DocuSign Envelope ID: 626CD160-B6FC-448D-AF8E-C4C67AFEDAD3

GO2-23-105
Attachment 4

Columbia Generating Station
Final Safety Analysis Report
Amendment 67, Publicly Available

GENERAL TABLE OF CONTENTS

Chapter 1

INTRODUCTION AND GENERAL DESCRIPTION OF PLANT

1.1 Introduction
1.2 General Plant Description
1.3 Comparison Tables
1.4 Identification of Agents and Contractors
1.5 Requirements for Further Technical Information
1.6 Material Incorporated by Reference
1.7 Acronyms
1.8 Conformance to NRC Regulatory Guides

Chapter 2

SITE CHARACTERISTICS

2.1 Geography and Demography
2.2 Nearby Industrial, Transportation, and Military Facilities
2.3 Meteorology
2.4 Hydrology Engineering
2.5 Geology, Seismology, and Geotechnical Engineering

Chapter 3

DESIGN CRITERIA - STRUCTURES, COMPONENTS, EQUIPMENT, AND SYSTEMS

3.1 Conformance with NRC General Design Criteria
3.2 Classification of Structures, Components, and Systems
3.3 Wind and Tornado Loadings
3.4 Water Level (Flood) Design
3.5 Missile Protection
3.6 Protection Against Dynamic Effects Associated with the Postulated Rupture of Piping
3.7 Seismic Design
3.8 Design of Seismic Category I Structures
3.9 Mechanical Systems and Components
3.10 Seismic and Dynamic Qualification of Safety-Related Instrumentation and Electrical Equipment
3.11 Environmental Design of Mechanical and Electrical Equipment
3.12 Computer Programs for Structural Analysis and Design
3A Plant Design Assessment Report (DAR) for SRV and LOCA Loads

GENERAL TABLE OF CONTENTS

Chapter 4

REACTOR

4.1 Summary Description
4.2 Fuel System Design
4.3 Nuclear Design
4.4 Thermal-Hydraulic Design
4.5 Reactor Materials
4.6 Functional Design of Reactivity Control Systems

Chapter 5

REACTOR COOLANT SYSTEMS AND CONNECTED SYSTEMS

5.1 Summary Description
5.2 Integrity of Reactor Coolant Pressure Boundary
5.3 Reactor Vessel
5.4 Component and Subsystem Design

Chapter 6

ENGINEERED SAFETY FEATURES

6.1 Engineered Safety Feature Materials
6.2 Containment Systems
6.3 Emergency Core Cooling System
6.4 Habitability Systems
6.5 Fission Product Removal and Control Systems
6.6 Inservice Inspection of ASME Code Class 2 and Class 3 Components
6.7 Main Steam Isolation Valve Leakage Control System

GENERAL TABLE OF CONTENTS (Continued)

Chapter 7

INSTRUMENTATION AND CONTROL SYSTEMS

7.1 Introduction
7.2 Reactor Protection (Trip) System
7.3 Engineered Safety Feature Systems
7.4 Systems Required for Safe Shutdown
7.5 Safety-Related Display Instrumentation
7.6 All Other Instrumentation Systems Required for Safety
7.7 Control Systems Not Required for Safety

Chapter 8

ELECTRIC POWER

8.1 Introduction
8.2 Offsite Power System
8.3 Onsite Power Systems
8A Station Blackout

Chapter 9

AUXILIARY SYSTEMS

9.1 Fuel Storage and Handling
9.2 Water Systems
9.3 Process Auxiliaries
9.4 Heating, Ventilating, and Air Conditioning Systems
9.5 Other Auxiliary Systems

Chapter 10

STEAM AND POWER CONVERSION SYSTEM

10.1 Summary Description
10.2 Turbine Generator
10.3 Main Steam Supply System
10.4 Other Features of Steam and Power Conversion System

GENERAL TABLE OF CONTENTS (Continued)

Chapter 11

RADIOACTIVE WASTE MANAGEMENT

11.1 Source Terms
11.2 Liquid Waste Management System
11.3 Gaseous Waste Management Systems
11.4 Solid Waste Management System
11.5 Process and Effluent Radiological Monitoring and Sampling Systems
11.6 Postaccident Sampling System

Chapter 12

RADIATION PROTECTION

12.1 Ensuring that Occupational Radiation Exposures and Radiation Exposures to Members of the Public are As Low As Is Reasonably Achievable
12.2 Radiation Sources
12.3 Radiation Protection Design Features
12.4 Dose Assessment
12.5 Radiation Protection Program

Chapter 13

CONDUCT OF OPERATIONS

13.1 Organization Structure
13.2 Training
13.3 Emergency Planning
13.4 Review and Audit
13.5 Plant Procedures
13.6 Industrial Security

Chapter 14

INITIAL TEST PROGRAM

14.1 Specific Information Included in Preliminary Safety Analysis Reports
14.2 System Lineup, Preoperational, and Initial Startup Test Program

GENERAL TABLE OF CONTENTS (Continued)

Chapter 15

ACCIDENT ANALYSES

15.0 General
15.1 Decrease in Reactor Coolant Temperature
15.2 Increase in Reactor Pressure
15.3 Decrease in Reactor Coolant System Flow Rate
15.4 Reactivity and Power Distribution Anomalies
15.5 Increase in Reactor Coolant Inventory
15.6 Decrease in Reactor Coolant Inventory
15.7 Radioactive Release from Subsystems and Components
15.8 Anticipated Transients without Scram

Chapter 16

TECHNICAL SPECIFICATIONS

(Separate Volume)

Chapter 17

QUALITY ASSURANCE

17.1 Quality Assurance During the Design and Construction Phases
17.2 Quality Assurance During the Operations Phase

APPENDIXES

A Supplement Aging Management Programs and Activities Credited for Columbia License Renewal
B Response to Regulatory Issues Resulting from TMI-2
F Fire Protection Evaluation
I Licensing Review Group Issues
J Shielding Evaluation Report

LIST OF EFFECTIVE PAGES

Page	Amendment
VOLUME I	
GENERAL TABLE OF CONTENTS	
i	58
ii	58
iii	58
iv	58
v	62
CHAPTER 1	
1-i	53
1-ii	62
1-iii	64
1-iv	64
1-v	63
1-vi	60
1-vii	53
1-viii	54
1-ix	57
Section 1.1	
1.1-1	64
Section 1.2	
1.2-1	53
1.2-2	53
1.2-3	53
1.2-4	59
1.2-5	59
1.2-6	59
1.2-7	59
1.2-8	59
1.2-9	59
1.2-10	58
1.2-11	58
1.2-12	58
1.2-13	66
1.2-14	58
1.2-15	59
1.2-16	58
1.2-17	63
1.2-18	59
1.2-19	59
1.2-20	62
1.2-21	65
1.2-22	59
1.2-23	59
1.2-24	64
1.2-25	64
1.2-26	64
1.2-27	64
1.2-28	64
1.2-29	64
1.2-30	64
1.2-31	64
1.2-32	64
1.2-33	59
1.2-34	65
1.2-35	59
1.2-36	60
1.2-37	60
1.2-38	60
1.2-39	53
1.2-40	53
1.2 Figures	
1.2-1	67
1.2-2.1	64
1.2-2.2	64
1.2-3.1	64
1.2-3.2	61
1.2-4.1	67
1.2-4.2	67
1.2-5	60
1.2-6	62
1.2-7	65
1.2-8	65
1.2-9	66
1.2-10	65
1.2-11	66
1.2-12	66
1.2-13	67
1.2-14	67
1.2-15	65
1.2-16	65
1.2-17.1	65
1.2-17.2	65
1.2-18	67
1.2-19	60
1.2-20	62
1.2-21	67
1.2-22	64
1.2-23	66
1.2-24	67
1.2-25	54
1.2-26	67
1.2-27	60
1.2-28.1	64
1.2-28.2	65
1.2-29.1	54
1.2-29.2	54
1.2-29.3	54
1.2-29.4	54
1.2-29.5	54
1.2-29.6	54
1.2-29.7	55
1.2-29.8	54
1.2-29.9	54
1.2-29.10	54
1.2-29.11	54
1.2-29.12	54
1.2-29.13	54
1.2-29.14	54
1.2-29.15	54
Section 1.3	
1.3-1	53
1.3-2	53
1.3-3	53
1.3-4	53
1.3-5	53
1.3-6	66
1.3-7	53
1.3-8	53
1.3-9	53
1.3-10	53
1.3-11	53
1.3-12	66
1.3-13	53
1.3-14	53
1.3-15	65
1.3-16	66
1.3-17	54
1.3-18	53

*Indicates blank page
**Indicates unnumbered page

LIST OF EFFECTIVE PAGES

Page	Amendment
1.3-19	54
1.3-20	53
1.3-21	53
1.3-22	53
1.3-23	54
1.3-24	67
1.3-25	61
Section 1.4	
1.4-1	57
1.4-2	57
1.4-3	63
1.4-4	63
1.4-5	53
1.4-6	54
Section 1.5	
1.5-1	54
1.5-2	54
1.5-3	56
1.5-4	54
1.5-5	54
1.5-6	54
1.5-7	53
1.5-8	53
1.5-9	53
1.5-10	54
1.5-11	53
Section 1.6	
1.6-1	53
*	
1.6-3	53
1.6-4	63
1.6-5	63
1.6-6	62
1.6-7	59
1.6-8	62
1.6-9	63
1.6-10	61
1.6-11	66
1.6-12	63
1.6-13	64
1.6-14	63
*	
Section 1.7	
1.7-1	62
1.7-2	62
1.7-3	62
1.7-4	62
1.7-5	64
1.7-6	64
1.7-7	64
1.7-8	64
1.7-9	62
1.7-10	63
1.7-11	62
1.7-12	62
1.7-13	62
Section 1.8	
1.8-1	54
1.8-2	59
1.8-3	53
1.8-4	53
1.8-5	59
1.8-6	59
1.8-7	59
1.8-8	59
1.8-9	59
1.8-10	65
1.8-11	59
1.8-12	59
1.8-13	65
1.8-14	65
1.8-15	59
1.8-16	59
1.8-17	65
1.8-18	65
1.8-19	59
1.8-20	59
1.8-21	59
1.8-22	59
1.8-23	59
1.8-24	59
1.8-25	59
1.8-26	59
1.8-27	59
1.8-28	59
1.8-29	59
1.8-30	59
1.8-31	59
1.8-32	61
1.8-33	62
1.8-34	61
1.8-35	59
1.8-36	59
1.8-37	63
1.8-38	63
1.8-39	63
**	
1.8-41	59
1.8-42	59
1.8-43	59
1.8-44	62
1.8-45	59
1.8-46	59
1.8-47	59
1.8-48	59
1.8-49	59
1.8-50	59
1.8-51	59
1.8-52	59
1.8-53	59
1.8-54	59
1.8-55	59
1.8-56	64
1.8-57	59
1.8-58	59
1.8-59	59
1.8-60	59
1.8-61	59
1.8-62	59
1.8-63	61
1.8-64	59
1.8-65	59
1.8-66	59
1.8-67	59
1.8-68	59
1.8-69	59
1.8-70	59
1.8-71	59
1.8-72	60
1.8-73	60
1.8-74	60

*Indicates blank page
**Indicates unnumbered page

LIST OF EFFECTIVE PAGES

Page	Amendment	Page	Amendment	Page	Amendment
1.8-75	60	1.8-122	61	1.8-169	60
1.8-76	62	1.8-123	63	1.8-170	60
1.8-77	60	1.8-124	*	1.8-171	60
1.8-78	60	1.8-125	61	1.8-172	64
1.8-79	60	1.8-126	61	1.8-173	60
1.8-80	60	1.8-127	61	1.8-174	60
1.8-81	60	1.8-128	64	1.8-175	60
1.8-82	60	1.8-129	61	1.8-176	60
1.8-83	60	1.8-130	61	1.8-177	60
1.8-84	60	1.8-131	61	1.8-178	60
1.8-85	60	1.8-132	64	1.8-179	60
1.8-86	60	1.8-133	60	1.8-180	60
1.8-87	60	1.8-134	60	1.8-181	*65
1.8-88	60	1.8-135	60	1.8-182	60
1.8-89	67	1.8-136	60	1.8-183	60
1.8-90	65	1.8-137	60	1.8-184	60
1.8-91	60	1.8-138	60	1.8-185	60
1.8-92	60	1.8-139	60	1.8-186	60
1.8-93	60	1.8-140	60	1.8-187	60
1.8-94	60	1.8-141	60	1.8-188	60
1.8-95	60	1.8-142	60	1.8-189	60
1.8-96	60	1.8-143	60	1.8-190	60
1.8-97	60	1.8-144	60	1.8-191	60
1.8-98	60	1.8-145	60	1.8-192	60
1.8-99	60	1.8-146	60	1.8-193	60
1.8-100	64	1.8-147	60	1.8-194	60
1.8-101	60	1.8-148	60	1.8-195	60
1.8-102	60	1.8-149	60	1.8-196	60
1.8-103	60	1.8-150	60	1.8-197	60
1.8-104	63	1.8-151	60	1.8-198	60
1.8-105	60	1.8-152	60	1.8-199	60
1.8-106	60	1.8-153	60	1.8-200	60
1.8-107	60	1.8-154	60	1.8-201	60
1.8-108	60	1.8-155	60	1.8-202	60
1.8-109	60	1.8-156	60	1.8-203	60
1.8-110	60	1.8-157	60	1.8-204	60
1.8-111	60	1.8-158	60	1.8-205	60
1.8-112	60	1.8-159	60	1.8-206	60
1.8-113	60	1.8-160	60	1.8-207	63
1.8-114	60	1.8-161	60	1.8-208	60
1.8-115	60	1.8-162	60	1.8-209	60
1.8-116	60	1.8-163	60	1.8-210	65
1.8-117	60	1.8-164	60	1.8-211	65
1.8-118	60	1.8-165	62		
1.8-119	60	1.8-166	60		
1.8-120	60	1.8-167	60		
1.8-121	60	1.8-168	60		

*Indicates blank page
**Indicates unnumbered page

LIST OF EFFECTIVE PAGES

Page	Amendment
VOLUME II	
CHAPTER 2	
2-i	61
2-ii	61
2-iii	61
2-iv	61
2-v	58
2-vi	58
2-vii	58
2-viii	63
2-ix	63
2-x	58
2-xi	58
2-xii	58
2-xiii	58
2-xiv	58
Section 2.1	
2.1-1	57
2.1-2	63
2.1-3	66
2.1-4	64
2.1-5	64
2.1-6	64
2.1-7	64
2.1-8	**
2.1-9	57
2.1-10	57
2.1-11	57
2.1-12	63
2.1 Figures	
2.1-1	55
2.1-2	55
2.1-3	57
2.1-4	55
2.1-5	55
2.1-6	63
2.1-7	53
Section 2.2	
2.2-1	60
2.2-2	57
2.2-3	65
2.2-4	64
2.2-5	64
2.2-6	64
2.2-7	61
2.2-8	65
2.2-9	61
2.2-10	64
2.2-11	64
2.2-12	64
2.2-13	62
2.2-14	61
2.2-15	61
2.2-16	61
2.2 Figures	
2.2-1	55
2.2-2	55
2.2-3	57
Section 2.3	
2.3-1	53
2.3-2	53
2.3-3	53
2.3-4	53
2.3-5	53
2.3-6	53
2.3-7	65
2.3-8	53
2.3-9	53
2.3-10	53
2.3-11	53
2.3-12	53
2.3-13	53
2.3-14	54
2.3-15	53
2.3-16	57
2.3-17	57
2.3-18	57
2.3-19	57
2.3-20	57
2.3-21	57
2.3-22	57
2.3-23	57
2.3-24	54
2.3-25	53
2.3-26	57
2.3-27	57
2.3-28	53
2.3-29	59
2.3-30	61
2.3-31	62
2.3-32	59
2.3-33	59
2.3-34	59
2.3-35	59
2.3-36	59
2.3-37	59
2.3-38	59
2.3-39	59
2.3-40	59
2.3-41	59
*	
2.3-43	53
2.3-44	53
2.3-45	53
2.3-46	53
2.3-47	53
2.3-48	53
2.3-49	53
2.3-50	53
2.3-51	53
2.3-52	53
2.3-53	53
2.3-54	53
2.3-55	53
2.3-56	53
2.3-57	53
2.3-58	53
2.3-59	53
2.3-60	53
2.3-61	53
2.3-62	53
2.3-63	53
2.3-64	53
2.3-65	53
2.3-66	53
2.3-67	53

*Indicates blank page
**Indicates unnumbered page

LIST OF EFFECTIVE PAGES

Page	Amendment
2.3-68	53
2.3-69	53
2.3-70	53
2.3-71	53
2.3-72	53
2.3-73	53
2.3-74	53
2.3-75	53
2.3-76	53
2.3-77	53
2.3-78	53
2.3-79	53
2.3-80	53
2.3-81	53
2.3-82	54
2.3-83	54
2.3-84	54
2.3-85	53
2.3-86	53
2.3-87	53
2.3-88	53
2.3-89	53
2.3-90	53
2.3-91	57
2.3-92	53
2.3-93	53
2.3-94	53
2.3-95	53
2.3-96	59
2.3-97	59
2.3-98	59
2.3-99	59
2.3-100	62
2.3-101	62
2.3-102	62
2.3-103	62
2.3-104	53
2.3-105	59
2.3-106	59
2.3-107	59
2.3-108	59
2.3-109	59
2.3-110	59
2.3-111	59
2.3-112	53
2.3-113	53
2.3-114	53
2.3-115	53
2.3-116	53
2.3-117	53
2.3-118	53
2.3-119	53
2.3-120	53
2.3-121	53
2.3 Figures	
2.3-1	55
2.3-2	55
2.3-3	53
2.3-4	55
2.3-5	55
2.3-6	55
2.3-7.1	55
2.3-7.2	55
2.3-7.3	55
2.3-8.1	55
2.3-8.2	55
2.3-8.3	55
2.3-8.4	55
2.3-9	55
2.3-10	55
2.3-11	55
2.3-12	55
2.3-13	55
2.3-14	55
2.3-15	55
Section 2.4	
2.4-1	57
2.4-2	53
2.4-3	57
2.4-4	57
2.4-5	58
2.4-6	63
2.4-7	62
2.4-8	58
2.4-9	62
2.4-10	58
2.4-11	58
2.4-12	58
2.4-13	58
2.4-14	58
2.4-15	58
2.4-16	58
2.4-17	58
2.4-18	58
2.4-19	58
2.4-20	58
2.4-21	58
2.4-22	58
2.4-23	58
2.4-24	58
2.4-25	58
2.4-26	57
2.4-27	57
2.4-28	57
2.4-29	63
2.4-30	57
2.4-31	57
2.4-32	57
2.4-33	57
2.4-34	57
2.4-35	53
2.4-36	53
2.4-37	55
2.4-38	53
2.4-39	53
2.4-40	53
2.4 Figures	
2.4-1	55
2.4-2	53
2.4-3	53
2.4-4	55
2.4-5	55
2.4-6.1	67
2.4-6.2	60
2.4-6.3	59
2.4-6.4	64
2.4-6.5	61
2.4-7	55
2.4-8	53
2.4-9	57
2.4-10	55
2.4-11	55
2.4-12	55
2.4-13	55
2.4-14	55

*Indicates blank page
**Indicates unnumbered page

LIST OF EFFECTIVE PAGES

Page	Amendment
2.4-15	55
2.4-16	55
2.4-17	53
2.4-18	57
2.4-19	53
2.4-20	53
2.4-21	53
2.4-22	59
2.4-23	53
2.4-24	53
2.4-25	53
2.4-26	53
2.4-27.1	55
2.4-27.2	55
2.4-28	57
Section 2.5	
2.5-1	58
VOLUME IX	
CHAPTER 3	
3-i	53
3-ii	67
3-iii	67
3-iv	54
3-v	59
3-vi	59
3-vii	57
3-viii	57
3-ix	57
3-x	57
3-xi	57
3-xii	57
3-xiii	54
3-xiv	57
3-xv	54
3-xvi	54
3-xvii	54
3-xviii	54
3-xix	57
3-xx	58
3-xxi	54
3-xxii	54
3-xxiii	54
3-xxiv	54
3-xxv	56
3-xxvi	54
3-xxvii	58
3-xxviii	58
3-xxix	54
3-xxx	54
3-xxxi	65
3-xxxii	65
3-xxxiii	59
3-xxxiv	57
3-xxxv	54
3-xxxvi	54
3-xxxvii	66
3-xxxviii	57
3-xxxix	57
3-xl	58
3-xli	54
3-xlii	64
3-xliii	64
3-xliv	67
3-xlv	65
3-xlvi	65
3-xlvii	57
3-xlviii	54
3-xlix	54
3-l	66
3-li	57
3-lii	54
3-liii	54
3-liv	54
3-lv	54
3-lvi	54
3-lvii	57
Section 3.1	
3.1-1	54
3.1-2	54
3.1-3	54
3.1-4	54
3.1-5	54
3.1-6	54
3.1-7	53
3.1-8	53
3.1-9	53
3.1-10	53
3.1-11	53
3.1-12	53
3.1-13	53
3.1-14	53
3.1-15	53
3.1-16	53
3.1-17	53
3.1-18	53
3.1-19	53
3.1-20	53
3.1-21	55
3.1-22	53
3.1-23	54
3.1-24	53
3.1-25	53
3.1-26	53
3.1-27	53
3.1-28	53
3.1-29	53
3.1-30	53
3.1-31	53
3.1-32	53
3.1-33	53
3.1-34	53
3.1-35	53
3.1-36	65
3.1-37	53
3.1-38	58
3.1-39	58
3.1-40	61
3.1-41	58
3.1-42	58
3.1-43	58
3.1-44	58
3.1-45	58
3.1-46	58
3.1-47	58
3.1-48	58
3.1-49	58
3.1-50	67
3.1-51	67
3.1-52	67
3.1-53	67
3.1-54	67
3.1-55	67
3.1-56	67
3.1-57	67

*Indicates blank page
**Indicates unnumbered page

LIST OF EFFECTIVE PAGES

Page	Amendment
3.1-58	67
3.1-59	67
3.1-60	67
3.1-61	67
3.1-62	67
3.1-63	67
3.1-64	67
3.1-65	67
Section 3.2	
3.2-1	60
3.2-2	65
3.2-3	65
3.2-4	65
3.2-5	60
3.2-6	64
3.2-7	65
*	
3.2-9	54
3.2-10	64
3.2-11	57
3.2-12	62
3.2-13	59
3.2-14	63
3.2-15	66
3.2-16	62
3.2-17	59
3.2-18	60
3.2-19	59
3.2-20	59
3.2-21	59
3.2-22	60
3.2-23	64
3.2-23a	64
3.2-24	65
3.2-25	59
3.2-26	59
3.2-27	59
3.2-28	59
3.2-29	63
3.2-30	59
3.2-31	60
3.2-32	65
3.2-33	59
3.2-34	59
3.2-35	59
3.2-36	59
3.2-37	59
3.2-38	59
3.2-39	59
3.2-40	59
3.2-41	59
3.2-42	59
3.2-43	59
3.2-44	59
3.2-45	59
3.2-46	59
3.2-47	59
3.2-48	59
3.2-49	59
3.2-50	59
3.2-51	59
3.2-52	59
3.2-53	59
3.2-54	59
3.2-55	59
3.2-56	59
3.2-57	59
3.2-58	59
3.2-59	59
3.2-60	59
3.2-61	59
3.2-62	59
3.2-63	59
3.2-64	59
3.2-65	59
3.2 Figures	
3.2-1	54
3.2-2	65
3.2-3	66
3.2-4	65
3.2-5	65
3.2-6	65
3.2-7	67
Section 3.3	
3.3-1	53
3.3-2	53
3.3-3	65
3.3-4	53
3.3-5	60
3.3-6	64
3.3-7	64
3.3-8	64
Section 3.4	
3.4-1	62
3.4-2	62
3.4-3	54
3.4-4	57
3.4-5	57
3.4-6	58
3.4-7	58
3.4-8	58
Section 3.5	
3.5-1	53
3.5-2	53
3.5-3	53
3.5-4	53
3.5-5	53
3.5-6	53
3.5-7	53
3.5-8	54
3.5-9	54
3.5-10	64
3.5-11	53
3.5-12	53
3.5-13	54
3.5-14	59
3.5-15	59
3.5-16	65
3.5-17	65
3.5-18	59
3.5-19	63
3.5-20	59
3.5-21	61
3.5-22	65
3.5-23	62
3.5-24	59
3.5-25	65
3.5-26	64
3.5-27	65
3.5-28	64
3.5-29	59

*Indicates blank page
**Indicates unnumbered page

LIST OF EFFECTIVE PAGES

Page	Amendment
3.5-30	59
3.5-31	65
*	
3.5-33	59
3.5-34	66
3.5-35	66
3.5-36	66
3.5-37	59
3.5-38	66
3.5-39	59
3.5-40	61
3.5-41	59
3.5-42	64
3.5-43	59
3.5-44	59
3.5-45	59
3.5-46	59
3.5 Figures	
3.5-1	66
3.5-2	63
3.5-3	53
3.5-4	65
3.5-5	65
3.5-6	60
3.5-7	59
3.5-8	62
3.5-9	62
3.5-10	65
3.5-11	66
3.5-12	60
3.5-13	66
3.5-14	67
3.5-15	63
3.5-16	64
3.5-17	64
3.5-18	64
3.5-19	64
3.5-20	64
3.5-21	64
3.5-22	64
3.5-23	64
3.5-24	64
3.5-25	64
3.5-26	64
3.5-27	64
3.5-28	64
3.5-29	53
3.5-30	53
3.5-31	64
3.5-32	53
3.5-33	55
3.5-34	55
3.5-35	55
3.5-36	67
3.5-37	64
3.5-38	65
3.5-39	58
3.5-40	53
3.5-41	53
3.5-42	63
3.5-43	58
3.5-44	59
3.5-45	66
3.5-46	64
3.5-47	64
3.5-48	53
3.5-49	63
3.5-50	65
VOLUME X	
Section 3.6	
3.6-1	67
3.6-2	57
3.6-3	57
3.6-4	57
3.6-5	57
3.6-6	57
3.6-7	57
3.6-8	57
3.6-9	57
3.6-10	57
3.6-11	57
3.6-12	57
3.6-13	57
3.6-14	57
3.6-15	57
3.6-16	57
3.6-17	57
3.6-18	67
3.6-19	57
3.6-20	65
3.6-21	65
3.6-22	57
3.6-23	57
3.6-24	57
3.6-25	57
3.6-26	57
3.6-27	65
3.6-28	65
3.6-29	67
3.6-30	65
3.6-31	57
3.6-32	57
3.6-33	66
3.6-34	57
3.6-35	64
3.6-36	57
3.6-37	57
3.6-38	57
3.6-39	57
3.6-40	57
3.6-41	57
3.6-42	57
3.6-43	57
3.6-44	65
3.6-45	57
3.6-46	57
3.6-47	57
3.6-48	57
3.6-49	57
3.6-50	65
3.6-51	57
3.6-52	57
3.6-53	57
3.6-54	57
3.6-55	57
3.6-56	57
3.6-57	57
3.6-58	57
3.6-59	57
3.6-60	57
3.6-61	57
3.6-62	57
3.6-63	57
3.6-64	57
3.6-65	57
3.6-66	57

*Indicates blank page
**Indicates unnumbered page

LIST OF EFFECTIVE PAGES

Page	Amendment	Page	Amendment	Page	Amendment
3.6-67	57	3.6-9	62	3.6-37.1	57
3.6-68	57	3.6-10	67	3.6-37.2	67
3.6-69	57	3.6-11	66	3.6-38.1	57
3.6-70	57	3.6-12	62	3.6-38.2	62
3.6-71	57	3.6-13	64	3.6-38.3	57
3.6-72	57	3.6-14	57	3.6-38.4	65
3.6-73	57	3.6-15	65	3.6-38.5	65
3.6-74	66	3.6-16	64	3.6-39.1	59
3.6-75	66	3.6-17	64	3.6-39.2	57
3.6-76	66	3.6-18	64	3.6-39.3	57
3.6-77	65	3.6-19	64	3.6-40.1	57
3.6-78	57	3.6-20	64	3.6-40.2	67
3.6-79	67	3.6-20A	67	3.6-41.1	57
3.6-80	67	3.6-20B	65	3.6-41.2	67
3.6-81	67	3.6-21	53	3.6-42.1	57
3.6-82	57	3.6-22.1	55	3.6-42.2	67
3.6-83	65	3.6-22.2	53	3.6-43.1	57
3.6-84	57	3.6-22.3	53	3.6-43.2	57
3.6-85	57	3.6-22.4	55	3.6-44.1	57
3.6-86	57	3.6-22.5	55	3.6-44.2	57
3.6-87	57	3.6-23.1	55	3.6-45.1	57
3.6-88	66	3.6-23.2	55	3.6-45.2	57
3.6-89	66	3.6-23.3	55	3.6-46.1	57
3.6-90	57	3.6-23.4	55	3.6-46.2	67
3.6-91	57	3.6-23.5	55	3.6-47.1	57
3.6-92	67	3.6-23.6	53	3.6-47.2	67
3.6-93	67	3.6-24.1	55	3.6-48.1	57
3.6-93A	67	3.6-24.2	55	3.6-48.2	57
3.6-94	57	3.6-24.3	57	3.6-49.1	61
3.6-95	57	3.6-24.4	55	3.6-49.2	57
3.6-96	57	3.6-25	55	3.6-50.1	57
3.6-97	57	3.6-26	53	3.6-50.2	67
3.6-98	57	3.6-27	55	3.6-50.3	67
3.6-99	57	3.6-28	53	3.6-51.1	61
3.6-100	57	3.6-29	55	3.6-51.2	57
3.6-101	57	3.6-30	53	3.6-51.3	57
		3.6-31	55	3.6-52.1	57
3.6 Figures		3.6-32.1	57	3.6-52.2	57
		3.6-32.2	67	3.6-53.1	57
3.6-1	59	3.6-33.1	57	3.6-53.2	57
3.6-2	65	3.6-33.2	57	3.6-54.1	61
3.6-3	59	3.6-34.1	57	3.6-54.2	57
3.6-4	57	3.6-34.2	57	3.6-55.1	57
3.6-5	62	3.6-35.1	57	3.6-55.2	57
3.6-6	67	3.6-35.2	57	3.6-56.1	57
3.6-7	67	3.6-36.1	57	3.6-56.2	57
3.6-8	62	3.6-36.2	67	3.6-57.1	55

*Indicates blank page
**Indicates unnumbered page

LIST OF EFFECTIVE PAGES

Page	Amendment
3.6-57.2	55
3.6-57.3	55
3.6-58	53
3.6-59	53
3.6-60.1	53
3.6-60.2	57
3.6-61	55
3.6-62	55
3.6-63	57
3.6-64	55
3.6-65	55
3.6-66	55
3.6-67	55
3.6-68	53
3.6-69	53
3.6-70	53
3.6-71	53
3.6-72	53
3.6-73	53
3.6-74	53
3.6-75	53
3.6-76	55
3.6-77	53
3.6-78	53
3.6-79	53
3.6-80	53
3.6-81	53
3.6-82	57
3.6-83	53
3.6-84	53
3.6-85	55
3.6-86	60
3.6-87	55
3.6-88	55
3.6-89	53
3.6-90	53
3.6-91	53
3.6-92.1	55
3.6-92.2	55
3.6-92.3	55
3.6-93	57
3.6-94.1	55
3.6-94.2	55
3.6-95	55
3.6-96	53
3.6-97	53
3.6-98	53
3.6-99	53
3.6-100	53
3.6-101	66
3.6-102	66
3.6-103	66
3.6-104	53
3.6-105	53
3.6-106	56

VOLUME XI

Section 3.7

Page	Amendment
3.7-1	59
3.7-2	53
3.7-3	53
3.7-4	53
3.7-5	53
3.7-6	53
3.7-7	53
3.7-8	53
3.7-9	53
3.7-10	53
3.7-11	53
3.7-12	53
3.7-13	53
3.7-14	53
3.7-15	53
3.7-16	53
3.7-17	53
3.7-18	53
3.7-19	53
3.7-20	53
3.7-21	53
3.7-22	53
3.7-23	53
3.7-24	53
3.7-25	53
3.7-26	53
3.7-27	53
3.7-28	53
3.7-29	55
3.7-30	67
3.7-31	55
3.7-32	55
3.7-33	61
3.7-34	65
3.7-35	53
3.7-36	64
3.7-37	65
3.7-38	65
3.7-39	63
3.7-40	53
3.7-41	53
3.7-42	53
3.7-43	53
3.7-44	53
3.7-45	53
3.7-46	53
3.7-47	53
3.7-48	53
3.7-49	53
3.7-50	53
3.7-51	53
3.7-52	53
3.7-53	53
3.7-54	53
3.7-55	53
3.7-56	53
3.7-57	53
3.7-58	54
3.7-59	53
3.7-60	53
3.7-61	53
3.7-62	53

3.7 Figures

Page	Amendment
3.7-1	53
3.7-2	53
3.7-3	55
3.7-4	55
3.7-5	55
3.7-6	64
3.7-7	55
3.7-8	55
3.7-9	55
3.7-10	55
3.7-11	55
3.7-12	55
3.7-13.1	55
3.7-13.2	55
3.7-14	53
3.7-15	55

*Indicates blank page
**Indicates unnumbered page

LIST OF EFFECTIVE PAGES

Page	Amendment
3.7-16	55
3.7-17	55
3.7-18	57
3.7-19	55
3.7-20	55
3.7-21	55
3.7-22	53
Section 3.8	
3.8-1	59
3.8-2	53
3.8-3	59
3.8-4	53
3.8-5	53
3.8-6	53
3.8-7	53
3.8-8	53
3.8-9	53
3.8-10	53
3.8-11	53
3.8-12	53
3.8-13	58
3.8-14	57
3.8-15	54
3.8-16	59
3.8-17	54
3.8-18	54
3.8-19	54
3.8-20	54
3.8-21	54
3.8-22	54
3.8-23	54
3.8-24	54
3.8-25	54
3.8-26	54
3.8-27	54
3.8-28	54
3.8-29	54
3.8-30	54
3.8-31	54
3.8-32	54
3.8-33	54
3.8-34	54
3.8-35	54
3.8-36	54
3.8-37	54
3.8-38	54
3.8-39	64
3.8-40	54
3.8-41	64
3.8-42	54
3.8-43	54
3.8-44	54
3.8-45	54
3.8-46	54
3.8-47	64
3.8-48	64
3.8-49	54
3.8-50	54
3.8-51	64
3.8-52	54
3.8-53	54
3.8-54	54
3.8-55	54
3.8-56	54
3.8-57	57
3.8-58	54
3.8-59	54
3.8-60	54
3.8-61	54
3.8-62	54
3.8-63	54
3.8-64	54
3.8-65	54
3.8-66	54
3.8-67	54
3.8-68	54
3.8-69	54
3.8-70	54
3.8-71	54
3.8-72	54
3.8-73	54
3.8-74	55
3.8-75	54
3.8-76	67
3.8-77	54
3.8-78	54
3.8-79	57
3.8-80	57
3.8-81	54
3.8-82	57
3.8-83	57
3.8-84	57
3.8-85	54
3.8-86	57
3.8-87	57
3.8-88	59
3.8-89	57
3.8-90	62
3.8-91	57
3.8-92	54
3.8-93	54
3.8-94	54
3.8-95	54
3.8-96	54
3.8-97	54
3.8-98	54
3.8-99	54
3.8-100	54
3.8-101	54
3.8-102	58
3.8-103	58
3.8-104	58
3.8-105	58
3.8-106	58
3.8-107	58
3.8-108	63
3.8-109	57
3.8-110	57
3.8-111	57
3.8-112	57
3.8-113	57
3.8-114	57
3.8-115	57
3.8-116	57
3.8-117	57
3.8-118	57
3.8-119	57
3.8-120	57
3.8-121	57
3.8-122	57
3.8-123	57
3.8-124	57
3.8-125	57
3.8-126	58
3.8-127	58
3.8-128	58
3.8-129	58
3.8-130	58
3.8-131	58

*Indicates blank page
**Indicates unnumbered page

LIST OF EFFECTIVE PAGES

Page	Amendment
3.8-132	58
3.8-133	58
3.8-134	58
3.8-135	53
3.8-136	53
3.8-137	53
3.8-138	53
3.8-139	53
3.8-140	53
3.8-141	53
*	
3.8-143	53
3.8-144	54
3.8-145	53
3.8-146	53
3.8-147	53
3.8-148	53
3.8-149	59
3.8-150	59
3.8-151	65
3.8-152	53
3.8-153	53
3.8-154	53
3.8-155	53
3.8-156	53
3.8-157	53
3.8-158	53
3.8-159	53
3.8-160	53
3.8-161	53
3.8-162	53
3.8-163	53
3.8-164	53
3.8-165	53
3.8-166	53
3.8-167	67
3.8-168	53
3.8 Figures	
3.8-1	55
3.8-2	57
3.8-3	55
3.8-4.1	55
3.8-4.2	55
3.8-5	55
3.8-6	55
3.8-7	53
3.8-8	53
3.8-9	54
3.8-10	55
3.8-11	53
3.8-12	53
3.8-13	55
3.8-14	57
3.8-15	55
3.8-16	57
3.8-17	53
3.8-18	53
3.8-19	55
3.8-20	61
3.8-21	60
3.8-22	65
3.8-23	57
3.8-24	53
3.8-25	55
3.8-26	57
3.8-27	65
3.8-28	65
3.8-29	53
3.8-30	53
3.8-31	53
3.8-32	53
3.8-33	60
3.8-34	53
3.8-35	53
3.8-36	53
3.8-37	53
3.8-38	66
3.8-39	65
3.8-40	53
3.8-41	65
3.8-42	57
3.8-43	61
3.8-44	55
3.8-45	60
3.8-46	53
3.8-47	62
3.8-48	63
3.8-49	53
3.8-50	55
3.8-51	65
3.8-52	60
3.8-53	60
3.8-54	55
3.8-55	55
3.8-56	55
3.8-57	55
3.8-58	55
3.8-59	55
3.8-60	57
3.8-61	53
3.8-62	55
VOLUME XII	
Section 3.9	
3.9-1	67
3.9-2	67
3.9-3	67
3.9-4	67
3.9-5	67
3.9-6	67
3.9-7	67
3.9-8	53
3.9-9	67
3.9-10	67
3.9-11	53
3.9-12	53
3.9-13	53
3.9-14	53
3.9-15	66
3.9-16	53
3.9-17	53
3.9-18	53
3.9-19	53
3.9-20	53
3.9-21	54
3.9-22	54
3.9-23	53
3.9-24	53
3.9-25	58
3.9-26	55
3.9-27	53
3.9-28	53
3.9-29	53
3.9-30	56
3.9-31	56
3.9-32	53
3.9-33	64

*Indicates blank page
**Indicates unnumbered page

LIST OF EFFECTIVE PAGES

Page	Amendment	Page	Amendment	Page	Amendment
3.9-34	58	3.9-81	56	3.9-128	57
3.9-35	56	3.9-82	56	3.9-129	57
3.9-36	56	3.9-83	53	3.9-130	67
3.9-37	56	3.9-84	53	3.9-131	57
3.9-38	53	3.9-85	67	3.9-132	57
3.9-39	53	3.9-86	67	3.9-133	57
3.9-40	53	3.9-87	67	3.9-134	57
3.9-41	53	3.9-88	67	3.9-135	57
3.9-42	53	3.9-89	53	3.9-136	57
3.9-43	53	3.9-90	56	3.9-137	57
3.9-44	53	3.9-91	53	3.9-138	57
3.9-45	54	3.9-92	53	3.9-139	57
3.9-46	66	3.9-93	67	3.9-140	57
3.9-47	54	3.9-94	66	3.9-141	57
3.9-48	54	3.9-95	67	3.9-142	57
3.9-49	54	3.9-96	67	3.9-143	57
3.9-50	60	3.9-97	53	3.9-144	57
3.9-51	54	3.9-98	53	3.9-145	57
3.9-52	54	3.9-99	67	3.9-146	57
3.9-53	54	3.9-100	67	3.9-147	57
3.9-54	54	3.9-101	67	3.9-148	57
3.9-55	54	3.9-102	53	3.9-149	57
3.9-56	54	3.9-103	56	3.9-150	57
3.9-57	54	3.9-104	56	3.9-151	57
3.9-58	64	3.9-105	67	3.9-152	57
3.9-59	64	3.9-106	56	3.9-153	57
3.9-60	54	3.9-107	57	3.9-154	57
3.9-61	54	3.9-108	57	3.9-155	57
3.9-62	54	3.9-109	57	3.9-156	57
3.9-63	66	3.9-110	57	3.9-157	57
3.9-64	58	3.9-111	57	3.9-158	57
3.9-65	53	3.9-112	57	3.9-159	57
3.9-66	58	3.9-113	67	3.9-160	57
3.9-67	58	3.9-114	67	3.9-161	57
3.9-68	58	3.9-115	57	3.9-162	57
3.9-69	58	3.9-116	57	3.9-163	57
3.9-70	58	3.9-117	57	3.9-164	57
3.9-71	66	3.9-118	57	3.9-165	57
3.9-72	58	3.9-119	57	3.9-166	57
3.9-73	58	3.9-120	57	3.9-167	57
3.9-74	67	3.9-121	57	3.9-168	57
3.9-75	63	3.9-122	57	3.9-169	57
3.9-76	63	3.9-123	57	3.9-170	57
3.9-77	67	3.9-124	57	3.9-171	57
3.9-78	53	3.9-125	57	3.9-172	57
3.9-79	66	3.9-126	57		
3.9-80	57	3.9-127	67		

*Indicates blank page
**Indicates unnumbered page

LIST OF EFFECTIVE PAGES

Page	Amendment
3.9 Figures	
3.9-1	55
3.9-2	55
3.9-3	57
3.9-4	58
3.9-5	55
Section 3.10	
3.10-1	54
3.10-2	54
3.10-3	53
3.10-4	53
3.10-5	61
3.10-6	61
3.10-7	53
3.10-8	53
3.10-9	53
3.10-10	54
3.10-11	53
3.10-12	53
3.10-13	53
3.10-14	53
3.10-15	54
3.10-16	58
3.10-17	60
3.10-18	56
3.10 Figures	
3.10-1	55
3.10-2	55
3.10-3	55
3.10-4	55
Appendix 3.10A	
3.10A-1	53
3.10A-2	53
3.10A-3	53
3.10A-4	53
3.10A-5	53
Appendix 3.10B	
3.10B-1	57
3.10B-2	57
3.10B-3	53
3.10B-4	53
3.10B-5	53
3.10B-6	53
3.10B-7	53
3.10B-8	53
3.10B-9	53
3.10B-10	53
3.10B-11	53
3.10B-12	53
3.10B Figures	
3.10B-1	57
Appendix 3.10C	
3.10C-1	57
3.10C-2	53
3.10C-3	53
3.10C-4	53
3.10C Figures	
3.10C-1	55
3.10C-2	55
3.10C-3	55
3.10C-4	55
3.10C-5	55
Section 3.11	
3.11-1	53
3.11-2	67
3.11-3	54
3.11-4	53
3.11-5	67
3.11-6	67
3.11-7	67
3.11-8	67
3.11-9	67
3.11-10	67
3.11-11	67
*	
3.11-13	61
3.11-14	61
3.11-15	61
3.11-16	62
3.11-17	66
3.11-18	55
3.11-19	55
3.11-20	55
3.11-21	55
3.11-22	55
3.11 Figures	
3.11-1	55
3.11-2	55
Section 3.12	
3.12-1	65
3.12-2	60
3.12-3	60
3.12-4	60
3.12-5	66
3.12-6	53
3.12-7	66
3.12-8	53
3.12-9	53
3.12-10	55
3.12-11	53
3.12-12	53
3.12-13	53
3.12-14	65
3.12-15	65
3.12-16	60
3.12-17	60
3.12-18	60
3.12-19	60
3.12-20	60
3.12-21	60
3.12-22	65
3.12-23	53
3.12-24	53
3.12-25	53
3.12-26	53
3.12-27	53
3.12-28	53

*Indicates blank page
**Indicates unnumbered page

LIST OF EFFECTIVE PAGES

Page	Amendment
3.12-29	53
3.12-30	53
3.12-31	53
3.12-32	53
3.12 Figures	
3.12-1	55
3.12-2	57
3.12-3	57
3.12-4	55
Appendix 3A	
3A-i	53
3A-ii	53
3A-iii	57
3A-iv	53
3A-v	53
3A-vi	53
3A-vii	53
3A-viii	53
3A-ix	53
3A-x	54
3A-xi	53
3A-xii	64
3A-xiii	53
3A-xiv	53
3A-xv	53
3A-xvi	53
3A-xvii	53
3A-xviii	53
3A-xix	53
Section 3A.1.1	
3A.1.1-1	63
Section 3A.1.2	
3A.1.2-1	53
Section 3A.1.3	
3A.1.3-1	53
Section 3A.1.4	
3A.1.4-1	53
3A.1.4-2	53
Section 3A.2.1	
3A.2.1-1	64
3A.2.1-2	64
3A.2.1-3	64
3A.2.1 Figures	
3A.2.1-1	53
3A.2.1-2	64
3A.2.1-3	64
3A.2.1-4	64
3A.2.1-5	64
3A.2.1-6	64
3A.2.1-7	64
3A.2.1-8	64
3A.2.1-9	60
Section 3A.2.2	
3A.2.2-1	53
*	
3A.2.2-3	53
3A.2.2-4	53
Section 3A.3.1	
3A.3.1-1	64
3A.3.1-2	54
3A.3.1-3	53
3A.3.1-4	53
3A.3.1-5	53
3A.3.1-6	53
3A.3.1-7	53
*	
3A.3.1-9	64
3A.3.1-10	53
3A.3.1 Figures	
3A.3.1-1	53
3A.3.1-2	53
3A.3.1-3	53
3A.3.1-4	53
3A.3.1-5	53
3A.3.1-6	53
3A.3.1-7	53
3A.3.1-8	55
3A.3.1-9	53
3A.3.1-10	53
3A.3.1-11a	53
3A.3.1-11b	55
Section 3A.3.2	
3A.3.2-1	64
3A.3.2-2	53
3A.3.2-3	54
3A.3.2-4	59
3A.3.2-5	54
3A.3.2-6	64
3A.3.2-7	53
3A.3.2-8	53
3A.3.2-9	64
3A.3.2-10	64
3A.3.2-11	53
3A.3.2-12	53
3A.3.2-13	53
3A.3.2-14	53
3A.3.2-15	64
3A.3.2-16	53
3A.3.2-17	53
3A.3.2-18	67
3A.3.2-19	53
3A.3.2-20	53
3A.3.2-21	53
*	
3A.3.2-23	53
3A.3.2-24	53
3A.3.2-25	53
3A.3.2-26	53
3A.3.2-27	53
3A.3.2-28	53
3A.3.2-29	53
3A.3.2-30	53
3A.3.2-31	53
3A.3.2-32	53

*Indicates blank page
**Indicates unnumbered page

LIST OF EFFECTIVE PAGES

Page	Amendment
3A.3.2 Figures	
3A.3.2-1	53
3A.3.2-2	53
3A.3.2-3	53
3A.3.2-4	53
3A.3.2-5	53
3A.3.2-6	53
3A.3.2-7	53
3A.3.2-8	53
3A.3.2-9	53
3A.3.2-10	53
3A.3.2-11	53
3A.3.2-12	53
3A.3.2-13	53
3A.3.2-14	53
3A.3.2-15	53
3A.3.2-16	53
3A.3.2-17	55
3A.3.2-18	53
3A.3.2-19	53
3A.3.2-20	53
3A.3.2-21	53
3A.3.2-22	53
3A.3.2-23	53
3A.3.2-24	53
3A.3.2-25	53
3A.3.2-26	53
3A.3.2-27	53
3A.3.2-28	54
Section 3A.3.3	
3A.3.3-1	53
*	
3A.3.3-3	53
Section 3A.3.4	
3A.3.4-1	53
Section 3A.3.5	
3A.3.5-1	53
3A.3.5-2	53
3A.3.5-3	53
3A.3.5-4	53
3A.3.5-5	53
3A.3.5-6	63
3A.3.5-7	54
3A.3.5-8	53
3A.3.5-9	53
3A.3.5-10	53
3A.3.5-11	53
3A.3.5-12	53
3A.3.5-13	53
3A.3.5-14	53
Section 3A.4.1	
3A.4.1-1	53
3A.4.1-2	53
3A.4.1-3	53
3A.4.1-4	53
3A.4.1-5	53
3A.4.1-6	53
3A.4.1-7	53
3A.4.1-8	53
3A.4.1-9	53
3A.4.1-10	55
Section 3A.4.2	
3A.4.2-1	53
3A.4.2-2	53
3A.4.2-3	53
3A.4.2-4	53
3A.4.2-5	53
3A.4.2-6	53
3A.4.2-7	53
3A.4.2-8	53
3A.4.2-9	59
3A.4.2-10	54
3A.4.2-11	53
3A.4.2-12	53
3A.4.2-13	53
3A.4.2-14	53
3A.4.2-15	53
3A.4.2-16	53
3A.4.2-17	53
3A.4.2-18	53
3A.4.2-19	53
3A.4.2-20	53
3A.4.2-21	53
3A.4.2-22	53
3A.4.2-23	53
3A.4.2-24	53
3A.4.2-25	53
3A.4.2-26	53
3A.4.2-27	53
3A.4.2-28	53
3A.4.2-29	53
3A.4.2-30	53
3A.4.2-31	53
3A.4.2-32	53
3A.4.1 Figures	
3A.4.1-1	53
3A.4.1-2	53
3A.4.1-3	53
3A.4.1-4	53
3A.4.1-5	61
3A.4.1-6	53
3A.4.2 Figures	
3A.4.2-1	53
3A.4.2-2	53
3A.4.2-3	53
3A.4.2-4	53
3A.4.2-5	53

*Indicates blank page
**Indicates unnumbered page

LIST OF EFFECTIVE PAGES

Page	Amendment
3A.4.2-6	53
3A.4.2-7	53
3A.4.2-8	53
Section 3A.4.3	
3A.4.3-1	53
3A.4.3-2	53
3A.4.3-3	53
3A.4.3-4	64
3A.4.3-5	53
3A.4.3-6	64
3A.4.3-7	64
3A.4.3 Figures	
3A.4.3-1	53
Section 3A.5.1	
3A.5.1-1	53
3A.5.1-2	53
3A.5.1-3	53
3A.5.1-4	53
3A.5.1-5	53
3A.5.1 Figures	
3A.5.1-1a	53
3A.5.1-1b	53
3A.5.1-2	53
3A.5.1-3a	57
3A.5.1-3b	57
3A.5.1-4a	57
3A.5.1-4b	57
3A.5.1-5a	57
3A.5.1-5b	57
3A.5.1-6a	57
3A.5.1-6b	57
3A.5.1-7a	57
3A.5.1-7b	57
3A.5.1-8a	57
3A.5.1-8b	57
3A.5.1-9a	57
3A.5.1-9b	57
3A.5.1-10a	57
3A.5.1-10b	57
3A.5.1-11a	57
3A.5.1-11b	57
3A.5.1-12a	57
3A.5.1-12b	57
3A.5.1-13a	57
3A.5.1-13b	57
3A.5.1-14a	57
3A.5.1-14b	57
3A.5.1-15a	57
3A.5.1-15b	57
3A.5.1-16a	57
3A.5.1-16b	57
3A.5.1-17a	57
3A.5.1-17b	57
3A.5.1-18a	57
3A.5.1-18b	57
3A.5.1-19a	57
3A.5.1-19b	57
3A.5.1-20a	57
3A.5.1-20b	57
3A.5.1-21a	57
3A.5.1-21b	57
3A.5.1-22a	57
3A.5.1-22b	57
3A.5.1-23a	57
3A.5.1-23b	57
3A.5.1-24a	57
3A.5.1-24b	57
3A.5.1-25a	57
3A.5.1-25b	57
3A.5.1-26a	57
3A.5.1-26b	57
Section 3A.5.1	
3A.5.2-1	53
3A.5.2-2	57
3A.5.2-3	53
3A.5.2 Figures	
3A.5.2-1	53
3A.5.2-2	57
3A.5.2-3	53
3A.5.2-4	53
3A.5.2-5	57
3A.5.2-6	57
3A.5.2-7	57
3A.5.2-8	57
3A.5.2-9	57
3A.5.2-10	57
Section 3A.B	
3A.B-1	53
3A.B-2	54
3A.B-3	64
3A.B-4	53
3A.B-5	53
3A.B-6	53
3A.B-7	53
3A.B-8	53
3A.B-9	53
3A.B-10	53
3A.B-11	53
3A.B-12	53
3A.B Figures	
3A.B-1	53
3A.B-2	53
3A.B-3	53
3A.B-4	53
3A.B-5	53
3A.B-6	53
3A.B-7	53
3A.B-8	53
3A.B-9	53
Section 3A.C	
3A.C-1	53
3A.C-2	53
3A.C-3	53
Section 3A.D	
3A.D-1	53
3A.D-2	55
3A.D-3	59
3A.D-4	53
3A.D-5	54
3A.D-6	53
3A.D-7	53

*Indicates blank page
**Indicates unnumbered page

LIST OF EFFECTIVE PAGES

Page	Amendment
3A.D-8	53
3A.D-9	53
*	
3A.D-11	53
3A.D-12	53
3A.D-13	53
3A.D-14	53
3A.D-15	54
3A.D-16	53
3A.D Figures	
3A.D-1	53
3A.D-2	53
3A.D-3	53
3A.D-4	53
3A.D-5	53
3A.D-6	53
3A.D-7	53
3A.D-8	53
3A.D-9	53
3A.D-10	53
3A.D-11	57
Section 3A.E	
3A.E-1	54
3A.E-2	63
3A.E-3	53
Section 3A.F	
3A.F-1	59
3A.F-2	53
Section 3A.H	
3A.H-1	53
*	
3A.H-3	53
3A.H-4	53
3A.H-5	53
3A.H-6	53
3A.H-7	53
3A.H-8	53
3A.H-9	53
3A.H-10	53
3A.H-11	53
3A.H-12	53
Section 3A.I	
3A.I-1	54
3A.I-2	55
3A.I-3	55
*	
3A.I-5	53
3A.I Figures	
3A.I-1	64
VOLUME XIII	
CHAPTER 4	
4-i	57
4-ii	57
4-iii	61
4-iv	61
4-v	63
4-vi	63
4-vii	61
4-viii	61
4-ix	61
4-x	61
4-xi	67
4-xii	61
4-xiii	61
Section 4.1	
4.1-1	66
4.1-2	63
4.1-3	64
4.1-4	66
4.1-5	63
4.1-6	57
4.1-7	57
4.1-8	57
4.1-9	60
4.1-10	57
4.1-11	57
4.1-12	57
4.1-13	57
4.1-14	57
4.1-15	66
4.1-16	66
4.1-17	63
*	
4.1 Figures	
4.1-1	53
4.1-2	53
4.1-3	61
Section 4.2	
4.2-1	63
4.2-2	63
4.2-3	66
4.2-4	60
4.2-5	60
4.2-6	66
4.2-7	66
4.2-8	66
4.2-9	60
4.2-10	60
4.2-11	66
4.2-12	63
4.2-13	63
*	
4.2-15	57
4.2 Figures	
4.2-1.1	57
4.2-1.2	57
4.2-1.3	57
4.2-1.4	57
4.2-1.5	57
4.2-2	57
Section 4.3	
4.3-1	66
4.3-2	66
4.3-3	67
4.3-4	67
4.3-5	67

*Indicates blank page
**Indicates unnumbered page

LIST OF EFFECTIVE PAGES

Page	Amendment
4.3-6	64
4.3-7	67
4.3-8	66
4.3-9	64
4.3 Figures	
4.3-1	58
Section 4.4	
4.4-1	66
4.4-2	66
4.4-3	66
4.4-4	57
4.4-5	66
4.4-6	63
4.4-7	66
4.4-8	66
4.4-9	61
*	
4.4-11	66
4.4-12	66
4.4-13	57
4.4-14	57
4.4-15	66
4.4 Figures	
4.4-1	64
4.4-2	64
Section 4.5	
4.5-1	56
4.5-2	56
4.5-3	56
4.5-4	56
4.5-5	66
4.5-6	59
4.5-7	59
4.5-8	58
4.5-9	58
Section 4.6	
4.6-1	53
4.6-2	53
4.6-3	53
4.6-4	53
4.6-5	53
4.6-6	63
4.6-7	63
4.6-8	63
4.6-9	53
4.6-10	63
4.6-11	64
4.6-12	53
4.6-13	53
4.6-14	64
4.6-15	60
4.6-16	53
4.6-17	53
4.6-18	53
4.6-19	53
4.6-20	53
4.6-21	65
4.6-22	53
4.6-23	53
4.6-24	53
4.6-25	53
4.6-26	64
4.6-27	63
4.6-28	53
4.6-29	53
4.6-30	65
4.6-31	65
4.6-32	59
4.6-33	59
4.6-34	59
4.6 Figures	
4.6-1	53
4.6-2	53
4.6-3	53
4.6-4	53
4.6-5.1	65
4.6-5.2	66
4.6-6.1	53
4.6-6.2	53
4.6-6.3	63
4.6-7	53
4.6-8	53
CHAPTER 5	
5-i	54
5-ii	58
5-iii	58
5-iv	58
5-v	56
5-vi	59
5-vii	56
5-viii	57
5-ix	58
5-x	63
5-xi	53
5-xii	65
Section 5.1	
5.1-1	53
5.1-2	53
5.1-3	59
5.1 Figures	
5.1-1	64
5.1-2	53
Section 5.2	
5.2-1	54
5.2-2	54
5.2-3	54
5.2-4	63
5.2-5	63
5.2-6	61
5.2-7	54
5.2-8	54
5.2-9	54
5.2-10	54
5.2-11	54
5.2-12	54
5.2-13	54
5.2-14	54
5.2-15	54
5.2-16	54
5.2-17	62
5.2-18	58
5.2-19	61

*Indicates blank page
**Indicates unnumbered page

LIST OF EFFECTIVE PAGES

Page	Amendment
5.2-20	62
5.2-21	58
5.2-22	58
5.2-23	58
5.2-24	58
5.2-25	58
5.2-26	58
5.2-27	58
5.2-28	61
5.2-29	58
5.2-30	58
5.2-31	58
5.2-32	58
5.2-33	58
5.2-34	61
5.2-35	63
*	
5.2-37	56
5.2-38	56
5.2-39	56
5.2-40	56
5.2-41	63
5.2-42	56
5.2-43	56
5.2-44	56
5.2-45	57
5.2-46	65
5.2-47	56
5.2-48	61
5.2-49	56
5.2-50	56
5.2-51	56
5.2-52	62
5.2 Figures	
5.2-1	53
5.2-2	63
5.2-3	53
5.2-4	53
5.2-5	61
5.2-6	53
5.2-7	53
5.2-8	53
5.2-9	53
5.2-10	53
5.2-11	63
Section 5.3	
5.3-1	60
5.3-2	58
5.3-3	58
5.3-4	58
5.3-5	67
5.3-6	67
5.3-7	67
5.3-8	64
5.3-9	58
5.3-10	67
5.3-11	67
5.3-12	58
5.3-13	58
5.3-14	58
5.3-15	58
5.3-16	58
5.3-17	62
*	
5.3-19	53
5.3-20	54
5.3-21	58
5.3-22	53
5.3-23	53
5.3-24	53
5.3-25	53
5.3-26	58
5.3-27	58
5.3-28	58
5.3-29	67
5.3-30	67
5.3-31	59
5.3-32	62
5.3-33	58
5.3 Figures	
5.3-1.1	67
5.3-1.2	67
5.3-1.3	67
5.3-2	57
5.3-3	53
5.3-4	53
5.3-5	53
5.3-6	53
5.3-7	53
Section 5.4	
5.4-1	53
5.4-2	62
5.4-3	56
5.4-4	67
5.4-5	56
5.4-6	56
5.4-7	56
5.4-8	59
5.4-9	65
5.4-10	56
5.4-11	67
5.4-12	67
5.4-13	56
5.4-14	56
5.4-15	63
5.4-16	59
5.4-17	59
5.4-18	65
5.4-19	59
5.4-20	59
5.4-21	67
5.4-22	59
5.4-23	59
5.4-24	67
5.4-25	67
5.4-26	67
5.4-27	59
5.4-28	59
5.4-29	63
5.4-30	60
5.4-31	59
5.4-32	59
5.4-33	59
5.4-34	59
5.4-35	59
5.4-36	59
5.4-37	59
5.4-38	59
5.4-39	67
5.4-40	65
5.4-41	59
5.4-42	59
5.4-43	58
5.4-44	58
5.4-45	58

*Indicates blank page
**Indicates unnumbered page

LIST OF EFFECTIVE PAGES

Page	Amendment
5.4-46	62
5.4-47	60
5.4-48	67
5.4-49	56
5.4-50	56
5.4-51	56
5.4-52	59
5.4-53	54
5.4-54	54
5.4-55	53
5.4-56	59
5.4-57	53
5.4-58	67
5.4-59	53
5.4-60	53
5.4-61	53
5.4-62	53
5.4-63	64
5.4-64	64
5.4 Figures	
5.4-1	53
5.4-2	53
5.4-3	53
5.4-4	53
5.4-5	53
5.4-6	53
5.4-7.1	66
5.4-7.2	64
5.4-8	53
5.4-9	53
5.4-10	53
5.4-11	65
5.4-12	59
5.4-13	53
5.4-14	53
5.4-15.1	65
5.4-15.2	65
5.4-15.3	66
5.4-15.4	65
5.4-16	63
5.4-17.1	65
5.4-17.2	54
5.4-18	65
5.4-19	62
5.4-20	58
5.4-21	55
5.4-22.1	66
5.4-22.2	65
5.4-22.3	66
5.4-23.1	53
5.4-23.2	53
5.4-24	53
5.4-25	55
VOLUME XIV	
CHAPTER 6	
6-i	63
6-ii	59
6-iii	67
6-iv	67
6-v	67
6-vi	63
6-vii	63
6-viii	60
6-ix	67
6-x	67
6-xi	67
6-xii	63
6-xiii	63
6-xiv	63
6-xv	63
6-xvi	64
Section 6.1	
6.1-1	53
6.1-2	53
6.1-3	53
6.1-4	58
6.1-5	59
*	
6.1-7	59
6.1-8	63
6.1-9	65
6.1-10	59
6.1-11	59
Section 6.2	
6.2-1	59
6.2-2	53
6.2-3	54
6.2-4	54
6.2-5	64
6.2-6	63
6.2-7	64
6.2-8	64
6.2-9	63
6.2-9a	63
6.2-10	59
6.2-11	59
6.2-12	59
6.2-13	63
6.2-14	63
6.2-15	63
6.2-16	63
6.2-17	59
6.2-18	63
6.2-19	63
6.2-20	59
6.2-21	59
6.2-22	59
6.2-23	61
6.2-24	62
6.2-25	64
6.2-26	63
6.2-27	59
6.2-28	59
6.2-29	59
6.2-30	59
6.2-31	59
6.2-32	59
6.2-33	59
6.2-34	63
6.2-35	63
6.2-35a	63
6.2-36	65
6.2-37	59
6.2-38	59
6.2-39	65
6.2-40	59
6.2-41	59
6.2-42	59
6.2-43	67

*Indicates blank page
**Indicates unnumbered page

LIST OF EFFECTIVE PAGES

Page	Amendment	Page	Amendment	Page	Amendment
6.2-44	67	6.2-85	67	6.2-4	53
6.2-45	67	6.2-86	67	6.2-5	53
6.2-46	67	6.2-87	67	6.2-6	53
6.2-47	67	6.2-88	67	6.2-7	53
6.2-48	67	6.2-89	67	6.2-8	53
6.2-49	67	6.2-90	67	6.2-9	53
6.2-49A	67	6.2-91	67	6.2-10	53
6.2-50	67	6.2-92	67	6.2-11	57
6.2-51	67	6.2-93	67	6.2-12	57
6.2-52	67	6.2-94	67	6.2-13	53
6.2-53	67	6.2-95	67	6.2-14	53
6.2-54	67	6.2-96	67	6.2-15	53
6.2-55	67	6.2-97	67	6.2-16	53
6.2-56	67	6.2-98	67	6.2-17	53
6.2-57	67	6.2-99	67	6.2-18	53
6.2-58	67	6.2-100	67	6.2-19	53
6.2-59	67	6.2-101	67	6.2-20	53
6.2-60	67	6.2-102	67	6.2-21	53
6.2-61	67	6.2-103	67	6.2-22	53
6.2-62	67	6.2-104	67	6.2-23	53
6.2-63	67	6.2-105	67	6.2-24	53
6.2-64	67	6.2-106	67	6.2-25	53
6.2-65	67	6.2-107	67	6.2-26	53
6.2-66	67	6.2-108	67	6.2-27	53
6.2-67	67	6.2-109	67	6.2-28	53
6.2-68	67	6.2-110	67	6.2-29	53
6.2-69	67	6.2-111	67	6.2-30	53
6.2-70	67	6.2-112	67	6.2-31	53
6.2-71	67	6.2-113	67	6.2-32	53
6.2-71a	67	6.2-114	67	6.2-33	53
6.2-71b	67	6.2-115	67	6.2-34	59
6.2-72	67	6.2-116	67	6.2-35	59
6.2-73	67	6.2-117	67	6.2-36	67
6.2-74	67	6.2-118	67	6.2-37	61
6.2-75	67	6.2-119	67	6.2-38	53
6.2-75a	67	6.2-120	67	6.2-39	66
6.2-76	67	6.2-121	67	6.2-40	53
6.2-76a	67	6.2-122	67	6.2-41	61
6.2-77	67	6.2-123	67	6.2-42	59
6.2-78	67	6.2-124	67	6.2-43	67
6.2-79	67	6.2-125	67	6.2-44	53
6.2-80	67			6.2-45	59
6.2-81	67	**6.2 Figures**		6.2-46	65
6.2-82	67			6.2-47	57
6.2-83	67	6.2-1	53	6.2-48	57
6.2-84	67	6.2-2	53	6.2-49	61
6.2-84a	67	6.2-3	65	6.2-50	53

*Indicates blank page
**Indicates unnumbered page

LIST OF EFFECTIVE PAGES

Page	Amendment
6.2-51	61
6.2-52	61
6.2-53	56
6.2-54	64
6.2-55	53
6.2-56	53
6.2-57	63
6.2-58	63
6.2-59	53
6.2-60	54
6.2-60A	64
6.2-61	58
Section 6.3	
6.3-1	63
6.3-2	57
6.3-3	57
6.3-4	57
6.3-5	57
6.3-6	59
6.3-7	59
6.3-8	59
6.3-9	57
6.3-10	57
6.3-11	59
6.3-12	59
6.3-13	59
6.3-14	67
6.3-15	59
6.3-16	62
6.3-17	65
6.3-18	59
6.3-19	59
6.3-20	66
6.3-21	63
6.3-22	66
6.3-23	64
6.3-24	63
6.3-25	66
6.3-26	64
6.3-27	66
6.3-28	66
6.3-29	65
6.3-30	63
6.3-31	64
6.3-32	66
*	
*	
*	
*	
6.3-37	65
6.3-38	63
6.3-39	66
6.3-40	63
6.3-41	63
6.3-42	63
6.3-43	63
6.3-44	63
6.3-45	66
6.3-46	66
6.3-47	66
6.3 Figures	
6.3-1	53
6.3-2	53
6.3-3.1	65
6.3-3.2	65
6.3-4	65
6.3-5	53
6.3-6	59
6.3-7	53
6.3-8	53
6.3-9	53
Section 6.4	
6.4-1	63
6.4-2	60
6.4-3	60
6.4-4	63
6.4-5	60
6.4-6	60
6.4-7	67
6.4-8	65
6.4-9	65
6.4-10	60
Section 6.5	
6.5-1	60
6.5-2	62
6.5-3	59
6.5-4	64
6.5-5	64
6.5-6	64
6.5-7	60
6.5-8	60
6.5-9	62
6.5-10	59
Section 6.6	
6.6-1	56
Section 6.7	
6.7-1	59
VOLUME XV	
CHAPTER 7	
7-i	59
7-ii	62
7-iii	61
7-iv	59
7-v	59
7-vi	61
7-vii	59
7-viii	60
7-ix	60
7-x	59
7-xi	63
7-xii	59
7-xiii	59
7-xiv	57
7-xv	59
7-xvi	58
7-xvii	58
7-xviii	63
Section 7.1	
7.1-1	53
7.1-2	63
7.1-3	59
7.1-4	59
7.1-5	53
7.1-6	60

*Indicates blank page
**Indicates unnumbered page

LIST OF EFFECTIVE PAGES

Page	Amendment
7.1-7	65
7.1-8	59
7.1-9	55
7.1-10	60
7.1-11	55
*	
7.1-13	59
7.1-14	59
7.1-15	59
7.1-16	59
7.1-17	59
7.1-18	60
Section 7.2	
7.2-1	53
7.2-2	53
7.2-3	64
7.2-4	63
7.2-4a	63
7.2-5	63
7.2-6	64
7.2-7	63
7.2-8	64
7.2-9	62
7.2-10	63
7.2-11	63
7.2-12	63
7.2-13	62
7.2-14	62
7.2-15	62
7.2-16	62
7.2-17	63
7.2-18	62
7.2-19	62
7.2-20	64
7.2-21	64
7.2-22	64
7.2-23	64
7.2-24	53
7.2 Figures	
7.2-1.1	53
7.2-1.2	64
7.2-1.3	64
7.2-1.4	53
7.2-2	64
7.2-3	54
7.2-4	53
7.2-5	63
7.2-6	63
7.2-7	53
7.2-8.1	53
7.2-8.2	53
7.2-8.3	53
7.2-9	53
7.2-10.1	63
7.2-10.2	63
7.2-11	53
Section 7.3	
7.3-1	59
7.3-2	59
7.3-3	65
7.3-4	59
7.3-5	59
7.3-6	59
7.3-7	58
7.3-8	58
7.3-9	62
7.3-10	61
7.3-11	61
7.3-12	61
7.3-13	61
7.3-14	61
7.3-15	61
7.3-16	61
7.3-17	64
7.3-18	61
7.3-19	61
7.3-20	61
7.3-21	63
7.3-22	61
7.3-23	59
7.3-24	59
7.3-25	59
7.3-26	59
7.3-27	59
7.3-28	59
7.3-29	59
7.3-30	67
7.3-31	59
7.3-32	59
7.3-33	59
7.3-34	59
7.3-35	61
7.3-36	61
7.3-37	59
7.3-38	59
7.3-39	59
7.3-40	59
7.3-41	63
7.3-42	61
7.3-43	59
7.3-44	59
7.3-45	59
7.3 Figures	
7.3-1	62
7.3-2	53
7.3-3	53
7.3-4.1	57
7.3-4.2	53
7.3-4.3	60
7.3-5	53
7.3-6	53
7.3-7.1	53
7.3-7.2	58
7.3-7.3	60
7.3-8.1	61
7.3-8.2	61
7.3-8.3	56
7.3-8.4	62
7.3-8.5	53
7.3-9.1	58
7.3-9.2	56
7.3-10.1	57
7.3-10.2	59
7.3-10.3	58
7.3-10.4	62
7.3-10.5	60
7.3-11	59
7.3-12.1	53
7.3-12.2	60
7.3-12.3	53
7.3-12.4	60
7.3-12.5	53
7.3-12.6	53

*Indicates blank page
**Indicates unnumbered page

LIST OF EFFECTIVE PAGES

Page	Amendment
7.3-12.7	56
7.3-12.8	53
7.3-12.9	53
7.3-12.10	53
7.3-12.11	60
7.3-12.12	53
7.3-12.13	65
7.3-12.14	53
7.3-12.15	53
7.3-12.16	53
7.3-12.17	53
7.3-12.18	53
7.3-12.19	53
7.3-13.1	60
7.3-13.2	53
7.3-13.3	60
7.3-13.4	60
7.3-13.5	64
7.3-13.6	61
7.3-13.7	61
7.3-13.8	64
7.3-13.9	64
7.3-13.10	61
7.3-13.11	53
7.3-14.1	57
7.3-14.2	57
7.3-14.3	57
7.3-14.4	57
7.3-14.5	53
7.3-14.6	53
7.3-14.7	53
7.3-14.8	53
7.3-14.9	53
7.3-14.10	53
7.3-15.1	54
7.3-15.2	54
7.3-15.3	54
7.3-15.4	54
7.3-15.5	54
7.3-15.6	54
7.3-15.7	54
7.3-15.8	54
7.3-15.9	54
7.3-15.10	54

VOLUME XVI

Page	Amendment
Section 7.4	
7.4-1	58
7.4-2	59
7.4-3	59
7.4-4	67
7.4-5	65
7.4-6	65
7.4-7	59
7.4-8	59
7.4-9	59
7.4-10	56
7.4-11	57
7.4-12	58
7.4-13	58
7.4-14	58
7.4-15	58
7.4-16	58
7.4-17	58
7.4-18	58
7.4-19	58
*	
7.4-21	56
7.4-22	56
7.4-23	56
7.4 Figures	
7.4-1.1	59
7.4-1.2	53
7.4-1.3	58
7.4-1.4	56
7.4-1.5	65
7.4-2	53
7.4-3	55
7.4-4	53
7.4-5	53
7.4-6.1	53
7.4-6.2	53
Section 7.5	
7.5-1	53
7.5-2	64
7.5-3	64
7.5-4	55
7.5-5	55
7.5-6	55
7.5-7	65
7.5-8	61
7.5-9	61
7.5-10	61
7.5-11	64
7.5-12	61
7.5-13	61
7.5-14	61
7.5-15	60
7.5-16	59
7.5-17	59
7.5-18	60
7.5-19	60
7.5-20	59
7.5-21	66
7.5-22	65
7.5-23	58
7.5-24	59
7.5-25	59
7.5-26	59
7.5-27	65
7.5-28	65
7.5-29	65
7.5-30	65
7.5-31	65
*	
7.5-33	65
7.5-34	64
7.5-35	65
7.5-36	65
7.5-37	65
7.5-38	65
7.5-39	65
Section 7.6	
7.6-1	54
7.6-2	54
7.6-3	61
7.6-4	54
7.6-5	54
7.6-6	54
7.6-7	54
7.6-8	60

*Indicates blank page
**Indicates unnumbered page

LIST OF EFFECTIVE PAGES

Page	Amendment
7.6-9	60
7.6-10	60
7.6-11	66
7.6-12	63
7.6-13	63
7.6-14	63
7.6-15	64
7.6-16	64
7.6-17	60
7.6-18	67
7.6-19	60
7.6-20	60
7.6-21	60
7.6-22	60
7.6-23	56
7.6-24	56
7.6-25	56
7.6-26	64
7.6-27	57
7.6-28	57
7.6-29	66
7.6-30	61
7.6-31	61
*	
7.6-33	56
7.6-34	56
7.6-35	56
7.6-36	60
7.6-37	56
7.6-38	64
7.6-39	56
7.6-40	56
7.6-41	56
7.6-42	56
7.6 Figures	
7.6-1.1	58
7.6-1.2	58
7.6-2	53
7.6-3.1	63
7.6-3.2	53
7.6-3.3	63
7.6-3.4	53
7.6-3.5	64
7.6-3.6	53
7.6-3.7	53
7.6-4	53
7.6-5	53
7.6-6	53
7.6-7	53
7.6-8	53
7.6-9	53
7.6-10.1	63
7.6-10.2	63
7.6-11	63
7.6-12	64
7.6-13	64
7.6-14	53
7.6-15	53
7.6-16	53
7.6-17	60
7.6-18	60
7.6-19	54
7.6-20	53
7.6-21	61
7.6-22	60
7.6-23	60
7.6-24	60
7.6-25	60
7.6-26	56
Section 7.7	
7.7-1	63
7.7-2	54
7.7-3	54
7.7-4	54
7.7-5	54
7.7-6	54
7.7-7	64
7.7-8	63
7.7-9	63
7.7-10	63
7.7-11	63
7.7-12	54
7.7-13	64
7.7-14	64
7.7-15	53
7.7-16	63
7.7-17	63
7.7-18	63
7.7-19	55
7.7-20	55
7.7-21	63
7.7-22	59
7.7-23	59
7.7-24	64
7.7-25	59
7.7-26	59
7.7-27	59
7.7-28	59
7.7-29	59
7.7-30	59
7.7-31	63
7.7-32	63
7.7-33	64
7.7-34	59
7.7-35	59
7.7-36	63
7.7-37	63
7.7-38	63
7.7-39	63
7.7-40	67
7.7-41	59
7.7-42	61
7.7-43	59
7.7-44	61
7.7-45	59
*	
7.7-47	63
7.7-48	63
7.7-49	59
7.7-50	59
7.7 Figures	
7.7-1	53
7.7-2.1	53
7.7-2.2	53
7.7-2.3	53
7.7-2.4	53
7.7-2.5	53
7.7-2.6	53
7.7-2.7	53
7.7-3.1	53
7.7-3.2	53
7.7-4.1	54
7.7-4.2	53
7.7-5	53
7.7-6	53

*Indicates blank page
**Indicates unnumbered page

LIST OF EFFECTIVE PAGES

Page	Amendment
7.7-7	53
7.7-8	65
7.7-9	59
7.7-10	54
7.7-11	54
7.7-12	54
7.7-13	64
7.7-14	64
7.7-15	57
7.7-16	64
7.7-17	63
VOLUME XVII	
CHAPTER 8	
8-i	66
8-ii	60
8-iii	63
8-iv	63
8-v	63
8-vi	66
8-vii	67
8-viii	63
8-ix	53
8-x	64
8-xi	53
8-xii	58
Section 8.1	
8.1-1	57
8.1-2	67
8.1-3	61
8.1-4	61
8.1-5	61
8.1-6	61
8.1-7	66
8.1-8	61
8.1-9	61
8.1-10	61
8.1-11	61
*	
8.1-13	61
8.1 Figures	
8.1-1	67
8.1-2.1	67
8.1-2.2	67
8.1-2.3	67
8.1-2.4	61
8.1-3	59
8.1-4	64
8.1-5	64
8.1-6.1	67
8.1-6.2	65
Section 8.2	
8.2-1	66
8.2-2	67
8.2-3	67
8.2-4	67
8.2-5	66
8.2-6	66
8.2-7	66
8.2-8	66
8.2-9	66
8.2-10	66
8.2-10a	66
8.2-11	57
8.2 Figures	
8.2-1.1	53
8.2-1.2	53
8.2-2.1	53
8.2-2.2	53
8.2-3.1	53
8.2-3.2	53
8.2-3.3	53
8.2-3.4	53
8.2-4.1	53
8.2-4.2	53
8.2-4.3	53
8.2-4.4	53
8.2-5.1	53
8.2-5.2	53
8.2-5.3	53
8.2-5.4	53
8.2-6.1	53
8.2-6.2	53
8.2-6.3	53
8.2-6.4	53
8.2-7.1	53
8.2-7.2	53
8.2-7.3	53
8.2-7.4	53
Section 8.3	
8.3-1	59
8.3-2	59
8.3-3	59
8.3-4	62
8.3-5	59
8.3-6	59
8.3-7	64
8.3-8	64
8.3-9	64
8.3-10	63
8.3-11	60
8.3-12	60
8.3-13	60
8.3-14	60
8.3-15	60
8.3-16	60
8.3-17	60
8.3-18	66
8.3-19	62
8.3-20	62
8.3-21	60
8.3-22	66
8.3-23	60
8.3-24	60
8.3-25	60
8.3-26	60
8.3-27	67
8.3-28	60
8.3-29	60
8.3-30	60
8.3-31	64
8.3-32	60
8.3-33	63
8.3-34	63
8.3-35	60
8.3-36	60
8.3-37	60

*Indicates blank page
**Indicates unnumbered page

LIST OF EFFECTIVE PAGES

Page	Amendment
8.3-38	60
8.3-39	65
8.3-40	60
8.3-41	60
8.3-42	65
8.3-43	67
8.3-44	60
8.3-45	62
8.3-46	64
8.3-47	63
8.3-48	63
8.3-49	63
8.3-50	60
8.3-51	60
8.3-52	60
8.3-53	60
8.3-54	60
8.3-55	60
8.3-56	60
8.3-57	60
8.3-58	60
8.3-59	63
8.3-60	63
8.3-61	63
8.3-62	60
8.3-63	60
8.3-64	60
8.3-65	60
8.3-66	63
8.3-67	65
8.3-68	63
8.3-69	60
8.3-70	63
8.3-71	60
8.3-72	66
8.3-73	66
8.3-74	66
8.3-75	66
8.3-76	66
8.3-77	66
8.3-78	66
8.3-79	67
8.3-80	67
8.3-81	67
8.3-82	67
8.3-83	67
8.3-84	62
8.3-85	57
8.3-86	57
8.3-87	62
8.3-88	57
8.3-89	60
8.3-90	60
8.3-91	60
8.3-92	67
8.3-93	63
8.3-94	63
8.3-95	63
8.3-96	63
8.3 Figures	
8.3-1	53
8.3-2	53
8.3-3	57
8.3-4.1	67
8.3-4.2	67
8.3-4.3	67
8.3-4.4	67
8.3-4.5	66
8.3-4.6	67
8.3-5.1	66
8.3-5.2	67
8.3-6	66
8.3-7	63
8.3-8	53
8.3-9	63
8.3-10	53
8.3-11	65
8.3-12	65
8.3-13	53
8.3-14	64
8.3-15	58
8.3-16.1	53
8.3-16.2	58
8.3-17	67
8.3-18	65
8.3-19	53
8.3-20	65
8.3-21	58
8.3-22.1	53
8.3-22.2	58
8.3-23	63
8.3-24	53
8.3-25	57
8.3-26	66
8.3-27	64
8.3-28	67
8.3-29	64
8.3-30	64
8.3-31	53
8.3-32	62
8.3-33	54
8.3-34	59
8.3-35	53
8.3-36	59
8.3-37	54
8.3-38	64
8.3-39	53
8.3-40	53
8.3-41	53
8.3-42	53
8.3-43	53
8.3-44	53
8.3-45	53
8.3-46	53
8.3-47	53
8.3-48	53
8.3-49	57
8.3-50.1	57
8.3-50.2	57
8.3-50.3	53
8.3-51.1	57
8.3-51.2	57
8.3-52.1	67
8.3-52.2	65
8.3-53	57
Appendix 8A	
8A-i	53
8A-ii	53
Section 8A	
8A-1	54
8A-2	53
8A-3	56
8A-4	64
8A-5	57
8A-6	64

*Indicates blank page
**Indicates unnumbered page

LIST OF EFFECTIVE PAGES

Page	Amendment
8A-7	57
8A-8	57
8A-9	67
8A-10	57
8A-11	57
8A-12	64
8A-13	53
8A-14	53
8A-15	53
8A-16	57
8A-17	53
8A-18	57
8A-19	57
8A-20	56
VOLUME XVIII	
CHAPTER 9	
9-i	61
9-ii	60
9-iii	60
9-iv	60
9-v	61
9-vi	60
9-vii	60
9-viii	63
9-ix	61
9-x	66
9-xi	60
9-xii	60
9-xiii	61
9-xiv	60
9-xv	60
9-xvi	60
9-xvii	66
9-xviii	60
Section 9.1	
9.1-1	60
9.1-2	63
9.1-3	62
9.1-4	66
9.1-5	60
9.1-6	60
9.1-7	62
9.1-8	66
9.1-9	62
9.1-10	60
9.1-11	63
9.1-12	63
9.1-13	63
9.1-14	63
9.1-15	63
9.1-16	60
9.1-17	63
9.1-18	63
9.1-19	60
9.1-20	60
9.1-21	60
9.1-22	60
9.1-23	60
9.1-24	63
9.1-25	60
9.1-26	64
9.1-27	60
9.1-28	60
9.1-29	66
9.1-30	60
9.1-31	62
9.1-32	66
9.1-33	60
9.1-34	60
9.1-35	60
9.1-36	60
9.1-37	60
9.1-38	60
9.1-39	60
9.1-40	67
9.1-41	67
9.1-42	60
9.1-43	60
9.1-44	60
9.1-45	60
9.1-46	60
9.1-47	60
9.1-48	60
9.1-49	60
9.1-50	60
9.1-51	60
9.1-52	60
9.1-53	60
9.1-54	60
9.1-55	60
9.1-56	60
9.1-57	60
9.1-58	60
9.1-59	60
9.1-60	60
9.1-61	60
9.1-62	67
9.1-63	60
9.1-64	60
9.1-65	66
9.1-66	63
9.1-67	63
9.1-68	60
9.1-69	66
9.1-70	60
9.1-71	60
9.1-72	60
9.1-73	62
9.1-74	62
9.1-75	60
9.1-76	60
9.1 Figures	
9.1-1	53
9.1-2	53
9.1-3	59
9.1-4	53
9.1-5	65
9.1-6.1	65
9.1-6.2	66
9.1-7	53
9.1-8	53
9.1-9	53
9.1-10	53
9.1-11	53
9.1-12	53
9.1-13	53
9.1-14	53
9.1-15	53
9.1-16	57
9.1-17	58
9.1-18	58

*Indicates blank page
**Indicates unnumbered page

LIST OF EFFECTIVE PAGES

Page	Amendment
Section 9.2	
9.2-1	58
9.2-2	65
9.2-3	65
9.2-4	58
9.2-5	58
9.2-6	58
9.2-7	59
9.2-8	58
9.2-9	58
9.2-10	62
9.2-11	60
9.2-12	60
9.2-13	60
9.2-14	61
9.2-15	65
9.2-16	62
9.2-17	61
9.2-18	61
9.2-19	61
9.2-20	61
9.2-21	58
9.2-22	59
9.2-23	58
9.2-24	65
9.2-25	65
9.2-26	58
9.2-27	59
*	
9.2-29	57
9.2-30	57
9.2-31	57
9.2-32	57
9.2-33	57
9.2-34	57
9.2-35	67
9.2-36	67
9.2-37	67
9.2-38	67
9.2-39	67
9.2-40	67
9.2-41	57
9.2-42	57
9.2-43	57
9.2-44	67
9.2-45	67
9.2-46	67
9.2-47	67
9.2-48	61
9.2 Figures	
9.2-1.1	66
9.2-1.2	67
9.2-2.1	65
9.2-2.2	66
9.2-3	67
9.2-4	67
9.2-5.1	67
9.2-5.2	66
9.2-5.3	67
9.2-6	62
9.2-7	66
9.2-8	53
9.2-9	65
9.2-10	65
9.2-11.1	65
9.2-11.2	66
9.2-12.1	66
9.2-12.2	66
9.2-12.3	66
9.2-13	66
9.2-14	66
9.2-15	63
Section 9.3	
9.3-1	60
9.3-2	53
9.3-3	67
9.3-4	67
9.3-5	67
9.3-6	66
9.3-7	66
9.3-8	53
9.3-9	63
9.3-10	56
9.3-11	59
9.3-12	56
9.3-13	58
9.3-14	58
9.3-15	58
9.3-16	61
9.3-17	58
9.3-18	58
9.3-19	57
9.3-20	63
9.3-21	63
9.3-22	59
9.3-23	61
9.3-24	59
9.3-25	61
9.3-26	59
9.3-27	61
*	
9.3-29	54
9.3-30	54
9.3-31	57
9.3-32	57
9.3-33	57
9.3-34	56
9.3-35	57
9.3-36	57
9.3 Figures	
9.3-1.1	66
9.3-1.2	66
9.3-1.3	63
9.3-1.4	67
9.3-1.5	67
9.3-2.1	65
9.3-2.2	54
9.3-3	65
9.3-4	65
9.3-5	64
9.3-6	53
9.3-7	53
9.3-8	53
9.3-9	65
9.3-10	63
9.3-11	67
9.3-12	67
9.3-13	65
9.3-14	65
9.3-15	61
9.3-16	53
9.3-17	58

*Indicates blank page
**Indicates unnumbered page

LIST OF EFFECTIVE PAGES

Page	Amendment
Section 9.4	
9.4-1	54
9.4-2	54
9.4-3	66
9.4-4	66
9.4-5	66
9.4-6	67
9.4-7	66
9.4-8	66
9.4-9	66
9.4-10	66
9.4-11	63
9.4-12	60
9.4-13	60
9.4-14	60
9.4-15	60
9.4-16	60
9.4-17	60
9.4-18	60
9.4-19	60
9.4-20	60
9.4-21	60
9.4-22	62
9.4-23	60
9.4-24	65
9.4-25	65
9.4-26	59
9.4-27	60
9.4-28	57
9.4-29	57
9.4-30	57
9.4-31	60
9.4-32	57
9.4-33	57
9.4-34	57
9.4-35	57
9.4-36	61
9.4-37	61
9.4-38	61
9.4-39	61
9.4-40	61
9.4-41	61
9.4-42	61
9.4-43	61
9.4-44	61
9.4-45	61
9.4-46	61
9.4-47	61
9.4-48	61
9.4-49	61
9.4-50	61
9.4-51	66
*	
9.4-53	60
9.4-54	62
9.4-55	60
9.4-56	61
9.4-57	66
9.4-58	62
9.4-59	60
9.4-60	60
9.4-61	60
9.4-62	62
9.4-63	65
9.4-64	60
9.4-65	60
9.4-66	60
9.4-67	60
9.4-68	63
9.4-69	60
9.4-70	60
9.4-71	60
9.4-72	60
9.4-73	60
9.4 Figures	
9.4-1.1	65
9.4-1.2	64
9.4-1.3	66
9.4-2.1	65
9.4-2.2	65
9.4-2.3	63
9.4-3.1	65
9.4-3.2	63
9.4-4.1	67
9.4-4.2	62
9.4-5	58
9.4-6.1	63
9.4-6.2	67
9.4-7	66
9.4-8.1	66
9.4-8.2	65
9.4-8.3	66
9.4-9.1	65
9.4-9.2	62
Section 9.5	
9.5-1	57
9.5-2	63
9.5-3	59
9.5-4	58
9.5-5	66
9.5-5a	66
9.5-6	63
9.5-7	58
9.5-8	66
9.5-9	62
9.5-10	60
9.5-11	60
9.5-12	59
9.5-13	60
9.5-14	61
9.5-15	63
9.5-16	61
9.5-17	61
9.5-18	61
9.5-19	67
9.5-20	61
9.5-21	58
9.5-22	67
9.5-23	58
9.5-24	58
9.5-25	67
9.5-26	58
9.5-27	63
9.5-28	67
9.5-29	61
9.5-30	61
9.5-31	66
9.5-31a	63
9.5-32	59
9.5-33	59
9.5-34	65
9.5-35	58
9.5-36	58

*Indicates blank page
**Indicates unnumbered page

LIST OF EFFECTIVE PAGES

Page	Amendment
9.5 Figures	
9.5-1.1	66
9.5-1.2	66
9.5-1.3	66
9.5-1.4	65
9.5-2	64
9.5-3	53
9.5-4	53
9.5-5	66
9.5-6	53
VOLUME XIX	
CHAPTER 10	
10-i	59
10-ii	59
10-iii	58
10-iv	58
10-v	64
10-vi	58
Section 10.1	
10.1-1	64
10.1-2	53
10.1-3	64
10.1 Figures	
10.1-1	67
10.1-2	64
Section 10.2	
10.2-1	54
10.2-2	55
10.2-3	59
10.2-4	64
10.2-5	61
10.2-6	61
10.2 Figures	
10.2-1	53
10.2-2	53
10.2-3	53
10.2-4	64
10.2-5	59
10.2-6.1	64
10.2-6.2	65
10.2-6.3	65
10.2-7.1	59
10.2-7.2	66
10.2-7.3	63
Section 10.3	
10.3-1	59
10.3-2	59
10.3-3	59
10.3-4	59
10.3 Figures	
10.3-1.1	67
10.3-1.2	67
10.3-1.3	66
10.3-2	67
Section 10.4	
10.4-1	61
10.4-2	61
10.4-3	61
10.4-4	61
10.4-5	61
10.4-6	61
10.4-7	58
10.4-8	58
10.4-9	58
10.4-10	59
10.4-11	58
10.4-12	61
10.4-13	58
10.4-14	58
10.4-15	58
10.4-16	63
10.4-17	64
10.4-18	58
10.4-19	58
10.4-20	58
10.4-21	58
10.4-22	66
10.4-23	59
10.4-24	59
10.4-25	59
10.4.26	59
10.4-27	59
10.4-28	59
10.4-29	59
10.4-30	59
10.4-31	59
*	
10.4-33	58
10.4-34	58
10.4 Figures	
10.4-1	66
10.4-2	64
10.4-3	53
10.4-4.1	67
10.4-4.2	65
10.4-4.3	65
10.4-5	67
10.4-6.1	67
10.4-6.2	66
10.4-6.3	61
10.4-7.1	67
10.4-7.2	66
10.4-8.1	67
10.4-8.2	67
10.4-8.3	66
10.4-9.1	63
10.4-9.2	67
10.4-9.3	63
CHAPTER 11	
11-i	57
11-ii	58
11-iii	58
11-iv	63
11-v	58
11-vi	57
11-vii	57
11-viii	55
11-ix	63
11-x	65

*Indicates blank page
**Indicates unnumbered page

LIST OF EFFECTIVE PAGES

Page	Amendment
Section 11.1	
11.1-1	53
11.1-2	53
11.1-3	53
11.1-4	53
11.1-5	53
11.1-6	53
11.1-7	53
11.1-8	53
11.1-9	53
11.1-10	53
11.1-11	54
11.1-12	54
11.1-13	53
11.1-14	53
11.1-15	53
11.1-16	53
11.1-17	53
11.1-18	53
11.1-19	53
11.1 Figures	
11.1-1	53
11.1-2	53
11.1-3	53
Section 11.2	
11.2-1	53
11.2-2	63
11.2-3	57
11.2-4	57
11.2-5	57
11.2-6	57
11.2-7	57
11.2-8	57
11.2-9	63
11.2-10	57
11.2-11	57
11.2-12	57
11.2-13	57
11.2-14	57
11.2-15	57
11.2-16	57
11.2-17	57
11.2-18	57
11.2-19	57
11.2-20	57
11.2-21	57
11.2-22	57
11.2-23	59
11.2-24	57
11.2-25	57
11.2-26	57
11.2-27	57
11.2-28	57
11.2-29	57
11.2-30	57
11.2-31	57
11.2-32	57
11.2-33	57
11.2-34	57
11.2-35	57
11.2-36	57
11.2-37	57
11.2-38	57
11.2-39	57
11.2-40	57
11.2-41	57
11.2-42	57
11.2-43	57
11.2 Figures	
11.2-1	57
11.2-2	67
11.2-3	67
11.2-4.1	63
11.2-4.2	65
11.2-4.3	57
Section 11.3	
11.3-1	58
11.3-2	58
11.3-3	58
11.3-4	58
11.3-5	58
11.3-6	58
11.3-7	58
11.3-8	58
11.3-9	58
11.3-10	58
11.3-11	58
11.3-12	58
11.3-13	58
11.3-14	66
11.3-15	53
11.3-16	54
11.3-17	54
11.3-18	60
11.3-19	53
11.3-20	53
11.3-21	53
11.3-22	53
11.3-23	58
11.3-24	62
11.3-25	53
11.3-26	53
11.3-27	54
11.3-28	54
11.3-29	54
11.3 Figures	
11.3-1	54
11.3-2.1	67
11.3-2.2	66
Section 11.4	
11.4-1	57
11.4-2	64
11.4-3	54
11.4-4	53
11.4-5	57
11.4-6	53
11.4-7	55
11.4-8	55
11.4-9	61
11.4-10	61
11.4-11	61
11.4-12	61
11.4-13	57
11.4-14	61
11.4-15	54
11.4-16	53
11.4-17	57
11.4-18	53

*Indicates blank page
**Indicates unnumbered page

LIST OF EFFECTIVE PAGES

Page	Amendment
11.4-19	53
11.4-20	53
11.4-21	53
11.4 Figures	
11.4-1	65
Section 11.5	
11.5-1	63
11.5-2	58
11.5-3	58
11.5-4	58
11.5-5	58
11.5-6	63
11.5-7	63
11.5-8	61
11.5-9	61
11.5-10	65
11.5-11	65
11.5-12	65
11.5-12a	65
11.5-12b	65
11.5-13	65
11.5-14	63
11.5-15	60
11.5-16	60
11.5-17	60
11.5-18	60
11.5-19	60
11.5-20	66
11.5-21	60
*	
11.5-23	63
11.5-24	65
11.5-25	63
11.5-26	60
11.5-27	59
11.5-28	53
11.5-29	54
11.5-30	53
11.5-31	53

Page	Amendment
11.5 Figures	
11.5-1	53
11.5-2	53
11.5-3	63
11.5-4	59
11.5-5	58
11.5-6	65
11.5-7	63
11.5-8	57
11.5-9	60
11.5-10	60
11.5-11	65
11.5-11A	65
Section 11.6	
11.6-1	58
11.6-2	58
11.6-3	58
CHAPTER 12	
12-i	62
12-ii	58
12-iii	59
12-iv	63
12-v	63
12-vi	62
12-vii	59
Section 12.1	
12.1-1	60
12.1-2	67
12.1-3	65
12.1-4	60
12.1-5	60
12.1-6	60
12.1-7	60
12.1-8	62
12.1-9	60
12.1-10	60
12.1-11	60

Page	Amendment
Section 12.2	
12.2-1	53
12.2-2	54
12.2-3	67
12.2-4	53
12.2-5	53
12.2-6	63
12.2-7	63
12.2-8	57
12.2-9	57
12.2-10	57
12.2-11	57
12.2-12	57
12.2-13	57
12.2-14	57
12.2-15	57
*	
12.2-17	64
12.2-18	53
12.2-19	53
12.2-20	53
12.2-21	53
12.2-22	53
12.2-23	53
12.2-24	53
12.2-25	53
12.2-26	53
12.2-27	53
12.2-28	66
12.2-28a	65
12.2-29	53
12.2-30	58
12.2-31	53
12.2-32	53
12.2-33	53
Section 12.3	
12.3-1	62
12.3-2	62
12.3-3	54
12.3-4	55
12.3-5	55
12.3-6	58
12.3-7	58
12.3-8	58

*Indicates blank page
**Indicates unnumbered page

LIST OF EFFECTIVE PAGES

Page	Amendment
12.3-9	67
12.3-10	58
12.3-11	58
12.3-12	58
12.3-13	58
12.3-14	58
12.3-15	58
12.3-16	59
12.3-17	62
12.3-18	63
12.3-19	60
12.3-20	63
12.3-21	66
12.3-22	59
12.3-23	58
*	
12.3-25	54
12.3-26	54
12.3-27	54
12.3 Figures	
12.3-1	62
12.3-2	62
12.3-3	62
12.3-4	62
12.3-5	57
12.3-6	64
12.3-7	57
12.3-8	57
12.3-9	54
12.3-10	54
12.3-11	63
12.3-12	64
12.3-13	64
12.3-14	62
12.3-15	62
12.3-16	62
12.3-17	66
12.3-18	65
12.3-19	54
12.3-20	54
12.3-21	54
12.3-22	54
12.3-23	54
12.3-24	54
Section 12.4	
12.4-1	58
12.4-2	58
12.4-3	58
12.4-4	58
12.4-5	58
*	
12.4-7	53
12.4-8	53
12.4-9	53
12.4-10	53
12.4-11	53
12.4-12	53
12.4-13	53
12.4-14	53
12.4-15	53
12.4-16	53
12.4-17	54
Section 12.5	
12.5-1	67
12.5-2	67
12.5-3	65
12.5-4	65
12.5-5	65
12.5-6	65
12.5-7	65
12.5-8	65
12.5-9	65
12.5-10	59
12.5-11	59
12.5-12	65
12.5-13	59
12.5-14	59
12.5-15	60
12.5-16	67
12.5-17	61
12.5-18	67
12.5-19	67
*	
12.5-21	65
VOLUME XX	
CHAPTER 13	
13-i	65
13-ii	67
13-iii	62
13-iv	61
13-v	63
Section 13.1	
13.1-1	66
13.1-2	67
13.1-3	67
13.1-4	67
13.1-5	67
13.1-6	61
13.1-7	65
13.1-8	65
13.1-9	65
13.1-10	67
13.1-11	64
13.1-12	67
13.1-13	67
13.1-14	66
13.1-15	66
13.1-16	67
13.1-17	67
*	
13.1-19	61
13.1-20	61
13.1 Figures	
13.1-1	63
13.1-2	67
13.1-3	67
13.1-4	67
13.1-5	63
13.1-6	65
13.1-7	61
13.1-8	62
13.1-9	67
13.1-10	67
13.1-11	67
13.1-12	67

*Indicates blank page
**Indicates unnumbered page

LIST OF EFFECTIVE PAGES

Page	Amendment
13.1-13	67
Section 13.2	
13.2-1	63
13.2-2	58
13.2-3	64
13.2-4	64
13.2-5	67
13.2-6	57
13.2-7	67
Section 13.3	
13.3-1	53
Section 13.4	
13.4-1	63
13.4-2	65
Section 13.5	
13.5-1	62
13.5-2	55
13.5-3	62
13.5-4	55
13.5-5	55
Section 13.6	
13.6-1	53
CHAPTER 14	
14-i	54
14-ii	57
14-iii	57
14-iv	57
14-v	61
14-vi	57
14-vii	57
14-viii	57
14-ix	57
14-x	57
14-xi	57
14-xii	57
14-xiii	53
14-xiv	54
Section 14.1	
14.1-1	53
Section 14.2	
14.2-1	53
14.2-2	53
14.2-3	53
14.2-4	54
14.2-5	54
14.2-6	54
14.2-7	54
14.2-8	54
14.2-9	53
14.2-10	54
14.2-11	57
14.2-12	57
14.2-13	57
14.2-14	57
14.2-15	57
14.2-16	57
14.2-17	57
14.2-18	57
14.2-19	57
14.2-20	57
14.2-21	57
14.2-22	57
14.2-23	57
14.2-24	57
14.2-25	57
14.2-26	57
14.2-27	57
14.2-28	57
14.2-29	57
14.2-30	57
14.2-31	59
14.2-32	57
14.2-33	57
14.2-34	57
14.2-35	57
14.2-36	57
14.2-37	57
14.2-38	57
14.2-39	57
14.2-40	57
14.2-41	57
14.2-42	57
14.2-43	57
14.2-44	57
14.2-45	57
14.2-46	57
14.2-47	57
14.2-48	57
14.2-49	57
14.2-50	57
14.2-51	57
14.2-52	57
14.2-53	57
14.2-54	57
14.2-55	58
14.2-56	58
14.2-57	58
14.2-58	57
14.2-59	57
14.2-60	57
14.2-61	57
14.2-62	57
14.2-63	60
14.2-64	60
14.2-65	53
14.2-66	53
14.2-67	53
14.2-68	53
14.2-69	53
14.2-70	53
14.2-71	57
14.2-72	53
14.2-73	53
14.2-74	53
14.2-75	53
14.2-76	53
14.2-77	53
14.2-78	53
14.2-79	53
14.2-80	57
14.2-81	57
14.2-82	57
14.2-83	57
14.2-84	57
14.2-85	57

*Indicates blank page
**Indicates unnumbered page

LIST OF EFFECTIVE PAGES

Page	Amendment
14.2-86	57
14.2-87	57
14.2-88	57
14.2-89	57
14.2-90	57
14.2-91	57
14.2-92	57
14.2-93	57
14.2-94	57
14.2-95	57
14.2-96	57
14.2-97	57
14.2-98	57
14.2-99	53
14.2-100	54
14.2-101	53
14.2-102	53
14.2-103	53
14.2-104	53
14.2-105	53
14.2-106	53
14.2-107	53
14.2-108	53
14.2-109	53
14.2-110	53
14.2-111	53
14.2-112	53
14.2-113	53
14.2-114	53
14.2-115	55
14.2-116	53
14.2-117	53
14.2-118	53
14.2-119	53
14.2-120	53
14.2-121	53
14.2-122	53
14.2-123	53
14.2-124	53
14.2-125	53
14.2-126	53
14.2-127	54
*	
14.2-129	53
14.2-130	53
14.2-131	53
14.2-132	53
14.2-133	53
14.2-134	53
14.2-135	53
14.2-136	53
14.2-137	53
14.2-138	53
14.2-139	53
14.2-140	53
14.2 Figures	
14.2-1	53
14.2-2	53
14.2-3	53
14.2-4	53
14.2-5	53
14.2-6	53
CHAPTER 15	
15-i	60
15-ii	61
15-iii	61
15-iv	59
15-v	64
15-vi	61
15-vii	61
15-viii	61
15-ix	59
15-x	60
15-xi	60
15-xii	63
15-xiii	63
15-xiv	63
15-xv	59
15-xvi	61
15-xvii	63
15-xviii	61
15-xix	63
15-xx	61
15-xxi	61
15-xxii	59
15-xxiii	59
15-xxiv	63
15-xxv	64
15-xxvi	64
15-xxvii	64
Section 15.0	
15.0-1	64
15.0-2	64
15.0-3	64
15.0-4	64
15.0-4a	63
15.0-5	63
15.0-6	63
15.0-7	60
15.0-8	60
15.0-9	66
15.0-10	63
15.0-11	66
15.0-12	66
15.0-13	63
15.0-14	63
15.0-15	64
*	
15.0-17	64
15.0-18	64
15.0-19	66
15.0-20	64
15.0-21	66
15.0-22	64
15.0-23	66
15.0-24	61
15.0-25	61
15.0-26	66
15.0-27	61
15.0-28	61
15.0-29	61
15.0-30	61
15.0 Figures	
15.0-1	53
15.0-2	58
Section 15.1	
15.1-1	63
15.1-2	60
15.1-3	66
15.1-4	64
15.1-5	63
15.1-6	63

*Indicates blank page
**Indicates unnumbered page

LIST OF EFFECTIVE PAGES

Page	Amendment
15.1-7	63
15.1-8	61
15.1-9	61
15.1-10	64
15.1-11	61
15.1-12	66
15.1-13	61
15.1-14	61
15.1-15	63
*	
15.1-17	63
15.1-18	64
15.1-19	64
15.1-20	61
15.1-21	61
15.1 Figures	
15.1-1	66
15.1-2.1	64
15.1-2.2	64
15.1-2.3	64
15.1-2.4	64
15.1-2.5	64
15.1-2.6	64
15.1-2.7	64
15.1-2.8	64
15.1-2.9	64
15.1-2.10	64
15.1-2.11	64
15.1-3.1	64
15.1-3.2	64
15.1-3.3	64
15.1-3.4	64
Section 15.2	
15.2-1	59
15.2-2	64
15.2-3	64
15.2-4	59
15.2-5	64
15.2-6	63
15.2-7	64
15.2-8	63
15.2-9	61
15.2-10	64
15.2-11	66
15.2-12	61
15.2-13	61
15.2-14	61
15.2-15	64
15.2-16	61
15.2-17	61
15.2-18	64
15.2-19	61
15.2-20	61
15.2-21	61
15.2-22	64
15.2-23	61
15.2-24	61
15.2-25	61
15.2-26	64
15.2-27	61
15.2-28	61
15.2-29	61
15.2-30	61
15.2-31	61
15.2-32	64
15.2-33	63
*	
15.2-35	64
15.2-36	61
15.2-37	63
15.2-38	61
15.2-39	61
15.2-40	64
15.2-41	64
15.2-42	61
15.2-43	64
15.2-44	64
15.2-45	64
15.2-46	61
15.2-47	61
15.2 Figures	
15.2-1	64
15.2-2.1	59
15.2-2.2	66
15.2-3	53
15.2-4	66
15.2-5	64
15.2-6	64
15.2-7	64
15.2-8	64
15.2-9	64
15.2-10.1	59
15.2-10.2	54
15.2-11	53
15.2-12	53
15.2-13	53
15.2-14	53
15.2-15	53
15.2-16	53
15.2-17	53
15.2-18	53
15.2-19	53
Section 15.3	
15.3-1	59
15.3-2	59
15.3-3	64
15.3-4	59
15.3-5	64
15.3-6	64
15.3-7	63
15.3-8	64
15.3-9	60
15.3-10	64
15.3-11	60
15.3-12	60
15.3-13	53
15.3-14	59
15.3-15	53
15.3-16	53
15.3-17	59
15.3-18	60
15.3 Figures	
15.3-1.1	64
15.3-1.2	64
15.3-1.3	64
15.3-1.4	64
15.3-1.5	64
15.3-2.1	64
15.3-2.2	64
15.3-2.3	64
15.3-2.4	64

*Indicates blank page
**Indicates unnumbered page

LIST OF EFFECTIVE PAGES

Page	Amendment
15.3-2.5	64
15.3-3.1	64
15.3-3.2	64
15.3-3.3	64
15.3-3.4	64
15.3-3.5	64
15.3-4.1	64
15.3-4.2	64
15.3-4.3	64
15.3-4.4	64
15.3-4.5	64
15.3-5.1	64
15.3-5.2	64
15.3-5.3	64
15.3-5.4	64
15.3-5.5	64
15.3-6	63
Section 15.4	
15.4-1	59
15.4-2	59
15.4-3	55
15.4-4	66
15.4-5	60
15.4-6	66
15.4-7	64
15.4-8	64
15.4-9	66
15.4-10	60
15.4-11	66
15.4-12	63
15.4-13	66
15.4-14	63
15.4-15	61
15.4-16	61
15.4-17	60
15.4-18	64
15.4-19	63
15.4-20	66
15.4-21	63
15.4-22	57
15.4-23	66
15.4-24	59
15.4-25	57
15.4-26	59
15.4-27	59
15.4-28	59
15.4-29	59
15.4-30	59
15.4-31	59
15.4-32	59
15.4 Figures	
15.4-1.1	64
15.4-1.2	64
15.4-1.3	64
15.4-1.4	64
15.4-1.5	64
15.4-2	59
Section 15.5	
15.5-1	60
15.5-2	60
15.5-3	66
*	
15.5-5	64
15.5 Figures	
15.5-1	64
Section 15.6	
15.6-1	59
15.6-2	59
15.6-3	59
15.6-4	59
15.6-5	59
15.6-6	59
15.6-7	59
15.6-8	59
15.6-9	66
15.6-10	64
15.6-11	63
15.6-12	63
15.6-13	59
15.6-14	59
15.6-15	59
15.6-16	59
15.6-17	57
15.6-18	59
15.6-19	59
15.6-20	59
15.6-21	59
15.6-22	59
15.6-23	59
15.6-24	59
15.6-25	59
15.6-26	59
15.6-27	59
15.6-28	59
15.6-29	61
15.6-30	59
15.6-31	59
15.6-32	59
15.6-33	59
15.6 Figures	
15.6-1	59
15.6-2	53
15.6-3	59
15.6-4	53
Section 15.7	
15.7-1	53
15.7-2	55
15.7-3	57
15.7-4	59
15.7-5	66
15.7-6	60
15.7-7	66
*	
15.7-9	57
15.7-10	59
15.7-11	59
15.7-12	59
15.7-13	59
15.7-14	59
15.7 Figures	
15.7-1	59

*Indicates blank page
**Indicates unnumbered page

LIST OF EFFECTIVE PAGES

Page	Amendment
Section 15.8	
15.8-1	59
15.8-2	64
15.8-2a	64
15.8-3	59
15.8-4	61
15.8-5	63
15.8-6	63
15.8-7	63
15.8-8	63
15.8-9	61
15.8-10	61
15.8-11	61
15.8-12	63
15.8-13	63
15.8-14	63
15.8-15	63
15.8-16	64
15.8-17	59
15.8-17a	63
15.8-18	66
15.8-19	64
15.8-20	61
15.8-21	63
15.8-22	63
15.8-23	61
15.8-24	63
15.8 Figures	
15.8-1.1	64
15.8-1.2	53
15.8-1.3	53
15.8-1.4	53
15.8-1.5	64
15.8-2.1	64
15.8-2.2	64
15.8-2.3	63
15.8-2.4	63
15.8-2.5	63
15.8-3.1	63
15.8-3.2	63
15.8-3.3	63
15.8-3.4	63
15.8-3.5	63
15.8-4.1	53
15.8-4.2	53
15.8-4.3	64
15.8-4.4	53
15.8-4.5	64
15.8-5.1	64
15.8-5.2	64
15.8-5.3	63
15.8-5.4	63
15.8-5.5	63
VOLUME XXI	
CHAPTER 16	
Section 16.1	
16-1	62
CHAPTER 17	
17-i	54
17-ii	54
17-iii	53
17-iv	54
Section 17.1	
17.1-1	57
17.1-2	57
17.1-3	57
17.1-4	57
17.1-5	57
17.1-6	57
17.1-7	57
17.1-8	57
17.1-9	57
17.1-10	57
17.1-11	57
17.1-12	57
17.1-13	57
17.1-14	54
17.1-15	59
17.1-16	53
17.1-17	53
17.1-18	53
17.1-19	53
17.1-20	54
17.1-21	53
17.1-22	53
17.1-23	54
17.1-24	53
17.1-25	54
17.1-26	54
17.1-27	53
17.1-28	54
17.1-29	53
17.1-30	54
17.1-31	53
17.1-32	53
17.1-33	53
17.1-34	54
17.1-35	54
17.1-36	53
17.1-37	53
17.1-38	53
17.1-39	53
17.1-40	54
17.1-41	54
17.1-42	53
17.1-43	53
17.1-44	53
17.1-45	53
17.1-46	53
17.1-47	53
17.1 Figures	
17.1-1	53
17.1-2	53
17.1-3	53
17.1-4	53
17.1-5	53
Section 17.2	
17.2-1	54
APPENDIX A	
A-i	67
A-ii	65
A-iii	62
A-iv	66

*Indicates blank page
**Indicates unnumbered page

LIST OF EFFECTIVE PAGES

Page	Amendment
Section A.1	
A.1-1	62
Section A.2	
A.2-1	66
A.2-2	67
A.2-3	67
A.2-4	67
A.2-5	62
A.2-6	67
A.2-7	67
A.2-8	67
A.2-9	67
A.2-10	67
A.2-11	67
A.2-12	67
A.2-13	67
A.2-14	67
A.2-15	67
A.2-16	67
A.2-17	67
A.2-18	67
A.2-19	67
A.2-20	67
A.2-21	67
A.2-22	67
A.2-23	67
A.2-24	67
A.2-25	62
A.2-26	62
A.2-27	64
A.2-28	62
A.2-29	62
A.2-30	62
A.2-31	62
A.2-32	62
A.2-33	62
A.2-34	62
A.2-35	62
A.2-36	62
A.2-37	62
A.2-38	62
A.2-39	66

Page	Amendment
Section A.3	
A.3-1	67
Section A.4	
A.4-1	67
A.4-2	67
A.4-3	67
A.4-4	67
A.4-5	67
A.4-6	67
A.4-7	67
A.4-8	67
A.4-9	67
A.4-10	67
A.4-11	67
A.4-12	67
A.4-13	67
A.4-14	67
A.4-15	67
A.4-16	67
A.4-17	67
APPENDIX B	
B-i	56
B-ii	55
B-iii	55
Section B.1	
B.1-1	53
B.1-2	55
B.1-3	63
*	
B.1-5	54
B.1-6	54
B.1-7	54
B.1-8	54
B.1-9	55
B.1-10	55
B.1-11	67
B.1-12	55
B.1-13	55
B.1-14	55
B.1-15	55

Page	Amendment
B.1-16	55
B.1-17	55
B.1-18	55
B.1-19	55
B.1-20	55
B.1-21	55
Section B.2	
B.2-1	53
B.2-2	53
B.2-3	53
B.2-4	55
B.2-5	53
B.2-6	53
B.2-7	53
B.2-8	55
B.2-9	55
B.2-10	55
B.2-11	55
B.2-12	55
B.2-13	55
B.2-14	55
B.2-15	55
B.2-16	55
B.2-17	55
*	
B.2-19	53
*	
B.2-21	55
B.2-22	55
B.2-23	55
B.2-24	55
B.2-25	55
B.2-26	55
B.2-27	55
B.2-28	65
B.2-29	56
B.2-30	56
B.2-31	56
B.2-32	56
B.2-33	56
B.2-34	56
B.2-35	56
B.2-36	56
B.2-37	56
B.2-38	56

*Indicates blank page
**Indicates unnumbered page

LIST OF EFFECTIVE PAGES

Page	Amendment
B.2-39	53
B.2-40	53
B.2-41	53
B.2-42	54
B.2-43	53
B.2-44	53
B.2-45	66
B.2-46	66
B.2-47	53
B.2-48	53
B.2-49	53
B.2-50	53
B.2-51	54
*	
B.2-53	53
Figure II.K.3.45-1	54
Section B.3	
B.3-1	56
B.3-2	56
B.3-3	56
B.3-4	56
B.3-5	56
APPENDIX I	
I-i	54
I-ii	57
I-iii	53
I-iv	53
I-v	55
I-vi	53
Section I.1	
I.1-1	54
I.1-2	53
Section I.2	
I.2-1	53
I.2-2	53
Section I.3	
I.3-1	54
I.3-2	53
I.3-3	53
I.3-4	54
I.3-5	54
Section I.4	
I.4-1	57
I.4-2	57
I.4-3	53
I.4-4	53
I.4-5	53
Section I.5	
I.5-1	53
I.5-2	53
I.5-3	53
Section I.6	
I.6-1	53
*	
I.6-3	55
I.6-4	55
I.6-5	53
*	
I.6-7	53
I.6-8	53
I.6-9	53
I.6-10	53
I.6-11	53
*	
I.6-13	53
I.6-14	53
I.6-15	53
*	
I.6-17	53
I.6-18	54
I.6-19	53
I.6-20	66
I.6-21	53
Section I.7	
I.7-1	53
I.7-2	53
I.7-3	56
I.7-4	54
I.7-5	53
Section I.8	
I.8-1	59
I.8-2	53
I.8-3	53
I.8-4	53
I.8-5	53
I.8-6	53
I.8-7	53
I.8-8	53
I.8-9	53
I.8-10	53
I.8-11	53
I.8-12	53
I.8-13	53
I.8-14	53
I.8-15	53
I.8-16	53
I.8-17	53
I.8-18	53
I.8 Figures	
I.8-1	53
I.8-2	53
I.8-3	53
I.8-4	53
APPENDIX J	
J-i	54
*	
J-iii	53
J-iv	54
J-v	53
J-vi	53
J-vii	53
J-viii	53
J-ix	53

*Indicates blank page
**Indicates unnumbered page

LIST OF EFFECTIVE PAGES

Page	Amendment
J-x	59
J-xi	59
J-xii	59
J-xiii	59
J-xiv	59
J-xv	59
J-xvi	67
Section J.1	
J.1-1	53
Section J.2	
J.2-1	53
J.2-2	53
J.2-3	54
J.2-4	54
J.2-5	55
Section J.3	
J.3-1	53
J.3-2	59
J.3-3	59
J.3-4	59
J.3-5	53
J.3-6	53
J.3-7	55
J.3-8	53
J.3-9	59
J.3-10	59
J.3-11	59
Section J.4	
J.4-1	53
J.4-2	53
Section J.5	
J.5-1	53
J.5-2	53
J.5-3	53
J.5-4	54
J.5-5	53
J.5-6	59
J.5-7	58
J.5-8	59
J.5-9	55
*	
J.5-11	53
J.5 Figures	
J.5-1	53
J.5-2	53
J.5-3	53
Section J.6	
J.6-1	53
J.6-2	53
J.6-3	59
J.6-4	58
J.6-5	53
J.6-6	58
J.6-7	59
J.6 Figures	
J.6-1.1	53
J.6-1.2	53
J.6-2.1	53
J.6-2.2	53
J.6-3.1	53
J.6-3.2	53
J.6-4	53
J.6-5	53
J.6-6	53
J.6-7	53
J.6-8	53
J.6-9	53
J.6-10	53
J.6-11	53
J.6-12	53
J.6-13	53
J.6-14	53
J.6-15	53
J.6-16	53
J.6-17	65
J.6-18	53
Section J.7	
J.7-1	59
J.7-2	65
J.7-3	53
J.7-4	53
J.7-5	53
Section J.A	
J.A-1	53
*	
J.A-3	53
Section J.B	
J.B-1	53
J.B-2	53
J.B-3	53
J.B-4	53
J.B-5	53
J.B-6	53
J.B-7	53
J.B-8	53
J.B-9	53
J.B-10	53
J.B-11	53
J.B-12	53
J.B-13	53
J.B-14	53
J.B-15	53
*	
J.B-17	53
J.B-18	53
J.B Figures	
J.B-1	53
J.B-2	53
J.B-3	53
J.B-4	53
J.B-5	53
J.B-6	53
J.B-7	53
J.B-8	53
J.B-9	53
J.B-10	59

*Indicates blank page
**Indicates unnumbered page

LIST OF EFFECTIVE PAGES

Page	Amendment
J.B-11	59
J.B-12	53
J.B-13	53
J.B-14	53
J.B-15	53
J.B-16	53
J.B-17	53
J.B-18	58
Section J.C	
J.C-1	53
J.C-2	53
J.C-3	53
J.C-4	53
J.C-5	53
J.C-6	53
J.C-7	53
J.C-8	53
J.C-9	53
J.C-10	53
J.C-11	53
J.C-12	53
J.C-13	53
J.C Figures	
J.C-1	53
J.C-2	53
J.C-3	53
J.C-4	53
J.C-5	53
J.C-6	53
J.C-7	53
J.C-8	53
J.C-9	53
J.C-10	53
J.C-11	53
J.C-12	53
J.C-13	53
J.C-14	53
J.C-15	53
Section J.D	
J.D-1	53
J.D-2	53
J.D-3	53
J.D-4	53
J.D-5	53
J.D-6	53
J.D-7	53
J.D-8	53
J.D-9	53
J.D Figures	
J.D-1	53
J.D-2	53
J.D-3	53
Section J.E	
J.E-1	53
J.E-2	53
J.E-3	53
J.E-4	53
J.E-5	53
J.E Figures	
J.E-1	53
J.E-2	53
Section J.F	
J.F-1	53
J.F-2	53
J.F-3	53
J.F-4	53
J.F-5	53
J.F-6	53
J.F-7	53
J.F-8	53
J.F-9	53
J.F-10	53
J.F-11	57
J.F-12	53
J.F-13	53
J.F-14	53
J.F-15	53
J.F-16	53
J.F-17	53
J.F-18	53
J.F Figures	
J.F-1	53
J.F-2	53
J.F-3	53
J.F-4	53
J.F-5	53
J.F-6	53
J.F-7	53
J.F-8	53
J.F-9	53
Section J.G	
J.G-1	53
J.G-2	53
J.G-3	53
*	
J.G-5	53
J.G Figures	
J.G-1	53
J.G-2	53
Section J.H	
J.H-1	53
J.H-2	53
J.H-3	53
J.H-4	53
J.H-5	53
J.H-6	53
J.H-7	53
*	
J.H-9	53
VOLUME XXII	
APPENDIX F	
F-i	60
F-ii	60
F-iii	62
F-iv	60
F-v	61
F-vi	60

*Indicates blank page
**Indicates unnumbered page

LIST OF EFFECTIVE PAGES

Page	Amendment
F-vii	60
Section F.1	
F.1-1	60
F.1-2	67
F.1-3	60
F.1-4	60
Section F.2	
F.2-1	63
F.2-2	59
F.2-3	65
F.2-4	65
F.2-5	60
F.2-6	60
F.2-7	60
F.2-8	60
F.2-9	61
F.2-10	65
F.2-11	65
F.2-12	66
F.2-13	65
F.2-14	65
F.2-15	65
F.2-16	66
F.2-17	65
F.2-18	65
F.2-19	65
F.2-20	66
F.2-21	67
F.2-22	58
F.2-23	58
F.2-24	58
F.2-25	60
F.2-26	59
F.2-27	58
F.2-28	58
F.2-29	58
F.2-30	58
F.2-31	64
F.2-32	62
F.2-33	58
F.2-34	67
F.2-35	59
F.2-36	59
F.2-37	59
F.2-38	58
F.2-39	58
F.2-40	65
F.2-41	59
F.2-42	67
F.2-43	59
F.2-44	66
F.2-45	59
F.2-46	59
Section F.3	
F.3-1	60
*	
F.3-3	63
F.3-4	53
F.3-5	53
F.3-6	53
F.3-7	57
F.3-8	62
F.3-9	62
F.3-10	62
F.3-11	62
F.3-12	62
F.3-13	62
F.3-14	62
F.3-15	62
F.3-16	64
F.3-17	62
F.3-18	62
F.3-19	62
F.3-20	62
F.3-21	62
F.3-22	62
F.3-23	67
F.3-24	62
F.3-25	62
F.3-26	62
F.3-27	62
F.3-28	62
F.3-29	62
F.3-30	62
F.3-31	62
F.3-32	62
F.3-33	65
F.3-34	63
F.3-35	62
F.3-36	64
F.3-37	62
F.3-38	62
F.3-39	62
F.3-40	63
F.3-41	67
F.3-42	62
F.3-43	62
F.3-44	62
F.3-45	62
F.3-46	62
F.3-47	62
F.3-48	62
F.3-49	62
F.3-50	62
F.3-51	63
F.3-52	62
F.3-53	62
F.3-54	62
F.3-55	62
F.3-56	62
F.3-57	62
F.3-58	61
F.3-59	61
F.3-60	61
F.3-61	61
F.3-62	61
F.3-63	61
F.3-64	61
F.3-65	61
F.3-66	61
F.3-67	61
F.3-68	61
F.3-69	64
F.3-70	61
F.3-71	61
F.3-72	61
F.3-73	61
F.3-74	61
F.3-75	61
F.3-76	61
F.3-77	61
F.3-78	61
F.3-79	61
F.3-80	61

*Indicates blank page
**Indicates unnumbered page

LIST OF EFFECTIVE PAGES

Page	Amendment	Page	Amendment	Page	Amendment
Section F.4		F.4-46	57	F.4-92	58
		F.4-47	57	F.4-93	58
F.4-1	61	F.4-48	57	F.4-94	57
F.4-2	54	F.4-49	66	F.4-95	58
F.4-3	60	F.4-50	57	F.4-96	66
F.4-4	60	F.4-51	57	F.4-97	58
F.4-5	63	F.4-52	66	F.4-98	66
F.4-6	64	F.4-53	57	F.4-99	59
F.4-7	66	F.4-54	63	F.4-100	66
F.4-8	66	F.4-55	63	F.4-101	57
F.4-9	66	F.4-56	57	F.4-102	59
F.4-10	66	F.4-57	66	F.4-103	66
F.4-11	60	F.4-58	66	F.4-104	57
F.4-12	63	F.4-59	63	F.4-105	59
F.4-13	60	F.4-60	64	F.4-106	66
*		F.4-61	64	F.4-107	57
F.4-15	62	F.4-62	60	F.4-108	62
F.4-16	66	F.4-63	63	F.4-109	62
F.4-17	62	F.4-63a	63	F.4-110	62
F.4-18	62	F.4-64	57	F.4-111	57
F.4-19	60	F.4-65	57	F.4-112	57
F.4-20	64	F.4-66	57	F.4-113	66
F.4-21	61	F.4-67	57	F.4-114	60
F.4-22	61	F.4-68	58	F.4-115	58
F.4-23	62	F.4-69	63	F.4-116	60
F.4-24	61	F.4-70	57	F.4-117	57
F.4-25	61	F.4-71	66	F.4-118	58
*		F.4-72	57	F.4-119	60
F.4-27	61	F.4-73	57	F.4-120	57
F.4-28	66	F.4-74	66	F.4-121	57
F.4-29	63	F.4-75	57	F.4-122	65
F.4-30	61	F.4-76	57	F.4-123	57
F.4-31	65	F.4-77	66	F.4-124	62
F.4-32	61	F.4-78	57	F.4-125	65
F.4-33	61	F.4-79	57	F.4-126	57
F.4-34	66	F.4-80	66	F.4-127	65
F.4-35	61	F.4-81	57	F.4-128	66
F.4-36	57	F.4-82	57	F.4-129	62
F.4-37	66	F.4-83	66	F.4-130	66
F.4-38	57	F.4-84	57	F.4-131	57
F.4-39	57	F.4-85	63	F.4-132	65
F.4-40	66	F.4-86	57	F.4-133	66
F.4-41	57	F.4-87	58	F.4-134	65
F.4-42	57	F.4-88	57	F.4-135	66
F.4-43	57	F.4-89	63	F.4-136	57
F.4-44	57	F.4-90	57	F.4-137	58
F.4-45	57	F.4-91	57	F.4-138	65

*Indicates blank page
**Indicates unnumbered page

LIST OF EFFECTIVE PAGES

Page	Amendment
F.4-139	62
F.4-140	57
F.4-141	65
F.4-142	57
F.4-143	57
F.4-144	66
F.4-145	57
F.4-146	66
F.4-147	67
F.4-148	57
F.4-149	65
F.4-150	65
F.4-151	57
F.4-152	58
F.4-153	57
F.4-154	57
F.4-155	58
F.4-156	65
F.4-157	65
F.4-158	57
F.4-159	57
F.4-160	65
F.4-161	66
F.4-162	58
F.4-163	65
F.4-164	57
F.4-165	58
F.4-166	65
F.4-167	58
F.4-168	66
F.4-169	58
F.4-170	60
F.4-171	57
F.4-172	57
F.4-173	57
F.4-174	64
F.4-175	60
F.4-176	66
F.4-177	60
F.4-178	58
F.4-179	66
F.4-180	57
F.4-181	58
F.4-182	58
F.4-183	57
F.4-184	57
F.4-185	58
F.4-186	57
F.4-187	58
F.4-188	57
F.4-189	57
F.4-190	58
F.4-191	57
Section F.5	
F.5-1	60
Section F.6	
F.6-1	59
F.6-2	60
F.6 Figures	
F.6-1	64
F.6-2	61
F.6-3	65
F.6-4	67
F.6-5	62
F.6-6	66
F.6-7	67
F.6-8	59
F.6-9	67
F.6-10	66
F.6-11	62
F.6-12	65
F.6-13	58
F.6-14	66
F.6-15	66
F.6-16	63
F.6-17	56
F.6-18	66
F.6-19	66
F.6-20	60
F.6-21	67
Section F.7	
F.7-1	66
F.7-2	60
F.7-3	63
F.7-4	66
F.7-5	64
F.7-6	64
F.7-7	66
F.7-8	66
F.7-9	66
F.7-10	66
F.7-11	67

*Indicates blank page
**Indicates unnumbered page

Chapter 1

INTRODUCTION AND GENERAL DESCRIPTION OF PLANT

TABLE OF CONTENTS

Section		Page
1.1	INTRODUCTION	1.1-1
1.2	GENERAL PLANT DESCRIPTION	1.2-1
1.2.1	PRINCIPAL DESIGN CRITERIA	1.2-1
1.2.1.1	General Design Criteria	1.2-1
1.2.1.1.1	Power Generation Design Criteria	1.2-1
1.2.1.1.2	Safety Design Criteria	1.2-2
1.2.1.2	System Criteria	1.2-5
1.2.1.2.1	Nuclear System Criteria	1.2-5
1.2.1.2.2	Power Conversion System Criteria	1.2-6
1.2.1.2.3	Electrical Power Systems Criteria	1.2-6
1.2.1.2.4	Radwaste System Criteria	1.2-7
1.2.1.2.5	Auxiliary Systems Criteria	1.2-7
1.2.1.2.6	Shielding and Access Control Criteria	1.2-7
1.2.1.2.7	Nuclear Safety Systems and Engineered Safety Features Criteria	1.2-8
1.2.1.2.8	Process Control Systems Criteria	1.2-8
1.2.1.3	Plant Design Criteria	1.2-9
1.2.2	PLANT DESCRIPTION	1.2-10
1.2.2.1	Site Characteristics	1.2-10
1.2.2.1.1	Site Location and Size	1.2-10
1.2.2.1.2	Description of Site Environs	1.2-10
1.2.2.1.2.1	Site Land	1.2-10
1.2.2.1.2.2	Population	1.2-10
1.2.2.1.2.3	Land Use.	1.2-10
1.2.2.1.2.4	Meteorology	1.2-10
1.2.2.1.2.5	Hydrology.	1.2-10
1.2.2.1.2.6	Geology	1.2-10
1.2.2.1.2.7	Seismology	1.2-11
1.2.2.1.3	Design Basis Depending on Site Environs	1.2-11
1.2.2.2	General Arrangement of Structures and Equipment	1.2-12
1.2.2.3	Symbols Used on Engineering Drawings	1.2-13
1.2.2.4	Nuclear System	1.2-13
1.2.2.4.1	Reactor Core and Control Rods	1.2-13
1.2.2.4.2	Reactor Vessel and Internals	1.2-13
1.2.2.4.3	Reactor Recirculation System	1.2-14
1.2.2.4.4	Residual Heat Removal System	1.2-14

Chapter 1

INTRODUCTION AND GENERAL DESCRIPTION OF PLANT

TABLE OF CONTENTS

Section		Page
1.2.2.4.5	Reactor Water Cleanup System	1.2-15
1.2.2.4.6	Nuclear Leak Detection System	1.2-15
1.2.2.5	Nuclear Safety Systems and Engineered Safety Features	1.2-15
1.2.2.5.1	Reactor Protection System	1.2-15
1.2.2.5.2	Neutron Monitoring System	1.2-16
1.2.2.5.3	Control Rod Drive System	1.2-16
1.2.2.5.4	Control Rod Drive Housing Supports	1.2-16
1.2.2.5.5	Control Rod Velocity Limiter	1.2-16
1.2.2.5.6	Pressure Relief System (Nuclear System)	1.2-16
1.2.2.5.7	Reactor Core Isolation Cooling System	1.2-17
1.2.2.5.8	Emergency Core Cooling System	1.2-17
1.2.2.5.8.1	High-Pressure Core Spray System	1.2-17
1.2.2.5.8.2	Automatic Depressurization System	1.2-17
1.2.2.5.8.3	Low-Pressure Core Spray System	1.2-17
1.2.2.5.8.4	Low-Pressure Coolant Injection	1.2-18
1.2.2.5.9	Primary Containment	1.2-18
1.2.2.5.9.1	Functional Design	1.2-18
1.2.2.5.9.2	Drywell Cooling System	1.2-18
1.2.2.5.9.3	Suppression Pool Cooling	1.2-19
1.2.2.5.9.4	Containment Spray	1.2-19
1.2.2.5.9.5	Containment Atmosphere Control	1.2-19
1.2.2.5.10	Primary Containment and Reactor Vessel Isolation System.	1.2-19
1.2.2.5.11	Main Steam Line Isolation Valves	1.2-20
1.2.2.5.12	Main Steam Line Flow Restrictors	1.2-20
1.2.2.5.13	Main Steam Line Radiation Monitoring System	1.2-20
1.2.2.5.14	Standby Service Water and High-Pressure Core Spray Service Water Systems	1.2-20
1.2.2.5.15	Reactor Building - Secondary Containment	1.2-21
1.2.2.5.16	Reactor Building Ventilation Exhaust Radiation Monitoring System	1.2-21
1.2.2.5.17	Standby Gas Treatment System	1.2-22
1.2.2.5.18	Standby Alternating Current Power Supply System	1.2-22
1.2.2.5.19	Direct Current Power Supply System	1.2-23
1.2.2.5.20	Standby Liquid Control System	1.2-23
1.2.2.5.21	Safe Shutdown from Outside the Main Control Room	1.2-23
1.2.2.5.22	Main Steam Line Isolation Valve Leakage Control System (Deactivated)	1.2-24

Chapter 1

INTRODUCTION AND GENERAL DESCRIPTION OF PLANT

TABLE OF CONTENTS

Section		Page
1.2.2.5.23	Fuel Pool Cooling and Cleanup System	1.2-24
1.2.2.5.24	Hardened Containment Vent (HCV) System	1.2-24
1.2.2.6	Power Conversion System	1.2-24
1.2.2.6.1	Turbine Generator	1.2-24
1.2.2.6.2	Main Steam System	1.2-25
1.2.2.6.3	Main Condenser	1.2-25
1.2.2.6.4	Main Condenser Evacuation System	1.2-25
1.2.2.6.5	Turbine Gland Seal System	1.2-25
1.2.2.6.6	Steam Bypass System and Pressure Control System	1.2-26
1.2.2.6.7	Circulating Water System	1.2-26
1.2.2.6.8	Condensate and Feedwater System	1.2-26
1.2.2.6.9	Condensate Filter-Demineralizer System	1.2-26
1.2.2.7	Electrical Systems, Instrumentation, and Control	1.2-26
1.2.2.7.1	Electrical Power Systems	1.2-26
1.2.2.7.2	Electrical Power Systems Process Control and Instrumentation	1.2-27
1.2.2.7.3	Nuclear System Process Control and Instrumentation	1.2-27
1.2.2.7.3.1	Reactor Manual Control System	1.2-27
1.2.2.7.3.2	Recirculation Flow Control System	1.2-27
1.2.2.7.3.3	Neutron Monitoring System	1.2-28
1.2.2.7.3.4	Refueling Interlocks	1.2-28
1.2.2.7.3.5	Reactor Vessel Instrumentation	1.2-28
1.2.2.7.3.6	Process Computer System	1.2-28
1.2.2.7.4	Power Conversion Systems Process Control and Instrumentation	1.2-28
1.2.2.7.4.1	Digital Electro-Hydraulic Control System	1.2-28
1.2.2.7.4.2	Feedwater System Control	1.2-29
1.2.2.8	Radioactive Waste Systems	1.2-29
1.2.2.8.1	Liquid Radwaste System	1.2-29
1.2.2.8.2	Solid Radwaste System	1.2-29
1.2.2.8.3	Gaseous Radwaste System	1.2-30
1.2.2.9	Radiation Monitoring and Control	1.2-30
1.2.2.9.1	Process Radiation Monitoring	1.2-30
1.2.2.9.2	Area Radiation Monitors	1.2-31
1.2.2.9.3	Site Radiological Environmental Monitoring	1.2-31
1.2.2.9.4	Liquid Radwaste System Control	1.2-31
1.2.2.9.5	Solid Radwaste System Control	1.2-31
1.2.2.9.6	Gaseous Radwaste System Control	1.2-31

Chapter 1

INTRODUCTION AND GENERAL DESCRIPTION OF PLANT

TABLE OF CONTENTS (Continued)

Section Page

1.2.2.10 Shielding 1.2-32
1.2.2.11 Fuel Handling and Storage Systems 1.2-32
1.2.2.11.1 New and Spent Fuel Storage 1.2-32
1.2.2.11.2 Fuel Handling System 1.2-32
1.2.2.11.3 Fuel Pool Cooling and Cleanup System 1.2-32
1.2.2.12 Cooling Water and Auxiliary Systems 1.2-33
1.2.2.12.1 Reactor Building Closed Cooling Water System 1.2-33
1.2.2.12.2 Plant Service Water System 1.2-33
1.2.2.12.3 Ultimate Heat Sink 1.2-33
1.2.2.12.4 Demineralized Water Makeup System 1.2-33
1.2.2.12.5 Potable Water and Sanitary Drain Systems 1.2-33
1.2.2.12.6 Process Sampling Systems 1.2-33
1.2.2.12.7 Condensate Supply System 1.2-34
1.2.2.12.8 Equipment and Floor Drainage Systems 1.2-34
1.2.2.12.9 Compressed Air Systems 1.2-34
1.2.2.12.10 Heating, Ventilating, and Air Conditioning Systems 1.2-35
1.2.2.12.11 Fire Protection System 1.2-36
1.2.2.12.12 Communications Systems 1.2-37
1.2.2.12.13 Lighting Systems 1.2-37
1.2.2.12.14 Normal Auxiliary Alternating Current Power System 1.2-37
1.2.2.12.15 Diesel Generator Fuel Oil Storage and Transfer System 1.2-38
1.2.2.12.16 Auxiliary Steam System 1.2-38
1.2.3 COMPLIANCE WITH NRC REGULATORY GUIDES 1.2-38

1.3 COMPARISON TABLES 1.3-1
1.3.1 COMPARISONS WITH SIMILAR FACILITY DESIGNS 1.3-1
1.3.1.1 Nuclear Steam Supply System Design Characteristics 1.3-1
1.3.1.2 Power Conversion System Design Characteristics 1.3-1
1.3.1.3 Engineered Safety Features Design Characteristics 1.3-1
1.3.1.4 Containment Design Characteristics 1.3-1
1.3.1.5 Radioactive Waste Management Systems Design Characteristics 1.3-1
1.3.1.6 Structural Design Characteristics 1.3-1
1.3.1.7 Electrical Power Systems Design Characteristics 1.3-1
1.3.2 COMPARISON OF FINAL AND PRELIMINARY INFORMATION 1.3-2

Chapter 1

INTRODUCTION AND GENERAL DESCRIPTION OF PLANT

TABLE OF CONTENTS (Continued)

Section — Page

1.4 IDENTIFICATION OF AGENTS AND CONTRACTORS 1.4-1
1.4.1 APPLICANT/OPERATOR 1.4-1
1.4.2 ENGINEER AND CONSTRUCTION MANAGEMENT - BURNS & ROE, INC. 1.4-1
1.4.3 NUCLEAR STEAM SYSTEM SUPPLIER - GENERAL ELECTRIC COMPANY 1.4-1
1.4.4 TURBINE GENERATOR SUPPLIER - WESTINGHOUSE ELECTRIC CORPORATION. 1.4-2
1.4.5 SYSTEM COMPLETION CONTRACTOR - BECHTEL 1.4-2
1.4.6 MAJOR CONTRACTORS 1.4-2
1.4.6.1 Fischbach/Lord 1.4-2
1.4.6.2 Pittsburgh-Des Moines Steel Company 1.4-3
1.4.6.3 Wright - Schuchart - Harbor/Boecon (Boeing Construction) General Energy Resources, Inc. 1.4-3
1.4.6.4 Bechtel 1.4-3
1.4.6.5 Deleted 1.4-3
1.4.6.6 Westinghouse Electric 1.4-3
1.4.7 CONSULTING ENGINEER - R. W. BECK AND ASSOCIATES 1.4-3

1.5 REQUIREMENTS FOR FURTHER TECHNICAL INFORMATION 1.5-1
1.5.1 GENERIC ISSUES 1.5-1
1.5.1.1 Unresolved Safety Issues 1.5-2
1.5.1.1.1 Unresolved Safety Issues Introduction 1.5-2
1.5.1.1.2 Implementation of Specific Unresolved Safety Issues 1.5-2
1.5.1.1.3 Unresolved Safety Issues Implementation Summary 1.5-5
1.5.1.2 Generic Safety Issues 1.5-6
1.5.1.2.1 Generic Safety Issues Introduction 1.5-6
1.5.1.2.2 Implementation of Specific Generic Safety Issues 1.5-6
1.5.1.2.3 Generic Safety Issues Implementation Summary 1.5-8
1.5.1.3 TMI Task Action Plans 1.5-8
1.5.2 REFERENCES 1.5-8

1.6 MATERIAL INCORPORATED BY REFERENCE 1.6-1

1.7 ACRONYMS 1.7-1

Chapter 1

INTRODUCTION AND GENERAL DESCRIPTION OF PLANT

TABLE OF CONTENTS (Continued)

Section — Page

1.8 CONFORMANCE TO NRC REGULATORY GUIDES 1.8-1
1.8.1 INTRODUCTION 1.8-1
1.8.2 NUCLEAR STEAM SUPPLY SYSTEM SCOPE OF SUPPLY EVALUATION 1.8-1
1.8.3 BALANCE OF PLANT SCOPE OF SUPPLY EVALUATION 1.8-87

Chapter 1

INTRODUCTION AND GENERAL DESCRIPTION OF PLANT

LIST OF TABLES

Number	Title	Page
1.2-1	Principal Regulations and Codes Followed in Plant Design	1.2-39
1.2-2	Plant Shielding and Zone Classification	1.2-40
1.3-1	Comparison of Nuclear Steam Supply System Design Characteristics	1.3-3
1.3-2	Comparison of Power Conversion System Design Characteristics	1.3-9
1.3-3	Comparison of Engineered Safety Features Design Characteristics	1.3-10
1.3-4	Comparison of Containment Design Characteristics	1.3-12
1.3-5	Radioactive Waste Management Systems Design Characteristics	1.3-14
1.3-6	Comparison of Structural Design Characteristics	1.3-15
1.3-7	Comparison of Electrical Systems Design Characteristics	1.3-16
1.3-8	Significant Design Changes from PSAR to FSAR	1.3-17
1.4-1	Commercial Nuclear Reactors Completed, Under Construction, or in Design by General Electric	1.4-5
1.6-1	Topical Reports	1.6-3

Chapter 1

INTRODUCTION AND GENERAL DESCRIPTION OF PLANT

LIST OF FIGURES

Number	Title
1.2-1	Plant Plot Plan
1.2-2	General Arrangement - Ground Floor Plan, Turbine Generator Building (Sheets 1 and 2)
1.2-3	General Arrangement - Mezzanine Floor Plan, Turbine Generator Building (Sheets 1 and 2)
1.2-4	General Arrangement - Operating Floor Plan, Turbine Generator Building (Sheets 1 and 2)
1.2-5	General Arrangement - Sections 2-2, 4-4 and 5-5, Turbine Generator Building
1.2-6	General Arrangement - Sections 1-1 and 3-3, Turbine Generator Building
1.2-7	General Arrangement - El. 422 ft 3 in., El. 441 ft 0 in., and 444 ft 0 in., Reactor Building
1.2-8	General Arrangement - El. 471 ft 0 in. and El. 501 ft 0 in., Reactor Building
1.2-9	General Arrangement - El. 522 ft 0 in. and El. 548 ft 0 in., Reactor Building
1.2-10	General Arrangement - El. 572 ft 0 in. and El. 606 ft 10-1/2 in., Reactor Building
1.2-11	General Arrangement - Section 10-10, Reactor Building
1.2-12	General Arrangement - 8-8 and 9-9, Reactor Building
1.2-13	General Arrangement - El. 437 ft 0 in., Radwaste Building
1.2-14	General Arrangement - El. 467 ft 0 in. and Partial Plans, Radwaste Building
1.2-15	General Arrangement - El. 484 ft 0 in., El. 487 ft 0 in., and Partial Plans, Radwaste Building

Chapter 1

INTRODUCTION AND GENERAL DESCRIPTION OF PLANT

LIST OF FIGURES (Continued)

Number	Title
1.2-16	General Arrangement - El. 501 ft 0 in., 507 ft 0 in., and 525 ft 0 in., Radwaste Building
1.2-17	General Arrangement - Radwaste Building Sections (Sheets 1 and 2)
1.2-18	General Arrangement - Service Building
1.2-19	General Arrangement - Service Building Sections
1.2-20	General Arrangement - Standby Service Water Pump Houses Sections
1.2-21	General Arrangement - Circulating Water Pump House Sections
1.2-22	General Arrangement - Diesel Generator and Service Building Sections
1.2-23	General Arrangement - Makeup Water Pump House, Plans and Sections
1.2-24	General Arrangement - Makeup Water Pump House, Plans and Sections
1.2-25	General Electric Piping and Instrumentation Drawing Symbols
1.2-26	Flow Diagram Legend, Symbols and Abbreviations
1.2-27	System Acronyms
1.2-28	Equipment Acronyms (Sheets 1 and 2)
1.2-29	Logic Symbols for NSSS Functional Control Diagrams (Sheets 1 through 15)

Chapter 1

INTRODUCTION AND GENERAL DESCRIPTION OF PLANT

1.1 INTRODUCTION

This Final Safety Analysis Report (FSAR) was submitted in support of an application by Energy Northwest for a Class 103 operating license for a single unit nuclear power plant. The facility is known as the Columbia Generating Station (CGS) and was formerly known as WNP-2.

Energy Northwest was the applicant for the operating license for CGS. The plant was designed, constructed, and is being operated under the responsibility of Energy Northwest.

CGS is located within the Hanford Site of the Department of Energy (DOE), Benton County, Washington, approximately 12 miles north of the City of Richland. The site is approximately 3 miles west of the Columbia River at River Mile 352.

This plant has a boiling water reactor (BWR) nuclear steam supply system (NSSS) designed and supplied by the General Electric Company (GE). The plant utilizes a single-cycle, forced-circulation system and is designated as a BWR/5.

The containment was designed by Burns and Roe, Inc., and consists of primary and secondary containment systems. The primary containment structure is a free-standing steel pressure vessel of a specific design by Pittsburgh Des Moines Steel Co. The vessel contains both a drywell and a suppression chamber, which is consistent with the features of a BWR/Mark II containment.

The secondary containment structure is composed of the reactor building, which completely encloses primary containment.

The authorized maximum rated power level limit of the reactor is 3544 MWt. The design power level limit is 3629 MWt. The net electrical power output is approximately 1190 MWe and the gross electrical output is 1230 MWe.

Energy Northwest was granted an operating license for CGS on December 20, 1983, and the plant began commercial operation on December 13, 1984.

1.2 GENERAL PLANT DESCRIPTION

1.2.1 PRINCIPAL DESIGN CRITERIA

The principal design criteria are presented in two ways. First, they are classified as either a power generation function or a safety function. Second, they are grouped according to system. Although the distinctions between power generation or safety functions are not always clear-cut and are sometimes overlapping, the functional classification facilitates safety analyses, while the grouping by system facilitates the understanding of both the system function and design.

1.2.1.1 General Design Criteria

1.2.1.1.1 Power Generation Design Criteria

a. The plant was designed so that it can be fabricated, erected, and operated to produce electric power in a safe and reliable manner. Plant design conforms to applicable codes and regulations as stipulated in Table 1.2-1;

b. The plant is designed to produce steam for direct use in a turbine-generator unit;

c. Heat removal systems are provided with sufficient capacity and operational adequacy to remove heat generated in the reactor core for the full range of normal operational conditions and abnormal operational transients;

d. Backup heat removal systems are provided to remove decay heat generated in the core under circumstances wherein the normal operational heat removal systems become inoperative. The capacity of such systems is adequate to prevent fuel cladding damage;

e. The fuel cladding, in conjunction with other plant systems is designed to retain integrity throughout the range of normal operational conditions and abnormal operational transients;

f. The fuel cladding can accommodate, without loss of integrity, the pressures generated by fission gases released from fuel material throughout the design life of fuel;

g. Control equipment has been provided to allow the reactor to respond automatically to minor load changes, major load changes, and abnormal operational transients;

h. Reactor power level can be manually controlled;

i. Control of the reactor is possible from a single location;

j. Reactor controls, including alarms, are arranged to allow the operator to rapidly assess the condition of the reactor system and locate system malfunctions; and

k. Interlocks or other automatic equipment are provided as backup to procedural controls to avoid conditions requiring the functioning of nuclear safety systems or engineered safety features (ESF).

1.2.1.1.2 Safety Design Criteria

a. The plant design conforms to applicable codes and regulations;

b. The plant is designed, fabricated, erected, and will be operated in such a way that the release of radioactive materials to the environment is limited to the limits and guideline values of applicable federal regulations pertaining to the release of radioactive materials for normal operations and abnormal transients and accidents;

c. The reactor core is designed so its nuclear characteristics do not contribute to a divergent power transient;

d. The reactor is designed so there is no tendency for divergent oscillation of any operating characteristic, considering the interaction of the reactor with other appropriate plant systems;

e. Gaseous, liquid, and solid waste disposal facilities are designed so the discharge and offsite shipment of radioactive effluents can be made in accordance with applicable regulations;

f. The design provides means by which plant operators can be informed when limits on the release of radioactive material are approached;

g. Sufficient indications are provided to allow determination that the reactor is operating within the envelope of conditions considered by plant safety analysis;

h. Radiation shielding is provided and access control patterns have been established to allow a properly trained operating staff to control radiation doses within the limits of applicable regulations in any mode of normal plant operations;

i. Those portions of the nuclear system that form part of the reactor coolant pressure boundary (RCPB) are designed to retain integrity as a radioactive material barrier following abnormal operational transients and accidents;

j. Nuclear safety systems and ESF act to ensure that no damage to the RCPB results from internal pressures caused by abnormal operational transients and accidents;

k. Where positive, precise action is immediately required in response to abnormal operational transients and accidents, such action is automatic and requires no decision or manipulation of controls by plant operations personnel;

l. Essential safety actions can be carried out by equipment of sufficient redundance and independence such that no single failure of active components can prevent the required actions. For systems or components to which IEEE-279 (Criteria for Protection Systems for Nuclear Power Generating Stations) and/or IEEE-308 (Criteria for Class 1E Electrical systems for Nuclear Power Generating Stations) applies, single failures of both active and passive electrical components were considered in recognition of the higher anticipated failure rates of passive electrical components relative to passive mechanical components;

m. Provisions have been made for control of active components of nuclear safety systems and ESF from the control room;

n. Nuclear safety systems and ESF are designed to permit demonstration of their functional performance requirements;

o. The design of nuclear safety systems and ESF includes allowances for natural environmental disturbances such as earthquakes, tornadoes, floods, and storms at the site;

p. Standby electrical power sources have sufficient capacity to power all nuclear safety systems and ESF requiring electrical power;

q. Standby electrical power sources are provided to allow prompt reactor shutdown and removal of decay heat under circumstances where offsite power sources are not available;

r. Features of the plant that are essential to the mitigation of accident consequences are designed, fabricated, and erected to quality standards that reflect the importance of the safety action to be performed;

s. A primary containment has been provided that completely encloses the reactor system, drywell, and suppression pool. The primary containment employs the pressure suppression concept;

t. The primary containment is designed to retain integrity as a radioactive material barrier during and following accidents that release radioactive material into the primary containment volume;

u. It is possible to test primary containment integrity and leaktightness at periodic intervals;

v. A secondary containment has been provided that completely encloses both the primary containment and fuel storage areas. The secondary containment includes the standby gas treatment (SGT) system for controlling release of radioactive materials leaking from the primary containment in the event of an accident and also has the capability for filtering radioactive materials directly from the primary containment atmosphere during shutdown conditions;

w. The secondary containment has been designed to act as a radioactive material barrier, if required, when the primary containment is open for expected operational purposes;

x. The primary containment and secondary containment, in conjunction with other ESF, limit radiological effects of accidents resulting in the release of radioactive material to the containment vessel to significantly less than 10 CFR 50.67 limits;

y. Provisions have been made for removing energy from within the containment vessel as necessary to maintain the integrity of the containment system following accidents that release energy to the primary containment;

z. Piping that penetrates the primary containment structure and could serve as a path for the uncontrolled release of radioactive material to the environs is automatically isolated whenever such uncontrolled radioactive material release is threatened. Such isolation shall be effected in time to limit radiological effects to less than specified acceptable limits;

aa. Emergency core cooling systems (ECCS) are provided to limit fuel cladding temperature to temperatures below the onset of fragmentation in the event of a loss-of-coolant accident (LOCA);

bb. The ECCS provide for continuity of core cooling over the complete range of postulated break sizes in the RCPB and are redundant;

cc. Operation of the ECCS is initiated automatically when required, regardless of the availability of offsite power supplies and the normal generating system of the plant;

dd. The control room has been shielded against radiation and provided with a high efficiency filtration system so that continued occupancy under accident conditions is possible;

ee. In the event that the control room becomes inaccessible, it is possible to bring the reactor from power range operation to cold shutdown conditions by utilizing the local controls and equipment that are available outside the control room on the remote shutdown control panels;

ff. Backup reactor shutdown capability has been provided independent of normal reactivity control provisions. This backup system has the capability to shut down the reactor from any normal operating condition and subsequently to maintain the shutdown condition; and

gg. Fuel handling and storage facilities are designed to prevent inadvertent criticality and to maintain adequate shielding and cooling of spent fuel. Provision is made for maintaining the cleanliness of spent fuel cooling and shielding water.

1.2.1.2 System Criteria

The principal design criteria for particular systems are listed in the following subsections.

1.2.1.2.1 Nuclear System Criteria

a. The fuel cladding is designed to retain integrity as a radioactive material barrier throughout the design power range. The fuel cladding is designed to accommodate, without loss of integrity, the pressures generated by the fission gases released from the fuel material throughout the design life of the fuel;

b. The fuel cladding, in conjunction with other plant systems, is designed to retain integrity throughout any abnormal operational transient;

c. Those portions of the nuclear system that form part of the RCPB are designed to retain integrity as a radioactive material barrier following abnormal operational transients and accidents;

d. Heat removal systems are provided in sufficient capacity and operational adequacy to remove heat generated in the reactor for the full range of normal operational conditions from plant shutdown to design power and for any abnormal operational transient. The capacity of such systems is adequate to prevent fuel cladding damage;

e. Heat removal systems are provided to remove decay heat generated in the core under circumstances wherein the normal operational heat removal systems become inoperative. The capacity of such systems is adequate to prevent fuel cladding damage. The reactor is capable of being automatically shut down in sufficient time to permit decay heat removal systems to become effective following loss of operation of normal heat removal systems;

f. The reactor core and reactivity control system is designed so that control rod action is capable of bringing the core subcritical and maintaining it so, even with the rod of highest reactivity worth fully withdrawn and unavailable for insertion;

g. The reactor core is designed so that its nuclear characteristics do not contribute to a divergent power transient; and

h. The nuclear system is designed so there is no tendency for divergent oscillation of any operating characteristic, considering the interaction of the nuclear system with other appropriate plant systems.

1.2.1.2.2 Power Conversion System Criteria

Components of the power conversion system have been designed to perform the following basic objectives.

a. Produce electrical power from the steam exiting from the reactor, condense the steam into water, and return the water to the reactor as heated feedwater, with a major portion of its gaseous and particulate impurities removed; and

b. Ensure that any fission products or radioactivity associated with the steam and condensate during normal operation are safely contained inside the system or are released under controlled conditions in accordance with waste disposal procedures.

1.2.1.2.3 Electrical Power Systems Criteria

Sufficient offsite and onsite standby sources of electrical power are provided to attain prompt shutdown and continued maintenance of the plant in a safe condition under all credible

circumstances. The power sources are adequate to accomplish all required engineered safety feature functions under postulated design basis accident conditions.

1.2.1.2.4 Radwaste System Criteria

a. The gaseous and liquid radwaste systems are designed to limit the release of radioactive effluents from the plant during normal operation within those limits specified in 10 CFR 20 and 10 CFR 50, Appendix I;

b. The solid radwaste disposal system is designed so that during normal operation offsite shipments will be in accordance with applicable regulations, including 10 CFR 20, 10 CFR 71, and 49 CFR 171 through 10 CFR 179, as appropriate; and

c. The design of the systems provide means by which plant operations personnel are alerted whenever operational limits on the release of radioactive material are approached.

1.2.1.2.5 Auxiliary Systems Criteria

a. Fuel handling and storage facilities are designed to prevent criticality and to maintain adequate shielding and cooling for spent fuel. Provision is made for maintaining the cleanliness of spent fuel cooling and shielding water;

b. Other auxiliary systems, such as standby service water (SW), high pressure core spray (HPCS) SW, fire protection (FP), heating and ventilating, communications, and lighting systems, are designed to function during normal, abnormal, and/or accident conditions; and

c. Auxiliary systems that are not required to effect safe shutdown of the reactor or maintain it in a safe shutdown condition are designed such that failure of these systems shall not prevent the essential auxiliary systems from performing their design functions.

1.2.1.2.6 Shielding and Access Control Criteria

a. Radiation shielding is provided and access control patterns are established to allow a properly trained operating staff to control radiation doses within the limits of published regulations in any normal mode of plant operation; and

b. The control room is shielded against radiation and has a high efficiency filtration system, so that occupancy is possible under accident conditions and

TEDE doses are less than those set by Criterion 19 of 10 CFR Part 50, Appendix A and 10 CFR 50.67.

1.2.1.2.7 Nuclear Safety Systems and ESF Criteria

Principal design criteria for nuclear safety systems and ESF correspond to criteria j through q, aa through cc, and ee through ff in Section 1.2.1.1.2.

1.2.1.2.8 Process Control Systems Criteria

The principal design criteria for the process control systems are listed for the nuclear system, the power conversion system, and the electrical power system:

a. Nuclear System Process Control Criteria

1. Control equipment is provided to allow the reactor to respond automatically to load changes within design limits.

2. It is possible to manually control the reactor power level.

3. Control of the reactor is possible from a central location.

4. Nuclear systems process controls and alarms are arranged to allow the operator to rapidly assess the condition of the nuclear system and to locate process system malfunctions.

5. Interlocks or other automatic equipment are provided as a backup to procedural controls to avoid conditions requiring the actuation of nuclear safety systems or ESF.

b. Power Conversion System Process Control Criteria

1. Control equipment is provided to control the reactor pressure throughout its operating range.

2. The turbine is able to respond automatically to minor changes in load.

3. Control equipment in the feedwater system maintains the water level in the reactor vessel at the optimum level required by steam separators.

4. Control of the power conversion equipment is possible from a central location.

5. Interlocks or other automatic equipment are provided in addition to procedural controls to avoid conditions requiring the actuation of ESF.

c. Electrical Power System Process Control Criteria

1. The redundant portions of the Class 1E power systems are designed with either division of the system being adequate to safely shut down the unit.

2. Protective relaying is used to detect and isolate faulted equipment from the system with a minimum of disturbance in the event of equipment failure.

3. Primary and secondary undervoltage relays are located on the 4.16-kV Class 1E equipment buses to isolate these buses from the normal auxiliary power system in the event of Class 1E bus under voltage and to initiate starting of the standby power system diesel generators.

4. Standby power diesel generators' start is initiated by control relays. The generators are also loaded by a sequenced control system to meet the existing emergency condition.

5. All electrically operated breakers can be operated from the main control room.

6. Metering for essential generators, transformers, and circuits is monitored in the main control room.

1.2.1.3 Plant Design Criteria

The plant design criteria are based on general design criteria given in Appendix A of 10 CFR Part 50. Conformance to these criteria is discussed in Section 3.1. The classification of structures, components, and systems is discussed in Section 3.2.

The principal regulations are codes that are used extensively in plant design are highlighted in Table 1.2-1. Note that the codes listed may not be applicable in their entirety. The many codes and regulations applicable to individual systems or structures are discussed throughout the FSAR.

The plant shielding and radiation zone classification can be found in Table 1.2-2. Chapter 12 provides further details.

1.2.2 PLANT DESCRIPTION

1.2.2.1 Site Characteristics

1.2.2.1.1 Site Location and Size

Columbia Generating Station (CGS) is located in the southeast area of the Department of Energy (DOE) Hanford Reservation in Benton County, Washington. The site is approximately 3 miles west of the Columbia River at River Mile 352, approximately 12 miles north of the City of Richland, 18 miles northwest of Pasco, and 21 miles northwest of Kennewick. The site is approximately square shaped with a corridor extending to the makeup water pump house located on the Columbia River as shown in Figure 1.2-1. The CGS site encompasses an area of approximately 1089 acres.

1.2.2.1.2 Description of Site Environs

1.2.2.1.2.1 Site Land. See Section 2.1 for site land description.

1.2.2.1.2.2 Population. See Section 2.1 for population description.

1.2.2.1.2.3 Land Use. Natural physical characteristics of the site which make it well-suited for operation of the plant include: favorable geographical, geological, and seismological characteristics; adequate water supply; ideal climatological characteristics; and remoteness from population centers or areas of special ecological concern. The site area had served as a nuclear industrial center since 1943 when it was selected by the federal government as the location for construction of one of the world's first nuclear production reactors. Since 1943, nine plutonium production reactors and a number of test reactors have been constructed and operated at the Hanford Site.

1.2.2.1.2.4 Meteorology. The climate around CGS is basically continental with a wide range of annual temperatures. See Section 2.3 for additional information.

1.2.2.1.2.5 Hydrology. The Columbia River is the major surface water resource of the region. The river also forms a potential discharge boundary for the aquifer. The surface soils at Hanford are sufficiently permeable to take in water from precipitation and industrial discharges. See Section 2.4 for additional information.

1.2.2.1.2.6 Geology. The Hanford site lies in the east central part of the Pasco Basin, a structural and topographic depression in the Columbia Plateau. The region is underlain by three major geologic units: (a) Tertiary basaltic lavas and intercalated sediments of the Columbia River Group at the base, (b) Plio-Pleistocene sediments of the Ringold Formation, and (c) the Pasco (glaciofluvial) gravels and associated sediments of late Pleistocene age at the surface. See Section 2.5 for additional information.

1.2.2.1.2.7 Seismology. The CGS site is situated in an area characterized by low seismicity and widely scattered epicenters. See Section 2.5 for additional information.

1.2.2.1.3 Design Basis Depending on Site Environs

a. Offgas System

An offgas (OG) system consisting of hold-up piping, charcoal adsorbers, and an elevated release is provided for the controlled release of gaseous effluent to the atmosphere. Gaseous releases will be as low as reasonably achievable (ALARA) in accordance with 10 CFR Part 50, Appendix I, and less than 10 CFR Part 20 limits;

b. Liquid Waste Effluents

Liquid waste will be processed and recycled, and releases of excess inventory will be such that concentrations at the point of discharge will be as low as reasonably achievable in accordance with 10 CFR Part 50, Appendix I, and less than 10 CFR Part 20 limits;

c. Wind Loading and Seismic Design

The structures and components whose failure might cause a design basis accident or result in an uncontrolled release of radioactive fission products will be designed to resist wind loads of tornado velocity and earthquake ground motions which are significantly higher than those expected to occur at the site during the service life of the plant; and

d. Flooding

The maximum assumed flood elevation for design purposes is the sum total of the elevations of water due to the following effects:

1. Breach of any of the upstream dams due to seismic forces,
2. High flow in the Columbia River, and
3. Wind and wave action.

1.2.2.2 General Arrangement of Structures and Equipment

The principal structures located on the plant site are the following:

a. Reactor building - the building that houses the major portion of the nuclear steam supply system (NSSS), the drywell, suppression pool, primary containment, new and spent fuel pools, refueling equipment, and ECCS;

b. Radwaste and control building - the building that houses the liquid and solids radwaste systems, components of the OG system, and the main control room;

c. Turbine building - the building that houses the power conversion equipment;

d. Diesel generator building - the building that houses the standby diesel generators, diesel fuel oil (DO) storage tanks, and associated controls and instrumentation;

e. Circulating water pump house (Wind River Building) - a structure housing the main circulating water (CW) pumps, plant service water (TSW) pumps, and FP pumps;

f. Standby service water pump houses - structures that house the redundant standby SW pumps and the HPCS SW pump;

g. Spray ponds - cooling ponds provided as the ultimate heat sink (UHS);

h. Makeup water pump house - a structure that houses the cooling tower makeup (TMU) water pumps;

i. General service building (Yakima Building) - a structure that houses the potable water (PWC) storage tank, demineralized water (DW) storage tank, offices for plant administration, lunch room, and machine shop;

j. Transformer yard;

k. Condensate storage tanks (CSTs);

l. Cooling towers; and

m. Plant Engineering Center (Deschutes Building).

The arrangement of these structures on the plant site is shown in Figure 1.2-1. The arrangement of the equipment inside the main buildings is shown in Figures 1.2-2 through 1.2-24.

1.2.2.3 Symbols Used on Engineering Drawings

Figure 1.2-25 defines General Electric's (GE) piping and instrumentation symbols, and Figure 1.2-26 through 1.2-28 shows Burns and Roe piping and instrumentation symbols. Figure 1.2-29 defines the logic symbols used on NSSS functional control diagrams.

1.2.2.4 Nuclear System

The nuclear system includes a direct-cycle, forced-circulation, GE boiling water reactor (BWR) that produces steam for direct use in the steam turbine. A heat balance showing the major parameters of the nuclear system for the rated power conditions is shown in Figure 10.1-1.

1.2.2.4.1 Reactor Core and Control Rods

Fuel for the reactor core consists of slightly enriched uranium dioxide pellets sealed in Zircaloy-2 tubes. These tubes (or fuel rods) are assembled into individual fuel assemblies. Gross control of the core is achieved by movable, bottom-entry control rods. The control rods are cruciform in shape and are dispersed throughout the lattice of fuel assemblies. The control rods are positioned by individual control rod drives (CRDs).

Each fuel assembly has several fuel rods with gadolinia (Gd_2O_3) mixed in solid solution with UO_2. The Gd_2O_3 is a burnable poison which diminishes the reactivity of the fresh fuel. It is depleted as the fuel reaches the end of its first cycle.

A fuel design specific limit on cladding strain is the design criterion used for fuel rod cladding failure. The peak linear heat generation for steady-state operation is well below the fuel damage limit even late in life. Experience has shown that the control rods are not susceptible to distortion and have an average life expectancy many times the residence time of the fuel loading.

1.2.2.4.2 Reactor Vessel and Internals

The reactor vessel contains the core and supporting structures; the steam separators and dryers; the jet pumps; the control rod guide tubes; the distribution lines for reactor feedwater (RFW), HPCS, low-pressure core spray (LPCS), and standby liquid control (SLC); the in-core instrumentation; and other components. The main connections to the vessel include main steam (MS) lines, reactor recirculation (RRC) lines, RFW lines, CRD and in-core nuclear instrument housings, HPCS and LPCS lines, residual heat removal (RHR) lines, SLC line,

core differential pressure line, jet pump pressure-sensing lines, and water level instrumentation.

The reactor vessel is designed and fabricated in accordance with applicable codes for a pressure of 1250 psig. The nominal operating pressure in the steam space above the separators is 1035 psia. The vessel is fabricated of low-alloy steel and is clad internally with stainless steel (except for the top head, and certain nozzles and nozzle weld zones which are unclad).

The reactor core is cooled by demineralized water that enters the lower portion of the core and boils as it flows upward around the fuel rods. The steam leaving the core is dried by steam separators and dryers located in the upper portion of the reactor vessel. The steam is then directed to the turbine through the MS lines. Each MS line is provided with two MS isolation valves (MSIVs) in series, one on each side of the primary containment barrier.

1.2.2.4.3 Reactor Recirculation System

The RRC system pumps reactor coolant through the core. This is accomplished by two recirculation loops external to the reactor vessel but inside the primary containment. Each external loop contains a mechanical pump, two motor-operated maintenance valves, and one flow control valve which is mechanically blocked full open. The two motor-operated valves are used as pump suction and pump discharge shutoff valves. The flow control valves are no longer used to control reactor power level and therefore are kept in a mechanically blocked full open position.

The internal portion of the loop consists of the jet pumps, which contain no moving parts. The jet pumps provide a continuous internal circulation path for the major portion of the core coolant flow. The jet pumps are located in the annular region between the core shroud and the vessel's inner wall. Any recirculation line break would still allow core flooding to approximately two-thirds of the core height, the level of the inlet of the jet pumps.

1.2.2.4.4 Residual Heat Removal System

The RHR system is a system of pumps, heat exchangers, and piping that fulfills the following functions:

a. Removes decay and sensible heat during and after plant shutdown;

b. Injects water into the reactor vessel, following a LOCA, rapidly enough to reflood the core and maintain fuel cladding below the fragmentation temperature independent of other core cooling systems. This is further discussed in Section 1.2.2.5.8;

c. Removes heat from the primary containment, following a LOCA, to limit the increase in primary containment pressure. This is accomplished by cooling and recirculating the suppression pool water (containment cooling) and by spraying the drywell and suppression pool air spaces (containment spray) with suppression pool water; and

d. Removes some of the airborne radioactivity from the primary containment atmosphere following a LOCA by spraying the drywell.

1.2.2.4.5 Reactor Water Cleanup System

The reactor water cleanup (RWCU) system recirculates a portion of reactor coolant through a filter-demineralizer to remove particulate and dissolved impurities from the reactor system under controlled conditions. It also removes excess coolant from the reactor system under controlled conditions.

1.2.2.4.6 Nuclear Leak Detection System

The nuclear leak detection (LD) system consists of temperature, pressure, flow, and fission-product sensors with associated instrumentation and alarms. This system detects and annunciates leakage in the following systems:

a. Main steam system,
b. Reactor water cleanup system,
c. Residual heat removal system,
d. Reactor core isolation cooling (RCIC) system,
e. Reactor feedwater system,
f. High-pressure core spray system,
g. Low-pressure core spray system,
h. Reactor recirculation system, and
i. Reactor pressure vessel (RPV) flange.

Small leaks generally are detected by temperature and pressure changes, fill-up rate of drain sumps, and fission-product concentration inside the primary containment. Large leaks are also detected by changes in reactor water level and changes in flow rates in process lines.

1.2.2.5 Nuclear Safety Systems and Engineered Safety Features

1.2.2.5.1 Reactor Protection System

The reactor protection system (RPS) initiates a rapid, automatic shutdown (scram) of the reactor, if required, to prevent fuel cladding damage or nuclear system process barrier damage following abnormal operational transients. The RPS overrides all operator actions and process

controls and is based on a fail-safe design philosophy that allows appropriate protective action even if a single component failure occurs.

1.2.2.5.2 Neutron Monitoring System

Although not all portions of the neutron monitoring system qualify as a nuclear safety system, those that provide high neutron flux signals to the RPS do. The intermediate range monitors (IRMs) and average power range monitors (APRMs), which monitor neutron flux via in-core detectors, signal the RPS to scram in time to prevent excessive fuel cladding damage as a result of overpower transients. The APRM modules also provide inputs to the thermal power monitors (TPMs) which approximate fuel thermal conditions and also provide scram signals to the RPS.

1.2.2.5.3 Control Rod Drive System

When a scram is initiated by the RPS, the CRD system inserts the negative reactivity necessary to shut down the reactor. Each control rod is controlled individually by a hydraulic control unit. When a scram signal is received, high-pressure water stored in an accumulator in the hydraulic control unit forces its control rod into the core.

1.2.2.5.4 Control Rod Drive Housing Supports

Control rod drive housing supports are located underneath the reactor vessel near the control rod housings. The supports limit the travel of a control rod in the event that a control rod housing is ruptured. The supports prevent a nuclear excursion as a result of a housing failure and thus protect the fuel barrier.

1.2.2.5.5 Control Rod Velocity Limiter

A control rod velocity limiter is attached to each control rod to limit the velocity at which a control rod can fall out of the core should it become detached from its CRD. This action limits the rate of reactivity insertion resulting from a rod drop accident. The limiters contain no moving parts.

1.2.2.5.6 Pressure Relief System (Nuclear System)

A pressure relief system consisting of safety/relief valves (SRVs) mounted on the MS lines is provided to prevent excessive pressure inside the nuclear system following either abnormal operational transients or accidents.

1.2.2.5.7 Reactor Core Isolation Cooling System

The RCIC system provides makeup water to the reactor vessel when the vessel is isolated. The RCIC system uses a steam-driven turbine-pump unit and operates automatically in time and with sufficient coolant flow to maintain adequate water level in the reactor vessel. RCIC is not an engineered safety feature. It is included here, however, because of its similar functions.

1.2.2.5.8 Emergency Core Cooling System

Four ECCS are provided to maintain fuel cladding below fragmentation temperature in the event of a breach in the RCPB that results in a loss of reactor coolant. The systems are

a. High-pressure core spray system,
b. Automatic depressurization system (ADS),
c. Low-pressure core spray system, and
d. Low-pressure coolant injection (LPCI), an operating mode of the RHR system.

1.2.2.5.8.1 High-Pressure Core Spray System. The HPCS system provides and maintains an adequate coolant inventory inside the reactor vessel to maintain fuel cladding temperatures below the fragmentation temperature in the event of breaks in the RCPB. The system is initiated by either high pressure in the drywell or low water level in the vessel. It operates independently of all other systems over the entire range of pressure differences from greater than normal operating pressure to zero. The HPCS cooling decreases vessel pressure to enable the low pressure cooling systems to function. The HPCS system is powered by its own diesel generator if auxiliary power is not available, and the system may also be used as a backup for the RCIC system.

1.2.2.5.8.2 Automatic Depressurization System. The ADS rapidly reduces reactor vessel pressure during a LOCA situation in which the HPCS system fails to maintain the reactor vessel water level. The depressurization provided by the system enables the low pressure ECCS to deliver cooling water to the reactor vessel. The ADS uses some of the relief valves that are part of the nuclear system pressure relief system. The automatic relief valves are arranged to open when conditions indicate that the HPCS system is not delivering sufficient cooling water to the reactor vessel to maintain the water level above a preselected value. The ADS will not be activated unless either the LPCS or LPCI pumps are operating. This is to ensure that adequate coolant will be available to maintain reactor water level after the depressurization.

1.2.2.5.8.3 Low-Pressure Core Spray System. The LPCS system consists of one independent pump and the valves and piping to deliver cooling water to a spray sparger over the core. The system is actuated by conditions indicating that a breach exists in the RCPB but water is delivered to the core only after reactor vessel pressure is reduced. This system provides the capability to cool the fuel by spraying water into each fuel channel. The LPCS loop

functioning in conjunction with either the ADS or HPCS can maintain the fuel cladding below the prescribed temperature following a LOCA.

1.2.2.5.8.4 Low-Pressure Coolant Injection. The LPCI is an operating mode of the RHR system, but is discussed here because the LPCI mode acts as an engineered safety feature in conjunction with other ECCS. The LPCI uses the pump loops of the RHR to inject cooling water directly into the pressure vessel. The LPCI is actuated by conditions indicating a breach in the RCPB, but water is delivered to the core only after reactor vessel pressure is reduced. The LPCI operation provides the capability of core reflooding, following a LOCA, in time to maintain the fuel cladding below the prescribed temperature limit.

1.2.2.5.9 Primary Containment

1.2.2.5.9.1 Functional Design. The primary containment is part of the overall containment system which provides the capability to reliably limit the release of radioactive materials to the environs subsequent to the occurrence of the postulated LOCA so that offsite doses will be below the limits stated in 10 CFR Part 50.67. Its design employs an over-and-under, steel pressure vessel which houses the reactor vessel, the RRC loops, and other branch connections of the reactor primary system. The pressure suppression system consists of a drywell, a pressure suppression chamber which stores a large volume of water, a connecting submerged vent system between the drywell and water pool, isolation valves, containment cooling system, and other service equipment. In the event of a RCPB piping failure within the drywell, reactor water and steam would be released into the drywell air space. The resulting increase of drywell pressure would then force a mixture of air, steam, and water through the vents into the pool of water which is stored in the suppression pool, resulting in a rapid pressure reduction in the drywell. Air which is transferred to the suppression chamber, pressurizes the suppression chamber, and is subsequently vented back to the drywell.

1.2.2.5.9.2 Drywell Cooling System. The drywell cooling system is based on recirculating cooling water through the drywell air-handling units to maintain the required ambient temperature. Air is distributed through ductwork and/or up through the annular space between the reactor vessel insulation and the sacrificial shield wall. Air is distributed to areas requiring cooling, such as the RRC motors, the CRD area, and the bellows area. Return air is ducted back to the operating units. The arrangement simplifies the design, operation, and air distribution balance of the system.

Reactor building closed cooling water (RCC) is supplied to the air handling units to dissipate absorbed heat only under normal and loss of power conditions.

The drywell cooling system is not required for safe shutdown, but it is designed with redundant equipment and powered from essential buses to ensure continuous operation to satisfy the power-generation design objective.

The drywell cooling system is designed to operate during offsite power loss. Control switches for operating the equipment are located in the main control room.

1.2.2.5.9.3 Suppression Pool Cooling. The containment cooling subsystem of the RHR system is placed in operation to limit the temperature of the water in the suppression pool following a design basis LOCA, to control the pool temperature during normal operation of the SRVs and the RCIC system, and to reduce the pool temperature following an isolation transient. In the containment cooling mode of operation, the RHR main system pumps take suction from the suppression pool and pump the water through the RHR heat exchangers where cooling takes place by transferring heat to SW. The fluid is then discharged back to the suppression pool or the RPV.

1.2.2.5.9.4 Containment Spray. The redundant containment spray cooling subsystems of the RHR system provide containment cooling for postaccident conditions. Water pumped through the RHR heat exchangers can be diverted to spray headers in the drywell and above the suppression pool. The spray removes energy from the drywell atmosphere by condensing the water vapor. The drywell spray also removes particulate fission product from the drywell atmosphere. Approximately 5% of this flow can be directed to the suppression chamber to cool the gas above the water surface.

1.2.2.5.9.5 Containment Atmosphere Control. In the event of a LOCA, hydrogen and oxygen will be generated in the reactor. Containment atmosphere control is provided by inerted containment, containment atmosphere mixing, and hydrogen and oxygen monitoring in a post-LOCA event.

1.2.2.5.10 Primary Containment and Reactor Vessel Isolation System

The primary containment and reactor vessel isolation system includes sensors, trip channels, control switches and remotely activated valve closing mechanisms associated with the valves, which, when closed, effect isolation of the primary containment or reactor vessel or both.

The purpose of the system is to provide timely protection against the onset and consequences of accidents involving the gross release of radioactive materials from the fuel and the nuclear system process barrier. The primary containment and reactor vessel isolation control system initiates automatic isolation of the RCPB and the primary containment vessel whenever monitored variables exceed preselected operation limits.

All pipelines that both penetrate the primary containment and offer a potential release path for radioactive material are provided with redundant isolation capabilities.

1.2.2.5.11 Main Steam Line Isolation Valves

Although all pipelines that both penetrate the containment and offer a potential release path for radioactive material are provided with redundant isolation capabilities, the main steam lines, because of their large size and large mass flow rates, are given special isolation consideration. Automatic MSIVs are provided in each MS line. Each is powered by both air pressure and spring force. These valves fulfill the following objectives:

a. Prevent excessive damage to the fuel barrier by limiting the loss of reactor coolant from the reactor vessel resulting from either a major leak from the steam piping outside the primary containment or from a malfunction of the pressure control system resulting in excessive steam flow from the reactor vessel,

b. Limit the release of radioactive materials (i.e., iodine spiking) by isolating the RCPB in case of a rapid depressurization of RPV and resulting release of radioactive materials from the fuel to the reactor cooling water and steam, and

c. Limit the release of radioactive materials by closing the primary containment barrier in case of a major leak from the nuclear system inside the primary containment.

1.2.2.5.12 Main Steam Line Flow Restrictors

A venturi-type flow restrictor is installed in each MS line. These devices limit the loss-of-coolant from the reactor vessel before the MSIVs are closed in case of an MS line break outside the primary containment.

1.2.2.5.13 Main Steam Line Radiation Monitoring System

The main steam line radiation monitoring system consists of four gamma radiation monitors located externally to the main steam lines just outside the containment. The monitors are designed to detect a gross release of fission products from the fuel. On detection of high radiation, the trip signals generated by the monitors are used to initiate a closure to the reactor water sample valves, mechanical vacuum pump trip, the mechanical vacuum pump lines isolation, and alarms.

1.2.2.5.14 Standby Service Water and High-Pressure Core Spray Service Water Systems

The SW system consists of two completely redundant systems. Each system consists of a pump and piping supplying the associated RHR system heat exchanger, standby diesel generator, essential heating, ventilating, and air conditioning (HVAC) coolers, RHR pump seal coolers, SW motor bearing coolers, and sample coolers with safety grade cooling water from

the UHS spray ponds. The Division I SW system also provides cooling water to the LPCS motor bearing cooler.

Cooling water is supplied during a postulated LOCA to the RHR heat exchangers to remove heat when the containment cooling mode of the RHR system is placed in operation. During normal operation, SW is also supplied to the RHR heat exchangers for the shutdown function of the RHR system.

The SW is available to the shell side of the fuel pool cooling and clean up (FPC) system heat exchangers in the event that the normal cooling water supply from the RCC system becomes unavailable.

The HPCS SW system shares spray pond A with the SW system. The pump supplies cooling water to the HPCS diesel generator and the essential HVAC coolers for the HPCS diesel generator and HPCS pump areas.

Cooling water is supplied to all diesel generator cooling systems whenever the diesel generators are started.

1.2.2.5.15 Reactor Building - Secondary Containment

The reactor building completely surrounds the primary containment. The building provides secondary containment when the primary containment is closed and in service. The reactor building also houses refueling and reactor servicing equipment, new and spent fuel storage facilities, and other reactor safety and auxiliary systems. Secondary containment is not required during movement of irradiated fuel assemblies or core alterations.

The design of the reactor building includes provisions for seismic load resistance and low infiltration and exfiltration rates. The building consists of poured-in-place, reinforced-concrete exterior walls up to the refueling floor. Above this level, the building structure is steel frame with insulated metal siding with sealed joints. Access to the building is through interlocked double doors.

1.2.2.5.16 Reactor Building Ventilation Exhaust Radiation Monitoring System

The reactor building ventilation exhaust radiation monitoring system consists of a number of radiation monitors arranged to monitor the activity level of the ventilation exhaust from the reactor building and primary containment. Upon detection of high radiation, the reactor building is automatically isolated and the SGT system is started.

1.2.2.5.17 Standby Gas Treatment System

The SGT system consists of two identical filter trains. Each filter train consists of a filter unit, two fans, ductwork, and associated valves.

Either filter train may be considered as an installed spare with the other train capable of passing the required amount of air. Either train alone is capable of exchanging the total reactor building volume once in a 24 hr period.

Each filter unit contains electric heaters, a prefilter, high-efficiency particulate filters (water and fire resistant), an iodine filter (high ignition temperature), and instrumentation to measure temperature and flow.

The system maintains a slightly negative internal building pressure and can process all gaseous effluent prior to its discharge from the reactor building.

All equipment is connected to the essential buses and is started either automatically or manually from the main control room.

1.2.2.5.18 Standby Alternating Current Power Supply System

The standby ac power supply system consists of two diesel generator sets, switchgear, and associated distribution system equipment and auxiliaries.

These diesel generator sets are associated with redundant (Divisions 1 and 2) separation divisions; each diesel generator set serves a particular division. The capacity of each diesel generator set is sufficient to attain shutdown under both normal and LOCA conditions, in the event that both the offsite and the normal auxiliary power sources are unavailable to supply plant loads. Since load distribution is such that redundant auxiliary systems are separated by division, safe shutdown can be achieved with only one of the two diesel generators operating.

The standby ac power supply system diesel generators and associated equipment are designed to Class 1E standards and are located within Seismic Category I structures. Equipment of each division is separated so that failure of any component of one division will not jeopardize proper functioning of the other division.

Although it is not a part of the standby ac power supply system, another independent diesel generator unit supplies ac power exclusively to the HPCS system (see Section 1.2.2.5.8.1) in the event that both the offsite and the normal auxiliary power sources are unavailable to supply plant loads.

The HPCS diesel generator may also be cross connected to either Division 1 or to Division 2 as described in Section 8.3.1.1.7.2.1.

1.2.2.5.19 Direct Current Power Supply System

The dc power supply system consists of station batteries, battery chargers, distribution equipment, and related auxiliaries.

The dc system furnishes power at three voltage levels: 250 V, 125 V, and +24 V. The 250-V and 125-V subsystems supply power to both Class 1E and non-Class 1E loads; the 24-V subsystem supplies power for the startup range and power range neutron monitoring systems.

The primary power sources for the system are the dc output station battery chargers. Station batteries associated with each charger operate in a "float-charge" configuration to ensure maintaining the batteries in a fully charged condition. In the event of loss of charger dc output, the station batteries furnish a secondary source of dc supply.

The 125-V and +24-V dc power supply subsystems are each divided into electrically and physically independent divisions. Each battery, together with its independent battery charger, is associated with one of the segregated divisions. The batteries and their associated chargers are located in separate rooms.

The ampere-hour capacity of each battery is capable of supplying all essential loads for a minimum of 2 hr in the event that dc output from the battery chargers is lost.

1.2.2.5.20 Standby Liquid Control System

Although not intended to provide prompt reactor shutdown, as the control rods are, the Standby Liquid Control (SLC) system provides a redundant, independent, and alternate method to bring the nuclear fission reaction to subcriticality and to maintain a subcritical condition as the reactor cools. The system makes possible an orderly and safe shutdown in the event that not enough control rods can be inserted into the reactor core to accomplish shutdown in the normal manner. The system is sized to counteract the positive reactivity effect from rated power to the cold, clean shutdown condition.

The SLC system is also used to maintain the suppression pool pH greater than 7.0 following a LOCA to minimize re-evolving gaseous iodine fission products to the containment atmosphere.

1.2.2.5.21 Safe Shutdown from Outside the Main Control Room

In the event that the control room becomes inaccessible, the reactor can be brought from power range operation to cold shutdown conditions by the use of local controls and equipment that are available outside the control room.

1.2.2.5.22 Main Steam Line Isolation Valve Leakage Control System (Deactivated)

The main steam line isolation valve leakage control (MSLC) system was designed to minimize the fission products which could bypass the SGT system after a LOCA. The MSLC system is not credited for accident mitigation and is no longer needed; MSLC is administratively de-activated. Connections between MSLC and other systems are physically isolated, MSLC components are de-energized, closed, or otherwise taken out of service.

1.2.2.5.23 Fuel Pool Cooling and Cleanup System

The FPC system provides for the removal of decay heat from stored spent fuel and maintains specified water temperature, purity, clarity, and level. This prevents boiling of the pool water and controls the buildup of excessive radioactive materials in the cooling water, thereby minimizing potential radiation exposure to plant personnel. The cooling portion of the system is designed to Seismic Category I requirements and may be isolated from the Seismic Category II cleanup portion of the system by automatic Seismic Category I isolation valves which actuate on low-fuel pool water level. Normally the RCC system furnishes non-safety grade cooling water to the FPC system. If required, safety grade cooling and makeup water is available to the FPC system from the SW system.

1.2.2.5.24 Hardened Containment Vent (HCV) System

The HCV system is designed to meet the requirements of NRC Order EA-13-109. The primary design objective of the HCV system is to provide sufficient venting capacity from the wetwell to prevent an overpressure failure of the containment by maintaining containment pressure below the primary containment design pressure and the primary containment pressure limit (PCPL). The HCV system is designed to operate during severe accident conditions which include the elevated temperatures, pressures, radiation levels, and concentrations of combustible gases such as hydrogen and carbon monoxide associated with accidents involving extensive core damage, including accidents involving a breach of the reactor vessel by molten core debris.

The HCV system is designed as a stand-alone system that can function without the support of other plant systems. Other than the two containment isolation valves, the remaining components such as the dedicated nitrogen and battery systems and control room and remote operating stations or instrumentation are not discussed or assumed in mitigating any Chapter 15 accidents.

1.2.2.6 Power Conversion System

1.2.2.6.1 Turbine Generator

The turbine is an 1800 rpm, tandem-compound (one double-flow high-pressure turbine and three double-flow low-pressure turbines), reheat unit with an electrohydraulic governor for

normal operation. The turbine generator is provided with an emergency trip system for turbine overspeed. The rating of the turbine generator is 1,173,046 kW.

The generator is a direct-driven, three-phase, 60 Hz, 25,000 V, 1800 rpm, hydrogen inner-cooled, synchronous generator rated at 1,230 MVA at 0.975 power factor, 0.58 short circuit ratio at a maximum hydrogen pressure of 78 psig.

1.2.2.6.2 Main Steam System

The MS system consists of four 26-in. diameter lines (which expand to 30-in. diameter lines inside the turbine building) extending from the outermost MSIVs to the main turbine stop valves. The use of four main steam lines permits testing of the turbine stop valves and MSIVs during station operation with only a minimum of load reduction. The design pressure and temperature of the MS system from the outermost MSIV to the turbine stop valve is 1250 psig at 575°F. Other features include drains and parts of the turbine bypass system.

1.2.2.6.3 Main Condenser

The main condenser is a triple-pressure, single-pass, deaerating-type condenser with a divided water box. The condenser includes provisions for accepting up to 25% of the MS flow at design conditions from the turbine bypass system and serves as a heat sink for several other flows, such as exhaust steam from the RFW pump turbines, cascading heater drains, feedwater heater shell operating vents, and condensate pump suction vents.

1.2.2.6.4 Main Condenser Evacuation System

The main condenser evacuation system is designed to remove noncondensable gases from the condenser, including air inleakage and dissociation products originating in the reactor, and to continuously exhaust them to the gaseous radwaste system during operation. The system consists of two 100%-capacity, twin-element first stage and single-element second stage steam jet air ejector units complete with intercondensers for normal plant operation and a mechanical vacuum pump for use during startup. Discharge from the vacuum pumps during startup is routed to the elevated release point.

1.2.2.6.5 Turbine Gland Seal System

The turbine gland seal system is designed to provide a means of preventing air leakage into or radioactive steam leakage out of the turbine. The system consists of two 100% steam evaporators, steam seal pressure regulators, steam seal header, gland seal steam condenser and blowers, and the associated piping, valves, and instrumentation.

1.2.2.6.6 Steam Bypass System and Pressure Control System

A turbine bypass system is provided which passes steam directly to the main condenser under the control of the pressure regulator. Steam is bypassed to the condenser whenever the reactor steaming rate exceeds the load permitted to pass to the turbine generator. The capacity of the turbine bypass system is 25% of the turbine design steam flow. The Digital Electro-Hydraulic (DEH) control system provides main turbine control (governor) valve and bypass valve position demands so as to maintain a nearly constant reactor pressure during normal plant operation.

1.2.2.6.7 Circulating Water System

The CW system provides the condenser with a continuous supply of cooling water. It is a closed system utilizing forced draft cooling towers. Makeup water to the system is provided from TMU pumps located in an intake structure on the Columbia River. The makeup water replaces the water lost by evaporation, drift, and blowdown.

1.2.2.6.8 Condensate and Feedwater System

The condensate and feedwater system pumps condensate from the condenser hotwell to the RPV. Condensate is pumped by three main condensate (COND) pumps through the gland seal steam condenser, the steam jet air ejector condensers, and the offgas condenser. After leaving the offgas condenser, the condensate is pumped through a full-flow condensate filter-demineralizer system. The filter-demineralizer effluent is then pumped by three condensate booster pumps through the five low-pressure heaters. The last low-pressure heater discharges to the suction of the RFW pumps. The discharge from the two turbine-driven RFW pumps passes through the sixth stage of feedwater heating and then flows to the RPV. Feedwater flow is controlled by varying the speed of the steam-driven turbine.

1.2.2.6.9 Condensate Filter-Demineralizer System

The full-flow condensate filter-demineralizer system with instrumentation and semiautomatic controls is designed to ensure a constant supply of high-quality water to the reactor.

1.2.2.7 Electrical Systems, Instrumentation, and Control

1.2.2.7.1 Electrical Power Systems

The plant consists of a single main generator directly connected to a main power transformer through an isolated phase electrical bus duct. The main power transformer steps up the output of the 25-kV generator to a nominal 500-kV transmission system voltage.

The output of the main power transformer is connected to a 500-kV switchyard consisting of circuit breakers, disconnect switches, buses, and associated equipment arranged in a ring bus configuration.

A 230-kV offsite supply is provided to a separate startup auxiliary transformer to supply maximum startup, operating and shutdown load requirements for a normal plant auxiliary loads and for safety loads. In addition, a separate 115-kV offsite supply serves a backup auxiliary transformer with sufficient capacity to provide the power requirements of plant safe shutdown loads.

1.2.2.7.2 Electrical Power Systems Process Control and Instrumentation

Main generator electrical controls are located in the main control room. These include main generator circuit breaker controls, synchronizing equipment, and generator excitation and voltage control equipment. Instrumentation is also provided in the main control room for the main generator connections and equipment. This includes indicating instruments for voltage, current, kW, MVAR, and frequency. Recording instruments are provided for generator MW output and main bus voltage. Kilowatt-hour meters are provided for main generator outputs and for auxiliary power system loads. Instrumentation is provided for monitoring generator and transformer temperatures. Other types of monitoring instrumentation are provided as required to ensure proper operation of equipment. Circuit breaker controls, metering, and indication for the auxiliary power system are also located in the main control room.

High-speed protective relaying equipment is provided for the main generator, main and auxiliary transformers, main buses, transmission lines, and interconnecting cables and bus ducts to provide proper isolation of this equipment in the event of electrical faults. The protective relay system includes breaker failure protection and backup relaying to ensure proper isolation of electrical faults in the event of a failure of the primary protective relaying.

1.2.2.7.3 Nuclear System Process Control and Instrumentation

1.2.2.7.3.1 Reactor Manual Control System. The reactor manual control system (RMCS) provides the means by which control rods are positioned from the control room for power control. The system operates valves in each CRD hydraulic control unit to change control rod position. Only one control rod can be manipulated at a time. The RMCS includes the logic that restricts control rod movement (rod block) under certain conditions as a backup to procedural controls.

1.2.2.7.3.2 Recirculation Flow Control System. During normal power operation, a variable frequency power supply is used to control flow by varying the RRC pump motor speed. Adjusting the frequency changes motor speed and the coolant flow-rate through the core, thereby changing the core power level.

1.2.2.7.3.3 Neutron Monitoring System. The neutron monitoring system is a system of in-core neutron detectors and out-of-core electronic monitoring equipment. The system provides indication of neutron flux, which can be correlated to thermal power level for the entire range of flux conditions that can exist in the core. The source range monitors (SRM) and the intermediate range monitors (IRM) provide flux level indications during reactor startup and low power operation. The local power range monitors (LPRM) and average power range monitors (APRM) allow assessment of local and overall flux conditions during power range operation. The traversing in-core probe system (TIP) provides a means to calibrate the individual LPRM sensors. The neutron monitoring system provides inputs to the reactor manual control system to initiate rod blocks if preset flux limits are exceeded, and inputs to the RPS to initiate a scram if other limits are exceeded.

1.2.2.7.3.4 Refueling Interlocks. A system of interlocks that restricts movement of refueling equipment and control rods when the reactor is in the refueling and start-up modes is provided to prevent an inadvertent criticality during refueling operations. The interlocks back up procedural controls that have the same objective. The interlocks affect the refueling platform, refueling platform hoists, fuel grapple, and control rods.

1.2.2.7.3.5 Reactor Vessel Instrumentation. In addition to instrumentation for the nuclear safety systems and ESF, instrumentation is provided to monitor and transmit information that can be used to assess conditions existing inside the reactor vessel and the physical condition of the vessel itself. This instrumentation monitors reactor vessel pressure, water level, coolant temperature, reactor core differential pressure, coolant flow rates, and RPV head inner seal ring leakage.

1.2.2.7.3.6 Process Computer System. An on-line process computer is provided to monitor and log process variables and to make certain analytical computations. The rod worth minimizer function of the computer prevents rod withdrawal under low power conditions if the rod to be withdrawn is not in accordance with a preplanned pattern. The effect of the rod block is to limit the reactivity worth of the control rods by enforcing adherence to the preplanned rod pattern.

1.2.2.7.4 Power Conversion Systems Process Control and Instrumentation

1.2.2.7.4.1 Digital Electro-Hydraulic Control System. The DEH control system maintains control of the turbine governor valves and turbine bypass valves to allow proper generator and reactor response to system load demand changes while maintaining the nuclear system pressure essentially constant. When the generator is not connected to the grid, the DEH control system maintains turbine-generator speed (frequency) in response to reactor pressure changes by adjusting steam flow to the turbine valves and bypass valves.

The turbine generator speed/load controls can initiate rapid closure of the turbine control (governor) valves and rapid opening of the turbine bypass valves to prevent turbine overspeed on a generator electric load loss.

1.2.2.7.4.2 Feedwater System Control. A three-element controller is used to regulate the feedwater system so that proper water level is maintained in the reactor vessel. The controller uses main steam flow rate, reactor vessel water level, and feedwater flow rate signals. The feedwater control signal is used to control the speed of the steam turbine-driven feedwater pumps. During startup, shutdown, and low plant load conditions, the steam turbine-driven feedwater pumps are run at constant speed, and the feedwater control signal is used to modulate a startup feedwater control valve to maintain proper reactor water level.

1.2.2.8 Radioactive Waste Systems

1.2.2.8.1 Liquid Radwaste System

This system collects, treats, stores, and disposes of all radioactive liquid wastes. These wastes are accumulated directly in radwaste tanks or in sumps at various locations throughout the plant for subsequent transfer to collection tanks in the radwaste facility. Wastes are processed on a batch basis with each batch being processed by such method or methods appropriate for the quality and quantity of materials determined to be present. Processed liquid wastes may be returned to the condensate system or discharged to the circulating water blowdown line to the river. The liquid wastes in the discharge piping are diluted with circulating water blowdown to achieve a concentration at the site boundary which is below the limits of 10 CFR Part 20.

Equipment is selected, arranged, and shielded to permit operation, inspection, and maintenance with minimum personnel exposure. For example, tanks and processing equipment which contain significant radiation sources are located behind shielding, and sumps, pumps, instruments, and valves are located in controlled access rooms or spaces. Processing equipment is selected and designed to require a minimum of maintenance.

Protection against accidental discharge of liquid radioactive waste is provided by design redundancy, instrumentation for detection and alarm of abnormal conditions, and procedural controls.

1.2.2.8.2 Solid Radwaste System

Solid radioactive wastes are collected, processed, and packaged for storage and ultimate burial. These wastes are generally stored on the site until the short half-lived isotopes have decayed. Wet solid wastes are collected, dewatered, and solidified in steel containers. Examples of these wastes are filter residue, concentrated wastes, and spent resins. Dry solid wastes such as paper, air filters, rags, and used clothing are compressed and packaged in steel containers.

1.2.2.8.3 Gaseous Radwaste System

The purpose of the gaseous radwaste system is to process and control the release of gaseous radioactive wastes to the site environs so that the total radiation exposure to persons outside the controlled area does not exceed the limits of the applicable regulations, 10 CFR 20 and 10 CFR 50, Appendix I, even with some defective fuel rods.

The offgases from the main condenser are the major source of gaseous radioactive waste. The treatment of these gases includes volume reduction through a catalytic hydrogen-oxygen recombiner, water vapor removal through a condenser, decay of short-lived radioisotopes through a holdup line, further condensation, filtration, adsorption of isotopes on activated charcoal beds, further filtration through high efficiency filters, and final release.

Continuous radiation monitors are provided which indicate radioactive release from the reactor and from the charcoal absorbers. The radiation monitors are used to isolate the OG system on high radioactivity to prevent gas of unacceptably high activity from release.

Since clean gland seal steam is used, the offgases from the gland seal steam condenser are not treated prior to release.

The design of the OG system is such that the annual exposure to any offsite person during normal operation from gaseous sources will be ALARA and less than 10 CFR 20.

1.2.2.9 Radiation Monitoring and Control

1.2.2.9.1 Process Radiation Monitoring

Radiation monitors are provided on various lines to monitor either for radioactive materials released to the environs via process liquids and gases or for process system malfunctions. All effluents from the plant which are potentially radioactive are monitored. Several of the effluent monitoring systems record the results prior to discharge as noted on the following list of the major monitoring systems provided.

a. Main steam line radiation monitoring system,

b. Air ejector and offgas radiation monitoring systems (results recorded except for the charcoal bed vault),

c. Liquid radwaste effluent radiation monitoring system,

d. Plant service water and circulating water blowdown radiation monitoring systems,

e. Standby service water radiation monitoring system,

f. Reactor building ventilation exhaust plenum radiation monitoring system (results recorded),

g. Reactor building elevated release point radiation monitoring system (results recorded except for particulate/iodine sample),

h. Turbine building ventilation exhaust radiation monitoring system, (results recorded),

i. Radwaste building ventilation exhaust radiation monitoring system (results recorded), and

j. Reactor building closed cooling water monitoring system.

1.2.2.9.2 Area Radiation Monitors

Radiation monitoring devices are provided in key areas throughout the plant buildings to ensure that plant personnel will not be inadvertently exposed to high radiation doses.

1.2.2.9.3 Site Radiological Environmental Monitoring

A comprehensive radiation surveillance program was initiated in the spring of 1978 to measure radiation levels in the environs surrounding the plant. The program is designed to measure radiation exposure or radioisotope levels in the environment.

The details of this monitoring program are given in the Offsite Dose Calculation Manual (ODCM).

1.2.2.9.4 Liquid Radwaste System Control

Liquid wastes to be discharged are handled on a batch basis with protection against accidental discharge provided by procedural controls. Instrumentation with alarms to detect abnormal concentration of the radwaste is provided, including automatic closure of discharge valves isolating the system from the environment.

1.2.2.9.5 Solid Radwaste System Control

The solid radwaste system collects, treats, and stores solid radioactive wastes for offsite shipment. Wastes are handled on a batch basis. Radiation levels of the various batches are monitored by the operator.

1.2.2.9.6 Gaseous Radwaste System Control

Gaseous radwastes are discharged through a reactor building elevated release point. Radiation levels of the release are continuously monitored and recorded. Isolation of the main condenser

offgas is automatically initiated prior to release should the activity of the offgas exceed discharge limits.

1.2.2.10 Shielding

The shielding in the plant is designed to minimize exposure of plant personnel to radiation. The radiation levels during operation or shutdown conditions have been considered in determining the shielding requirements.

1.2.2.11 Fuel Handling and Storage Systems

1.2.2.11.1 New and Spent Fuel Storage

New and spent fuel storage racks are designed to prevent inadvertent criticality and load buckling. Sufficient coolant and shielding are maintained to prevent overheating and excessive personnel exposure, respectively. The design of the fuel pool provides for corrosion resistance, adherence to Seismic Category I requirements, and prevention of K_{eff} from exceeding 0.95 under dry or flooded conditions.

1.2.2.11.2 Fuel Handling System

The fuel handling equipment includes a fuel inspection stand, fuel preparation machine, a 125-ton crane, a refueling platform, a new fuel transfer basket, jib cranes, and other related tools for fuel and reactor servicing.

1.2.2.11.3 Fuel Pool Cooling and Cleanup System

The FPC system removes decay heat from stored spent fuel and maintains specified water temperature, purity, clarity, and level. This prevents fuel pool boiling and buildup of excessive radioactive materials in the cooling water, thereby minimizing possible exposures to plant personnel.

Cooling of spent fuel is accomplished by the Seismic Category I cooling system as described in Section 9.1.3. It can be isolated from the Seismic Category II cleanup portion of the system by automatic, redundant, Seismic Category I isolation valves which actuate on low fuel pool water level. If required, safety grade cooling and makeup water from the SW system is available to the system by remote-manual operation of redundant Seismic Category I valves to provide long-term cooling and prevent fuel pool boiloff which might result in unacceptable building environmental conditions.

1.2.2.12 Cooling Water and Auxiliary Systems

1.2.2.12.1 Reactor Building Closed Cooling Water System

The RCC system consists of pumps, heat exchangers, controls, and instrumentation to provide adequate cooling for the reactor auxiliary systems. The system is designed to provide a closed cooling water loop between nonessential systems which are potentially radioactive and the TSW system.

1.2.2.12.2 Plant Service Water System

Normal TSW is supplied from service water pumps located in the circulating water pump house. Two service water pumps are provided. The TSW system is designed to remove heat from various auxiliary equipment located within the plant.

1.2.2.12.3 Ultimate Heat Sink

Two spray ponds that serve as the UHS conservatively have a combined equivalent storage of 30 days, assuming no makeup and maximum evaporation and drift losses. Provisions are made to replenish the sink to allow continued cooling capability beyond the initial 30-day period.

1.2.2.12.4 Demineralized Water Makeup System

The DW makeup system is comprised of the trailer-mounted demineralizers and the DW system.

The DW system is designed to provide demineralized water to the CSTs for plant makeup and demineralized water for other plant operating requirements.

1.2.2.12.5 Potable Water and Sanitary Drain Systems

The plant potable water (PW) system provides water for drinking and sanitary purposes. Potable water is normally supplied from the tower makeup system (see Section 9.2.3).

The sanitary drain system effluent is directed to a central sanitary waste treatment facility which uses aerated lagoons in series with lined facultative stabilization ponds. The treatment plant, about 2500 ft SE of the CGS reactor, also receives waste from the WNP-1/4, the Plant Support Facility, and the DOE's 400 Area.

1.2.2.12.6 Process Sampling Systems

The process sampling system provides process information that is required to monitor plant and equipment performance and changes to operating parameters. Representative liquid and

gas samples are taken automatically and/or manually during normal plant operation for laboratory or on-line analyses.

1.2.2.12.7 Condensate Supply System

The condensate storage facility provides a source of water for testing and makeup during operation. Two 400,000 gal CSTs are interconnected to simultaneously supply condensate to the main condenser via one header, to the CRD pumps via a second header, and to the RHR, RCIC, and HPCS systems and condensate supply and condensate filter/demineralizer backwash pumps via a third header. The condensate supply pumps deliver condensate to miscellaneous services in the reactor and radwaste buildings.

Condensate is returned to the CSTs from the RCIC, and radwaste systems, from CRD, condensate supply, and condensate filter/demineralizer backwash pump mini-flows, and from the main condensate system (equivalent to excess CRD injection water). Initial fill and makeup is from the DW system.

1.2.2.12.8 Equipment and Floor Drainage Systems

Plant equipment and floor drainage systems handle both radioactive and nonradioactive drains. Drainage systems which carry radioactive waste are isolated from drainage systems which do not carry radioactive waste.

All drains in the reactor building and radwaste building are considered radioactive. Turbine building drains are divided into radioactive and nonradioactive but all are directed to the radwaste system for processing. Floor and equipment drains in the diesel generator building and service building are routed to the storm water drainage system. The storm water drainage system is normally nonradioactive, however some accumulation of radioactive material (notably tritium) can occur.

1.2.2.12.9 Compressed Air Systems

The compressed air system consists of the control and service air system and the containment instrument air (CIA) system.

The control air system (CAS) is designed to supply clean, dry, oil-free air to station instrumentation and controls and to the accumulators of the MSIVs located outside the primary containment.

The service air (SA) system is designed to supply clean, oil-free air for station services, such as backwashing demineralizers and filters, hose connections for maintenance throughout the station and breathing air at selected locations.

The CIA system is designed to deliver nitrogen or clean, dry, oil-free air for MSIVs, SRV accumulators, and pneumatic operators located inside the primary containment.

1.2.2.12.10 Heating, Ventilating, and Air Conditioning Systems

The HVAC systems are designed to maintain proper air quality for personnel comfort and safety. In addition, the main control room, the critical switchgear area, the cable spreading room HVAC systems, the SW pump room heat removal systems, the reactor building emergency pump and critical electric equipment area cooling systems, and the ventilation system for the standby diesel generators are designed to operate under all station conditions. The primary containment drywell cooling and ventilation system is designed to operate during normal operation and under most upset conditions except a LOCA. All air distribution systems are designed so that airflow is directed from areas of lesser potential contamination to areas of progressively greater potential contamination.

Three separate and redundant HVAC systems service the main control room, cable spreading room, and critical switchgear areas. SW is used as the cooling medium for each system when the normal cooling water supply is unavailable.

Heating and ventilation for the standby diesel generator rooms is provided continuously for each diesel generator unit. Water cooled air handling units provide additional cooling when the diesel generators operate.

The turbine building is provided with a once-through ventilation system based on the use of evaporative coolers.

Ventilation for the radwaste building is provided by means of a once-through ventilation system with particulates filtered before release to the atmosphere.

The SW pump room heat removal systems consist of two independent and separate fan coil units.

The reactor building emergency pump and critical electric equipment area cooling system consists of 13 air handling units which operate to supply cool air to each of the critical equipment rooms when pumps are started and during abnormal conditions.

The primary containment drywell cooling and ventilation system consists of five fan coil units and nine recirculation fans. During normal operation, a minimum three out of five fan coil units are operating.

Ventilation for the reactor building is provided by a once-through ventilation system based on the use of evaporative coolers. The system incorporates the necessary isolation valves to

ensure the necessary secondary containment integrity. A drywell and suppression chamber purge capability is provided as part of this system.

Other HVAC systems provide ventilation to the service building and other miscellaneous areas.

1.2.2.12.11 Fire Protection System

The FP system is designed to provide for the detection and extinguishing of fires.

Manual pull stations and automatic fire detectors are located appropriately throughout the plant and fire alarms are annunciated in the main control room.

The FP system provides a reliable water distribution system for extinguishing fires. Two motor-driven fire pumps are used for normal service, with a diesel-engine-driven fire pump as a backup. A second diesel-driven fire pump with a separate water supply provides an additional backup. Motor-driven jockey pump is provided to maintain system pressure and to prevent cycling of the main fire pumps.

Automatic suppression systems provide protection to higher hazard areas of the plant including:

- Deluge systems protect the transformers and most other areas containing oil piping and oil storage equipment.
- A low-pressure carbon dioxide (CO_2) system is provided for the generator exciter housing.
- A total flooding Halon system is provided for the main control room power generation control complex (PGCC) subfloor.
- Wet pipe sprinklers protect the turbine/generator bearings and other miscellaneous areas.
- Preaction sprinkler systems protect diesel generators, day tank/transfer pump rooms, and areas with high concentrations of electrical cables.

Manual suppression includes:

- Fire hydrants spaced around the yard fire main loop.
- Fire hose stations located throughout the plant.

- Portable fire extinguishers of appropriate types are strategically and conspicuously placed throughout the plant.

1.2.2.12.12 Communications Systems

The plant communication systems are designed to provide reliable communication inside and outside the plant and from the plant to local fire protection and law enforcement authorities. The system utilizes a public address and building wide alarm system, a public telephone system, a private digital telephone system, a sound powered telephone system, a radio communication system, and an automatic transmission telephone link to the Dittmer Control Center of the Bonneville Power Administration (BPA).

1.2.2.12.13 Lighting Systems

The plant lighting systems are normal ac lighting, normal-emergency ac lighting, dc lighting, and battery-pack emergency lighting. Lighting intensities are designed to provide indoor and outdoor illumination consistent with the July 1974 Illumination Engineering Society recommendations, and meet or exceed Occupational Safety and Health Act (OSHA) requirements.

1.2.2.12.14 Normal Auxiliary Alternating Current Power System

The plant normal auxiliary ac power system consists of two normal auxiliary transformers, the 4.16-kV and 6.9-kV normal auxiliary (non-Class 1E) distribution system, the 480-V auxiliary power distribution system and the 120/208-V non-Class 1E distribution system.

The normal ac auxiliary transformers provide power to all plant auxiliaries and comprise the normal plant ac power source when the main generator is operating. One of the normal auxiliary transformers is a dual secondary type with both secondary windings stepping down the generator voltage to 4.16 kV for supply to 4.16-kV non-Class 1E switchgear buses. The other normal auxiliary transformer steps down the generator voltage to 6.9 kV for supply of 6.9-kV non-Class 1E switchgear buses.

The plant 480-V ac auxiliary power system distributes ac power necessary for normal auxiliary and ESF 480-V plant loads. All non-ESF elements of this distribution system are capable of being supplied from the normal auxiliary power source or from the startup power source via the 4.16 kV-non-Class 1E switchgear. The ESF portions of the 480-V distribution system are supplied via the 4.16-kV Class 1E switchgear, and therefore are capable of being supplied by either the normal, startup, backup, or standby sources.

The 120/208-V non-Class 1E ac power system provides power for non-ESF loads.

1.2.2.12.15 Diesel Generator Fuel-Oil Storage and Transfer System

The diesel fuel oil storage and transfer system consists of separate, independent diesel oil supply subsystems serving each of two emergency diesel generators and the HPCS diesel generator. Each full capacity subsystem consists of a fuel oil storage tank, a transfer pump, a day tank, interconnecting piping, strainers and valves, and associated instrumentation and controls.

1.2.2.12.16 Auxiliary Steam System

The auxiliary steam (AS) system normally operates only when the heating steam evaporators are inoperative during plant shutdown. The system then supplies steam to HVAC systems for air and water space heating and for humidification and also to the radwaste system. The system consists of fuel oil storage tank and transfer pumps, auxiliary boiler, blowdown tank, chemical feed tank and metering pump, deaerator and boiler feed pumps, condensate return tank pumps, steam supply and condensate return piping and valves, and associated instruments and controls.

1.2.3 COMPLIANCE WITH NRC REGULATORY GUIDES

The CGS conformance to the NRC regulatory guides is documented in Section 1.8 and in appropriate sections of this FSAR.

Table 1.2-1

Principal Regulations and Codes Followed in Plant Design

Number	Title
10 CFR series	Code of Federal Regulations, principally:
10 CFR 20	Standards for Protection Against Radiation
10 CFR 50	Licensing of Production and Utilization Facilities
10 CFR 50, Appendix A	General Design Criteria for Nuclear Power Plant Construction Permits
10 CFR 50, Appendix B	Quality Assurance Criteria
10 CFR 50, Appendix I	Numerical Guides for Design Objectives and Limiting Conditions for Operation to Meet the Criterion "As Low As Is Reasonably Achievable"
10 CFR 100	Reactor Site Criteria
IEEE-279	IEEE Criteria for Nuclear Power Generating Station Protection Systems
IEEE-308	IEEE Criteria for Class IE Electrical Systems for Nuclear Power Generating Stations
ASME B&PV	ASME Boiler and Pressure Vessel Code:
Section III	Nuclear Components
Section VIII	Pressure Vessels
Section XI	Inservice Inspection
AEC Press Release IN-817	Tentative Regulatory Supplementary Criteria for ASME Code-Constructed Pressure Vessels
ANSI-B31.1.0	ANSI Standard Code for Pressure Piping, Power Piping

NOTE: Additional codes and regulations applying to specific areas of system design are referenced in discussions of individual systems.

Table 1.2-2

Plant Shielding and Zone Classification

Zone	Description	Design Dose Rate (mrem/hr)
I	Uncontrolled, unlimited access	≤1.0
II	Controlled, limited access	≤2.5
III	Controlled, occupancy for short periods, normally inaccessible	≤100
IV	For very short periods. Secured and controlled entrance.	>100

NOTES:

1. Radiation Zone I areas can be occupied by plant personnel or visitors for unlimited periods.
2. Radiation Zone II areas are areas where whole body dose is not expected to exceed 1.25 rem per calendar quarter.
3. Areas having dose rates in excess of 100 mrem/hr are posted as high radiation areas and access is secured and controlled.
4. Radiation Zone III and IV areas can be entered only after the radiation level is determined and the working time limit is established.
5. Accessible areas have dose rates of less than 100 mrem/hr.
6. Access to all controlled areas is through controlled check points.
7. Controlled and limited access areas are identified by warning signs.

BASIC CONTROLLER
CONTAINS 1 OR 3-MODE CONTROL, SET POINT, MANUAL-AUTOMATIC SELECTION, REVERSE OR DIRECT ACTING, CASCADE SWITCH, AND VALVE POSITION INDICATOR.

BASIC M/A CONTROLLER
CONTAINS 1 OR 3-MODE CONTROL, MANUAL AUTOMATIC SELECTION, REVERSE OR DIRECT ACTING, AND INDICATORS FOR PROCESS VALUE AND VALVE POSITION. THE CONTROLLER SET POINT MUST COME FROM SOME EXTERNAL DEVICE. SYMBOL WILL ALSO BE USED TO INDICATE ONLY A MANUAL TO AUTOMATIC TRANSFER STATION.

RATIO SET STATION
CONTAINS A RATIO ADJUSTMENT KNOB (.1 TO 3.0), INPUT AND OUTPUT INDICATORS, AND THE RATIO AMPLIFIER.

BIAS-MANUAL-AUTOMATIC STATION
CONTAINS A BIAS ADJUSTMENT KNOB -20 TO +20%, INPUT AND OUTPUT INDICATORS, BIAS AMPLIFIER, AND MANUAL-AUTOMATIC SELECTION.

BASIC CASCADE COMBINATION
UTILIZES THE STANDARD CONTROLLER AS THE PRIMARY AND A CONTROLLER WITHOUT INTEGRAL SET POINT ON THE SECONDARY. MUST BE OPERATED IN CASCADE OR IN MANUAL.

CASCADE (2 STANDARD CONTROLLERS)
ANY TWO STANDARD CONTROLLERS MAY BE OPERATED IN CASCADE. THIS COMBINATION MAY BE OPERATED OUT OF CASCADE WITH THE "SECONDARY" CONTROLLER ON AUTOMATIC.

MANUAL LOADING STATION
CONTAINS A DIGITAL HOLD, POWER SUPPLY, AND VALVE POSITION INDICATOR. SIMPLY PROVIDES 1-5 MA INTO A 600 OHM LOAD FOR REMOTE POSITIONING OF VALVES AND DAMPERS. MAY BE USED FOR A SET POINT STATION WHEN PRECISION IS NOT CRITICAL.

SET POINT STATION
CONTAINS THE PRECISE SET POINT UNIT ONLY. TO BE USED WHEN SET POINT MUST BE REMOTE FROM THE CONTROLLER.

HIGH-LOW LIMIT STATION
CONTAINS ELECTRONIC CIRCUITRY TO LIMIT CONTROL SIGNALS TO A PRESET VALUE.

INTEGRATOR
PANEL MOUNTED INTEGRATOR FOR TOTALIZING FLOW SIGNALS. 6 DIGIT COUNTER.

RACK-MOUNTED 3-MODE CONTROLLER
PROPORTIONAL PLUS RESET PLUS RATE.

RACK-MOUNTED 2-MODE CONTROLLER
PROPORTIONAL PLUS RESET.

RACK-MOUNTED RATE ACTION DEVICE
CONTAINS ADJUSTABLE RATE ACTION UNIT.

MANUALLY OPERATED ROTARY SWITCH
WITH ROUND KNOB OPERATOR

2-INPUT PROPORTIONAL AMPLIFIER (RACK-MOUNTED)
CONTAINS TWO INPUT CIRCUITS, INPUT BIAS ADJUSTMENT, OUTPUT BIAS ADJUSTMENT AND GAIN ADJUSTMENT.

3-INPUT SUMMATION AMPLIFIER (RACK-MOUNTED)
SAME AS 2 INPUT SUMMATION AMPLIFIER BUT CONTAINS 3 INPUT CIRCUITS.

8-INPUT SUMMATION AMPLIFIER (RACK-MOUNTED)
SAME AS 2 INPUT SUMMATION AMPLIFIER BUT CONTAINS 8 INPUT CIRCUITS.

SQUARE-ROOT EXTRACTOR (PANEL OR RACK MOUNTED)
CONTAINS CIRCUITRY TO EXTRACT THE SQUARE-ROOT OF THE INPUT SIGNAL AND TRANSMIT A LINEAR SIGNAL.

FUNCTION GENERATOR (RACK-MOUNTED)
CONTAINS CIRCUITRY TO PROVIDE AN OUTPUT AS A VARIABLE FUNCTION OF THE INPUT SIGNAL.

SIGNAL SELECTOR (RACK MOUNTED)
CONTAINS CIRCUITRY TO SELECT THE HIGHER OR LOWER OF A GROUP OF INPUT SIGNALS.

MULTIPLIER-DIVIDER (RACK-MOUNTED)
GENERALLY USED FOR COMPENSATION OF FLOW SIGNALS.

MILLIVOLT CONVERTER
CONVERTS MILLIVOLT INPUT SIGNALS TO ELECTRONIC OUTPUT SIGNALS 10-50 MA.

3-UNIT POWER SUPPLY

DIFFERENTIAL PRESSURE TRANSMITTER
CONVERTS DIFFERENTIAL PRESSURE TO AN ELECTRONIC SIGNAL, 10-50 MA.

PROCESS PRESSURE TRANSMITTER
CONVERTS PROCESS PRESSURE TO AN ELECTRONIC SIGNAL, 10-50 MA.

SINGLE UNIT POWER SUPPLY

ADJUSTABLE HIGH OR LOW ALARM UNIT

ELECTRO-PNEUMATIC CONVERTER

RACK-MOUNTED SET POINT
THIS IS A PRECISE SET POINT UNIT FOR RACK MOUNTING ONLY.

LARGE CASE ROUND CHART RECORDER
DIRECTLY OPERATED.

INDICATING CONTROLLING PYROMETER
MILLIVOLT OR 0-10 V DC INPUT, CURRENT OUTPUT, POSITION MODULATION OR TIME DURATION CONTROL MODELS.

ELECTRO-MECHANICAL CONTROLLER
CONTAINS 1 3-MODE CONTROLLER EITHER TIME, POSITION, OR CURRENT MODULATION. SET POINT COMES FROM A CONTROL SLIDE-WIRE MOUNTED IN A SERVO RECORDER.

RECORDER & CONTROLLER IN COMMON CASE
TWO OR THREE WIRE CONTROLLER, SINGLE-PEN RECORDER.

MINIATURE STRIP-CHART RECORDER
SINGLE-PEN POTENTIOMETRIC TYPE, 4" CHART, 1/2% ACCURACY.

MINIATURE STRIP-CHART RECORDER
TWO-PEN POTENTIOMETRIC TYPE, 4" CHART, 1/2% ACCURACY.

EDGEWISE INDICATORS, GANG MOUNTED

LARGE-CASE STRIP-CHART RECORDER
POTENTIOMETRIC, 12" CHART, 1/4% OF FULL SCALE ACCURACY

LARGE-CASE ROUND-CHART RECORDER
POTENTIOMETRIC, 12" CHART, 1/4% ACCURACY.

INDICATING GAGE, DIRECTLY OPERATED
PANEL MOUNTING

PNEUMATIC OPERATOR
WITH COVER AND CURRENT-TO-PNEUMATIC TRANSDUCER.

PNEUMATIC OPERATOR
WITHOUT COVER BUT WITH CURRENT-TO-PNEUMATIC TRANSDUCER.

HEAVY-DUTY PNEUMATIC OPERATOR

PNEUMATIC POSITIONER AND VALVE
PIPE MOUNTED.

PNEUMATICALLY OPERATED CONTROL VALVE
MAY OR MAY NOT HAVE INTEGRAL I/P TRANSDUCER-WITH ACTUATOR.

PNEUMATICALLY OPERATED CONTROL VALVE
MAY OR MAY NOT HAVE INTEGRAL I/P TRANSDUCER - WITHOUT ACTUATOR.

3-WAY SOLENOID-OPERATED VALVE

EDGEWISE INDICATOR

TEMPERATURE SENSOR
THERMOCOUPLE OR RESISTANCE TEMPERATURE DETECTOR

LIQUID-LEVEL TRANSMITTER
DIFFERENTIAL PRESSURE TYPE

2-2A42-04	1	0	/
CVI NO.	CVI SHT.	ABOVE	DWG. SHT.

DEVICE PLATE INSTALLATION
PLATE AND FLANGES

INDUSTRIAL MASS FLOWMETER
WITH SELF-CONTAINED INTEGRATOR, DIGITAL READOUT.

INDICATOR ELECTRICALLY OPERATED
250° SCALE, PANEL MOUNTING.

MANUALLY OPERATED ROTARY SWITCH
WITH PISTOL GRIP HANDLE.

P	-	PROPORTIONAL CONTROLLER
P + R	-	PROPORTIONAL PLUS RESET CONTROLLER
P + R + R	-	PROPORTIONAL PLUS RESET PLUS RATE CONTROLLER
M/A	-	MANUAL-AUTOMATIC SELECTION
S.P.	-	SET POINT

Columbia Generating Station Final Safety Analysis Report	General Electric Piping and Instrumentation Drawing Symbols		
	Draw. No. 02A42-04,1	Rev. 0	Figure 1.2-25

VALVES

- GATE (NORMALLY OPEN) (SEE NOTE 6)
- GATE (NORMALLY CLOSED) (SEE NOTE 6)
- GLOBE (NORMALLY OPEN)
- GLOBE (NORMALLY CLOSED)
- GLOBE, STOP CHECK
- CHECK
- EXCESS FLOW CHECK
- BLEEDER CHECK
- COMBINED BLEEDER CHECK AND STOP (ISOLATION CHECK)
- REVERSE CURRENT CHECK (SHOWN WITH PILOT LIGHTS)
- PLUG OR BALL (NORMALLY OPEN)
- PLUG OR BALL (NORMALLY CLOSED)
- NEEDLE (NORMALLY OPEN)
- NEEDLE (NORMALLY CLOSED)
- SQUIB ACTUATED SHEAR PLUG
- GLAND LEAK OFF
- GLAND SEAL WATER
- BUTTERFLY (POSITION SHOULD BE IDENTIFIED) — NC OR NO
- SAUNDER'S TYPE (WEIR) (NORMALLY OPEN)
- SAUNDER'S TYPE (WEIR) (NORMALLY CLOSED)
- ANGLE (NORMALLY OPEN)
- ANGLE (NORMALLY CLOSED)
- ANGLE STOP CHECK
- HOSE
- RELIEF OR SAFETY
- RELIEF WITH REMOTE ELECTRICAL SETTING
- SOLENOID VALVE WITH BUILT-IN FLOW CONTROL
- THREE WAY (FIG. A) (SEE NOTE 5) SHOWN TO INDICATE EITHER 1-PORT STATUS (OPEN OR CLOSED) NOT DETERMINED OR 2-MODULATING 3 WAY CONTROL VALVE
- THREE WAY (FIG. B) (SEE NOTE 5) — NEXT PORT OF CLOSURE NORMALLY CLOSED PORT NORMALLY OPEN PORT
- FOUR WAY
- FOUR WAY (PLUG)
- PRESSURE REGULATING
- AIR VENT
- MANUAL EMERGENCY PULL BOX
- FIRE HYDRANT (FIRE PROTECTION)
- ALARM (FIRE PROTECTION)
- DELUGE (FIRE PROTECTION)
- FLOODING (FIRE PROTECTION)
- DIAPHRAM OPERATED CONTROL OPENS ON AIR FAILURE
- DIAPHRAM OPERATED CONTROL CLOSES ON AIR FAILURE

  APPLIES TO ALL TYPES OF VALVES. USED TO DESIGNATE DIAPHRAM ACTION.
- SHUTTLE VALVE DOUBLE CHECK
- SPRING CHECK

OPERATORS

- AO — (LIMIT SWITCH AS REQ'D) — AIR OPERATOR (TYP FOR VALVE OR DAMPER)
- EHO — ELECTRO HYDRAULIC OPERATOR (TYP FOR VALVE OR DAMPER)
- HO — (LIMIT SWITCH AS REQ'D) — HYDRAULIC PISTON OPERATOR (TYP FOR VALVE OR DAMPER)
- MO — (LIMIT SWITCH) — MOTOR OPERATOR
- NE (SEE NOTE 1) — SOLENOID
- RM — MANUAL REMOTE
- DIAPHRAGM
- DIAPHRAGM WITH POSITIONER
- FLOAT
- MANUAL TRIP AND RESET
- WITH MANUAL OVERRIDE
- QUICK OPENING
- SELF ACTUATED PRESSURE CONTROL
- TCV — SELF ACTUATED TEMPERATURE CONTROL
- TH — THERMOSTATICALLY ACTUATED CONTROL

MISC. SYMBOLS

- DRIP PAN ELBOW
- PITOT TUBE (ANNUBAR) FLOW ELEMENT
- METERING ORIFICE PLATE FLOW ELEMENT
- PIPING SPOOL PIECE (SHOWN FOR FLOW TEST SECTION)
- FLOW NOZZLE
- FLOW CONTROLLER (FLOW REGULATOR)
- FLOW METER (POSITIVE DISPLACEMENT)
- IN LINE FLOW INDICATOR, ELEMENT, ETC. (SEE MEL COMPONENT LISTING)
- SIGHT FLOW GLASS
- SNUBBER
- INDICATION THAT ITEM IS FURNISHED WITH ASSOCIATED EQUIPMENT (UON)
- EJECTOR
- FLOW DIRECTION ARROW
- REDUCER (OR INCREASER)
- THREADED CAP (SEE NOTE 12)
- WELDED CAP
- THREADED PLUG (SEE NOTE 12)
- QUICK DISCONNECT (SEE NOTE 12)
- HOSE CONNECTION (SEE NOTE 12)
- FLEXIBLE CONNECTION
- FLANGE
- BLIND FLANGE
- SPECTACLE FLANGE
- INSULATING FLANGE
- THREADED COUPLING
- CLAMP COUPLING (VICTAULIC)
- RUPTURE DISC
- EXPANSION JOINT
- TRAP
- SEAL WATER TRAP
- "Y" TYPE STRAINER
- IN LINE CONICAL STRAINER
- BASKET STRAINER (SIMPLEX)
- BASKET STRAINER (DUPLEX)
- TEMPORARY STRAINER
- FILTER
- RESTRICTING ORIFICE
- VARIABLE RESTRICTING ORIFICE
- MULTIPLE ORIFICE

MISC. SYMBOLS

- INSTRUMENT AIR SUPPLY (70-100 PSIG)
- INSTRUMENT AIR SUPPLY (REDUCED)
- EQUIPMENT DRAIN FUNNEL
- FLOOR (AREA) DRAIN
- SAMPLE POINT (SAMPLE CONNECTION)
- BOLTED HOT-TAP TEE
- SPRAY HEADER OR RING
- MOISTURE SEPARATOR (IN LINE TYPE)
- PRIMARY CONTAINMENT PENETRATION
- SECONDARY CONTAINMENT PENETRATION
- MUFFLER (EXHAUST SILENCER)
- PUMP
- SET PRESSURE VERIFICATION DEVICE (SPVD)
- AUTOMATED TEST SYSTEM

LOGIC DIAGRAM SYMBOLS

REF M620-501-1

MISC. ABBREVIATIONS

A/S	AIR SUPPLY
E/S	ELECTRONIC POWER SUPPLY
FAI	FAIL AS IS
FC	FAIL CLOSED (CLOSES ON AIR OR ELECTRICAL FAILURE)
FO	FAIL OPEN (OPENS ON AIR OR ELECTRICAL FAILURE)
NC	NORMALLY CLOSED
ND	NORMALLY DE-ENERGIZED
NE	NORMALLY ENERGIZED
NO	NORMALLY OPEN
TH	THROTTLED

MISC. EQUIPMENT LEGEND

ACV	AIR CONTROL VALVE
GLA	GAS AND LIQUID ANALYZER
H/A	HAND/AUTO STATION
HS	HAND SWITCH
HSE	HOSE
LE	LABORATORY EQUIPMENT
MA	MANIFOLD
MS	MANUAL SWITCH
S/S	SELECTOR SWITCH
TFC	TANK FILL CONNECTION
VPI-LVDT	VALVE POSITION INDICATION-LINEAR VARIABLE DIFFERENTIAL TRANSFORMER
FX	FLOW TEST POINT (SEE NOTES 9 & 13)
PX	PRESSURE TEST POINT (SEE NOTES 9 & 13)
TX	TEMPERATURE TEST POINT (SEE NOTES 9 & 13)

HVAC EQUIPMENT LEGEND

ATD	AIR TURNING DEVICE
BD	BACKDRAFT DAMPER
BG	BOTTOM GRILLE (VERTICAL BELOW 6'-0")
BR	BOTTOM REGISTER (VERTICAL BELOW 6'-0")
CD	CEILING DIFFUSER (HORIZONTAL WITH OR WITHOUT CEILING)
CG	CEILING GRILLE (HORIZONTAL WITH OR WITHOUT CEILING)
CR	CEILING REGISTER (HORIZONTAL WITH OR WITHOUT CEILING)
DC	DUST COLLECTOR
FC	FAN COIL UNIT
FRP	FIBERGLASS REINFORCED POLYESTER DUCT
PF	PORTABLE FILTER
PRD	PRESSURE REDUCING DAMPER
RHC	REHEAT COIL
SD	SPLITTER DAMPER
TG	TOP GRILLE (VERTICAL ABOVE 6'-0")
TR	TOP REGISTER (VERTICAL ABOVE 6'-0")
VD	VOLUME DAMPER
WHA	WATER HAMMER ARRESTOR

ELECTRICAL SYMBOLS

- LOCAL
- REMOTE PANEL OR RACK MOUNTED
- MAIN CONTROL ROOM (PANEL OR RACK MOUNTED)
- TRANSMITTER (SHOWN AS LOCAL)
- COMPUTER INPUT
- TDAS INPUT (TRANSIENT DATA ACQUISITION SYSTEM)
- TEMPERATURE SCANNER INPUT
- ALARM ANNUNCIATOR ON LOCAL PANEL (AL, ALL, AH, AHH AND ALH USED WHEN SERVICE IS DEFINED)
- ALARM ANNUNCIATOR ON REMOTE PANEL (AL, ALL, AH, AHH AND ALH USED WHEN SERVICE IS DEFINED) — (ALARM LOW)
- ALARM ANNUNCIATOR SHOWING ALARM ON IMPROPER VALVE POSITION (ONE OR BOTH DESIGNATORS MAY BE USED) — (NOT FULLY OPEN) O, (NOT FULLY CLOSED) ■
- ALARM ANNUNCIATOR (USED WHEN SERVICE IS NOT DEFINED)
- O (OPEN) C (CLOSED) PILOT LIGHTS
- PROPELLER TYPE AGITATOR
- ELECTRIC WATER HEATER
- 2HP ELECTRIC MOTOR (SHOWN AS 2 HORSEPOWER)
- DEH — DIGITAL ELECTRO HYDRAULIC PROGRAMMABLE LOGIC CONTROLLER

HVAC SYMBOLS

- OUTSIDE AIR INTAKE LOUVER
- PARALLEL DAMPER
- OPPOSED BLADE DAMPER
- BACKDRAFT DAMPER
- FIRE DAMPER
- MANUALLY OPERATED DAMPER (PARALLEL)
- AUTO. DIAPHRAM OPERATED DAMPER (PARALLEL)
- AUTO. DIAPHRAM OPERATED DAMPER WITH POSITIONER (PARALLEL)
- MOTOR OPERATED DAMPER (PARALLEL)
- ROUGHING FILTER OR PREFILTER
- HIGH EFFICIENCY FILTER
- CHARCOAL FILTER
- UNIT HEATER (ELECTRIC STEAM OR HOT WATER)
- HUMIDIFIER
- FAN (SHOWN WITH INLET VANE CONTROL DAMPER)
- PROPELLOR TYPE FAN
- VANEAXIAL OR TUBEAXIAL FAN (NOT USED ON FLOW DIAGRAMS)
- AO — VANEAXIAL FAN WITH AUTOMATIC VARIABLE PITCH BLADES OR INLET VANES (NOT USED ON FLOW DIAGRAMS)
- D — INCLINED DROP IN RESPECT TO AIR FLOW (NOT USED ON FLOW DIAGRAMS)
- R — INCLINED RISE IN RESPECT TO AIR FLOW (NOT USED ON FLOW DIAGRAMS)
- 12 X 20 — DUCT SIZE (FIRST NO. IS SIDE SHOWN) (NOT USED ON FLOW DIAGRAMS)
- SQUARE ELBOW WITH TURNING VANE (NOT USED ON FLOW DIAGRAMS)
- SUPPLY DUCT (NOT USED ON FLOW DIAGRAMS)
- EXHAUST OR RETURN DUCT (NOT USED ON FLOW DIAGRAMS)

NOTES

1. ALL SOLENOID VALVES SHOWN IN DE-ENERGIZED POSITION. "NE" DENOTES SOLENOID NORMALLY ENERGIZED DURING PLANT OPERATION, "ND" DENOTES NORMALLY DE-ENERGIZED.
2. TYPICAL INSTRUMENT DESIGNATION (EPN): INSTRUMENT (SEE NOTE 9) — INSTRUMENT NUMBER — SYSTEM (SEE NOTE 9) — PS 18A RRC (EPN = RRC-PS-18A)
3. TYPICAL EQUIPMENT DESIGNATION (EPN): SYSTEM (SEE NOTE 9) — EQUIPMENT (SEE NOTE 9) — EQUIPMENT NUMBER (SDA-HV-1)
4. TYPICAL PIPING DESIGNATION: A" MS(1)-1-4 — PIPE SIZE — SYSTEM AND (SUBSYSTEM) (SEE NOTE 9) — UNIQUE LINE NUMBER IDENTIFIER (AS REQ'D) FOR ASME SECTION III LINES (SEE NOTE 10) — SERVICE RATING: 1 = 150# CLASS, 2 = 300# CLASS, 3 = 600# CLASS, 4 = 900# CLASS, 5 = 1500# CLASS, 6 = 2500# CLASS
5. WHERE THREE WAY VALVE OPERATIONS ARE NOT FINAL, "FIG. A" IS USED (SEE VALVE SYMBOLS). WHERE VALVE OPERATION IS FINAL, "FIG. B" IS USED.
6. "NORMALLY OPEN" SYMBOL (UNSHADED) AND "NORMALLY CLOSED" SYMBOL (SHADED) VALVE POSITIONS OR ORIENTATIONS ARE DRAWN TO DEPICT THE SYSTEMS IN NORMAL POWER OPERATION OF THE PLANT, WITH STANDBY, SUPPORTING, OR EMERGENCY SYSTEMS SHOWN IN STANDBY CONDITION. TO DETERMINE ACTUAL VALVE POSITIONS THE USER MUST CONSULT THE SYSTEM OPERATION PROCEDURES AND THE OPERATIONS CREW.
7. FOR OPERATING CONDITIONS, DESIGN CONDITIONS AND COMPLETE PIPING DESIGNATION SEE THE WNP-2 SPECIFICATION TABLES 1 & 2; SECTION 15B.1 FOR B31.1 PIPING; SECTION 1 FOR ASME SECTION III PIPING AND SECTION 2 FOR ASME SECTION III TUBING.
8. CODE GROUP DESIGNATION APPLIES ONLY THROUGH PRIMARY ROOT VALVES UNLESS SPECIFICALLY NOTED OTHERWISE. M619 DRAWING SERIES GIVES CODE GROUP FOR INSTRUMENTATION.
9. SYSTEM AND COMPONENT ABBREVIATIONS CAN BE FOUND IN THE MASTER EQUIPMENT LIST (MEL) OR IN SECTION 1.2 OF THE FSAR.
10. THE SUBSYSTEM (NOTE 4) DESIGNATES A PROCESS FUNCTION.
11. FOR "ISOLATION SIGNAL CODES" FOR PRIMARY CONTAINMENT ISOLATION VALVES SEE FSAR TABLE 6.2-16.
12. WHERE A THREADED CAP IS USED, QUICK DISCONNECT STYLE FITTINGS (CAMLOCK, CHICAGO QUICK DISCONNECT, ETC) MAY BE USED ON A ONE FOR ONE BASIS.
13. TEST POINTS SHOWN ON ALL FLOW DIAGRAMS DO NOT EXIST IN THE MASTER EQUIPMENT LIST (MEL). THESE ARE LOCAL TEST POINTS ONLY.
14. SEE PPM 1.3.29 AND/OR PPM 15.1.18 FOR THE VALVE LOCKED POSITION.

PIPING AND SYSTEM CODE GROUPS

CODE GROUP	APPLICABLE CODE
A	ASME BOILER AND PRESSURE VESSEL CODE SECTION III CLASS 1.
B	ASME BOILER AND PRESSURE VESSEL CODE SECTION III CLASS 2.
C	ASME BOILER AND PRESSURE VESSEL CODE SECTION III CLASS 3.
D	ANSI B31.1 CODE FOR PRESSURE PIPING.
E	NSSS ENGINEERED INSTRUMENTS.

QUALITY ASSURANCE CLASSES

REQUIREMENTS FOR QUALITY ASSURANCE CLASSES ARE SPECIFIED IN THE WNP-2 SPECIFICATIONS.

SEISMIC REQUIRMENTS

REQUIREMENTS FOR SEISMIC CLASSES ARE SPECIFIED IN THE WNP-2 SPECIFICATIONS.

BUILDING LOCATION LEGEND

A	AUXILIARY BUILDINGS
C	PART OF OR WITHIN PRIMARY CONTAINMENT
D	DIESEL GENERATOR BUILDING
L	OFFSITE LOCALE
M	MAKEUP WATER PUMP HOUSE
O	OUTDOORS ON SITE
P	PUMP HOUSE
R	REACTOR BUILDING
S	SERVICE BUILDING
T	TURBINE GENERATOR BUILDING
W	RADWASTE/CONTROL BUILDING

LINES

- MAIN PROCESS LINE
- AUXILIARY PROCESS OR INSTRUMENT LINE
- INSTRUMENT OR SERVICE AIR
- INSTRUMENT CAPILLARY TUBING
- INSTRUMENT AND CONTROL ELECTRICAL LEADS
- HEAT TRACED LINE
- LINES DESIGNATED ON OTHER FLOW DIAGRAMS

LINES (HVAC)

- SUPPLY OR RETURN AIR
- EXHAUST AIR
- LEAKAGE AIR
- U — UNDERCUT DOOR
- L — LOUVERED DOOR
- R — REFRIGERANT LINE

FSAR FIG.

Columbia Generating Station
Final Safety Analysis Report

Flow Diagram Legend, Symbols and Abbreviations

Draw. No. M501	Rev. 59	Figure 1.2–26

System Acronyms

AAP	Alternate Access Point Bldg. and Appurtenances
AEA	Tech. Support Cntr. Exhaust Air
AMA	Tech. Support Cntr. Mixed Air
ANN	Annunciators
AOA	Tech. Support Cntr. Outside Air
APRM	Average Power Range Monitors
APWH	Tech. Support Cntr. Potable Hot Water
AR	Air Removal
ARA	Tech. Support Cntr. Return Air
ARE	Tech. Support Cntr. Refrig. Equipment
ARI	Alternate Rod Insertion
ARM	Area Radiation Monitoring
AS	Auxiliary Steam
BA	Backwash Air
BAS	Breathing Air Supply
BCF	Boiler Chemical Feed
BD	Cond. Blowdown or Rad. Boards
BS	Bleed (Extraction) Steam
CAC	Containment Atmosphere Control (Deactivated)
CAS	Control Air System
CBD	Circ. Water Blowdown
CCH	Control Room Chilled Water
CEP	Containment Exhaust Purge
CF	Chemical Feed
CHEM	Chemistry Equipment
CIA	Containment Instrument Air
CJW	Cooling Jacket Water
CL	Chlorine
CMS	Containment Monitoring System
CN	Containment Nitrogen
CND	Condenser Drains & Vents
CO	Condensate (Auxiliary)
CO_2	Carbon Dioxide
COMM	Communications
COND	Condensate (Nuclear)
CP	Cathodic Protection
CPR	Condensate Demineralizer
CRA	Containment Recirculating Air
CRD	Control Rod Drive
CSP	Containment Supply Purge
CTMA	Cooling Tower Electrical Bldg. Mixed Air
CVB	Containment Vacuum Breakers
CW	Circulating Water
DCN	CRD Decontamination
DCW	Diesel Cooling Water
DE	Diesel Exhaust (Engine)
DEA	Diesel Building Exhaust Air
DEH	Digital Electro-hydraulic Control
DG	Diesel Generator
DLO	Diesel Lube Oil
DMA	Diesel Building Mixed Air
DO	Diesel Oil
DOA	Diesel Building Outside Air
DRA	Diesel Building Return Air
DSA	Diesel (Engine) Starting Air
DW	Demineralized Water
EDR	Equipment Drains Radioactive
ELEC	Electrical Maintenance Equipment
EOF	Emergency Offsite Facility
ERM	Environmental Rad. Monitoring
ES	Exhaust Steam (Turbine)
FAC	Facilities Generic Equipment
FD	Floor Drain
FDR	Floor Drain Radioactive
FO	Fuel Oil
FP	Fire Protection
FPC	Fuel Pool Cooling
FW	Filtered Water
GEA	Guard House Exhaust Air
GFP	Guard House Fire Protection
GH	Main Guard House
GMA	Guard House Mixed Air
GOA	Guard House Outside Air
GPWH	Guard House Water Hot Potable
GRA	Guard House Return Air
GY	Glycol
H_2	Hydrogen (Turbine Generator)
HCO	Heating Steam Condensate
HD	Heater Drain
HHW	Heating Hot Water
HP	Health Physics
HPCS	High Pressure Core Spray
HS	Heating Steam
HSSF	Hydrogen Storage and Supply Facility
HSV	Heating Steam Vent
HT	Heat Tracing
HV	Heater Vent
HWC	Hydrogen Water Chemistry
HY	RRC Hydraulic Control
IBD	ISO Phase Bus Duct Cooling
IR	Instrument Rack
IRM	Intermediate Range Monitor
IRON	Chemical Feed
LD	Leak Detection
LE	Laboratory Equipment (Permanent Plant)
LF	Laundry Facility
LPCS	Low Pressure Core Spray
LPDS	Loose Parts Detection System
LPRM	Local Power Range Monitor
MD	Miscellaneous Drain
MECH	Mechanical Maintenance Equipment
MEL	Master Equipment List
MET	Meteorological
MLF	Mobile Laundry Facility
MS	Main Steam (Nuclear)
MSH	Machine Shop Equipment
MSLC	Main Steam Leakage Control (Deactivated)
MT	Material Transport
MW	Miscellaneous Waste
MWR	Miscellaneous Waste Radioactive
NSSE	Nuclear System Servicing Equipment
NSSS	Nuclear Steam Supply System
OFEA	Offsite Facility Exhaust Air
OFMA	Offsite Facility Mixed Air
OFOA	Offsite Facility Outside Air
OFRA	Offsite Facility Recirculation Air
OG	Off Gas
OL	Obstruction Lighting
PDIS	Plant Data Information System
PEA	Pumphouse Exhaust Air
PI	Process Instrumentation
PL	Plant Equipment
PMA	Pumphouse Mixed Air
POA	Pumphouse Outside Air
PPC	Plant Process Computer
PRA	Pumphouse Return Air
PRM	Process Radiation Monitoring
PS	Process Sampling
PSD	Plant Sanitary Drain
PSR	Process Sampling Radioactive
PVMS	Plant Vibration Monitoring System
PVR	Process Vents Radioactive
PWC	Potable Cold Water
PWH	Potable Hot Water
PWR	Process Waste Radioactive
RBM	Rod Block Monitor
RCC	Reactor Closed Cooling Water
RCIC	Reactor Core Isolation Cooling
RD	Roof Drain
REA	Reactor Building Exhaust Air
RFT	Reactor Feedwater Turbine
RFW	Reactor Feedwater
RHR	Residual Heat Removal
ROA	Reactor Building Outside Air
RPIS	Rod Position Indicator System
RPS	Reactor Protection System
RPWH	Reactor Building Potable Hot Water
RRA	Reactor Building Return Air
RRC	Reactor Recirculation
RSE	Reactor Service Equipment
RWCU	Reactor Water Cleanup
RWM	Rod Worth Minimizer
S	Sampling
SA	Service Air
SAT	Sulfuric Acid Treatment
SCH	Service Building Chilled Water
SCI	Supervisory Control
SCW	Stator Cooling Water
SEA	Service Building Exhaust Air
SEC	Plant Security
SEIS	Seismic Monitoring System
SFS	Spent Fuel Storage
SGT	Standby Gas Treatment
SHCO	Service Building Heating Condensate
SHHW	Service Building Heating Hot Water
SLC	Standby Liquid Control
SM	Salinity Monitoring
SMA	Service Building Mixed Air
SO	Seal Oil
SPTM	Suppression Pool Temp Monitoring
SPWH	Service Building Potable Hot Water
SRA	Service Building Return Air
SRM	Source Range Monitoring
SS	Sealing Steam
SW	Standby Service Water
SWA	Solid Waste
SWCF	Service Water Chemical Feed
TDAS	Transient Data Acquisition System
TEA	Turbine Building Exhaust Air
TG	Turbine Generator
TIP	Traversing Incore Probe
TMU	Tower Makeup Water
TO	Turbine (Lube) Oil
TOA	Turbine Building Outside Air
TPWH	Turbine Bldg. Potable Hot Water
TRA	Turbine Building Return Air
TSC	Technical Support Center
TSW	Plant Service Water
VES	Vessel (Sect. 8, Non Power Block)
VRMA	Variable Speed Drive Bldg. Mixed Air
WCH	Radwaste Building Chilled Water
WEA	Radwaste Building Exhaust Air
WHCO	Radwaste Heating Condensate
WMA	Radwaste Building Mixed Air
WNP2	Washington Nuclear Plant 2 (Columbia Generating Station)
WOA	Radwaste Building Outside Air
WPWH	Radwaste Bldg. Potable Hot Water
WRA	Radwaste Building Return Air
WRE	Radwaste Building Refrigeration
WRM	Wide Range Monitoring
ZINC	Chemical Feed System

Equipment Acronyms

AA	Audio Alarm
AC	Air Conditioning Unit
ACC	Accumulator
ACM	Acoustic Monitor/Sensor
AD	Air Damper
AH	Air Handling Unit
AI	Air Indicator
ALM	Alarm Annunciator-Do Not Use
ALT	Alternating Relay
AM	Ammeter
AMP	Amplifier
ANN	Annunciator
AO	Air Operator
AR	Air Receiver
AR/FR	Analyzer and Flow Recorder
ASM	Assembly
ASW	Air Switch (4-way Valve)
AT	Air Transmitter
ATD	Amp Transducer
ATS	Automatic Transfer Switch
AUD	Audio Monitor
AUX	Auxiliary Unit
AV	Air Valve
AW	Air Washer
AY	Analyzer
B0	24 Volt Battery
B1	125 Volt Battery
B2	250 Volt Battery
B3	12 Volt Battery
B4	48 Volt Battery
BDET	Badge (Keycard) Detector
BELL	Bell (Fire Protection)
BFI	Blown Fuse Indicator
BL	Baler
BLDG	Bldg (For PSD System Only)
BLR	Boiler
BT	Bolted Tee (For SA System)
BU	Emerg Lighting Battery Unit
BUOY	Buoy
C	Compressor
C0	24 Volt Battery Charger
C1	125 Volt Battery Charger
C2	250 Volt Battery Charger
C3	12 Volt Battery Charger
CAB	Cabinet
CAP	Capacitor
CB	Circuit Breaker
CC	Cooling Coil
CCTV	Closed Circuit Television
CCU	Central Control Unit
CE	Conductivity Element
CERA	Cond Element Retractor Assembly
CF	Charcoal Filter
CFG	Centrifuge
CH	Channel
CHL	Chlorinators
CHM	Chamber
CHR	Chiller
CHS	Chassis
CI	Conductivity Indicator
CIC	Conductivity Ind Controller
CIS	Conductivity Ind Switch
CIT	Conductivity Ind Transmitter
CITS	Conductivity Ind Transmitter Switch
CJW	Cooling Jacket Water
CM	Communications Monitor
CNTR	Contractor
COE	Corrosivity Element
COIC	Corrosivity Indic Cont
COMP	Computer
CONN	Connector
COR	Corrosivity Recorder
COS	Carbon Monoxide Sensor
COT	Corrosivity Transmitter
CP	Control Panel
CPL	Data Coupler
CPTR	Compactor
CPU	Central Processing Unit
CR	Conductivity Recorder; Control Room Chiller
CRA	Crane
CRB	Control Rod Blade
CRM	Control Module
CRS	Conductivity Recorder Switch
CRT	Terminal Display Screen
CS	Conductivity Switch
CSK	Shield Transfer Cask
CT	Current Transformer/Cooling Tower
CU	Condensing Unit
D	Damper (Backdraft Or Motor)
DC	Decoder
DCM	Dry Cleaning Machine
DCN	CRD Decontamination System
DDR	Disk Drive Recorder
DE	Density Element
DET	Detector
DFS	Differential Flow Switch
DG	Digital Display Generator
DH	Drywell Head
DIF	Diffuser
DIO	Diode, Control Rectifier
DISC	Disconnect Switch
DLR	Differential Level Recorder
DLS	Differential Level Switch
DLT	Differential Level Transmitter
DM	Demineralizer
DMM	Display Memory Module
DMS	Demister
DMTR	Demand Meter
DOE	Dissolved Oxygen Element
DOIT	Dissolved Oxygen Indic Trans
DOOR	Door
DOR	Dissolved Oxygen Recorder
DP	Distribution Panel
DPC	Diff Press Controller
DPE	Drip Pan Elbow
DPI	Diff Press Ind
DPIC	Diff Press Ind Controller
DPIR	Diff Press Ind Recorder
DPIS	Diff Press Ind Switch
DPIT	Diff Press Ind Transmitter
DPR	Diff Press Recorder
DPS	Diff Press Switch
DPT	Diff Press Transmitter
DR	Demand Recorder
DRVE	Drive Mechanism For CRD
DS	Density Switch
DT	Dens Trans Or Drive Turbine
DTIS	Diff Temp Indicating Switch
DTRS	Diff Temp Recording Switch
DTS	Diff Temp Switch
DTT	Diff Temp Transmitter
DU	Deaerator
DV	Deluge Valve
DVSP	Dump Valve Solenoid Pilot
DVSPV	Dump Valve Solenoid Pilot Valve
DWS	Demineralized Water Shower
DY	Dryer
E/I	Volt To Current Converter
E/P	Electro Pneumatic Converter
E/S	Electronic Power Supply
EAMP	Preamplifier
EC	Electronic Controller
ECG	Electrochemical Generator
ED	Eductor
EF	Electronic Filter
EFC	Excess Flow Check Valve
EHC	Electric Heating Coil
EHO	Electrohydraulic Operator
EI	Power Supply Monitor
EIS	Power Supply Monitor Switch
EJ	Expansion Joint
EJC	Ejector
ELEV	Elevator
ELP	Emergency Lighting Panel
EMSQ	Mean Square Voltage Device
ENG	Engine
EPA	Electrical Protection Assem
EPP	Emergency Power Panel
EQ	Speciality Equip and Tools
ERB	Emerg Rmt Ballast (Lighting)
ES	Exhaust Silencer
ESH	Electric Strip Heater
EUH	Electric Unit Heater
EV	Evaporator
EX	Exhauster
EXC	Exciter
F	Filter
F/U	Flow Unit
FA	Flame Arrestor
FC	Flow Controller
FCN	Fuel Oil Tk Fill Connector
FCV	Flow Control Valve
FD	Fire Damper
FDg	Freon Degreaser
FE	Flow Element
FG	Flow Glass
FGEN	Function Generator
FH	Fume Hood
FHB	Fuel Handling Box
FI	Flow Indicator
FIC	Flow Indicating Controller
FICS	Flow Indicating Controller Switch
FIS	Flow Indicating Switch
FIT	Flow Indicating Transmitter
FL	Filter
FLP	Fillport Assem
FLT	Filter
FLX	Flexible Connection
FN	Fan
FO	Freon Actuated Operator
FP	Filter Polisher
FQ	Flow Integrator
FQI	Flow Integrating Indicator
FQS	Flow Integrating Switch
FR	Flow Recorder
FR/DL	Flow and Diff. Level Recorder
FRC	Flow Recording Controller
FRDLR	Flow and Diff Level Recorder
FRS	Flow Recording Switch
FS	Flow Switch
FSPV	Flow Solenoid Pilot Valve
FT	Flow Transmitter
FTD	Frequency Transducer
FU	Filter Unit
FUSE	Fuse
FX	Flow Test Connection
FY	Flow Sig. Cond.
GATE	Gate
GCAL	AGS Calibrator
GEN	Generator
GOV	Governor
GVT	Gravity Ventilator
H	Heater
H_2E	Hydrogen Element
H_2I	Hydrogen Indicator
H_2IS	H_2 Indicating Switch/Monitor
H_2IT	Hydrogen Ind Transmitter
H_2R	Hydrogen Recorder
H_2T	Hydrogen Transmitter
HAS	High Amplitude Selector
HC	Heating Coil
HCU	Hydraulic Control Unit
HF	HEPA Filter
HM	Hour Meter
HMI	Human Machine Interface
HO	Hydraulic Operator
HOI	Hoist
HP	Valve Act. Hyd. Power Unit
HPU	Hydraulic Power Unit
HR	Hydrogen Recombiner
HS	Hose Station
HSS	High Selector Switch
HT	Hydrant
HTC	Heat Trace Cable
HTP	Heat Trace Panel
HU	Humidifier
HUM	Humidifier (Obsolete. Use HU)
HV	Heating and Ventilation Unit
HVRB	High Voltage Rubber Blanket
HX	Heat Exchanger
HZM	Hertz Meter
I/P	Current Pneumatic Converter
ID	Ionization Detector
IL	Indicating Light
IMD	Inductive Motor Drive
IN	Inverter
IND	Inductor
INDX	Indexer
IOS	Current Operated Switch
IR	Instrument Rack
IS	Intake Silencer
ISOL	Isolator, Isolation Device
ITD	Current Transducer
IX	Ion Exchanger
JB	Junction Box
JP	Jet Pump
KBD	Computer Keyboard (Security)
L	Lubricator
LA	Lightning Arrestor
LAG	Dynamic Compensator
LAS	Low Amplitude Selector
LC	Level Controller
LCRM	Log Count Rate Meter
LCV	Level Control Valve
LE	Level Element
LF	Lighting Fixture
LG	Level Glass
LI	Level Indicator
LIC	Level Indicating Controller
LIS	Level Indicating Switch
LITS	Level Indic Trans Switch
LMS	Limit Switch
LMTR	V/I Signal Limiter
LNR	Linear Reactor
LOC	Lube Oil Conditioner
LP	Lighting Panel
LPW	24 Volt Lambda Power Supply
LR	Level Recorder
LR/PR	Level/Pressure Recorder
LRS	Level Recording Switch
LS	Level Switch
LSC	Lightning Strike Counter
LSPV	Sol. Pilot Valve TMU-level
LSS	Low Selector Switch
LT	Level Transmitter
LTD	Level Transmitter Detector
LVDT	Linear Var. Dif. Transformer
LVS	Low Volume Selector
LWS	Low Differential Pressure
M	Motor
M/A	Manual/Auto Station
MA	Manifold
MACH	Machine
MBS	Maint. Bypass Switchgear
MC	Moisture Controller
MDET	Metal Detector
MDS	Manual Discharge Station
MDU	Motion Detection Unit
ME	Moisture Element
MG	Motor-Generator Set
MHDD	Moving Head Disc Drive
MI	Moisture Indicator
MIC	Moisture Indicating Controller
MIS	Moisture Indicating Switch
MM	Motor Module (TIP System)
MO	Motor Operator
MODEM	Modem
MON	Monitor
MPDS	Microprocessor Data System
MPS	Manual Pull Station
MR	Moisture Recorder
MS	Moisture Separator
MT	Mositure Transmitter
MTA	Dew Point Transmitter Amplif
MTS	Manual Transfer Switch
MUX	Multiplexer
MV	Manifold Valve
MV/I	M/Volt To Current Converter
MW	Microwave Receiver
MX	Mixer

Equipment Acronyms (con't)

MZ	Multizone Air Conditioner
NR	Neutral Grounding Resistor
O/M	Input/Out Module
O_2/H_2	Oxygen /Hydrogen$_2$
O_2E	Oxygen Element$_2$
O_2H_2R	Oxygen/Hydrogen Recorder$_2$
O_2I	Oxygen Indicator$_2$
O_2R	Oxygen Recorder$_2$
OS	Oil Separator
OSC	Oscillograph
OZG	Ozone Generator
P	Pump
P/B	Push Button
P/E	Pneumatic/Electric Converter
P/I	Pressure/Current Converter
P/P	Pressure Inverter
PA	Pre-Amps
PBU	Seismic Playback Unit
PC	Pressure Controller
PCV	Pressure Control Valve
PDM	Power Distribution Module
PDP	Power Distribution Panel
PE	Pressure Element
PH	Ph Ind Transmitter Recorder
PHB	Pneumatic Hydraulic Booster
PHC	Ph Controller
PHE	Ph Element
PHEC	Photoelectric Controller
PHED	Photoelectric Detector
PHIC	Ph Indicating Controller
PHIT	Ph Indicating Transmitter
PHITS	Ph Indicating Transmitter Switch
PHR	Ph Recorder
PHT	Ph Transmitter
PI	Pressure Indicator
PIC	Press Indicating Controller
PICS	Press Indicating Controller and Switch
PIS	Pressure Indicating Switch
PL	Programmable Logic Card
PLC	Programmable Logic Controller
PNL	Panel
POC	Disc Position Signal Conv
POE	Position Indication Element
POI	Position Indicator
POIC	Position Indicating Controller
POS	Position Switch
POT	Position Transmitter
POTR	Potentiometer "CL.1E Only"
POV	Pilot Operated Pop Off Valve
PP	Power Panel
PR	Pressure Recorder
PRN	Line Printer
PROG	Programmer
PRTM	Programmable Timer
PRV	Pressure Reg. Valve
PS	Pressure Switch
PT	Poten. Xmfer Or Press. Transm.
PTA	Barometric Pressure Amplifier
PTD	Pressure Transducer
PTZM	Pan Tilt Zoom Monitor
PUI	Purity Indicator
PUIT	Purity Indicator Transmitter
PUS	Purity Switch
QCC	Quick Couple Connection
QDC	Quick Disconnect
QHM	Run Time Meter
QSV	Quick Acting Solenoid Valve
R	Reservoir
R/I	Resistance/Current Converter
RA	Radiation Amplifier
RAD	Radiation Mon. Control Board
RC	Radiation Controller
RCM	Respirator Cleaning Module
RD	Rupture Disc
RDCC	Rod Drive Control Cabinet
RDD	Rod Detector Display
RE	Radiation Element
RECT	Rectifier
REL	Relay
RES	Resistor
RF	Refrigeration Machine(OG)
RFM	Radio Frequency Monitor
RG	Regulator
RI	Radiation Indicator
RIS	Radiation Indicating Switch
RLY	Relay
RM	Radiation Monitor
RMC	Remote Manual Controller
RMS	Remote Manual Switch
RO	Restricting Orifice
ROD	Control Rod
RPIS	Rod Position and Info Sys.
RPV	Reactor Pressure Vessel
RR	Radiation Recorder
RRM	Refrigerant Recovery Machine
RSA	Response Spectrum Annunciator
RSCC	Rod Sequence and Control Cab
RSDP	Rod Sequence Display Panel
RSM	Radiation Sampler
RSMD	Rod Select Module
RSR	Response Spectrum Recorder
RSRT	RSR Transducer for RSA
RST	Resin Trap
RT	Radiation Transmitter
RTM	Run Time Meter
RV	Relief Valve
RVT	Roof Ventilator
S	Electronic Trip Unit
SC	Speed or Seismic Controller
SCAN	Scanner
SCL	Scaler
SCR	Screen
SE	Speed Element
SEW	Safety Eye Wash/Shower
SF	Spectacle Flange
SH	6.9 Kv Switch Gear
SHRED	Shredder
SI	Speed Indicator
SIOA	Silicon and Oxygen Analyzer
SL	480 Volt Switch Gear
SM	4.16 Kv Switch Gear
SMA	Smoke Alarm, Surface Mt. Acceler.
SMD	Smoke Detector
SNB	Snubber
SOL	Solenoid (Mech. Linkage)
SP	Sample Probe
SPC	Spacer
SPS	Speed Switch (Temp. Entry)
SPV	Solenoid Pilot Valve
SPVD	Set Press Verification Device
SQRT	Square Root Extractor
SR	Sample Rack
SRU	Signal Resistor Unit
SS	Speed or Seismic Switch
SSW	Step Switch
ST	Strainer
SUH	Steam Unit Heater
SUM	Summer
SUMP	Sump
SV	Solenoid Valve
SYNC	Synchroscope Meter
T	Trap
T/SS	Temp Selector Switch
TA	Trip Auxiliary Unit
TAPE	Magnetic Tape Unit
TAS	Tamper Alarm Switch
TB	Terminal Box
TBE	Turbidity Element
TBIT	Turbidity Indicating Trans
TBR	Turbidity Recorder
TBS	Turbidity Switch
TBT	Turbidity Transmitter
TC	Temperature Controller
TCV	Temperature Control Valve
TD	Time Delay
TDS	Time Delay Relays
TE	Temperature Element
TE/ME	Temperature/Moisture Element
TEST	Test (MEL Diagnostics)
THD	Thermal Detector
TI	Temperature Indicator
TIC	Temperature Indicating Controller
TIS	Temperature Indicating Switch
TJR	Temperature Scanning Recorder
TK	Tank
TM	Timer
TN	Turn Style
TNG	Turning Gear
TPA	Triaxial Peak Accelerograph
TPSA	Testable Pipe Spool Assembly
TQ	Time Totalizer
TQR	Torque Recorder
TQS	Torque Switch
TQT	Torque Transmitter
TR	Temp./ Triax. Record./Transform.
TRB	Terminal Block
TRC	Temperature Recorder Controller
TRL	Translator
TRS	Temperature Recording Switch
TS	Temperature Switch
TSC	Temperature Scanner
TT	Temperature Transmitter
TT/MT	Temperature/Moisture Transmitter
TUBE	LPRM Guide Tube Assembly
TV	Test Valve
TW	Thermal Well
TY	SMA HVAC, Special Func. Relay
UFM	Uniplex Field Module
USG	Ultra-Sonic Generator
UTD	Ultra-Sonic Transducer
UV/OR	UV Oxidation Reactor
UVD	Ultra-Violet Detector
V	Valve
V/F	Voltage/Freq. Converter
VARM	Var. Meter
VATD	Var. Transducer
VBAM	Vibration Differential Amp
VBE	Vibration Element
VBEC	Vibration/Eccentricity Indicator
VBI	Vibration Indicator
VBIS	Vibration Indicating Switch
VBR	Vibration Recorder
VBS	Vibration Switch
VCR	Video Cassette Recorder
VD	Viewing Device
VE	Vibration Element
VIR	Vibration Instrument Rack
VM	Voltmeter
VMP	Vibration Monitoring Panel
VPI	Valve Pos. Indication System
VSC	Variable Speed Controller
VT	Velocity Transmitter
VTD	Voltage Transducer
VX	Process Instrument Valve
VZ	Vaporizer
W	Watt
WDA	Wind Direction Amplifier
WDR	Wind Direction Recorder
WDT	Wind Direction Transmitter
WELL	Well (For PSD System Only)
WHM	Watt Hour Meter
WM	Watt Meter
WR	Water Reprocessing Unit
WSA	Wind Speed Amplifier
WSR	Wind Speed Recorder
WST	Wind Speed Transmitter
WTD	Watt Transducer
WUH	Water Unit Heater
X	Primary Containment Penetration
XAR	Resid. Chlorine Analyzer Recorder
XAY	Analyzer, Special Types
XD	Explosives Detector
XE	Element, Special Types
XI	Indicator, Special Types
XR	Recorder, Special Types
XS	Sensor, Special Types
XT	Transmitter, Special Types
ZONE	Fire Protection Zone Desig.
ZS	Tamper Switch

This block is the command switching or primary actuating function. This block can represent a switch, valve probe timer, or trip circuit. This block is normally the starting point of a functional sequence with an output only, but can have input and aux. input depending on the type of device. The same device may have a number of outputs, but each functional sequence initiated shall be shown by an individual block showing the same identification number and cross-reference. (See drawing sheet.)

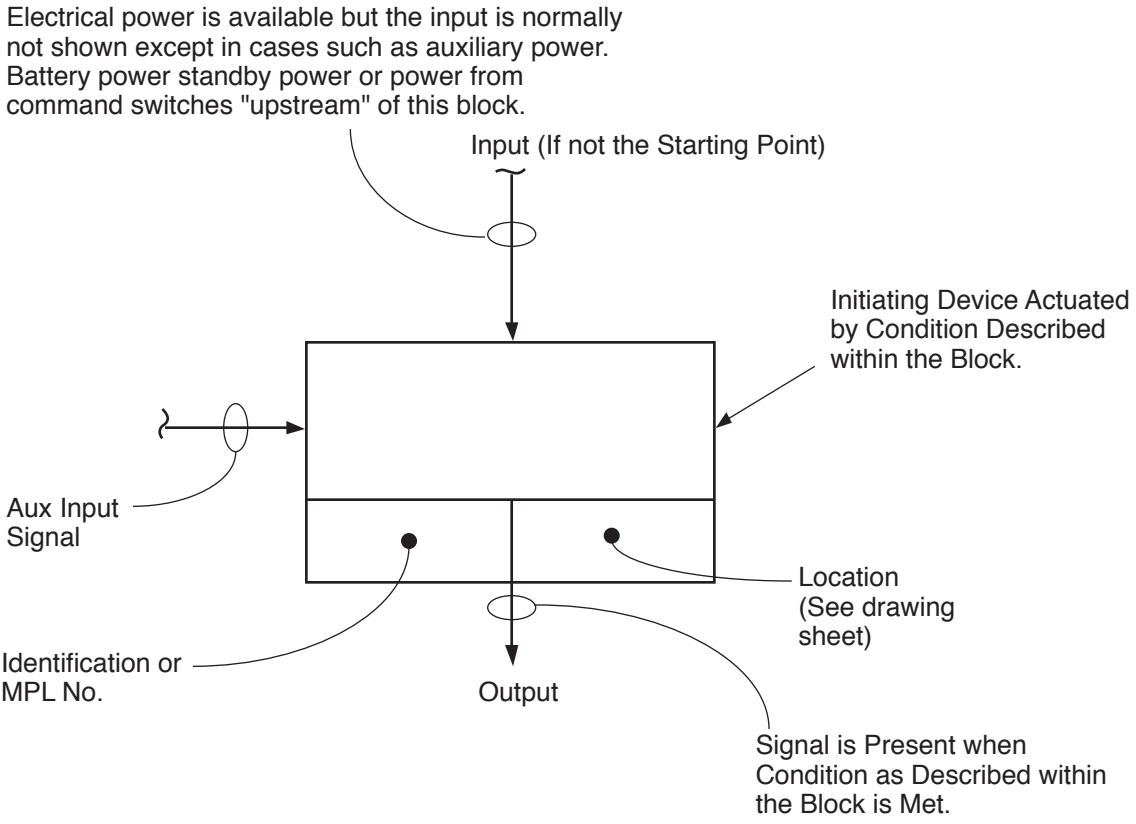

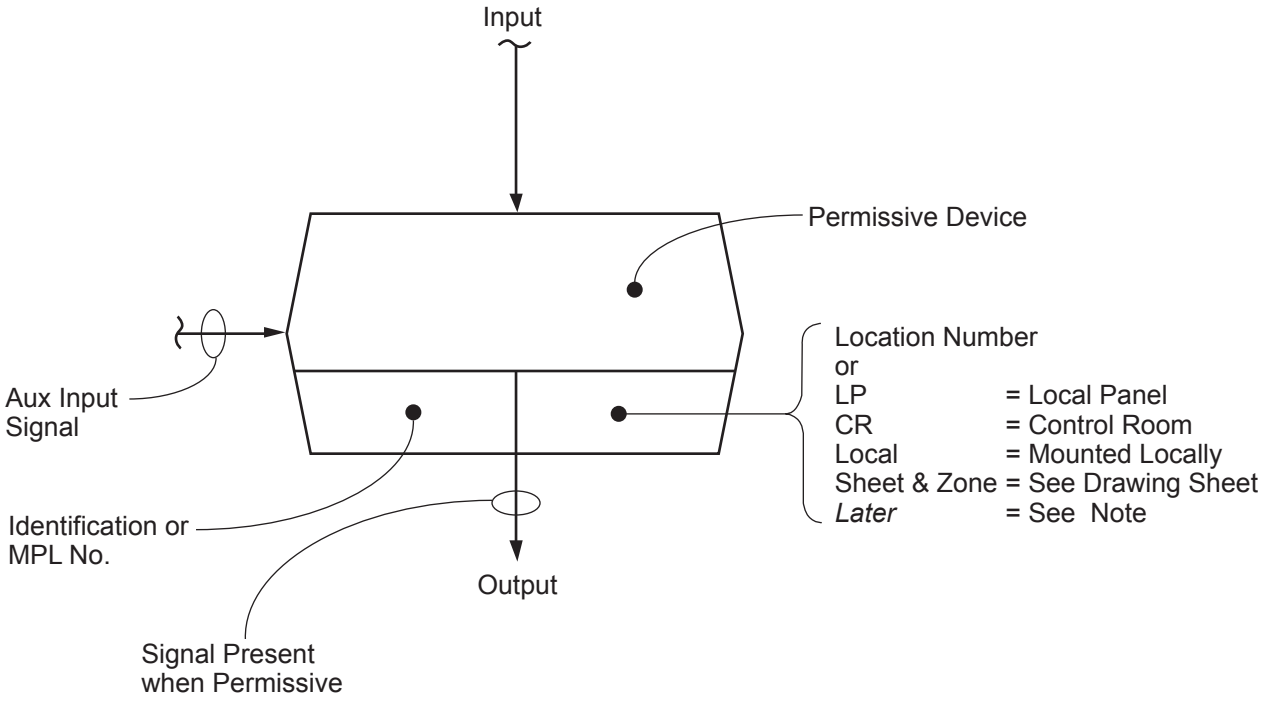

This block defines a permissive function which must be satisfied to permit the signal flow to pass to the next block. This block has incoming, outgoing, and may have auxiliary signals. The output from this permissive may be sealed in.

Note:

The word *later* may be used if the location is unknown but the correct location shall be noted on a future revision.

If a permissive or a primary function is shown in more than one place on drawings, provide a cross-reference to the parent function. (Formally an "X" was shown in the location of other switch handle positions, indicating that their blocks were an intricate part of the numbered switch assembly, but a different position of the switch handle. The "X" in location is inactive for new design.)

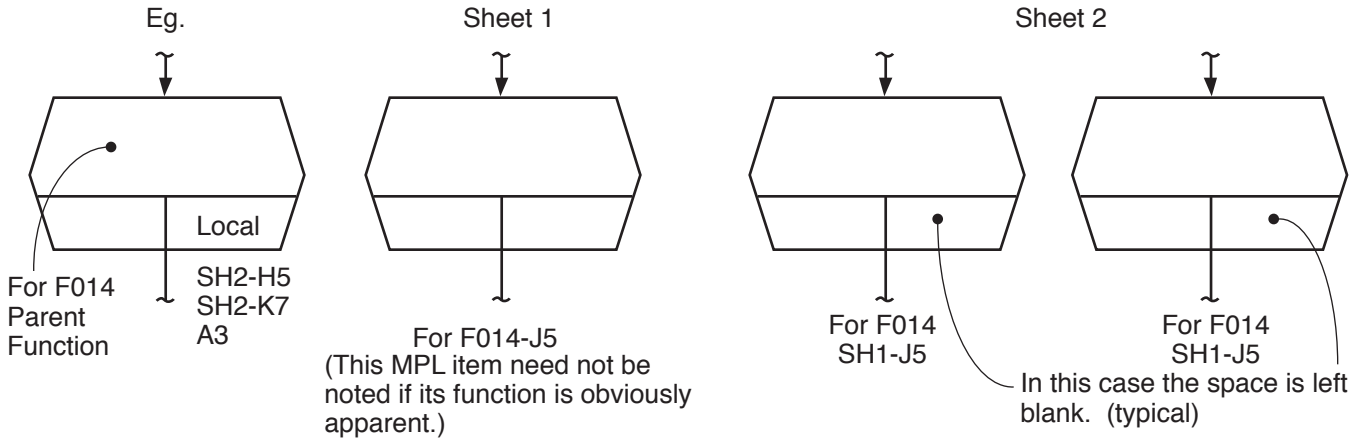

Show MPL item number of the valve or equipment served adjacent to the permissive or primary function. (See example)

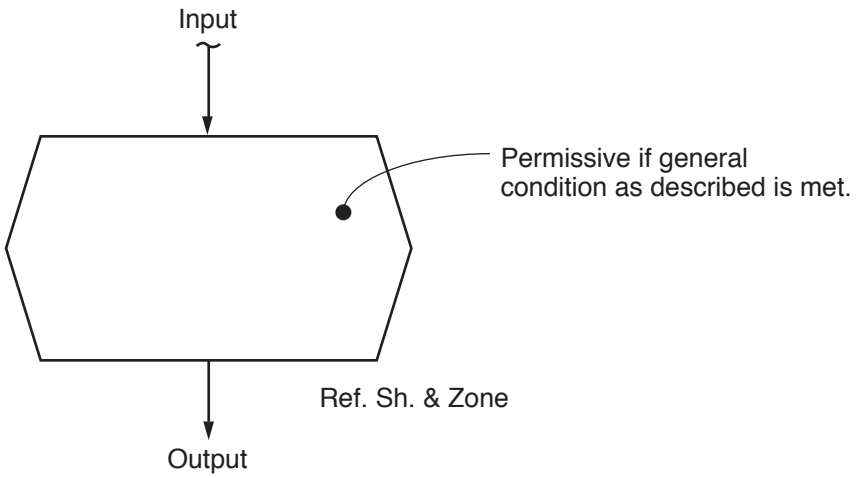

This block is a permissive condition.

Where the permissive is a general condition and not identified with a single device, the outer enclosure only is shown. It only has an input and output.

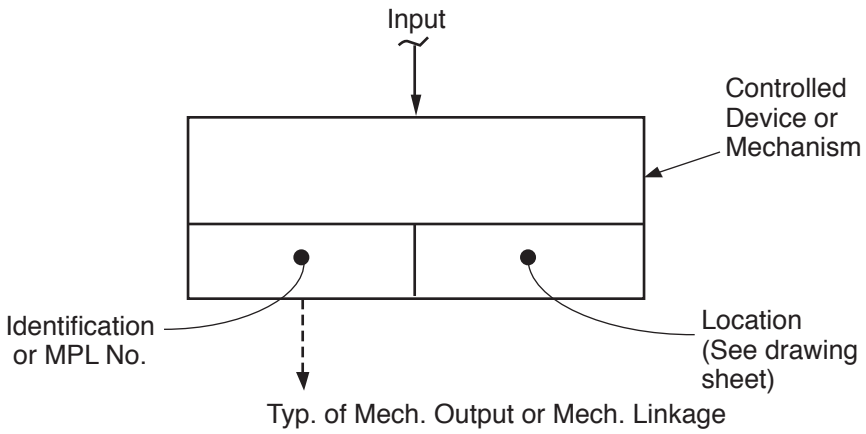

This block is a final device. It can be a relay, valve, electro-mech. sw., etc. Normally it has only inputs, but can have mech. outputs or position switch outputs.

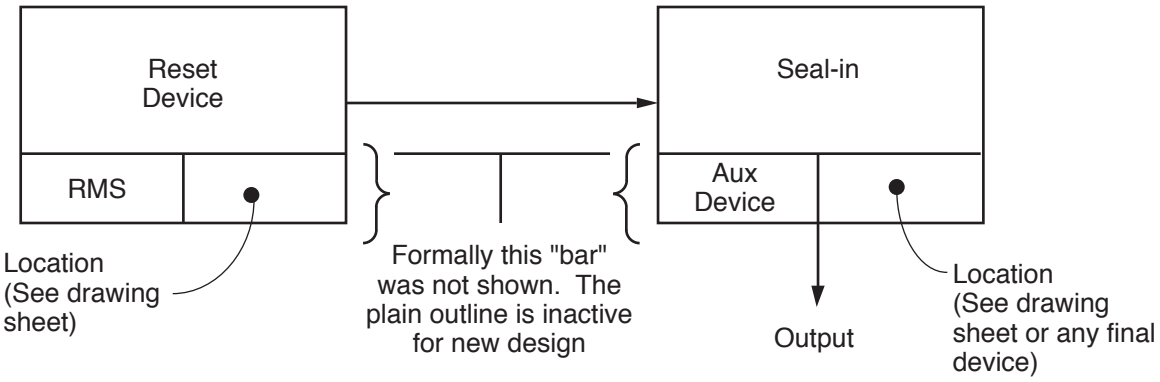

This is a seal-in with a manual reset device. The function of the seal-in is to latch in a signal and to continue that signal until manually reset. A seal-in shown without a reset device implies that the reset device is part of, and located on the nearest valve or contactor and is automatically reset by breaking the signal downstream of the seal-in signal. In all other cases the reset device shall be shown in conjunction with the seal-in.

Examples of Typical Seal-in Blocks.

(A)

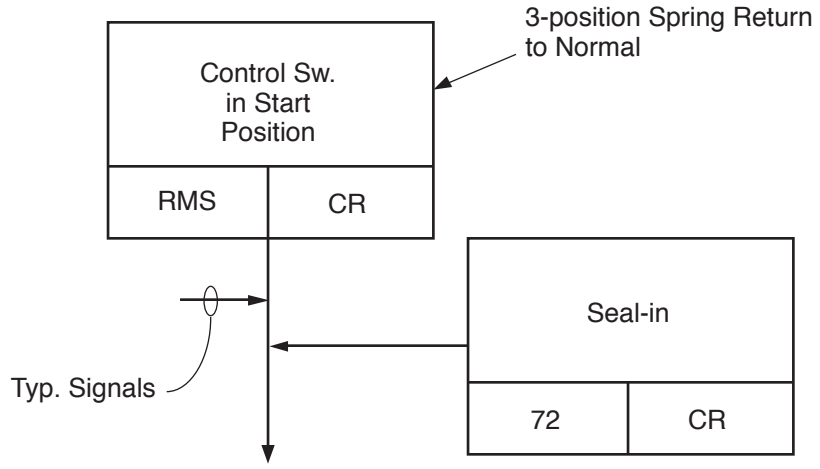

In this case, all signals at this point would be sealed-in.

(B)

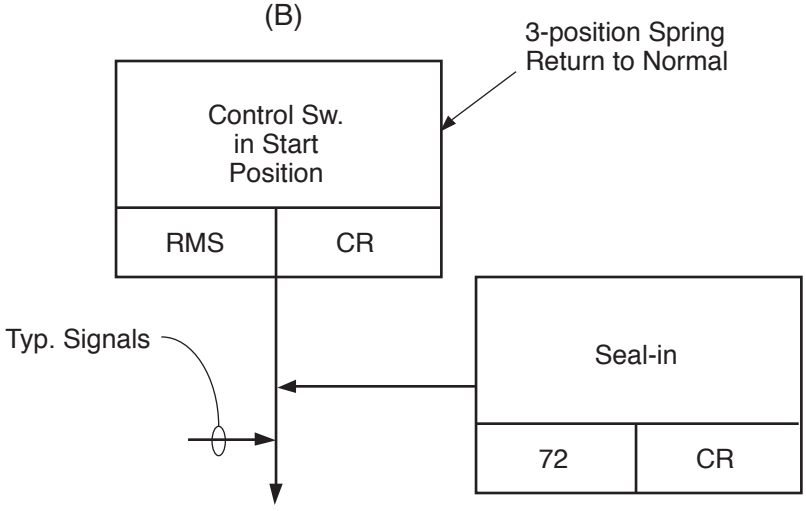

In this case, only the control sw. signal would be sealed-in.

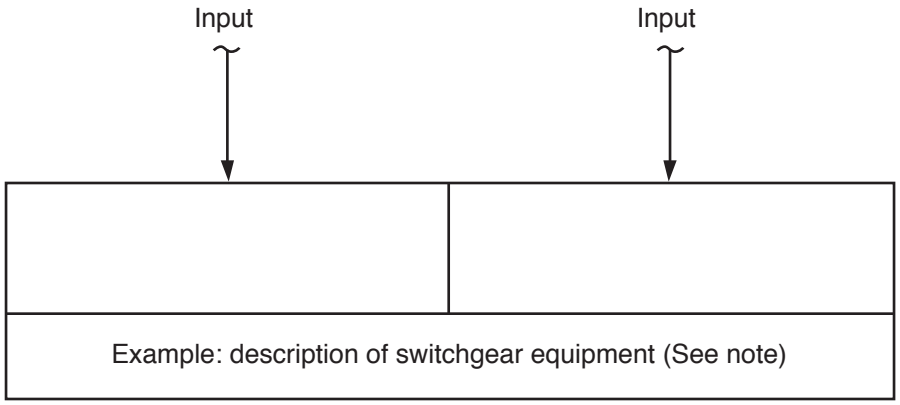

This block is a final device used to represent motor starters, circuit breakers, etc. It has only input signals. The input to the right causes an opposed action to the input on the left, such as left-open: right-close.

Note:

A final device may have more than one input. Each of these inputs can initiate the block. The block can have electrical inputs to indicating devices. Switchgear descriptions are found in ANSI spec. C37.2.

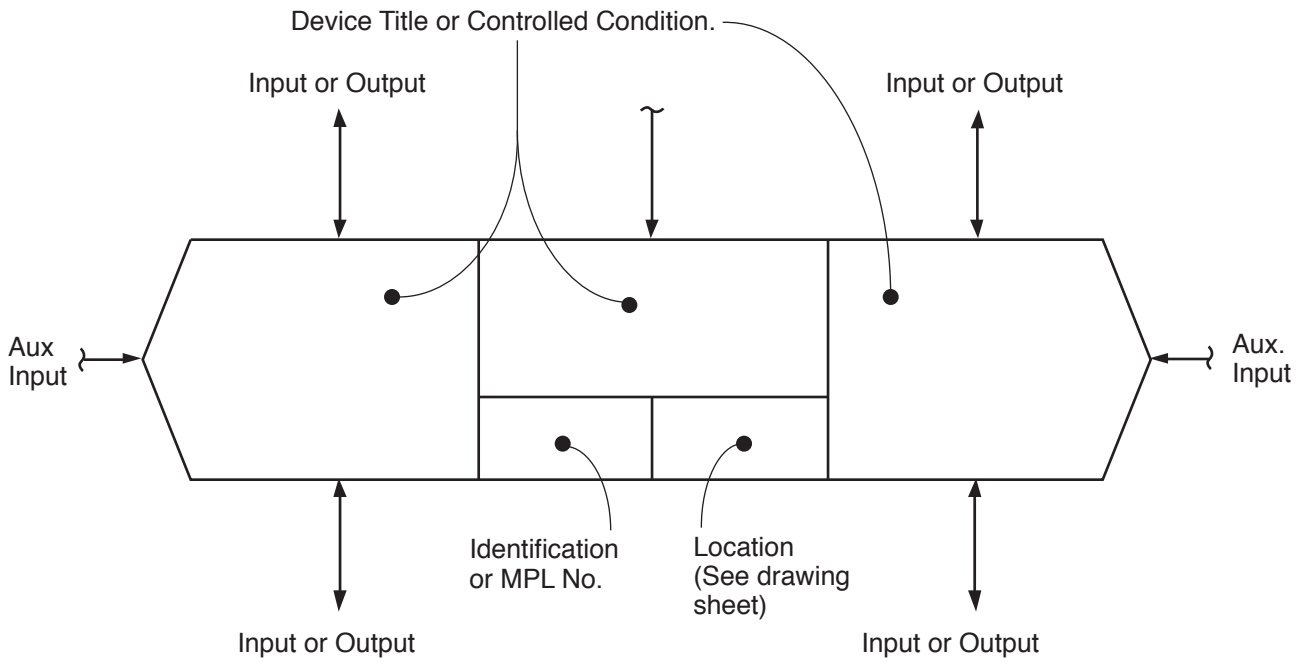

This block is a permissive operated by devices such as valve or pump switchgear designated in the inner block. This condition or device effects the operation of the final device. It has elect. inputs, mech. inputs, aux. inputs (mech. or elec.), and mech. or elect. outputs. This device is normally a valve. This is also used for other input/output power sources such as air or hydraulic. A solenoid pilot valve for an air operated valve is an example of this type of device (see Figure 1.2-26). When the two side blocks are the controlling blocks they have aux. input signals.

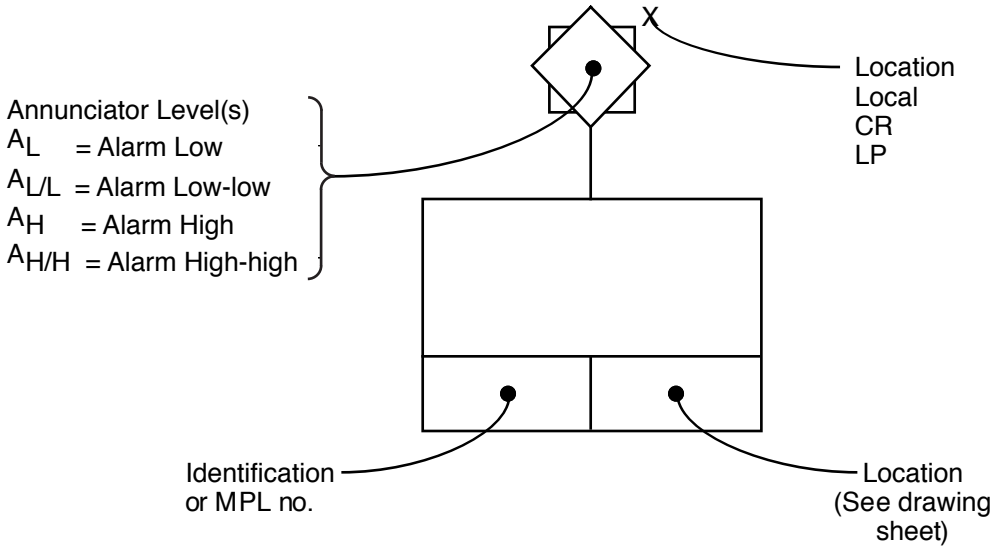

This block is a primary function for annunciators.

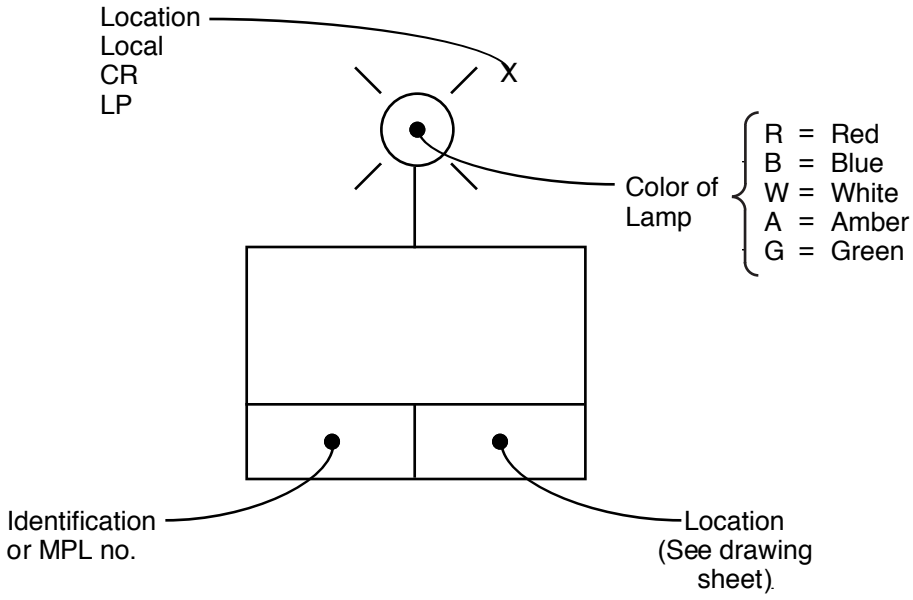

This block is a primary function for ind. lights.

This line represents an elec. flow signal. This line may actuate a final device and may be used to represent actuation of a permissive block.



This line represents an auxiliary signal source such as air or hydraulic, and is not electrical.

This line represents mechanical outputs and /or mechanical linkage.



This symbol represents the start of the primary initiating signal.

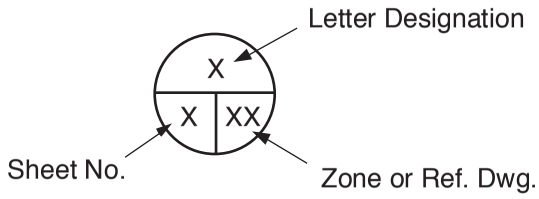

This symbol represents a match circle. The letter designation on one dwg. must match the letter on the interfacing dwg.

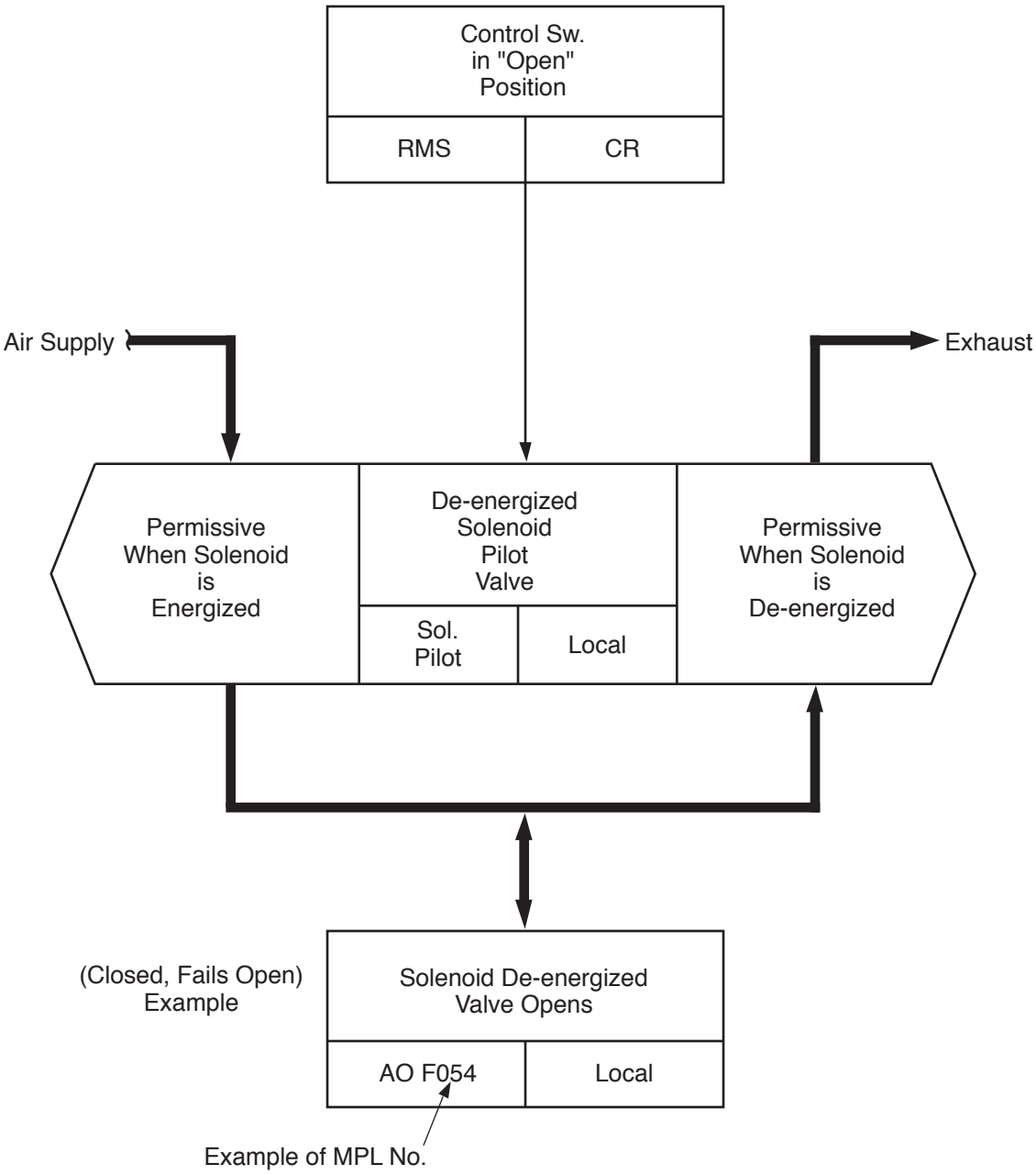

Typical A.O. Valve Example

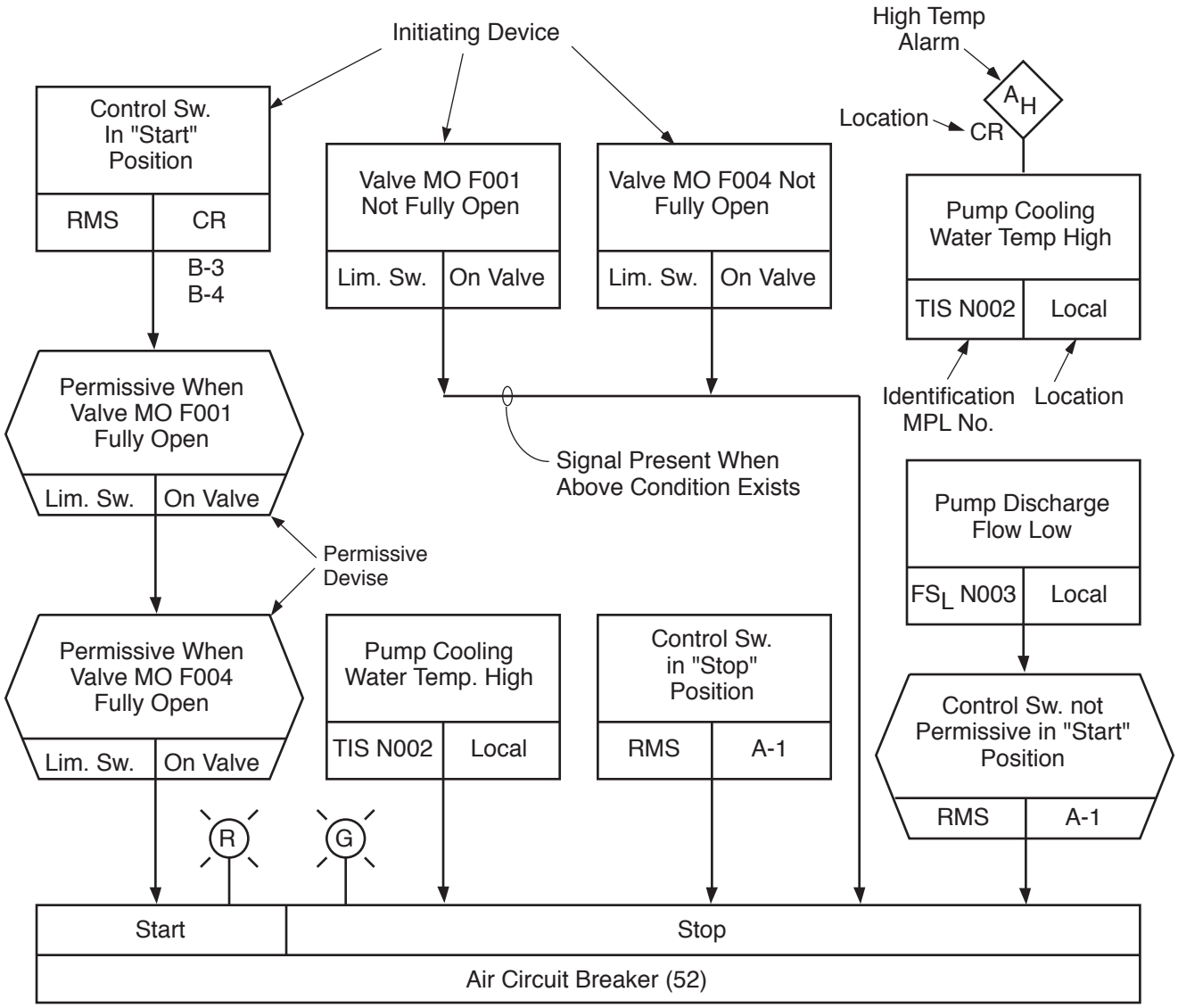

Columbia Generating Station Final Safety Analysis Report	**Logic Symbols for NSSS Functional Control Diagrams**		
	Draw. No. **950021.55**	Rev.	Figure **1.2-29.11**

Form No. 960690

Typical Flow Diagram Example

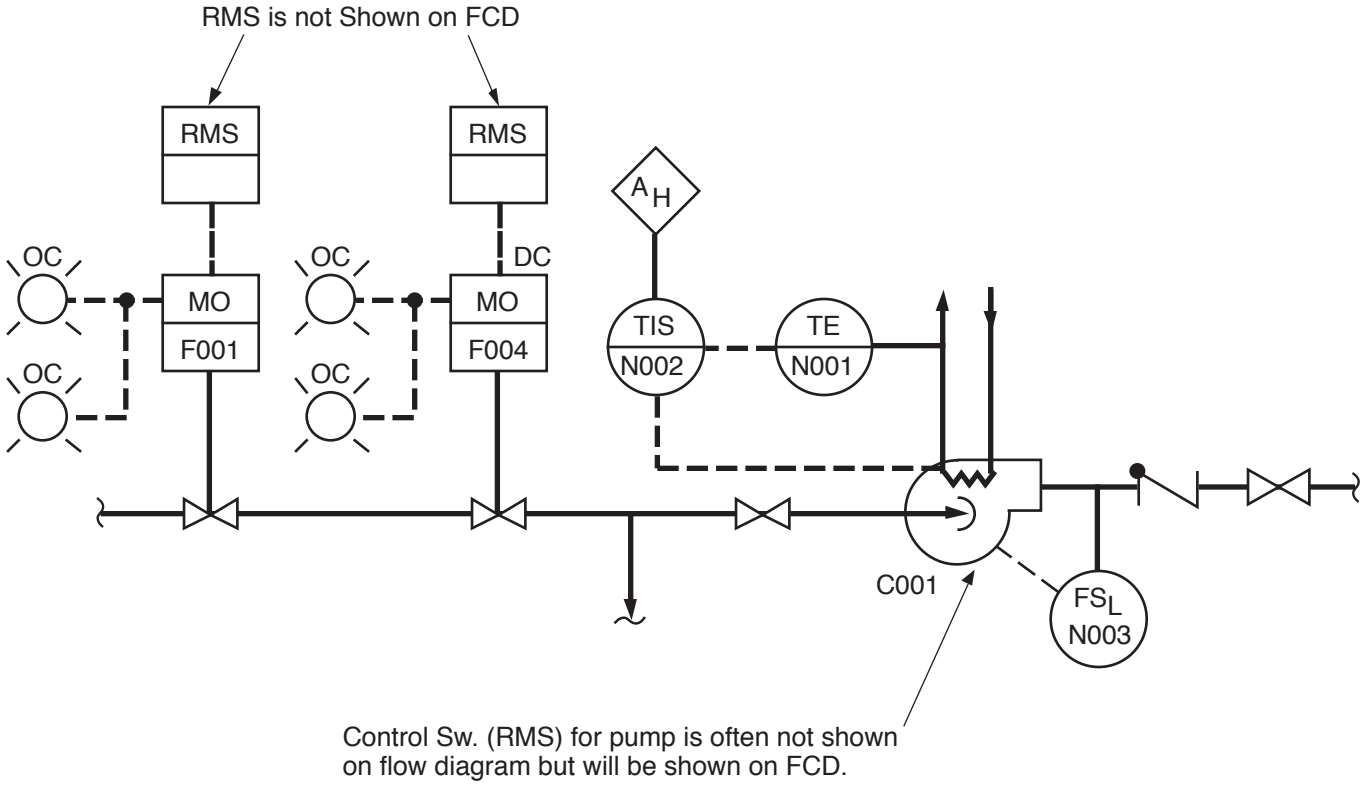

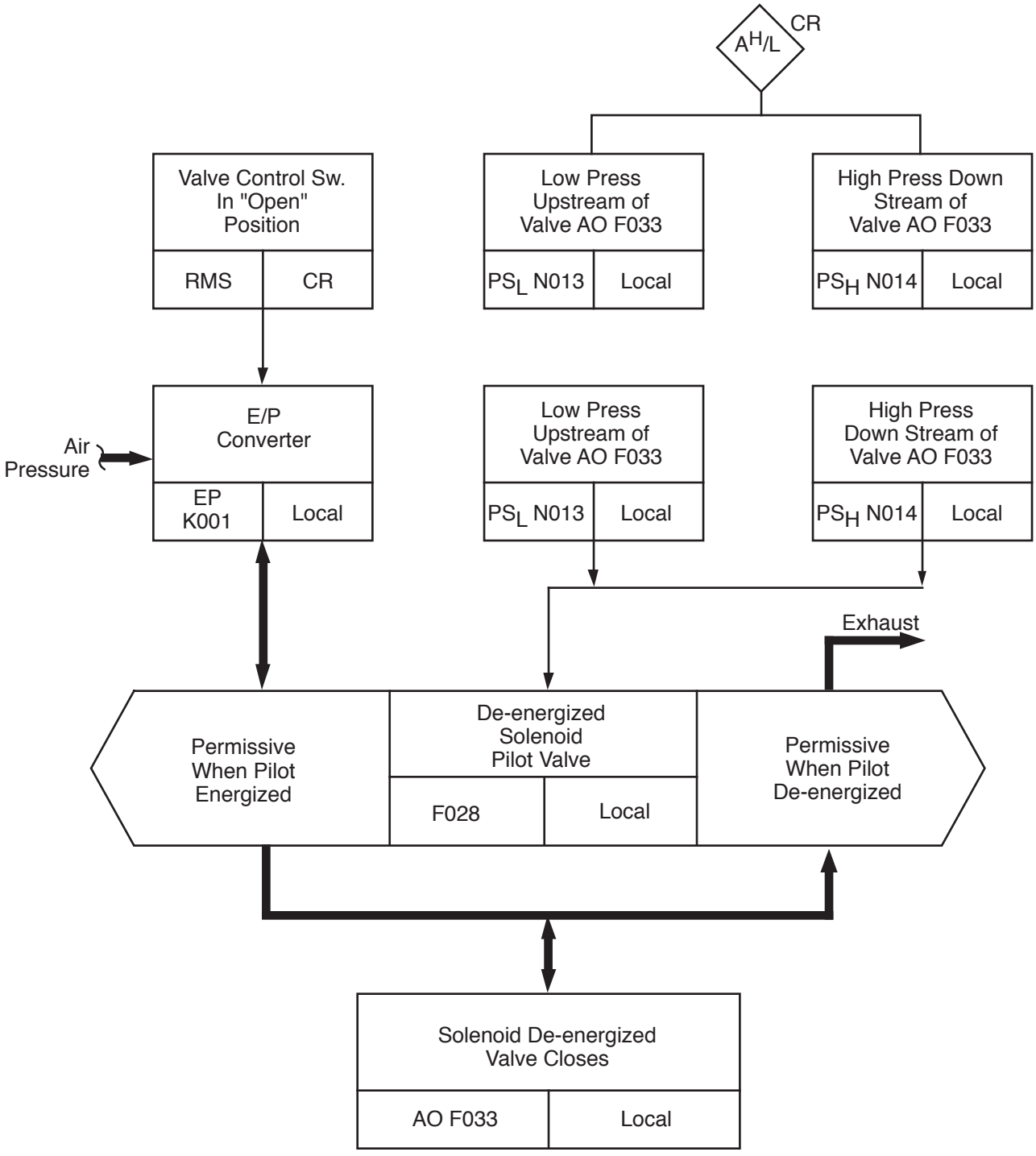

Bleed-off Flow Control Valve AO F033
Functional Control Diagram

Typical Flow Diagram Example

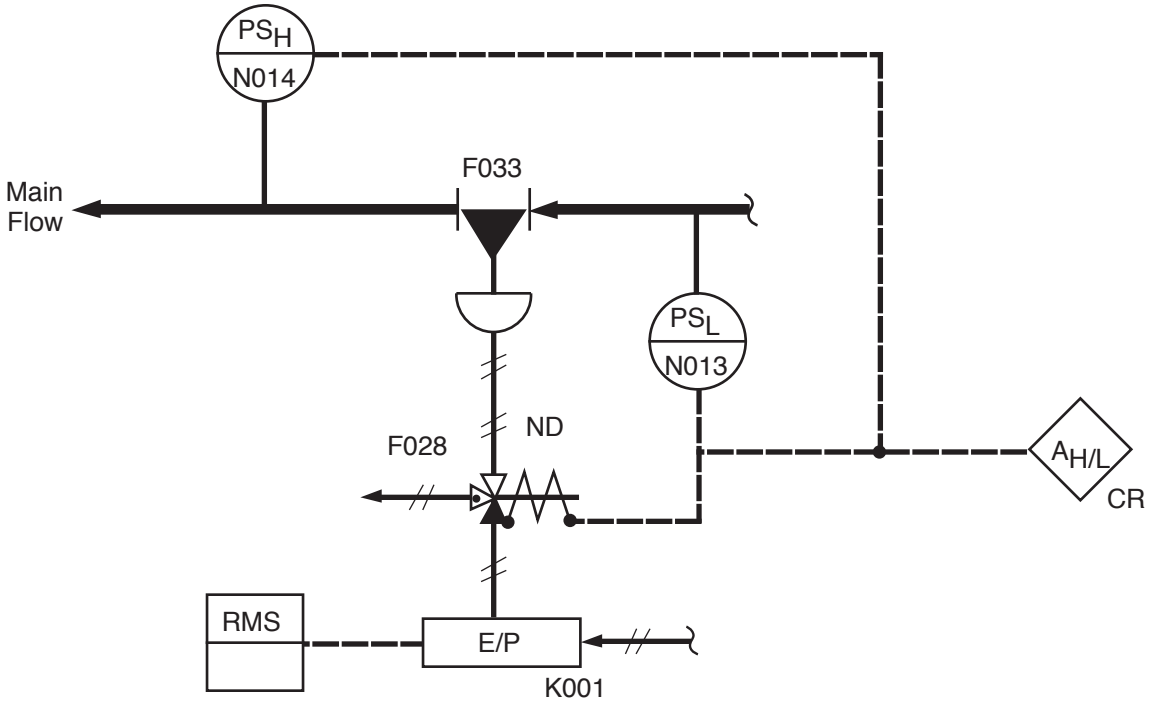

Notes: 1. Aux relays and devices are not shown on FCD.

This Figure is for a Typical Check Valve.

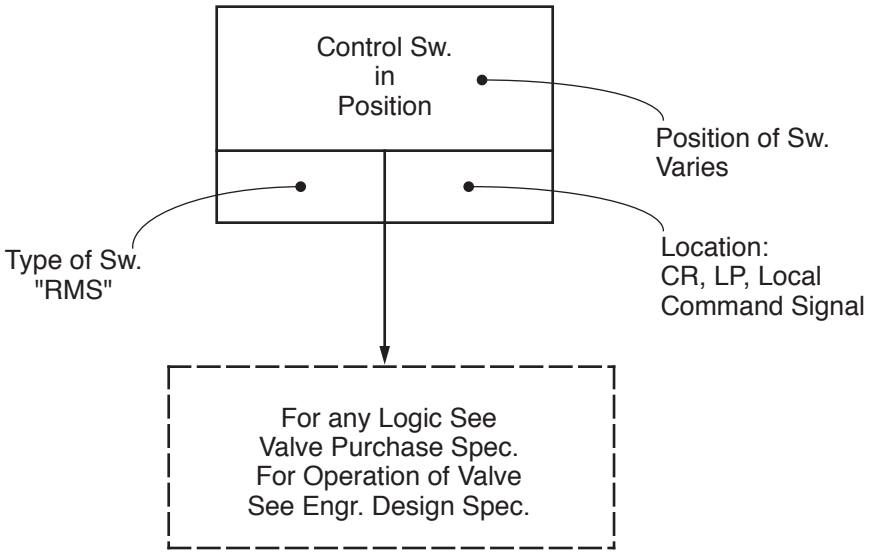

Testable Check Valve AO _ _ _ _

Reason for the above change is to have one standard logic for all testable check valve AO regardless of manufacturer.

1.3 COMPARISON TABLES

The italicized information is historical and was provided to support the application for an operating license.

1.3.1 COMPARISONS WITH SIMILAR FACILITY DESIGNS

This section highlights the principal design features of CGS and compares its major features with other boiling water reactor (BWR) facilities. The design of this facility is based on proven technology obtained during the development, design, construction, and operation of BWRs of similar types. The data, performance, characteristics, and other information presented here represent the design of the facilities at the time of the CGS operating license review.

1.3.1.1 Nuclear Steam Supply System Design Characteristics

Table 1.3-1 summarizes the design and operating characteristics for the nuclear steam supply systems. Parameters are related to rated power output for a single plant unless otherwise noted. The fuel thermal, hydraulic, and nuclear design data are that for the initial core load. Cycle specific data are provided in Chapter 4, Section 5.2, and Appendix 15F.

1.3.1.2 Power Conversion System Design Characteristics

Table 1.3-2 compares the power conversion system design characteristics.

1.3.1.3 Engineered Safety Features Design Characteristics

Table 1.3-3 compares the engineered safety features design characteristics.

1.3.1.4 Containment Design Characteristics

Table 1.3-4 compares the containment design characteristics.

1.3.1.5 Radioactive Waste Management Systems Design Characteristics

Table 1.3-5 compares the radioactive waste management design characteristics.

1.3.1.6 Structural Design Characteristics

Table 1.3-6 compares the structural design characteristics.

1.3.1.7 Electrical Power Systems Design Characteristics

Table 1.3-7 compares the electrical power systems design characteristics.

1.3.2 COMPARISON OF FINAL AND PRELIMINARY INFORMATION

Significant changes that have been made in the facility design since submission of the PSAR are listed in Table 1.3-8. Items in Table 1.3-8 are cross referenced to the appropriate portion of the FSAR that describes the changes and the bases for them.

Table 1.3-1

Comparison of Nuclear Steam Supply System Design Characteristics[a]

	CGS[b] *BWR 5 251-764*	*HATCH 1*[c] *BWR 4 218-560*	*ZIMMER*[c] *BWR 5 218-560*
Thermal and Hydraulic Design (see Section 4.4)			
Rated power (MWt)	*3323*	*2436*	*2436*
Design power (MWt) (ECCS design basis)	*3468*	*2550*	*2550*
Steam flow rate (1b/hr)	*14.295 x 10^6*	*10.03 x 10^6*	*10.477 x 10^6*
Core coolant flow rate (1b/hr)	*108.5 x 10^6*	*78.5 x 10^6*	*78.5 x 10^6*
Feedwater flow rate (1b/hr)	*14.256 x 10^6*	*10.445 x 10^6*	*10.477 x 10^6*
System pressure, nominal in steam dome (psia)	*1020*	*1020*	*1020*
Average power density (KW/liter)	*49.15*	*51.2*	*50.51*
Maximum thermal output (KW/ft)	*13.4*	*13.4*	*13.4*
Average thermal output (KW/ft)	*5.38*	*7.11*	*5.45*
Maximum heat flux (Btu/hr-ft^2)	*428,360*	*428,300*	*354,000*
Average heat flux (Btu/hr-ft^2)	*145,060*	*164,700*	*143,900*
Maximum UO_2 temperature (°F)	*4380*	*4380*	*3325*
Average volumetric fuel temperature (°F)	*1100*	*1100*	*1100*
Average cladding surface temperature (°F)	*558*	*558*	*558*
Minimum critical power ratio (MCPR)	*1.24*	*1.9*[d]	*1.21*
Coolant enthalpy at core inlet (Btu/1b)	*527.6*	*526.2*	*527.4*
Core maximum exit voids within assemblies	*79*	*79*	*75*
Core average exit quality (% steam)	*13.5*	*12.9*	*13.6*
Feedwater temperature (°F)	*420*	*387.4*	*420*
Design power peaking factor			
Maximum relative assembly power	*1.40*	*1.40*	*1.40*
Local peaking factor	*1.15*	*1.24*	*1.24*
Axial peaking factor	*1.40*	*1.5*	*1.4*
Total peaking factor	*2.51*	*2.6*	*2.43*

Table 1.3-1

Comparison of Nuclear Steam Supply System Design Characteristics[a] (Continued)

	CGS[b] BWR 5 251-764	*HATCH 1[c] BWR 4 218-560*	*ZIMMER[c] BWR 5 218-560*
Nuclear Design (First Core) (see Section 4.3)			
Water/UO_2 volume ratio (cold)	*2.55*	*2.53*	*2.41*
Reactivity with strongest control rod out (k_{eff})	*< 0.99*	*< 0.99*	*< 0.99*
Moderator void coefficient			
Hot, no voids ($\Delta k/k$ - %void)	*-1.0×10^{-3}*	*-1.0×10^{-3}*	*-1.0×10^{-3}*
At rated output ($\Delta k/k$ - %void)	*-1.6×10^{-3}*	*-1.6×10^{-3}*	*1.6×10^{-3}*
Fuel temperature doppler coefficient			
At 68°F ($\Delta k/k$ - °F fuel)	*-1.3×10^{-5}*	*-1.3×10^{-5}*	*-1.3×10^{-5}*
Hot, no voids ($\Delta k/k$ - °F fuel)	*-1.2×10^{-5}*	*-1.2×10^{-5}*	*-1.2×10^{-5}*
At rated output ($\Delta k/k$ - °F fuel)	*-1.3×10^{-5}*	*-1.3×10^{-5}*	*-1.3×10^{-5}*
Initial average ^{235}U enrichment wt (%)	*1.91*	*2.23*	*1.90*
Fuel average discharge exposure (MWd/short ton)	*10,300*	*19,000*	*15,053*
Core Mechanical Design (see Sections 4.2 and 7.6)			
Fuel assembly			
Number of fuel assemblies	*764*	*560*	*560*
Fuel rod array	*8 x 8*	*7 x 7*	*8 x 8*
Overall dimensions (in.)	*176*	*176*	*176*
Weight of UO_2 per assembly (lb) (pellet type)	*458 (chamfered)*	*490.4 (undished) 483.4 (dished)*	*465.15*
Weight of fuel assembly (lb)	*600*	*681 (undished) 675 (dished)*	*698*

Table 1.3-1

Comparison Of Nuclear Steam Supply System Design Characteristics[a] (Continued)

	CGS[b] BWR 5 251-764	*HATCH 1[c] BWR 4 218-560*	*ZIMMER[c] BWR 5 218-560*
Core Mechanical Design (see Sections 4.2 and 7.6) (Continued)			
Fuel rods (NEDE-20944P)			
Number per fuel assembly	*62*	*49*	*63*
Outside diameter (in.)	*0.483*	*0.563*	*0.493*
Cladding thickness (in.)	*0.032*	*0.032*	*0.034*
Cap. pellet to cladding (in.)	*0.0045*	*0.006*	*0.0045*
Length of gas plenum (in.)	*10*	*16*	*14*
Cladding material[e]	*Zircaloy-2*	*Zircaloy-2*	*Zircaloy-2*
Fuel pellets			
Material	*UO_2*	*UO_2*	*UO_2*
Density (% of theoretical)	*95*	*95*	*95*
Diameter (in.)	*0.410*	*0.487*	*0.416*
Length (in.)	*0.410*	*0.5*	*0.420*
Fuel channel			
Overall dimension, length (in.)	*166.9*	*166.9*	*166.9*
Thickness (in.)	*0.100*	*0.080*	*0.100*
Cross section dimensions (in.)	*5.494 x 5.494*	*5.44 x 5.44*	*5.48 x 5.48*
Material	*Zircaloy-4*	*Zircaloy-4*	*Zircaloy-4*
Core assembly			
Fuel weight as UO_2 (1b)	*349,900*	*272,850*	*260,538*
Core diameter (equivalent) (in.)	*187.1*	*160.2*	*160.2*
Core height (active fuel) (in.)	*150*	*144*	*146*

Table 1.3-1

Comparison of Nuclear Steam Supply System Design Characteristics[a] (Continued)

	CGS[b] BWR 5 251-764	*HATCH 1[c] BWR 4 218-560*	*ZIMMER[c] BWR 5 218-560*
Core Mechanical Design (see Sections 4.2 and 7.6) (Continued)			
Reactor control system			
Method of variation of reactor power	*Movable control rods and variable forced coolant flow*	*Movable control rods and variable forced coolant flow*	*Movable control rods and variable forced coolant flow*
Number of movable control rods	*185*	*137*	*137*
Shape of movable control rods	*Cruciform*	*Cruciform*	*Cruciform*
Pitch of movable control rods	*12.0*	*12.0*	*12.0*
Control material in movable rods	*B_4C granules compacted in SS tubes*	*B_4C granules compacted in SS tubes*	*B_4C granules compacted in SS tubes*
Type of control rod drives	*Bottom entry locking piston*	*Bottom entry locking piston*	*Bottom entry locking piston*
Type of temporary reactivity control for initial core	*Burnable poison; gadoliniaurania fuel rods*	*Burnable poison; gadoliniaurania fuel rods*	*Burnable poison; gadoliniaurania fuel rods*
In-core neutron instrumentation			
Number of in-core neutron detectors (fixed)	*172*	*124*	*124*
Number of in-core detector assemblies	*43*	*31*	*31*
Number of detectors per assembly	*4*	*4*	*4*
Number of flux mapping neutron detectors	*5*	*4*	*4*

Table 1.3-1

Comparison of Nuclear Steam Supply System Design Characteristics[a] (Continued)

	CGS[b] BWR 5 251-764	*HATCH 1[c] BWR 4 218-560*	*ZIMMER[c] BWR 5 218-560*
Core Mechanical Design (see Sections 4.2 and 7.6) (Continued)			
In-core neutron instrumentation (Continued)			
Range (and number) of detectors			
Source range monitor	*Source to 0.001% power (4)[f]*	*Source to 0.001% power (4)[f]*	*Source to 0.001% power (4)[f]*
Intermediate range monitor	*0.001% to 10% power (8)[f]*	*0.001% to 10% power (8)[f]*	*0.001% to 10% power (8)[f]*
Local power range monitor	*5% to 125% power (172)[f]*	*5% to 125% power (124)[f]*	*5% to 125% power (124)[f]*
Average power range monitor	*2.5% to 125% power (6)[f]*	*2.5% to 125% power (6)[f]*	*2.5% to 125% power (6)[f]*
Number and type of in-core neutron sources	*7 Sb-Be*	*5 Sb-Be*	*5 Sb-Be*
Reactor Vessel Design (see Section 5.3)			
Material	*Carbon steel stainless clad*	*Carbon steel stainless clad*	*Carbon steel stainless clad*
Design pressure (psig)	*1250*	*1265*	*1250*
Design temperature (°F)	*575*	*575*	*575*
Inside diameter (ft-in.)	*20-11*	*18-2*	*18-2*
Inside height (ft-in.)	*72-11*	*69-4*	*69-4*
Minimum base metal thickness (cylindrical section) (in.)	*6.75*	*5.53*	*5.375*
Minimum cladding thickness (in.)	*1/8*	*1/8*	*1/8*

Table 1.3-1

Comparison Of Nuclear Steam Supply System Design Characteristics[a] (Continued)

	CGS[b] BWR 5 251-764	HATCH 1[c] BWR 4 218-560	ZIMMER[c] BWR 5 218-560
Reactor Coolant Recirculation Design (see Sections 5.1, 5.2, and 5.4)			
Number of recirculation loops	2	2	2
Design pressure:			
Inlet leg (psig)	1250	1148	1250
Outlet leg (psig)	1650;[g] 1550[h]	1274	1675;[g] 1575[h]
Design temperature (°F)	575	562	575
Pipe diameter (in.)	24	28	20
Pipe material (ANSI)	304/316	304/316	304/316
Recirculation pump flow rate (gpm)	47,200	42,200	33,880
Number of jet pumps in reactor	20	20	20
Main Steam lines (see Section 5.4)			
Number of steam lines	4	4	4
Design pressure (psig)	1250	1146	1250
Design temperature (°F)	575	563	575
Pipe diameter (in.)	26	24	24
Pipe material	Carbon steel	Carbon steel	Carbon steel

[a] *Parameters are related to rated power output for a single plant unless otherwise noted.*
[b] *See Section 1.3.1 regarding the status of the data presented here.*
[c] *Values correspond to original licensing.*
[d] *For Hatch, minimum critical heat flux ratio (MCHFR) was used.*
[e] *Free-standing loaded tubes.*
[f] *Channels of monitors from LPRM detectors.*
[g] *Pump and discharge piping to and including discharge block valve.*
[h] *Discharge piping from discharge block valve to vessel.*

Table 1.3-2

Comparison of Power Conversion System Design Characteristics

	CGS BWR 5 251-764	*HATCH I[a] BWR 4 218-560*	*ZIMMER[a] BWR 5 218-560*
Turbine Generator (see Sections 10.2 and 10.4)			
Rated power (MWt)	*3468[b]*	*2550*	*2550*
Rated power (MWe) (gross)	*1205[b]*	*813*	*883*
Generator Speed (rpm)	*1800*	*1800*	*1800*
Rated steam flow (1b/hr)	*15.018 x 10^{6}[b]*	*10.48 x 10^{6}*	*11.0 x 10^{6}*
Inlet pressure (psia)	*955*	*950*	*950*
Steam Bypass System (see Section 10.4.4)			
Capacity (% design steam flow)	*25*	*25*	*25*
Main Condenser (see Section 10.4.1)			
Heat removal capacity (Btu/hr)	*7702 x 10^{6}*	*5720 x 10^{6}*	*7053 x 10^{6}*
Circulating Water System (see Section 10.4.5)			
Number of pumps	*3*	*2*	*3*
Flow rate (gpm/pump)	*186,000*	*185,000*	*150,000*
Condensate and Feedwater System (see Section 10.4.7)			
Design flow rate (1b/hr)	*14.26 x 10^{6}*	*10.096 x 10^{6}*	*10.971 x 10^{6}*
Number of condensate pumps	*3*	*3*	*3*
Number of condensate booster pumps	*3*	*3*	*3*
Number of feedwater pumps	*2*	*2*	*2*
Number of feedwater booster pumps	*None*	*None*	*None*
Condensate pump drive	*ac power*	*ac power*	*ac power*
Booster pump drive	*ac power*	*ac power*	*ac power*
Feedwater pump drive	*Turbine*	*Turbine*	*Turbine*

[a] *Values correspond to original licensing.*
[b] *Maximum calculated value.*

Table 1.3-3

Comparison of Engineered Safety Features
Design Characteristics

	CGS *BWR 5* *251-764*	*HATCH I* *BWR 4* *218-560*	*ZIMMER* *BWR 5* *218-560*
Emergency Core Cooling Systems *(systems sized on design power)* *(see Section 6.3)*			
Low pressure core spray systems			
Number of loops	*1*	*2*	*1*
Flow rate (gpm)	*6350 at 128 psid*	*4625 at 120 psid*	*4725 at 119 psid*
High pressure core spray system			
Number of loops	*1*	*1*[a]	*1*
Flow rate (gpm)	*1550 at 1130 psid* *6350 at 200 psid*	*4250*	*1330 at 1110 psid* *4725 at 200 psid*
Automatic depressurization system			
Number of relief valves	*7*	*7*	*7*
Low pressure coolant injection[b]			
Number of loops	*3*	*2*	*3*
Number of pumps	*3*	*4*	*3*
Flow rate (gpm/pump)	*7450 at 26 psid*	*7700 at 20 psid*	*5050 at 20 psid*
Residual Heat Removal System *(see Section 5.4.7)*			
Reactor shutdown cooling mode:			
Number of loops	*2*	*2*	*2*
Number of pumps	*2*	*4*	*2*
Flow rate (gpm/pump)[c]	*7450*	*7700*	*5050*
Duty (Btu/hr/heat exchanger)[d]	*41.6 x 10^6*	*32 x 10^6*	*30.8 x 10^6*
Number of heat exchangers	*2*	*2*	*2*
Primary containment cooling mode:			
Flow rate (gpm)	*7450*[e]	*30,800*	*5050*[e]

Table 1.3-3

Comparison of Engineered Safety Features
Design Characteristics (Continued)

	CGS *BWR 5* *251-764*	*HATCH I* *BWR 4* *218-560*	*ZIMMER* *BWR 5* *218-560*
Standby Service Water System *(see Section 9.2.7)*			
Flow rate (gpm/heat exchanger)	*7400*	*8000*	*5000*
Number of pumps	*3*[f]	*4*	*4*
Reactor Core Isolation Cooling System *(see Section 5.4.6)*			
Flow rate (gpm)	*600 at* *1150 psid*	*400 at* *1120 psid*	*400 at* *1120 psid*
Fuel Pool Cooling and Cleanup System *(see Section 9.1.3)*			
Capacity (Btu/hr)	*8.0×10^6*	*5.7×10^6*	*6.6×10^6*

[a] *High-pressure coolant injection system utilized.*
[b] *A mode of RHR system.*
[c] *Capacity during reactor flooding mode with more than one pump running.*
[d] *Heat exchanger duty at 20 hr following reactor shutdown.*
[e] *Flow per heat exchanger.*
[f] *Includes HPCS service water pumps.*

Table 1.3-4

Comparison of Containment Design Characteristics

	CGS BWR 5 251-764	*HATCH 1 BWR 4 218-560*	*ZIMMER BWR 5 218-560*
Primary Containment[a] *(see Sections 3.8.2 and 6.2.2)*			
Type	*Over and under pressure suppression*	*Pressure suppression*	*Over and under pressure suppression*
Construction	*Steel-free standing*	*Steel-free standing*	*Concrete pre-stressed with steel liner*
Drywell	*Frustum of cone upper portion*	*Light bulb/steel vessel*	*Frustum of cone upper portion*
Pressure-suppression chamber	*Cylindrical lower portion with elliptical bottom*	*Torus/steel vessel*	*Cylindrical lower portion*
Pressure-suppression chamber internal design pressure (psig)	*45*	*56*	*45*
Pressure-suppression chamber external design pressure (psi)	*2*	*2*	*2*
Drywell internal design pressure (psig)	*45*	*56*	*45*
Drywell external design pressure (psi)	*2*	*2*	*2*
Drywell free volume (ft^3)	*200,540*[b]	*146,240*	*180,000*
Pressure-suppression chamber free volume (ft^3)	*144,184 max*	*110,950*	*93,000*
Pressure-suppression pool water volume (ft^3)	*112,197 min*[c]	*87,300*	*102,000*
Submergence of downcomer vent pipe below pressure pool surface (ft)	*12 max. 11.67 min.*	*3.67*	*10*
Design temperature of drywell (°F)	*340*	*281*	*340*
Design temperature of pressure-suppression chamber (°F)	*275*	*281*	*275*
Downcomer vent pipe pressure loss factor	*1.9*	*6.21*	*2.17*
Break area/total vent area	*0.105*	*0.0194*	*0.008*

Table 1.3-4

Comparison of Containment Design Characteristics (Continued)

	CGS BWR 5 251-764	*HATCH 1 BWR 4 218-560*	*ZIMMER BWR 5 218-560*
Primary Containment[a] *(see Sections 3.8.2 and 6.2.2) (Continued)*			
Calculated maximum pressure after blowdown to dwell (no pre-surge) (psig)	*34.7*	*46.5*	*40.4*
Pressure-suppression chamber (psig)	*27.6*	*28*	*35.6*
Initial pressure-suppression pool temperature rise (°F)	*35*	*50*	*35*
Leakage rate (% free volume/day at 45 psig and 200°F)	*0.5*	*1.2 at 59 psig*	*0.635*
Secondary Containment (see Sections 3.8.4 and 6.2.3)			
Type	*Controlled leakage, elevated release*	*Controlled leakage, elevated release*	*Controlled leakage, elevated release*
Construction			
Lower levels	*Reinforced concrete*	*Reinforced concrete*	*Reinforced concrete*
Upper levels	*Steel super-structure and siding*	*Steel super-structure and siding*	*Steel super-structure and siding*
Roof	*Steel decking*	*Steel decking*	*Steel decking*
Internal negative design pressure (in. H_2O)	*0.25*	*0.25*	*0.25*
Design inleakage rate (% free volume/day at 0.25 in. H_2O)	*100*	*100*	*100*

[a] *Where applicable, containment parameters are based on design power.*
[b] *Maximum water level in suppression pool.*
[c] *Does not include the water within the reactor pedestal (10,065 ft^3) or the 12 ft of water below the downcomer vent pipe exits (15,000 ft^3).*

Table 1.3-5

Radioactive Waste Management Systems
Design Characteristics

	CGS BWR 5 251-764	*HATCH 1 BWR 4 218-560*	*ZIMMER BWR 5 218-560*
Gaseous Radwaste (see Section 11.3)			
Design Bases (noble gases μCi/sec)	*100,000 at 30 minutes*	*100,000 at 30 minutes*	*100,000 at 30 minutes*
Process treatment	*Low temperature charcoal*	*Recombiner ambient charcoal*	*Chilled charcoal*
Number of beds	*8*	*12*	*5*
Design condenser in-leakage (cfm)	*30*	*40*	*12.5*
Release point - height above ground (ft)	*230*	*394*	*172*
Liquid Radwaste (see Section 11.2)			
Treatment of			
1. Floor drains[a]	*F, D, and R*	*F, D, and R*	*F, E, and R*
2. Equipment drains[a]	*F, D, and R*	*F, D, and R*	*F, D, and R*
3. Chemical drains[a]	*Neutralized, E, D, and R*	*F, discharged E, solid to radwaste*	*E, D, concentrates to solid radwaste distillate R*
4. Detergent drains[a]	*Chemical addition, F, E, and sent to circulating water discharge*[b]	*Diluted and sent to circulating water discharge*	*Reverse osmosis discharge*
5. Expected annual average release (μCi) (excluding tritium)	*170*	*2000*	*1.09*

[a] *Legend:*
D = demineralized.
F = filtered.
E = evaporator/concentrator.
R = recycled, i.e., returned to condensate storage.

[b] *Laundry will be processed offsite by authorized contractor.*

Table 1.3-6

Comparison of Structural Design Characteristics

	CGS BWR 5 251-764	*HATCH 1 BWR 4 218-560*	*ZIMMER BWR 5 218-560*
Seismic Design (see Section 3.7)			
Operating basis earthquake (horizontal g)	*0.125*	*0.08*	*0.10*
Safe shutdown earthquake (horizontal g)	*0.250*	*0.15*	*0.20*
Wind Design (see Section 3.3)			
Maximum sustained (mph)	*100*	*105*	*90*
Tornados[*] *(see Section 3.3)*			
Translational (mph)	*60*	*60*	*60*
Tangential (mph)	*300*	*300*	*300*

[*]Historical Reference Only, see Section 3.3.2.1 for applicable design parameters.

Table 1.3-7

Comparison of Electrical Systems Design Characteristics

	CGS[a] *BWR 5 251-764*	*HATCH 1 BWR 4 218-560*	*ZIMMER BWR 5 218-560*
Transmission System (see Section 8.2)			
Outgoing lines (number - rating)	*1 - 500 kV*	*4 - 230 kV*	*3 - 345 kV*
Normal auxiliary ac power			
Incoming lines (number - rating)	*1 - 230 kV 1 - 115 kV*	*4 - 230 kV*	*1 - 69 kV 1 - 345 kV*
Normal auxiliary transformers	*2*	*2*	*1 (unit auxiliary)*
Startup/backup auxiliary transformers	*2*	*2*	*2*
Standby ac power supply			
Number of diesel generators	*3*[b]	*3*[c]	*3*
Number of 4160-V shutdown (Class 1E) buses	*3*[b]	*3*	*3*
Number of 480-V shutdown (Class 1E) buses	*5*[b]	*2 (600 V)*	*5*
Power Supply (dc) (see Section 8.3.2)			
Number of 24-V batteries	*4*	*2 (48 V)*	
Number of 125-V batteries	*6*[d]	*3*	*3*
Number of 250-V batteries	*1*	*2*	*1*
Number of 24-V buses	*2*	*2 (24/48 V)*	
Number of 125-V buses	*6*[d]	*3*	*3*
Number of 250-V buses	*1*	*2*	*1*

[a] *Does not include 450-V dc security system.*
[b] *HPCS system included.*
[c] *Total of five for two units.*
[d] *HPCS battery and bus included.*

Table 1.3-8

Significant Design Changes from PSAR to FSAR

Item	*Change*	*Reason for Change*	*FSAR Portion in Which Change is Discussed*
Offgas system class change	*The offgas system components are Quality Group C, whereas the system components were described in the PSAR as being Quality Group D.*	*Improve assurance of system integrity.*	*11.3.1*
Control rod drive position indication	*Changed to 11 wire probe and solid state.*	*Improved reliability and increased frequency of checking actual rod position.*	*7.7.1*
Control rod drive system	*Deleted CRD return line and pump test bypass, revised cooling and exhaust water headers, added relief valves interconnecting cooling water and exhaust headers, redirected system exhaust flow through the multiple solenoid valves in each HCU.*	*GE recommendation.*	*4.6.1.1.2.4*
Recirculation pump and motor	*The flow rate and horsepower required has been reduced; voltage has changed from 4160 V to 6600 V. A low-frequency motor generator set was added to provide 25% speed.*	*Detailed system.*	*5.4.1*
Jet pumps	*The jet pump design was changed to improve five-hole type.*	*Design improvement, increased efficiency.*	-
Recirculation flow measurement	*The recirculation flow measurement design was changed from a flow element to an elbow-tap type.*	*To improve flow measurement accuracy.*	*7.3.1*
Recirculation system	*The pressure interlock for RHR injection was changed.*	*IEEE-279 requirements.*	*7.3.1, 7.6.1*
Recirculation system	*Bypass line around reactor recirculation system flow control valve was eliminated.*	*Reduce the possibility of cavitation and cracking of piping in the recirculation system. Need eliminated by addition of low frequency motor generator set.*	

Table 1.3-8

Significant Design Changes from PSAR to FSAR (Continued)

Item	*Change*	*Reason for Change*	*FSAR Portion in Which Change is Discussed*
Nuclear fuel	*The number of fuel pins in each fuel bundle has been changed from 7 x 7 to 8 x 8 (including two water rods).*	*Improved fuel performance by increasing safety margins.*	*4.2*
Nuclear boiler	*A turbine building high temperature trip for MSIVs was added.*	*Improve leak detection capability.*	*7.3.1*
Nuclear boiler	*An additional test mode was added for closing MSIVs one at a time to 90% of full open in the fast mode (close in slow mode already existed).*	*Verifies that the spring force on the valves will cause them to close under loss-of-air conditions.*	*5.4.5*
Main steam line isolation	*A main condenser low vacuum initiation of the main steam line isolation was added.*	*NRC requirement.*	*7.3.1*
Main steam line isolation	*Reactor isolation was deleted for reactor high water level.*	*To provide improved plant availability.*	*5.4.5*
Main steam line drain system	*A main steam line drain system was improved.*	*Prevent accumulation of condensate in an idle line outboard of MSIV.*	*5.1.1*
RPV code	*The RPV code was updated to ASME 1971 and Summer 1971 addenda.*	*Update to applicable code as much as possible.*	*5.2.1*
Level instrumentation	*The RPV level instrumentation was revised to eliminate Yarway columns and replace them with a conventional condensing chamber type; also, separation and redundancy features were added.*	*Improve ECCS separation per IEEE-279 and improve reliability.*	*7.3.1*
Turbine seal setpoint pressure	*The turbine seal setpoint pressure was changed from 50 psia to 125 psia.*	*Ensures that main turbine condenser can extract reactor steam at temperature above cooling capability of RWCU system.*	-
Leak detection system	*The leak detection system was revised to upgrade the capability and incorporate the requirements of IEEE-279.*	*To meet IEEE-279 requirements.*	*7.6.1*

Table 1.3-8

Significant Design Changes from PSAR to FSAR (Continued)

Item	*Change*	*Reason for Change*	*FSAR Portion in Which Change is Discussed*
Reactor vibration monitoring	*A confirmatory vibration monitoring test was added.*	*NRC requirement.*	*14.2.12.3.34*
RWCU system sample station	*The P&IDs were changed to provide continuous monitoring.*	*Technical Specifications requirements.*	-
LPCS system	*Valve F011 was changed from air-operated to motor-operated control.*	*To provide Seismic Category I rated control power to this essential active component.*	*7.3.1.1.1.3*
LPCS system	*Direct connection to condensate storage replaced by removable spool piece connection to RHR.*	*Condensate used only for system commissioning tests.*	*Figure 6.3-5*
PRT replaced by RPT	*Prompt relief trip (PRT) was replaced by recirculation pump trip (RPT) for quick insertion of negative reactivity.*	*Increased reliability.*[a]	*7.6.1.5*
Main steam system	*Relief valve augmented bypass (REVAB) was deleted.*	*Licensing requirement.*[a]	-
Feedwater sparger	*The thermal sleeve was changed to provide welded design of sparger to nozzle.*	*To eliminate vibration, failure, and leakage.*	*5.3*
Standby liquid control (SLC) system	*Interlocks on the SLC system were revised.*	*To prevent inadvertent boron injection during system testing.*	*7.4.1, 9.3.5*
Standby liquid control (SLC) system	*RCPB extended to explosive valves*	*To meet isolation criteria.*	-
RCIC steam supply	*A warmup bypass line and valve was added.*	*Permits pressurizing and prewarming of the steam supply line downstream to the turbine during reactor vessel heatup.*	*5.4.6*
RCIC vacuum breaker system	*A vacuum breaker system was added to the RCIC turbine exhaust line into the suppression pool.*	*To prevent backup of water in the pipe and consequential high dynamic pipe loads and reactions.*	*5.4.6*

Table 1.3-8

Significant Design Changes from PSAR to FSAR (Continued)

Item	*Change*	*Reason for Change*	*FSAR Portion in Which Change is Discussed*
RCIC system	*Each component has been made capable of functional testing during normal plant operation.*	*Improved testability.*	*5.4.6*
Automatic depressurization system (ADS)	*The interlocks on the automatic depressurization system were revised.*	*To meet lEEE-279 requirements.*	*7.3.1*
RPV support	*The support for the RPV was changed from a ring girder to a bearing plate.*	*Provides a better seismic and alignment capability.*	*5.3.3.1.4.1*
Plant service water pumps	*Upon loss of offsite power without a LOCA, the normal 4160 V service buses (SM-75, SM-85), are connected to SM-7 and SM-8 to provide automatic starting of a plant service water pump for drywell cooling.*	*Provides service water for drywell cooling automatically after loss of offsite power without a LOCA.*	*Figure 8.1-2, Tables 8.3-1 and 8.3-2*
Reactor building cooling system	*ESF cooling units have been added to critical electric equipment areas in the reactor building.*	*To provide suitable ambient temperature conditions for essential electrical and control equipment located in the reactor building in the event of a LOCA.*	*9.4.9*
Standby gas treatment system	*Added second fan (powered from alternate power bus) to each standby gas treatment system.*	*To remove need for crosstie between the two systems.*	*6.5.1.2*
Standby gas treatment system	*Added facility to recirculate air from SGTS back into reactor building.*	*So that potential decay heat in filter can be removed without discharge to atmosphere in event of divisional power failure.*	*6.5.1.2*
Standby gas treatment system	*Added second electric preheater (powered from alternate power bus) to each SGTS unit.*	*To provide means of controlling relative humidity of air entering charcoal filter in event of primary heater or divisional power failure.*	*6.5.1.2*

Table 1.3-8

Significant Design Changes from PSAR to FSAR (Continued)

Item	*Change*	*Reason for Change*	*FSAR Portion in Which Change is Discussed*
Control room HVAC system	*Added two remote air intakes for pressurizing control room in event of a LOCA.*	*To limit doses to operating personnel to limits of 10 CFR 50.*	*9.4.1.2*
Ventilation system for areas in which essential cable is routed	*Added to ESF ventilation system to ventilate corridors and cable chases through which essential cable is routed (diesel generators to control room).*	*To provide suitable ambient temperatures for essential cable in the event of a LOCA*	*9.4.8*
Offgas system charcoal vault	*Added a refrigeration system to the vault in which the offgas system charcoal adsorber filters are housed.*	*To maintain charcoal adsorbers at a temperature of 0°F.*	*9.4.5, 11.3.2.1*
Makeup water pumps transformer vault ventilation	*Added a ventilation system to makeup water pump transformer rooms powered from the emergency buses.*	*To ensure suitable ambient temperatures for transformers in the event of a loss of offsite power caused by a tornado.*	*9.4.6*
Radioactive waste solidification process	*Cement-sodium silicate solidification process to be used in lieu of urea-formaldehyde process.*	*To eliminate the generation of free water in solidified containers, a problem inherent to the urea-formaldehyde process.*	*11.4*
Air ejector	*Three-stage air ejector to two-stage air ejector.*	*Manufacturer offered a two-stage unit that meets the same operating conditions.*	*10.4.2*
Sealing steam supply	*The gland steam evaporator will produce sealing steam using main steam on its tube side during startup and shutdown modes. PSAR stated auxiliary boiler would be used.*	*Adequate sealing steam can be produced with main steam pressure down to 125 psig.*	*10.4.3*
Containment instrument air	*The CIA air compressors were removed and the system is now supplied with nitrogen during reactor operation. Redundant bottled gas supply utilized for supplying ADS valve accumulators for accident conditions.*	*The purpose of the safety related bottled gas supplies is to back up the non-safety-related cryogenic nitrogen supply.*	*9.3.1.1.2*

Table 1.3-8

Significant Design Changes from PSAR to FSAR (Continued)

Item	*Change*	*Reason for Change*	*FSAR Portion in Which Change is Discussed*
Offgas holdup line	*Radiography of circumferential welds was not done.*	*A partial section of the line was buried before radiography was done. Welds were magnetic particle tested and line was hydro-tested at 1200 psig and then helium pressure decay leak tested with a sensitivity of 10^{-2} cm^3/sec.*	-
Wet solid radwastes	*Packaged in 50 ft^3 containers rather than 50-gal drums.*	*Reduce handling time and operator exposure.*	*11.4.2.10*
Turbine bypass valve system	*Four bypass valves are used rather than three.*	*Solution to operating problems with bypass valves on Cooper Nuclear station.*	*10.4.4*
Main steam isolation valve leakage control system	*Added to plant.*	*NRC requirement.*	*6.7*
Main steam line from outermost isolation valve to turbine stop valve	*Piping has been upgraded from Code Group D to Code Group B.*	*NRC requirement.*	*10.3.2*
Radwaste tank sizes			
1. Waste sludge phase separator	*From 12,500 to 13,000 gal.*	*To increase capacity.*	*Table 11.4-4*
2. Chemical waste tank	*From 13,000 to 15,000 gal.*	*To increase capacity.*	*Table 11.2-13*
3. Decontamination solution concentrated waste tank	*From single 700-gal to two 700-gal tanks.*	*To provide spare tank.*	*Table 11.4-4*

Table 1.3-8

Significant Design Changes from PSAR to FSAR (Continued)

Item	*Change*	*Reason for Change*	*FSAR Portion in Which Change is Discussed*
4. Concentrated waste measuring tank	*From 100 to 400 gal.*	*Due to increase in shipment container size from 50 gal to 50 ft^3.*	*Table 11.4-4*
5. Condensate phase separators	*From 12,500 to 23,500 gal.*	*To increase capacity in event of higher than normal backwash requirements.*	*Table 11.4-4*
6. Chemical addition tank	*From single 1000-gal tank to two 200-gal tanks.*	*To provide capability for both acid and caustic addition from separate tanks. Original tank oversized.*	*Table 11.2-13*
Floor drain system	*Influent waste radionuclide concentration changed from range of10^{-4} to 10^{-2} µCi/ml to on order of 10^{-1} µCi/ml.*	*Reevaluation of source terms.*	*11.2.2.2.2*
Liquid radwaste system	*GALE code was used to calculate radioactive discharges with 2500-gpm blowdown. Blowdown of 4000 gpm was used in the PSAR.*	*NRC requirement to use GALE Code. Change in blowdown results in more conservative (higher) radionuclide concentrations.*	*11.2.3.2*
Cleaning of filters	*Changed from steam cleaning connections to chemical cleaning system.*	*Design improvement.*	*Figure 10.4-5*
Missiles from tornadoes	*Selection of credible missiles.*	*For FSAR, followed specific missiles identified in NRC Standard Review Plan.*	*3.5.1.4*
Cleaning of filters	*Changed from steam cleaning connections to chemical cleaning system.*	*Design improvement.*	*Figure 10.4-5*
Missiles from tornadoes	*Selection of credible missiles.*	*For FSAR, followed specific missiles identified in NRC Standard Review Plan.*	*3.5.1.4*
Primary containment vessel	*New loads due to hydro-dynamic effects of safety/relief valve actuation and LOCA (neither in PSAR or FSAR; see Dynamic Analysis Report).*	*To accommodate new GE load requirements.*	*3.8.2*

Table 1.3-8

Significant Design Changes from PSAR to FSAR (Continued)

Item	*Change*	*Reason for Change*	*FSAR Portion in Which Change is Discussed*
Diesel generator building fire protection system	*Changed from CO_2 system to dry pipe preaction system. after a fire.*	*To provide accessibility to the diesel immediately. Also availability of unlimited water supply*	*Appendix F*
Cable chase fire protection system	*Added dry pipe preaction system for cable chase and diesel generator building corridor.*	*To protect divisional cable concentrations in these areas.*	*Appendix F*
500-kV line	*Hookstick changed to motor-operated switch.*	*Available standard switches are supplied with motor operators.*	*Fig. 8.1-2*
500-kV line	*Line terminates at H. J. Ashe Swtichyard rather than Hanford Switching Station.*	*BPA revisions to 500 kV grid.*	*8.1.2*
230-kV line	*Deleted hookstick and 230-kV OCB at plant switchyard.*	*OCB relocated to H. J. Ashe Switchyard.*	*Fig. 8.1-2*
115-kV line	*Replace circuit interrupter with 115-kV circuit breaker at plant switchyard.*	*Equipment availability.*	*Fig. 8.1-2.1*
Backup source	*Utilized to supply essential loads during diesel generator testing.*	*PSAR did not consider particulars of diesel generator testing.*	*8.3.1.1.7.1.7*
Diesel generator starting	*Deleted automatic starting due to startup or backup transformer undervoltage.*	*Class 1E bus undervoltage is the only undervoltage condition requiring diesel generator start*	*8.3.1.1.7.1.7* *8.3.1.1.7.2.7*
Diesel generator trips during emergency operation	*Added incomplete sequence trip to Division 1 and 2 diesel generators.*	*Incomplete sequence indicates a diesel generator malfunction having an imminent possibility of unit damage.*	*8.3.1.1.7.1.8*
125-V, 250-V-dc battery capability	*Revised supply capability from 4 hr to 2 hr.*	*Increased dc load*	*8.3.2*
125-V, 250-V-dc charger capability	*Revised recharge capability from 8 hr to 24 hr.*	*Increased dc load*	*8.3.2*

Table 1.3-8

Significant Design Changes from PSAR to FSAR (Continued)

Item	*Change*	*Reason for Change*	*FSAR Portion in Which Change is Discussed*
Spare 125-V-dc charger	*Spare charger serves as a backup for Divisions 1 and 2 only.*	*Spare charger is too large to provide backup to Division 3.*	*8.3.2*
Communication systems	*The commercial telephone exchange system is not redundant.*	*Redundancy not required.*	*8.2.1.5*
Fuel pool cooling and cleanup system	*Upgraded cooling portion of system to Seismic Category I to provide long-term cooling and safety grade makeup water capability for coolant of spent fuel following refueling.*	*To prevent fuel pool boiling and resultant adverse environmental conditions which could affect safety-related electrical equipment in the reactor building.*	*9.1.3*

[a] *PRT and REVAB were proposed at the CP stage as non-safety-related power generation type systems to reduce the thermal-hydraulic effects of transient events in the core. However, during experiments in the MK-11 suppression pool dynamics test program, it was decided that less frequent relief valve cycling during plant operation was desirable. Consequently, the recirculation pump trip (RPT) system was developed to perform functions previously assigned to PRT and REVAB.*

1.4 IDENTIFICATION OF AGENTS AND CONTRACTORS

The italicized information is historical and was provided to support the application for an operating license.

1.4.1 APPLICANT/OPERATOR

Energy Northwest is a municipal corporation and a joint operating agency of the State of Washington, organized in January 1957, pursuant to Chapter 43.52 of the Revised Code of Washington, as amended. Energy Northwest assumes the responsibility for safe operation and maintenance of the plant and for providing related services as described in Chapter 13.

1.4.2 ENGINEER AND CONSTRUCTION MANAGEMENT - BURNS & ROE, INC.

Burns and Roe, Inc. (B&R) provides engineering and initial construction management and quality assurance services for the design and construction of the plant, integrating the major plant items furnished by the General Electric Company (GE) and Westinghouse Electric Corporation.

Burns & Roe was founded in 1932 and incorporated in 1935 as Burns and Roe, Inc. Burns & Roe has been active in the fields of power generation and distribution, sea water and brackish water desalination, waste water renovation, and engineering, design, and/or construction management services for over 50 thermal power generating units representing more than 11,400,000 kW of new generating capacity, of which more than 4,800,000 kW is nuclear. Burns & Roe, Inc., has been continuously engaged in construction of engineering activities since 1935.

1.4.3 NUCLEAR STEAM SYSTEM SUPPLIER - GENERAL ELECTRIC COMPANY

General Electric designed, fabricated, and delivered the direct-cycle boiling water nuclear steam supply system (NSSS) for Columbia Generating Station (CGS). General Electric also fabricated the first core of nuclear fuel and provided technical direction of installation and startup of this equipment.

General Electric has engaged in the development, design, construction, and operation of boiling water reactors (BWRs) since 1955. Table 1.4-1 lists GE reactors completed, under construction, or ordered (several later canceled). Thus, GE has substantial experience, knowledge, and capability to design, manufacture, and furnish technical assistance for the installation and startup of reactors.

General Electric continues to provide technical support for the operation of CGS as requested by Energy Northwest. This includes providing support for the CGS Megawatt Improvement Program (see Section 1.1).

1.4.4 TURBINE GENERATOR SUPPLIER - WESTINGHOUSE ELECTRIC CORP.

Westinghouse Electric Corporation designed, fabricated, delivered, and installed the turbine generator for CGS. They also provided technical assistance for the startup of this equipment.

Westinghouse Electric Corporation has a long history in the application of turbine generators in nuclear power stations going back to the inception of commercial electrical power production using nuclear facilities. Westinghouse furnished the turbine generator unit for Shippingport No. 1. This unit was shipped in 1956. Westinghouse also furnished the turbine generator unit for Yankee Atomic Power Company Rowe No. 1. This unit was shipped in 1959. San Onofre No. 1 and Connecticut Yankee, Haddam Neck No. 1 unit went into commercial operation in 1968. Westinghouse nuclear turbine generators produced over 300 billion kW hr of electricity through May 1976, when 25 nuclear turbine generators totaling over 16,500 MW were in service. By 1984, 75 Westinghouse nuclear turbine generators should be in service producing over 61,319 MW. Inlet steam pressures of these units vary between 750 psig and 1000 psig and electrical outputs vary from 500,000 kW to 1,090,000 kW.

Westinghouse continues to provide technical and maintenance support for the turbine generator on an as-requested basis. They also provided replacement for the three low-pressure turbine rotors installed in the Spring 1992 refueling outage.

1.4.5 SYSTEM COMPLETION CONTRACTOR - BECHTEL

As System Completion Contractor, Bechtel provides field and home office services in project planning and control, engineering, construction completion, startup support, and quality verification for CGS. The Bechtel organization was founded in 1898, in the midwest, by Warren A. Bechtel. In 1940, Bechtel went international, working on a pipeline system in Venezuela; and then vastly diversified its activities during World War II, becoming involved in naval bases, shipyards, pipelines, refineries, and aircraft modification. Next, Bechtel pioneered in the nuclear power field, constructing the first reactor to produce useful electricity in 1949, and building Dresden I, the first commercial nuclear power station. Today, Bechtel is recognized as one of the world's leading engineering and construction firms.

1.4.6 MAJOR CONTRACTORS

1.4.6.1 <u>Fischbach/Lord</u>

Fischbach/Lord is responsible for the major electrical installation at CGS, consisting of raceways, conduit, cable, terminators, and electrical equipment. They were formed as a joint venture, solely for this project, in 1974.

1.4.6.2 Pittsburgh-Des Moines Steel Company

Pittsburgh-Des Moines Steel Company is responsible for engineering, fabrication, and installation of materials in the Primary Containment Vessel.

1.4.6.3 Wright-Schuchart- Harbor/Boecon (Boeing Construction)/General Energy Resources, Inc.

Wright-Schuchart-Harbor/Boecon/General Energy Resources, Inc. (WBG) was formed as a joint venture October 1, 1977, to be responsible for installation of major mechanical equipment, power, and process piping for CGS.

1.4.6.4 Bechtel

During plant construction, Bechtel served as the Construction Manager. During the operating phase Bechtel, as the Site Support Services contractor, is providing field engineering and installation support for plant modifications. Also, as Technical Services contractor, they are providing engineering support under Energy Northwest direction and under the Energy Northwest quality assurance program as requested by Energy Northwest. Under these contracts Bechtel is providing support to the Megawatt Improvement Program (see Section 1.1).

1.4.6.5 Deleted

1.4.6.6 Westinghouse Electric

Westinghouse provided the turbine generator. They provided replacement of the three low-pressure rotors which were installed in 1992. Westinghouse also provided a new plant simulator which was installed in 1995.

1.4.7 CONSULTING ENGINEER - R. W. BECK AND ASSOCIATES

The independent consulting firm of R. W. Beck and Associates is the consulting engineer for Energy Northwest's Columbia Generating Station. This firm was also a consulting engineer for WNP-1. Having extensive experience in preparing engineering feasibility and financing studies and reports necessary for the success of utility and civic improvement projects, the firm is well qualified for employment as a consulting engineer and was chosen as a result of its experience.

The duties of the consulting engineer are briefly summarized as follows: prepare estimates of plant capability, energy potential, usability within area loads and resources, the cost of power and energy output of the project, and generally determine the feasibility of the project. These duties will include assisting in preparation of a Bond Resolution, preparation of an engineering report, schedules for investment of funds, schedules for debt service payments, and other engineering services necessary to facilitate the financing of the project.

Table 1.4-1

Commercial Nuclear Reactors Completed, Under Construction, or in Design by General Electric

Station	*Utility*	*Rating (MWe)*	*Year of Order*	*Year of Startup*
Dresden 1 [a]	*Commonwealth Edison*	*207*	*1955*	*1960*
Humboldt Bay [a]	*Pacific G&E*	*63*	*1958*	*1963*
Kah1 [a]	*Germany*	*15*	*1958*	*1961*
Garigliano [a]	*Italy*	*150*	*1959*	*1964*
Big Rock Point	*Consumers Power*	*71*	*1959*	*1965*
JPDR	*Japan*	*11*	*1960*	*1963*
KRB [a]	*Germany*	*237*	*1962*	*1967*
Tarapur 1	*India*	*190*	*1962*	*1969*
Tarapur 2	*India*	*190*	*1962*	*1969*
GKN	*Holland*	*52*	*1963*	*1968*
Oyster Creek	*JCP&L*	*620*	*1963*	*1969*
Nine Mile Point 1	*Niagara Mohawk*	*610*	*1963*	*1969*
Dresden 2	*Commonwealth Edison*	*794*	*1965*	*1970*
Pilgrim 1	*Boston Edison*	*655*	*1965*	*1972*
Millstone 1	*NUSCo*	*660*	*1965*	*1970*
Tsuruga	*Japan*	*340*	*1965*	*1970*
Nuclenor	*Spain*	*440*	*1965*	*1971*
Fukushima 1	*Japan*	*439*	*1966*	*1971*
BKW KKM	*Switzerland*	*306*	*1966*	*1972*
Dresden 3	*Commonwealth Edison*	*794*	*1966*	*1971*
Monticello	*Northern States*	*536*	*1966*	*1971*
Quad Cities 1	*Commonwealth Edison*	*789*	*1966*	*1972*
Browns Ferry 1	*TVA*	*1065*	*1966*	*1974*
Browns Ferry 2	*TVA*	*1065*	*1966*	*1975*
Quad Cities 2	*Commonwealth Edison*	*789*	*1966*	*1972*
Vermont Yankee	*Vermont Yankee*	*514*	*1966*	*1972*
Peach Bottom 2	*Philadelphia Electric*	*1065*	*1966*	*1974*
Peach Bottom 3	*Philadelphia Electric*	*1065*	*1966*	*1974*
James A. FitzPatrick	*New York Power Authority*	*821*	*1966*	*1975*
Bailly [b]	*NIPSCo*	*660*	*1966*	----
Shoreham [b]	*LILCo*	*819*	*1967*	*1985*
Cooper	*Nebraska PPD*	*778*	*1967*	*1974*
Brown Ferry 3	*TVA*	*1065*	*1967*	*1977*
Limerick 1	*Philadelphia Electric*	*1055*	*1969*	*1985*
Hatch 1	*Georgia*	*786*	*1967*	*1975*
Fukashima 2	*Japan*	*762*	*1967*	*1974*
Brunswick 1	*Carolina P&L*	*790*	*1968*	*1977*
Brunswick 2	*Carolina P&L*	*790*	*1968*	*1975*
Arnold	*Iowa ELP*	*545*	*1968*	*1975*
Fermi 2	*Detroit Edison*	*1056*	*1968*	*1984*
Limerick 2	*Philadelphia Electric*	*1055*	*1969*	----

Table 1.4-1

Commercial Nuclear Reactors Completed, Under Construction, or in Design by General Electric (Continued)

Station	*Utility*	*Rating (MWe)*	*Year of Order*	*Year of Startup*
Hope Creek 1	*PSE&G*	*1067*	*1969*	*1986*
Hope Creek 2[b]	*PSE&G*	*1067*	*1969*	----
Zimmer[b]	*CCDPP*	*810*	*1969*	----
Chinshan	*Taiwan*	*610*	*1969*	*1977*
Caorso 1	*Italy*	*827*	*1969*	*1975*
Hatch 2	*Georgia*	*795*	*1970*	*1979*
LaSalle County 1	*Commonwealth Edison*	*1078*	*1970*	*1983*
LaSalle County 2	*Commonwealth Edison*	*1078*	*1970*	*1984*
Susquehanna 1	*Pennsylvania P&L*	*1050*	*1968*	*1983*
Susquehanna 2	*Pennsylvania P&L*	*1050*	*1968*	*1984*
Chinshan 2	*Taiwan*	*610*	*1970*	*1978*
Columbia Generating Station	*Energy Northwest*	*1103*	*1971*	*1984*
Nine Mile Point 2	*Niagara Mohawk*	*1090*	*1971*	*1986*
Grand Gulf 1	*Midsouth*	*1250*	*1972*	*1985*
Kaiseraugst[b]	*Switzerland*	*915*	*1971*	----
Fukushima	*Japan*	*1135*	*1971*	*1976*
Takai 2	*Japan*	*1135*	*1971*	*1976*
River Bend 1	*Gulf States*	*940*	*1971*	*1985*
River Bend 2[b]	*Gulf States*	*940*	*1971*	----
Perry 1	*Cleveland Electric*	*1205*	*1971*	*1985*
Perry 2[b]	*Cleveland Electric*	*1205*	*1971*	----
Hartsville A-1[b]	*TVA*	*1233*	*1972*	----
Hartsville B-1[b]	*TVA*	*1233*	*1972*	----
Hartsville A-2[b]	*TVA*	*1233*	*1972*	----
Hartsville B-2[b]	*TVA*	*1233*	*1972*	----
Laguna Verde 1	*Mexico*	*660*	*1972*	*1977*
Leibstadt	*Switzerland*	*940*	*1972*	*1978*
Kuosheng 1	*Taiwan*	*992*	*1972*	*1978*
Kuosheng 2	*Taiwan*	*992*	*1972*	*1979*
Clinton 1	*Illinois Power*	*950*	*1973*	*1986*
Clinton 2[b]	*Illinois Power*	*950*	*1973*	----
Montague 1[b]	*NUSCO*	*1150*	*1973*	----
Allens Creek 1[b]	*Houston L&P*	*1200*	*1973*	----
Skagit 1[b]	*Puget SD*	*1288*	*1973*	----
Skagit 2[b]	*Puget SD*	*1288*	*1973*	----
Barton 3[b]	*Alabama*	*1220*	*1973*	----
Blackfox 1[b]	*Oklahoma*	*1150*	*1973*	----
Blackfox 2[b]	*Oklahoma*	*1150*	*1973*	----
Cofrentes	*Spain*	*975*	*1973*	*1977*
Laguna Verde 2	*Mexico*	*660*	*1973*	*1978*
Enel 6[b]	*Italy*	*982*	*1974*	----
Enel 8[b]	*Italy*	*982*	*1974*	----

[a] *Retired*
[b] *Discontinued*

1.5 REQUIREMENTS FOR FURTHER TECHNICAL INFORMATION

The italicized information is historical and was provided to support the application for an operating license.

1.5.1 GENERIC ISSUES

NUREG-0933, "A Prioritization of Generic Safety Issues" presents the generic issues as follows:

a. TMI action plan items

In NUREG-0933, these follow the content and format of NUREG-0660 and NUREG-0737.

b. Task action plans

These include both the unresolved safety issues (USIs) previously included in NUREG-0606 and the Category A Generic Activities previously included in NUREG-0371 and the Category B, C and D Generic Activities previously included in NUREG-0471.

c. Human factors

These are the human factors considerations of NUREG-0660 and NUREG-0737.

d. Chernobyl Issues

This part addresses the recommendations of NUREG-1251.

In the sections below, these issues are addressed as unresolved safety issues (USIs), generic safety issues (GSIs), and TMI Task Action Plans. Human Factors considerations are included as part of the TMI Task Action Plans. Chernobyl is not addressed below or on the CGS docket as NUREG-1251 lead to the conclusion that no immediate changes in NRC regulations regarding the design or operation of U.S. commercial reactors were required. However, NUREG-1251 and INPO SER 34-86, "Chernobyl Unit 4 Accident," and INPO SOER 87-1, "Core Damaging Accident Following an Improperly Conducted Test," were reviewed by Energy Northwest to identify the need for any changes to hardware, procedures, or training at CGS.

1.5.1.1 Unresolved Safety Issues

1.5.1.1.1 Unresolved Safety Issues Introduction

Unresolved safety issues are issues identified by the NRC that affect a number of plants, question the adequacy of existing requirements, have no current resolution and are judged to be unacceptable if left unresolved for the life of the plant.

A December 20, 1977, amendment to the Energy Reorganization Act required that the NRC develop a plan providing for specification and analysis of USIs and take action as necessary to implement corrective measures with respect to such issues. In a joint Explanatory Statement of the House - Senate Conference Committee for the FY 1978 Appropriations Bill this was explained to mean that a plan was to be developed to resolve the USIs. In September 1989, the NRC achieved resolutions of all of the identified USIs.

On October 19, 1989, the NRC issued Generic Letter 89-21, "Request for Information Concerning Status of Implementation of Unresolved Safety Issue (USI) Requirements." This generic letter requested that licensees and construction permit holders review and report on the status of the implementation of USIs for which final technical resolution had been achieved.

Energy Northwest responded to this request in Reference 1.5-1. The NRC responded to this submittal by Reference 1.5-2 and identified anticipated transient without scram (ATWS), Station Blackout and Safety Implications of Control Systems (A-9, A-44, and A-47, respectively) as not being implemented. (Subsequently, these have been resolved as discussed below.)

1.5.1.1.2 Implementation of Specific Unresolved Safety Issues

A-8 Mark II Containment Pool Dynamic Loads

Resolution of A-8 for CGS is documented in NUREG-0892 (the SER for CGS) and Supplements 4 and 5 in Sections 6.2.1.8 and 3.9.3.1, respectively.

A-9 Anticipated Transients Without Scram

In the safety evaluation transmitted with Reference 1.5-7, the NRC stated that the standby liquid control (SLC) flow and sodium pentaborate decahydrate concentration for CGS were in compliance with the ATWS rule.

The design requirements for resolution of ATWS for CGS were to install an alternate rod injection (ARI) system (see Section 7.4.1.6), a standby liquid control (SLC) system (see Sections 7.4.1.2 and 9.3.5), and to trip the reactor recirculation pumps automatically by a recirculation pump trip (RPT) system under conditions indicative of an ATWS (Section

7.4.1.5). In addition, ATWS equipment needed to be qualified for the environmental conditions associated with anticipated operational occurrences and to ATWS conditions up to the time the required function is completed (Reference 1.5-10). The FSAR Section 15.8 ATWS analysis also needed to be revised.

In Reference 1.5-3, the NRC stated that the CGS alternate rod injection system was in compliance with the ATWS rule. The reference also stated that the RPT system required two modifications to be in compliance with the rule. Reference 1.5-4 documents the implementation of the changes required to resolve these two issues.

In Reference 1.5-5, Energy Northwest informed the NRC that confirmation of the environmental qualifications of ATWS equipment remained to be confirmed. Reference 1.5-6 documented that the confirmation had been completed.

In FSAR Amendment 42, Section 15.8 was revised to include new ATWS analyses. Technical Specification Amendment 93 was issued on August 9, 1991 which addressed modifications to the ATWS-RPT system. With this amendment, all activities required for ATWS resolution for CGS were completed.

A-10 BWR Feedwater Nozzle Cracking

NRC review of CGS relative to A-10 and NUREG-0619, which Generic Letter 89-21 states resolves this USI, is documented in NUREG-0892, Sections 3.9.3.1, 5.2.3.1, and 5.2.4. While these sections address A-10, they do not specifically state that the total issue is resolved for CGS. However, as no concerns were raised in the subsequent five supplements to NUREG-0892 and as Energy Northwest was not aware of a concern of the NRC's regarding A-10 subsequent to the issuance of the operating license, in Reference 1.5-1 Energy Northwest stated that it believed A-10 to be resolved for CGS. This position was apparently accepted by the NRC by the issuance of Reference 1.5-2.

A-11 Reactor Vessel Material Toughness

NRC acceptance of the CGS commitment to 10 CFR 50, Appendix G, is discussed in NUREG-0892, Section 5.3.2. In NUREG-0744 and Generic Letter 82-26 issued subsequent to the publication of the original issue of NUREG-0892, a response by licensees was not required; they only provided guidance to licensees who may have been required to submit a fracture analysis to justify continued operation. This was not the case for CGS.

A-17 Systems Interactions

Generic Letter 89-18 issued September 6, 1989 transmitted NRC final resolution of this USI. No formal reply was required. Energy Northwest incorporated information contained and referenced in this Generic Letter into the CGS IPE program, the results of which were

submitted to the NRC by Reference 1.5-22. However, as no formal action to Generic Letter 89-18 was required, Energy Northwest considered this USI closed for CGS prior to the completion of the IPE. This was so stated in Reference 1.5-1.

A-24 Qualification of Class 1E Safety Related Equipment

In NUREG-0892 Supplement 4, Section 3.11.5, the NRC states that CGS has demonstrated conformance to NUREG-0588. Generic Letter 89-21 states that Revision 1 to NUREG-0588 resolved A-24. By NRC memorandum, J. Knight to T. Novak, dated November 1983 (8312120370), Mr. Knight states that the CGS review was to Revision 1 of the NUREG.

A-31 Residual Heat Removal Shutdown Requirements

NUREG-0892 states in Section 5.4.2.1 that the CGS RHR system conforms to the Commission's regulations and applicable Regulatory Guides. Generic Letter 89-21 states that A-31 was resolved in May 1978 by publication of SRP 5.4.7. As NUREG-0892 was written in May 1982, Energy Northwest stated in Reference 1.5-1 that this established closure of A-31 for CGS.

A-36 Control of Heavy Loads

NUREG-0892 Supplement 4, Section 9.1.5, states that the guidelines of NUREG-0612 have been satisfied for CGS. Generic Letter 89-21 states that NUREG-0612 resolves A-36.

A-39 Determination of Safety Relief Valve Pool Dynamic Load and Temperature Limits

Section 6.2.1.8 of NUREG-0892 Supplements 1 and 4, provides NRC acceptance of the resolution of this issue for CGS.

A-40 Seismic Design Criteria

NUREG-1233 issued September 1989 states that the proposed changes that constitute the resolution of USI-40 are to apply to new applicants only. CGS is not one of the plants identified in Generic Letter 89-21 that needed to be reviewed to the new criteria.

A-42 Pipe Cracks in Boiling Water Reactors

NUREG-0892 states in Section 5.2.3.1 that CGS conforms to the requirements of NUREG-0313, Revision 1, which Generic Letter 89-21 states resolves A-42. NUREG-0892 Supplement 5, Section 5.2.3.2, provides additional information on this issue. Also see Section 5.2.3.2.3. Additional consideration for BWR pipe cracks beyond the scope of A-42 were raised by the NRC in Generic Letter 88-01. The resolution of Generic Letter 88-01 for CGS

is provided in References 1.5-21, 1.5-35, and 1.5-36, and in the Bases for CGS Technical Specifications.

A-43 Containment Emergency Sump Performance

Generic Letter 89-21 states that resolution of A-43 only applies to new plants (i.e., those reviewed after October 1985) and, as such, does not apply to CGS.

A-44 Station Blackout

See Appendix 8A.

A-45 Shutdown Decay Heat Removal

According to guidance provided in Generic Letter 89-21 and Supplement 9 to NUREG-0933, Energy Northwest incorporated closure of A-45 into the CGS IPE program the results of which were submitted to the NRC by Reference 1.5-22.

A-46 Seismic Qualification of Equipment in Operating Plants

Generic Letter 87-03 issued February 27, 1987 which addresses A-46 resolution for CGS did not require any action or plant review. NUREG-1211, Enclosure 1, established Generic Letter 87-03 as applicable to CGS rather than Generic Letter 87-02. As such, Energy Northwest considers this USI closed for CGS. Also, NUREG-0892, Supplement 5 in Appendix C states that A-46 only applies to plants that were operating at the time.

A-47 Safety Implication of Control System

Generic Letter 89-19 provides requirements to close A-47. The overfill protection system required of BWRs is provided for in CGS. Closure of this issue was provided by Reference 1.5-9.

A-48 Hydrogen Control Measures and Effects of Hydrogen Burn on Safety Equipment

As stated in Generic Letter 89-21, A-48 is closed and implemented for Mark II BWRs such as CGS.

1.5.1.1.3 Unresolved Safety Issues Implementation Summary

The resolution of all USIs for CGS has been achieved with the NRC. Regarding Station Blackout (A-44), 10 CFR 50.63(c)(4) provides for a 2 year implementation schedule for closure of identified modifications.

1.5.1.2 Generic Safety Issues

1.5.1.2.1 Generic Safety Issues Introduction

In Generic Letter 90-04, Reference 1.5-12, the NRC requested that licensees and construction permit holders address a list of specific generic safety issues (GSIs) listed in the generic letter. Energy Northwest's response to this request for CGS was provided in Reference 1.5-13.

1.5.1.2.2 Implementation of Specific Generic Safety Issues

The following summarizes the CGS implementation of applicable GSIs listed in Generic Letter 90-04 and other GSIs that have been resolved for CGS subsequent to the issuance of the Generic Letter. The following is a summary of information provided in Reference 1.5-13 with updated information provided as appropriate.

GSI/Subject	*Status*
40/BWR Scram System Pipe Breaks	*Closed as documented in NUREG-0892 (p. 4-4) and documents listed in Reference 1.5-13*
41/BWR Scram Discharge Volume	*Closed as documented in NUREG-0892 (p. 7-6)*
43/Reliability of Air Systems	*Closed as discussed in References 1.5-13 and 1.5-15*
48/LCOs for Class 1E vital Instrumentation Buses - Generic Letter 91-11 (added subsequent to Generic Letter 90-04 response)	*Closed as documented in Reference 1.5-19*
49/Interlocks and LCOs for Class 1E Tie Breakers - Generic Letter 91-11 (added subsequent to Generic Letter 90-04 response).	*Closed as documented in Reference 1.5-19*
51/Improved Reliability of Open-Cycle Service Water Systems	*Closed subsequent to Generic Letter 90-04 as addressed by References 1.5-11, 1.5-37, and 1.5-38*

67/Improved Accident Safety Report Monitoring	*Closed as summarized in NRC Evaluation for CGS Regulatory Guide 1.97 implementation (Reference 1.5-14)*
75/Salem ATWS Events	*Closed subsequent to the Generic Letter 90-04 response by letters listed in Reference 1.5-13, Reference 1.5-17, and issuance of Technical Specification Amendment 90. Generic Letter 83-28, Supplement 1, issued October 7, 1992, did not change this status as CGS does not use reactor trip breakers.*
79/RPV Thermal Stress During Natural Convection Cooldown	*Closed subsequent to Generic Letter 90-04 by Generic Letter 92-02 as not impacting BWRs*
86/Long Range Plan for Stress Corrosion Cracking in BWR Piping	*Closed based upon documents listed in Reference 1.5-13.*
A-13/Snubber Operability Assurance	*NUREG-0933 states that this issue was resolved in 1980 by revision to the Standard Technical Specifications (STS). As the original CGS Technical Specifications were based upon Revision 3 to the BWR STS issued in 1980, this concern is resolved for CGS. In particular, for the five issues mentioned for GSI A-13 resolution in Generic Letter 90-04:* *1. The arbitrary capacity limit of 50,000 lbs that previously existed in Technical Specifications does not appear in the CGS Technical Specifications.* *2. The requirement for NRC approval of seal material does not appear in the CGS Technical Specifications.* *3, 4. Monitoring and IST programs to ensure snubber reliability do exist in the CGS Licensee Controlled Specifications. They are significantly expanded from that included in earlier programs.*

	5. The CGS Licensee Controlled Specifications allow for an in-place snubber IST program. *Thus, the five requirements of A-13 resolution as discussed in Generic Letter 90-04 have been implemented for CGS*
A/30 Adequacy of Safety Related DC Power Supplies - Generic Letter 91-06 (added subsequent to Generic Letter 90-04 response)	*Closed as documented in Reference 1.5-18*
A-35/Adequacy of Offsite Power Systems	*Closed as documented in NUREG-0892 (p. 8-16) and discussed in Reference 1.5-13)*
B-63/Installation of Low Pressure Systems Connected to the RCPB	*Closed as discussed in Question 040.079 (FSAR Volume 22) and Reference 1.5-13*

1.5.1.2.3 Generic Safety Issues Implementation Summary

Implementation of the applicable GSIs of Generic Letter 90-04 is complete.

1.5.1.3 TMI Task Action Plans

The CGS responses to the TMI-2 action plans as they were included in NUREG-0737 are provided in Appendix B. This Appendix agrees with Reference 1.5-16 in documenting that all TMI Task Action Plans have been implemented for CGS.

1.5.2 REFERENCES

1.5-1 Letter, GO2-89-215, G. C. Sorensen to NRC, "Response to Generic Letter 89-21 Requesting Plant Status on Implementation of Unresolved Safety Issues," dated November 30, 1989.

1.5-2 Letter, R. B. Samsworth (NRC) to G. C. Sorensen (SS), "Unimplemented Unresolved Safety Issues at WNP-2 (TAC No. 74538)," dated March 20, 1990.

1.5-3 Letter, R. B. Samworth (NRC) to G. C. Sorensen (SS), "ATWS Rule 10 CFR 50.62 relating to ARI and RPT Systems," dated November 6, 1988.

1.5-4 Letter, GO2-90-110, G. C. Sorensen to NRC, "Anticipated Transients Without Scram (ATWS) Design Modifications," dated June 22, 1990.

1.5-5 *Letter, GO2-89-110, G. C. Sorensen (SS) to NRC, "Anticipated Transients Without Scram Implementation Schedule," dated June 16, 1989.*

1.5-6 *Letter, GO2-90-116, G. C. Sorensen (SS) to NRC, "Resolution of ATWS for WNP-2," dated June 29, 1990.*

1.5-7 *Letter, R. B. Samworth (NRC) to G. C. Sorensen (SS), "Issuance of Amendment No. 43," dated May 29, 1987.*

1.5-8 *Letter, GO2-89-062, G. C. Sorensen (SS) to NRC, "Response to Station Blackout Rule using HPCS Diversion III as Alternate AC Power," dated April 17, 1989.*

1.5-9 *PL Eng (NRC) to G. C. Sorensen (SS), Response to "Request for Action Related to Resolution of Unresolved Safety Issue A-47 - Safety Implications of Control System in LWR Nuclear Power Plants, pursuant to 10 CFR 50.54(f) - Generic Letter 89-19 (TAC NO. 75019)," dated November 13, 1991.*

1.5-10 *BWROG Topical Report NEDE-31096-P, "Anticipated Transients Without Scram; Response to NRC ATWS Rule 10 CFR 50.62," dated December 1985.*

1.5-11 *Letter, PL Eng (NRC) to G. C. Sorensen (SS), Evaluation of Response to NRC Generic Letter 89-13, "Service Water System Problems Affecting Safety-Related Equipment (TAC No. 74086)," dated April 26, 1992.*

1.5-12 *Generic Letter 90-04, "Request for Information on the Status of Licensee Implementation of Generic Safety Issues Resolved With Imposition of Requirements or Corrective Actions," dated April 25, 1990.*

1.5-13 *Letter, GO2-90-113, G. C. Sorensen to NRC, "Response to Generic Letter 90-04 Regarding Status of Implementation of Generic Safety Issues, (TAC No. 75993)," dated June 28, 1990.*

1.5-14 *Letter, G. W. Knighton (NRC) to G. C. Sorensen (SS), "Emergency Response Capability - Conformance to Regulatory Guide 1.97, Revision 2, (TAC No. 59516)," dated March 23, 1988.*

1.5-15 *Letter, GO2-89-128, G. C. Sorensen to NRC, "Final Response to Generic Letter 88-14, 'Instrument Air Supply Problems Affecting Safety-Related Equipment," dated July 28, 1989.*

1.5-16 NUREG-1435 Supplement 2, "Status of Safety Issues at Licensed Power Plants," dated December 1992.

1.5-17 Letter, P. L. Eng (NRC) to G. C. Sorensen (SS), "Response to Generic Letter 90-03 for Washington Nuclear Plant 2 (TAC No. 76314)," dated November 8, 1990.

1.5-18 Letter, W. M. Dean (NRC) to G. C. Sorensen (SS), "Response to Generic Letter 91-06, MPA L106, Resolution of Generic Issue A-30, Adequacy of Safety Related DC Power Supplies, Pursuant to 10 CFR 50.54(f) for Washington Public Power Supply System Unit 2 (TAC NO. M81515)," dated March 27, 1992.

1.5-19 Letter, P. L. Eng (NRC) to G. C. Sorensen (SS), "Response to Generic Letter 91-11, 'Resolution of Generic Issues 48-LCOs for Class 1E Vital Instruments Buses and 49 - Interlocks and LCOs for Class 1E Tie Breakers' pursuant to 10 CFR 50.54(f) for Washington Public Power Supply System Nuclear Plant No. 2 (TAC No. M82484)," dated March 2, 1992.

1.5-20 Letter, P. L. Eng (NRC) to G. C. Sorensen (SS), "Status of TMI Item I.D.1.2, 'Detailed Control Room Design Review (DCRDR) at Washington Public Power Supply System Nuclear Project No. 2 (WNP-2) (TAC No. 56181)," dated November 13, 1991.

1.5-21 Letter, P. L. Eng (NRC) to G. C. Sorensen (SS), "Response to GL 88-01, Intergranular Stress Corrosion in Piping (TAC No. 69161)," dated December 28, 1990.

1.5-22 Letter, GO2-92-206, G. C. Sorensen (SS), "Response to Generic Letter 88-20," Individual Plant Examinations for Severe Accident Vulnerabilities 10 CFR 50.54(f)," dated August 28, 1992.

1.5-23 through 1.5-34 Deleted

1.5-35 Letter, GO2-92-004, G. C. Sorensen to NRC, "Response to NRC SER on Generic Letter 88-01 (TAC No. 69161)," dated January 8, 1992.

1.5-36 Letter, GO2-92-086, G. C. Sorensen to NRC, "Additional Response to Generic Letter 88-01 Safety Evaluation Report (TAC Nos. M80358 and M69161)," dated April 10, 1992.

1.5-37 *Letter, GO2-90-017, G. C. Sorensen to NRC, "Response to Generic Letter 89-13, Service Water System Problem Affecting Safety-Related Equipment," dated February 5, 1990.*

1.5-38 *Letter, GO2-91-041, G. C. Sorensen to NRC, "Response to Generic Letter 89-13, Service Water System Problems Affecting Safety-Related Equipment," dated February 28, 1991.*

1.6 MATERIAL INCORPORATED BY REFERENCE

Table 1.6-1 is a list of General Electric topical reports and other reports and documents which are incorporated in whole or in part by reference. These documents were filed with the NRC.

Table 1.6-1

Topical Reports

Report	Title	FSAR Section
General Electric Company		
APED-4824	Maximum Two-Phase Vessel Blowdown from Pipes (April 1965)	6.2
APED-5458	Effectiveness of Core Standby Cooling Systems for General Electric Boiling Water Reactors (March 1968)	5.4
APED-5460	Design and Performance of General Electric BWR Jet Pumps (July 1968)	3.9
APED-5555	Impact Testing on Collet Assembly for Control Rod Drive Mechanism 7RDB144A (November 1967)	4.6
APED-5640	Xenon Considerations in Design of Large Boiling Water Reactors (June 1968)	4.1
APED-5652	Stability and Dynamic Performance of the General Electric Boiling Water Reactor (April 1969)	4.1
APED-5696	Tornado Protection for the Spent Fuel Storage Pool (November 1968)	3.3, 3.5, 9.1
APED-5706	Incore Neutron Monitoring System for General Electric Boiling Water Reactors (November 1968; revised April 1969)	7.6
APED-5750	Design and Performance of General Electric Boiling Water Reactor Main Steam Line Isolation Valves (March 1969)	3.9, 5.4
GEAP-5620	Failure Behavior in ASTM A106B Pipes Containing Axial Through-Wall Flaws (April 1968)	5.2

Table 1.6-1

Topical Reports (Continued)

Report	Title	FSAR Section
GEAP-10546	Theory Report for Creep-Plast Computer Program (January 1972)	4.1
GEAP-13197	Emergency Cooling in BWRs Under Simulated Loss-of-Coolant (BWR PLECMP) Final Report (June 1971)	6.2
GE-NE-778-028-0790	GE Duralife 215 Control Rod Safety Evaluation, Revision 2 (July 1992)	4.2
GE-NE-187-24-0992	Washington Public Power Supply System Nuclear Project 2, SRV Setpoint Tolerance and Out-of-Service Analysis, Revision 2 (July 1993)	6.3
NEDC-31984-P	Generic Evaluations of General Electric Boiling Water Reactor Power Uprate - (July 1991)	5.4, 15.8
NEDC-32115-P	Washington Public Power Supply System Nuclear Project 2, SAFER/GESTR-LOCA Loss-of-Coolant Accident Analysis (September 1992)	6.3
NEDC-32141-P	Power Uprate With Extended Load Line Limit Safety Analysis for WNP-2 (June 1993)	5.4, 15.8
NEDC-32232-P	WNP-2 Reactor Recirculation Adjustable Speed Drive (ASD) System Reliability Analysis (August 1993)	7.7
NEDC-32983-P-A	General Electric Methodology for Reactor Pressure Vessel Fast Neutron Flux Evaluations (January 2006)	4.3.2.8, 4.3.4
NEDC-33507-P	Energy Northwest Columbia Generating Station APRM/RBM/Technical Specifications/Maximum Extended Load Line Limit Analysis (ARTS/MELLLA), Revision 1 (January 2012)	15.4

Table 1.6-1

Topical Reports (Continued)

Report	Title	FSAR Section
NEDE-10169	Safe-System Analysis for Standby Core Cooling Equipment (September 1970)	3A
NEDE-10313-P	PDA - Pipe Dynamic Analysis Program for Pipe Rupture Movement	3.6
NEDE-11146-P	Design Basis for New Gas System (July 1971)	11.3
NEDE-13442-P-01	Mark II - Pressure Suppression Test Program (May 1976)	3A
NEDE-20944-P	BWR/4 and BWR/5 Fuel Design (October 1976)	Table 1.3-1
NEDE-21175-3-P	Fuel Assembly Evaluation of Combined Safe Shutdown Earthquake (SSE) and Loss-of-Coolant Accident (LOCA) Loadings (July 1982)	3.9
NEDE-21354-P	BWR Fuel Channel Mechanical Design and Deflection (September 1976)	3.9
NEDE-21471-P	Analytical Model for Estimating Drag Forces on Rigid Submerged Structures Caused by LOCA and Safety/Relief Valve Ramshead Air Discharges (September 1977)	3A
NEDE-21544-P	Mark II Pressure Suppression Containment System, an Analytical Model of the Pool Swell Phenomenon (December 1976)	3A, 6.2
NEDE-21821	BWR Feedwater Nozzle/Sparger Final Report (March 1978)	5.2, 5.3
NEDE-23604	Brunswick Unit 1 Reactor Internals Vibration and Temperature Measurements (June 1977)	5.3

Table 1.6-1

Topical Reports (Continued)

Report	Title	FSAR Section
NEDE-23749-P	Analytical Model for Computing Transient Pressure and Forces in the S/RVDL (February 1978)	3.9
NEDE-23806-P	MK II Main Vent Lateral Loads Summary Report (October 1978)	3A
NEDE-24010-P	Technical Bases for the Use of the SRSS Method for Combining Dynamic Loads for Mark II Plants (July 1977) with Supplement 1 (October 1978), Supplement 2 (December 1978), and Supplement 3 (August 1979)	3.9
NEDE-24011-P-A	General Electric Standard Application for Reactor Fuel (most recent approved version referenced in COLR)	1.8, 3.9, 4.1, 4.2, 4.3, 4.4, 15.1, 15.4
NEDE-24057-P	Assessment of Reactor Internals Vibration in BWR/4 and BWR/5 Plants (November 1977)	3.9
NEDE-24106-P	Dynamic Lateral Loads on a Main Vent Downcomer - Mark II Containment (March 1978)	3A
NEDE-24222	Assessment of Boiling Water Reactor Mitigation of Anticipated Transient Without Scram, Volume II (December 1979)	15.8
NEDE-24285-P	Chugging Loads - Revised. Definition and Application Methodology for Mark II Containments (July 1981)	3A
NEDE-24288-P	Generic Condensation Oscillation Load Definition Report (November 1980)	3A
NEDE-24302-P	Generic Chugging Load Definition Report (April 1981)	3A

Table 1.6-1

Topical Reports (Continued)

Report	Title	FSAR Section
NEDE-24695	RVF0R04 User's Manual, S/RVDL Clearing Transient Pressures and Forces in the S/RDL (December 1979)	3.9
NEDE-24794-P	Dynamic Lateral Loads on Mark II Main Vent Downcomer - Correlation of Independent Reference Data (March 1980)	3A
NEDE-24811-P	4T Condensation Oscillation Test Program Final Test Report (May 1980)	3A
NEDE-24822-P	Mark II Improved Chugging Methodology (May 1980)	3A
NEDE-24834	Hanford 2 Crimped Control Rod Drive Line (June 1980)	3.6
NEDE-24988-P	Analysis of Generic BWR Safety/Relief Valve Operability Test Results (October 1981)	5.2, 5.4, Table F.4-1
NEDE-25100-P	CAORSO SRV Discharge Tests Phase I Test Report (May 1979)	3A
NEDE-25118	CAORSO SRV Discharge Tests Phase II ATR Report (August 1979)	3A
NEDE-31096-P	Licensing Topical Report, Anticipated Transient Without Scram (February 1987)	4.6, 7.4, 9.3
NEDM-10320	The General Electric Pressure Suppression Containment Analytical Model (March 1971)	3A, 6.2
NEDO-10029	An Analytical Study on Brittle Fracture of GE BWR Vessel Subject to the Design Basis Accident (July 1969)	1.8
NEDO-10320	The General Electric Pressure Suppression Containment Analytical Model (April 1971)	3A 6.2

Table 1.6-1

Topical Reports (Continued)

Report	Title	FSAR Section
NEDO-10329	Loss-of-Coolant Accident and Emergency Core Cooling Models for General Electric Boiling Water Reactors (April 1971); Supplement 1, (April 1971); Addenda, (May 1971)	6.2
NEDO-10349	Analysis of Anticipated Transients Without Scram (March 1971)	15.8
NEDO-10466-A	Power Generation Control Complex Design Criteria and Safety Evaluation (September 1977)	8.3, 9.5, F.2, F.3, F.7
NEDO-10527	Rod Drop Accident Analysis for Large Boiling Water Reactors (March 1972); Supplement 1, (July 1972); Supplement 2, (January 1973)	4.2, 15.4
NEDO-10602	Testing of Improved Jet Pump for the BWR/6 Nuclear System (June 1972)	3.9
NEDO-10734	A General Justification for Classification of Effluent Treatment System Equipment as Group D (February 1973)	11.3
NEDO-10751	Experimental and Operational Confirmation of Off-Gas System Design Parameters (January 1973) (Proprietary)	11.3
NEDO-10802	Analytical Methods of Plant Transient Evaluations for General Electric Boiling Water Reactor (February 1973)	15.2
NEDO-10899	Chloride Control in BWR Coolants (June 1973)	1.8, 5.2
NEDO-10905	HPCS Power Supply	1.8, 8.3

Table 1.6-1

Topical Reports (Continued)

Report	Title	FSAR Section
NEDO-10951	Releases from BWR Radwaste Management Systems (July 1973)	11.2
NEDO-10958-A	General Electric BWR Thermal Analysis Basis (GETAB): Data, Correlation, and Design Application (January 1977)	15.0
NEDO-20533	The General Electric Mark III Pressure Suppression Containment System Analytical Model (June 1974)	3A, 6.2
NEDO-20566-A	Analytical Model for Loss-of-Coolant Analysis in Accordance with 10 CFR 50, Appendix K (Proprietary) (September 1986)	3.9, 4.2, 6.3
NEDO-20626	Studies of BWR Designs for Mitigation of Anticipated Transients without Scrams (October 1974)	6.2, 9.3
NEDO-20761	Millstone Nuclear Power Station, Refueling/Maintenance Outage (Fall 1974)	12.2
NEDO-21061	Mark II Containment Dynamics Forcing Functions Information Report (September 1976, June 1978, November 1981)	3A, 6.2
NEDO-21142	Realistic Accident Analysis for General Electric Boiling Water Reactor - The RELAC Code and User's Guide (December 1977)	15.2, 15.6
NEDO-21231	Banked Position Withdrawal Sequence (September 1976)	15.4
NEDO-21471	Analytical Model for Estimating Drag Forces on Rigid Submerged Structures Caused by LOCA and Safety/Relief Valve Ramshead Air Discharges (September 1977)	3A

Table 1.6-1

Topical Reports (Continued)

Report	Title	FSAR Section
NEDO 21667	Comparison of the 1/13 Scale Mark II Containment Multivent Pool Swell Data with Analytical Methods (August 1977)	3A
NEDO-21708	Radiation Effects in Boiling Water Reactor Vessel Steels (October 1977)	5.3
NEDO-21778-A	Transient Pressure Rises Affecting Fracture Toughness Requirements for Boiling Water Reactors January 24, 1978 (January 17, 1979)	5.3
NEDO-21985	Functional Capability Criteria for Essential Mark II Piping (September 1978)	3.9
NEDO-23678-P	Mark II Pressure Suppression Test Program Phases I, II, and III of the 4T Tests (June 1978)	3A
NEDO-24057-P	Assessment of Reactor Internals Vibration in BWR/4 and BWR/5 Plants (November 1977)	3.9
NEDO-24154-A	Qualification of the One-Dimensional Core Transient Model for Boiling Water Reactors, Volumes 1 and 2 (August 1986)	5.2
NEDO-24210	PISYS Analysis of NRC Problem (August 1979)	3.9
NEDO-24226	General Electric Company, Control Blade Lifetime With Potential B_4C Loss, with Supplement 1 (December 1979)	4.2
NEDO-24288	Mark II Containment Program - Generic Condensation Oscillation Load Definition Report (February 1981)	3A
NEDO-24548	Technical Description Annulus Pressurization Load Adequacy Evaluation (January 1979)	6.2

Table 1.6-1

Topical Reports (Continued)

Report	Title	FSAR Section
NEDO-24708-A	Additional Information Required for NRC Staff Generic Report on Boiling Water Reactors (June 1980)	7.4, B, I, Table F.4-1
NEDC-24154-P-A	Qualification of the One-Dimensional Core Transient Model for Boiling Water Reactors, Volumes 1, 2, 3 and 4 (February 2000)	15.0, 15.1, 15.2, 15.3, 15.5
NEDC-32084P-A	TASC-03A A Computer Program for Transient Analysis of a Single Channel (July 2002)	6.3
NEDC-32601P-A	Methodology and Uncertainties for Safety Limit MCPR Evaluations (August 1999)	4.4
NEDC-32694P-A	Power Distribution Uncertainties for Safety Limit MCPR Evaluations (August 1999)	4.4
NEDE-32906P	Supplement 3-A Migration to TRACG04/PANAC11 from TRACG02/PANAC10 for TRACG AOO and ATWS Overpressure Transients (April 2010)	5.2
NEDC-32950P	Compilation of Improvements to GENE's SAFER ECCSLOCA Evaluation Model (July 2007)	6.3
NEDC-33270P	GNF2 Advantage Generic Compliance with NEDE-24011-P-A (GESTAR II) (most recent version referenced in COLR)	4.1, 4.2, 4.3, 4.4, 9.1, 15.4
NEDE-23785-1-PA	The GESTR-LOCA and SAFER Models for the Evaluation of the Loss-of-Coolant Accident. Volumes 1, 2, and 3 (October 1984)	6.3

Table 1.6-1

Topical Reports (Continued)

Report	Title	FSAR Section
NEDE-23785P-A	The GESTR-LOCA and SAFER Models for the Evaluation of the Loss-of-Coolant Accident. Volume 3 Supplement 1, Additional Information for Upper Bound PCT Calculation. (March 2002)	6.3
NEDE-24011-P-A-US	General Electric Standard Application for Reactor Fuel (GESTAR II) (Supplement for United States) (most recent approved version referenced in COLR)	3.9, 4.1, 4.2, 4.3, 4.4, 15.4
NEDE-30130-P-A	Steady State Nuclear Methods (April 1985)	15.1, 15.4

Table 1.6-1

Topical Reports (Continued)

Report	Title	FSAR Section
Other References		
WPPSS-74-2-R2 and Supplements WPPSS-74-2-R2A and WPPSS-74-2-R2B	Washington Public Power Supply System Sacrificial Shield Wall (March 1974) Sacrificial Shield Wall Design Supplemental Information (February 1975, August 1975)	3.8, 6.2
Report Submitted with letter GO2-80-172, August 8, 1980	Engineering Evaluation of the WNP-2 Sacrificial Shield Wall (March 1974)	3.8, 6.2
Report submitted with letter GO2-80-182, August 19, 1980	Engineering Evaluation of the WNP-2 Sacrificial Shield Wall, Supplement No. 1	3.8, 6.2
--	Plant Design Assessment Report for SRV and LOCA Loads	3A
WPPSS-74-2-R3	Burns & Roe, Inc., Protection Against Pipe Breaks Outside Containment (April 1974)	3.5
WPPSS-74-2-R5	Drywell to Wetwell Leakage Study (July 1974, February 1974) (GO2-74-17, dated May 9, 1974)	6.2, 3.8
Inservice Inspection Program Plan	Inservice Inspection Program Plan Interval - 4	5.2.4, 6.6
Preservice Inspection Program Plan	Preservice Inspection Program Plan	5.2.4, 6.6

Table 1.6-1

Topical Reports (Continued)

Report	Title	FSAR Section
CGS-FTS-0168	Columbia Generating Station Alternative Source Term (report consolidated from letters GO2-04-170 dated September 30, 2004, GO2-06-116 dated September 11, 2006, GO2-05-054 dated March 16, 2005, GO2-05-160 dated September 29, 2005, GO2-06-043 dated March 21, 2006, GO2-06-105 dated August 7, 2006 and GO2-06-108 dated August 24, 2006)	1.8, 15.4, 15.6, 15.7

1.7 ACRONYMS

The acronyms used in this FSAR follow

ACI	American Concrete Institute
ACRS	Advisory Committee on Reactor Safeguards
ADS	automatic depressurization system
AEC	Atomic Energy Commission
AISC	American Institute of Steel Construction
ALARA	as low as is reasonably achievable
ALI	annual limit on intake
AMP	Aging Management Programs
ANSI	American National Standards Institute
APRM	average power range monitor
ARM	area radiation monitor
ART	adjusted reference temperature
AS	auxiliary steam
ASCE	American Society of Civil Engineers
ASD	adjustable speed drive
ASME	American Society of Mechanical Engineers
ASTM	American Society for Testing and Materials
ATWS	anticipated transient without scram
AWS	American Welding Society
B&R	Burns and Roe, Inc.

BISI	bypass & inoperable status indication
BOC	beginning of cycle
BPA	Bonneville Power Administration
BPC	Bechtel Power Corporation
BWR	boiling water reactor
BWROG	Boiling Water Reactor Owners Group
BWRVIP	BWR Vessel and Internals Project
CAS	central alarm station, control air system
CASS	Cast Austenitic Stainless Steel
CEP	containment exhaust purge
CGS	Columbia Generating Station
CHF	critical heat flux
CIA	containment instrument air
CLB	current licensing basis
CMFA	common mode failure analysis
COLR	Core Operating Limits Report
COND	main condensate system
CPR	critical power ratio
CRA	primary containment cooling system
CRD	control rod drive
CRDA	control rod drop accident
CRDRL	control rod drive return line

CREF	control room emergency filtration
CRPI	control rod position indication
CSP	containment purge supply
CST	condensate storage and transfer, condensate storage tank
CUF	Cumulative Usage Factor
CW	circulating water
DAC	derived air concentrations
DAW	dry active radioactive waste
DB	design basis
DBA	design basis accident
DBE	design basis earthquake
DG	diesel generator
DEH	digital electrohydraulic
DLR	dosimeter of legal record
DOE	Department of Energy
DOP	dioctylphthalate
DSA	Diesel Starting Air
DZO	depleted zinc oxide
ECA	engineering change authorization
ECCS	emergency core cooling system
ECN	engineering change notice
EDR	equipment drain (radioactive) processing

EFCV	excess flow check valve
EFPY	Effective Full Power Years
EHC	electrohydraulic control
EMA	Equivalent Margin Analysis
EOC	end of cycle
EOF	emergency operations facility
EPA	electrical protection assembly
EPN	equipment piece number
EPRI	Electric Power Research Institute
EPZ	emergency planning zone
EQ	Environmental Qualification, Environmentally Qualified
ESF	engineered safety feature
EWD	electrical wiring diagram
FA	full arc (mode of TGV operation)
FAC	Flow Accelerated Corrosion
FANP	Framatome ANP
F-B/V	front to back/vertical
FCD	functional control diagram
FCV	flow control valve
FDDR	Field Deviation Disposition Request
FDR	floor drain (radioactive) processing system
FLECHT	full-length emergency cooling heat transfer

FMEA	failure modes effects analysis
FPC	fuel pool cooling and cleanup
FSAR	Final Safety Analysis Report
GE	General Electric Company
HAD	heat actuated device
HCA	horizontal control accelerometer
HCU	hydraulic control unit
HCV	Hardened Containment Vent
HELB	high energy line break
HEPA	high-efficiency particulate air/absolute
HID	high-intensity discharge (lighting--vapor lamp)
HPCS	high-pressure core spray
H&V	heating and ventilating
HVAC	heating, ventilating, and air conditioning
HX	heat exchanger
IASCC	Irradiation Assisted Stress Corrosion Cracking
IBA	intermediate break accident
IDC	incident detection circuitry
IDS	instrument data sheet
IED	instrument engineering diagram
IEEE	Institute of Electrical and Electronics Engineers
IGA	Intergranular Attack

IGSCC	intergranular stress corrosion cracking
IHSI	Induction Heat Stress Improvement
IRM	intermediate range monitor
ISA	Instrument Society of America
ISI	In-Service Inspection
ISP	Integrated Surveillance Program
LCO	Limiting Condition of Operation
LCS	leak control system
LDS	leak detection system
LHGR	linear heat generation rate
LLRT	local leak rate test
LOCA	loss-of-coolant accident
LPCI	low-pressure coolant injection
LPCS	low-pressure core spray
LPRM	local power range monitor
LPZ	low population zone
LRA	License Renewal Application
LSSS	limiting safety system setting
MAPLHGR	maximum average planar linear heat generation rate
MCC	motor control center
MCPR	minimum critical power ratio
MEL	Master Equipment List

MG	motor-generator
MLD	mean low water datum
MLHGR	maximum linear heat generation rate
MOV	motor-operated valve
MS	main steam
MSIV	main steam isolation valve
MSIV-LCS	main steam isolation valve leakage control system
msl	mean sea level
MSL	main steam line
MSLC	main steam isolation valve leakage control
MWR	mixed waste (radioactive)
MWt	Megawatt thermal
NB	nuclear boiler
NBR	nuclear boiler rated (power)
NDE	nondestructive examination
NDT	nil-ductility transition
NDTT	nil-ductility transition temperature
NEC	National Electrical Code
NED	Nuclear Energy Division (GE)
NFPA	National Fire Protection Association
NEPIA	Nuclear Energy Property Insurance Association
NMS	neutron monitoring system

NPDES	National Pollutant Discharge Elimination System
NPHS	net positive suction head
NRC	Nuclear Regulatory Commission
NSAS	non-safety affecting safety
NSOA	nuclear safety operational analysis
NSSS	nuclear steam supply system
NSSSS	nuclear steam supply shutoff system
OBE	operating basis earthquake
OQAPD	Operational Quality Assurance Program Description
ODCM	Offsite Dose Calculation Manual
OPRM	Oscillation Power Range Monitor
OSHA	Occupational Safety and Health Act
OT	operating transient
OS&Y	outside screw and yoke
OT	operating transient
PA	Public Address (System)
PABX	Private Automatic Branch Exchange
PATP	Power Ascension Test Program
PCIOMR	preconditioning cladding interim operating management recommendation
PCRVICS	primary containment and reactor vessel isolation control system
PCS	process computer system

PCT	peak cladding temperature
PDIS	plant display information system
PEC	Plant Engineering Center
PGCC	power generation control complex
P&ID	piping and instrumentation diagram
PMF	probable maximum flood
PPM	Plant Procedure Manual
PRM	power range monitor
PSAR	Preliminary Safety Analysis Report
PSF	Plant Support Facility
PVS	plant vent stack
RBM	rod block monitor
RCC	reactor building closed cooling water
RCIC	reactor core isolation cooling
RCPB	reactor coolant pressure boundary
REA	reactor building exhaust air
RFW	reactor feedwater
RHR	residual heat removal
RMC	reactor manual control
RMS	remote manual switches
ROA	reactor building outside air

RPIS	rod position information system
RPS	reactor protection system
RPT	recirculation pump trip
RPV	reactor pressure vessel
RRC	reactor recirculation system
RRS	required response spectra
RSO	reactor system outline
RT_{NDT}	Reference Temperature for Nil-Ductility Transition
RWCU	reactor water cleanup
RWM	rod worth minimizer
RWP	Radiation Work Permit
SA	service air
SACF	single active component failure
SAF	single active failure
SAR	Safety Analysis Report
SAS	Secondary Alarm Station
SBA	small break accident
SBO	station blackout
SCC	Stress Corrosion Cracking
SCF	single component failure
SCC/IGA	SCC/intergranular attack

SCC/IASCC	SCC/irradiation assisted stress corrosion cracking
SDC	shutdown cooling
SEF	single equipment failure
SER	Safety Evaluation Report
SF	single failure (NSOA)
SGT	standby gas treatment
SGTS	standby gas treatment system
SJAE	steam jet air ejector
SLC	standby liquid control
SLMCPR	minimum critical power ratio safety limit
SLO	single loop operation
SMS	Scheduled Maintenance System
SOE	single operator error
SPC	Siemens Power Corporation
SPV	solenoid pilot valve
SRM	source range monitor
SRO	Senior Reactor Operator
SRP	Standard Review Plan
SRV	safety/relief valve
SS	safe shutdown
SS	stainless steel

SSC	structures, systems, and components
SSE	safe shutdown earthquake
S-S/V	side-to-side/vertical
SSW	sacrificial shield wall
SW	standby service water
SWP	Site Wide Procedure
TCV	turbine control valve
TDAS	transient data acquisition system
TEDE	total effective dose equivalent
TG	turbine generator
TGV	turbine governor valve
TIP	traversing in-core probe
TLAA	Time Limited Aging Analysis
TLD	thermoluminescent dosimeter
TMU	tower makeup
TPM	thermal power monitor
TRS	test response spectra
TSC	Technical Support Center
TSPM	Test and Startup Program Manual
TSW	plant service water (turbine building service water)
TWG	Test Working Group
UBC	Uniform Building Code

UHS	ultimate heat sink
UPS	uninterruptable power supply
USE	Upper Shelf Energy
WNP-2	Washington Nuclear Project No. 2
WPPSS	Washington Public Power Supply System
ZPA	zero period acceleration

1.8 CONFORMANCE TO NRC REGULATORY GUIDES

1.8.1 INTRODUCTION

This section of the FSAR contains information on Energy Northwest's conformance assessment of CGS to Regulatory Guides, Division 1, Power Reactor Guides and revisions thereof as noted.

Since the scope of equipment responsibility is project unique and the time of equipment design, procurement, manufacture, installation, and operation varies with the supplier, a unique assessment for the nuclear steam supply system (NSSS) scope of supply and balance of plant (BOP) scope of supply is necessary and is presented.

1.8.2 NUCLEAR STEAM SUPPLY SYSTEM SCOPE OF SUPPLY EVALUATION

The following paragraphs define the nomenclature and the manner in which the NSSS scope of supply assessment is to be interpreted.

Regulatory Guides - Incorporated in the Design

This section serves to identify specific safety or regulatory guides which were included in the plant as a design commitment during the construction permit review. It also identifies those incorporated by commitment after the construction permit issuance. All of these are specifically noted as "Incorporated in the Design."

Regulatory Guides - Assessed Capability in the Design

For those other regulatory guides which have been issued before, during, or after the construction permit issuance, Energy Northwest (through his agents and/or suppliers) has performed an assessment evaluation to determine the capability of the previously approved design to accommodate and meet these new requirements. These are noted as "Assessed Capability in the Design."

Conformance to the regulatory guide falls under either one of two categories - "Full Compliance" or "Meeting Intent Through an Alternate Approach."

Regulatory Guide - Full Compliance

Any regulatory guide so noted, whether by direct conformance or by assessed capability, complies with subject requirements as described in the FSAR.

Regulatory Guide - Meeting Intent by Alternate Approach

This designation is based on NRC rules which state that "Regulatory Guides are not substitutes for regulations, and compliance with them is not required. Methods and solutions different from those set out in the guides will be acceptable if they provide a basis for the findings requisite to the issuance or continuance of a permit or license by the Commission." The description and justification of an alternate approach is provided where this method is employed.

The following evaluation represents the NSSS scope of supply regulatory guide assessment.

Regulatory Guide 1.1, Revision 0, November 1970

Net Positive Suction Head for Emergency Core Cooling and Containment Heat Removal Pumps.

Regulatory Guide Intent:

This guide prohibits design reliance on pressure and/or temperature transients expected during a loss-of-coolant accident (LOCA) for ensuring adequate net positive suction head (NPSH). The requirements of this regulatory guide are applicable to the high-pressure core spray (HPCS), low-pressure core spray (LPCS), and residual heat removal (RHR) pumps.

Applicable Assessment:

Incorporated in design.

Compliance or Alternate Approach Statement:

Identified NSSS scope of supply analysis, design, and/or equipment used in CGS is in full compliance with this regulatory guide.

General Compliance or Alternate Approach Assessment:

The boiling water reactor (BWR) design conservatively assumes 0 psig containment pressure and maximum expected temperature of the pumped fluids; thus no reliance is placed on pressure and/or temperature transients to assure adequate NPSH.

Requirements for NPSH are available at the centerline of the pump suction nozzles for each pump.

Specific Evaluation Reference:

See Sections 6.2 and 6.3.

Similar Application Reference:

Similar application was used for LaSalle and GESSAR.

Regulatory Guide 1.2, Revision 0, November 1970

Thermal Shock to Reactor Pressure Vessels

Regulatory Guide Intent:

This regulatory guide states that potential reactor pressure vessel brittle fracture which may result from emergency core cooling systems (ECCS) operation need not be reviewed in individual cases if no significant changes in presently approved core and pressure vessel designs are proposed. Should it be concluded that the margin of safety against reactor pressure vessel brittle failure due to ECCS operation is unacceptable, and engineering solution, such as annealing, could be applied to ensure adequate recovery of the fracture toughness properties of the vessel material. This regulatory guide requires that available engineering solutions be outlined and requires that it be demonstrated that the design does not preclude their use.

Application Assessment:

Incorporated in design.

Compliance or Alternate Approach Statement:

Identified NSSS scope of supply analysis, design, and/or equipment used in CGS is in compliance with the intent of this regulatory guide through the incorporation of the alternate approach cited.

General Compliance or Alternate Approach Assessment:

The reactor pressure vessel used for CGS employs no significant core or vessel design changes from previously approved BWR pressure vessels such as Browns Ferry, all units.

An investigation of the structural integrity of BWR pressure vessels during a design-basis accident (DBA) has been conducted (see NEDO-10029, "An Analytical Study on Brittle Fracture of GE-BWR Vessel Subject to the Design Basis Accident"). It has been determined, based on methods of fracture mechanics, that no failure of the vessel by brittle fracture as a result of a DBA will occur.

The investigation included

a. A comprehensive thermal analysis considering the effect of blowdown and the LPCI system reflooding,

b. A stress analysis considering the effects of pressure, temperature, seismic load, jet load, dead weight, and residual stresses,

c. The radiation effect on material toughness [nil ductility transition temperature (NDTT) shift and critical stress intensity], and

d. Methods for calculating crack tip stress intensity associated with a nonuniform stress field following DBA.

This analysis incorporated very conservative assumptions in all areas (particularly in the areas of heat transfer, stress analysis effects of radiation on material toughness, and crack tip stress intensity). Therefore, the results reported in NEDO-10029 provide an upper bound limit on brittle fracture failure mode studies. Because of the upper bound approach, it is concluded that catastrophic failure of the pressure vessel due to the DBA is shown to be impossible from a fracture mechanics point of view. In the case studies, even if an acute flaw does form on the vessel inner wall, it will not propagate as the result of the DBA.

The criteria of 10 CFR 50, Appendix G, are interpreted as establishing the requirement for annealing. Paragraph IV C of Appendix G requires vessels to be designed for annealing of the beltline only where the predicted value of adjusted RT_{NDT} exceeds 200°F as defined in paragraph NB2331 of the ASME Section III Code. This predicted value is not exceeded; therefore design for annealing is not required.

Specific Evaluation Reference:

See Section 5.3.1.5.

Similar Application Reference:

Similar application was used for Browns Ferry 1, 2, and 3.

Regulatory Guide 1.6, Revision 0, March 1971

Independence Between Redundant Standby (Onsite) Power Source and Between Their Distribution Systems

Regulatory Guide Intent:

The guide states the extent and nature of independence of the two onsite power divisions required by General Design Criterion (GDC) 17. Key features that ensure operation and prevent cascading single failures from disrupting both power systems are delineated.

Application Assessment:

Incorporated in design.

Compliance or Alternate Approach Statement:

Identified NSSS scope of supply analysis, design, and/or equipment used in this facility is in compliance with the intent of this regulatory guide through the incorporation of the alternate approach cited.

General Compliance or Alternate Approach Assessment:

This regulatory guide is applicable to redundant standby (onsite) power sources and their distribution systems.

HPCS Onsite Power System (NSSS Scope of Supply)

Division 3 (HPCS) is provided with one offsite power source. Only one offsite supply is connected because no credit is given to offsite power sources in accident analysis. The diesel generator breaker can be closed automatically only if the other source breakers to the (HPCS) load group are open.

When the HPCS diesel generator breaker is closed, no other source breaker can be closed automatically. No other means exist for automatically connecting redundant load groups with each other. The HPCS diesel generator may be manually connected to either Division 1 or to Division 2 in the extended station blackout (SBO) or non-DBA loss of offsite power (LOOP) scenario described in Section 8.3.1.1.7.2.1. The source breakers are administratively controlled in the open position to prevent paralleling of standby sources.

Sufficient interlocks are provided to prevent paralleling the diesel generators manually by operator error during loss of offsite power. Division 3 diesel generator is provided with only one prime mover.

The HPCS division dc load group is fed from one battery charger and one battery.

The HPCS standby power source and distribution system is independent from the other two standby power sources and associated distribution system in the plant.

Specific Evaluation Reference:

See Section 8.3.1.2.

Similar Application Reference:

Similar application was used for LaSalle.

Regulatory Guide 1.9, Revision 0, March 1971

Selection of Diesel Generator Set Capacity for Standby Power Supplies

Regulatory Guide Intent:

This guide provides an approach for ensuring sufficient onsite power capability and for determining load requirements of diesel generator set power sources.

Application Assessment:

Incorporated in design.

Compliance or Alternate Approach Statement:

Identified NSSS scope of supply analysis, design, and/or equipment used in this facility is in compliance with the intent of this regulatory guide through the incorporation of the alternate approach cited.

General Compliance or Alternate Approach Assessment:

This regulatory guide is applicable to the standby ac power supply for the HPCS diesel. The specific guidelines are unduly restrictive when applied to the selection of the diesel generator set dedicated to the HPCS system. This is mainly due to the unique application of the special HPCS equipment relative to normal diesel generator units.

Specific conformance and alternate positions to and with Regulatory Guide 1.9 are described in the following statements:

Regulatory Guide 1.9, Position 2 Conformance

Chapter 8 illustrates that the 2000-hr rating of the HPCS diesel generator, the 90% of 30-minute rating, and the maximum coincidental load, are in conformance with this position. Intermittent loads such as motor-operated valves are considered for long-term loads.

Regulatory Guide 1.9, Position 3 Conformance

CGS load requirements were verified as test data was completed and analyzed, following the preoperational tests.

Regulatory Guide 1.9, Position 4 Conformance

The HPCS diesel generator unit is considered as a unique application with justifiable departure from the strict conformance to Regulatory Guide 1.9, Revision 0, regarding voltage and frequency limits during the initial loading transient. The HPCS system consists of one large pump and motor combination which represents more than 90% of the total load; consequently, limiting the momentary voltage drop to 25% and the momentary frequency drop to 5% would not significantly enhance the reliability of HPCS operation. To meet the specific regulatory guide requirements, a diesel generator unit approximately two to three times as large as that required to carry the continuous rated load would be necessary. The specific diesel engine-electric generator-pump assembly was designed specifically for this integral operation. The frequency and voltage over-shoot requirements of Regulatory Guide 1.9, Revision 0, are met. A factory testing program on a prototype unit has verified the following functions:

a. System fast-start capabilities,

b. Load-carrying capability,

c. Load shedding capability,

d. Ability of the system to accept and carry the required loads, and

e. The mechanical integrity of the diesel-engine generator unit and all of the major system auxiliaries.

GE Licensing Topical Report, HPCS Power Supply, NEDO-10905, describes the theoretical analytical aspects of the unique application including prototype and reliability test considerations.

The design of the HPCS diesel generator conforms with the applicable sections of IEEE criteria for Class 1E "Electrical Systems for Nuclear Power Generation Stations," IEEE 308-1971.

The generator has the capability of providing power for starting the required loads with operationally acceptable voltage and frequency recovery characteristics. A partial or complete load rejection will not cause the diesel engine to trip on overspeed.

A special prototypic test conducted at the LaSalle facility verified the hardware and load aspects of the HPCS power supply concept. This test is described in topical report NEDO-10905, Revision 3.

The scope of Regulatory Guide 1.9, Revision 0 does not include recommendations for surveillance testing. The surveillance requirements for demonstrating the operability of the diesel generators are consistent with the recommendations of Regulatory Guide 1.9 Revision 3 as described in the Bases for Technical Specification B 3.8.1. Additionally, periodic testing of all diesel generators is accomplished at intervals specified in the Technical Specifications (TS) which are controlled under the Surveillance Frequency Control Program (SFCP). Compliance with Regulatory Guide 1.9 Rev. 0, as an acceptable basis for the selection of diesel generator sets of sufficient margin to implement General Design Criterion 17, remains as described herein.

Specific Evaluation Reference:

See Section 8.3.1.2.1.4.

Similar Application Reference:

Similar application was used for LaSalle; for comparison see Table 8.3-6.

Regulatory Guide 1.13, Revision 0, March 1971

Fuel Storage Facility Design Basis

Regulatory Guide Intent:

This guide delineates design criteria that are appropriately applied to the fuel storage facility of the CGS plant.

Application Assessment:

Incorporated in design.

Compliance or Alternate Approach Statement:

Identified NSSS scope of supply analysis, design, and/or equipment used in this facility is in compliance with the intent of this regulatory guide through the incorporation of the alternate approach cited.

General compliance or Alternate Approach Assessment:

This regulatory guide is applicable to the refueling platform within NSSS scope of supply.

The refueling platform is designed to prevent it from toppling into the pools during a safe shutdown earthquake (SSE). Redundant safety interlocks are provided as well as limit switches to prevent accidentally running the grapple into the pool walls.

Specific Evaluation Reference:

See Section 9.1.4.3.

Similar Application References:

Similar application was used for Nine Mile Point 2.

Regulatory Guide 1.20, Revision 2, May 1976

Comprehensive Vibration Assessment Program for Reactor Internals During Preoperational and Initial Startup Testing

Regulatory Guide Intent:

Regulatory Guide 1.20 describes a comprehensive vibration assessment program for reactor internals during preoperational and initial startup testing. The vibration assessment program meets the requirements of Criterion 1, "Quality Standards and Records," of Appendix A to 10 CFR Part 50 and Section 50.34, "Contents of Applications; Technical Information," of 10 CFR Part 50.

Application Assessment:

Incorporated in design.

Compliance or Alternate Approach Statement:

Identified NSSS scope of supply analysis, design, and/or equipment used in this facility is in compliance with the intent of this regulatory guide through the incorporation of the alternate approach cited.

General or Alternate Approach Statement:

This regulatory guide is applicable to the core support structures and other reactor internals.

A vibration measurement program has been defined for the confirmatory testing of this plant during initial startup tests.

CGS *reactor internals were tested in accordance with provisions of Regulatory Guide 1.20, Revision 2, Category IV, using Tokai-2 as the limited valid prototype.*

Specific Evaluation Reference:

See Sections 3.9.2.1, 3.9.2.3, and 3.9.2.4.

Similar Application Reference:

Similar application was used for Browns Ferry 1.

Regulatory Guide 1.21, Revision 1, June 1974

Measuring, Evaluating, and Reporting Radioactivity in Solid Wastes and Releases of Radioactive Materials in Liquid and Gaseous Effluents from Light-Water-Cooled Nuclear Power Plants

Regulatory Guide Intent:

Regulatory Guide 1.21 describes programs for measuring, reporting, and evaluating releases of radioactive materials in liquid and gaseous effluents and guidelines for classifying and reporting the categories and curie content of solid wastes.

Application Assessment:

Assessed capability in design.

Compliance or Alternate Approach Statement:

Identified NSSS scope of supply analysis, design, and/or equipment used in this facility is in compliance with the intent of this regulatory guide through the incorporation of the alternate approach cited.

General Compliance or Alternate Approach Assessment:

The process and effluent radiological monitoring and sampling system is designed to provide the monitoring and sampling capability required to make the measurements, evaluations, and reports recommended by this guide.

The Reactor Building elevated release duct radioactivity monitoring and sampling portion of the process radiation monitoring (PRM) system complies with ANSI N13.1-1999 (see Figure 11.5-11). All other portions of the PRM system, including the portion that monitors the effluent flow inside the Reactor Building elevated release duct, comply with ANSI N13.1-1969. All other systems comply with ANSI N13.1-1969.

The radiation monitoring systems (RMS) provided to meet these objectives are

a. For gaseous effluent streams

   Reactor building ventilation exhaust plenum RMS

b. For liquid effluent streams

   1. Radwaste effluent RMS, and

   2. Service water RMS

c. For gaseous process streams

1. Offgas pretreatment RMS,
2. Offgas posttreatment RMS, and
3. Carbon bed vault RMS

d. For liquid process streams

1. RHR service water RMS, and
2. Reactor building closed cooling water RMS

These systems have the capability for alarm and initiation of automatic closure of waste treatment discharge valves in the affected systems prior to exceeding the normal operation limits specified in Technical Specifications thereby satisfying the intent of the regulatory guide.

Specific Evaluation Reference:

See Sections 7.6.1.1 and 11.5.1 and 11.5.2.2.1.5.

Similar Application Reference:

Similar application has not been used for other projects.

Regulatory Guide 1.22, Revision 0, February 1972

Periodic Testing of Protection System Actuation Function

Regulatory Guide Intent:

This guide describes acceptable design approaches that facilitate the periodic testing, during reactor operation, of actuation devices/equipment incorporated into the reactor protection system design. This regulatory guide is applicable to the systems within NSSS scope of supply listed in this regulatory guide.

Application Assessment:

Incorporated in design.

Compliance or Alternate Approach Statement:

Identified NSSS scope of supply analysis, design, and/or equipment used for this facility is in full compliance with this regulatory guide.

General Compliance or Alternate Approach Assessment:

Compliance for each system is discussed for this plant in the listed references.

	Section
Reactor protection system	7.2.2.3
Emergency core cooling system	
HPCS	7.3.2.1.3
Automatic depressurization system (ADS)	7.3.2.1.3
LPCS	7.3.2.1.3
LPCI (RHR)	7.3.2.1.3
Primary containment and reactor vessel isolation control system (PCRVICS)	7.3.2.1.3
Reactor core isolation cooling (RCIC)	7.4.2.3
Leak detection system	7.6.2.4
HPCS standby power supply	8.1.3
RHR system containment spray cooling system	7.3.2.1.3
Suppression pool cooling system	7.3.2.1.3
Reactor shutdown cooling system	7.4.2.3
Standby liquid control system	7.4.2.3
Process radiation monitoring system	7.6.2.4

Specific Evaluation Reference:

See above.

Similar Application Reference:

Similar application has not been used for other projects.

Regulatory Guide 1.26, Revision 3, February 1976

Quality Group Classifications and Standards for Water-, Steam-, and Radioactive-Waste-Containing Components of Nuclear Power Plants

Regulatory Guide Intent:

Regulatory Guide 1.26 describes a quality classification system for determining acceptable quality standards for important to safety components containing water, steam, or radioactive material other than those components addressed in 10 CFR 50.55a.

Application Assessment:

Assessed capability in design.

Compliance or Alternate Approach Statement:

Identified NSSS scope of supply analysis, design, and/or equipment used in this facility complies with the guidance set forth in this regulatory guide.

General Compliance or Alternate Approach Assessment:

The definition of quality group classifications for this plant was made initially and recorded in the Preliminary Safety Analysis Report (PSAR) in accordance with ASME Boiler and Pressure Vessel Code (B&PV), Sections III and VIII. Quality group classifications were maintained during design and construction and are actively maintained during plant operations and modifications commensurate with the safety functions performed by the safety-related components.

This regulatory guide is applicable to Quality Groups B through D pressure parts including piping, pumps, valves, and vessels. Section 3.2 shows the quality groups classifications of these parts.

Note: Classification of the RWCU system in the Radwaste Building takes exception to Reg. Guide 1.26. Piping, pumps, valves, and supports of the RWCU system in the Radwaste Building have been reclassified as Quality Group D, taking exception to the Reg. Guide 1.26 recommended classification of Quality Group C. Quality Group classification does meet the intent of Reg. Guide 1.26 footnote 6. Valves RWCU-V-40, RWCU-V-5A, RWCU-V-5B, RWCU-V-768, and RWCU-V-769 provide additional leak tight isolation of the reclassified from the Reactor Coolant Pressure Boundary.

Specific Evaluation Reference:

See Section 3.2.

Similar Application Reference:

Similar application was used for LaSalle.

The italicized information is historical and was provided to support the application for an operating license.

Regulatory Guide 1.28, Revision 0, June 1972

Quality Assurance Program Requirements (Design and Construction).

Regulatory Guide Intent:

This guide describes an acceptable method of complying with the NRC's regulations with regard to overall quality assurance program requirements.

Application Assessment:

Assessed capability in design.

Compliance or Alternate Approach Statement:

The identified BWR Quality Assurance Program used in this facility reflects compliance with provisions of NRC regulations and regulatory guides or NRC-approved alternate positions.

General Compliance or Alternate Approach Assessment:

The General Electric BWR Quality Assurance Program has been developed over the years such that at any point in time it has been in compliance with mandatory regulatory requirements such as 10 CFR 50, Appendix B, and the ASME Code. Implementation of the applicable ANSI-N45.2 series standards and the associated NRC regulatory guides (or NRC-approved GE alternate positions) has been an evolutionary process and although partial implementation has always been effected before the date of issue of the regulatory guide or "AEC Guidance on Quality Assurance," which recognized applicable ANSI standards, full implementation was not necessarily in place until the GE commitment date (see Attachment A for complete listing of GE commitment dates and extent of commitment).

Since GE operates under a single quality assurance (QA) program, quality system improvements, such as more formalized audits or certification programs, are generally implemented across the board on all active projects with no opportunity for retrofit of completed work; therefore, work performed later in a project is typically subject to more quality assurance effort as a result of additional requirements. Attachment B gives a graphic representation of the time relation of some of the major project activities with the date of issue of regulatory guides and the GE commitment dates. Because of the long generation cycle of the related ANSI Standard, GE had already

upgraded its QA program to at least partially implement each of the related ANSI Standards, where applicable, prior to the date of issue of the regulatory guide.

Attachment B also shows approximate dates of NRC and utility customer/architect-engineer QA audits. These audits have been performed frequently enough and over a long enough time period to establish confidence that GE has been following a QA program which has kept current with customer and regulatory requirements. Obviously, where most equipment is ordered years in advance of shipment, the QA program at the time of shipment will necessarily be somewhat different from that which was in effect at the time of ordering; however, at any point in time the GE QA program has been equal or better than the requirements in effect at that time.

Specific Evaluation Reference:

Information was provided at the PSAR stage.

Similar Application Reference:

Similar application has not been used for other projects.

Regulatory Guide 1.29, Revision 3, September 1978

Seismic Design Classification

Regulatory Guide Intent:

Regulatory Guide 1.29 describes an acceptable method of identifying and classifying those features of light-water-cooled nuclear power plants that should be designed to withstand the effects of the SSE.

Application Assessment:

Assessed capability in design.

Compliance or Alternate Approach Statement:

Identified NSSS scope of supply analysis, design, and/or equipment used in this facility is in compliance with the intent of this regulatory guide through the incorporation of the alternate approach cited.

General Compliance or Alternate Approach Assessment:

This regulatory guide is used as a basis for defining the systems and components which must meet Seismic Category I requirements.

For the purpose of defining equipment that should be described to withstand the SSE, NSSS equipment conforms to the guide. The regulatory guide needs to be more specifically integrated in the following areas:

C.1(b)

Application of this guide is limited to those reactor vessel internals which use engineered safety features, such as core spray piping, core spargers, and hardware, etc.

C.1(h)

The component cooling water portions of the reactor recirculation pumps are not required to be Seismic Category I since the pumps do not perform a safety function.

Specific Evaluation Reference:

See Section 3.2, Table 3.2-1, and the OQAPD.

Similar Application Reference:

Similar application was used for LaSalle.

Regulatory Guide 1.30, Revision 0, August 1972

Quality Assurance Requirements for the Installation, Inspection, and Testing of Instrumentation and Electric Equipment.

Regulatory Guide Intent:

This guide describes an acceptable method of complying with the NRC's regulations with regard to overall QA program requirements.

Application Assessment:

Assessed capability in design.

Compliance or Alternate Approach Statement:

The identified BWR Quality Assurance Program used in this facility reflects compliance with the provisions of NRC regulatory guide or NRC regulations and NRC-approved alternate positions.

General Compliance or Alternate Approach Assessment:

Reference compliance assessment for Regulatory Guide 1.28.

Specific Evaluation Reference:

Information was provided at the PSAR stage. Compliance is discussed in the OQAPD.

Similar Application Reference:

Similar application has not been used for other projects.

Regulatory Guide 1.31, Revision 1, June 1973

Control of Stainless Steel Welding

Regulatory Guide Intent:

Regulatory Guide 1.31 describes an acceptable method of implementing requirements with regard to the control of welding when fabricating and joining austenitic stainless steel components and systems.

Application Assessment:

Assessed capability in design.

Compliance or Alternate Approach Statement:

Identified NSSS scope of supply analysis, design, and/or equipment used in this facility is in compliance with the intent of this regulatory guide through the incorporation of the alternate approach cited.

General Compliance or Alternate Approach Assessment:

All austenitic stainless steel weld filler materials were supplied with a minimum of 5% delta ferrite. This amount of ferrite is considered adequate to prevent microfissuring in austenitic stainless steel welds.

An extensive test program performed by GE, with the concurrence of the NRC, has demonstrated that controlling weld filler metal ferrite at 5% minimum produces production welds which meet the requirements of this regulatory guide.

A total of approximately 400 production welds in five BWR plants were measured and all welds met the requirements of the Interim Regulatory Position.

Specific Evaluation Reference:

See Section 5.2.3.

Similar Application Reference:

Similar application was used for LaSalle.

Regulatory Guide 1.32, Revision 1, March 1976

Use of IEEE 308-1974, "Criteria for Class 1E Electric Systems for Nuclear Power Generating Stations"

Regulatory Guide Intent:

This guide describes a method for implementation of electrical safety related equipment design relative to GDC 17 and 18. This guide does contain some conflicts between GDC 17 and IEEE 308-1974 that of course will require resolution by plant design implementation. This regulatory guide is applicable to the battery and battery charger of the HPCS standby power system.

Applicable Assessment:

Assessed capability in design.

Compliance or Alternate Approach Statement:

Identified NSSS scope of supply analysis, design, and/or equipment used in this facility is in compliance with the intent of this regulatory guide through incorporation of the alternate approach cited.

General Compliance or Alternate Approach Assessment:

The HPCS battery charger has sufficient capacity to restore its battery to full charge under the maximum steady-state load within a 24-hr period. A period of 24 hr is considered to be adequate to restore the battery from the design minimum charge state to the fully charged state irrespective of the status of the plant.

Specific Evaluation Reference:

See Section 8.3.1.2.

Similar Application Reference:

Similar application was used for LaSalle.

Regulatory Guide 1.34, Revision 0, December 1972

Control of Electroslag Weld Properties.

Regulatory Guide Intent:

Regulatory Guide 1.34 describes an acceptable method of implementing requirements regarding control of weld properties when fabricating electroslag welds for nuclear components made of ferritic or austenitic materials.

Application Assessment:

Not applicable.

Compliance or Alternative Approach Statement:

Not applicable.

General Compliance or Alternate Approach Assessment:

The electroslag welding process is not used on components within the NSSS scope of supply. Therefore this regulatory guide is not applicable.

Specific Evaluation Reference:

Not applicable.

Similar Application Reference:

Not applicable.

Regulatory Guide 1.37, Revision 0, March 1973

Quality Assurance Requirements for Cleaning of Fluid Systems and Associated Components of Water-Cooled Nuclear Power Plants.

Regulatory Guide Intent:

This guide describes an acceptable method of complying with the NRC's regulations with regard to overall QA program requirements.

Application Assessment:

Assessed capability in design.

Compliance or Alternate Approach Statement:

The identified BWR Quality Assurance Program used in this facility reflects compliance with the provisions of NRC regulations and NRC regulatory guide or NRC-approved alternate position.

General Compliance or Alternate Approach Assessment:

Reference compliance assessment for Regulatory Guide 1.28.

Specific Evaluation Reference:

Information was provided at the PSAR stage. Compliance is discussed in the OQAPD.

Similar Application Reference:

Similar application has not been used for other projects.

Regulatory Guide 1.38, Revision 2, May 1977

Quality Assurance Requirements for Packaging, Shipping, Receiving, Storage and Handling of Items for Water-Cooled Nuclear Power Plants.

Regulatory Guide Intent:

This guide describes an acceptable method of complying with the NRC's requirements for handling of nuclear materials.

Application Assessment:

Assessed capability in design.

Compliance or Alternate Approach Statement:

The identified BWR Quality Assurance Program used in this facility reflects compliance with the provisions of NRC regulations and the NRC regulatory guide or NRC-approved alternate position.

General Compliance or Alternate Approach Assessment:

Reference compliance assessment for Regulatory Guide 1.28.

Specific Evaluation Reference:

Information was provided at the PSAR stage.

Similar Application Reference:

Similar application has not been used for other projects.

Regulatory Guide 1.41, Revision 0, March 1973

Preoperational Testing of Redundant On-Site Electric Power Systems to Verify Proper Load Group Assignments.

Regulatory Guide Intent:

The requirements of this regulatory guide are applicable to the total onsite electric power systems within Energy Northwest's responsibility.

Application Assessment:

Assessed capability in design.

Compliance or Alternate Approach Statement:

Identified NSSS scope of supply analysis, design, and/or equipment used in this facility is in full compliance with this regulatory guide.

General Compliance or Alternate Approach Assessment:

The HPCS power system is designed to be tested independently of any other redundant load group.

Specific Evaluation Reference:

See Sections 8.3 and 14.2.

Similar Application Reference:

Similar application was used for LaSalle.

Regulatory Guide 1.43, Revision 0, May 1973

Control of Stainless Steel Weld Cladding of Low-Alloy Steel Components

Compliance or Alternate Approach Statement:

This regulatory guide is not applicable since stainless steel cladding on coarse grain low-alloy steel for safety class components is not used.

General Compliance or Alternate Approach Assessment:

Not applicable.

Specific Evaluation Reference:

Not applicable.

Regulatory Guide 1.44, Revision 0, May 1973

Control of the Use of Sensitized Steel

Regulatory Guide Intent:

The purpose of Regulatory Guide 1.44 is to address GDC 1 and 4 and 10 CFR 50 Appendix B requirements to control "the application and processing of stainless steel to avoid severe sensitization could lead to stress corrosion cracking." The guide proposes that this should be done by limiting sensitization due to welding as measured by ASTM A 262 Practice A or E, or another method that can be demonstrated to show nonsensitization in austenitic stainless steels.

Application Assessment:

Assessed capability in design.

Compliance or Alternate Approach Statement:

Identified NSSS scope of supply analysis, design, and/or equipment used in this facility is in compliance with the intent of this regulatory guide through the incorporation of the alternate approach cited.

General Compliance or Alternate Approach Assessment:

Tests by GE indicate that the test specified by A262 A or E (Detecting Susceptibility to Intergranular Attack in Stainless Steel) detects sensitization in a gross way, and the tests do not provide a precise method of predicting susceptibility to stress corrosion cracking in the BWR environment.

All austenitic stainless steel for CGS was purchased in the solution heat treated condition in accordance with applicable ASME and ASTM specifications. Carbon content was limited to 0.08% maximum, and cooling rates from solution heat treating temperatures were required to be rapid enough to prevent sensitization.

Welding heat input was restricted to 110,000 joules per inch maximum, and interpass temperature was restricted to 305°F. High heat welding processes such as block welding and electroslag welding were not permitted. All weld filler metal and castings were required by specification to have a minimum of 5% ferrite.

Whenever any wrought austenitic stainless steel was heated to temperatures over 800°F, by means other than welding or thermal cutting, the material was re-solution heat treated.

These controls were used to avoid severe sensitization and to comply with the intent of Regulatory Guide 1.44.

Specific Evaluation Reference:

See Section 5.2.3.

Similar Application Reference:

Similar application was used for LaSalle.

Regulatory Guide 1.45, Revision 0, May 1973

Reactor Coolant Pressure Boundary Leak Detection System.

Regulatory Guide Intent:

The guidelines are prescribed to ensure that leakage detection and collection systems provide maximum practical identification of leaks from within the reactor coolant pressure boundary (RCPB).

Application Assessment:

Assessed capability in design.

Compliance or Alternate Approach Statement:

Identified NSSS scope of supply analysis, design, and/or equipment used in this facility is in compliance with the intent of this regulatory guide through the incorporation of the alternate approach cited.

General Compliance or Alternate Approach Assessment:

The leak detection system consists of temperature, pressure, fission product monitoring and flow sensors with associated instrumentation and alarms. This system detects, annunciates, and isolates (in certain cases) leakages in the following systems:

a. Main steam lines,
b. Coolant systems within the drywell,
c. Reactor water cleanup (RWCU) system,
d. RHR system,
e. RCIC system,
f. Feedwater system, and
g. HPCS system.

Leakage is separated into identified and unidentified categories thus meeting position C.1 of Regulatory Guide 1.45. The affected systems and the leakage detection methods are discussed in Section 5.2.5.1.

Small unidentified leaks (5 gpm and less) inside the drywell are detected by temperature changes, pressure changes, drain sump pump activities, fission product monitoring, and floor drain flow monitoring; floor drain flow includes drywell cooler condensate flow.

Large leaks are also detected by changes in reactor water level and changes in flow rates in process lines.

The 5 gpm leakage rate is the limit on unidentified leakage inside the drywell. The leak detection system is capable of monitoring the flow rates with an accuracy of 1 gpm and is thus in compliance with paragraph C.2 of Regulatory Guide 1.45.

By monitoring drywell equipment and floor drain sump flow rates, which includes drywell coolers' condensate flow rates and fission products (airborne particulate and gaseous radioactivity), position C.3 is satisfied.

Isolation and/or alarm of affected systems and the detection methods used are summarized in Table 5.2-12.

Monitoring of coolant for radiation in the Residual Heat Removal (RHR) and Reactor Water Cleanup (RWCU) heat exchangers satisfies position C.4 of the Regulatory Guide. (For system details see Sections 7.6.1.2 and 11.5.)

The three methods differ in sensitivity and response time. Position C.5 requires the leak detection system be able to detect a leakage rate of 1 gpm in less than 1 hour. See Section 7.6.2.4 for further discussion.

The leakage detection system instruments listed in Table 7.6-2 have been evaluated and are capable of performing their functions following an operating basis seismic event. The drywell airborne particulate monitoring channel will remain functional following a safe shutdown earthquake. This satisfies position C.6 of Regulatory Guide 1.45.

Leakage detection indicators and alarms are provided in the main control room. This satisfies C.7 for the NSSS scope of supply. Procedures are developed for converting the various indications to a common leakage equivalent for the operators to satisfy remainder of C.7.

The leakage detection systems are equipped with provisions to permit testing for operability and calibration during operation by the following methods:

a. Continuous monitoring of sump level compared to flow rates into sump,
b. Operability checked by comparing one method to another,
c. Simulation of signals into trip monitors, and
d. Channel "A" against Channel "B" of the same method.

Thus position C.8 is satisfied.

Limiting conditions for identified and unidentified leakage are established as 20 gpm and 5 gpm respectively, thus satisfying position C.9.

Specific Evaluation Reference:

See Sections 5.2.5 and 7.6.2.4.

Similar Application Reference:

Similar application was used for LaSalle.

Regulatory Guide 1.46, Revision 0, May 1973

Protection Against Pipe Whip Inside Containment

Regulatory Guide Intent:

Regulatory Guide 1.46 describes an acceptable basis for selecting the design locations and orientations of postulated breaks in fluid system piping within the reactor containment and for determining the measures that should be taken for restraint against pipe whipping that may result from such breaks.

Application Assessment:

Assessed capability in design.

Compliance or Alternate Approach Statement:

Identified NSSS scope of supply analysis, design, and/or equipment used in this facility is in compliance with the intent of this regulatory guide through the incorporation of the alternate approach cited.

General Compliance or Alternate Approach Assessment:

This regulatory guide is applicable to the recirculation pipe lines.

The design of the containment structure, component arrangement, Class 1 pipe runs, pipe whip restraints and compartmentalization was done in consonance with the acknowledgment of protection against dynamic effects associated with postulated rupture of piping. Analytically sized and positioned pipe whip restraints were engineered to preclude damage based on the pipe break evaluation.

Pipe whip requirements for fluid system piping within the primary containment that, under normal operation, has service temperature greater than 200°F or pressures greater than 275 psig, complied with ANS N176, "Design Basis for Protection Against Pipe Whip," and Regulatory Guide 1.46 except as delineated in the following criteria for no breaks in Class 1 piping:

a. If Equation 10 of NB-365301, ASME Code Section III results in $S < 2.4\ S_m$ for ferritic or austenitic steels, no other requirements need be met. Stress range should be calculated between any two load sets (including zero load set) according to NB-3600 for upset and on operating basis earthquake (OBE) event transient;

b. If Equation 10 results in $2.4 < S < 3.0\ S_m$ for ferritic or austenitic steels, the cumulative usage factor, U, calculated on the bases of Equation 14 of NB-3653.6, must be less than 0.1; and

c. If Equation 10 results in $S > 3.0\ S_m$ for ferritic or austenitic steels, then the stress value in Equations 12 and 13 of NB-3653.6 must not be greater than $2.4\ S_m$.

Specific Evaluation Reference:

See Section 3.6.

Similar Application Reference:

Similar application was used in GESSAR.

Regulatory Guide 1.47, Revision 0, May 1973

Bypassed and Inoperable Status Indication for Nuclear Power Plant Safety Systems.

Regulatory Guide Intent:

This guide describes an acceptable method of complying with the requirements of IEEE 279-1971 and Appendix B to 10 CFR 50.

Application Assessment:

Assessed capability in design.

Compliance or Alternate Approach Statement:

Identified NSSS scope of supply analysis, design, and/or equipment used in this facility is in compliance with the intent of the regulatory guide through the incorporation of the alternate approach cited.

General Compliance or Alternate Approach Assessment:

The alternate approach is provided in Section 7.1.2.4.

Specific Evaluation Reference:

See Section 7.1.2.4.

Similar Application Reference:

Similar application was used for LaSalle.

Regulatory Guide 1.48, Revision 0, May 1973

Design Limits and Loading Combinations for Seismic Category I Fluid System Components.

Regulatory Guide Intent:

Regulatory Guide 1.48 provides acceptable design limits and appropriate combinations of loadings associated with normal operation, postulated accidents, and specified seismic events for the design of the Seismic Category I fluid system components.

Application Assessment:

Assessed capability in design.

Compliance or Alternate Approach Statement:

Identified NSSS scope of supply analysis, design, and/or equipment used in this facility is in compliance with the intent of this regulatory guide through the incorporation of the alternate approach cited.

General Compliance or Alternate Approach Assessment:

For a comparison of NSSS with Regulatory Guide 1.48, see the attached tabulation.

The design basis was representative of good industry practices at the time of design, procurement, and manufacture and is shown to be in general agreement with requirements of Regulatory Guide 1.48, with the following clarifications:

a. The probability of an OBE of the magnitude postulated for CGS is consistent with its classification as an emergency event. However, for design conservatism, loads due to the OBE vibration motion have been included under upset conditions; loads due to the OBE vibratory motion plus associated transients, such as a turbine trip, have been considered in the equipment design under emergency conditions consistent with the probability of the OBE occurrence; and

b. The use of increased stress levels for Class 2 components is consistent with industry practice as specified in ASME Code Section III.

Specific Evaluation Reference:

See Section 3.9.3.

Similar Application Reference:

Similar application was used for LaSalle.

COMPARISON WITH REGULATORY GUIDE 1.48

		NRC Regulatory Guide 1.48			Columbia Generating Station			
Component	Plant Condition	Loading Combination[1/]	Design Limit	Regulatory Guide Paragraph	Loading Combination[(f)]	Code allowable Stresses	ASME Section III Reference	How CGS Compares With NRC Regulatory Guide 1.48
Class 1 vessels	Upset (U)	(NPC or UPC) + 0.5 SSE	NB-3223	1.a	(NPC or UPC), 0.5 SSE	3.0Sm (includes secondary stresses)	NB-3223	Reflects industry position
	Emergency (E)	EPC	NB-3224 2/	1.b	EPC, 0.5 SSE + transient	1.8Sm	NB-3224	
	Faulted (F)	NPC + SSE + DSL	NB-3225	1.c	NPC + SEE + DSL	App.F-Sec. III	NB-3225	
Class 1 piping	U	(NPC or UPC) + 0.5 SSE	NB-3654	1.a	(NPC or UPC), 0.5 SSE	3.0Sm (includes secondary stresses)	NB-3654	Reflects industry position
	E	EPC	NB-3655 2/	1.b	EPC, 0.5 SSE + transient	2.25Sm	NB-3655	
	F	NPC + SSE + DSL	NB-3656	1.c	NPC + SSE + DSL	3.0Sm	NB-3656	
Class 1 pumps (inactive)	U	(NPC or UPC) + 0.5 SSE	NB-3223[5/]	2.a	(NPC or UPC), 0.5 SSE	1.65Sm	NB-3223	Reflects industry position
	E	EPC	NB-3224 1/	2.b	EPC, 0.5 SSE + transient	1.8Sm	NB-3224	
	F	NPC + SSE + DSL	NB-3225	2.c	NPC + SSE + DSL	App. F-Sect. III	NB-3225	
Class 1 pumps (active)	U	(NPC or UPC) + 0.5 SSE	NB-3222 5/	4.a.1	(NPC or UPC), 0.5 SSE	Not applicable	Not applicable	Not applicable
	E	EPC	NB-3222 6/	4.a.2	EPC			
	F	NPC + SSE + DSL	NB-3222 7/ 8/	4.a.3	NPC + SSE + DSL			
Class 1 valves (inactive) by analysis	U	(NPC or UPC) + 0.5 SSE	NB-3223[5/]	2a	(NPC or UPC), 0.5 SSE	Not applicable	Not applicable	Not applicable
	E	EPC	NB-3224 4/	2.b	EPC			
	F	NPC + SSE + DSL	NB-3225[2/]	2.c	NPC + SSE + DSL			
Class 1 valves (inactive) designed by either std. or alternative design rules	U	(NPC or UPC) + 0.5 SSE	1.1 Pr	3.a	(NPC or UPC), 0.5 SSE	1.1 Pr	NB-3525	Reflects industry position
	E	EPC	1.2 Pr	3.b	EPC, 0.5 SSE + transient	1.2 Pr	NB-3526	
	F	NPC + SSE + DSL	1.5 Pr	3.c	NPC + SSE + DSL	1.5 Pr	NB-3527	
Class 1 valves (active) by analysis	U	(NPC or UPC) + 0.5 SSE	NB-3222 5/	4.a.1	(NPC or UPC, 0.5 SSE	Not applicable	Not applicable	Not applicable
	E	EPC	NB-3222 6/	4.a.2	EPC			
	F	NPC + SSE + DSL	NB-3222 7/ 8/	4.a.3	NPC + SSE + DSL			
Class 1 valves (active) designed by std. or alternative design rules	U	(NPC or UPC) + 0.5 SSE	1.0 Pr	5.a.1	(NPC or UPC), 0.5 SSE	1.0 Pr	NB-3525	Reflects industry position
	E	EPC	1.0 Pr 6/	5.a.2	EPC	1.0 Pr (a)	NB-3526	
	F	NPC + SSE + DSL	1.0 Pr	5.a.3	NPC + SSE + DSL	1.0 Pr	NB-3527	

COMPARISON WITH REGULATORY GUIDE 1.48 (Continued)

		NRC Regulatory Guide 1.48			Columbia Generating Station			
Component	Plant Condition	Loading Combination[1/]	Design Limit	Regulatory Guide Paragraph	Loading Combination[(f)]	Code Allowable Stresses	ASME Section III Reference	How CGS Compares With NRC Regulatory Guide 1.48
Class 2 & 3 vessels (Division 1) of section VIII of the ASME Code	U	(NPC or UPC) + 0.5 SSE	1.1S	6.a	(NPC or UPC), 0.5 SSE	$\sigma m = 1.1S$	code case 1607	Faulted condition, NRC more conservative, reflects industry position
	E	EPC	1.1S [9/]	6.b	EPC,0.5 SSE + transient	(c)	NC/NB	
	F	NPC + SSE + DSL	1.5S	6.c	NPC + SSE + DSL	$\sigma m = 2.0S$	3321.1(b)	
Class 2 vessels (Division 2) of section VIII of the ASME Code	U	(NPC or UPC) + 0.5 SSE	NB-3223	7.a	(NPC or UPC), 0.5 SSE	Not applicable	Not applicable	Not applicable
	E	EPC	NB-3224 [2/]	7.b	EPC			
	F	NPC + SEE + DSL	NB-3225	7.c	NPC + SSE + DSL			
Class 2 & 3 piping	U	(NPC or UPC) + 0.5 SSE	NC3611.1(b)(4)(c)(b)(1)	8.a	(NPC or UPC), 0.5 SSE	1.2 Sh	NC/ND 3611.3(b)	NRC more conservative, Reflects industry position
	E	EPC	NC3611.1(b)(4)(c)(b)(1) [10/]	8.a	EPC,0.5 SSE + transient	1.8 Sh	NC/ND 3611.3(c)	
	F	NPC + SSE + DSL	NC3611.1(b)(4)(c)(b)(2)	8.b	NPC + SSE + DSL	2.4 Sh	(4)(b) (b) code case1606, NC/ND 3611.3(d) [see note (b)]	
Class 2 & 3 pumps (inactive)	U	(NPC or UPC) + 0.5 SSE	$\sigma m \le 1.1S \ge \frac{\sigma m + \sigma b}{1.5}$	9.a	(NPC or UPC), 0.5 SSE	Not applicable	Not applicable	Not applicable
	E	EPC	$\sigma m \le 1.1S \ge \frac{\sigma m + \sigma b}{1.5}$	9.a	EPC			
	F	NPC + SEE + DSL	$\sigma m \le 1.2S \ge \frac{\sigma m + \sigma b}{1.5}$	9.b	NPC + SEE + DSL			
Class 2 & 3 pumps (inactive)	U	(NPC or UPC) + 0.5 SSE	$\sigma m \le 1.1S \ge \frac{\sigma m + \sigma b}{1.5}$	10.a	(NPC or UPC), 0.5 SSE	$\sigma m = 1.1S$	Code case 1636, NC/ND3423 [see note (b)]	Reflects industry position
	E	EPC	$\sigma m \le 1.1S \ge \frac{\sigma m + \sigma b}{1.5}$ [11/]	10.a	EPC,0.5 SSE + transient	(a) (c)		
	F	NPC + SSE + DSL	$\sigma m \le 1.1S \ge \frac{\sigma m + \sigma b}{1.5}$	10.a	NPC + SSE + DSL	$\sigma m = 1.2S$		
Class 2 & 3 valves (inactive)	U	(NPC or UPC) + 0.5 SSE	1.1 Pr	11.a	(NPC or UPC), 0.5 SSE	$\sigma m = 1.1S$	Code case1636, NC/ND3621 [see note (b)]	Equally conservative
	E	EPC	1.1 Pr	11.a	EPC,0.5 SSE + transient	(c)		
	F	NPC + SSE + DSL	1.2 Pr	11.b	NPC + SSE + DSL	$\sigma m = 2.0S$		
Class 2 & 3 valves (active)	U	(NPC or UPC) + 0.5 SSE	1.0 Pr	12.a	(NPC or UPC), 0.5 SSE	$\sigma m = 1.1S$	Code case1636, NC/ND3621 [see note (b)]	Equally conservative (e)
	E	EPC	1.0 Pr [11/]	12.a	EPC,0.5 SEE + transient	(a) (c)		
	F	NPC + SSE + DSL	1.0 Pr	12.a	NPC + SSE + DSL	$\sigma m = 1.2S$		

COMPARISON WITH REGULATORY GUIDE 1.48 (Continued)

NOTES

Numerical indicators (e.g., 1/) in the regulatory guide portion of the table correspond to the footnotes of Regulatory Guide 1.48. Alphabetical indicators in CGS portion of table (or comparative column) correspond to the following:

[a]In addition to compliance with the design limits specified, assurance of operability under all design loading combinations shall be in accordance with Section 3.9.3.2.

[b]Referenced paragraphs of code currently in course of preparation.

[c]The design limit for local membrane stress intensity or primary membrane plus primary bending stress intensity is 150% of that allowed for general membrane (except as limited to 2.4S for inactive components under faulted condition). See Section 3.9.5.2.

[d]Not used.

[e]Inactive limits may be used since operability will be demonstrated in accordance with Section 3.9.3.2.

[f]When selecting plant events for evaluation, the choice of the events to be included in each plant condition is selected based on the probability of occurrence of the particular load combination. The combination of loads are those identified in Table 3.9-2.

LEGEND:

UPC = upset plant conditions
NPC = normal plant conditions
EPC = emergency plant conditions
DSL = dynamic system loading
SSE = safe shutdown earthquake

DELETED Contents of
Regulatory Guide 1.49, Revision 1, December 1973

Regulatory Guide 1.50, Revision 0, May 1973

Control of Preheat Temperature for Welding of Low-Alloy Steel

Regulatory Guide Intent:

This guide delineates preheat temperature control requirements and welding procedure qualifications supplementing those in ASME Sections III and IX.

Application Assessment:

Assessed capability in design.

Compliance or Alternate Approach Statement:

Identified NSSS scope of supply analysis, design, and/or equipment used in this facility is in compliance with the intent of this regulatory guide through the incorporation of the alternate approach cited.

General Compliance or Alternate Approach Assessment:

The use of low-alloy steel is restricted to the reactor pressure vessel. Other ferritic components in the RCPB are fabricated from carbon steel materials.

Preheat temperatures employed for welding of low-alloy steel meet or exceed the requirements of ASME Section III. Components were either held for an extended time at preheat temperature to ensure removal of hydrogen, or preheat was maintained until postweld heat treatment. The minimum preheat and maximum interpass temperature were specified and monitored.

All welds were nondestructively examined by radiographic methods. In addition, a supplemental ultrasonic examination was performed.

By meeting and/or exceeding the recommendation of the ASME Code, the intent of the regulatory guide is satisfied even though the design was significantly developed prior to issuance of the specific guide wording.

Specific Evaluation Reference:

See Section 5.2.3.

Similar Application Reference:

Similar application was used for LaSalle.

Regulatory Guide 1.53, Revision 0, June 1973

Application of the Single-Failure Criterion to Nuclear Power Plant Protection Systems

Regulatory Guide Intent:

Regulatory Guide 1.53 requires that protection systems meet the requirements of Section 4.2 of IEEE 279-1971, which is also required by ANSI-N 42.7-1972 in that any single failure within the protection systems shall not prevent proper protective action at the system level when required. This guide provides guidance on an acceptable method of complying with this requirement.

Application Assessment:

Assessed capability in design.

Compliance or Alternate Approach Statement:

Identified NSSS scope of supply analysis, design, and/or equipment used in this facility is in full compliance with this regulatory guide.

General Compliance or Alternate Approach Assessment:

Compliance is achieved by specifying, designing, and constructing the engineered safeguards systems to meet the single failure criterion, Section 4.2 of IEEE 279-1971, "Criteria for Protection Systems for Nuclear Power Generating Stations," and IEEE 379-1972, "IEEE Trial-Use Guide for the Application of the Single-Failure Criterion to Nuclear Power Generating Station Protection Systems."

This regulatory guide applies to the following NSSS supplied protection systems: reactor protection system (RPS), ECCS, and PCRVICS.

The reactor protection system has separate and redundant instrument channels, logic, and actuation circuits to ensure that the single failure criterion is met. The PCRVICS is similarly designed.

The ECCS is divided into the ADS, HPCS, LPCS and RHR (LPCI) which meets the single failure criterion on a network basis.

Specific Evaluation Reference:

See Sections 7.2.2.2 and 7.3.2.1.2.

Similar Application Reference:

Similar application was used for LaSalle.

Regulatory Guide 1.54, Revision 0, June 1973

Quality Assurance Requirements for Protective Coatings Applied to Water-Cooled Nuclear Power Plants.

Regulatory Guide Intent:

This guide describes an acceptable method of complying with QA requirements for protective coatings.

Application Assessment:

Assessed capability in design.

Compliance or Alternate Approach Statement:

The identified BWR Quality Assurance Program used in this facility reflects compliance with the provisions of NRC regulations and the NRC regulatory guide or NRC-approved alternate position.

General Compliance or Alternate Approach Assessment:

Reference compliance assessment for Regulatory Guide 1.28.

Specific Evaluation Reference:

Information was provided at the PSAR stage.

Similar Application Reference:

Similar application has not been used for other projects.

Regulatory Guide 1.56, Revision 0, June 1973

Maintenance of Water Purity in Boiling Water Reactors

Regulatory Guide Intent:

This guide describes an acceptable method of implementing GDC 13, 14, 15, and 31 with regard to minimizing the probability of corrosion-induced failure of the RCPB in BWRs by maintaining acceptable purity levels in the reactor coolant and acceptable instrumentation to determine the condition of the reactor coolant.

Application Assessment:

Assessed capability in design.

Compliance or Alternate Approach Statement:

Identified NSSS scope of supply analysis, design, and/or equipment used in this facility is in compliance with the intent of this regulatory guide through the incorporation of the alternate approach cited.

General Compliance or Alternate Approach Assessment:

Materials in the primary system are primarily Type 304 stainless steel and Zircaloy cladding. The reactor water chemistry limits have been established to provide an environment favorable to these materials. Design and Licensee Controlled Specifications (LCS) limits are placed on conductivity and chloride concentrations. Operationally, the conductivity is limited because it can be continuously and reliably measured and gives an indication of abnormal conditions and the presence of unusual materials in the coolant. Chloride limits are specified to prevent stress corrosion cracking of stainless steel.

The water quality requirements are further supported by GE topical report NEDO-10899.

Specific Evaluation Reference:

See Section 5.2.3.

Similar Application Reference:

Similar application was used for LaSalle.

Regulatory Guide 1.58, Revision 0, August 1973

Qualification of Nuclear Power Plant Inspection, Examination, and Testing Personnel

Regulatory Guide Intent:

This guide describes an acceptable method of complying with the NRC's regulations on qualification of nuclear power plant inspection, examination and testing personnel.

Application Assessment:

Assessed capability in design.

Compliance or Alternate Approach Statement:

The identified BWR Quality Assurance Program used in this facility reflects compliance with the provisions of NRC regulations and the NRC regulatory guide or NRC-approved alternate position.

General Compliance or Alternate Approach Assessment:

Reference compliance assessment for Regulatory Guide 1.28.

Specific Evaluation Reference:

Information was provided at the PSAR stage. Compliance is discussed in the OQAPD.

Similar Application Reference:

Similar application has not been used in other plants.

Regulatory Guide 1.60, Revision 1, December 1973

Design Response Spectra for Seismic Design of Nuclear Power Plants.

Regulatory Guide Intents:

This guide delineates procedures for defining response spectra for designing Seismic Category I structures, systems, and components.

Application Assessment:

Assessed capability in design.

Compliance or Alternate Approach Statement:

Identified NSSS scope of supply analysis, design, and/or equipment used in this facility is in compliance with the intent of this regulatory guide through the incorporation of the alternate approach cited.

General Compliance or Alternate Approach Assessment:

The input loadings for the seismic analysis of the CGS plant structures were given in terms of response spectra based on data available on earthquake acceleration time history records which was accepted industry practice at the time of the CGS design. This method was acceptable to the NRC prior to the issuance of this regulatory guide because no other guidance was available.

Specific Evaluation Reference:

See Section 3.7.1.1.

Similar Application Reference:

Similar application was used for LaSalle.

Regulatory Guide 1.61, Revision 0, October 1973

Damping Values for Seismic Design of Nuclear Power Plants

Regulatory Guide Intent:

This guide delineates damping values that should be applied to modal dynamic analysis of Seismic Category I elements.

Application Assessment:

Assessed capability in design.

Compliance or Alternate Approach Statement:

Identified NSSS scope of supply analysis, design, and/or equipment used in this facility is in compliance with the intent of this regulatory guide through the incorporation of the alternate approach cited.

General Compliance or Alternate Approach Assessment:

The damping values used in the seismic analysis conform to the data available on this at the time the analysis was performed which was the practice accepted by industry and the NRC at the time of the CGS design.

The values used in Table 3.7-1 are less than those given by the regulatory guide. The calculated responses are therefore conservative.

Specific Evaluation Reference:

See Section 3.7.1.3.

Similar Application Reference:

Similar application was used for LaSalle.

Regulatory Guide 1.62, Revision 0, October 1973

Manual Initiation of Protective Actions.

Regulatory Guide Intent:

Regulatory Guide 1.62 requires that manual initiation of each protective action at the system level be provided, that such initiation accomplishes all actions performed by automatic initiation, and that protective action at the system level go to completion once manually initiated. In addition, manual initiation should be by switches readily accessible in the control room, and a minimum of equipment should be used in common with automatically initiated protective action.

Application Assessment:

Assessed capability in design.

Compliance or Alternate Approach Statement:

Identified NSSS scope of supply analysis, design, and/or equipment used in this facility is in full compliance with this regulatory guide.

General Compliance or Alternate Approach Assessment:

Means are provided for manual initiation of primary containment and reactor vessel isolation control system (NSSS only), ECCS, and reactor protection system scram at the system level through the use of armed push buttons, as described below:

Action Initiated	Number of Switches
Primary containment and reactor vessel isolation (NSSS Only)	Four, two in Division 1 and two in Division 2
ADS	Four, two in Division 1 and two in Division 2
HPCS	One switch in Division 3
RHR (loop A)/LPCS	One switch in Division 1
RHR (loop B)/RHR (loop C)	One switch in Division 2
Reactor protection system (SCRAM)	Four, two in Division 1 and two in Division 2

Operation of these switches accomplishes the initiation of all actions performed by the automatic initiation circuitry.

The amount of equipment common to both manual and automatic initiation of the above function is kept to a minimum through implementation of manual activation as close as possible to the final devices actuators (relays, scram contractor) of the protection system. No failure in the manual, automatic or common portions of the protection system will prevent initiation of a given function by manual or automatic means.

Manual initiation of any of the above functions, once initiated, goes to completion as required by IEEE 279-1971, Section 4.16.

Specific Evaluation Reference:

See Sections 7.2.2.3 and 7.3.2.1.3.

Similar Application Reference:

Similar application has not been used for other projects.

Regulatory Guide 1.64, Revision 2, June 1976

Quality Assurance Requirements for the Design of Nuclear Power Plants

Regulatory Guide Intent:

This guide describes an acceptable method of complying with the NRC's QA requirements for the design of the nuclear power plants.

Application Assessment:

Assessed capability in design.

Compliance or Alternate Approach Statement:

The identified BWR Quality Assurance Program used in this facility reflects compliance with the provisions of NRC regulations and the NRC regulatory guide or NRC-approved alternate position.

General Compliance or Alternate Approach Assessment:

Reference compliance assessment for Regulatory Guide 1.28.

Specific Evaluation Reference:

Information was provided at the PSAR stage. Compliance is discussed in the OQAPD.

Similar Application Reference:

Similar application has not been used for other projects.

Regulatory Guide 1.65, Revision 0, October 1973

Materials and Inspection for Reactor Vessel Closure Studs.

Regulatory Guide Intent:

Regulatory Guide 1.65 defines acceptable materials and testing procedures with regard to reactor vessel closure stud bolting for light-water-cooled reactors.

Application Assessment:

Assessed capability in design.

Compliance or Alternate Approach Statement:

Identified NSSS scope of supply analysis, design, and/or equipment used in this facility is in compliance with the intent of this regulatory guide through the incorporation of the alternate approach cited.

General Compliance or Alternate Approach Assessment:

The reactor pressure vessel closure studs are SA-540 Grade B23 or 24 (AISI4340) and have a maximum ultimate tensile strength of 170 ksi. Additionally, specified bolting material must have Charpy V notch impact properties of 45 ft-lb minimum with 25 mils lateral expansion. Nondestructive examination before and after threading is specified to be in accordance with subarticle NB-2580 ASME Section III, which complies with regulatory position C.2. Subsequent to fabrication, the studs are manganese phosphate coated and are lubricated with a graphite/alcohol or a nickel powder base lubricant.

In relationship to regulatory position C.2.b, the bolting materials were ultrasonically examined after final heat treatment and prior to threading, as specified. The specified requirement for examination according to ASME Section II Recommended Practice SA-388 was complied with. The specific procedures approved for use in practice are judged to ensure comparable material quality and, moreover, are considered adequate on the basis of compliance with the applicable requirements of ASME Section III paragraph NB-2585.

Additionally, straight beam examination was performed on 100% of cylindrical surfaces, and from both ends of each stud using a 3/4 maximum diameter transducer. In addition to the code required notch, the reference standard for the radial scan contained a 0.5-in. diameter flat bottom hole with a depth of 10% of the thickness, and the end scan standard contained a 0.25-in. diameter flat bottom hole 0.5-in. deep. Also, angle beam examination was performed on the outer cylindrical surface of nuts

and washers per ASME SA-388 in both an axial and circumferential direction. Any indication greater than the indication from the applicable calibration feature is unacceptable. A distance-amplitude correction curve per NB-2585 is used for the longitudinal wave examination. Surface examinations were performed on the studs and nuts after final heat treatment and threading, as specified in the Regulatory Guide, in accordance with NB-2583 of ASME Code Section III, 1971 Edition through November 1971 Addenda.

In relationship to regulatory position C.3, GE practice allows exposure of stud bolting surfaces to high purity fill water; nuts and washers are stored dry during refueling.

In relationship to regulatory position C.4, ASME Section XI and Appendix VIII guidance is followed, as implemented in the In-Service Inspection Program, to monitor the structural integrity of the stud bolting and ability to perform their function.

Specific Evaluation Reference:

See Section 5.3.1.7.

Similar Application Reference:

Similar application was used for LaSalle.

Regulatory Guide 1.66, Revision 0, October 1973

Nondestructive Examination of Tubular Products.

Regulatory Guide Intent:

This guide describes a method of implementing requirements acceptable to NRC regarding nondestructive examination requirements of tubular products used in the RCPB.

Applicable Assessment:

Assessed capability in design.

Compliance or Alternate Approach Statement:

Identified NSSS scope of supply analysis, design, and/or equipment used in this facility is in compliance with the intent of this regulatory guide through the incorporation of the alternate approach cited.

General Compliance or Alternate Approach Assessment:

Wrought tubular products were supplied in accordance with applicable ASTM/ASME material specifications. These specifications require a hydrostatic test on each length of tubing. Additionally, the specification for the tubular product used for CRD housings specified ultrasonic examination to paragraph NB-2550 of ASME Code Section III.

These RCPB components met the requirements of ASME Codes existing at time of placement of order which predated Regulatory Guide 1.66. At the time of the placement of the orders, 10 CFR 50, Appendix B requirements and ASME code requirements assured adequate control of quality for the products.

This regulatory guide was withdrawn on September 28, 1977, by the NRC because the additional requirements imposed by the guide were satisfied by the ASME Code Section III.

Specific Evaluation Reference:

See Sections 4.5.2.3 and 5.2.3.3.

Similar Application Reference:

Similar application was used for LaSalle.

Regulatory Guide 1.67, Revision 0, October 1973

Installation of Overpressure Protection Devices

Regulatory Guide Intent:

This regulatory guide describes a method acceptable to the NRC staff for implementing GDC 1 with regard to the design of piping for safety valve and relief valve stations which have open discharge systems with limited discharge pipes and which have inlet piping that neither contains a water seal nor is subject to slug flow of water on discharge of the valves.

Application Assessment:

Assessed capability in design.

Compliance or Alternate Approach Statement:

Identified RHR shutdown suction line thermal relief piping is located between the containment isolation valves. However, the intent of the regulatory guide does not apply due to the very short duration and small discharge of the thermal relief function.

General Compliance or Alternate Approach Assessment:

This regulatory guide is not considered to be applicable to this piping due to the small size and very short operation time of the valve (0.75 in. x 1 in.). The only purpose of the valve is to relieve the excess pressure caused by the difference of thermal expansion between the pipe and the water contained between the containment isolation valves.

Specific Evaluation Reference:

See Section 3.9.3.1.14.

Similar Application Reference:

Not applicable.

Regulatory Guide 1.68, Revision 0, November 1973

Preoperational and Initial Startup Test Programs for Water-Cooled Power Reactors

Regulatory Guide Intent:

Regulatory Guide 1.68 describes the requirements for the initial startup test programs. This regulatory guide is applicable to such activities as precritical tests and low-power tests.

Application Assessment:

Assessed capability in design.

Compliance or Alternate Approach Statement:

Identified NSSS scope of supply analysis, design, and/or equipment used in this facility is in compliance with the intent of this regulatory guide through the incorporation of the alternate approach cited.

General Compliance or Alternate Approach Assessment:

The following discussion describes the alternate acceptable approaches for specific conformance to this regulatory guide.

The format of the CGS test procedures is different from that of the guide, but since the content specifies the required elements, the procedures are in compliance.

The reference sections refer to those of the regulatory guide. Those sections not listed are in compliance.

Section C.2.b: Operational limitations for the protection of public health and safety are included in the Technical Specifications for the plant. The General Electric startup instructions contain notes of caution which supplement the Technical Specifications. The Technical Specifications should be the instrument for describing operational (including testing) limitations. Therefore, the identification of "safety precautions" in test procedures should be limited to those items which, if not observed, could lead to reduction of system safety performance below expected levels and not the minor procedural and test details which would not cause such a reduction.

Section C.2.c: The generic simulation test appearing in Chapter 14 should appear by reference in preoperational and initial startup test programs where onsite full

simulation tests are not possible. The guide wording would change to "… less than full simulation should be provided or referenced for test where full…"

Appendix A, Section C.2.h: The comparison of critical control rod pattern with predicted patterns (Appendix A, Section C.2.d) provides required knowledge of effective overall rod worth. Individual control rod calibrations cannot be performed in a meaningful manner in a large multirodded BWR. Therefore, this part of the guide is not applicable to BWRs.

Appendix A, Section C.2.i: The functional requirement of the reactor head cooling system design is required at operating pressures less than or equal to 135 psig. Therefore, for this paragraph to be applicable "(135 psig)" should be part of last sentence.

Appendix A, Section D.2.a: The high-pressure coolant injection (HPCI) has been replaced by an HPCS system. Due to the configuration of the sprays directly on the core, this system cannot be operated at power. The HPCS injection/core spray is demonstrated during the preoperational test program.

Appendix A, Section D.2.b: Friction tests are performed on four drives at rates pressure.

Appendix A, Section D.2.f: It is necessary to make more than two calibrations and, therefore, it is not appropriate to limit the test to 50% and 100% power levels.

Appendix A, Section D.2.g: At least six chemical analyses of fluid system are necessary; therefore, the limitations of 25%, 50%, 75%, and 100% are not appropriate.

Appendix A, Section D.2.1: Since this plant design does not include an emergency condenser, this section is not appropriate.

Appendix A, Section D.2.n: Control rod calibration in a large multirodded BWR has not been found to provide meaningful data. Any safety-related problems associated with control rods would be discovered during safety related testing, and therefore, this section is not appropriate.

Appendix A, Section D.2.p: Since the main steam valve function tests are conducted at a minimum of six power and flow conditions, the limitations of 25%, 50%, and 75% are not appropriate.

Appendix A, Section D.2.s and t: Turbine trip and generator trip have essentially the same effect on the reactor and safety related system actuation. Sections D.2.s and D.2.t should be combined into one test.

Appendix A, Section D.2.y: Minimum critical heat flux ratio (MCHFR) is an obsolete limit that has been replaced with minimum critical power ratio (MCPR). Core performance evaluation tests must be performed at every test condition.

Appendix A, Section D.2.aa: Comparison tests are made throughout the test program, and therefore, limitations of 25%, 50% and 100% are not appropriate.

Appendix C, Section B.2.d: Functionally testing the associated control rod immediately following installation of each fuel cell is not appropriate. Functional testing of all control rods after fuel loading and prior to startup to critical procedures is applicable.

Appendix A, Section A.5.a: The "demonstration of water injection for a LOCA" is an ECCS test. Therefore, "demonstration of water injection for a loss-of-coolant accident" is not within the scope of the reactor coolant makeup system test.

Appendix A, Section C.2.c: The "calibration of intermediate range monitor with power" is not meaningful due to local control rod effects.

Appendix A, Section D.2.w: Feedwater pump trip should be performed to check recirculation pump runback.

Appendix C, Section B.1.b: Poison curtains are not applicable since they are not used in this plant.

Appendix C, Section B.2.a: Poison curtains are not applicable.

Appendix C, Section B.3.c: The insertion of locked control rods is excluded in any withdrawal sequence.

Appendix D, Section D.2.0: The rod pattern exchange is not a part of the Startup Power Ascension Program since it does not involve the approach of any safety margin or operating limit. The rod pattern exchange procedure at power is part of the Nuclear Performance Evaluation Procedure and will be performed during the fuel cycle as necessary. The simultaneous trip of both recirculation pumps is not performed at 100% of rated power. The analysis of this event (see Section 15.3.1) indicates there is no decrease in the MCPR and therefore, it does not involve the approach of any safety margin or operating limit.

Specific Evaluation Reference:

See Section 14.2.

Similar Application Reference:

Similar application was used for Brunswick 1 and Browns Ferry 3.

Regulatory Guide 1.70, Revision 2, September 1975

Standard Format and Content of Safety Analysis Reports for Nuclear Power Plants

Regulatory Guide Intent:

This guide describes the minimum acceptable requirements for format and content of Safety Analysis Reports.

Application Assessment:

Assessed capability in design.

Compliance or Alternate Approach Statement:

Identified NSSS scope of supply analysis, design, and/or equipment used in this facility is in full compliance with this regulatory guide or through the incorporation of the NRC approved alternate approach cited.

General Compliance or Alternate Approach Assessment:

The NSSS scope of supply inputs include all the appropriate scope responsibilities and information required in Regulatory Guide 1.70, Revision 2, in both format and content, except as described below. Appendix A of NEDE-24011-P-A, General Electric Standard Application for Reactor Fuel (GESTAR II) (most recent approved revision referenced in the COLR), provides a road map for incorporating nuclear fuel design and analysis characteristics described in GESTAR II into the FSAR. GESTAR II is consistent with Regulatory Guide 1.70, Revision 3.

Specific Evaluation Reference:

For Regulatory Guide 1.70, Revision 2, see NSSS scope of supply portions of this FSAR.

For Regulatory Guide 1.70, Revision 3, see Sections 4.1, 4.2, 4.3 and 4.4.

Similar Application Reference:

Similar application was used for Grand Gulf 1 and 2 and Susquehanna 1 and 2.

Regulatory Guide 1.71, Revision 0, December 1973

Welder Qualification for Areas of Limited Accessibility

Regulatory Guide Intent:

Regulatory Guide 1.71 requires that weld fabrication and repair for wrought low-alloy and high-alloy steels or other materials such as static and centrifugal castings and bimetallic joints should comply with fabrication requirements of Section III and Section IX of the ASME B&PV Code. It also requires additional performance qualifications for welding in areas of limited access.

Application Assessment:

Assessed capability in design.

Compliance or Alternate Approach Statement:

Identified NSSS scope of supply analysis, design, and/or equipment used in this facility is in compliance with the intent of this regulatory guide through the incorporation of the alternate approach cited.

General Compliance or Alternate Approach Assessment:

All ASME Section III welds were fabricated in accordance with the requirements of Section III and IX of the ASME B&PV Code. There are few restrictive welds involved in the fabrication of BWR components. Welder qualification for welds with the most restrictive access was accomplished by mock-up welding. Mock-ups were examined with radiography or sectioning.

All reactor pressure boundary welding was performed in accordance with ASME Section IX. Reactor internal component welding was performed in accordance with ASME Section IX or appropriate AWS requirements.

Specific Evaluation Reference:

See Section 5.2.3.

Similar Application Reference:

Similar application was used for Zimmer and LaSalle.

Regulatory Guide 1.73, Revision 0, January 1974

Qualification Tests of Electric Valve Operators Installed Inside the Containment of Nuclear Power Plants.

Regulatory Guide Intent:

Regulatory Guide 1.73 endorses the requirements of IEEE 382-1972, "Trial-Use Guide for Type Test of Class 1 Electric Valve Operators for Nuclear Power Generating Station." Regulatory position stipulations are also included.

Application Assessment:

Assessed capability in design.

Compliance or Alternate Approach Statement:

Identified NSSS scope of supply analysis, design, and/or equipment used in this facility is in full compliance with this regulatory guide.

General Compliance or Alternate Approach Assessment:

This regulatory guide is applicable to the recirculation system gate valve and the HPCS injection valve motor operators.

These valve operators have been tested in accordance with the test sequence outlined in Section 4.5.2 of the IEEE 382-1972. The qualifying tests have been made under environmental conditions (temperature, pressure, humidity, radiation) that are at least as severe as those that the valve operator will be exposed to during and following a DBA (LOCA).

Specific Evaluation Reference:

See Section 3.11.

Similar Application Reference:

Similar application was used for LaSalle.

Regulatory Guide 1.74, Revision 0, February 1974

Quality Assurance Terms and Definitions

Regulatory Guide Intent:

This guide identifies quality assurance terms and acceptable definitions.

Application Assessment;

Assessed capability in design.

Compliance or Alternate Approach Statement:

The identified BWR Quality Assurance Program used in this facility reflects compliance with the provisions of NRC regulations and the NRC regulatory guide or NRC-approved alternate position.

General Compliance or Alternate Approach Assessment:

Reference compliance assessment for Regulatory Guide 1.28.

Specific Evaluation Reference:

Information was provided at the PSAR stage. Compliance is discussed in the OQAPD.

Similar Application Reference:

Similar application has not been used for other projects.

Regulatory Guide 1.75, Revision 0, February 1974

Physical Independence of Electrical Systems

Regulatory Guide Intent:

This guide presents a detailed method of ensuring physical independence of electric systems, including requirements of preparation, identification, and isolation.

Application Assessment:

Assessed capability in design

Compliance or Alternate Approach Statement:

Identified NSSS scope of supply analysis, design, and/or equipment used in this facility is in compliance with the intent of this regulatory guide through the incorporation of the alternate approach cited.

General Compliance or Alternate Approach Assessment:

When evaluating the applicability of Regulatory Guide 1.75 and its attendant IEEE Standard (IEEE-384-1971), consideration should be given to the fact that design was significantly developed prior to their issuance.

The following is a point-by-point definition of the implementation of IEEE-384 as modified by Regulatory Guide 1.75 for the CGS plant. The numbers and titles in the following see those of IEEE-384.

1. Scope

   Compliance with scope.

2. Purpose

   Compliance with purpose.

3. Definitions

   All definitions apply including Regulatory Guide 1.75 except for small nomenclature aspects in C.1 and C.2 associated within floor sections.

4. General Separation Criteria

4.1 Required Separation

4.2 Equipment and Circuits Requiring Separation

The equipment and circuits requiring separation are determined and delineated early in the plant design. Distinctive identification of those equipment and circuits were not provided on specifically noted documents and drawings but the documents and drawings are identified as applying to the "protection systems."

4.3 Methods of Separation

Barriers are used to separate divisional devices and wiring. Safety system logic is implemented with relay coil to relay contact separation of multidivisional and nondivisional signals. Distance separation was provided to the extent feasible at manufacturing time. These served the purpose or intent of requirements at that time.

4.4 Compatibility with Mechanical Systems

The Class 1E equipment and circuits are specified to be located so that a failure in the mechanical systems served by the Class 1E systems does not disable redundant portions of the Class 1E systems.*

4.5 Associated Circuits

Associated circuits are treated as non-Class 1E circuits and are separated to the extent that good electrical isolation is assured. This assurance was provided without Class 1E isolators. Some physical separation is provided.

4.6 Non-Class 1E Circuits

4.6.1 Separation from Class 1E Circuits

Same as 4.5 response above.

* Information on compliance of actual installation is provided in Section 1.8.3.

4.6.2 Separation from Associated Circuits

Same as 4.5 response above.

5. Specific Separation Criteria

5.1 Cables and Raceways

To the extent that the 5.1 series of subparagraphs might be used to critique the power generation control complex (PGCC) equipment, the physical reality of the floor sections is obviously not recognized in the IEEE-384 test. However, the floor sections are inherently in accordance with the design concepts stated in these subparagraphs and therefore comply on that basis.

5.2 Standby Power Supply

Comply as applied to the Division 3 HPCS Diesel Generator.*

5.3 DC System

Comply as applied to the Division 3 HPCS Diesel Generator.*

5.4 Distribution System

Comply as applied to the Division 3 HPCS Diesel Generator.*

5.5 Containment Electrical Penetrations

Not in NSSS scope of supply.

5.6 Control Switch Boards

5.6.1 Location and Arrangement†

Class 1E equipment and circuits are located on separate control switchboards or where operationally necessary on a single control switchboard.

* Division 1 and 2 power compliance is provided in Section 1.8.3.
† The control room structure and location as well as local control switchboard location is discussed in Section 1.8.3.

5.6.2 Internal Separation

Most of the devices requiring separation are separated by barriers. With several divisions in one panel, and for relays which must accept multidivisional signals, 6-inch separation is impossible. Therefore, separation is done on a best effort approach. Design has used the relay coil to relay contact separation to comply with the regulatory guide.

5.6.3 Internal Wiring Identification

Panel internals wiring is not color-coded, but wires are marked with their respective Connection Diagram identify at each point of termination.

5.6.4 Common Terminations

Relay coil to relay contact separation has been used.

5.6.5 Non-Class 1E Wiring

Electrical isolation is provided, though not necessarily with Class 1E isolators. Some physical separation is provided.

5.6.6 Cable Entrance

Not in NSSS scope of supply.

5.7 Instrumentation Cabinets

Compliance

5.8 Sensors and Sensor to Process Connections

Compliance

5.9 Actuated Equipment

Not in NSSS scope of supply.

Specific Evaluation Reference:

See Section 8.3.1.4.2.7

Similar Application Reference:

Application of this regulatory guide is plant unique due to NRC agreements during the various stages of licensing and scope of responsibility of design and engineering necessary to comply with the NRC interpretation. Therefore reference plants cannot be cited.

Regulatory Guide 1.84

Design, Fabrication, and Materials Code Case Acceptability, ASME Section III

Regulatory Guide Intent:

This guide lists all Section III Code Cases that the NRC has approved for use. It is updated on a regular basis to reflect the changes to the ASME Code Cases and the current position of the NRC on acceptability for use. The guide contains tables that detail the NRC acceptance requirements for current, annulled, and superseded Code Cases. Code Cases that the NRC determined to be unacceptable are listed in Regulatory Guide 1.193, "ASME Code Cases Not Approved for Use".

Application Assessment:

Assessed capability in design.

Compliance or Alternate Approach Statement:

The current version of the Regulatory Guide is utilized to determine acceptable Code Cases for all new and existing plant applications. The FSAR does not track individual Code Cases and revision numbers. Not all acceptable Code Cases listed in the regulatory guide are used. The Code Cases that are utilized for Columbia are referred to in the plant design/installation documentation.

General Compliance or Alternate Approach Assessment:

Code Cases are utilized in accordance with the requirements of the regulatory guide provisions for acceptance. Section III Code Cases that are not yet endorsed may be utilized via submittal to the NRC for approval in accordance with the regulatory guide. The plant scope of supply is in full compliance with this regulatory guide.

Specific Evaluation Reference:

See Section 3.2.

Similar Application Reference:

None.

Regulatory Guide 1.85, Revision 31, 1998*

Code Case Acceptability ASME Section III Materials

Regulatory Guide Intent:

This guide provides a list of ASME materials code cases that have been generically approved by the NRC.

Code cases on this list may be used until annulled. Annulled cases are considered "active" for equipment that has been contractually committed to fabrication prior to the annulment.

This guide and later revisions require NRC approval of code cases for Class 1, 2, and 3 components.

Application Assessment:

Assessed capability in design.

Compliance or Alternate Approach Statement:

Identified NSSS scope of supply analysis, design, and/or equipment used in this facility is in compliance with the intent of this regulatory guide through the incorporation of the alternate approach cited.

General Compliance or Alternate Approach Assessment:

The GE procedure is to obtain NRC approval of code cases on Class 1 components only. NRC approval of Class 2 and 3 code cases was not required by 10 CFR 50.55(a).

All Class 2 and 3 equipment has been designed to ASME Code or ASME approved Code Cases. This provision together with quality control requirements provide adequate safety equipment functional assurances.

Specific Evaluation Reference:

See Section 5.2.1.

* Regulatory Guide 1.85 was withdrawn in 2004. See Regulatory Guide 1.84 for NRC acceptance of current Materials Code Cases.

Similar Application Reference;

Similar application was used for LaSalle.

Regulatory Guide 1.88, Revision 2, October 1976

Collection, Storage, and Maintenance of Nuclear Power Plant Quality Assurance Records.

Regulatory Guide Intent:

This guide describes an acceptable method of complying with the NRC's regulations for collection, storage, and maintenance of quality assurance records.

Application Assessment:

Assessed capability in design.

Compliance or Alternate Approach Statement:

The identified BWR Quality Assurance Program used in this facility reflects compliance with the provisions of NRC regulations and the regulatory guide or NRC-approved alternate position.

General Compliance or Alternate Approach Assessment:

Reference compliance assessment for Regulatory Guide 1.28.

Specific Evaluation Reference:

Information was provided at the PSAR stage. Compliance is discussed in the OQAPD.

Similar Application Reference:

Similar application has not been used for other projects.

Regulatory Guide 1.89, Revision 1, June 1984

Qualification of Class 1E Equipment for Nuclear Power Plants

Regulatory Guide Intent:

Regulatory Guide 1.89 Rev. 1 endorses both the requirements and recommendations of IEEE 323-1974, "IEEE Standard for Qualifying Class 1E Equipment for Nuclear Power Generating Stations." Additional regulatory position stipulations are also included.

Compliance or Alternate Approach Statement:

CGS complies with this regulatory guide for equipment requiring environmental qualification procured after February 22, 1983.

General Compliance or Alternate Approach Assessment:

For equipment requiring environmental qualification installed prior to February 22, 1983, CGS follows the guidance in NUREG-0588 Cat II.

In view of the NRC Memorandum and Order (CLI-80-21), dated May 23, 1980, all environmental qualifications of Class 1E equipment within the NSSS scope of supply was reevaluated for compliance with NUREG-0588, Category II. Where significant deviation from those guidelines was found in specific equipment qualifications, additional testing and/or analysis was performed to demonstrate the adequacy of the equipment to perform its safety-related function.

Specific Evaluation Reference:

Delineation of the degree of compliance is contained in Section 3.11.

Regulatory Guide 1.92, Revision 1, February 1976

Combination of Modes and Spatial Components in Seismic Response Analysis.

Regulatory Guide Intent:

This guide describes methods acceptable to the NRC for combining the values of the response spectrum nodal dynamic analysis and in combining maximum values (in case of time history dynamic analysis) or the representative maximum values (in case of spectrum dynamic analysis).

Application Assessment:

Assessed capability in design.

Compliance or Alternate Approach Statement:

Identified NSSS scope of supply analysis, design, and/or equipment used in this facility is in compliance with the intent of this regulatory guide through the incorporation of the alternate approach cited.

General Compliance or Alternate Approach Assessment:

Three Components of Earthquake Motion

Response Spectrum Method

The use of three components of earthquake motion was not a design basis requirement of the construction permit for this plant. The total seismic response is predicted by combining the response calculated from analyses due to one horizontal and one vertical seismic input. For this case, where the response spectrum method of seismic analysis is used, the basis for combining the loads from the two analyses is given as follows:

a. The peak of the different modes for the same earthquake excitations do not occur at the same time,

b. The peak responses of a particular mode due to earthquake excitations from different directions do not occur at the same time, and

c. The peak stresses due to different modes and due to different excitations may not occur at the same location nor in the same direction.

To implement the above, the two translation components of earthquake excitations are combined by summing the absolute sum of all responses of interest (e.g., strain, displacement stress, moment, shear, etc.) from seismic motion, the one horizontal (x or z) and one vertical direction (y), i.e., $|x+y|$ or $|y+z|$. The design is made for the larger of the two sums $|x+y|$ or $|y+z|$.

Time History Method

The algebraic sum of contributions (to displacements, loads, stresses, etc.) due to the two earthquake components are calculated for each natural mode for each time interval of analysis. The time interval should be less than or equal to 0.2 of the smallest period of interest. The maximum values of all time intervals are the design displacements, accelerations, loads, or stresses.

It is concluded that the above method adequately demonstrates the integrity of the Seismic Category I subsystems and was found acceptable as a basis of current operating BWR plants.

Combination of Modal Responses

When the response spectra method of modal analysis is used, all modes are combined by the square root of the sum of the squares (SRSS) described as follows:

The SRSS combination of modal responses is defined mathematically as

$$R = \sqrt{\sum_{i=1}^{n} (R_i)^2}$$

where

R = Combined response

R_i = Response in the ith mode

n = Number of modes considered in the analysis

Closely spaced modes are not accounted for as required by the guide because the design was significantly developed prior to issuance of the guide.

Specific Evaluation Reference:

See Sections 3.7.3.6 and 3.7.3.7.

Similar Application Reference:

Similar application was used for LaSalle.

Regulatory Guide 1.99, Revision 2, May 1988

Radiation Embrittlement of Reactor Vessel Materials

Regulatory Guide Intent:

This regulatory guide provides guidance for the prediction of irradiation damage of the reactor vessel belt line materials for the life of the vessel. This information is used to develop the pressure/temperature limit curves for the reactor pressure vessel based on material chemistry and end-of-life neutron exposure.

Application Assessment:

Assessed capability in design.

Compliance or Alternate Approach Statement:

The reactor pressure vessel pressure/temperature limit curves are in full compliance with the identified requirements in the regulatory guide.

General Compliance or Alternate Assessment:

Compliance is achieved by using a calculated end-of-life fluence for the CGS reactor vessel to evaluate the material damage due to this fluence. This information is used to predict the end-of-life NDT temperature for the limiting belt line material for the vessel. Using linear elastic fracture mechanics, the requirements of Welding Research Council Bulletin 175, the Standard Review Plan, and the requirements of Regulatory Guide 1.99, Revision 2, the pressure/temperature limit curves were developed for CGS. These curves will be used to evaluate the predictions determined by the regulatory guide until the submittal of new curves that incorporate the results of the surveillance capsule test data.

Specific Evaluation Reference:

See Sections 5.3.1.5.2.1 through 5.3.1.5.2.6 and the Technical Specifications.

Similar Application Reference:

Similar application is used on all reactor vessels.

Regulatory Guide 1.100, Revision 1, August 1977

Seismic Qualification of Electric Equipment for Nuclear Power Plants

Regulatory Guide Intent:

Regulatory Guide 1.100 endorses both the requirements and recommendations of IEEE 344-1975, "IEEE Recommended Practices for Seismic Qualification of Class 1E Equipment for Nuclear Power Generating Stations," when such qualification is performed in conjunction with Regulatory Guide 1.89, and subject to the regulatory position stipulations.

Compliance or Alternate Approach Statement:

General Compliance or Alternate Approach Assessment:

All Class 1E equipment seismic qualifications are evaluated against the requirements set forth within IEEE 344-1975 as clarified in Section 3.10.1.2. The evaluations are documented and demonstrated adequacy of the methods and results of the qualifications as equal or conservative to the requirements of IEEE 344-1975. This qualification documentation includes evaluation of seismic and hydrodynamic load combinations.

Specific Evaluation Reference:

See Section 3.10 and *"WNP-2 Dynamic Qualification Report for Safety-Related Equipment," dated September 1982*.

Regulatory Guide 1.145, Revision 1, November 1982/February 1983

Atmospheric Dispersion Models for Potential Accident Consequence Assessments at Nuclear Power Plants

Regulatory Guide Intent

This guide provides acceptable methodology to determining site-specific off-site air dispersion factors (χ/Q) for assessing the potential offsite radiological consequences of postulated accidental releases of radioactive material to the atmosphere.

Application Assessment

Assessed capability in design.

Compliance or Alternate Approach Statement:

Identified NSSS scope of supply analysis, design, and equipment used in this facility is in full compliance with the regulatory guide.

General Compliance or Alternate Approach Assessment

Two of the procedures contained in the PAVAN code were implemented. The procedures were run with the desert sigma and with the Pasquill-Gifford sigma enabled. The most conservative χ/Q values were used in the accident analysis.

Specific Evaluation Reference:

See Section 2.3 and Chapter 15.0.

Regulatory Guide 1.183, Revision 0, July 2000

Alternative Radiological Source Terms For Evaluating Design Basis Accidents At Nuclear Power Reactors

Regulatory Guide Intent:

This guide provides guidance to licensees of operating power reactors on acceptable applications of alternative source terms; the scope, nature, and documentation of associated analyses and evaluations; consideration of impacts on analyzed risk; and content of submittals. This guide establishes an acceptable alternative source term (AST) and identifies the significant attributes of other ASTs that may be found acceptable by the NRC staff. This guide also identifies acceptable radiological analysis assumptions for use in conjunction with the accepted AST.

Application Assessment:

Assessed capability in design.

Compliance or Alternate Approach Statement:

Identified NSSS scope of supply analysis, design, and equipment used in this facility is in compliance with this regulatory guide or through the incorporation of the NRC approved alternate approach cited.

General Compliance or Alternate Approach Assessment:

This regulatory guide is applicable to the analyses for the FSAR. The Columbia analysis methods and assumptions (see Energy Northwest, "Columbia Generating Station Alternative Source Term," CGS-FTS-0168, Revision 0, August 2007) conform to position of this Regulatory Guide with the following specific considerations.

[Guide Section 3.4] Table 5 of the regulatory guide lists the elements in each radionuclide group that should be considered in design basis analyses. The intent of the guidance is met by an alternate approach. The Columbia analyses consider 66 nuclides consisting of 60 identified as being potentially important contributors to TEDE in NUREG/CR-4691 plus seven additional noble gas isotopes and Ba-137m.

[Guide Section 4.3] Columbia conforms with guide section 4.3 with the exception that the TID-14844 source term continues to be used as the radiation dose basis for equipment qualification.

[Guide Section 3.3 of Appendix A] The intent of the guidance is met by the conservative approach used in the Columbia analysis. The SRP 6.5.2 model is used. Elemental iodine is assumed to be removed at the same rate as particulate. The approach of treating elemental iodine as particulate is a conservative representation of the situation in which some elemental iodine would be removed by diffusion to spray water droplets and some elemental iodine would adsorb onto particulate. A reduction of 10 in iodine removal lambda is taken when 98% of the particulate has been removed. The method results in a conservative dose.

Specific Evaluation Reference:

See Chapter 15.4.9, 15.6.4, 15.6.5, 15.7.4.

Similar Application Reference:

Similar application was used for Grand Gulf and Brunswick.

Regulatory Guide 1.190, Revision 0, March 2001

Calculational and Dosimetry Methods for Determining Pressure Vessel Neutron Fluence

Regulatory Guide Intent:

This Regulatory Guide has been developed to provide state-of-the-art calculations and measurement procedures that are acceptable to the NRC staff for determining pressure vessel fluence.

Application Assessment:

Assessed capability in design.

Compliance or Alternate Approach Statement:

The methodology for the neutron flux calculation for the CGS reactor vessel conforms to Licensing Topical Report (LTR) NEDC-32983-P-A. In general, the methodology described in the LTR adheres to the guidance in Regulatory Guide 1.190 for neutron flux evaluation and was approved by the U.S. NRC in the Safety Evaluation Report (SER) for referencing in Licensing submittals.

General Compliance or Alternate Assessment:

Reference compliance assessment for Regulatory Guide 1.99.

Specific Evaluation Reference:

See Section 4.3.2.8.

Similar Application Reference:

Similar application is used for Browns Ferry Nuclear Plant, Units 2 and 3, reactor vessels.

Regulatory Guide 1.194, Revision 0, June 2003

Atmospheric Relative Concentrations for Control Room Radiological Habitability Assessments at Nuclear Power Plants

Regulatory Guide Intent:

This guide provides guidance on determining atmospheric relative concentrations (χ/Q) values in support of design basis control room radiological habitability assessments at nuclear power plants. This guide describes methods acceptable to the NRC staff for determining χ/Q values that will be used in control room radiological habitability assessments performed in support of applications for licenses and license amendment requests.

Application Assessment:

Assessed capability in design.

Compliance or Alternate Approach Statement:

Identified NSSS scope of supply analysis, design, and equipment used in this facility is in compliance with this regulatory guide or through the incorporation of the NRC approved alternate approach cited.

General Compliance or Alternate Approach Assessment:

This regulatory guide is applicable to the analyses for the FSAR. The Instantaneous Puff Release alternative method provided by this guide is used to calculate χ/Q for the Main Steam Line Break accident.

Specific Evaluation Reference:

See Section 15.6.4.

Similar Application Reference:

1.8.3 BALANCE OF PLANT SCOPE OF SUPPLY EVALUATION

The following evaluations of implementation of regulatory guides are relative to BOP scope of supply. Thus, reference to CGS in the following evaluations is restricted to the BOP scope of supply portions of CGS. For NSSS scope of supply implementation of regulatory guides, see Section 1.8.2.

Conformance to the regulatory guides falls under either of the two following categories:

a. Compliance with the guidance set forth in this regulatory guide as described in this FSAR or

b. Compliance with the intent of the guidance set forth in this regulatory guide by an alternate approach.

The second category is based on NRC rules which state:

> Regulatory guides are not substitutes for regulations, and compliance with them is not required. Methods and solutions different from those set out in the guides will be acceptable if they provide a basis for the findings requisite to the assurance or continuance of a permit or license by the NRC.

Regulatory guides and their revisions are addressed in the following.

Regulatory Guide 1.6, Revision 0, March 1971

Independence Between Redundant Standby (Onsite) Power Sources and Between Their Distribution Systems

Compliance or Alternate Approach Statement:

CGS complies with the guidance set forth in this regulatory guide.

General Compliance or Alternate Approach Assessment:

The compliance assessments given below correspond numerically to the Regulatory Positions as enumerated in Section C of Regulatory Guide 1.6, Revision 0.

1. The electrically powered safety loads, both ac and dc, are separated into redundant load groups such that loss of any one group will not prevent the minimum safety function from being performed.

2. Each ac load group has a connection to the preferred offsite power source and to a standby onsite power source. The standby power sources have no automatic connection to any other redundant load groups.

3. Each dc load group is energized by a battery and battery charger. The battery-charger combination has no automatic connection to any other redundant dc load group.

4. When operating from the standby sources, redundant load groups and the redundant standby sources are independent of each other.

5. A single generator driven by two prime movers in tandem is the standby power source for the Division 1 and 2 ac load groups. The Division 3 ac load group power is supplied by a single generator driven by a single prime mover.

Specific Evaluation Reference:

See Sections 8.1.5.2, 8.3.1.1.7, 8.3.1.2.1.3, 8.3.1.2.1.4, 8.3.1.3, 8.3.1.4, 8.3.2.1.1, 8.3.2.2.1.2, 8.3.2.3, and 8.3.2.4.

Regulatory Guide 1.8, Rev. 1-R (May 1977)

Personnel Selection and Training

Compliance or Alternate Approach Statement:

CGS complies with the guidance set forth in this regulatory guide.

General Compliance or Alternate Approach Assessment:

The Regulatory Position of Regulatory Guide 1.8, Rev. 1-R (May 1977) will be implemented.

Specific Evaluation Reference:

See Sections 13.1.3, 13.2.1, and the OQAPD.

Regulatory Guide 1.9, Revision 0, March 1971

Selection of Diesel Generator Set Capacity for Standby Power Supplies.

Compliance or Alternate Approach Statement:

CGS complies with the guidance set forth in this regulatory guide.

General Compliance or Alternate Approach Assessment:

The compliance assessments given below correspond numerically to the regulatory positions as enumerated in Section C of Regulatory Guide 1.9, Revision 0.

1. Both the Division 1 and Division 2 diesel generator sets were selected to have a continuous load rating equal to or greater than the sum of the conservative estimated loads needed to be powered at any one time.

2. The predicted loads on both the Division 1 and the Division 2 diesel generator sets do not exceed the 2000-hr rating of either set, respectively, or 90% of the 30-minute rating of either set, respectively.

3. Predicted loads on Division 1 and Division 2 were verified by tests during preoperational testing.

4. The Division 1 and Division 2 diesel generator sets are capable of starting and accelerating to rated speed, in the required sequence, all the needed engineered safety feature and emergency shutdown loads.

   The Division 1 and Division 2 diesel generator sets are within the limits of undervoltage, under-frequency, overspeed and voltage and frequency restoration time limits, set forth in the regulatory guide.

5. The suitability of each diesel generator set of the standby power supply was confirmed by prototype qualification test data and preoperational tests.

The scope of Regulatory Guide 1.9, Revision 0 does not include recommendations for surveillance testing. The surveillance requirements for demonstrating the operability of the diesel generators are consistent with the recommendations of Regulatory Guide 1.9 Revision 3 as described in the Bases for Technical Specification B 3.8.1. Additionally, periodic testing of all diesel generators is accomplished at intervals specified in the Technical Specifications (TS) which are controlled under the Surveillance Frequency Control Program (SFCP). Compliance with Regulatory Guide 1.9 Rev. 0, as an acceptable basis for the selection of diesel generator sets of sufficient margin to implement General Design Criterion 17, remains as described herein.

Specific Evaluation References:

See Sections 8.1.5.2, 8.3.1.1.7, and 8.3.1.2.1.3.

Regulatory Guide 1.10, Revision 1, January 1973

Mechanical (Cadweld) Splices in Reinforced Bars of Category I Concrete Structures.

Compliance or Alternate Approach Statement:

CGS complies with the guidance set forth in this regulatory guide.

General Compliance or Alternate Approach Assessment:

The requirements of the guide have been included in the appropriate specifications for the project construction. Compliance with the guide is ensured by testing and control procedures and reporting program. The program includes splicing crew qualifications, visual inspection of each splice, tensile testing of splice samples, tensile test frequency program, and a procedure for evaluating substandard test results. The procedure for testing and sampling of mechanical splices have been implemented.

Specific Evaluation Reference:

See Sections 3.8.3.2 and 3.8.4.2 and Table 3.8-4.

Regulatory Guide 1.11, Revision 0, March 1971

Instrument Lines Penetrating Primary Reactor Containment.

Compliance or Alternate Approach Statement:

CGS complies with the guidance set forth in this regulatory guide.

General Compliance or Alternate Approach Assessment:

CGS design includes flow restriction orifices and/or excess flow check valves with position indication in instrument lines which penetrate primary reactor containment. In the event of an instrument line rupture outside primary containment, the integrity and functional performance of the secondary containment system and its associated filtration systems are maintained.

Specific Evaluation Reference:

See Sections 7.1.2.4 and 6.2.4.

Regulatory Guide 1.12, Revision 2, March 1997

Instrumentation for Earthquakes

Compliance or Alternate Approach Statement:

CGS complies with the guidance set forth in this regulatory guide.

General Compliance or Alternate Approach Assessment:

Triaxial strong-motion accelerographs are installed at appropriate locations to provide data on the seismic input to the free field area, containment; data on frequency, amplitude, and phase relationship of the seismic response of the containment structure; and data on the seismic input to other Category I structures, systems, and components.

Specific Evaluation Reference:

See Section 3.7.4.

Note: While RG 1.12, Rev 2 is designed to meet 10 CFR 50, Appendix S, CGS is using it as an alternative method of complying with seismic requirements applicable to CGS, namely 10 CFR 100, Appendix A.

Regulatory Guide 1.13, Revision 1, December 1975

Spent Fuel Storage Facility Design Basis

Compliance or Alternate Approach Statement:

CGS complies with the intent of the guidance set forth in this regulatory guide by an alternate approach.

General Compliance or Alternate Approach Assessment:

A controlled leakage building is provided enclosing the fuel pool. The building is not designed to withstand extremely high winds, but leakage is suitably controlled during refueling operations. The building is equipped with a ventilation and filtration system which is designed to limit the potential consequences of the release of radioactivity specified in Regulatory Guide 1.183 to those requirements set forth in 10 CFR 50.67.

The movement paths of heavy objects such as the reactor pressure vessel head, containment vessel head, and the spent fuel cask are designed not to pass over the spent fuel racks. Furthermore, the reactor building crane and its auxiliary hoist are prevented by means of interlocks from passing over any of the spent fuel pool except the spent fuel cask area. Bypassing of the interlocks is permitted only during fuel handling and storage operations and is administratively controlled.

The fuel pool is designed so that no pipe break will drain water from the fuel pool.

Specific Evaluation Reference:

See Section 9.1.

Regulatory Guide 1.15, Revision 1, December 1972

Testing of Reinforcing Bars for Category I Concrete Structures

Compliance or Alternate Approach Statement:

CGS complies with the guidance set forth in this regulatory guide.

General Compliance or Alternate Approach Assessment:

The requirements of the guide have been included in the appropriate specifications for project construction. Compliance with the guide is assured by the implementation of qualified testing and control procedures and reporting. Included are qualified control procedures and reporting for the yield strength and tensile strength tests and deformation inspections recommended by the guide.

Specific Evaluation Reference:

See Sections 3.8.3.2, 3.8.4.2, and 3.8.5.2 and Table 3.8-4.

Regulatory Guide 1.16, Revision 4, August 1975

Reporting of Operating Information - Appendix A Technical Specifications

Compliance or Alternate Approach Statement:

This regulatory guide was withdrawn in August 2009 and is no longer applicable.

General Compliance or Alternate Approach Assessment:

Not applicable.

Specific Evaluation Reference:

Not applicable.

Regulatory Guide 1.17, Revision 1, June 1973

Protection of Nuclear Power Plants Against Industrial Sabotage

Compliance or Alternate Approach Statement:

CGS complies with the guidance set forth in this regulatory guide.

General Compliance or Alternate Approach Assessment:

This information is considered proprietary and is subject to limited distribution. All specifics have been forwarded to the NRC as part of the Energy Northwest proprietary physical security plan for CGS.

Specific Evaluation Reference:

See proprietary physical security plan.

Regulatory Guide 1.18, Revision 1, December 1972.

Structural Acceptance Test for Concrete Primary Reactor Containments

Compliance or Alternate Approach Statement:

This regulatory guide is not applicable since CGS does not have a concrete primary containment.

General Compliance or Alternate Approach Assessment:

Not applicable.

Specific Evaluation Reference:

Not applicable.

Regulatory Guide 1.19, Revision 1, August 1972

Nondestructive Examination of Primary Containment Liner Welds

Compliance or Alternate Approach Statement:

This regulatory guide is not applicable since CGS does not have a concrete primary containment with a steel liner.

General Compliance or Alternate Approach Assessment:

Not applicable.

Specific Evaluation Reference:

Not applicable.

Regulatory Guide 1.21, Revision 1, June 1974

Measuring, Evaluating, and Reporting of Radioactivity in Solid Wastes and Releases of Radioactive Materials in Liquid and Gaseous Effluents from Light-Water-Cooled Nuclear Power Plants

Compliance or Alternate Approach Statement:

CGS complies with the intent of the guidance established in this regulatory guide by an alternate approach.

General Compliance or Alternate Approach Assessment:

The following categories of monitoring systems incorporated into the CGS design fulfill the requirements for monitoring in Regulatory Guide 1.21.

a. Gaseous effluents,
b. Liquid effluents, and
c. Solid Waste.

The above categories of monitoring systems adequately monitor effluent discharge paths for radioactivity that may be released from normal operations, including anticipated operational occurrences, and from postulated accidents.

Columbia Generating Station complies with Section C.11.b (Quality Controls) requirements for blind duplicate analysis by an alternate approach. An intralaboratory blind sample program is performed on selected samples. The blinds are prepared from samples sent from a cross check laboratory and split between several analysts as determined by the Chemistry Operations Supervisor or designee. This process allows evaluation of individual analysts' performance while at the same time satisfying the blind duplicate and cross check laboratory requirements.

Section C.11.c (Calibrations) suggests that appropriate standards be used to calibrate continuous radioactivity monitors and that the relationship be established between monitor readings and concentration over the full range of the readout device. In those cases where mixed fission gases or corrosion and activation products are not available, vendor instrument performance data or calculations will be used. Subsequent inservice calibrations will be performed using the specific radionuclide analytical results from grab samples taken from the effluent release path.

Appendix A, Section A.3.a (1) and Section A.3.a (3), analytical frequencies are not consistent with standard sampling and analytical techniques. Improved sensitivities and

more realistic quantity measurements can be made by performing ^{140}Ba-La, $^{89\text{-}90}$Sr, and gross alpha measurements on a monthly composite sample of weekly samples.

Exception is taken to the Appendix A, Section B.1.c, requirement for a special sample and analysis of one liquid waste batch per month for entrained fission and activation gases. The gamma spectrum analysis performed prior to the release of any waste liquid batch will identify such gases without performing a separate or special analysis.

The sensitivity slated in Appendix A, Section B.3, for gamma-emitting radionuclides (5×10^{-7} µCi/ml) will be applied in the case of principal gamma-emitting nuclides.

Specific Evaluation Reference:

See Section 11.5.

Regulatory Guide 1.22, Revision 0, February 1972

Periodic Testing of Protection System Actuation Functions

Compliance or Alternate Approach Statement:

CGS complies with the guidance set forth in this regulatory guide.

General Compliance or Alternate Approach Assessment:

The CGS protection system and the systems whose operation it initiates are designed to permit periodic testing of the actuation devices during reactor operation. The periodic tests will duplicate, as closely as practical, the performance that is required of the actuation devices in the event of an accident. The tests will be performed in overlapping portions so that an actual reactor scram will not occur as a result of the testing.

Specific Evaluation Reference:

See Section 7.3.2.1.3.

Regulatory Guide 1.23, Revision 0, February 1972

Onsite Meteorological Program

Compliance or Alternate Approach Statement:

CGS complies with the guidance set forth in this regulatory guide.

Where conflicts exist between the recommendations specified in Regulatory Guide 1.23, Revision 0 and those recommended in Regulatory Guide 1.97, Revision 2, the Columbia Generating Station will comply with the recommendations of Regulatory Guide 1.97, Revision 2 unless noted in the text discussions as meeting Regulatory Guide 1.97, Revision 3 requirements (see Section 7.5.2.2.3).

General Compliance or Alternate Approach Assessment:

The requirements of this regulatory guide for a meteorological program to provide the meteorological data required to estimate potential radiation doses to the public have been and are being implemented for CGS.

Specific Evaluation Reference:

See Sections 2.3.2, 2.3.3, 7.7.1, and the Emergency Plan.

Regulatory Guide 1.26, Revision 3, February 1976

Quality Group Classifications and Standards for Water-, Steam-, and Radioactive-Waste Containing Components of Nuclear Power Plants

Compliance or Alternate Approach Statement:

CGS complies with the guidance set forth in this regulatory guide.

General Compliance or Alternate Approach Assessment:

The definition of quality group classifications for CGS was provided in the PSAR in accordance with ASME B&PV Code, Sections III and VIII. Quality group classifications have been maintained during design and construction. Quality group classifications are maintained during plant operations and modifications by plant administrative procedures and the plant modification control process. The quality group classifications are commensurate with the safety functions performed by the safety-related components.

The turbine stop valves and bypass valve, which are classified Quality Group D, are subject to an enhanced quality assurance program comparable to that of Quality Group B.

Specific Evaluation Reference:

See Section 3.2.

Regulatory Guide 1.27, Revision 2, January 1976

Ultimate Heat Sink for Nuclear Power Plants

Compliance or Alternate Approach Statement:

CGS complies with the guidance set forth in this regulatory guide.

General Compliance or Alternate Approach Assessment:

Energy Northwest complies with Regulatory Guide 1.27, Revision 2, without any exceptions and with one clarification.

The clarification is that the tower makeup system (TMU) water supply is only an ultimate heat sink feature in the event of a design basis tornado. Since Regulatory Guide 1.27 states that we need not consider two or more most severe natural phenomena occurring simultaneously, the TMU was designed to be tornado proof but was not designed and constructed to withstand the effects of the operating basis earthquake (OBE) and water flow based on severe historical events in the region.

Specific Assessment Reference:

See Section 9.2.5.

Regulatory Guide 1.28, Revision 0, June 1972

Quality Assurance Program Requirements (Design and Construction)

Compliance or Alternate Approach Statement:

CGS *complies with the guidance set forth in this regulatory guide as described below.*

General Compliance or Alternate Approach Assessment:

Procurement documents issued after November 1973 required compliance with ANSI N45.2. Prior to that time, an "explanative version" of 10 CFR 50 Appendix B was used. The design and construction activities initially complied with 10 CFR 50 Appendix B. In November 1974, reference to ANSI N45.2 was added to the construction specifications.

ANSI N45.2 does not apply to the activities covered by Section III and Section XI of the ASME Code; however, the quality assurance program requirements may be extended to these activities based on project requirements.

Specific Evaluation Reference:

None

Regulatory Guide 1.29, Revision 3, September 1978

Seismic Design Classification

Compliance or Alternate Approach Statement:

CGS complies with the intent of the guidance set forth in this regulatory guide by an alternate approach.

General Compliance or Alternate Approach Assessment:

CGS classifications are consistent with Regulatory Guide 1.29 with the following clarification:

Cooling of the spent fuel storage pool is accomplished by the spent fuel cooling and cleanup system or by the seismic category RHR cross connection. The spent fuel pool cooling portion which is used normally to cool the spent fuel pool water was Seismic Category I by the first refueling outage. The cleanup portion of the system is not Seismic Category I. However, all structures, systems, and components required for maintaining water cover for the spent fuel are Seismic Category I. The spent fuel cooling system uses some common pump suction and discharge piping which is embedded in concrete. Prior to the first refueling outage, the Seismic Category I RHR system cross connection would have been used in case of core offload (see Section 9.1.3).

Specific Evaluation Reference:

See Sections 3.2.1, 3.7, 3.8, 3.9, 3.10, 9.1.3, and the OQAPD.

Regulatory Guide 1.30, Revision 0, August 1972

Quality Assurance Requirements for the Installation, Inspection, and Testing of Instrumentation and Electrical Equipment.

I Design and Construction Phase

Compliance or Alternate Approach Statement:

CGS generally complies with the guidance set forth in this regulatory guide. In a few cases, CGS complied with the intent of this guidance by an alternate approach.

General Compliance or Alternate Approach Assessment:

Procurement documents require compliance with ANSI N45.2.4 for the installation, inspection, and testing activities performed, except in those isolated instances where requirements were entered directly in the specification with limited or no reference to ANSI N45.2.4 or IEEE 336.

Specific Evaluation Reference:

None

II Operational Phase

Compliance is discussed in the OQAPD.

Regulatory Guide 1.31, Revision 3, April 1978

Control of Ferrite Content in Stainless Steel Weld Metal

Compliance or Alternate Approach Statement:

CGS complies with the guidance set forth in this regulatory guide.

General Compliance or Alternate Approach Assessment:

CGS complies fully with Revision 3 of this guide on all contracts initiated after the date of its publication. Prior to issuance of Revision 3, CGS conformed to Revision 2 of this regulatory guide.

Specific Evaluation Reference:

See Sections 4.5.2.4, 5.2.3.3, and 5.3.1.4.

Regulatory Guide 1.32, Revision 2, February 1977

Criteria for Safety Related Electric Power Systems for Nuclear Power Plants

Compliance or Alternate Approach Statement:

CGS complies with the guidance set forth in Revision 0 of this regulatory guide.

(Revisions 1 and 2 are not applicable to CGS since they are for use in evaluations of construction permits docketed after November 1, 1976, and April 15, 1977, respectively.)

General Compliance or Alternate Approach Assessment:

The CGS design is in full compliance with both Revision 0 of this regulatory guide and with Revision 2 of this regulatory guide, with the exception of those sections of the regulatory guide which require compliance with Regulatory Guides 1.93, Revision 0, and 1.75, Revision 0. See Section 8.3.1.2.1.1 for analysis of the CGS design relative to Regulatory Guide 1.75, Revision 0.

Specific Evaluation References:

See Sections 8.1.5.1, 8.1.5.2, 8.2.2.4, 8.3.1.1.7.1, 8.3.1.2.1.3, 8.3.1.3, 8.3.1.4, 8.3.2.1.1, 8.3.2.2.1, 8.3.2.3 and 8.3.2.4.

Regulatory Guide 1.33, Revision 2, February 1978

Quality Assurance Program Requirements (Operation)

Compliance or Alternate Approach Statement:

CGS complies with the intent of the guidance set forth in this regulatory guide by an alternate approach.

Compliance or Alternate Approach Assessment:

Compliance is discussed in the OQAPD.

Specific Evaluation Reference:

See Section 13.5.1.1 and the OQAPD.

Regulatory Guide 1.34, Revision 0, December 1972

Control of Electroslag Weld Properties

Compliance or Alternate Approach Statement:

This regulatory guide is not applicable to CGS since electroslag welding has not been used for welding of Class 1 or 2 vessels or components fabricated of low alloy or austenitic steel.

General Compliance or Alternate Approach Assessment:

Not applicable.

Specific Evaluation Reference:

Not applicable.

Regulatory Guide 1.35, Revision 2, January 1976

Inservice Inspection of Ungrouted Tendons in Prestressed Concrete Containment Structures

Compliance or Alternate Approach Statement:

This regulatory guide is not applicable to CGS since CGS does not have a prestressed concrete containment structure with ungrouted tendons.

General Compliance or Alternate Approach Assessment:

Not applicable.

Specific Evaluation Reference:

Not applicable.

Regulatory Guide 1.36, Revision 0, February 1973

Nonmetallic Thermal Insulation for Austenitic Stainless Steel

Compliance or Alternate Approach Statement:

CGS complies with the guidance set forth in this regulatory guide.

General Compliance or Alternate Approach Assessment:

Thermal insulation on stainless steel piping conforms to requirements of this regulatory guide.

Specific Evaluation Reference:

Not applicable.

Regulatory Guide 1.37, Revision 0, March 1973

Quality Assurance Requirements for Cleaning of Fluid Systems and Associated Components of Water-Cooled Nuclear Power Plants

I Design and Construction Phase

Compliance or Alternate Statement:

CGS generally complies with the guidance set forth in this regulatory guide. In a few cases, CGS complied with the intent of this guidance by an alternate approach.

General Compliance or Alternate Approach Assessment:

Procurement documents generally required compliance with ANSI N45.2.1. Whether or not reference to ANSI N45.2.1 was provided, a detailed specification section supplied comprehensive instructions on cleaning and cleanliness.

Specific Evaluation Reference:

None

II Operational Phase

Compliance is discussed in the OQAPD.

Regulatory Guide 1.38, Revision 2, May 1977

Quality Assurance Requirement for Packaging, Shipping, Receiving, Storage, and Handling of Items for Water-Cooled Nuclear Power Plants

I Design and Construction Phase

Compliance or Alternate Approach Statement:

CGS generally complies with the guidance set forth in Revision 0 of this regulatory guide. In a few cases, CGS complied with the intent of this guidance by an alternate approach.

The changes to the regulatory positions of Revision 1 and 2 of this regulatory guide, which specify additional detailed requirements and make certain nonmandatory sections of ANSI N45.2.2 mandatory, are not implemented.

General Compliance or Alternate Approach Assessment:

Procurement documents required compliance with ANSI N45.2.2, Revision 0, and/or contained a generic specification packaging section and/or specified directly requirements for these functions.

The regulatory positions contained in Revision 1 and 2 of this regulatory guide changed significantly from the original issue. Revision 1 and 2 contain additional detailed requirements and make nonmandatory sections of ANSI N45.2.2 mandatory. Some, but not all, of the changes to the regulatory positions are included in procurement documents. Since these changes were made after award of the applicable procurement documents, Revision 1 and 2 are not fully implemented.

Specific Evaluation Reference:

None

II Operational Phase

Compliance is discussed in the OQAPD.

Regulatory Guide 1.39, Revision 1, October 1976

Housekeeping Requirements for Water-Cooled Nuclear Power Plants

I Design and Construction Phase

Compliance or Alternate Approach Statement:

CGS generally complies with the guidance set forth in this regulatory guide. In some cases, CGS complied with the intent of this guidance by an alternate approach.

General Compliance or Alternate Approach Assessment:

Procurement documents required compliance with ANSI N45.2.3 or with selected portions of ANSI N45.2.3 or specified directly applicable housekeeping requirements.

Specific Evaluation Reference:

None

II Operational Phase

Compliance is discussed in the OQAPD.

Regulatory Guide 1.40, Revision 0, March 1973

Qualification Tests of Continuous Duty Motors Installed Inside the Containment of Water-Cooled Nuclear Power Plants

Compliance or Alternate Approach Statement:

CGS complies with the guidance set forth in the regulatory guide.

General Compliance or Alternate Approach Assessment:

Containment fans have been qualified for in containment use in accordance with IEEE 334-1974.

Specific Evaluation Reference:

See Section 9.4.11.3.

Regulatory Guide 1.41, Revision 0, March 1973

Preoperational Testing of Redundant On-Site Electrical Power Systems to Verify Proper Load Group Assignments

Compliance or Alternate Approach Statement:

CGS complies with the guidance set forth in the regulatory guide.

General Compliance or Alternate Approach Assessment:

As part of the preoperational test program, the onsite electric power systems will be tested in order to verify the existence of independence among redundant onsite power sources and their respective load groups.

Specific Evaluation Reference:

See Sections 8.1.5.2, 8.3.1.2.2 and 14.2.

Regulatory Guide 1.43, Revision 0, May 1973

Control of Stainless Steel Weld Cladding of Low-Alloy Steel Components

Compliance or Alternate Approach Statement:

This regulatory guide is not applicable to CGS since CGS does not use stainless steel cladding on coarse grain low-alloy steel for safety class components.

General Compliance or Alternate Approach Assessment:

Not applicable.

Specific Evaluation Reference:

Not applicable.

Regulatory Guide 1.44, Revision 0, May 1973

Control of the Use of Sensitized Stainless Steel

Compliance or Alternate Approach Statement:

CGS complies with the guidance set forth in this regulatory guide.

General Compliance or Alternate Approach Assessment:

CGS conforms fully to the recommended welding controls for stainless steel welding. All materials are purchased to the latest ASME and ASTM specifications at time of order, and the cleaning requirements set forth in the guide are implemented during document review of vendor cleaning procedures.

Specific Evaluation Reference:

See Sections 4.5.2.4 and 5.3.1.4.

Regulatory Guide 1.46, Revision 0, May 1973

Protection Against Pipe Whip Inside Containment

Compliance or Alternate Approach Statement:

CGS complies with the intent of the guidance set forth in this regulatory guide by an alternate approach.

Pipe break location criteria is based on guidelines provided in this regulatory guide, as well as the NRC Branch Technical Positions ASB 3-1, Appendix B, and MEB 3-1. The criteria is applicable to all piping systems inside as well as outside containment. Pipe whip protection for the recirculation system is provided by the NSSS supplier. Pipe whip protection for all other piping systems, including the NSSS-furnished main steam piping, is provided by the architect-engineer.

Specific Evaluation Reference:

See Section 3.6.2.1.

Regulatory Guide 1.47, Revision 0, May 1973

Bypassed and Inoperable Status Indication for Nuclear Power Plant Safety Systems

Compliance or Alternate Approach Statement:

CGS complies with the intent of the guidance set forth in this regulatory guide by an alternate approach.

General Compliance or Alternate Approach Assessment:

The alternate approach is provided in Section 7.1.2.4.

Specific Evaluation Reference:

Not applicable.

This page left intentionally blank.

Regulatory Guide 1.48, Revision 0, May 1973

Design Limits and Loading Combinations for Seismic Category I Fluid System Components

Compliance or Alternate Approach Statement:

CGS complies with the guidance set forth in this regulatory guide.

General Compliance or Alternate Approach Assessment:

Implementation of this regulatory guide is discussed in Section 3.9.3.1.1.7.

Specific Evaluation Reference:

See Section 3.9.3.1.1.7.

Regulatory Guide 1.50, Revision 0, May 1973

Control of Preheat Temperature for Welding Low-Alloy Steel

Compliance or Alternate Approach Statement:

CGS complies with the guidance set forth in this regulatory guide.

General Compliance or Alternate Approach Assessment:

CGS complies with the guidance set forth in the regulatory guide by maintaining the preheat temperature of low alloy steel welds until the post-weld heat treatment has been performed. For welds which were made without this "keep hot" requirement, Regulatory Position C4 for determining the soundness of the weld by acceptable examination procedures, has been enforced.

Specific Evaluation Reference:

See Section 5.3.1.4.

Regulatory Guide 1.51, Revision 0, May 1973

In-Service Inspection of ASME Code Class 2 and 3 Nuclear Power Plant Components

Compliance or Alternate Approach Statement:

This regulatory guide has been withdrawn and is no longer applicable.

General Compliance or Alternate Approach Assessment:

Inservice inspection of CGS is based on ASME Section XI for Classes 1, 2, and 3.

Specific Evaluation Reference:

See Section 3.9.6.

Regulatory Guide 1.52, Revision 2, March 1978

Design, Testing, and Maintenance Criteria for Atmosphere Cleanup System Air Filtration and Adsorption Units of Light-Water-Cooled Nuclear Power Plants

Compliance or Alternate Approach Statement:

CGS complies with the intent of the guidance given in Revision 2 of this regulatory guide with the exception that the operation identified in C-4.d, Revision 2 is modified by Technical Specification Amendment 239 which adopts the testing criteria identified in Regulatory Position 6.1 of Revision 3.

General Compliance or Alternate Approach Assessment:

Standby gas treatment filter units and the control room emergency filter units are required to perform safety-related functions. A comparison of the engineered safety feature air filtration systems with respect to the regulatory position of Regulatory Guide 1.52, Revision 2, Article C, is as follows:

Paragraph Number	SGTS	Control Room System
C-1. "Environmental Design Criteria"		
1.a	In compliance	In compliance
1.b	In compliance	In compliance
1.c	In compliance	In compliance
1.d	In compliance	In compliance
1.e	In compliance	In compliance

C-2. "System Design Criteria"

2.a	In compliance	See Note 1
2.b	In compliance	In compliance
2.c	In compliance	In compliance
2.d	See Note 2	See Note 2
2.e	In compliance	In compliance
2.f	In compliance	In compliance
2.g	See Note 3	See Note 3
2.h	In compliance	In compliance
2.i	In compliance	In compliance
2.j	See Note 4	See Note 4
2.k	In compliance	In compliance
2.1	In compliance	In compliance

C-3. "Component Design Criteria and Qualification Testing"

3.a	See Note 5	See Note 5
3.b	In compliance	In compliance
3.c	In compliance	In compliance
3.d	See Note 6	See Note 6
3.e	In compliance	In compliance
3.f	In compliance	In compliance
3.g	See Note 7	See Note 7
3.h	In compliance	In compliance
3.i	See Note 8	See Note 8
3.j	In compliance	In compliance
3.k	In compliance	In compliance
3.l	In compliance	In compliance
3.m	In compliance	In compliance
3.n	In compliance	In compliance
3.o	In compliance	In compliance
3.p	In compliance	In compliance

C-4. "Maintenance"

4.a	See Note 9	See Note 9
4.b	See Note 10	See Note 10
4.c	In compliance	In compliance
4.d	See Note 11	In compliance
4.e	In compliance	In compliance

C-5. "In-Place Testing Criteria"

5.a	In compliance	In compliance
5.b	See Note 13	In compliance
5.c	See Note 14	See Note 14
5.d	See Note 14	See Note 14

C-6. "Laboratory Testing Criteria For Activated Carbon"

6.a	See Note 12	See Note 12
6.b	See Note 12	See Note 12

Note 1 (C-2.a) Demisters are not provided in the control room filter units due to the absence of entrained moisture during normal and abnormal conditions. High-efficiency particulate air (HEPA) filters are not provided after the charcoal filter because filter unit discharges into control room air conditioning unit on intake side of medium efficiency filters.

Note 2 (C-2.d) Both units of the standby gas treatment system are located in secondary containment and are not subject to containment pressure surges during accidents. Redundant Seismic Category I valves in series isolate and protect these units from containment DBA pressures. Both units of the control room emergency filter system are not subject to containment pressure surges during accidents.

Note 3 (C-2.g) Abnormal pressure drops across critical components of the SGTS and control room filter units cause an alarm in the main control room, however, no facilities to record the pressure drops are provided. A record of pressure drop across individual components and the total SGTS system would be of no value because the SGTS is a variable flow system, with flow modulated to maintain the reactor building at a fixed negative pressure. Flow through the system, which is the pertinent parameter, is recorded in the main control room, and computer input is provided to record high pressure alarms across critical components.

Note 4 (C-2.j) SGTS filter units are not designed to be removable from the building as an intact unit. The size of the units precludes removal in one section. In the event the units become radioactively contaminated they will be permitted to decay in place until radiation levels are sufficiently low to permit the removal of all internals for disposal.

Note 5 (C-3.a) SGTS system demisters furnished by FARR Company, are not in complete conformance with ANSI N509-1976 because they were not qualified by testing in accordance with AEC report MSAR-71-45. A moisture eliminator study performed by FARR Company in 1970, which did not conform to the MSAR-71-45 test setup, indicated that the installed demisters will protect the HEPA filters in the system from blinding under conditions far more severe than those hypothesized for the SGTS system. Since, under the accident mode, entrained water droplets will not be in the inlet air stream, the FARR tests and qualification are considered adequate.

Note 6 (C-3.d) HEPA filters are not subjected to iodine removal sprays, therefore, aluminum separators are used.

An alternate approach to determine acceptable design and qualification testing of HEPA filters is the use of Regulatory Guide 1.52, Revision 3, Section 4.4.

Note 7 (C-3.g) Access doors into SGTS units are 50 x 20 in. Vacuum breakers are not provided on doors of SGTS and control room units. Unit fans are normally off.

Note 8 (C-3.i) Test 4, Activity (Ref. Table 5-1, ANSI N509-1976)

Base carbon (unimpregnated) activity test was not previously required. Because all available carbon was of the impregnated type this was not run.

Test 5, Radioiodine Removal Efficiency (Ref. Table 5-1, ANSI N509-1976)

New carbon will be tested in accordance with ASTM D3803-1989.

Average atmosphere resident time in each SGTS unit is greater than 0.5 sec.

Note 9 (C-4.a) Doors provided on SGTS Units are 50 x 20 in. Access panels are provided on control room units. Vacuum breakers are not provided on any of the units since they are normally not operational.

Note 10 (C-4.b) Control room filter units have approximately 18 in. between prefilter and HEPA filter frames, and approximately 4 ft are provided between HEPA and charcoal filter frames. SGTS filter units have a minimum of three feet provided between demister, heater, prefilter, HEPA and charcoal filter frames.

Note 11 (C-4.d) Strip heaters are provided in the charcoal filter plenum of the SGTS units to maintain charcoal beds moisture free, therefore, operation of the fans is not required for that purpose. Testing of the blast coil heaters is performed in accordance with the requirements of Regulatory Position 6.1 of Revision 3 of the Regulatory Guide 1.52

Note 12 (C-6.a C-6.b)	The laboratory testing criteria for the carbon adsorber section of the SGTS and CREF System meets the objectives of this section of the guide. Twelve representative test samples of four-inch length are provided across each of the two 4 in. deep beds in each SGTS filter unit. At least once per 30 months one sample from across each SGT and CREF adsorber bed is removed and sent to a laboratory for testing. For the SGTS, samples are tested in series to represent the 8-inch total bed depth. Laboratory tests are performed in accordance with ASTM D3803-1989 with methyl iodide at 30°C and 70% relative humidity with a penetration of less than 0.5% for the SGTS and less than 2.5% for the CREF System as an acceptance level. The SGTS will also be tested at a face velocity of 75 ft per minute. In the event that a sample fails this test, the carbon adsorber in its bed will be replaced.
Note 13 (C-5.b)	The flow distribution tests developed by the designer combined with the series filter design at CGS adequately meet the intent of this test. The results of the flow distribution tests as set forth in ANSI N51 are difficult to interpret with the 'U' shaped charcoal beds installed due to air flow disturbance caused by the measuring apparatus. This is particularly true on the parallel legs of the 'U' shaped beds, where the flow measuring device must be placed in the rather narrow air passage. Flow distribution criteria was developed by the designers based on the ±20% variation criteria established in Regulatory Guide 1.52 and has been met in field tests. In addition, each of the filter trains has two separate charcoal beds in series. This allows mixing of the filtered gas between the beds and further reduces the effects of variations in charcoal packing distribution.
Note 14 (C-5.c C-5.d)	The inplace leak testing of the SGT and CREF HEPA and carbon filters meets the objectives of this section of the guide with the exception that testing is performed in accordance with ASME N510-1989, Sections 10 and 11, respectively.

Specific Evaluation Reference:

See Section 6.5.1.

Regulatory Guide 1.53, Revision 0, June 1973

Application of the Single-Failure Criterion to Nuclear Power Plant Protective Systems

Compliance or Alternate Approach Statement:

CGS complies with the guidance set forth in the regulatory guide.

General Compliance or Alternate Approach Assessment:

Regulatory Guide 1.53 provides guidance for the application of the single-failure criterion as discussed in IEEE 379-1972. The regulatory guide recommends the application of IEEE 379-1972 with four supplemental conditions. The design of the CGS electrical system is in conformance with IEEE 379-1972 and the four supplemental conditions noted in Regulatory Position C.

Specific Evaluation Reference:

See Section 8.1.5.2.

Regulatory Guide 1.54, Revision 0, June 1973

Quality Assurance Requirements for Protective Coatings Applied to Water-Cooled Nuclear Power Plants

Compliance or Alternate Approach Statement:

CGS complies with the guidance set forth in this regulatory guide as described below.

General Compliance or Alternate Approach Assessment:

Special decontaminable coatings in primary containment areas are manufactured and applied in accordance with quality assurance requirements of ANSI N101.4.

Specific Evaluation Reference:

See Section 6.1.2.

Regulatory Guide 1.55, Revision 0, June 1973

Concrete Placement in Category I Structures

Compliance or Alternate Approach Statement:

CGS complies with the guidance set forth in this regulatory guide.

General Compliance or Alternate Approach Assessment:

The requirements of the guide have been included in the appropriate construction contract specifications. Compliance with the guide is assured by the application of appropriate concrete specifications, construction practices, codes and standards, including the documents recommended by the guide, for the placement of concrete; by the implementation of approved communications procedures between qualified design and construction forces; and by implementation of an approved QA program which ensures design control and coordinated quality control of concrete material, placement, inspection and testing between applicant, designer and constructor.

Specific Evaluation Reference:

See Sections 3.8.3.2, 3.8.3.6, 3.8.4.2, 3.8.4.6, and 3.8.5.2 and Table 3.8-4.

Regulatory Guide 1.56, Revision 0, June 1973

Maintenance of Water Purity in Boiling Water Reactors

I. Design and Construction Phase

Compliance or Alternate Approach Statement:

The design of CGS complies with the guidance set forth in this regulatory guide.

General Compliance or Alternate Approach Assessment:

CGS design complies with the guidance of this regulatory guide by providing for the following:

a. Conductivity measurement and recording of the condenser hotwell and condensate flow discharge to the condensate demineralizer system,

b. Flow measurement and recording of flow through each condensate demineralizer unit,

c. Conductivity measurement, recording, and alarming of the condensate effluent discharge from each condensate demineralizer unit and from the combined system effluent,

d. Conductivity measurement, recording, and alarming of the inlet and outlet coolant to and from the RWCU system,

e. Extensive sampling of reactor coolant and auxiliary systems,

f. Full flow condensate demineralizer system, and

g. Excess condensate demineralizer capacity to permit recharging of resin beds during normal plant operation.

Specific Evaluation Reference:

See Section 5.2.3.2.2.

II. Operations Phase

Compliance or Alternate Approach Statement:

Operation of CGS RWCU and condensate demineralizer system complies with the general guidance set forth in Revision 1, July 1978, of this regulatory guide.

General Approach or Alternate Approach Assessment:

Operation of CGS complies with the guidance of the regulatory guide by providing the following:

a. Operating limits are prescribed for condensate filter demineralizers. Plant operating conductivity limits are defined for the RWCU demineralizers. Effluent conductivity for the individual demineralizers is recorded and a main control room alarm is triggered when conductivity limits are reached or exceeded;

b. Condensate filter demineralizer conductivity and flow instrumentation are used in the general assessment of individual demineralizer unit performance and capacity;

c. An operational limit is set for hotwell conductivity which triggers a main control room alarm. Hotwell conductivity, in conjunction with precalculated assessment of condenser inleakage rates and demineralizer performance permits appropriate action to be taken on exceeding the operating limit setpoint;

d. Laboratory analyses are performed for chloride, pH, and conductivity at intervals appropriate to the plant operating status. Sampling and analysis frequency is described in the LCS and plant procedures; and

e. Not applicable exception is taken to item C.4.d which applies to bead-type, deep-bed demineralizer systems, which are not incorporated into the CGS design. The general guidance of this item will, however, be applied to the pressure precoat filter demineralizer systems. Each lot of precoat resins will be analyzed for capacity and impurity levels. Frequency of precoat changeout will be staggered and is initially dictated by pressure drop associated with suspended solids. Subsequent to pressure drop limitations, frequency of sequential precoat changeout is established based on dissolved chemical constituents and flow throughput parameters.

Regulatory Guide 1.57, Revision 0, June 1973

Design Limits and Loading Combinations for Metal Primary Reactor Containment System Components

Compliance or Alternate Approach Statement:

CGS complies with the intent of the guidance set forth in this regulatory guide by an alternate approach.

General Compliance or Alternate Approach Assessment:

The structural design criteria for the primary containment vessel is consistent with the provisions of this regulatory guide, except with respect to the stress limits specified in Section C-1-b(2) of the guide, for the load combination of accident recovery flooding plus OBE. For this load combination, the stress limits used for CGS are within the limits set forth in the NRC Standard Review Plan Section 3.8.2, Table 3.8.2-1.

This exception has precedent as stated in GESSAR, paragraph 3.8.2.3.12, "Accident Recovery Evaluation," Page 3.8-9b, and has been accepted by the NRC, as documented in paragraph 3.8.2, page 3-14, of the NRC Safety Evaluation Report for the GESSAR-328 Nuclear Island Standard Design dated December 1975.

Specific Evaluation Reference:

See Section 3.8.2.3.10.

Regulatory Guide 1.58, Revision 1, August 1980

Qualification of Nuclear Power Plant Inspection, Examination, and Testing Personnel

I Design and Construction Phase

Compliance or Alternate Approach Statement:

As of November 1980, CGS complies with the guidance set forth in this regulatory guide via an alternate approach described below.

General Compliance or Alternate Approach Assessment:

Prior to issuance of Revision 1 of this Regulatory Guide, personnel performing quality-related activities were provided indoctrination and training in the requirements of the applicable quality assurance program, procedures, instructions and drawings affecting their work. Documented evidence of the above training was maintained. The indoctrination and training complied with the requirements of Appendix B, 10 CFR Part 50, and ANSI N45.2.

As of November 1980, in addition to the indoctrination and training requirements noted above, requirements which meet this regulatory guide were imposed on site contractors for personnel performing inspections, examinations, and tests. These requirements specify that initial evaluations of education, experience, and qualifications are to be performed and documented; however, formal certificates are not required to be issued because specific inspections, examinations, and tests are performed in accordance with approved procedures. Therefore, specific capability identification and levels of certification are not required.

Specific Evaluation Reference:

None

II Operational Phase

Compliance is discussed in the OQAPD. Also see Section 14.2.

Regulatory Guide 1.59, Revision 1, April 1976

Design Basis Floods for Nuclear Power Plants

Compliance or Alternate Approach Statement:

CGS complies with the guidance set forth in this regulatory guide.

General Compliance or Alternate Approach Assessment:

All the requirements that are specified in Regulatory Guide 1.59 are followed in the design of CGS.

Based on Regulatory Guide 1.102, the plant site is classified as "Dry Site." Therefore, CGS is considered to be in compliance with Regulatory Guide 1.59 and its Appendix A.

Specific Evaluation Reference:

See Section 2.4.

Regulatory Guide 1.60, Revision 1, December 1973

Design Response Spectra for Seismic Design of Nuclear Power Plants

Compliance or Alternate Approach Statements:

CGS complies with the intent of the guidance set forth in this regulatory guide by an alternate approach.

General Compliance or Alternate Approach Assessment:

CGS meets the seismic requirements previously acceptable to the NRC as discussed in Section 3.7.1.1.

Specific Evaluation Reference:

See Section 3.7.1.1.

Regulatory Guide 1.61, Revision 0, October 1973

Damping Values for Seismic Design of Nuclear Power Plants

Compliance or Alternate Approach Statement:

CGS complies with the guidance set forth in this regulatory guide.

General Compliance or Alternate Approach Assessment:

The damping values recommended by Regulatory Guide 1.61 are greater, and therefore less conservative, than the values used for CGS. The more conservative CGS design satisfies the requirements of Regulatory Guide 1.61.

Specific Evaluation Reference:

See Section 3.7.1.3.

Regulatory Guide 1.62, Revision 0, October 1973

Manual Initiation of Protective Actions

Compliance or Alternate Approach Statement:

CGS complies with the guidance set forth in this regulatory guide.

General Compliance or Alternate Approach Assessment:

Means are provided in the main control room for the manual initiation of BOP engineered safety feature systems or supporting systems at the division level by the operation of a minimum of equipment.

Specific Evaluation Reference:

See Section 7.3.2.1.3.

Regulatory Guide 1.63, Revision 2, July 1978, and Revision 3, February 1987

Electric Penetration Assemblies in Containment Structures for Light-Water-Cooled Nuclear Power Plants

Compliance or Alternate Approach Statement:

Revisions 2 and 3 are not applicable to CGS since they apply to the evaluation of construction permit applications docketed after August 31, 1978 and February 28, 1987, respectively. CGS complies with the guidance set forth in IEEE 317-1972 as modified by Revision 0 of Regulatory Guide 1.63.

General Compliance or Alternate Approach Assessment:

The compliance assessment given below correspond numerically to the regulatory positions as indicated in Section C of Regulatory Guide 1.63, Revision 0, October 1973.

1. Capability of withstanding maximum fault I^2T heating in the case that overload protective devices fail:

   CGS is in compliance with this requirement. In all cases, the overcurrent protective devices in circuits subject to short circuit are backed up by other overcurrent protective devices which are also designed to limit the fault current I^2T heating experienced by the penetration conductors to levels below the conductor ratings.

2. The maximum containment pressure specified for CGS complies with the safety margins required by the ASME B&PV Code, Article N3000, footnote 1.

3. The position refers to specific applicability or acceptability of other codes, standards, and guides covered separately in other regulatory guides.

4. CGS complies with the requirement of IEEE 336 and ANSI N45.2 concerning the QA.

Specific Evaluation Reference:

See Sections 3.8.6, 7.1.2.3, and 8.1.5.2.

Regulatory Guide 1.64, Revision 2, June 1976

Quality Assurance Requirements for the Design of Nuclear Power Plants

I. Design and Construction Phase

Compliance or Alternate Approach Assessment:

Regulatory Guide 1.64, Revision 0, Revision 1, and Revision 2 do not apply to CGS since they apply to construction permits docketed after September 1973.

General Compliance or Alternate Approach Assessment:

Not applicable.

Specific Evaluation Reference:

Not applicable.

II. Operational Phase

Compliance is discussed in the OQAPD.

Regulatory Guide 1.67, Revision 0, October 1973

Installation of Overpressure Protection Devices

Compliance or Alternate Approach Statement:

This regulatory guide is not applicable to CGS since the reactor coolant system pressure boundary safety/relief valve relieves to a closed discharge system.

General Compliance or Alternate Approach Assessment:

Not applicable.

Specific Evaluation Reference:

Not applicable.

Regulatory Guide 1.68, Revision 1, January 1977

Initial Test Programs for Water-Cooled Reactor Power Plants

Compliance or Alternate Approach Statement:

This regulatory guide is not applicable to the CGS initial test program since Revision 0 of this regulatory guide is committed to in Section 14.2.7. However, CGS complies with the intent of the guidance set forth in this regulatory guide by an alternate approach.

General Compliance or Alternate Approach Assessment:

See Section 14.2 for description of initial testing program and to Sections 14.2.7 and 1.8.2 for statements concerning compliance with Regulatory Guide 1.68, Revision 0. Revision 1 of this guide in general clarifies Revision 0 and therefore there are no exceptions to the intent of this procedure.

Specific Evaluation Reference:

See Sections 14.2.7 and 1.8.2 for a discussion of Regulatory Guide 1.68, Revision 0.

Regulatory Guide 1.68.1, Revision 1, January 1977

Preoperational and Initial Startup of Feedwater and Condensate Systems for Boiling Water Reactor Power Plants.

Compliance or Alternate Approach Statements:

CGS complies with the intent of the guidance set forth in this regulatory guide by an alternate approach.

General Compliance or Alternate Approach Assessments:

The preoperational testing and the initial Startup testing as described in Section 14.2 complies with the intent of this regulatory guide. However, due to the limitations of the auxiliary steam supply system, the confirmation that the feedwater pumps satisfy required head, flow rate and suction head will not occur until the startup phase of the initial test program when the normal steam supply is available to the feedwater pump turbines.

Specific Evaluation Reference:

See Section 14.2.12.1.1.

Regulatory Guide 1.68.2, Revision 0, January 1977

Initial Startup Test Program To Demonstrate Remote Shutdown Capability For Water-Cooled Nuclear Power Plants

Compliance or Alternate Approach Statement:

CGS complies with the intent of the guidance set forth in this regulatory guide by an alternate approach.

General Compliance or Alternate approach assessment:

The startup test described in Section 14.2.12.3.28 complies with the regulatory guide with the following exceptions:

a. The test will be initiated by scramming plant from the control room versus a location outside the control room as described in Section C.3 of the regulatory guide. This exception is made to better simulate the actual procedure which would be followed if a control evacuation were to occur. The capability to scram the reactor outside the control room exists; for example, tripping the RPS motor generator (MG) sets.

b. The cold shutdown demonstration procedure as described in Section C.4 of the Regulatory Guide may not be performed immediately following the demonstration of achieving and maintaining safe hot standby from outside the control room. Rather this cooldown portion may be performed when cooldown is required during the course of the normal power ascension test program. Although this is an exception to Regulatory Guide 1.68.2, Revision 0, Revision 1 of this Guide contains provisions for a delay in the demonstration of cooldown.

Specific Evaluation Reference:

See Sections 14.2.12.3.28 and 7.4.1.4.

Regulatory Guide 1.69, Revision 0, December 1973

Concrete Radiation Shields for Nuclear Power Plants

Compliance or Alternate Approach Statement:

CGS complies with the intent of the guidance set forth in this regulatory guide by an alternate approach.

General Compliance or Alternate Approach Assessment:

Although the regulatory guide was promulgated after design and specification implementation of the engineering criteria, the recommended design and construction practices specified in the regulatory guide are documented in codes and specifications which were used in the development of the engineering criteria and contract specifications.

Specific Evaluation Reference:

See Section 12.3.2.

Regulatory Guide 1.70, Revision 2, September 1975

Standard Format and Content of Safety Analysis Reports for Nuclear Power Plants - LWR Edition

Compliance or Alternate Approach Statement:

This FSAR complies with the guidance set forth in this regulatory guide.

General Compliance or Alternate Approach Assessment:

The FSAR has generally been prepared to satisfy the requirements of Regulatory Guide 1.70, Revision 2. This includes both format and content.

Specific Evaluation Reference:

The balance-of-plant (BOP) portions of this FSAR.

Regulatory Guide 1.71, Revision 0, December 1973

Welder Qualifications for Areas of Limited Accessibility

Compliance or Alternate Approach Statement:

CGS complies with the intent of the guidance set forth in this regulatory guide by an alternate approach.

General Compliance or Alternate Approach Assessment:

There are few incidents where welding accessibility is limited during fabrication. Where accessibility to any weld joint was restricted to a degree which prevented the welder from direct visual observation of the arc and the puddle in any area of the weld, or which required the use of mirrors or extensions to the torch handle or electrode holder, the contractor notifies the welding engineer. All limited access welds are determined by a welding engineer. For ASME Section III, Class 1, 2, and 3 components and Subsection NF and NE, a performance qualification test that simulates the limited access condition is required by the welding engineer. For welds in the pressure retaining components the welder's test weld is radiographed in accordance with and shall conform to the acceptance standards of ASME Section VIII, Division 1, U.W.-51. Alternately, the weld may be examined ultrasonically in accordance with ASME Section VIII, Division 1, Appendix U.

Specific Evaluation Reference:

See Sections 4.5.2.4, 5.2.3.3, and 5.3.1.4.

Regulatory Guide 1.72, Revision 0, December 1973

Spray Pond Plastic Piping

Compliance or Alternate Approach Statement:

This regulatory guide is not applicable to CGS because CGS does not use plastic piping in its spray ponds.

General Compliance or Alternate Approach Assessment:

Not applicable.

Specific Evaluation Reference:

Not applicable.

Regulatory Guide 1.73, Revision 0, January 1974

Qualification Tests of Electric Valve Operators Installed Inside the Containment of Nuclear Power Plants

Compliance or Alternate Approach Statement:

CGS complies with the guidance set forth in this regulatory guide.

General Compliance or Alternate Approach Assessment:

Auxiliary equipment associated with valve operators are tested in accordance with the subject standards. Designed service conditions are implemented in the tests. Conservative values of the environmental variables during and after a design basis accident are used in the tests to assure that the testing is carried out under more severe environmental conditions than those expected.

Specific Evaluation Reference:

See Sections 3.11 and 8.1.5.2.

Regulatory Guide 1.74, Revision 0, February 1974

Quality Assurance Terms and Definitions

I Design and Construction Phase

Compliance or Alternate Approach Statement:

CGS complies with the guidance set forth in this regulatory guide.

General Compliance or Alternate Approach Assessment:

The terms used in describing and implementing quality assurance programs for CGS have complied with ANSI N45.2.10-1973 or were clarified at the point of application.

Specific Evaluation Reference:

None

II Operational Phase

Compliance is discussed in the OQAPD.

Regulatory Guide 1.75, Revision 1, January 1975

Physical Independence of Electric Systems

Compliance or Alternate Approach Statement:

This regulatory guide is not applicable to CGS since it applies to the evaluation of construction permit applications docketed after February 1974. However, CGS complies with the intent of the guidance set forth in this regulatory guide by an alternate approach.

General Compliance or Alternate Approach Assessment:

See Section 8.3.1.4.2.7 for an assessment of CGS relative to this regulatory guide.

Specific Evaluation Reference:

See Section 8.3.1.4.2.7.

Regulatory Guide 1.76, Revision 0, April 1974

Design Basis Tornado for Nuclear Power Plants

Compliance or Alternate Approach Statement:

CGS complies with the intent of the guidance set forth in this regulatory guide by an alternate approach.

General Compliance or Alternate Approach Assessment:

The tornado design criteria for Columbia Generating Station were revised based on design basis tornado characteristics in NUREG-1503. The design basis tornado characteristics used are less severe than those specified in Regulatory Guide 1.76 for Region III. In January 1996, the revised criteria were found acceptable by the NRC.

Specific Evaluation Reference:

See Section 3.3.2.

Regulatory Guide 1.78, Revision 0, June 1974

Assumptions for Evaluating the Habitability of a Nuclear Power Plant Control Room During a Postulated Hazardous Chemical Release

Compliance or Alternate Approach Statement:

CGS complies with the guidance set forth in this regulatory guide.

General Compliance or Alternate Approach Assessment:

The main control room habitability during a postulated hazardous chemical release evaluation complies with assumptions and toxicity limits in Revision 0 of this regulatory guide. The evaluation uses toxicity limits presented in Revision 1 for those chemicals not discussed in Revision 0. The results are presented in Chapter 6.

Specific Evaluation Reference:

See Sections 2.2.3 and 6.4.

Regulatory Guide 1.80, Revision 0, June 1974

Preoperational Testing of Instrument Air Systems

Compliance or Alternate Approach Statement:

CGS complies with the guidance set forth in this regulatory guide.

General Compliance or Alternate Approach Assessment:

The primary containment instrument air system preoperational test procedure incorporated the requirements of this regulatory guide.

Specific Evaluation Reference:

See Sections 14.2.7.3 and 14.2.12.1.34.

Regulatory Guide 1.82, Revision 0, June 1974

Sumps for Emergency Core Cooling and Containment Spray Systems

Compliance or Alternate Approach Statement:

This regulatory guide is not applicable to CGS since no sumps are used for ECCS and containment spray.

General Compliance or Alternate Approach Assessment:

Not applicable.

Specific Evaluation Reference:

Not applicable.

Regulatory Guide 1.84

Design, Fabrication, and Materials Code Case Acceptability, ASME Section III

Regulatory Guide Intent:

This guide lists all Section III Code Cases that the NRC has approved for use. It is updated on a regular basis to reflect the changes to the ASME Code Cases and the current position of the NRC on acceptability for use. The guide contains tables that detail the NRC acceptance requirements for current, annulled, and superseded Code Cases. Code Cases that the NRC determined to be unacceptable are listed in Regulatory Guide 1.193, "ASME Code Cases Not Approved for Use".

Application Assessment:

Assessed capability in design.

Compliance or Alternate Approach Statement:

The current version of the Regulatory Guide is utilized to determine acceptable Code Cases for all new and existing plant applications. The FSAR does not track individual Code Cases and revision numbers. Not all acceptable Code Cases listed in the regulatory guide are used. The Code Cases that are utilized for Columbia are referred to in the plant design/installation documentation.

General Compliance or Alternate Approach Assessment:

Code Cases are utilized in accordance with the requirements of the regulatory guide provisions for acceptance. Section III Code Cases that are not yet endorsed may be utilized via submittal to the NRC for approval in accordance with the regulatory guide. The plant scope of supply is in full compliance with this regulatory guide.

Specific Evaluation Reference:

See Section 3.8.2.2.

Similar Application Reference:

None.

Regulatory Guide 1.85, Revision 31, 1998*

Materials Code Case Acceptability - ASME Section III, Division 1

Compliance or Alternate Approach Statement:

CGS complies with the guidance set forth in this regulatory guide as described below.

General Compliance or Alternate Approach Assessment:

The use of an ASME Section III, Division 1, code case applicable to materials use on CGS is approved by Energy Northwest only after evaluating its technical acceptability and confirming that its use is acceptable to the NRC. This confirmation is by ascertaining that the code case is listed in this regulatory guide (or applicable earlier revision) or by specific written acceptance by the NRC.

Specific Evaluation Reference:

See Section 3.8.2.2.

* Regulatory Guide 1.85 was withdrawn in 2004. See Regulatory Guide 1.84 for NRC acceptance of current Materials Code Cases.

Regulatory Guide 1.88, Revision 2 October 1976

Collection, Storage and Maintenance of Nuclear Power Plant Quality Assurance Records

I Design and Construction Phase

Compliance or Alternate Approach Statement:

I Design and Construction Phase

Prior to the original issue of this regulatory guide and construction of the CGS records facility, Project Quality Assurance complied with the intent of 10 CFR Part 50, Appendix B, by duplicate storage of records. Project Quality Assurance also complied with the original issue and revisions of this regulatory guide by duplicate storage. Since March 1977, Project Quality Assurance has complied with Revision 2 of this regulatory guide as described below.

General Compliance or Alternate Approach Assessment:

Since March 1977, the collection, storage, and maintenance of quality assurance records by Project Quality Assurance has been in compliance with ANSI N45.2.9 and NFPA No. 232-1975 for fire protection as imposed by this regulatory guide. The record facility has a minimum of a 2-hr rating.

Procurement documents directly specify requirements for collection, storage, and maintenance of records. The requirements generally meet the intent of ANSI N45.2.9 except that storage facilities or cabinets are only required to meet a 1-hr rating.

II Operational Phase

Compliance is discussed in the OQAPD.

Regulatory Guide 1.89, Revision 1, June 1984

Qualification of Class 1E Equipment for Nuclear Power Plants

Regulatory Guide Intent:

Regulatory Guide 1.89 endorses both the requirements and recommendations of IEEE 323-1974, "IEEE Standard for Qualifying Class 1E Equipment for Nuclear Power Generating Stations." Additional regulatory position stipulations are also included.

Compliance or Alternate Approach Statement:

CGS complies with this regulatory guide for equipment requiring environmental qualification procured after February 22, 1983.

General Compliance or Alternate Approach Statement:

For equipment requiring environmental qualification installed prior to February 22, 1983, CGS follows the guidance in NUREG-0588 Cat II.

In view of the NRC Memorandum and Order (CLI-80-21), dated May 23, 1980, all environmental qualifications of Class 1E equipment located in harsh environments are reevaluated for compliance with NUREG-0588, Category II. Where significant deviation from those guidelines is found in specific equipment qualifications, additional testing and/or analysis is performed to demonstrate the adequacy of the equipment to perform its safety-related function. *For equipment whose qualification program has not been completed, a justification for interim operation in accordance with 10 CFR 50.49 is performed as described in the "WNP-2 Environmental Qualification Report for Safety-Related Equipment," Reference 3.11-1.*

Specific Evaluation Reference:

See Section 3.11.

Regulatory Guide 1.90, Revision 0, November 1974

In-Service Inspection of Prestressed Concrete Containment Structures with Grouted Tendons

Compliance or Alternate Approach Statement:

This regulatory guide is not applicable because CGS does not have a prestressed concrete containment structure with grouted tendons.

General Compliance or Alternate Approach Assessment:

Not applicable.

Specific Evaluation Reference:

Not applicable.

Regulatory Guide 1.91, Revision 0, January 1975

Evaluation of Explosions Postulated to Occur on Transportation Routes Near Nuclear Power Plant Sites

Compliance or Alternate Approach Statement:

This regulatory guide is not applicable to CGS since it applies to the evaluation of construction permit applications docketed on or after March 14, 1975. However, CGS complies with the guidance set forth in this regulatory guide.

General Compliance or Alternate Approach Assessment:

It has been determined that the peak overpressures produced by postulated explosions occurring on transportation routes near the plant are no greater than the wind pressures caused by the design basis tornado. Therefore, postulated explosions will not cause an accident or prevent the safe shutdown of the plant.

Specific Evaluation Reference:

See Sections 2.2.1, 2.2.2.2, and 2.2.2.4.

Regulatory Guide 1.92, Revision 1, February 1976

Combining Modal Responses and Spatial Components in Seismic Response Analysis

Compliance or Alternate Approach Statement:

This regulatory guide is not a requirement for CGS since it applies to the evaluation of construction permit applications docketed after February 1976. CGS complies with the intent of the guidance set forth in this regulatory guide by implementing the regulatory guide criteria or by an alternate approach.

General Compliance or Alternate Approach Assessment:

The method of combining modal responses has been implemented in accordance with the guide's recommendations.

The combining of spatial components was performed prior to the issuance of the guide and follows the method presented in the PSAR. The method used is an industry-accepted alternate method. The method considers the combination of the maximum structural responses to the more critical one of the two horizontal components and the vertical component of earthquake motion, using the absolute sum method. Alternatively, when the regulatory guide is followed, two horizontal components and one vertical component of earthquake motion are combined by the square root sum of the squares method.

Specific Evaluation Reference:

See Sections 3.7.2.6 and 3.7.2.7.

Regulatory Guide 1.93, Revision 0, December 1974

Availability of Electric Power Sources

Compliance or Alternative Approach Statement:

CGS complies with the regulatory position for operating the plant whenever the available electric power sources are less than the limiting conditions for operation (LCO) as defined in the regulatory guide.

General Compliance or Alternate Approach Assessment:

Operating procedures incorporate the requirements of this guide.

Specific Evaluation Reference:

See the Technical Specifications.

Regulatory Guide 1.94, Revision 1, April 1976

Quality Assurance Requirements for Installation, Inspection, and Testing of Structural Concrete and Structural Steel During the Construction Phase of Nuclear Power Plants.

I Design and Construction Phase

Compliance or Alternate Approach Statement:

This regulatory guide is not applicable to CGS since it applies to the evaluation of construction permits docketed after October 15, 1976. However, CGS complies with the intent of the guidance set forth in the guide.

General Compliance or Alternate Approach Assessment:

The guidelines included in ANSI 45.2.5-1974 for installation, inspection and testing of structural concrete and structural steel, including nonpressure vessel elements of the primary containment vessel during the construction phase of CGS are reflected in the structural concrete and structural steel contract specifications for project construction. The QA requirements of ANSI 45.2 were incorporated in these specifications.

Specific Evaluation Reference:

See Sections 3.8.3.2, 3.8.4.2, 3.8.5.2, and Table 3.8-4.

II Operational Phase

Compliance is discussed in the Topical Report referenced in the OQAPD.

Regulatory Guide 1.95, Revision 1, January 1977

Protection of Nuclear Power Plant Control Room Operators Against an Accidental Chlorine Release

Compliance or Alternate Approach Statement:

This regulatory guide is not applicable to CGS since chlorine gas is not stored at CGS or nearby facilities and the expected quantities of chlorine shipped within five miles is less than the threshold volumes specified in Regulatory Guide 1.78.

Specific Evaluation Reference:

See Section 6.4.4.2.

Regulatory Guide 1.97, Revision 2, December 1980

Instrumentation for Light Water Cooled Nuclear Power Plants to Assess Plant Conditions During and Following an Accident

Compliance or Alternate Approach Statement:

The CGS safety-related display instrumentation meets the intent of Regulatory Guide 1.97.

General Compliance or Alternate Approach Assessment:

Instrumentation is provided in the main control room to monitor plant variables and systems during and following an accident. The instrumentation is qualified to remain functional as required by the regulatory guide.

Portable multichannel gamma-ray spectrometer instrumentation provided for use by field teams during emergencies is not used at CGS, contrary to the recommendation contained in Regulatory Guide 1.97, Revision 2, Table 2, Plant and Environs Radioactivity (portable instrumentation). Regulatory Guide 1.97, recommends the use of these instruments for release assessment and analysis. Alternative methods that produce more reliable indication of fuel failure during a radioactive release are used instead, such as air sample analysis and validation of dose projections using field team sample results.

Deviations relative to RG 1.97 category for O2 and H2 as discussed in Section 7.5.2.2.3.

Specific Evaluation Reference:

See Section 7.5.

Regulatory Guide 1.100, Revision 1, August 1977

Seismic Qualification of Electric Equipment for Nuclear Power Plants

Regulatory Guide Intent:

Regulatory Guide 1.100 endorses both the requirements and recommendations of IEEE 344-1975, "IEEE Recommended Practices for Seismic Qualification of Class 1E Equipment for Nuclear Power Generating Stations," when such qualification is performed in conjunction with Regulatory Guide 1.89, and subject to the regulatory position stipulations.

Compliance or Alternate Approach Statement:

This regulatory guide is applicable to CGS as clarified in Section 1.8.3 for Regulatory Guide 1.89, Revision 1 and Section 3.10.1.2.

General Compliance or Alternate Approach Assessment:

All Class 1E equipment seismic qualifications are evaluated against the requirements set forth within IEEE 344-1975 as clarified in Section 3.10.1.2. The evaluations are documented and demonstrate adequacy of the methods and results of the qualifications as equal or conservative to the requirements of IEEE 344-1975. These include evaluations of seismic and hydrodynamic load combinations.

Specific Evaluation Reference:

See Section 3.10.

Regulatory Guide 1.101, Revision 1, March 1977

Emergency Planning for Nuclear Power Plants

Compliance or Alternate Approach Statement:

CGS complies with the intent set forth in this regulatory guide.

General Compliance or Alternate Approach Statement:

See NUREG-0654.

Specific Evaluation Reference:

See the CGS Emergency Plan.

Regulatory Guide 1.102, Revision 1, September 1976

Flood Protection for Nuclear Power Plants

Compliance or Alternate Approach Statement

CGS complies with the guidance set forth in this regulatory guide.

General Compliance or Alternate Approach Assessment:

The safety-related buildings and spray ponds are located far above the water level estimated for the largest historical flood. Based on the criteria stipulated in Regulatory Guide 1.102, the CGS plant site is classified as a "Dry Site."

Specific Evaluation Reference:

See Section 2.4.

Regulatory Guide 1.103, Revision 1, October 1976

Post-Tensioned Prestressed Systems for Concrete Reactor Vessels and Containments

Compliance or Alternate Approach Statement:

This regulatory guide is not applicable since CGS does not have a concrete reactor vessel or containment.

General Compliance or Alternate Approach Assessment:

Not applicable.

Specific Evaluation Reference:

Not applicable.

Regulatory Guide 1.104, Revision 0, February 1976

Overhead Crane Handling Systems for Nuclear Power Plants

Compliance or Alternate Approach Statement:

CGS complies with the intent of the guidance set forth in this regulatory guide by an alternate approach.

General Compliance or Alternate Approach

The following safeguards are included in the design of the overhead crane:

a. Redundant low limit, main hoist,

b. Redundant equalizer bar limit switch,

c. "Critical Control Path" series of limit switches for the spent fuel cask handling mode, and

d. Main hoist "paddle" type upper limit switch to prevent the inadvertent "two-blocking" condition.

Specific Evaluation Reference:

See Sections 3.8.4.1.1.5 and 9.1.4.2.2.

Regulatory Guide 1.105, Revision 1, November 1976

Instrument Setpoints

Compliance or Alternate Approach Statement:

This regulatory guide is not applicable to CGS since it applies to the evaluation of construction permit applications docketed after December 15, 1976.

General Compliance or Alternate Approach Assessment:

Instrumentation is provided in a main control room to monitor plant variables and systems. The range of instrumentation is selected to cover the anticipated ranges of variables for the following plant conditions:

a. Normal operation,
b. Anticipated operational occurrences, and
c. Accident conditions.

To ensure adequate safety, the following plant parameters and systems are monitored and provided with appropriate controls to maintain them within prescribed operating ranges:

1. Variables and systems that affect the fission process,
2. Variables and systems that affect the reactor core,
3. Reactor coolant pressure boundary, and
4. Containment and associated systems.

Specific Evaluation References:

See Section 7.1.2.5.

Regulatory Guide 1.106, Revision 1, March 1977

Thermal Overload Protection for Electric Motors on Motor Operated Valves

Compliance or Alternate Approach Statement:

This regulatory guide is not applicable to CGS since it applies to the evaluation of construction permit applications docketed after July 15, 1976. However, CGS design complies with the intent of the guidance set forth in Section C.2 of the regulatory guide.

General Compliance or Alternate Approach Assessment:

Class 1E motor-operated valve (MOV) overloads are chosen two sizes above those which would be required based on normal full load running current. The resultant overload protection (approximately 140%) permits MOV motors to operate for extended periods at moderate overloads; tripping occurs just prior to motor damages.

Specific Evaluation Reference:

See Section 8.3.1.1.9.

Regulatory Guide 1.107, Revision 1, February 1977

Qualifications for Cement Grouting for Prestressing Tendons in Containment Structures

Compliance or Alternate Approach Statement

This regulatory guide is not applicable to CGS because CGS does not have a prestressed concrete containment structure with grouted tendons.

General Compliance or Alternate Approach Assessment:

Not applicable.

Specific Evaluation Reference:

Not applicable.

DELETED.

Regulatory Guide 1.109, Revision 0, March 1976

Calculation of Annual Doses to Man From Routine Releases of Reactor Effluents.

Compliance or Alternate Approach Statement:

CGS complies with the intent of the guidance set forth in this regulatory guide using an alternate approach.

General Compliance or Alternate Approach Statement:

CGS is meeting the guidance of this regulatory guide by using Battelle Northwest models which are acceptable to the NRC.

Specific Evaluation Reference:

See Sections 11.2.3.3, 11.3.3.3, and 5.2 of the Environmental Report.

Regulatory Guide 1.110, Revision 0, March 1976

Cost-Benefit Analysis for Radwaste Systems for Light-Water-Cooled Nuclear Power Reactors

Compliance or Alternate Approach Statement:

This regulatory guide is not applicable to CGS since a cost-benefit analysis, as described in Appendix I of 10 CFR 50 Section II-D is not required for CGS.

General Compliance or Alternate Approach Assessment:

Not applicable.

Specific Evaluation Reference:

See Section 11.2.3.4.

Regulatory Guide 1.111, Revision 1, July 1977

Method for Estimating Atmospheric Transport and Dispersion of Gaseous Effluents in Routine Releases from Light-Water Cooled Reactors

Compliance or Alternate Approach Statement:

CGS complies with the intent of the guidance set forth in this regulatory guide by an alternate approach.

General Compliance or Alternate Approach Assessment:

Analyses of atmospheric transport and dispersion of gaseous effluents at CGS are performed using the standard NRC diffusion models in NUREG/CR-2919, XOQ/DOQ: Computer Program for the Meteorological, Evaluation of Routine Effluent Releases at Nuclear Power Stations, September 1982.

Specific Evaluation References:

See Section 2.3.5.

Regulatory Guide 1.112, Revision 0-R, May 1977

Calculation of Releases of Radioactive Materials in Gaseous and Liquid Effluents from Light-Water Cooled Power Reactors.

Compliance or Alternate Approach Statement:

CGS complies with the guidance set forth in this regulatory guide.

General Compliance or Alternate Approach Assessment:

The methods for calculating annual average releases of radioactive material in liquid and gaseous effluents from the plant were originally based on the GALE Code as suggested in this regulatory guide. See the sections referenced below for discussions of the methods currently used.

Specific Evaluation Reference:

See Sections 11.2.3.2 and 11.3.3.3.

Regulatory Guide 1.113, Revision 1, April 1977

Estimating Aquatic Dispersion of Effluents From Accidental and Routine Reactor Releases For the Purpose of Implementing Appendix I.

Compliance or Alternate Approach Statement:

CGS complies with the intent of the guidance set forth in this regulatory guide using an alternate approach.

General Compliance or Alternate Approach Assessment:

Routine and accidental releases of radioactive liquid, heat, and chemical discharges to the Columbia River via the CGS cooling tower blowdown line are discussed in Section 2.4.12. CGS final Environmental Report (ER) 6.1.1.1 describes in detail the advection/diffusion equations used in the near-field thermal analysis. This analysis provides dispersion characteristics, presented in ER 5.1, to 500 ft below the point of discharge. A simplified and conservative approach to estimating the far-field concentrations of routine releases is presented in ER 5.2.2. The affects of an accidental release of radioactive liquid to the ground within the CGS site area were investigated and are discussed in Section 2.4.13.3.

Specific Evaluation Reference:

See Sections 2.4.12 and 2.4.13.3 and Environmental Report Sections 5.1, 5.2.2, and 6.1.1.1.

Regulatory Guide 1.114, Revision 1, November 1976

Guidance to Operator at the Controls of a Nuclear Power Plant.

Compliance or Alternate Approach Statement:

CGS complies with the guidance set forth in this regulatory guide.

General Compliance or Alternate Approach Assessment:

Plant administrative procedures implement the requirements of this regulatory guide.

Specific Evaluation Reference:

Not applicable.

Regulatory Guide 1.115, Revision 0, March 1976

Protection Against Low-Trajectory Turbine Missiles

Compliance or Alternate Approach Statement:

This regulatory guide is not applicable to CGS since it applies to the evaluation of construction permit applications docketed after November 15, 1976.

General Compliance or Alternate Approach Assessment:

Extensive amounts of concrete used in the construction of CGS serve as radiation shielding and formidable barriers protecting essential systems from low trajectory missiles.

Specific Evaluation Reference:

See Section 3.5.1.3.

Regulatory Guide 1.116, Revision 0, June 1976

Quality Assurance Requirements for Installation, Inspection, and Testing of Mechanical Equipment and Systems

I Design and Construction Phase

Compliance or Alternate Approach Statement:

CGS complied with the intent of the guidance set forth in this regulatory guide by an alternate approach.

General Compliance or Alternate Approach Assessment:

The requirements for installation, inspection, and testing are specified in procurement documents which require a quality assurance program in compliance with ANSI N45.2.

Specific Evaluation Reference:

None

II Operational Phase

Compliance is discussed in the OQAPD.

Regulatory Guide 1.117, Revision 0, June 1976

Tornado Design Classification

Compliance or Alternate Approach Statement:

This regulatory guide is not applicable to CGS since it applies to the evaluation of construction permit applications docketed after February 15, 1977.

General Compliance or Alternate Approach Assessment:

Essential systems are protected from tornadoes by structures designed for design basis tornadoes (DBT). See Regulatory Guides 1.27 and 1.76.

Specific Evaluation Reference:

See Sections 3.3.2.4 and 9.2.5.

Regulatory Guide 1.118, Revision 0, June 1976

Periodic Testing of Electric Power and Protection Systems.

Compliance or Alternate Approach Statement:

This regulatory guide is not applicable to CGS since the construction permit for CGS was issued prior to February 15, 1977.

General Compliance or Alternate Approach Assessment:

Electric power and protection systems are tested periodically as specified in the Technical Specifications. As described in Section 13.5.2, surveillance procedures have been prepared for periodic testing of these systems.

Specific Evaluation Reference:

See the Technical Specifications.

Regulatory Guide 1.120, Revision 0, June 1976

Fire Protection Guidelines for Nuclear Power Plants

Compliance or Alternate Approach Statement:

This regulatory guide is not applicable to CGS since it applies to the evaluation of construction permit applications docketed after February 28, 1977. However, the NRC requested a reevaluation of the fire protection program of CGS and a comparison with the guidelines in Appendix A to Branch Technical Position APCSB 9.5-1, "Guidelines for Fire Protection For Nuclear Power Plants, Docketed Prior to July 1, 1976." CGS complies with the intent of the guidance set forth in Appendix A to Branch Technical Position APCSB 9.5-1.

General Compliance or Alternate Approach Assessment:

Appendix F includes the fire hazard analysis and compares in detail the fire protection provisions for CGS with the guidelines in Appendix A to Branch Technical Position APCSB 9.5-1.

Regulatory Guide 1.122, Revision 0, September 1976

Development of Floor Design Response Spectra for Seismic Design of Floor Supported Equipment or Components

Compliance or Alternate Approach Statement:

CGS complies with the intent of the guidance set forth in this regulatory guide by an alternate approach.

General Compliance or Alternate Approach Assessment:

CGS complies with some of the regulatory positions and where not in compliance, alternate methods are used as discussed in Sections 3.7.2.5 and 3.7.2.6.

Specific Evaluation Reference:

See Sections 3.7.2.5 and 3.7.2.6.

Regulatory Guide 1.123, Revision 0, October 1976

Quality Assurance Requirements for Control of Procurement of Items and Services for Nuclear Power Plants

I Design and Construction Phase

Compliance or Alternate Approach Statement:

CGS complied with the intent of the guidance set forth in this regulatory guide by an alternate approach.

General Compliance or Alternate Approach Assessment:

ANSI N45.2.13-1976, the subject of this regulatory guide, requires certain supplier selection, evaluation, and pre- and post-award activities.

Prequalification of suppliers was generally not performed. The procurement documents required prospective suppliers to submit information pertaining to experience, facilities, personnel, and quality program with their bids for evaluation prior to award of a contract.

Pre-award evaluations were restricted to the information submitted with bid and selected clarifications when an adequate evaluation could not be accomplished with the information supplied. Post-award evaluations were performed in conjunction with the quality assurance program evaluation and approval after award of a contract.

Inspection and hold points were not established through agreement with the bidder but through contract requirements to notify Energy Northwest of all inspections and tests which were selectively witnessed by Energy Northwest.

Specific Evaluation Reference:

None

II Operational Phase

Compliance is discussed in the OQAPD.

Regulatory Guide 1.124, Revision 0, November 1976

Design Limits and Loading Combinations for Class 1 Linear Type Component Supports

Compliance or Alternate Approach Statement:

This regulatory guide is not applicable to CGS since it applies to the evaluation of construction permit applications docketed after July 1, 1977. However, CGS complies with the intent of the guidance set forth in this regulatory guide by an alternate approach.

General Compliance or Alternate Approach Assessment:

Design and fabrication requirements for CGS, including those requirements for linear type components supports, are in accordance with the ASME Code Section III Subsection NF, Winter 1973 Addenda. The actual design criteria were established prior to Winter 1973 Addenda and are conservative with respect to the Winter 1973 Code. Regulatory Guide 1.124 provides design limits and appropriate combinations of loadings which reflect the requirements set forth in the 1974 Edition of the ASME Code Section III, Subsection NF, along with additional requirements. Although the detailed requirements of the regulatory guide have not been incorporated as project criteria, review of the design criteria used for CGS indicates that the intent of this regulatory guide is met.

Specific Evaluation Reference:

See Sections 3.9.3.4 and 5.4.14.

Regulatory Guide 1.125, Revision 0, March 1977

Physical Models for Design and Operation of Hydraulic Structures and Systems for Nuclear Power Plants

Compliance or Alternate Approach Statement:

The guide is not applicable to CGS since it applies to the evaluation of construction permit application docketed on or after November 1, 1977. Furthermore, the guide is not applicable to CGS for reasons stated below.

General Compliance or Alternate Approach Assessment:

Physical hydraulic model testing is not used for CGS for predicting the performance of hydraulic structures, systems, and components located outside the primary containment vessel or provided for the prevention of accidents and the mitigation of the consequences of accidents. Therefore, the details and documentation of data and studies required by the guide to support such testing is not applicable.

Specific Evaluation Reference:

Not applicable.

Regulatory Guide 1.127, Revision 0, April 1977

Inspection of Water-Control Structures Associated With Nuclear Power Plants

Compliance or Alternate Approach Statement:

This regulatory guide is not applicable to CGS since water-control structures as defined in this regulatory guide do not exist.

General Compliance or Alternate Approach Assessment:

Not applicable.

Specific Evaluation Reference:

Not applicable.

Regulatory Guide 1.128, Revision 0, April 1977

Installation Design and Installation of Large Lead Storage Batteries for Nuclear Power Plants.

Compliance or Alternate Approach Statement:

This regulatory guide is not applicable to CGS since it applies to the evaluation of construction permit applications docketed after December 1, 1977. However, CGS complies with the intent of the guidance set forth in this regulatory guide by an alternate approach.

General Compliance or Alternate Approach Assessment:

Safety-related battery installation design criteria conforms to IEEE 484-1975. A Class 1E ventilation system is also provided which is capable of limiting hydrogen concentrations to 1%.

Storage prior to installation was not in strict compliance with Section 5.1.3 of this regulatory guide. However, preoperational tests established whether or not any damage or loss of capacity resulted from storage.

Specific Evaluation Reference:

See Sections 8.3.2.1.5, 8.3.2.1.6, 8.3.2.2.1.1, and 8.3.2.2.1.2.

Regulatory Guide 1.129, Revision 0, April 1977

Maintenance, Testing, and Replacement of Large Lead Storage Batteries for Nuclear Power Plants

Compliance or Alternate Approach Statement:

Although Regulatory Guide 1.129 is not directly applicable to CGS, Energy Northwest's maintenance procedures conform to IEEE 450- 2002, "IEEE Recommended Practice for Maintenance, Testing, and Replacement of Large Lead Storage Batteries for Generating Stations and Substations." The frequency for "service" testing is in accordance with Technical Specifications or Licensee Controlled Specifications.

General Compliance or Alternate Approach Assessment:

See Section 8.3.2.1.7.

Specific Evaluation Reference:

See Section 8.3.2.1.7.

Regulatory Guide 1.137, Revision 1, October 1979

Fuel Oil Systems for Standby Diesel Generators

Compliance or Alternate Approach Statement:

CGS complies with the guidance set forth in this guide with the exception of the following:

Piping on the engine skid is ANSI B 31.1, Seismic Category I, Quality Class I, as noted in Section 9.5.4.1.

Item 11, cathodic protection surveillance. The standby diesel fuel oil storage tanks are protected with cathodic protection by anodes which are located in the near vicinity, but there are no pigtails connected to the fuel oil system piping, thus no leads to maintain. CGS does not perform the 90% distillation test before putting the fuel in the tanks as noted in Section 9.5.4.4 and the Technical Specifications.

The diesel fuel oil supply is gravity feed down to the low fuel oil alarm level. The pump suction, however, is 2.3 ft higher than the bottom of the tank. Therefore, if the transfer pump fails, the last few hours of running before the day tank is empty would be at a pump suction lift of up to 2.3 ft.

The auxiliary boiler storage tank is considered part of the diesel fuel oil system in that it is an additional diesel fuel oil storage tank. This deviates from the ANSI N195-1976 standard because of the permanent interconnection between the standby power system and the auxiliary boiler system. The auxiliary boiler storage tank and its connective piping are not Safety Class 3. The auxiliary boiler storage tank and its connecting auxiliary boiler system are not in a vital area, although ANSI N195-1976 specifies that the fuel oil system is a vital system and shall be located in a vital area. However, loss of the stored fuel oil in the auxiliary boiler storage tank or its connective piping will not affect the safety function of the diesel fuel oil system.

The diesel storage minimum required volume does not include volume for testing, as specified by ANSI N195-1976. Instead, Energy Northwest procedurally provides for makeup, as needed, during testing activities to ensure that the minimum required volume is maintained.

Specific Evaluation Reference:

See Section 9.5.4.4.

Regulatory Guide 1.143, Revision 1, October 1979

Design Guidance for Radioactive Waste Management Systems, Structures, and Components Installed in Light-Water-Cooled Nuclear Power Plants

Compliance or Alternate Approach Statement:

CGS complies with the guidance set forth in this regulatory guide.

General Compliance or Alternate Approach Assessment:

CGS began implementing the guidance set forth in this regulatory guide in July 1982. Prior to this time the solid, liquid, and gaseous radioactive waste systems were being designed and fabricated as ASME Section III, Class 3, systems. Therefore, although the guidance in the regulatory guide does not call for N-stamped components, in many cases N-stamped components are found in the radwaste systems. To avoid the confusion which may result from the implementation of this regulatory guide these systems, and components which follow the guidance found in the regulatory guide are indicated as Quality Class II+ and Code Group D+.

Specific Evaluation Reference:

See Sections 3.2.4 and 3.2.6.

Regulatory Guide 1.144, Revision 1, September 1980

Auditing of Quality Assurance Programs for Nuclear Power Plants

I Design and Construction Phase

Compliance or Alternate Approach Statement:

CGS complies with the guidance set forth in this regulatory guide as described below.

General Compliance or Alternate Approach Assessment:

Contractors and suppliers complied with the requirements imposed by procurement documents.

Energy Northwest, the architect-engineer (Burns and Roe), and the construction manager (Bechtel) complied with the guidance set forth in this regulatory guide except for the following.

The requirements of ANSI N45.2.12-1977 as modified and interpreted by the regulatory position were applied to the Bechtel quality program for safety-related items except as modified or interpreted below:

a. Reference: Standard Sections 4.3.2.4 and 4.5.1 (Investigation). As an equivalent alternative to the requirement for the audited organization to investigate any adverse audit finding to determine and schedule appropriate corrective action, Bechtel's auditing organization may determine the investigatory action and corrective action including action to prevent recurrence pertinent to adverse audit finding. These actions are agreed to by the audited organization. Further, in Section 4.5.1, as equivalent alternative to the 30-day response time, a response time appropriate to the finding is agreed to by the audited and auditing organizations.

b. Reference: Regulatory Section C.7, Standard Section 5.2 (Audit Records). Audit records shall include documents as defined in the standard and other documents if necessary to support audit findings.

Early project procurements specified audit program requirements in terms of Appendix B to 10 CFR 50 and ANSI N45.2. As appropriate, future procurements required that audit programs comply with ANSI Standard N45.2.12.

II Operational Phase

Compliance is discussed in the OQAPD.

Regulatory Guide 1.145, Revision 1, November 1982/February 1983

Atmospheric Dispersion Models for Potential Accident Consequence Assessments at Nuclear Power Plants

Regulatory Guide Intent

This guide provides acceptable methodology to determining site-specific relative concentrations for assessing the potential offsite radiological consequences of postulated accidental releases of radioactive material to the atmosphere.

Application Assessment

Assessed capability in design.

Compliance or Alternate Approach Statement:

Identified BOP scope of supply analysis, design, and/or equipment used in this facility is in full compliance with the regulatory guide.

General Compliance or Alternate Approach Assessment

Two of the procedures contained in the PAVAN code were implemented. The procedures were run with the desert sigma and with the Pasquill-Gifford sigma enabled. The most conservative χ/Q values were used in the accident analysis.

Specific Evaluation Reference:

See Section 2.3 and Chapter 15.0.

Regulatory Guide 1.146, Revision 0, August 1980

Qualification of Quality Assurance Program Audit Personnel for Nuclear Power Plants

I Design and Construction Phase

Compliance or Alternate Approach Statement:

CGS complied with the guidance set forth in this regulatory guide as described below.

General Compliance or Alternate Approach Assessment:

Energy Northwest, the architect-engineer (Burns and Roe), and the construction manager (Bechtel) complied with the guidance set forth in this regulatory guide.

Contractors and suppliers comply with the requirements imposed by procurement documents.

Early project procurements specified audit program requirements in terms of Appendix B 10 CFR 50 and ANSI N45.2. Where appropriate, future procurements required that auditor qualification comply with ANSI Standard N45.2.23.

II Operational Phase

Compliance is discussed in the OQAPD.

Regulatory Guide 1.147

Inservice Inspection of Code Case Acceptability ASME Section XI Division I.

By the reference below, the NRC approved application of Code Case N416 for CGS which at that time was not addressed in Regulatory Guide 1.147. The approval letter required that Energy Northwest document application of the code case in the FSAR.

The code case was first used for CGS in 1988 for deferral of hydrostatic testing of main steam drip line modifications.

As the code case has now been accepted by Regulatory Guide 1.147, Energy Northwest does not plan to document future use of the code case.

Reference:

Letter from T. M. Novak (NRC) to G. C. Sorensen (SS), "Use of ASME Code Case N-416 for the WNP-2, WPPSS Nuclear Project No. 2 (WNP-2)," dated August 8, 1985.

Regulatory Guide 1.155, Reissued August 1988

Station Blackout

Compliance or Alternate Approach Statement:

CGS complies with the guidance set forth in this regulatory guide.

Compliance or Alternate Approach Assessment:

Regulatory Guide 1.155 was issued to describe a method acceptable to the NRC staff for complying with the NRC regulation that requires nuclear power plants to be capable of coping with a station blackout for a specified duration. The NRC acceptance of the CGS proposed plan for providing this capability is provided in the reference.

Specific Evaluation Reference:

See Appendix 8A.

Reference:

Letter from R. R. Assa to G. C. Sorensen, "Supplemental Safety Evaluation (SSE) of the Washington Public Power Supply System Nuclear Project No. 2 (WNP-2) Station Blackout Analysis (TAC M68626)," dated June 26, 1992.

Regulatory Guide 1.160, Revision 3, May 2012

Monitoring the Effectiveness of Maintenance at Nuclear Power Plants

Compliance or Alternate Approach Statement:

CGS complies with the guidance set forth in this regulatory guide.

General Compliance or Alternate Approach Assessment:

Compliance with the guidance provided is ensured by the implementation of a maintenance program and implementing procedures at CGS.

Specific Evaluation References:

Not applicable.

Regulatory Guide 1.166, Revision 0, March 1997

Pre-Earthquake Planning and Immediate Nuclear Power Plant Operator Post-Earthquake Actions.

Compliance or Alternate Approach Statement:

CGS complies with the guidance set forth in this regulatory guide.

General Compliance or Alternate Approach Assessment:

This regulatory guide provides guidance on planning and shutdown of a nuclear power plant.

Specific Evaluation References:

See Section 3.7.4.2

Regulatory Guide 1.167, Revision 0, March 1997

Restart of a Nuclear Power Plant Shut Down by a Seismic Event.

Compliance or Alternate Approach Statement:

CGS complies with the guidance set forth in this regulatory guide.

General Compliance or Alternate Approach Assessment:

This regulatory guide provides guidance on a restart of a nuclear power plant after it has been shut down by an earthquake.

Specific Evaluation References:

See Section 3.7.4.2

Regulatory Guide 1.196, May 2003

Control Room Habitability at Light-Water Nuclear Power Reactors

Compliance or Alternate Approach Statement:

CGS complies with the guidance set forth in this regulatory guide.

General Compliance or Alternate Approach Assessment:

Compliance with the guidance provided is ensured by the implementation of a Control Room Envelope Habitability (CREH) Program and implementing procedures at CGS.

Specific Evaluation References:

Not applicable.

Regulatory Guide 1.197, May 2003

Demonstrating Control Room Envelope Integrity at Nuclear Power Reactors

Compliance or Alternate Approach Statement:

CGS complies with the guidance set forth in this regulatory guide.

General Compliance or Alternate Approach Assessment:

Compliance with the guidance provided is ensured by the implementation of a Control Room Envelope Habitability (CREH) Program and implementing procedures at CGS.

Specific Evaluation References:

Not applicable.

Chapter 2

SITE CHARACTERISTICS

TABLE OF CONTENTS

Section Page

2.1 GEOGRAPHY AND DEMOGRAPHY 2.1-1
2.1.1 SITE LOCATION AND DESCRIPTION 2.1-1
2.1.1.1 Specification of Location 2.1-1
2.1.1.2 Site Area Map 2.1-1
2.1.1.3 Boundaries for Establishing Effluent Release Limits 2.1-2
2.1.2 EXCLUSION AREA AUTHORITY AND CONTROL 2.1-2
2.1.2.1 Authority 2.1-2
2.1.2.2 Control of Activities Unrelated to Plant Operation 2.1-4
2.1.2.2.1 Industrial Development Complex 2.1-4
2.1.2.2.2 618-11 (Wye) Waste Burial Ground 2.1-4
2.1.2.3 Arrangements for Traffic Control 2.1-5
2.1.2.4 Abandonment or Relocation of Roads 2.1-5
2.1.3 POPULATION DISTRIBUTION 2.1-5
2.1.3.1 Population Within Ten Miles 2.1-6
2.1.3.2 Population Between Ten and Fifty Miles 2.1-7
2.1.3.3 Transient Population 2.1-7
2.1.3.4 Low Population Zone 2.1-7
2.1.3.5 Population Center 2.1-7
2.1.3.6 Population Density 2.1-7
2.1.4 REFERENCES 2.1-8

2.2 NEARBY INDUSTRIAL, TRANSPORTATION, AND MILITARY FACILITIES 2.2-1
2.2.1 LOCATION AND ROUTES 2.2-1
2.2.2 DESCRIPTIONS 2.2-3
2.2.2.1 Description of Facilities 2.2-3
2.2.2.2 Description of Products and Materials 2.2-6
2.2.2.3 Pipelines 2.2-7
2.2.2.4 Waterways 2.2-7
2.2.2.5 Airports 2.2-8
2.2.2.6 Projection of Industrial Growth 2.2-8
2.2.3 EVALUATION OF POTENTIAL ACCIDENTS 2.2-8
2.2.3.1 Determination of Design Basis Events 2.2-8
2.2.3.2 Effects of Design Basis Events 2.2-11
2.2.4 REFERENCES 2.2-11

Chapter 2

SITE CHARACTERISTICS

TABLE OF CONTENTS (Continued)

Section — Page

2.3 METEOROLOGY 2.3-1
2.3.1 REGIONAL CLIMATOLOGY 2.3-1
2.3.1.1 General Climate 2.3-1
2.3.1.2 Regional Meteorological Conditions for Design and Operating Bases 2.3-4
2.3.1.2.1 Severe Weather Phenomena 2.3-4
2.3.1.2.1.1 Heavy Rain, Snow, and Ice 2.3-4
2.3.1.2.1.2 Thunderstorms and Hail 2.3-4
2.3.1.2.1.3 Tornadoes 2.3-6
2.3.1.2.1.4 Strong Winds 2.3-7
2.3.1.2.1.5 High Air Pollution Potential (APP) and Dust Storm Potential 2.3-8
2.3.1.2.1.5.1 Evaluation of August 11, 1955 and January 11, 1972 Dust Storms at Hanford 2.3-11
2.3.1.2.1.5.2 Hanford Dust Storm Climatology for Design and Operating Bases ... 2.3-13
2.3.1.2.2 Design Snow Load 2.3-14
2.3.1.2.3 Meteorological Data Used for Evaluation of Ultimate Heat Sink 2.3-15
2.3.2 LOCAL METEOROLOGY 2.3-16
2.3.2.1 Data Comparisons 2.3-16
2.3.2.1.1 Winds 2.3-18
2.3.2.1.2 Moisture and Temperature 2.3-19
2.3.2.1.3 Monthly Precipitation 2.3-20
2.3.2.1.4 Fog 2.3-20
2.3.2.1.5 Stability Summaries 2.3-21
2.3.2.2 Potential Influence of the Plant and Its Facilities on Local Meteorology 2.3-22
2.3.2.3 Local Meteorological Conditions for Design and Operating Bases 2.3-23
2.3.2.4 Topographic Description 2.3-23
2.3.3 ONSITE METEOROLOGICAL MEASUREMENT PROGRAM 2.3-23
2.3.3.1 Permanent Onsite Meteorological Tower and Instrumentation Characteristics 2.3-24
2.3.3.2 Quality Assurance Program 2.3-26
2.3.3.2.1 Data Recovery During April 1, 1974 - March 31, 1976 ..... 2.3-26
2.3.3.2.2 Maintenance and Calibration 2.3-28
2.3.3.2.3 Data Processing and Analysis 2.3-28
2.3.3.2.4 Meteorological Monitoring Program During Plant Operation 2.3-29
2.3.3.3 Other Meteorological Measurement Programs Considered for the Data Comparisons 2.3-31
2.3.3.3.1 CGS Temporary Tower 2.3-31

Chapter 2

SITE CHARACTERISTICS

TABLE OF CONTENTS (Continued)

Section Page

2.3.3.3.2 Hanford Meteorological Station 2.3-31
2.3.3.4 Joint Stability - Wind Frequency Summaries 2.3-31
2.3.4 SHORT TERM DIFFUSION ESTIMATES 2.3-32
2.3.4.1 Objective 2.3-32
2.3.4.2 Exclusion Area Boundary 2.3-32
2.3.4.3 Low Population Zone 2.3-33
2.3.4.4 Control Room 2.3-33
2.3.4.5 Description of Sources 2.3-33
2.3.4.6 Control Room Intakes 2.3-34
2.3.4.7 Calculations 2.3-34
2.3.5 LONG-TERM (ROUTINE) DIFFUSION ESTIMATES 2.3-35
2.3.5.1 Objectives 2.3-35
2.3.5.2 Calculations 2.3-36
2.3.6 REFERENCES 2.3-38

2.4 HYDROLOGY ENGINEERING 2.4-1
2.4.1 HYDROLOGIC DESCRIPTION 2.4-1
2.4.1.1 Site and Facilities 2.4-1
2.4.1.2 Hydrosphere 2.4-1
2.4.2 FLOODS 2.4-4
2.4.2.1 Flood History 2.4-4
2.4.2.2 Flood Design Considerations 2.4-4
2.4.2.3 Effects of Local Intense Precipitation 2.4-5
2.4.3 PROBABLE MAXIMUM FLOOD ON STREAMS AND RIVERS 2.4-6
2.4.3.1 Probable Maximum Precipitation 2.4-7
2.4.3.2 Precipitation Losses 2.4-7
2.4.3.3 Runoff and Stream Course Models 2.4-7
2.4.3.4 Probable Maximum Flood Flow 2.4-8
2.4.3.5 Water Level Determinations 2.4-9
2.4.3.6 Coincident Wind Wave Activity 2.4-9
2.4.4 POTENTIAL DAM FAILURES, SEISMICALLY INDUCED 2.4-9
2.4.4.1 Dam Failure Permutations 2.4-10
2.4.4.2 Unsteady Flow Analysis of Potential Dam Failures 2.4-11
2.4.4.3 Water Level at Plant Site 2.4-11
2.4.5 PROBABLE MAXIMUM SURGE AND SEICHE FLOODING 2.4-11
2.4.6 PROBABLE MAXIMUM TSUNAMI FLOODING 2.4-12

Chapter 2

SITE CHARACTERISTICS

TABLE OF CONTENTS (Continued)

Section Page

2.4.7 ICE EFFECTS 2.4-12
2.4.8 COOLING WATER CANALS AND RESERVOIRS 2.4-13
2.4.9 CHANNEL DIVERSIONS 2.4-13
2.4.10 FLOODING PROTECTION REQUIREMENTS 2.4-13
2.4.11 LOW WATER CONSIDERATIONS *2.4-14*
2.4.11.1 Low Flow in Streams *2.4-14*
2.4.11.2 Low Water Resulting From Surges, Seiches, or Tsunami *2.4-15*
2.4.11.3 Historical Low Water *2.4-15*
2.4.11.4 Future Controls *2.4-16*
2.4.11.5 Plant Requirements 2.4-17
2.4.11.6 Heat Sink Dependability Requirements 2.4-17
2.4.12 DISPERSION, DILUTION, AND TRAVEL TIMES OF ACCIDENTAL RELEASES OF LIQUID EFFLUENTS IN SURFACE WATERS 2.4-17
2.4.13 GROUNDWATER 2.4-18
2.4.13.1 Description and Onsite Use 2.4-18
2.4.13.2 Sources 2.4-23
2.4.13.3 Accidental Effects 2.4-25
2.4.13.4 Monitoring or Safeguard Requirements 2.4-29
2.4.13.5 Design Bases for Subsurface Hydrostatic Loadings 2.4-29
2.4.14 TECHNICAL SPECIFICATIONS AND EMERGENCY OPERATION REQUIREMENTS 2.4-30
2.4.15 REFERENCES 2.4-30

2.5 GEOLOGY, SEISMOLOGY, AND GEOTECHNICAL ENGINEERING 2.5-1

Chapter 2

SITE CHARACTERISTICS

LIST OF TABLES

Number	Title	Page
2.1-1	Projected Population Distribution by Compass Sector and Distance from the Site	2.1-9
2.1-2	2000 Population Distribution by Compass Sector and Distance from the Site	2.1-12
2.2-1	Hanford Site Nuclear Facilities	2.2-13
2.3-1	Average and Extremes of Climatic Elements at Hanford	2.3-43
2.3-2	Average Return Period and Existing Record for Various Precipitation Amounts and Intensity During Specified Time Periods at Hanford	2.3-45
2.3-3	Miscellaneous Snowfall Statistics (1946 through 1970)	2.3-46
2.3-4	Tornado History Within 100 Miles of CGS	2.3-47
2.3-5	Monthly and Annual Prevailing Directions, Average Speeds, and Peak Gusts: 1945-1970 at HMS	2.3-48
2.3-6	Speed and Direction of Daily Peak Gusts	2.3-49
2.3-7a	CGS and HMS Hourly Meteorlogical Data, August 7-9, 1972 (Ultimate Heat Sink Studies)	2.3-51
2.3-7b	CGS Hourly Meteorological Data, July 4-12, 1975 (Ultimate Heat Sink Studies)	2.3-52
2.3-7c	CGS Hourly Meteorological Data, July 4-12, 1975 (Ultimate Heat Sink Studies)	2.3-53
2.3-7d	CGS Hourly Meteorological Data, July 4-12, 1975 (Ultimate Heat Sink Studies)	2.3-54

Chapter 2

SITE CHARACTERISTICS

LIST OF TABLES (Continued)

Number	Title	Page
2.3-7e	CGS Hourly Meteorological Data, July 4-12, 1975 (Ultimate Heat Sink Studies)	2.3-55
2.3-7f	24 Hour HMS Meteorological Profile for August 4, 1961	2.3-56
2.3-7g	Diurnal Variation in Dry Bulb and Wet Bulb Temperature for Use in Analyzing Second Through Thirtieth Day Pond Thermal Performance	2.3-57
2.3-7h	Diurnal Variation in Dry Bulb and Wet Bulb Temperature for Use in Analyzing First Through Thirtieth Day Maximum Mass Loss	2.3-58
2.3-8a	Summary of CGS Onsite Meteorological Data Collected During the First and Second Annual Cycles as Compared to Corresponding Hanford Meterological Station Data	2.3-59
2.3-8b	Frequency of Occurrence of Wind Direction Versus Speed for CGS 33-ft Level (1974-1975)	2.3-61
2.3-9	Percentage Frequency Distribution of 50-ft Wind Direction Versus Speed at HMS (1955-1970)	2.3-66
2.3-10	Percent Frequency of Occurrence of Wind Direction at the Hanford Reservation	2.3-70
2.3-11	Persistence of Wind Direction in One Sector (22.5 Degrees) from 4/74 through 3/75 at 33-ft Level	2.3-72
2.3-12	Persistence of Wind Direction in Two Sectors (45 Degrees) from 4/74 through 3/75 at CGS for 33-ft Level	2.3-74
2.3-12a	Longest Persistence of Wind Direction in One (22.5 Degrees) and Two (45 Degrees) Sectors During First and Second Annual Cycles at 33-ft Level	2.3-76

Chapter 2

SITE CHARACTERISTICS

LIST OF TABLES (Continued)

Number	Title	Page
2.3-13	Percent Frequency of Occurrence of Wind Speed at the Hanford Reservation	2.3-77
2.3-14	Diurnal Variation of 33-ft Elevation Dry Bulb Temperature (F°) at CGS and Monthly Average Dry Bulb Temperature (F°) at the Hanford Reservation	2.3-79
2.3-15	Diurnal Variation of 33-ft Elevation Wet Bulb Temperature (F°) at CGS and Monthly Average Wet Bulb Temperature (F°) at the Hanford Reservation	2.3-80
2.3-16	Diurnal Variation of 33 ft Elevation Dew Point Temperature (F°) at CGS and Monthly Average Dew Point Temperature (F°) at the Hanford Reservation	2.3-81
2.3-17	Frequency of Occurrence, Dry Bulb Temperature (F°) Versus Time of Day from 4/74 through 3/75 for 33-ft Level	2.3-82
2.3-18	Frequency of Occurrence, Wet Bulb Temperature (F°) Versus Time of Day from 4/74 through 3/75 for 33-ft Level	2.3-83
2.3-19	Frequency of Occurrence, Dew Point Temperature (F°) Versus Time of Day from 4/74 through 3/75 for 33-ft Level	2.3-84
2.3-20	Monthly Averages of Psychrometric Data Based on Period of Record (1950-1970)	2.3-85
2.3-21	Diurnal Variation of Precipitation Intensity at CGS and Monthly Total Precipitation at the Hanford Reservation	2.3-86
2.3-22	Frequency of Occurrence, Precipitation Versus Time of Day from 4/74 through 3/75 at CGS	2.3-87
2.3-22a	Annual Frequency of Occurrence of Wind Direction and Wind Speed Versus Precipitation Intensity	2.3-88

Chapter 2

SITE CHARACTERISTICS

LIST OF TABLES (Continued)

Number	Title	Page
2.3-23	Statistics on Fog at the Hanford Meteorology Station	2.3-90
2.3-24	Percent Frequency Distribution of Wind Speeds During Hourly Observations of Fog at Pasco and at HMS	2.3-91
2.3-25	Percent Frequency of Occurrence of Stability at the Hanford Reservation	2.3-92
2.3-26	Frequency of Occurrence ΔT (°F/200 ft) Versus Time of Day from 4/74 through 3/75 at CGS between 245 and 33-ft Levels	2.3-94
2.3-27	Frequency of Occurrence, Sigma (°) Versus Time of Day from 4/74 through 3/75 at CGS for 33-ft Level	2.3-95
2.3-28	Joint Frequency Distribution of Wind Speed and Direction	2.3-96
2.3-28A	Joint Frequency Distribution of Wind Speed and Direction	2.3-100
2.3-29 through 2.3-32	DELETED	
2.3-33	Exclusion Area Boundary Accident χ/Q Desert Sigmas	2.3-105
2.3-33a	Exclusion Area Boundary χ/Q Values Desert Sigmas w/ Meander	2.3-106
2.3-34	Exclusion Area Boundary Accident χ/Q P-G Sigmas	2.3-107
2.3-34a	Exclusion Area Boundary χ/Q Values Pasquill-Gifford Sigmar w/ Meander and Building Wake Credit	2.3-108
2.3-35	Low Population Zone Accident χ/Q Desert Sigmas	2.3-109
2.3-36	Low Population Zone Accident χ/Q P-G Sigmas	2.3-110
2.3-37	Control Room, Exclusion Area Boundary and Low Population Zone χ/Qs (S/m^3)	2.3-111

Chapter 2

SITE CHARACTERISTICS

LIST OF TABLES (Continued)

Number	Title	Page
2.3-38a	CGS Calculation, Terrain Features, Desert Sigmas	2.3-112
2.3-38b	CGS Calculation, Terrain Features, Desert Sigmas	2.3-113
2.3-38c	CGS Calculations, Terrain Features, Desert Sigmas	2.3-114
2.3-38d	CGS Calculation, Terrain Features, Desert Sigmas	2.3-115
2.3-38e	CGS Calculations, Terrain Features, Desert Sigmas	2.3-116
2.3-38f	CGS Calculation, Terrain Features, Desert Sigmas	2.3-117
2.3-39a through 2.3-39f	DELETED	2.3-118
2.3-40	Frequency of Wind Resuspension Periods at Hanford (1953-1970)	2.3-119
2.3-41	Dust Concentration Dependency on Wind Speed and Direction at Hanford 1953-1970	2.3-120
2.3-42	Hours Satisfying Dust Storm Criteria at Hanford (1953-1970)	2.3-121
2.4-1	Major Columbia River Basin Dams	2.4-35
2.4-2	Columbia River Temperatures Near Columbia Generating Station	2.4-36
2.4-3	Downstream Surface Water Users	2.4-37
2.4-4	Mean Discharges in CFS of Columbia River Below Priest Rapids Dam, Modified to 1970 Conditions	2.4-38
2.4-5	Dependable Yield, Columbia River Below Priest Rapids Dam, Washington	2.4-39

Chapter 2

SITE CHARACTERISTICS

LIST OF TABLES (Continued)

Number	Title	Page
2.4-6	Major Geologic Units in the Hanford Region and Their Water-Bearing Properties	2.4-40

Chapter 2

SITE CHARACTERISTICS

LIST OF FIGURES

Number	Title
2.1-1	General Area, 0-20 Miles
2.1-2	General Area, 0-50 Miles
2.1-3	Overall Site Plan
2.1-4	Project Area Map - 10 Mile Radius
2.1-5	Project Area Map - 50 Mile Radius
2.1-6	2000 Population in Communities Around Site
2.1-7	Transportation and Topographic Features of Low Population Zone
2.2-1	Hanford Reservation Road System
2.2-2	Hanford Reservation Railroad System
2.2-3	Federal Airways and Instrument Approaches/Departures
2.3-1	Rainfall Intensity, Duration, and Frequency Based on the Period 1947-69 at Hanford
2.3-2	Greatest Depth of Snow on Ground During 24 of 25 Winters of Record at Hanford 1946-47 through 1969-70
2.3-3	Distribution of Characterized Tornadoes in 20-Year Period (1950-69)
2.3-4	Peak Wind Gust Return Probability Diagram
2.3-5	Dust Occurrences Per Wind Speeds to 400 ft Heights
2.3-6	Near-Surface Airborne Dust Concentration as a Function of Average Air Velocity

Chapter 2

SITE CHARACTERISTICS

LIST OF FIGURES (Continued)

Number	Title
2.3-7	Monthly Hourly Average of Temperature and Relative Humidity (Sheets 1 through 3)
2.3-8	Probability (%) that the First Hourly Observation of an Inversion will Mark the Beginning of an Inversion Run of N Hr (Sheets 1 through 4)
2.3-9	Topographic Cross Sections of Region Surrounding Site
2.3-10	Yearly Hourly Average of Temperature and Relative Humidity
2.3-11	Cumulative (%) Frequency of Hourly Centerline χ/Q at Site Boundary Circular Distance of 1.212 Miles From Source (April 1974-March 1975)
2.3-12	Cumulative (%) Frequency of Hourly Centerline χ/Q at Site Boundary Circular Distance of 1.212 Miles From Source (April 1975-March 1976)
2.3-13	Cumulative (%) Frequency of Occurrence of χ/Q For Postulated Accidents of 8, 16, 72, and 624 Hr At Outer Boundary of LPZ (3.0 Miles from Source) (April 1974-March 1975)
2.3-14	Cumulative (%) Frequency of Occurrence of χ/Q for Postulated Accidents of 8, 16, 72, and 624 Hr at Outer Boundary of LPZ (3.0 Miles from Source) (April 1975-March 1976)
2.3-15	Annual Average χ/Q by Sector at the Site Boundary for First and Second Annual Cycle Data
2.4-1	Hydrographic Map
2.4-2	Topographic Map of Site and Surrounding Area
2.4-3	Detailed Contours Near the Site
2.4-4	Discharge and Temperature of the Columbia River at Priest Rapids
2.4-5	Columbia River Water Surface Profiles River Miles 323 to 358

Chapter 2

SITE CHARACTERISTICS

LIST OF FIGURES (Continued)

Number	Title
2.4-6	Safety-Related Building Roof Plans and Sections (Sheets 1 through 5)
2.4-7	PMF Hydrograph due to Thunderstorm PMP
2.4-8	Probable Maximum Precipitation Drainage Basin
2.4-9	Probable Maximum Precipitation Channel Cross Sections
2.4-10	Water Surface Profile
2.4-11	Effective Fetch Diagram
2.4-12	Computed Long-Term Temperature Trends on the Columbia River at Rock Island Dam (1938-1962)
2.4-13	River Elevation at Low Flows - River Mile 352
2.4-14	Duration Curves Columbia River, Priest Rapids Dam
2.4-15	Frequency Curves of High and Low Flows for the Columbia River Below Priest Rapids Dam
2.4-16	Location of Intake and Discharge
2.4-17	Monitoring Well Locations (September 1975)
2.4-18	Hanford Reservation Water Table Map (December 1975)
2.4-19	Groundwater Contours Assuming Construction of the Ben Franklin Dam
2.4-20	Hanford Reservation Water Table Map (January 1944)
2.4-21	Hydraulic Conductivities in the Unconfined Aquifer
2.4-22	Nitrate (NO_3) Concentrations (December 1976)

Chapter 2

SITE CHARACTERISTICS

LIST OF FIGURES (Continued)

Number	Title
2.4-23	Gross Beta Concentrations (December 1976)
2.4-24	Tritium (^{3}H) Concentrations (December 1976)
2.4-25	Pasco Basin Uppermost Confined Aquifer Potential Map (1970)
2.4-26	Hanford Reservation Water Table Map (September 1973)
2.4-27	Well Hydrographs (Sheets 1 and 2)
2.4-28	Site Topographic Map

Chapter 2

SITE CHARACTERISTICS

2.1 GEOGRAPHY AND DEMOGRAPHY

2.1.1 SITE LOCATION AND DESCRIPTION

2.1.1.1 Specification of Location

Columbia Generating Station (CGS) is located in the southeast area of the U.S. Department of Energy's (DOE) Hanford Site in Benton County, Washington. The site is approximately 3 miles west of the Columbia River at River Mile 352, approximately 10 miles north of north Richland, 18 miles northwest of Pasco, and 21 miles northwest of Kennewick (Figures 2.1-1 and 2.1-2).

The reactor is located at 46° 28' 18" north latitude and 119° 19' 58" west longitude. The approximate Universal Transverse Mercator coordinates are 5,148,840 meters north and 320,930 meters east.

2.1.1.2 Site Area Map

The CGS site area is that real estate over which Energy Northwest has the legal right to control access. It is the area enclosed by the exclusion area boundary plus the plant property lines as shown in Figure 3-1 of the Offsite Dose Calculation Manual (ODCM). The property line and nearby industrial facilities are shown in Figure 2.1-3. Industrial facilities located in the site area are the H. J. Ashe Substation and Energy Northwest's Nuclear Projects 1 and 4 (WNP-4 was terminated in January 1982, and WNP-1 was terminated in May 1994). Highway and railway facilities located within the site area are shown in Figure 2.1-3. The relative locations of the plant structures are shown in Figure 1.2-1.

The boundary of the exclusion area is a circle with its center at the reactor and a radius of 1950 m. Ownership and control of the land outside the CGS property line but within the site exclusion area are discussed in Section 2.1.2.

The site is situated near the middle of the relatively flat, essentially featureless plain, which is best described as a shrub steppe with sagebrush interspersed with perennial native and introduced annual grasses extending in a northerly, westerly, and southerly direction for several miles. The plain is characterized by slight topographic relief of approximately 20 ft across the plant site.

The dominant topographic features in the area are the Rattlesnake Hills, 13 to 15 miles west southwest, 3200 ft above the elevation of the plant site; Gable Mountain, approximately

10 miles northwest of the site and about 670 ft above the site grade; and the steep river cut bluffs forming the east bank of the Columbia River, approximately 3.5 miles east of the site (Figure 2.1-1).

2.1.1.3 Boundaries for Establishing Effluent Release Limits

The boundary for establishing effluent release limits (unrestricted area boundary as defined in 10 CFR Part 20) is the site area boundary as shown in the ODCM, Figure 3-1. The site area is the area enclosed by the exclusion area boundary and the plant property lines that fall outside the exclusion area. All area within the site area boundary is considered a controlled area as defined by 10 CFR 20.1003.

A number of restricted areas (as defined in 10 CFR 20.1003) are associated with CGS. The primary CGS restricted area is located within the plant security fence which also is the boundary of the protected area (as defined in 10 CFR 73.2). This is shown as the double fence line in Figure 1.2-1. Unescorted access to the protected area is controlled by CGS security staff. Other restricted areas include the Independent Spent Fuel Storage Installation, stormwater ponds, Plant Support Facility calibration laboratory, Warehouse No. 5, the cooling tower sediment disposal area, and Building 167 on the WNP-4 site. Access to these secondary restricted areas is controlled by locks and fences. Temporary restricted areas may be established and removed as dictated by activities at CGS.

2.1.2 EXCLUSION AREA AUTHORITY AND CONTROL

2.1.2.1 Authority

Energy Northwest leased 1089 acres from the DOE, within the DOE Hanford Site, to be used for CGS. A letter from the DOE Richland Operations office to the Managing Director of Energy Northwest (Reference 2.1-1) advises that the DOE has the authority to sell or lease land on the Hanford Site and the letter further states

> This Authority is contained in Section 120 of the Atomic Energy Community Act of 1955, as amended, and Section 161g of the Atomic Energy Act of 1954, as amended. There is also general federal disposal authority available under the Federal Property Administrative Services Act of 1949, as amended.

The 1950-m radius exclusion area extends beyond the CGS property lines and overlaps DOE lands as well as the additional land leased by Energy Northwest for the construction of the WNP-1 and WNP-4 projects (see Figure 2.1-3 and ODCM Figure 3-1). All land outside the Energy Northwest leased property but within the exclusion area is managed by the DOE.

In recognition of the requirement specified in 10 CFR 100.3(a) [Now 100.3] that a licensee have control over access to the exclusion area, the following terms have been incorporated as Article 7 of the site property lease agreement between Energy Northwest and the DOE (as modified in 1975):

Notwithstanding any provisions of this lease to the contrary, the Administration [Energy Research and Development Administration -- now DOE] agrees that the Supply System [now Energy Northwest] has the authority to determine all activities within the exclusion area within the meaning of 10 CFR Section 100.3(a) [Now 100.3], including the authority to remove a personnel and property from the area. The Supply System agrees that it will exercise such authority in a manner so as not to preclude the Administration from undertaking any action or activity within the exclusion area that is permissible under the provisions of 10 CFR Section 100.3(a) [Now 100.3]. As used herein, the term "exclusion area" includes both the leased and nonleased portions of the exclusion area.

Therefore, any actions such as public access and actions concerning mineral rights and easements taken within the exclusion area but outside the leased property are under the control of the DOE with the provision that Energy Northwest has the legal right to control access of individuals to the exclusion area if necessary. All rail shipments on the track which traverses the property (Figure 2.1-3) are also under control of the DOE and are also subject to the above provision and controls imposed by Energy Northwest Security.

The only paved roads that traverse the exclusion area of CGS are the CGS, WNP-1, and WNP-4 facility access roads shown in Figure 2.1-3. Access by land from outside of the Hanford Site to the plant site is over DOE roads. Travel within the exclusion area on the access roads will be under the authority of Energy Northwest.

In the event that evacuation or other control of the exclusion area should become necessary, appropriate notice will be given to the DOE-Richland Operations Office for control of non-Energy Northwest originated activities.

The above provisions provide the necessary assurance that the exclusion area is properly controlled. If Energy Northwest should decide that an easement would be useful in ensuring continued control, there is a provision in Article 5(b) of the lease as follows:

> Subject to the provisions of Section 161g of the Atomic Energy Act of 1954, as amended, the Commission has authority to grant easements for rights-of-way for roads, transmission lines and for any other purpose, and agrees to negotiate with Energy Northwest for such rights-of-way over the Hanford Operations Area as are necessary to service the Leased Premises.

Pursuant to this provision Energy Northwest could obtain an easement over the exclusion area in question from the DOE, which would ensure that no permanent structures or other activities inconsistent with the exclusion area would be carried on therein.

2.1.2.2 Control of Activities Unrelated to Plant Operation

In accordance with, and as defined by 10 CFR 100.3, Energy Northwest has the authority to determine all activities within the exclusion area, including the authority to remove all personnel and property from the area. The following activities unrelated to plant operation are permitted within the exclusion area:

2.1.2.2.1 Industrial Development Complex

Energy-Northwest is conducting site restoration and economic development (such as leasing of excess facilities for office space and manufacturing) activities at the WNP-1 and WNP-4 sites (the WNP-1 and WNP-4 sites are also leased from the DOE and controlled by Energy Northwest). The number of personnel at the WNP-1 and WNP-4 sites varies. However, coordination of activities within the exclusion area is under the control of Energy Northwest and the CGS emergency plan. This includes notification and evacuation considerations in the event of an emergency at CGS.

2.1.2.2.2 618-11 (Wye) Waste Burial Ground

The 618-11 site is a DOE waste burial ground, encompassing an eight-acre parcel directly adjacent to Energy Northwest leased land (see Figure 2.1-3) and located wholly within the CGS exclusion area. All 618-11 site activities are controlled by DOE in accordance with 10 CFR Chapter III. DOE has responsibility for the 618-11 site in accordance with 10 CFR 830.204. The soil overburden covering the caissons and vertical pipe units at the 618-11 site is identified as a passive design feature that serves a mitigative function. Existing soil overburden shall not be removed.

Following non-intrusive surveillance and characterization activities, the site was returned to inactive status.

2.1.2.3 Arrangements for Traffic Control

The only roads within the exclusion area are the Energy Northwest access roads. These roads are normally used only by employees and visitors associated with the CGS, WNP-1, and WNP-4 facilities, DOE, and DOE contractors. The security force, with offsite assistance as required, controls traffic during emergencies.

2.1.2.4 Abandonment or Relocation of Roads

There were no public roads transversing the exclusion area that had to be abandoned or relocated as a result of the construction of CGS.

2.1.3 POPULATION DISTRIBUTION

Table 2.1-1 presents the compass sector population estimates for 1980 and the forecasts for the same compass sectors by decade from 1990 to 2030.* Cumulative totals are also shown in Table 2.1-1. This table may be keyed to Figures 2.1-4 and 2.1-5, which show the sectors and major population centers within 10 and 50 miles of the site. As can be seen in Figure 2.1-6, population centers, within 50 miles of the site include the Tri-Cities area of Richland, Pasco, and Kennewick; Moses Lake; Hermiston; and the communities lying along the Yakima River from Prosser to Toppenish. Figure 2.1-4 shows that there are no towns located within 10 miles of the site, with the exception of a small part of Richland.

The 1990 to 2030 forecasts presented here (Reference 2.1-2) are based on

a. 1979 population figures provided by the Washington State Office of Financial Management,

b. Benton and Franklin County Traffic Analysis Zone population distributions,

c. Computed annual average area growth rates from 1975 through 1979 which were utilized to obtain the total 1980 population estimated for each area, and

d. County forecasts prepared by the Bonneville Power Administration. (References 2.1-3 and 2.1-4).

Table 2.1-2 presents the compass sector population estimates for 2010 based on U.S. Census Bureau data (Reference 2.1-5). See also Figures 2.1-4 and 2.1-5.

2.1.3.1 Population Within Ten Miles

An estimated 3000 people live within 10 miles of the site. The nearest inhabitants occupy farms which are located east of Columbia River and are thinly spread over five compass sectors. There are no permanent inhabitants located within 3 miles of the site.

No significant changes in land use within five miles are anticipated. The Hanford Site is expected to remain dedicated primarily to industrial use without private residences. No change in the use of the land east of the Columbia River is expected since it currently is irrigated to

---

* Population estimates out to 50 miles were derived to serve the licensing requirements of WNP-1, CGS, and WNP-4. Therefore, estimates were made relative to the centroid of the triangle formed by the three reactors. This point is located 2800 ft east of CGS and has coordinates longitude 119° 19' 18" west, latitude 46° 28' 19" north. This shift does not affect the overall accuracy or applicability of the population distribution projections.

about the maximum amount practicable. The primary increase in population within the 10-mile radius is expected to be in the area south and south-southeast of the plant (see Figure 2.1-4).

2.1.3.2 Population Between Ten and Fifty Miles

As indicated in Table 2.1-2, about 450,000 people were estimated to be living within a 50-mile radius of CGS in 2010. Projections for the 10-50 mile region are shown in Table 2.1-1 which is based on earlier (1979-1980) population counts.

2.1.3.3 Transient Population

The transient population consists of agricultural workers needed for harvesting crops produced in the region, industrial and construction workers, and sportsmen engaged in hunting, fishing, and boating. A description of the transient population is discussed in Section 5.6 of the CGS Emergency Plan.

2.1.3.4 Low Population Zone

The low population zone (LPZ) [see 10 CFR 100.3(b)] for CGS is defined as all land within a 3-mile radius of the reactor. This LPZ was selected on the basis that it is not expected to have a large population in the future and that effective protective measures could be established. As shown in Table 2.1-2, no permanent residents are located within a 3-mile radius of the reactor, and none are anticipated in the future.

There are no public facilities or institutions such as schools and hospitals within a 3-mile radius of the plant. The transportation facilities and topographic features of the LPZ are shown in Figure 2.1-7.

2.1.3.5 Population Center

The nearest population center is the City of Richland, 12 miles to the south.

2.1.3.6 Population Density

In 2000, the population densities within the 10, 20, and 30-mile radii were 9, 96, and 73 people per square miles, respectively. In 2030, the densities out to the same distances are estimated to be 13, 123, and 84, respectively, based on the projections in Table 2.1-1.

2.1.4 REFERENCES

2.1-1 Letter from Atomic Energy Commission, Richland Operations Office, to Managing Director of the Supply System, Washington Public Power Supply System, Subject: Appendix 2P, November 25, 1970.

2.1-2 Yandon, K. E., Projections and Distributions of Populations Within a 50-Mile Radius of Washington Public Power Supply System Nuclear Projects Nos. 1, 2, and 4 by Compass Direction and Radii Intervals, 1970-2030, October 1980.

2.1-3 Bonneville Power Administration, U.S. Department of Energy, Washington, Subject: Population, Employment and Household Projections to 2000 by County, July 1979.

2.1-4 Bonneville Power Administration, U.S. Department of Energy, Oregon Population, Employment and Household Projections to 2000 by County.

2.1-5 Washington State Office of Financial Management, Forecasting Division (2012). Small Area Estimate Program: Census Block Groups [SAEP_ColGenFac_Sectors_2000-2012.xls]. Via communication with M. Mohrman, Washington Office of Financial Management, July 2013; Oregon Population Data Estimates 2010 provided by Portland State University, Population Research Center, C. Rynerson, in collaboration with the M. Mohrman at Washington State Office of Financial Management, March 2014.

Table 2.1-1

Projected Population Distribution by Compass Sector and Distance from the Site

Distance Cumulative (miles)	Direction (compass segment)	1980		1990		2000		2010		2020		2030	
		Number	Cumulative Total	Number	Cumulative Total	Number	Cumulative Total	Number	Cumulative Total	Number	Cumulative Total	Number	Cumulative Total
0-3	All	0	0	0	0	0	0	0	0	0	0	0	0
3-5	N-NNE	0	0	0	0	0	0	0	0	0	0	0	0
	NE	10	10	35	35	48	48	52	52	55	55	86	86
	ENE	22	32	43	78	56	104	60	112	63	118	64	150
	E	22	54	43	121	56	160	60	172	63	181	64	214
	ESE	22	76	43	164	56	216	60	232	63	244	64	278
	SE	4	80	6	170	9	225	11	243	11	255	12	290
	SSE-NNW	0	80	0	170	0	225	0	243	0	255	0	290
5-10	N	26	106	58	228	77	302	83	326	87	342	88	378
	NNE	83	189	126	354	152	454	162	488	170	512	172	550
	NE	155	344	198	552	224	678	240	728	252	764	254	804
	ENE	114	458	157	709	177	855	190	918	200	964	202	1006
	E	135	593	200	909	257	1112	276	1194	290	1254	293	1299
	ESE	168	761	276	1185	341	1453	366	1560	385	1639	389	1688
	SE	190	951	406	1591	536	1989	575	2135	604	2243	610	2298
	SSE	45	996	253	1844	308	2297	330	2465	347	2590	350	2648
	S	50	1046	272	2116	483	2780	518	2983	544	3134	550	3198
	SSW	235	1281	535	2651	809	3589	867	3850	911	4045	920	4118
	SW	25	1306	25	2676	25	3614	27	3877	28	4073	29	4147
	WSW-NNW	0	1306	0	2676	0	3614	0	3877	0	4073	0	4147
10-20	N	332	1638	371	3047	398	40112	427	4304	449	4522	454	4601
	NNE	328	1966	371	3418	397	4409	426	4730	447	4969	452	5053
	NE	399	2365	562	3980	588	4997	630	4360	662	5631	669	5722
	ENE	792	3157	835	4815	855	5852	917	6277	964	6595	974	6696
	E	461	3618	479	5294	544	6396	583	6860	613	7208	619	7315
	ESE	192	3810	430	5724	576	6972	618	7478	650	7858	657	7972
	SE	4155	7965	5221	10945	5821	12793	6242	13720	6561	14419	6627	14599
	SSE	49178	57143	63483	74428	70917	83710	76043	89763	79932	94351	80734	95333
	S	28943	86086	37672	112100	45434	129144	48717	138480	51208	145559	51722	147055
	SSW	1592	87678	1772	113872	1922	131066	2061	140541	2166	147725	2188	149243
	SW	3106	90784	3597	117469	894	134960	4175	144716	4389	152114	4433	153676
	WSW	950	91734	1048	118517	1108	136068	1188	145904	1248	153362	1260	154936
	W	0	91734	0	118517	0	136068	0	145904	0	153362	0	154936
	WNW	0	91734	0	118517	0	136068	0	145904	0	153362	0	154936
	NW	0	91734	0	118517	0	136068	0	145904	0	153362	0	154936
	NNW	0	91734	0	118517	0	136068	0	145904	0	153362	0	154936

Table 2.1-1

Projected Population Distribution by Compass Sector and Distance from the Site (Continued)

Distance Cumulative (miles)	Direction (compass segment)	1980		1990		2000		2010		2020		2030	
		Number	Cumulative Total	Number	Cumulative Total	Number	Cumulative Total	Number	Cumulative Total	Number	Cumulative Total	Number	Cumulative Total
20-30	N	1501	93235	1837	120354	2055	138123	2203	148107	2316	155678	2339	157275
	NNE	5759	98994	6487	126841	7123	145246	7638	155745	8029	163707	8110	165385
	NE	2015	101009	2174	129015	2274	147520	2438	158183	2563	166270	2589	167974
	ENE	1717	102726	1760	130775	1786	149306	1915	160098	2013	168283	2033	170007
	E	151	102877	194	130969	220	149526	236	160334	248	168531	250	170257
	ESE	153	103030	240	131209	305	149831	327	160661	344	168875	348	170605
	SE	6138	109168	6512	137721	6738	156569	7225	167886	7594	176469	7670	178275
	SSE	24116	133284	32559	170280	36360	192929	38987	206873	42032	218501	42454	220729
	S	187	133471	678	170958	975	193904	1045	207918	1098	219599	1109	221838
	SSW	875	134346	1218	172176	1426	195330	1529	209447	1607	221206	1623	223461
	SW	6165	140511	7147	179323	7737	203067	8296	217743	8720	229926	8808	232269
	WSW	1626	142137	1799	181122	1908	204975	2046	219789	2151	232077	2173	234442
	W	1191	143328	1325	182447	1429	206404	1532	221321	1610	233687	1626	236068
	WNW	185	143513	280	182727	297	206701	318	221639	334	234021	338	236406
	NW	40	143553	44	182771	48	206749	51	221690	54	234075	55	236461
	NNW	182	143735	200	182971	218	206967	234	221924	246	234321	249	236710
30-40	N	980	144715	1096	184065	1127	208094	1208	223132	1270	235591	1283	237993
	NNE	3198	147913	3663	187728	3983	212077	4271	227403	4490	240081	4536	242529
	NE	650	148563	800	188528	745	212822	799	228202	846	240927	850	243379
	ENE	421	148984	447	188975	475	213297	509	228711	535	241462	540	243919
	E	128	149112	136	189111	141	213438	152	228863	160	241622	162	244081
	ESE	167	149279	176	189287	182	213620	195	229058	205	241827	208	244289
	SE	464	149743	484	189771	497	214117	533	229591	560	242387	566	244855
	SSE	592	150335	844	190615	955	215072	1023	230615	1076	243463	1087	245942
	S	4680	155015	5653	196268	6368	221440	6828	237442	7172	250635	7250	253192
	SSW	256	155271	424	196692	529	221969	567	238009	596	251231	602	253794
	SW	473	155744	661	197353	786	222755	842	238851	885	252116	894	254688
	WSW	21871	177615	24729	222082	26890	249645	28833	267684	30362	282478	30665	285353
	W	3578	181193	3949	226031	4273	253918	4582	272266	4816	287294	4864	290217
	WNW	1399	182592	1459	227490	1579	255497	1693	273959	1780	289074	1798	292015
	NW	703	183295	770	228260	836	256333	896	274855	942	290016	952	292967
	NNW	1575	184870	1738	229998	1899	258232	2036	276891	2140	292156	2161	295128
40-50	N	17872	202742	19730	249728	21572	279804	23130	300021	24312	316468	24556	319684
	NNE	893	203635	1019	250747	1121	280925	1202	301223	1263	317731	1275	320959
	NE	926	204561	1139	251886	1275	282200	1367	302590	1437	319168	1451	322410
	ENE	213	204774	243	252129	375	282575	402	302992	423	319591	427	322837
	E	241	205015	258	252387	268	282843	287	303279	302	319893	305	323142
	ESE	864	205879	925	253312	961	283804	1030	304309	1083	320976	1095	324237

Table 2.1-1

Projected Population Distribution by Compass Sector and Distance from the Site (Continued)

Distance Cumulative (miles)	Direction (compass segment)	1980		1990		2000		2010		2020		2030	
		Number	Cumulative Total	Number	Cumulative Total	Number	Cumulative Total	Number	Cumulative Total	Number	Cumulative Total	Number	Cumulative Total
40-50 (cont.)	SE	2084	207963	2245	25557	2349	286153	2518	306827	2646	323622	2673	326910
	SSE	1740	209703	1920	257477	2072	288225	2222	309049	2336	325958	2359	329269
	S	16540	226243	16406	273883	17708	305933	18987	328036	19958	345916	20158	349427
	SSW	2610	228853	2895	276778	2972	308905	3186	331222	3349	349265	3428	352855
	SW	421	229274	443	277221	476	309381	509	331731	535	349800	541	353396
	WSW	809	230083	892	278113	965	310346	1035	332766	1088	350888	1099	354495
	W	18515	248598	20481	298594	22176	332525	23780	356546	24996	375884	25247	379742
	WNW	1742	250340	1903	300497	2043	334568	2191	358737	2303	378187	2326	382068
	NW	812	251152	859	301356	905	335473	970	359707	1020	379207	1030	383098
	NNW	532	251684	587	301943	642	336115	688	360395	723	379930	730	383828

Table 2.1-2

2010 Population Distribution by Compass Sector and Distance from the Site

Distance (miles)	Direction (compass segment)	2010 Population	Distance (miles)	Direction (compass segment)	2010 Population	Distance (miles)	Direction (compass segment)	2010 Population
0-3	ALL	0	5-10	N	16	10-20	N	136
			5-10	NNE	78	10-20	NNE	742
3-4	NNE	0	5-10	NE	248	10-20	NE	1699
3-4	ENE	0	5-10	ENE	213	10-20	ENE	934
3-4	E	1	5-10	E	298	10-20	E	680
3-4	ESE	0	5-10	ESE	308	10-20	ESE	513
3-4	SE-NNW	0	5-10	SE	588	10-20	SE	16219
			5-10	SSE	239	10-20	SSE	95379
4-5	NNE	1	5-10	S	376	10-20	S	38669
4-5	NE	18	5-10	SSW	548	10-20	SSW	7516
4-5	ENE	19	5-10	SW	16	10-20	SW	1232
4-5	E	27	5-10	WSW-NW	0	10-20	WSW	11
4-5	ESE	25	5-10	NNW	1	10-20	WNW	0
4-5	SE	0				10-20	NNW	1
4-5	SSE-NNW	0				10-20	NW - W	0
0-5	TOTAL	91	0-10	TOTAL	3020	0-20	TOTAL	166751
20-30	N	1098	30-40	N	1138	40-50	N	37171
20-30	NNE	13285	30-40	NNE	3802	40-50	NNE	782
20-30	NE	1237	30-40	NE	210	40-50	NE	705
20-30	ENE	3638	30-40	ENE	302	40-50	ENE	164
20-30	E	53	30-40	E	121	40-50	E	48
20-30	ESE	509	30-40	ESE	686	40-50	ESE	188
20-30	SE	18611	30-40	SE	343	40-50	SE	1415
20-30	SSE	50050	30-40	SSE	201	40-50	SSE	310
20-30	S	1710	30-40	S	8330	40-50	S	30053
20-30	SSW	131	30-40	SSW	236	40-50	SSW	5441
20-30	SW	11225	30-40	SW	1552	40-50	SW	217
20-30	WSW	1475	30-40	WSW	41107	40-50	WSW	4428
20-30	W	50	30-40	W	934	40-50	W	22691
20-30	WNW	205	30-40	WNW	6111	40-50	WNW	26
20-30	NW	611	30-40	NW	2478	40-50	NW	619
20-30	NNW	443	30-40	NNW	3870	40-50	NNW	1622
0-30	TOTAL	271082	0-40	TOTAL	342503	0-50	TOTAL	448383

Table based on April 2010 Census Bureau counts.

Amendment 55
May 2001

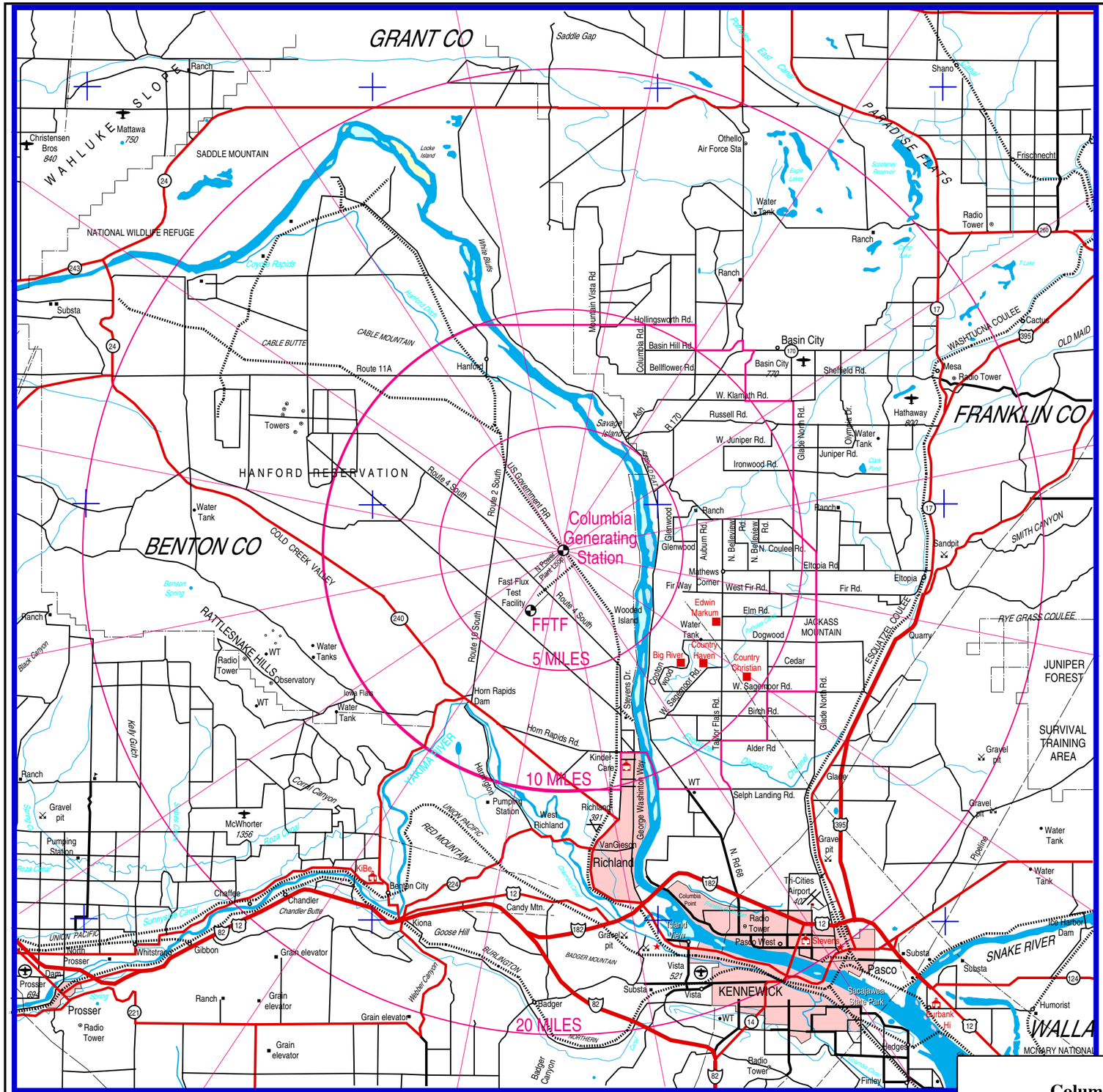

SCALE

5 0 5 10 15 20 Statute Miles

5 0 5 10 15 20 25 30 Kilometers

LEGEND

- Heavy Duty Road
- Medium Duty Road
- Light Duty Road
- Railroad
- Pipeline
- Powerline
- Latitude/Longitude
- Populated Places
- Radio Tower, Well
- Sandpit or Gravelpit
- Park or Reservation Boundary
- Landplane Airport
- Landing Area
- Federal Route Marker
- State Route
- Interstate Route
- Emergency Center

Columbia Generating Station
Final Safety Analysis Report

General Area, 0 - 20 Miles

Draw. No.	990306.20	Rev.	Figure	2.1-1

Form No. 960690

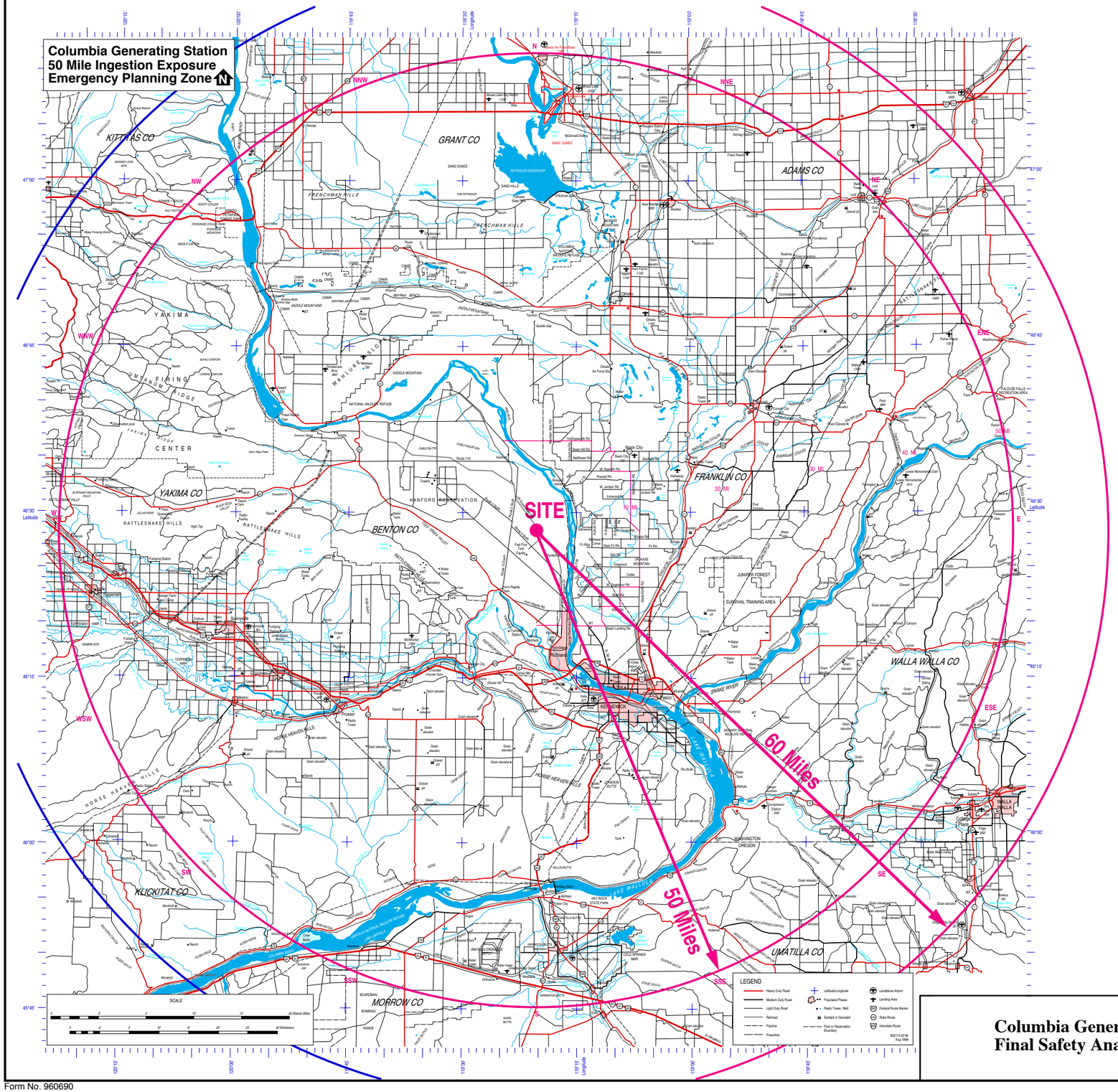

Columbia Generating Station
Final Safety Analysis Report

General Area, 0 - 50 Miles

Draw. No. 990306.60	Rev.	Figure 2.1-2

Form No. 960690

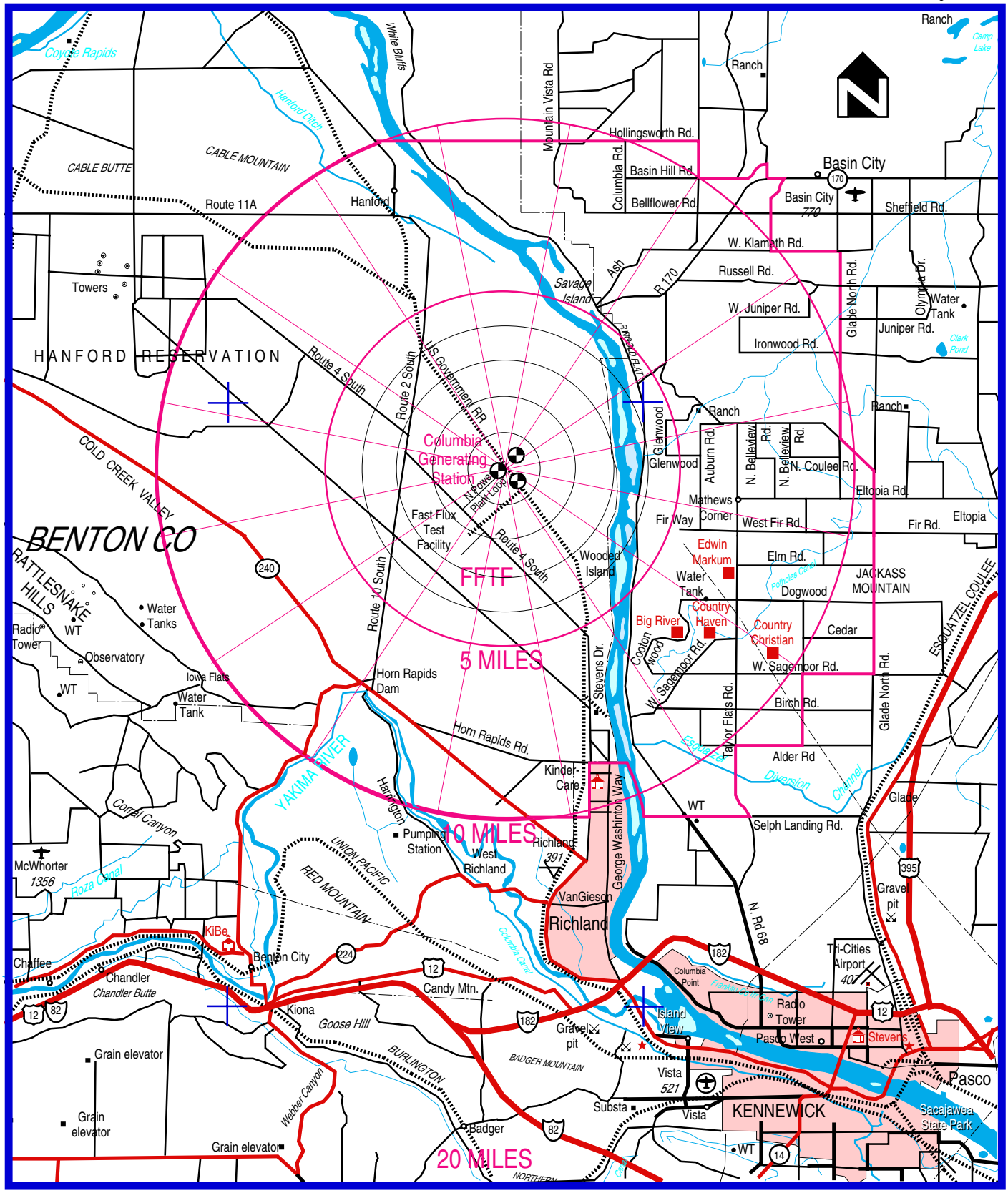
HANFORD RESERVATION
BENTON CO
Columbia Generating Station
N. Power Plant Loop
Fast Flux Test Facility
FFTF
5 MILES
10 MILES
20 MILES
Route 4 South
Route 2 South
Route 10 South
US Government RR
Horn Rapids Dam
Horn Rapids Rd.
YAKIMA RIVER
Wooded Island
Savage Island
Columbia River
Hanford
Route 11A
CABLE BUTTE
CABLE MOUNTAIN
COLD CREEK VALLEY
RATTLESNAKE HILLS
Coyote Rapids
White Bluffs
Hanford Ditch
Towers
Water Tanks
Radio Tower
WT
Observatory
Iowa Flats
Water Tank
Corral Canyon
McWhorter
1356
Roza Canal
Chaffee
Chandler
Chandler Butte
KiBe
Benton City
Kiona
Goose Hill
Grain elevator
Grain elevator
Grain elevator
Webber Canyon
Candy Mtn.
UNION PACIFIC
RED MOUNTAIN
Harrington
Pumping Station
West Richland
Richland
391
VanGieson
George Washington Way
Kinder-Care
Columbia Canal
Columbia Point
Island View
Gravel pit
BADGER MOUNTAIN
Badger
Substa
Vista
521
Vista
KENNEWICK
Pasco West
Radio Tower
Tri-Cities Airport
401
Gravel pit
N. Rd 68
Pasco
Sacajawea State Park
Stevens
Stevens Dr.
Taylor Flats Rd.
Alder Rd
Birch Rd.
W. Sagemoor Rd.
Cedar
Dogwood
Country Christian
Country Haven
Big River
Edwin Markum
Water Tank
Elm Rd.
JACKASS MOUNTAIN
ESQUATZEL COULEE
Esquatzel Diversion Channel
Glade
Glade North Rd.
Selph Landing Rd.
Fir Way
Mathews Corner
West Fir Rd.
Fir Rd.
Eltopia
Eltopia Rd.
N. Coulee Rd.
N. Belleview Rd.
Auburn Rd.
Glenwood
Ranch
Ironwood Rd.
Juniper Rd.
W. Juniper Rd.
Russell Rd.
W. Klamath Rd.
Sheffield Rd.
Basin City
770
Basin Hill Rd.
Bellflower Rd
Hollingsworth Rd.
Columbia Rd.
Mountain Vista Rd
R 170
Ash
Glade North Rd.
Olympia Dr.
Water Tank
Clark Pond
Camp Lake
Ranch
Ranch
Ranch

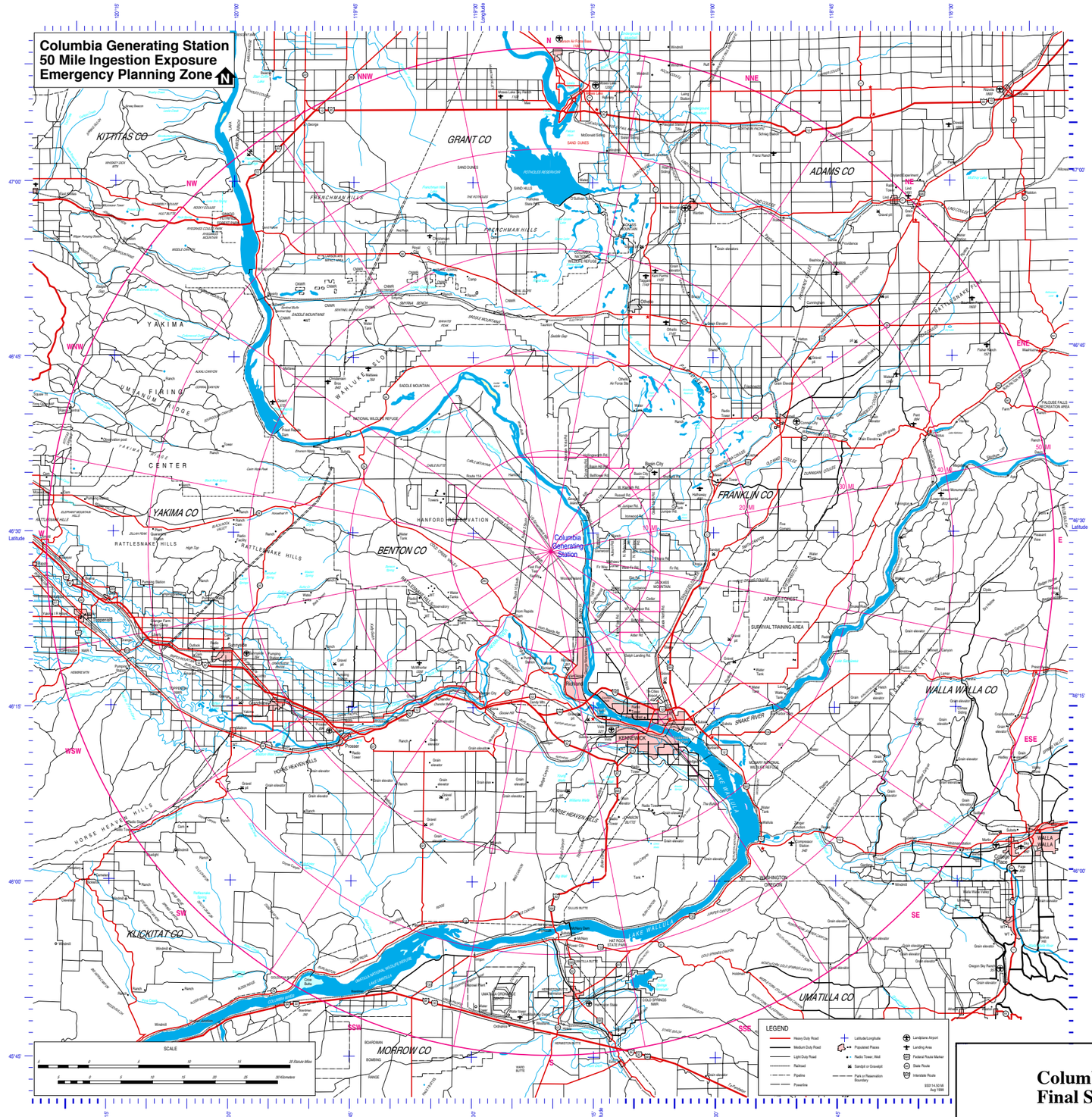

Columbia Generating Station **Final Safety Analysis Report**	**Project Area Map - 50 Mile Radius**		
	Draw. No. 990306.50	Rev.	Figure 2.1-5

Form No. 960690

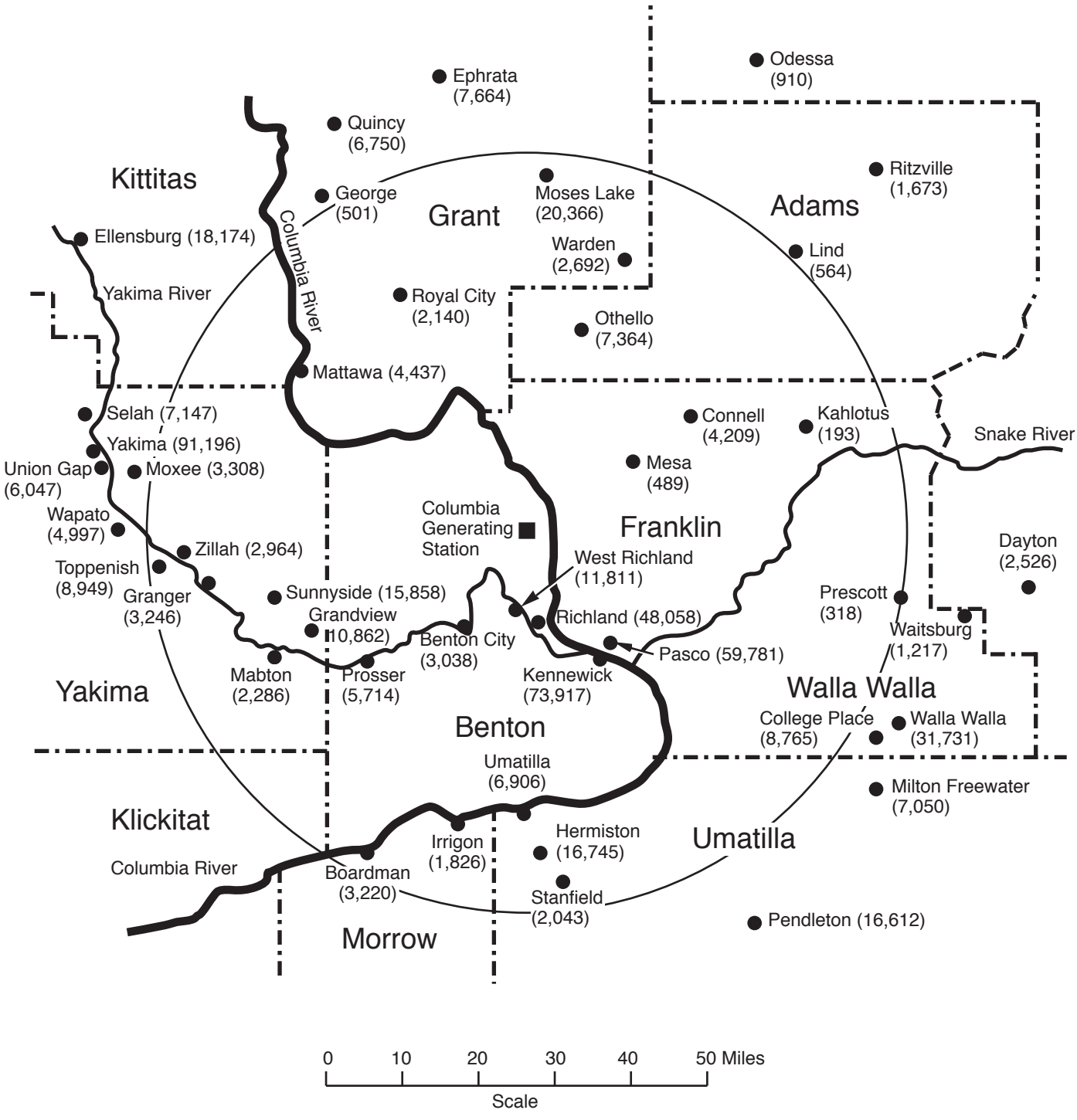

Columbia Generating Station **Final Safety Analysis Report**	**2010 Population in Communities Around Site**		
	Draw. No. **970187.14**	Rev. **1**	Figure **2.1-6**

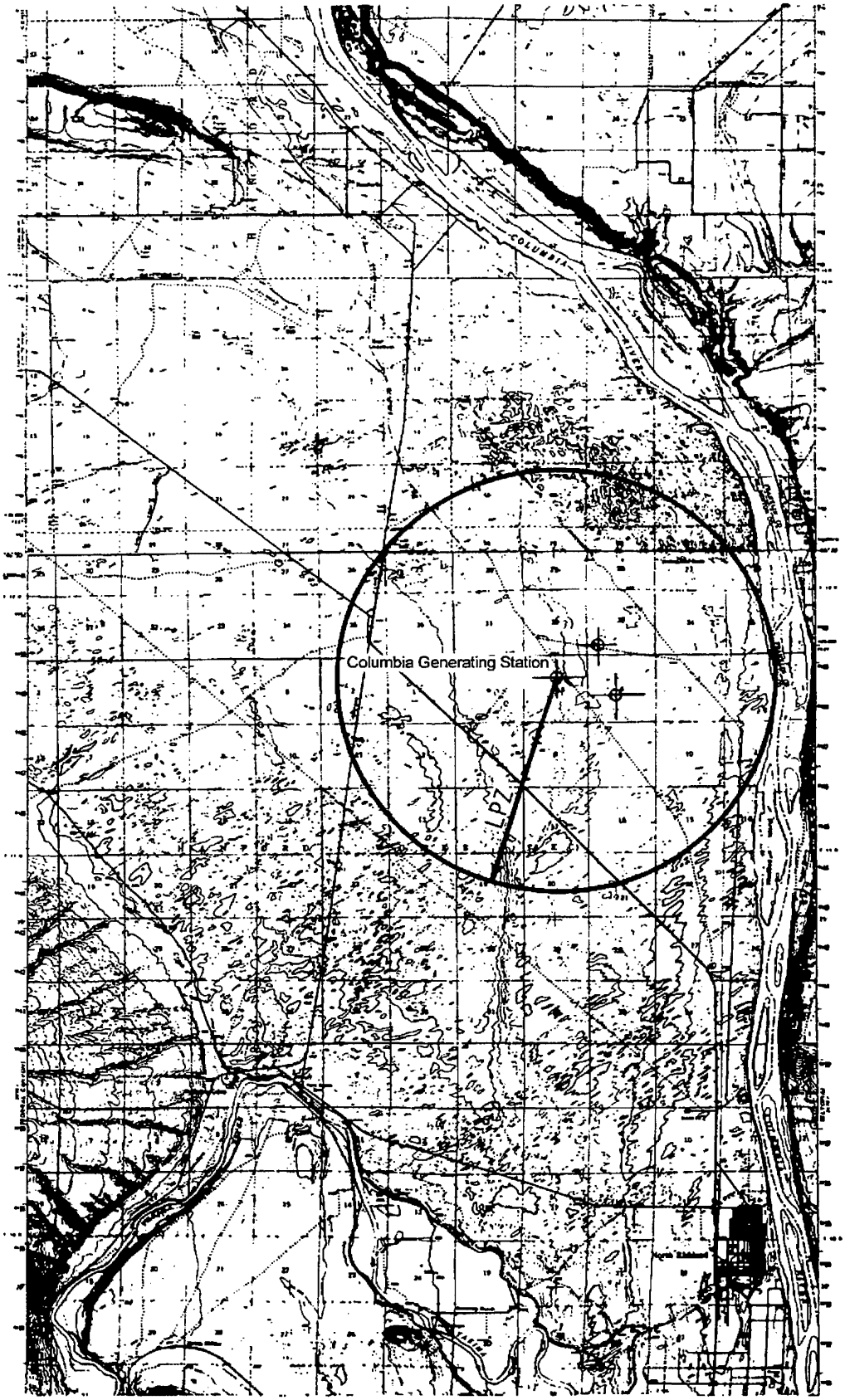

Columbia Generating Station
Final Safety Analysis Report

Transportation and Topographic Features of Low Population Zone

Draw. No. 020361.01	Rev.	Figure 2.1-7

2.2 NEARBY INDUSTRIAL, TRANSPORTATION, AND MILITARY FACILITIES

This section describes the industrial, transportation, and military installations and operations in the vicinity of the site which may have a potential effect on the safe operation of Columbia Generating Station (CGS).

2.2.1 LOCATION AND ROUTES

There are no military bases, missile sites, manufacturing plants, chemical plants, commercial chemical storage facilities, or airports within a 5-mile radius of the site. A security barrier completely surrounds the station and its major supporting facilities to keep unauthorized vehicles a safe distance from critical structures.

According to the Richland Operations Office of the Department of Energy (DOE) (Reference 2.2-1), there are no plans for petrochemical storage facilities, airports, oil and gas pipelines, or petrochemical tank farms on the Hanford Site. Plans for modifications to or new radiological material treatment or storage facilities are discussed in Section 2.2.2.

As shown in Figure 2.1-3, the following facilities are located at or near the CGS site:

- Energy Northwest Plant Engineering Center,
- H. J. Ashe Substation,
- DOE Fast Flux Test Facility (FFTF),
- WNP-1 and WNP-4 sites,
- DOE 618-11 (Wye) radioactive waste burial ground,
- Permanent meteorological tower,
- Independent Spent Fuel Storage Installation (ISFSI), and
- Hydrogen Storage and Supply Facility.

Other facilities that are located within a 5-mile radius of the site include:

- The Plant Support Facility/Emergency Operation Facility which is located 0.75 miles southwest of CGS on Energy Northwest property,

- The Benton Substation which is located 3 miles east-southeast of CGS on DOE property,

- The Laser Interferometer Gravitational-Wave Observatory (LIGO) which is located approximately 3.3 miles west-southwest of CGS on DOE property, and

- The DOE 618-10 (300 North) radioactive waste burial ground which is located approximately 3.5 miles south of CGS on DOE property.

Transportation needs of CGS can be met by existing barge, rail, and highway facilities. Barges of up to 3000 tons capacity can be accommodated on the Columbia River within the Hanford Site. A barge unloading facility 9 miles south of the plant was used for delivery of large construction items for the DOE FFTF and Energy Northwest nuclear projects. These materials were transported by truck or rail to the construction sites from the Port of Benton landing.

The CGS site is serviced by a two-lane paved access road connected to Hanford Site Route 4, which is a paved four-lane major artery located 1.6 miles west of the station. Route 4 is part of the DOE road system. The DOE-owned road system connects the areas of the Hanford Site with paved two-lane and four-lane primary roads, secondary gravel roads, and unimproved roads. State Highway 240 traverses the Hanford Site from the southeast to the northwest. The highway passes within about 7 miles of CGS in the southwest quadrant. The highway connects into State Highway 24, which goes west to Yakima, Washington, and across the Vernita Bridge on the Columbia River 22 miles to the northwest (see Figure 2.2-1).

The Hanford Site (DOE) railroad system (see Figure 2.2-2) connects with commercial rail systems in Richland and Kennewick, Washington. Railroad operations that pass through CGS property are restricted to only those trains that have been authorized by Energy Northwest Security. The rail line is physically blocked at the two points where the plant vehicle barrier crosses the tracks.

Heavy barge traffic north of the Port of Benton dock is not feasible because the river channel is too shallow and the current is too swift. The environmental impact and economic cost of constructing a new barge slip at some upstream location and channeling the river cannot presently be justified with the availability of land transportation between the Port of Benton facility and the Hanford Site.

Making the Columbia River navigable for barges from north of Richland to Wenatchee would result in barge traffic past the CGS site at River Mile 352. However, this situation would not likely occur. Locks or other lift facilities would have to be constructed at the Priest Rapids, Wanapum, and Rock Island Dams. Furthermore, in 2000, a presidential executive order created the Hanford Reach National Monument, protecting the 51-mile Hanford Reach of the Columbia River (Reference 2.2-2). The protected area includes a ¼-mile-wide corridor on the west side of the river in the vicinity of CGS.

Airports, military facilities, low-level Federal airways, and airport instrument approaches in the vicinity of CGS are discussed in Section 3.5.1.6 and shown in Figure 2.2-3.

An explosives and ordinance test site operated by Pacific Northwest National Laboratory approximately 13 miles northwest of the site was abandoned in mid-1975 (Reference 2.2-3). Explosives for operations such as quarrying or seismic studies on the Hanford Site are brought to the blasting site as needed and unused quantities are removed. Normally the only explosives

stored on the Hanford Site are small arms ammunition for use by the security patrols. A small arms firing range used for training by the DOE security patrol is located 8 miles due south of the plant (Reference 2.2-3). Another range, used by Energy Northwest security personnel, is located on Energy Northwest lease property.

2.2.2 DESCRIPTIONS

2.2.2.1 Description of Facilities

Energy Northwest's Plant Engineering Center is located west of the CGS turbine generator building as shown in Figure 1.2-1. It is a two-story, 100,000 ft^2 facility designed to house approximately 470 CGS plant staff personnel.

The H. J. Ashe Substation is located approximately 0.5 mile north of CGS and is operated by the Bonneville Power Administration as part of its transmission system.

The Energy Northwest permanent meteorological tower is located less than 0.5 mile west of the plant site. The tower is automated so that the only personnel at the tower are those required to make adjustments to the instruments or to perform repairs to the system. There are no permanent personnel at the facility.

The ISFSI is located immediately north-northwest of the plant. Confinement of all radioactive materials at the ISFSI is provided by the required use of NRC certified spent fuel storage casks listed in 10 CFR 72.214. The ISFSI storage cask system consists of an inner stainless steel multi-purpose canister (MPC) and an outer storage overpack. The MPC contains the spent fuel. It is a welded pressure vessel with no bolted closure or mechanical seals. Primary closure welds are examined and leakage tested to ensure their integrity. The MPC redundant closures are designed to maintain confinement integrity during normal conditions of storage, and off-normal and postulated accident conditions. The outer storage overpack is fabricated from concrete and structural steel components that are classified as important to safety. A fully loaded spent fuel storage cask weighs approximately 185 tons. The spent fuel loaded storage casks are located within the Energy Northwest ISFSI protected area which is surrounded by a fence and topped with barbed wire. The ISFSI access gates are locked except when in use.

The Hydrogen Storage and Supply Facility is located 0.6 miles south-southeast of the plant site. The facility is part of a hydrogen water chemistry system to prevent and mitigate intergranular stress corrosion cracking in reactor internal structures and piping welds. The facility consists of a fenced gravel yard with concrete pads constructed to accommodate a liquid hydrogen tank, nitrogen tank, gaseous hydrogen tubes, and all supporting piping and equipment necessary to supply CGS with gaseous hydrogen. The liquid and compressed gases are delivered to the facility by truck.

Within the exclusion area radius of 1950 m is Energy Northwest's 1250-MWe WNP-1 project. Construction of the PWR plant, located 1500 m (4925 ft) east-southeast of CGS, was suspended in April 1982. In May 1994 the Energy Northwest Board of Directors voted to terminate WNP-1. The construction of twin unit WNP-4, located 1250 m (4100 ft) east-northeast of CGS, was terminated in January 1982. These projects have a separate access road that ties into the Hanford Site Route 4, 1.6 miles south of the CGS access road. Support activities at either the WNP-1 or WNP-4 sites do not interfere with operation of CGS. These may include activities associated with site restoration and economic development (such as leasing of excess facilities for office space and manufacturing). Within the exclusion area, Energy Northwest has the authority to determine all activities within the meaning of 10 CFR 100.3(a), including the authority to remove all personnel and property from the area.

The Laser Interferometer Gravitational-Wave Observatory (LIGO) is located approximately 3.3 miles west-southwest from the plant site. The mission of this research facility is to observe gravitational waves of cosmic origin. The facility houses laser interferometers, consisting of mirrors suspended at each of the corners of an L-shaped vacuum system measuring 2.5 miles on a side. The materials and activities at this facility do not impact the operation of CGS.

As discussed in Section 2.1.1 and shown in Figure 2.1-1, CGS is located on the DOE Hanford Site. In reviewing the plant site and the vicinity for potential external hazards or hazardous material, the Hanford facilities currently operating, recently operating, or with the potential for operating were screened. The facilities discussed below are those believed to pose the most risk to the safe operations of CGS. The safety analysis reports and accident analysis prepared for those facilities were reviewed to determine possible hazards. No accidents evaluated present a physical challenge to the CGS buildings. Releases with the potential to impact the operation of CGS were radioactive particulate that would be effectively mitigated within General Design Criterion (GDC) 19 limits by the control room high-efficiency particulate air (HEPA) filters. Considered but not included were the 200 East Burial Grounds, the Critical Mass Laboratory, the Liquid Effluent Retention Facility, and the Effluent Treatment Facility in the 200 East Area. In the 200 West Area, the T Plant, U Plant, Reduction-Oxidation Plant, and the 222-S Laboratory were considered but not included. These facilities have insufficient radiological or toxicological inventories in a dispersible form to represent a risk to CGS operation. The specific facilities included are discussed in Table 2.2-1.

Three DOE facilities are located within a 5-mile radius of the plant site. These are the Fast Flux Test Facility (FFTF) and two radioactive waste burial grounds. The specific hazards associated with these facilities are summarized in Table 2.2-1 and the specific activities are listed below:

- The FFTF is a deactivated sodium cooled breeder reactor located approximately 3 miles southwest of CGS. All fuel has been removed and shipped to the Idaho National Laboratory. All sodium has been removed, solidified, and is stored on-site. The facility has been placed in a long-term, low-cost surveillance and maintenance condition.

- The 618-10 (300 North) Waste Burial Ground is approximately 3.5 miles south of CGS. DOE has initiated remediation activities at the site.

- The 618-11 (Wye) Waste Burial Ground is directly west of CGS, outside of Energy Northwest leased land, but within its 1950-meter exclusion area radius and security perimeter. The site received low- to high-activity waste, fission products, some plutonium-contaminated waste, and non-radiological hazardous waste from March 1962 to December 1967 from the Hanford 300 Area. The waste is buried in 3 trenches, 50 Vertical Pipe Units (VPUs), and four caissons. The site was covered with an overburden of soil when it was closed. The surface was stabilized in 1982 with an additional 2 ft of soil. Since surface stabilization, activities at the site have been limited to monitoring and surveillance. DOE completed non-intrusive surveillance and characterization activities at the site in 2011 to obtain data information and information for planning remediation activities.

The DOE 300, 200 East, and 200 West Areas are located within a 10-mile radius of the site. The current waste management activities (storage, disposal, and treatment) conducted in these areas are discussed in Table 2.2-1. The 300 Area is approximately 7 miles southeast of CGS. The only hazard presented to CGS from this site is from the spent nuclear fuel and other radioactive material stored there. There is an unknown quantity of miscellaneous reactor fuel material in the 300 Area. This quantity is not publicly available information.

The DOE 200 East and 200 West Areas are approximately 10 miles northwest of CGS. Originally these facilities were constructed to support the extraction of weapons grade plutonium for the defense program. However, as the Hanford mission has changed from production to environmental cleanup, so has the purpose of the facilities discussed. This change in mission has, in some cases, resulted in a change in the hazards presented to CGS plant site and personnel.

A private (non-DOE) low-level radioactive waste disposal area is adjacent to 200 East Area. There are also plans to build private waste vitrification facilities adjacent to 200 East. These facilities are also discussed in Table 2.2-1.

Several plutonium production reactor facilities are located approximately 20 miles north-northwest of CGS. All of the reactors were water cooled, graphite moderated. The last operating reactor, the N Reactor, was permanently shut down in 1991. The N Reactor also provided steam for the Energy Northwest Hanford Generating Station until 1987. The fuel has been removed from the reactors for storage or treatment. The current activities at these reactor sites are also discussed in Table 2.2-1.

The nearest petroleum product storage tanks are located 22 miles southeast of the site: approximately 23 million gal capacity at the Chevron Pipeline Company and approximately 20 million gal capacity at the Tidewater Barge Lines.

2.2.2.2 Description of Products and Materials

The existing Hanford Site railroad track (owned by the DOE and operated by a private contractor in support of the Hanford Operations), and the CGS, the WNP-1, WNP-4, and the FFTF railroad spurs all run within the exclusion area of the plant site. Shipments of large quantities of hazardous materials on this track that existed during initial licensing of CGS are no longer made (Reference 2.2-4).

The DOE has no plans for railroad shipments of explosives in the foreseeable future. However the DOE's Richland Operations Office has agreed to notify Energy Northwest prior to transporting any explosive shipments of more than 1800 lb past CGS (Reference 2.2-5). Energy Northwest will provide an analysis to the NRC of the potential consequences prior to the start of such shipping (Reference 2.2-6).

Hazardous material is also transported on Hanford Route 4 by DOE. Chlorine is the only material of concern transported on Route 4 with the potential for impacting CGS operation. Section 6.4.4.2.1 provides additional information on control room habitability assessments for CGS.

The Yakima Training Center, a sub-installation of Fort Lewis, is 30 miles northwest of the site. The center consists of 327,000 acres. The center provides training facilities and logistical support and it is used for firing of all types of ordnance, both in a direct mode and by indirect artillery and mortars. Weapons to 155mm are fired. This type firing occurs frequently. Other types of live ordnance use at the center include aerial delivery by high performance aircraft of ordnance to include 2,000-lb bombs, helicopter weapons which include automatic weapons and

2.75-in. folding fin rockets, and anti-aircraft missiles. These latter activities are significant as to occurrence. The majority of the ordnance impacts a 20,000-acre area which is generally located in the central portion of the center. All activities are confined to the geographical limits of the center and/or its restricted air space unless special arrangements are made with affected agencies. Mechanized units (i.e., tanks and armored personnel carriers) from Fort Lewis and reserve components conduct extensive maneuvers on all accessible areas of the Training Center and use specially designed ranges to practice firing their weapons. Infantry and engineer units that support the mechanized units also train at the center. Training activity is greatest from March to November. War games sometimes involve troop and equipment deployment at the Richland Airport and along Highway 243 west of Vernita Bridge. Helicopters may fly near the Hanford Site, or military vehicles may travel over Highway 240 (Reference 2.2-7).

2.2.2.3 Pipelines

There are no commercial oil or gas pipelines in the vicinity of CGS. The nearest major natural gas transmission pipeline to the site is about 12 miles. A 20-in. gas transmission line of the Northwest Pipeline Corporation is located east and essentially parallel to U.S. Highway 395 between Pasco and Ritzville, Washington. A second pipeline system consisting of parallel 36-in. and 42-in. lines, owned by Pacific Gas Transmission Company, passes through Wallula, approximately 24 miles from the site (Reference 2.2-8). These distances eliminate any potential hazard to plant operations due to a natural gas fire or explosion. The Energy Northwest Hydrogen Storage and Supply Facility is located 0.6 miles south-southeast of the plant and is connected to the plant with a 2-in NPS gas pipeline. The pipeline runs north from the facility approximately 400 ft east of the plant and then turns and runs west approximately 400 feet north of the plant then south approximately 200 ft west of the plant to its connection point on the west side of the Turbine Building. Fire and explosion risks to the plant involving this pipeline are discussed in Appendix F and Section 3.5.1.5.

2.2.2.4 Waterways

Makeup water inlet structures are located in the Columbia River 315 ft from the shoreline at low river flow (36,000 cfs; el. 341.73 ft) at river mile 351.75.

A significant amount of Columbia River barge traffic moves as far upstream as the Ports of Pasco and Kennewick. Also, a docking facility established by the Port of Benton in North Richland (approximately 9 miles downstream of the CGS site) is accessible by barges with a maximum 16 ft of draft (normally 2500 to 3000 tons). The first use of this facility was in April 1973 when the FFTF reactor vessel was off-loaded. Traffic to the North Richland dock is very infrequent in comparison to that in Pasco and Kennewick due to the lack of large industrial concerns in the region between Richland and Priest Rapids Dam. This facility is most often used to off-load dismantled nuclear components. On several occasions in the past,

lightly loaded barges have transported material to the vicinity of the Hanford Site. This required maintenance of an adequate flow from Priest Rapids Dam during the transit period.

2.2.2.5 Airports

Two commercial airports are within 20 miles of CGS. The closest is Richland Airport 11 miles south of the plant. This general aviation airport has two 4000-ft runways, one with a 010°/190° orientation and the other with a 070°/250° orientation. Visual flight rule landings are standard for Federal Aviation Administration (FAA) non-control-tower airports.

The Tri-Cities Airport 17 miles southeast near Pasco is the largest airport within 40 miles. The FAA operates the air traffic tower and airport radar approval control facility. The airport has two 7700-ft crossing runways with 120°/300° and 030°/210° orientations. The latter has a 4430-ft parallel runway. Runway 30 has a very high frequency omnirange (VOR) instrument approach and Runway 21R has an instrument landing system and is an instrument approach runway.

Information relative to the flight paths and activity at these two commercial airports, the Yakima Training Center, and the nearby private airstrips is discussed in Section 3.5.1.6.

2.2.2.6 Projection of Industrial Growth

There is no projected growth of waterway traffic nor plans for oil and gas pipelines within 10 miles of CGS.

2.2.3 EVALUATION OF POTENTIAL ACCIDENTS

2.2.3.1 Determination of Design Basis Events

Energy Northwest has investigated the resistance of plant structures to explosions. The reactor building is a reinforced-concrete structure up to the refueling floor and is designed to withstand the worst probable combination of wind velocity and associated pressure drop due to a design basis tornado. A differential pressure of 3 psi between the exterior and interior of the building is also considered in the design. At its nearest point, the railroad is 510 ft from the reactor building.

From the above criteria, it has been determined that the reactor building can resist an explosion of 20,000 lb of dynamite on a railway car 510 ft from the reactor building. The performance of the reactor building structure for this blast loading condition will be similar to that for the

original design basis tornado loading condition based on the 3 psi differential pressure used in the original tornado analysis.

In the unlikely event of an explosion or fire on the railroad affecting the 115-kV shutdown power supply, the 230-kV power supply or the diesel generators would fulfill that function.

It is extremely unlikely that an explosion or fire on the mainline railroad would compromise the safe shutdown of the facility. As noted in Section 2.2.2.2, DOE has no plans to ship explosives on the railroad, and the agency will notify Energy Northwest prior to the shipment of explosives in a quantity greater than 1800 lb. Energy Northwest Security controls access to the rails that pass near the plant. The only explosives on the Hanford Site are small arms munitions. As described in Section 2.2.2.2, this represents no hazard to the operation of CGS. The Yakima Training Center does not endanger the site. Hydrogen gas stored in the gas bottle storage building and in a trailer parked adjacent to the gas bottle storage building will not pose any fire or explosion problem because of the light weight properties and dispersal qualities of the gas and the distances (approximately 400 ft) between the storage areas and any safety-related equipment. Hydrogen gas stored at the Hydrogen Storage and Supply Facility (HSSF) and transported to the plant by pipeline does not pose a significant fire or explosion risk to the plant as discussed in Appendix F and Section 3.5.1.5. Habitability considerations for the control room and quantities of hydrogen gas stored in/adjacent to the gas bottle storage building and at the HSSF are discussed in Section 6.4.4.2.3.

Table 2.2-1 summarizes the potential events at the Hanford Site facilities that could present a radiological or chemical hazard or hazardous situation to the continued safe operation of CGS. The cesium and strontium capsules stored at the Waste Encapsulation and Storage Facility (WESF), the fuel stored at the K Basins, and the high level waste stored in the tank farms present contributions to risk at CGS due to presence of ^{137}Cs, ^{90}Sr, and ^{241}Am. However, based on consideration of the radionuclide inventory at risk, the ability to transport this inventory, and the proximity of the storage facility, the risk is dominated by the inventory stored at WESF. The probability of the loss of cooling in the capsule storage pool is extremely low, but the potential dose to unprotected CGS personnel due to the release is significant. Any required evacuations would be performed as discussed in the Emergency Plan. The design basis accident at WESF would not result in a condition at CGS which would challenge the criteria established in 10 CFR 100.

In each event evaluated, the radiological dose resulting from particulate releases would be adequately filtered by the control room HEPA filters, mitigating any challenge to the habitability of the control room. None of the facilities present a chemical exposure risk to CGS. Radiological exposures for postulated events on the Hanford Site are characterized by the contribution from gaseous radionuclides because of the short half-life of ^{131}I and because the other noble gases were released during the spent fuel processing.

The Yakima Training Center, discussed in Section 2.2.2.2, is used for military maneuvers and weapons training and is the only significant military activity in the vicinity of the Hanford Site. The only weapon currently in use at the Yakima Training Center known to present a hazard to the Hanford Site is the multiple launch rocket system (MLRS). With a range in excess of 25 miles, the MLRS could potentially impact the CGS site. However, the MLRS is only fired from the perimeter of the Yakima Training Center into a centrally located impact zone and is only fired with dummy warheads. Given this information, additional safety features, and the administrative controls in place at the Yakima Training Center, a weapons accident having an impact on CGS is very improbable.

As stated in Section 2.2.2.1, confinement of all radioactive materials at the ISFSI is provided by the required use of NRC certified spent fuel storage casks listed in 10 CFR 72.214. Pursuant to the 10 CFR 72.212 report, evaluations performed in support of the ISFSI have demonstrated the reactor site-specific parameters are bounded by the safety analysis for the generically approved cask. Accordingly, activities associated with the facility do not adversely impact operation of CGS (Reference 2.2-10).

Brush fires have occurred on the Hanford Site and have presented no potential hazard to existing facilities. Areas adjacent to CGS major buildings and auxiliary facilities are maintained to prevent weed growth by landscaping, gravel, ground cover, and weed control spraying. The Hydrogen Storage and Supply Facility (HSSF) is landscaped with gravel beyond the perimeter of the site, exceeding the code required clearance distance, to keep the area free from dry vegetation and combustible materials. These or similar methods of weed control minimize brush fire hazards to CGS facilities.

The potential effects of fires that involve materials used in the operation of the plant are discussed in Appendix F.

The formation of unconfined vapor clouds caused by the accidental release of flammable or toxic liquids or vapors stored at the plant site is discussed in Section 6.4 and addressed by the Emergency Plan.

The non-safety-related makeup water intake consists of two sets of paired perforated pipe sections. One set is capable of supplying the full makeup water requirements of the plant. Extreme low river flow (36,000 cfs) will provide about 0.5 ft of water over the top of the intake pipes. The probability of damage to both sets of intakes as a result of a pleasure boat or barge accident is extremely remote given the infrequency of both extreme low flows and large boat and barge traffic. In the unlikely event that such an accident might occur, destruction of the makeup water intake structure would be comparable in effect to loss of offsite power to the makeup water pumps. The Seismic Category I spray ponds provide for 30-day cooling without makeup. This is ample time to restore makeup from either the river or wells.

There are no upstream industrial facilities for which waterborne deliveries of significant quantities of petroleum products, corrosive chemicals, or other hazardous materials are expected. Fuel oil, diesel oil, acids, and caustics are stored at the N-Reactor site. The oil storage facilities are protected by dikes, and the chemical storage facilities are far enough from the river to avoid direct discharge. Thus, there is no possible hazard to the plant due to spillage of such materials into the river. There are no upstream releases which may be corrosive, cryogenic, or coagulant.

2.2.3.2 Effects of Design Basis Events

As discussed in Section 2.2.3.1, the activities of nearby industrial, transportation, and military facilities will have no adverse effect on the plant.

2.2.4 REFERENCES

2.2-1 Holmes, D. B., Energy Northwest, personal communication with Steve Burnam, Site Infrastructure Division, Department of Energy, July 31, 1998.

2.2-2 Presidential Proclamation 7319, Establishment of the Hanford Reach National Monument, 65 FR 37253, June 9, 2000.

2.2-3 Chasse, J. P., Energy Northwest, personal communication with B. J. Rokkan, Safeguards and Security Division, DOE, Richland Operations Office, December 6, 1977.

2.2-4 Note, D. A. Marsh, Westinghouse Hanford, to D. E. Larson, Supply System, dated January 22, 1993.

2.2-5 Memorandum, C. A. Hansen, Assistant Manager for Waste Management, DOE-RL to Alice Q. Murphy et al., 98-WPD-032, February 20, 1998.

2.2-6 NUREG 0892, Safety Evaluation Report Related to the Operation of WPPSS Nuclear Project No. 2, Section 2.2.1, March 1982.

2.2-7 Arbuckle, J. D., Energy Northwest, personal communication with J. Reddick, Executive Officer, Yakima Training Center, July 29, 2003.

2.2-8 Hosler, A. G., Contact with Local Organizations to Support CSB SAR Chapter 1 (Memo 042AGH.96 to Canister Storage Building Report File), Science Applications International Corporation, May 6, 1998.

2.2-9 Deleted.

2.2-10 Energy Northwest, Independent Spent Fuel Storage Installation 10 CFR 72.212 Evaluation, Docket Number 72-35, Revision 1, September 2002.

Table 2.2-1

Hanford Site Nuclear Facilities

Facility	Description	Hazard	Design Basis Event	Impact on CGS
Fast Flux Test Facility (FFTF) Ref: Surveillance and Maintenance Plan for FFTF, Rev. 0, DOE/RL-2009-26	Deactivated sodium cooled breeder reactor	Activated solid sodium	1) 180,000 lb sodium spill - 2-hr dose at 1.5 mi = 0.015 mrem, 24-hr dose at 4.5 mi = 0.26 mrem	Particulate release, effectively mitigated by distance
DOE 618-10 (300 North) Waste Burial Ground Ref: Final Hazard Categorization for the 618-10 Burial Ground Remediation, Rev.2, February 2011, WCH-390	Disposal site with broad spectrum of low- to high-level solid radioactive wastes buried in caissons or pipe	Radioactive waste	Caisson penetration with fire — unmitigated dose at 5 km = 10.2 mrem	Particulate release, effectively mitigated by distance (>5 km)
DOE 618-11 (Wye) Waste Burial Ground Ref: 618-10 and 618-11 Waste Burial Grounds Basis for Interim Operation, Rev. 1, WCH-183	Disposal site with broad spectrum of low- to high-level solid radioactive wastes and non-radiological hazardous materials buried in caissons or pipe	Radioactive waste inventories, primarily Cs-137, Sr-90, and Pu-239 and non-radiological hazardous materials bounded by beryllium	Caisson penetration with fire and explosion: control room doses are less than 0.1 rem; beryllium oxide concentration of 4.6×10^{-3} mg/m^3 at 100 m from 618-11 site boundary	Particulate release, effectively mitigated by credited 618-11 Waste Burial Ground project controls. The soil overburden covering the VPUs and caissons in the 618-11 Waste Burial Ground is credited for reducing releases and is designated as a passive design feature. No missiles are postulated for this event.

Table 2.2-1

Hanford Site Nuclear Facilities (Continued)

Facility	Description	Hazard	Design Basis Event	Impact on CGS
B Plant Ref: B Plant Basis for Interim Operation, March 6, 1997, HNF-SD-BIO-003	Process to remove cesium and strontium from radioactive waste, deactivated, currently in surveillance and maintenance mode	Residual radionuclide inventories on cell filters (^{137}Cs, ^{90}Sr, and ^{241}Am)	Flooding cell 291-B HEPA filters - 0.368 rem max. public dose	Particulate release effectively mitigated by distance
Plutonium-Uranium Extraction Facility (PUREX). PUREX End State Basis for Interim Operation (BIO) 1997, HNF-SD-CP-15B-004 (Draft)	Currently shut down, in preparation for decommissioning and decontamination	Residual plutonium and uranium contamination	Design basis earthquake, dose @ 100 m - 1.9 rem; 12 km - 7.4×10^{-4} rem	Particulate release, mitigated by distance
Plutonium Finishing Plant (PFP) Ref: Plutonium Finishing Plant Final Safety Analysis Report, 1995, WHC-SD-CP-SAR-021	Receipt and storage of SNM, reactive material stabilization, radioactive and mixed waste handling	Stored SNM, and residual plutonium contamination	Design basis earthquake, 8-hr dose of 15.2 rem @550 m 24-hr dose of 0.31 rem @12,500 m	Particulate release, mitigated by distance
Tank Waste Remediation System (TWRS) Facilities Ref: Tank Waste Remediation System Basis for Interim Operation, 1997, HNF-SD-WM-BIO-00, Revision 0	Mixed radioactive and chemical wastes storage in 149 single shell tanks (SST) and 28 double shell tanks (DST) in 12 tank farms Associated support facility: 242-A-Evaporator	SSTs contain combinations of sludge, saltcake, and interstitial and pooled liquids DSTs contain liquid and slurry waste with small amounts of sludge		

Table 2.2-1

Hanford Site Nuclear Facilities (Continued)

Facility	Description	Hazard	Design Basis Event	Impact on CGS
Tank Waste Remediation System- Project (TWRS-P) (private facilities, proposed for construction in 2000) Ref: DOE/RL-96-0006	Vitrify low level, high level, and transuranic mixed waste	High level radioactive waste	Requirements for authorization limit to less than 25 rem/event in an accident. Releases are projected to be airborne particulate.	HEPA filter system would protect CGS control room operators, in accordance with the limits of GDC 19
Waste Encapsulation and Storage Facility (WESF) Ref: Waste Encapsulation and Storage Facility Basis for Interim Operation, 1997, HNF-SD-WM-BIO-002	Conversion process for cesium and strontium has halted	Cesium chloride and strontium fluoride salts, encapsulated in double-walled metal containers stored in water-filled cooling basin	Capsule rupture following loss of water from storage pool - 24 hr exposure to public, 9 rem	Control room exposure mitigated by HEPA filters; potential evacuation of other personnel
Low-Level Waste Disposal Site (Private)	Buried storage of low-level radioactive waste in lined containers	Low-level buried waste, monitored as required by NRC license	No credible event	None
Canister Storage Building (CSB) Ref: Letter; DOE to H. J. Hatch, Flour Daniel Hanford, 28 May 97	Storage of spent nuclear fuel (SNF) from the K Basins in sealed multi-canister overpacks (MCO)	2100 metric tons of spent fuel, from production reactors	Requirements for authorization limit to less than 5 rem/event in an accident. Releases are projected to be airborne particulate	HEPA filter system would protect CGS control room operators, in accordance with the limits of GDC 19
Cold Vacuum Drying Facility (CVDS) Ref: Letter; DOE to H. J. Hatch, Flour Daniel Hanford, 28 May 97	Draining and vacuum drying to remove water from MCOs in preparation for interim storage at CSB	Spray release	Requirements for authorization limit to less than 5 rem/event in an accident. Releases are projected to be airborne particulate.	HEPA filter system would protect CGS control room operators, in accordance with the limits of GDC 19

Table 2.2-1

Hanford Site Nuclear Facilities (Continued)

Facility	Description	Hazard	Design Basis Event	Impact on CGS
B, C, D, DR, F, and H Reactors (shutdown since 1969) Ref: WHC-EP-0619, Vol. 1.	Single-pass, water-cooled, graphite-moderated reactors	The onsite hazards involve personnel injury, primarily falls and electric shock. No significant offsite risks	No credible event	None
K East and West reactors (shutdown since 1971) Ref: WHC-EP-0619, Vol. 1.	Single-pass, water-cooled, graphite-moderated reactors	The onsite hazards involve personnel injury, primarily falls and electric shock. No significant offsite risks	No credible event	None
K East and West Basins Ref: WHC-EP-0619, Vol. 1.	Storage basins for spent fuel, some severely degraded	Approximately 2100 metric ton inventory of irradiated reactor fuel	Dropping and overturning of a transfer cask containing reactor fuel. (Bounding event; but transfer is administratively prohibited)	None
N reactor (shutdown since 1987) and N Basin Ref: WHC-EP-0619, Vol. 1. and BHI-00866, Rev 0	A pressure tube, water-cooled, graphite-moderated reactor with fuel assemblies removed for decontamination and decommissioning	The onsite hazards involve personnel injury, primarily falls and electric shock. No significant offsite risks	No credible event	None

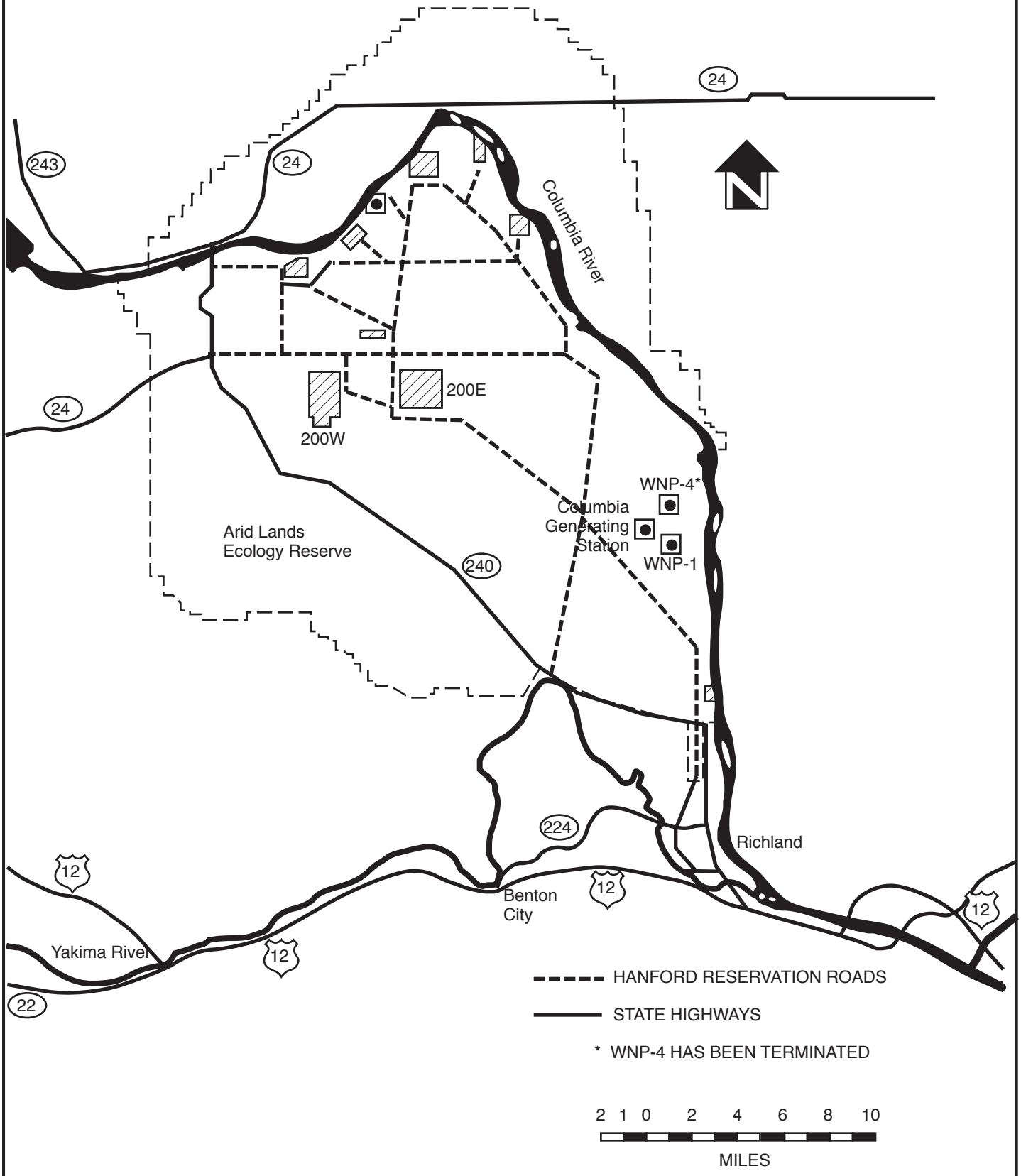

Columbia Generating Station
Final Safety Analysis Report

Hanford Reservation Road System

Draw. No. 990306.15	Rev.	Figure 2.2-1

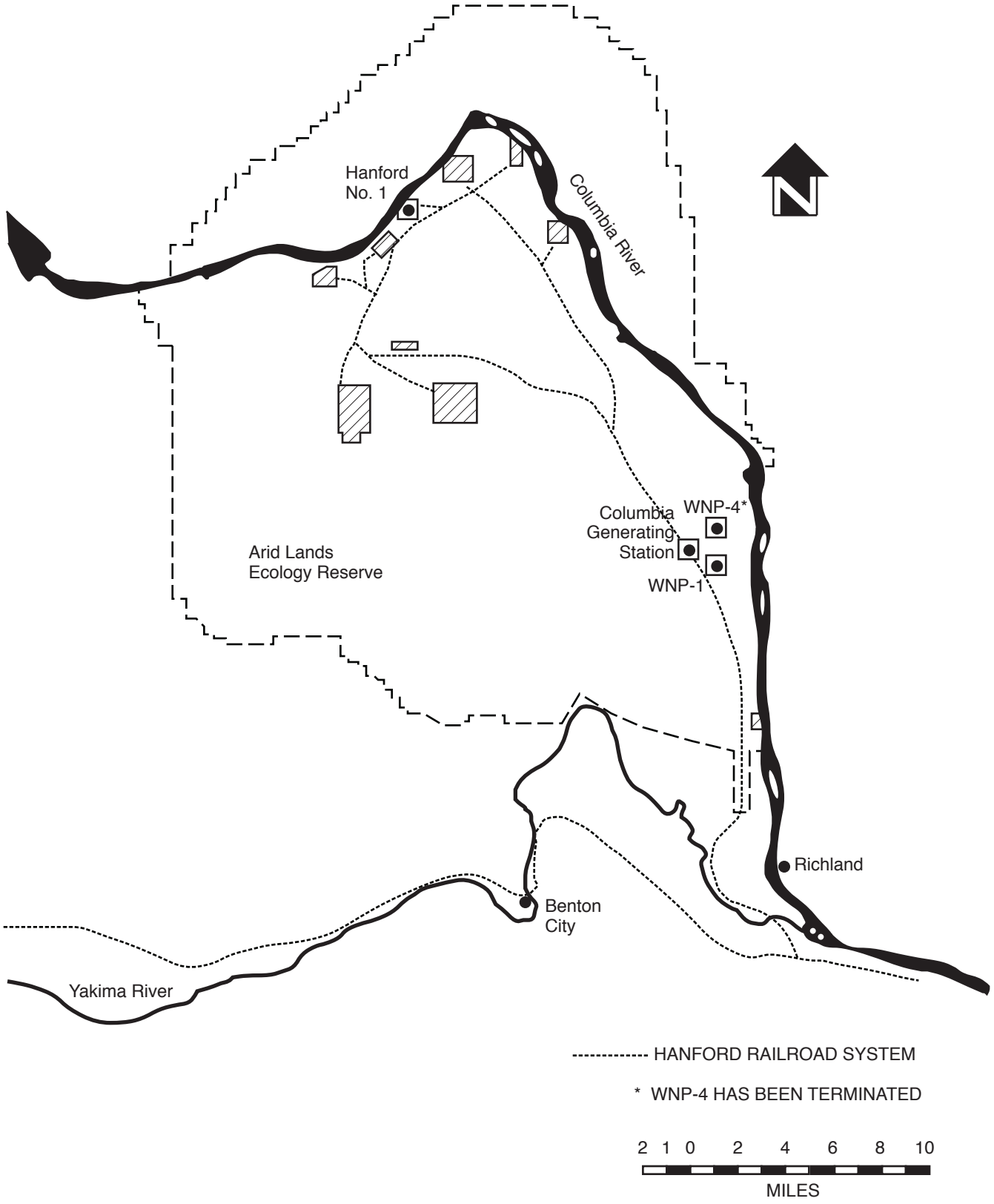

Columbia Generating Station
Final Safety Analysis Report

Hanford Reservation Railroad System

Draw. No. 990306.16	Rev.	Figure 2.2-2

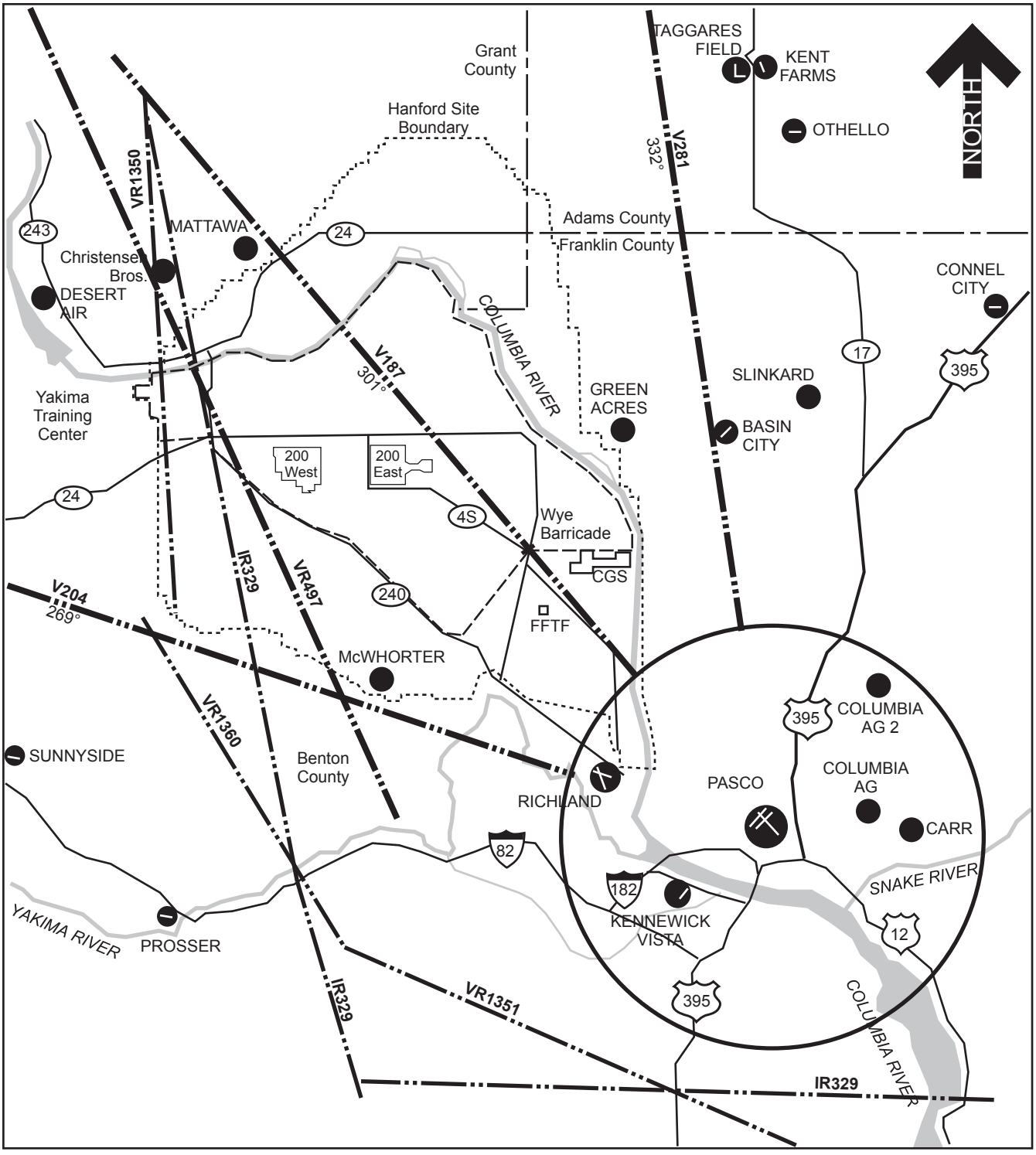

Columbia Generating Station Final Safety Analysis Report	**Federal Airways and Instrument Approaches/Departures**		
	Draw. No. **900547.96**	Rev.	Figure **2.2-3**

2.3 METEOROLOGY

The italicized information, including associated tables and figures, is historical and was provided to support the application for an operating license.

2.3.1 REGIONAL CLIMATOLOGY[*]

2.3.1.1 General Climate

The site is located in a mid-latitude semi-arid (steppe) climatic region in the Lower Columbia Basin which is the lowest elevation of any part of central Washington. A major factor influencing this climatological region is its location in the continent, well away from the windward coast and protected to the west by the 4,000 to 7,000-ft average elevation Cascade Mountains. Dominant air masses affecting the region are of maritime polar origin as modified by the presence of these mountains. Modified continental tropical and polar air masses also periodically affect the climate. In winter, there is a succession of cyclones as the westerlies and the polar front prevail in these latitudes. The mountain barriers commonly induce these storms to occlude by delaying air mass movement. Fewer frontal passages occur during the summer months since subtropical oceanic high cells reach their highest latitudes thereby diverting cyclonic storms poleward. Along the eastern margin of the Pacific anticyclone, an out-flow of stable subsiding air brings distinctly drier conditions to the North American Pacific coast.

The regional temperatures, precipitation, and winds are greatly affected by the presence of the mountain barriers. The Rocky Mountains and ranges in Southern British Columbia are effective in protecting the inland basin from the more severe winter storms and associated cold polar air masses moving southward across Canada. Occasionally, an outbreak of cold air will pass through the Basin and result in low temperatures or a damaging spring or fall frost. Maritime polar air traveling eastward from the coastal zone cools as it rises along the western slope of the Cascade Range. These orographic effects cause heavy precipitation on the windward and light precipitation on the leeward slopes. The prevailing westerly. winds are normally strongest during winter and spring due to the presence of cyclonic scale disturbances and associated frontal activity. During those months, foehn or chinook winds (a warm dry

---

[*] *This section is based on records kept at the Hanford Meteorology Station (14 miles northwest of the site, elevation 733 ft MSL) from 1945 to 1980 (2) and 100-N area sites (1) (supplemented with precipitation and temperature data taken by U.S. Weather Bureau cooperative observers at a site about 25 miles north of the present station location during the period from 1912 to 1944 (2,3) and regional climatological data gathered during the period from 1931 to 1960). (4) Other references are as indicated.*

wind on the lee side of a mountain range; the warmth and dryness of the air is due to adiabatic compression upon descending the mountain slopes) occur whenever cyclonic circulation is sufficiently strong and deep to force air completely across the cascades in a short period of time. At other times during the winter, warm front occlusions can force moist air over the Cascade Range. The mixing of this moist air with relatively cooler air in the Basin results in considerable cloudiness and fog. The percent of possible sunshine ranges from 20 to 30 percent in winter, 50 to 60 percent in spring and fall, and 80 to 85 percent in mid-summer.

Because the site is in the rain shadow of these mountains, annual average precipitation decreases from about 100 inches near the summit of the Cascades to about 6 or 7 inches in the Basin. Approximately 70 percent of the annual total precipitation occurs from November through April and about 10 percent occurs during July through September. Rainfall amounts are normally light in the summer and gradually increase in late fall, reaching a peak of about one inch each month in midwinter due to cyclonic storm and frontal activity. Rainfall amounts decrease in Spring, increase somewhat in June, and again sharply decrease in July. During mid-summer, it is not uncommon to have 3- to 6-week periods with trace rainfall. There are only two occurrences per year of 24-hour amounts of 0.50 inch or more, while occurrences of 24-hour amounts of 1.00 inch or more number only four in the entire 25 years of record (1946 to 1970). One of these was the record storm of October 1 through 2, 1957, in which rainfall totaled 1.08 inches in three hours, 1.68 inches in six hours, and 1.88 inches in twelve hours. At the other extreme, there have been 81 consecutive days without measurable rain (June 22 through September 10, 1967), 139 days with only 0.18 inch (June 22 through November 7, 1967), and 172 days with only 0.32 inch (February 24 through August 13, 1968).

About 45 percent of all precipitation during the months of December, January, and February is in the form of snow. Regional annual total snowfall amounts have ranged from less than 1/2 inch in 1957 to 1958 to 56.1 inches for the winter of 1992-1993; the annual average total is about 14 inches.

Snow rarely remains on the ground longer than two to four weeks or reaches a depth at any time in excess of four to six inches, as rapid melting, which often contributes to local stream flooding, can occur from rain or Chinook winds. The record greatest depth of 24.5 inches occurred in February 1916.

Thunderstorms have been observed in the area in every month except November. Although severe ones are rare, lightning strikes have occasionally ignited grass fires which burned thousands of acres of the Hanford Reservation and resulted subsequently in considerable wind erosion of soil. The most notable of these occurrences were in August 1961, July 1963, and July 1970, and August 1984.

The continental-type climate not only affects precipitation in the Basin but also results in wide ranges and variations in annual temperature conditions. While the regional annual average temperature is about 53°F, the coldest month, January, has a mean of about 29°F; the

warmest month, July, has a mean of about 76°F. Although the presence of the cascades contributes to the wide differences in monthly average temperatures, other mountain ranges shield the area from many of the arctic surges, and half of all winters are free of temperatures as low as 0°F. However, six winters in 58 of record have contributed a total of 16 days with temperatures of -20°F or below; and in January to February 1950, there were four consecutive such days. There are ten days of record when even the maximum temperature failed to rise above zero. At the other extreme, in the winter of 1925 to 1926, the lowest temperature all season was +22°F.

Although winter minima have varied from -27°F to +22°F, summer maxima have varied only from 100°F to 115°F. However, there is considerable variation in the frequency of such maxima. In 1954, for example, there was only one day with a maximum as high as 100°F. On the other hand, there have been two summers (1938 and 1967) when the temperature went to 100°F or above for 11 consecutive days.

Although temperatures reach 90°F or above on about 56 days a year, there are only about seven annual occurrences of overnight minima 70°F or above. The usual cool nights are a result of gravity winds.

The channeling of air by the Cascade Mountains and surrounding terrain produces a prevailing WNW and NW regional flow. Local topographic features can cause other channeling effects and formation of local diurnal wind circulation systems which produce a greater degree of variability in winds at locations within the Basin. For example, the Columbia Generating Station (CGS) site experiences a bimodal wind direction distribution from approximately south and also northwest; at the Hanford Meteorological Station (HMS) about 14 miles northwest, the direction distribution displays a single peak at approximately WNW to NW (refer to 2.3.2).

Drainage (gravity) winds channeled by topographic features produce a marked effect on diurnal range of wind speed and cause the highest monthly average speeds of about 9 mph to occur during the summer months. In July, for example, hourly average speeds range from a low of 5.2 mph from 9 to 10 a.m. to a high of 13.0 mph from 9 to 10 p.m. In contrast, the corresponding speeds in January are 5.5 and 6.3 mph. These warm season diurnal winds, resulting from relatively cold air draining from the Cascade Mountains, occur in response to pressure gradients created between surface-heated warm, dry basin air and cooler air situated over the mountains and coastal region. This favors an outbreak of stronger winds during the afternoon and evening hours. Although the gravity wind occurs with regularity in summer, it is never strong unless reinforced by frontal activity. In June, the month of highest average speed, there are fewer instances of hourly averages exceeding 31 mph than in December, the month of lowest average speed. A complete summary of the monthly averages and extremes of climatic elements at the Hanford Reservation appears in Table 2.3-1.

2.3.1.2 Regional Meteorological Conditions for Design and Operating Bases

2.3.1.2.1 Severe Weather Phenomena

2.3.1.2.1.1 Heavy Rain, Snow, and Ice. Glaze is a coating of ice, generally clear and smooth, but with some air pockets. It is formed on exposed objects by the freezing of super-cooled drizzle or rain drops. Glaze is denser, harder, and more transparent than either rime or hoar frost. Although the record shows an average of seven glaze days per year, many of these cause little or no inconvenience to the public. Two outstanding exceptions occurred on February 11 to 12, 1954, and on November 23 to 24, 1970. There was serious disruption to Hanford traffic in each instance although there was no known damage to transmission lines. In each instance, rising temperatures soon melted the ice.

Precipitation frequency (rain and snow), intensity, and quantity statistics are presented in Figures 2.3-1 and 2.3-2 and Tables 2.3-2 and 2.3-3. For the winter of 1992-93, the following snowfall records were set: greatest winter snowfall (56.1 inches); most days with greater than 1, 6, and 12 inches on the ground (71, 41, and 9, respectively); and greatest 24-hour snowfall (10.2 inches) on February 18 and 19. Probable maximum precipitation is given in 2.4.3.1.

2.3.1.2.1.2 Thunderstorms and Hail. Thunderstorms may occur during any month of the year at Hanford. A thunderstorm day is one in which thunder is heard. If a thunderstorm should begin in late evening and last past midnight, it is counted as two thunderstorm days even though only one storm event occurred. Similarly, should there be two or more distinct thunderstorms in a day - and this sometimes happens - it is counted as a single thunderstorm day. The table below shows the monthly frequency of thunderstorms.

HMS THUNDERSTORM DAYS: 1945-1970

	J	F	M	A	M	J	J	A	S	O	N	D	SUM
Total	0	1	7	18	53	64	46	54	24	5	0	0	272
Average	0	#	#	1	2	3	2	2	1	#	0	0	11
% of Total	0	#	3	7	19	23	17	20	9	2	0	0	100

 # = Less than 0.5

Although the table above shows 0 for the months of November through January, a thunderstorm occurred at HMS on December 22, 1971. In Richland, one occurred on January 18, 1953. However, the thunderstorm season essentially includes only the months of April through September. Although the average is eleven days per year, the number has varied from three to twenty-three. In June 1948, there were eight thunderstorm days during the month; and this record was repeated in August 1953. The records show that cold fronts probably constitute the greatest single cause of thunderstorms at HMS. During the years of 1947 to 1955, 43 percent of all thunderstorm days during the months of May through August

were directly associated with cold frontal passages. On several occasions (notably on August 7, 1953), lightning has struck the HMS tower.

Peak gust data are not available for the 50-, 200-, and 400- ft levels prior to 1952. Of the 185 thunderstorm days occurring during the period of 1952 to 1970, the speed classification of peak gusts on these days is as follows:

	Number of Cases			% of Total		
mph	50 ft	200 ft	400 ft	50 ft	200 ft	400 ft
< 21	18	9	5	10	5	3
21 -30	75	45	42	40	24	23
31 -40	63	80	73	34	43	39
41 -50	23	34	46	12	19	25
51 -60	4	11	12	2	6	8
61 -70	1	4	5	1	2	3
> 70	1	2	2	1	1	1
	185	185	185	100	100	100

Precipitation was not measured during 1945 and 1946 in which 26 thunderstorm days occurred. During the period of 1947 to 1970, 246 thunderstorm days were recorded. The daily precipitation distribution during these days was as follows:

Amount - Inches	Number of Cases	% of Total
None or trace	110	45
0.01 - 0.10	87	35
0.11 - 0.25	29	12
0.26 - 0.50	15	6
> 0.50	5	2
	246	100

Precipitation intensities are defined in Reference 2.3-5.

The record for rainfall intensity during a thunderstorm is 0.55 inch in 20 minutes (1.65 inches per hour) on June 12, 1969. This storm included hailstones of 1/4-inch diameter.

Hail was reported on fourteen, or 5 percent, of the total thunderstorm days. Blowing dust or dust was reported on sixteen thunderstorm days and both hail and blowing dust or dust on six days.

Hail is a rare phenomenon at Hanford. For all years of record, hail has not occurred more than twice in any year. Of the 272 thunderstorm days from 1945 to 1970, hail was reported on fourteen or 5 percent of these days. Hail was also reported on two days without occurrence

of either a cold frontal passage or a thunderstorm on the same day. The distribution by months of days on which hail occurred is as follows:

	J	F	M	A	M	J	J	A	S	O	N	D	Total
Number	0	1	1	4	2	1	2	2	1	0	0	0	14
% of Total	0	7	7	30	14	7	14	14	7	0	0	0	100

Where size was reported, all except two reports indicated sizes in the 0.2- to 0.3-inch range. The exceptions were May 26, 1954, and July 1, 1955, when the size reported was 0.4 inch.

There is no known case of local damage from hail.

2.3.1.2.1.3 Tornadoes

The State of Washington experiences, on the average, less than one tornado each year. Within a one hundred mile radius of the site, only fourteen tornadoes have been reported since 1916. These tornadoes are listed in Table 2.3-4. Of these fourteen recorded tornadoes, only five had any damage associated with them. A more extensive survey of tornadoes in the three northwestern states (Washington, Oregon, and Idaho) was performed by Fujita (6). His results indicate that tornadoes and hailstorms in this area occur primarily in "alleys". The locations of these "alleys" are shown in Figure 2.3-3 along with locations of tornadoes which have been recorded in the tri-state area during the twenty-year period from 1950 to 1969.

Jaech (7) has analyzed the data of Fujita (6) to determine the probability of a tornado striking the Jersey Nuclear Company Fuel Facility (now Siemens Power Corporation), which is located about eight miles from the site. His analysis estimates the probability of occurrence of a tornado in the vicinity of the Exxon site as six chances in a million during any given year or about one chance in four thousand during a forty-year plant life.

The peak tornado wind velocity estimated for the site is 214 mph (Reference 2.3-7). This includes an estimated maximum rotational and translational wind velocities (at a 95-percent confidence level). Daubek (Reference 2.3-8) estimates the maximum translational velocity to be 30 mph. The maximum pressure drop in the center of the tornado relative to the environment is estimated to be up to 1.5 psi (Reference 2.3-6).

These values are equal to or less than those tornado parameters listed for a Class III region (which includes the site location) in Regulatory Guide 1.76, issued April 1974. Prior to the issuance of this guide, CGS was designed to withstand some of the most stringent NRC tornado criteria presented for a site located within a Class I region.

A comparison between criteria used for CGS and those applicable to Class I and III regions are given below:

Design Basis Tornado Characteristics

	Maximum Wind Speed (mph)	*Rotational Speed (mph)*	*Translational Speed (mph)*	
			Maximum	*Minimum*
Class I Region	*360*	*290*	*70*	*5*
Class III Region	*240*	*190*	*50*	*5*
CGS	*360*	*300*	*60*	-

	Radius of Maximum Rotational Speed (ft)	*Pressure Drop (psi)*	*Rate of Pressure Drop (psi/sec)*
Class I Region	*150*	*3.0*	*2.0*
Class III Region	*150*	*1.5*	*0.6*
CGS	*264 - 880*	*3.0*	*1.0*

Wind and tornado loading criteria used in the CGS structural design are discussed in Section 3.3.

2.3.1.2.1.4 Strong Winds. *The Hanford region experiences high wind speeds due to squall lines, frontal passages, strong pressure gradients and thunderstorms.* The Hanford Reservation has experienced only one recorded tornado (June 1948) and has not been known to be affected by typhoons. No complete statistics are readily available which present frequency of occurrence of high winds produced or accompanied by a particular meteorological event. However, the highest winds produced by any cause are tabulated for HMS in Tables 2.3-5 and 2.3-6. Figure 2.3-4 indicates the return probability of any peak wind gust, again due to any cause.*

The speed-direction summary (Table 2.3-6) shows that daily peak gusts of at least 40 mph have occurred from all but four of the sixteen compass points indicated. The SW octant, however, accounts for 65 percent of such cases. The SSW octant accounts for 83 percent of daily peak gusts of 50 mph or over and 100 percent of those 60 mph or over. Since WNW and NW are the most frequently observed directions at HMS, they account for almost half of all daily peak gusts. However, less than 3 percent of these are at speeds of 40 mph or more. By contrast, 23 percent of daily peak gusts from the SSW and SW attain this speed. Although the winter season has a lower average wind speed than any other, it also has the greatest frequency of days with peak gusts 40 mph or over (10 percent). This compares with 8 percent for spring, 7 percent for fall, and 5 percent for summer. However, reflecting the frequent periods of stagnation in winter, this season also has the highest frequency of days with peak gusts under

**Peak wind gust data associated with thunderstorm activity are given in 2.3.1.2.1.2.*

10 mph (16 percent). This compares with 10 percent for fall and 1 percent for spring. In summer, such days are virtually non-existent with only one being tabulated in 1,102 days of record. About 60 percent of the days from May through August experience drainage winds of at least 13 mph from the west direction for at least two hours daily during the period of 1600 to 2400 PST.

The annual extreme fastest mile of wind speed* for a given region has been commonly used as the best available measure of wind for design purposes (Reference 2.3-9). The standard reference speed level is normally chosen at the 30-ft elevation, and wind speed is assumed to vary with the one-seventh power of height.

All CGS structures have been designed to withstand a basic wind (fastest mile) velocity, including gusts of 100 mph at an elevation of 30 ft above the site grade. *This design speed value is conservative for the CGS site since the 100 year return period peak gust as shown in Figure 2.3-4 at HMS is 86 mph at an elevation of 50 ft (as given in Tables 2.3-5 and 2.3-6 at that level peak gusts have not exceeded 80 mph during the period 1945 to present). The 100 year return period fastest mile of wind would be less than 86 mph since by definition gust velocity divided by an appropriate gust factor provides the velocity of the fastest mile of wind.* Although not recorded in historical records the 100 year fastest mile of wind can be expected to be in the range of 66 to 78 mph. These values are based on the application of gust factors of 1.3 and 1.1 (Reference 2.3-10) for gusts of one and 10 sec durations** respectively to the estimated historical value of 86 mph.

2.3.1.2.1.5 <u>High Air Pollution Potential (APP) and Dust Storm Potential</u>. Larson (11) has concluded that "consideration of the general weather parameters indicates a significantly high average annual APP over southeastern Washington." Holzworth (12) has estimated that the mean maximum January mixing depth in the Hanford area is about 250 meters, which is nearly the lowest in the contiguous United States, and for July about 2,000 meters. Hosler (13) has indicated a significantly high frequency of low-level inversion in winter over this area - on the order of 43 percent with bases below 150 meters. The occurrence of very stable and moderately stable conditions between the surface and 60 meters in winter at the Hanford Meteorology Tower is 66.5 percent.

Stagnation is defined by Huschke (14) as "the persistence of a given volume of air over a region, permitting an abnormal buildup of pollutants from sources within the region". Defining the establishment of stagnation as an uninterrupted period of daily average wind speed of 5.0 miles per hour or less and/or a peak gust of 15 miles per hour or less, Jenne (15)

---

* Fastest mile of wind is generally defined as either the fastest speed associated with 1 mile of passing wind or fastest observed 1 minute wind speed.

** According to Huschke (Glossary of Meteorology, 1959), the duration of a gust is usually less than 20 seconds.

compiled a 15-year summary of Hanford stagnation periods covering the months of November through February (1947-48 through 1961-62).

Both of the two most notable Hanford stagnation periods experienced during this time occurred in November and December 1952. The first period was from November 15 to December 3 (19 days). Then, after five days of ventilation, stagnation set in again December 9 and lasted through December 28 (20 days). Average wind speeds during the two periods were respectively, 2.6 and 2.9 miles per hour. Eleven days during the first period and eight during the second had peak gusts under 10 miles per hour. One day during the first period and two during the second had average speeds less than 1.0 miles per hour with peak "gusts" of 4 miles per hour. There were 13 days of fog in each period.

Although stagnation lasting for 20 days can be expected only one season in twenty, a 10-day stagnation period can be expected every other season. Only one season in three will fail to produce a stagnation period of at least eight days.

Air quality in the Hanford area, in terms of sulfur dioxide, nitrogen dioxide, and suspended particulates, is routinely measured by the Hanford Environmental Health Foundation. (18,29)

For the year 1971, SO2 measurement in Richland averaged less than 0.02 ppm. At other sampling stations, the concentrations were below the detection limit of 0.01 ppm. In 1974, all 24 hour sequential samples of SO2 measured in the vicinity of Richland, North Richland, and Hanford 300 Area had concentrations below the detection limit of 0.005 ppm which is 25% of the annual average ambient air standard of 0.02 ppm. The 1971 and 1974 measurements for NO2 and suspended particulates are shown below:

Air Quality Measurements-Annual Averages for 1971 and 1974 (18, 29[*])
(these data are based on 24 hour integrated samples)

		NO2 (pom)		
Location	*No. of Samples*	*Max.*	*Min.*	*Avg.*
Richland (747 Building)	*49*	*6.8*	*0.06*	*0.86*
Opposite Richland (Hobkirk Ranch)	*170* (*78*)	*0.019* (*0.022*)	*<.001* (*0.001*)	*0.005* (*0.006*)
Opposite N. Richland	*157*	*3.0*	*<.001*	*0.024*

[*] *Concentrations in parentheses are for 1974.*

[**] *High value due to a local dust storm.*

(Gilliam Ranch)	*(130)*	*(0.020)*	*(0.001)*	*(0.006)*
Opposite 300 Area	*170*	*0.025*	*0.001*	*0.005*
(Sullivan Ranch)	*(77)*	*(0.014)*	*(0.001)*	*(0.005)*
Ringold (Keys Ranch)	*166*	*0.028*	*0.001*	*0.006*
White Bluffs (McLane Ranch)	*149*	*0.028*	*0.001*	*0.006*

	Suspended Particulate ($\mu g/m+3$)			
Location	*No. of Samples*	*Max.*	*Min.*	*Avg.*
Richland (747 Building)	*42*	*440*	*25*	*120*
	(125)	*(572)***	*(8)*	*(57)*
Opposite Richland (Hobkirk Ranch)	-	-	-	-
Opposite N. Richland (Gilliam Ranch)	-	-	-	-
Opposite 300 Area (Sullivan Ranch)	-	-	-	-
Ringold (Keys Ranch)	-	-	-	-
White Bluffs (McLane Ranch)	-	-	-	-

The major cause of air pollution in the Hanford area is dust occurring during windy periods. The most significant sources are cultivated fields in the surrounding area. A limited amount of information is available regarding atmospheric dust loading in the Hanford area. Hilst and Nickola (16) conducted limited dust investigations over a range of wind speeds and to heights of 400 feet in the Hanford area. A portion of their findings is presented in Figure 2.3-5. Other investigations which have been made in the Hanford area and reported by Sehmel and Lloyd (17) demonstrate the dependence of airborne concentrations on wind speed as shown in Figure 2.3-6.

Measurements of the particulate burden in air at a specific observation point in the 200 Areas at Hanford showed values of around 100 micrograms per cubic meter of air when the wind was less than 8 mph. The particulate content increased when higher winds were present, averaging 1,000 micrograms per cubic meter with winds of 12 mph, and 3,000 micrograms per cubic meter with winds of 16 mph.

Additional considerations regarding the August 11, 1955 and January 11, 1972 dust storms shown in Figures 2.3-5 and 2.3-6 and other climatological dust storm characteristics at Hanford are contained in the following paragraphs.

2.3.1.2.1.5.1 Evaluation of August 11, 1955 and January 11, 1972 Dust Storms at Hanford. The wind speeds at 1.25 ft., 50 ft. and 400 ft. heights for the August 11, 1955 observation period were 14, 24, 31 mph respectively. Figure 2.3-5 represents atypical conditions for the site region. The case was originally selected for study as a situation with considerable airborne dust conditions compared to average conditions.

A Hanford climatological summary of dust storms is given in Table 2.3-40 for 1953-1970 (30). Dust dependence on wind speed and direction (50 ft.) at the Hanford Meteorological Station is given in Table 2.3-41 for the same period (30). Approximate values of dust concentrations are computed based on an empirical relationship using visibility observations (31). The relationship is

$$C6 = \frac{56}{v1.25}\ mg/m^3$$

where V is horizontal visibility in km. This is based on data from the Great Plains with visibilities 7 to 9 miles and wind speeds greater than 12 mph. Hourly weather observations at the Hanford Meteorological Station were used as input criteria to define a wind resuspension or dust storm period. Hours satisfying dust storm criteria at Hanford (1953-1970) had either visibilities less than 7 miles and dust reported, or visibilities between 7-14 miles, wind speeds greater than 5.8 m/s, and relative humidities less than 70%. Since the above empirical concentration - visibility relationship was based on observed dust concentrations at approximately 5-6 feet above the surface, any measured dust data should be interpolated to that height when comparing the measurements to the calculated 1953-1970 results of Table 2.3-41. (30)

The frequency of the hourly data satisfying the dust storm criteria at Hanford is given in Table 2.3-42. (30)

The August 11, 1955 dust storm has an interpolated 5-ft value of 17 mg/m^3 compared with the climatological average of about 7 mg/m^3. Further inspection of the climatological values in Table 2.3-41, supports a conclusion that the storm is an example of the more severe type of dust storm that occurs in this region.

Care must be taken in interpretation of Tables 2.3-40 to 2.3-42 to allow for certain limitations. Estimates based on visibilities and/or wind speeds outside the range used in formulation of Equation 1 are of unknown reliability. The average visibilities within each wind speed class were within the range of empirical validity except for the high wind cases. Another source of errors is the fact that the visibility observations are taken at specific times and are not hourly averages. Considering these limitations Tables 2.3-40 to 2.3-42 may be taken to represent overall aspects of the Hanford dust storm climatology. Individual values must be considered approximate estimates - particularly those based on only a few data points.

The extreme value in Table 2.3-41 in the 53 to 66 mph class (988 mg/m^3) represents a single observation of 0-1/16 miles visibility for a few minutes. Typically at the onset of a dust storm very low visibilities with high winds occur for a few minutes. The very limited visibility and high winds for such a period were coded for the data for that hour. The station log reveals that five minutes after the onset of this dust storm, the winds had dropped to 37 mph and visibility was 3/8 mile. The phenomenon was generated by a thunderstorm passing close to the station. Hence, the extreme value in Table 2.3-41 represents an occurrence of very short duration which was the onset of a dust storm that had a duration of about one hour. Qualitative observation indicates that this is not an atypical scenario. Over the 40 minute duration of the storm, the average calculated average dust concentration was 60 mg/m^3. It should be noted, however, that the onset concentration (988 mg/m^3) is of unknown validity because it is calculated from a visibility value for which the empirical model has not been validated.

The visibility during the January 11, 1972 storm was initially less than one mile, changing to four miles during the last half hour of the reported episode. The January 11, 1972 dust storm had winds at 50' WSW in the range 31 to 43 mph. Wind storms with peak gusts recorded at 50' on the Hanford Tower during this period have a three to four year return period at Hanford.

Actual particulate loading depends on other factors such as surface conditions and atmospheric stability. Hence, the wind gust return period does not necessarily apply to particulate loading although it is reasonable to assume the return period is not less than that for wind.

Detailed estimates of the particulate size and total mass concentrations cannot be accurately made for the January 11, 1972 dust storm as a result of the lack of any particle size distribution data. In addition, only one height of mass concentration datum (189 mg/m^3 at 0.2m) was made in the steep gradient region of the vertical profile. An indication of size distribution and mass loading profiles can be obtained from other data collected at Hanford. Sehmel (32) reports an April 1972 storm which has mass loadings near the surface which are similar to the January 11, 1972 storm. Although adjacent meteorological observations are not available for this episode, the fact that the mass loadings at the lower levels are of the same order as the January 11, 1972 dust storm provides a basis for comparison of the storms. The April 1972 storm has well documented mass loading profiles as a function of particle size. The table shown below contains the profiles of airborne soil concentrations as a function of particle diameter for the dust storm. These are based on optical measurements for smaller particles (.16 to 5 μm) at 0.9m and, impacter-cowl measurements for larger particles (1 to 230 μm) at the indicated heights. The mass loading is dominated by the larger particle data.

Soil Mass Loading for the April 1972 Dust Storm (mg/m^3)

Particle Diameter Range (μm)	*Height (m)* 0.3	1.0	2.0	3.0	10.	32.
0.9 - 5.0	*0.21*	*0.11*	*	*	*0.058*	*.0038*
5 - 20	*0.83*	*0.28*	*0.26*	*.25*	*0.070*	*.0056*
20 - 60	*14.*	*4.4*	*2.9*	*1.5*	*.81*	*.29*
60 - 240	*220.*	*6.6*	*2.8*	*1.3*	*.19*	*.11*
Total	*235*	*11.4*	*~6.0*	*~3.1*	*1.13*	*0.41*

Comparison of the dust loading of 6.0 mg/m^3 at 2 meters with the climatological summaries in Tables 2.3-41 and 2.3-42 indicates that this is a typical dust storm for the region.

The particle size distribution for the August 11, 1955 storm is shown in the following table for comparison.

Airborne Dust Loadings of Particles Greater Than 0.9μ For August 11, 1955 Dust Storm (mg/m^3)

Particle Diameter Range (μm)	*Height (m)* 0.38	2.0	15.2	30.5
0.9 - 5.0	*0.015*	*0.012*	*0.012*	*0.0079*
5 - 20	*0.39*	*0.32*	*0.23*	*0.17*
20 - 60	*3.1*	*2.2*	*1.1*	*0.77*
60 - 240	*18.*	*12.0*	*2.3*	*0.78*
Total	*22.*	*14.5*	*3.7*	*1.7*

The April 1972 dust storm has higher mass loadings near the surface in all size ranges. The August 11, 1955 dust storm had higher dust loadings above 1 to 2 m heights in the ranges greater than 5μ diameter. One interpretation of these profiles is that the 1972 storm had a source nearby and the 1955 data represents advection of airborne dust from more remote sources (33).

2.3.1.2.1.5.2 Hanford Dust Storm Climatology for Design and Operating Bases. *The Hanford climatological study of dust storms for 1953-1970 (30) (discussed in the previous subsection) was re-examined for the purpose of establishing the "worst case" dust storm which may have occurred during that period (33).* The worst case dust storm, i.e., that storm which had the largest calculated time integrated dust loading ($mg\text{-}hr/m^3$), is considered to be

* *No value in reference.*

160 mg-hr/m^2, duration of 18 hr, and average dust loading of 8.9 mg/m^3 at a height of 5 to 6 ft. The design basis dust storm is bounded by a postulated volcanic ashfall event (see Section 2.5.1.2.6) in the evaluation of the design and performance of HVAC systems and diesel generators. *Results of this worst case dust storm investigation are listed below. As mentioned above, these loadings would apply for a height of 5 to 6 feet above the ground.*

Detailed Estimates of the Dust Loadings for the Six Worst Storms Based on Surface Observations of the Hanford Meteorology Station, 1953-1970

Storm Number	*Total Dust Loading (mg-hr/m^3)*	*Actual Duration (hr)*	*Average Dust Loading (mg/m^3)*
1	*40**	*0.67*	*60*
2	*100*	*1.0*	*100*
3	*160*	*18***	*8.9*
4	*44*	*2.6*	*17*
5	*90*	*3.1*	*29*
6	*80*	*7*	*11*

The worst storm of these was storm No. 3. While it was also shown in this study that once a given dust storm terminated, there existed a 5% probability that another one would occur within 10 hours and a 50% probability that another one would occur within 30 days, none of the above six worst case dust storms had occurred within 30 days of each other. Most had occurred in different years during the 1953-1970 study period.

The dust loading for storm No. 3 is conservative in terms of its being considered as the worst case storm for use in plant design evaluations. As a result of the shorter storm durations of the measured August 11, 1955, January 11, 1972, and April 1972 dust storms, their time integrated dust loadings at 5-6 feet above the ground are not worse than that computed for storm No. 3 (33).

2.3.1.2.2 Design Snow Load

The American National Standards Institute (ANSI) in "Building Code Requirements for minimum Design Loads in Buildings and other Structures" (19) provides weights of 100-year return period ground level snow packs for the site region. The ANSI (Reference 2.3-19) value

---

* *Value is less than actual dust loading as a result of less than 1 hour duration.*

** *The detailed investigation yielded 18 hours as opposed to a range of 1-16 hours given in Table 2.3-40 of 2.3.1.2.1.5.1 for the range in duration of dust storms using the same 1953-1970 data.*

of 20 lb/ft^2 was used as the design snow load for all CGS structures.* Assuming a specific gravity of 0.1 or snow density 6.24 lb/ft^3, this design value corresponds to a snow depth of 3.2 ft. *The above snow load is conservative for the site as snow depth seldom exceeds six inches, and the greatest depth of 24.5 inches was recorded in February 1916. (4) The weight of the 48-hour probable maximum winter precipitation can be determined from the data presented in Table 2.3-3. Since the greatest snowfall in 24 hours was 10.2 inches (February 1993) and a record depth of approximately 12 inches lasted four days (December 1964) these depths would correspond to snow loads of 5.3 and 6.24 lb/ft^2 respectively.*

2.3.1.2.3 Meteorological Data Used for Evaluation of Ultimate Heat Sink

The ultimate heat sink is evaluated in Section 9.2.5.

The meteorological data presented in Figure 2.3-7 and Tables 2.3-1, 2.3-5, and 2.3-7a-7h was used to evaluate the performance of the CGS spray ponds in 9.2.5 with respect to (1) maximum evaporation and drift loss and (2) minimum water cooling. In accordance with Regulatory Guide 1.27, Rev. 1 "Ultimate Heat Sink for Nuclear Power Plants", the worst one-day and 30-day periods of meteorological record which resulted in minimum heat transfer to the atmosphere were established. The worst recorded 30-day period (30-day average) of maximum difference between dry-bulb and dewpoint temperature and highest simultaneously recorded wind speeds which resulted in the maximum evaporation and drift loss were also established.

Climatological moisture and temperature data presented as a function of time of day for each month in Figure 2.3-7, and wind statistics given in Table 2.3-5 were used to establish the maximum initial pond temperature for the ultimate heat sink analyses in 9.2.5. It was determined in 9.2.5 using these meteorological data, solar radiation formulas contained in ASHRAE Handbook of Fundamentals, and techniques outlined in the John Hopkins University Report "Cooling Water Studies" (Edison Electric Institute Research Report No. 5, Project RP-49, November 1969) that the month of July contained the worst average meteorological data which resulted in the maximum initial pond temperature.

The worst day meteorological data was considered to be the given combination of meteorological parameters in a particular consecutive twenty-four hour period which resulted in the worst pond thermal performance. The following recorded episodes of extreme wet bulb temperatures experienced at the CGS and/or HMS sites were evaluated in 9.2.5 to establish the worst pond thermal performance:

1) August 7-9, 1972 at CGS and HMS, presented in Table 2.3-7a (20),

* Ice loading is included in this CGS estimate.

2) July 4-12, 1975 at CGS, presented in Tables 2.3-7b to 2.3-7e from the onsite FSAR meteorological monitoring program,

3) August 4, 1961 at HMS, presented in Table 2.3-7f (21).

The meteorological conditions which occurred on July 10, 1975 at CGS resulted in the worst pond thermal performance as determined in 9.2.5.

The following worst month meteorological data were used in 9.2.5 to establish the second through thirtieth day worst pond thermal performance and worst 30-day drift loss and evaporation (Reference 2.3-21):

a) July 9 - August 8, 1961 at HMS, presented in Table 2.3-7a (minimum heat transfer)

b) July 2 - August 1, 1960 at HMS, presented in Table 2.3-7h (maximum evaporation and drift loss)

Diurnal variations in dry bulb and wet bulb temperatures for both 30-day periods assumed that the hourly temperature variation approximated a sine wave of one cycle in 24 hours (Reference 2.3-21). The average wind speeds during both 30-day periods was approximately 5.5 mph. The root mean square average of the hourly wind speed data for the 30-day mass loss period is 6.91 mph.

For conservatism in the thermal analysis, the worst day data for thermal performance was assumed to repeat in the analysis until pond temperature peaked (three days repetition). For conservatism in the mass loss analysis, an upper bound curve was fit to the drift loss data taken during spray pond testing. The drift loss value was obtained from this curve. See 9.2.5 for details.

2.3.2 LOCAL METEOROLOGY

2.3.2.1 Data Comparisons

The local meteorology prior to CGS plant operation at the CGS site can be described from FSAR meteorological data procured during the period April 1, 1974 to March 31, 1976 from the permanent onsite 7-ft and 245-ft meteorological towers. Data collected from the 245-ft CGS tower had been used for the short-term (accident) and long-term (routine) diffusion estimates. Onsite meteorological data were also obtained from a temporary 23-ft tower which commenced operation in April 1972 for the purpose of determining optimum cooling tower geometric orientation for performance during high wet bulb periods. The 23-ft meteorological tower data were also used with other regional data to establish the potential impact of proposed mechanical draft cooling tower atmospheric releases in the vicinity of CGS

(Reference 2.3-22). The permanent tower data have been compared where appropriate and possible, with simultaneously recorded and historical data obtained from the Hanford Meteorological Station (HMS) for the purpose of documenting the representativeness of the two years of onsite meteorological measurements. For the months of April through August 1974, comparisons have also been made with data from the onsite temporary tower; this tower and instrumentation were dismantled in September 1974. Monthly and annual average comparisons between simultaneously recorded and historical data for all the aforementioned meteorological tower sites have indicated that agreement between the data sources is reasonably good.

When comparing sources of data, it should be recognized that at any given time, significant differences can exist between the reported meteorological conditions at the CGS and HMS sites (see, for example, Table 2.3-7a). Differences in the frequencies of occurrence of various meteorological conditions at a given site can also exist from year to year or from one elevation to another elevation at a site for coincident observation times. Any discrepancies between summarized data sources can also be attributed (in addition to site separation and instrument height above ground) to differences in types and accuracies of instrumentation used and procedures considered for acquiring, processing, and analyzing raw meteorological data. Details regarding the onsite meteorological measurement program are presented in 2.3.3.

For the following data comparisons, the following definitions are used:

CGS[*]	*Data obtained from the permanent 7' and 245' towers at the CGS site; summarized here for April 1, 1974 - March 31, 1976.*
CGS (temp).	*Data obtained from the temporary 23' tower at the CGS site; summarized here for April 1, 1974 - August 31, 1975.*
HMS:	*Data obtained from the Hanford Meteorological Station; used here for April 1, 1974 - March 31, 1976.*
HMS (hist):	*Data obtained from the Hanford meteorology tower at the Hanford Meteorological Station, used here for various periods identified in the data comparison listings. The source is AEC Research and Development Report "Climatography of the Hanford Area", June 1972, BNWL-1605.*
Wind Variable:	*At CGS an hour of data which contains less than 15 minutes of any one direction sector; at Hanford, the same but for 20 minutes.*

---

[*]*Data obtained at the 33 foot (10 meter) elevation is presented since these data have been subsequently used in the site diffusion studies for postulated ground-level release cases.*

Wind Calm: *At CGS, an hour of data for which the average speed is 0.22 miles per hour or less; at Hanford, average speed less than 1 mph (as decided by weather observer, corresponds to no motion of strip-chart recorded pen).*

Sense of Delta T: *Positive values imply relative stability, negative values imply relative instability.*

The first annual cycle of CGS onsite meteorological data which covered the period April 1, 1974 through March 31, 1975 has been presented in detail. Local meteorological data collected during the second annual cycle (April 1, 1975 through March 31, 1976) generally portrayed the same characteristics as indicated by comparison with the first annual cycle data. Except for the high wet bulb episode experienced at CGS during July 1975 (refer to 2.3.1.2.3 and 2.3.2.3), no monitored onsite data proved to be more severe in terms of the design and operation of CGS than those data presented in 2.3.1.2. Hence, only the second annual cycle monthly averages have been presented in Table 2.3-8a which summarizes the two years of monitored on-site data with concurrently measured and historical HMS data. Any significant differences noted between first and second annual cycle onsite data and concurrently measured CGS and HMS data are discussed in 2.3.2.1. Otherwise, conclusions stated herein for the first annual cycle of data similarly apply to the second annual cycle data. It is observed in Table 2.3-8a that any year to year differences in the summarized monthly mean meteorological data at tend to parallel the differences in the means summarized for the HMS site for corresponding months during the two year monitoring period.

Summaries of joint frequency distributions of wind direction and wind speed by atmospheric stability class and results from accident and routine diffusion estimates for both annual cycles of CGS onsite meteorological data are presented in subsequent sections.

Magnetic tape files of the two years of hourly onsite data have been transmitted to the NRC.

2.3.2.1.1 Winds

Table 2.3-8b presents monthly and annual CGS joint wind speed and direction data for the first annual cycle of monitoring. Similar data for the HMS site are given in Table 2.3-9. The CGS data presented in the above tables were collected at an elevation of 33 feet above local grade for the one year period of record whereas the HMS historical data were collected at an elevation of 50 feet above local grade during the period 1955 through 1970 (HMS is approximately 280 feet higher in elevation than the CGS site). Additional wind direction frequency statistics are presented in Table 2.3-10.

The CGS 33 ft and CGS (temp) 23 ft wind direction data given in Table 2.3-10 have similar distributions of direction frequency and show a bimodal wind direction distribution from approximately South and also Northwest. These distributions differ from that given for the HMS site where the direction distribution displays a single peak at approximately West

Northwest to Northwest. Further, the wind direction distribution at the CGS site is much more uniform around the compass than it is at the HMS site. The differences in these distributions may be attributed to the influence of terrain features, causing variability of air flow at the CGS site. This conclusion is strengthened by the observation that the CGS monthly wind frequency distributions are similar through-out the period of data acquisition.

Tables 2.3-11 and 2.3-12 provide the 20 longest occurrences of wind direction persistence at CGS for an elevation of 33 feet. Table 2.3-11 shows persistence in one (22.5 degree) sector while Table 2.3-12 shows persistence within two (45 degrees) adjoining sectors; the corresponding stability class distributions and average wind speed within each stability class are also provided.

It is noted that the majority of the periods of high direction persistence at CGS are associated with unstable, neutral, and moderately stable atmospheric conditions and moderate to strong wind speeds. These represent relatively good diffusion conditions. Table 2.3-12a summarizes the longest persistences of wind direction in one and two sectors at CGS measured during the first and second annual cycles. The annual frequency and duration of episodes of high wind direction persistence at CGS depend upon the frequency and intensity of weather systems which result in regional large scale gradient flow. For example, during the first annual cycle, the longest persistence in one and two sectors lasted 14 hours (NW) and 26 hours (NW, NNW) respectively. During the second annual cycle, the longest persistence in one and two sectors lasted 33 hours (NNE) and 35 hours (N, NNE) respectively. Whereas the longest persistence in one sector during the first annual cycle lasted 14 hours, the duration of the first three longest persistences in one sector during the second annual cycle (33 hours from NNE, 20 hours from SSW, and 16 hours from NW) exceeded that longest duration.

Table 2.3-13 presents monthly frequency distributions and averages of wind speed measured at the CGS and HMS sites. Considering site separation, elevation of sensors, and instrumentation and procedural differences, the CGS wind data appear meteorologically reasonable and demonstrate consistency among data sources.

2.3.2.1.2 Moisture and Temperature

Diurnal variation and averages of dry-bulb, wet-bulb, and dew-point temperatures for the first annual cycle of monitoring at the CGS and HMS sites are given in Tables 2.3-14 to 2.3-16. Tables 2.3-17 to 2.3-19 present frequency distributions of dry-bulb, wet-bulb, and dewpoint temperatures, summarized for the first year of CGS site observations. Table 2.3-20 contains additional climatological summaries of monthly normals and extreme values of temperature and humidity measured at HMS.

Considering the 280 ft difference between the CGS and HMS sites and assuming a dry adiabatic lapse rate of 5.48°F/1000 ft, one can expect a temperature difference of about 1.5°F between the dry-bulb temperature data measured at both sites.

Higher monthly average wet-bulb and dewpoint temperatures occurred at CGS since the CGS site experienced air of slightly higher moisture content than the HMS site. The higher moisture content may be attributed to Columbia River proximity and irrigation of the fields in the vicinity of CGS. This conclusion is strengthened by the fact that moisture enhancement at CGS was at a minimum for the months of January, February, and March during the first annual cycle of CGS site observations.

During the second annual cycle of monitoring, it was observed that the CGS site experienced air of essentially the same moisture content as did the HMS site. The absence of the moisture enhancement at CGS, which was noted during the first annual cycle, may be attributed to reduced evaporation from the proximate river and irrigated fields. The periodic occurrences (during the second annual cycle) of cooler dry-bulb temperatures and precipitation deficits when high dry-bulb temperatures prevailed may have resulted in reduced evaporation.

2.3.2.1.3 Monthly Precipitation

Diurnal variation of precipitation intensity at CGS and monthly total precipitation at CGS and HMS for the first annual cycle of monitoring are given in Table 2.3-21. Frequency of occurrence of precipitation intensity data from April 1974 through March 1975 at CGS are presented in Table 2.3-22. Frequency of occurrence of wind speed and direction versus precipitation intensity for the same year of data is given in Table 2.3-22a. The data show that the CGS site experienced less precipitation than did the HMS site. The difference can be attributed to site separation and the incidence of precipitation falling in the form of showers of quite limited spatial extent. The precipitation deficit at CGS may also result from a rain shadow effect from Rattlesnake Mountain. A precipitation gradient is known to exist along the slope of this terrain feature.

2.3.2.1.4 Fog

Fog data are unavailable for the site. Although fog has been observed in every month of the year at HMS, it is essentially a seasonal phenomenon with 95 percent of it observed during the months of November through February. Inclusion of March and October fog would increase this percentage to 99.7. Tables 2.3-23 and 24 summarize the duration and persistence statistics for fog occurrences at HMS. Because of the relative proximity of the site to the Columbia River, it is expected that the frequency of occurrence, intensity and duration of fog would be somewhat greater than these data indicate (refer also to 2.3.2.1.5).

Most fog in the Hanford region is of the radiation type and hence occurs mostly in conjunction with light wind, inversion or stable atmospheric conditions. The occurrence of fog at the site can therefore be considered as one visual indicator of poor atmospheric diffusion conditions. Advection and frontal fogs occur occasionally at both HMS and the Tri-City stations of Richland and Pasco. In addition, at Richland and Pasco, there are occasional occurrences of

steam fog from the Columbia River. These are not usually deep and many would be classified as ground fog.

Statistics on fog persistence are limited to those at HMS. Although most dense (visibility 1/4 mile or less) fogs do not last longer than 3 hours, a few run for much longer periods as shown in Table 2.3-23. After a period of fog, there frequently follows a period of atmospheric stagnation with a low stratus overcast and light winds. Such conditions may persist for many days.

2.3.2.1.5 Stability Summaries

For the purposes of comparison, the t Δ (temperature difference) and sigma theta (standard deviation of the horizontal wind direction fluctuations) stability classifications which are used in diffusion studies at Hanford are given below with the t Δ"Pasquill" and sigma theta classes identified in NRC Regulatory Guide 1.23:

REGULATORY GUIDE 1.23

Pasquill Class		*Δt/ΔZ (°F/200 FT)*	*Sigma* Theta*
Extremely unstable	*A*	*Less than -2.1*	*25.0*
Moderately unstable	*B*	*-2.1 to -1.9*	*20.0*
Slightly unstable	*C*	*-1.9 to -1.6*	*15.0*
Neutral	*D*	*-1.6 to -0.6*	*10.0*
Slightly stable	*E*	*-0.6 to 1.6*	*5.0*
Moderately stable	*F*	*1.6 to 4.4*	*2.5*
Extremely stable	*G*	*greater than 4.4*	*1.7*

HANFORD RESERVATION CLASSIFICATION

Pasquill Class	*Δt/ΔZ (°F/200 FT)*	*Sigma Theta Groupings** (Degrees)*
Very unstable	*Less than -2.5*	*greater than 22.5*
Unstable	*-2.5 to -1.5*	*25.5 to 17.5*
		17.5 to 12.5

* *Period of 15 minutes to 1 hour.*

** *Note that these sigma theta groupings do not necessarily correspond to any particular Hanford Stability Class on the left, i.e., there can be a maximum of 35 group combinations of Δt/ΔZ and sigma theta although some combinations are unlikely to occur.*

Neutral	*-1.5 to 0.5*	*12.5 to 7.5* *7.5 to 3.75*
Moderately Stable	*0.5 to 3.5*	*3.75 to 2.1*
Very Stable	*greater than 3.5*	*less than 2.1*

Joint frequency distributions of wind speed and direction by atmospheric stability class (temperature difference and sigma theta combinations) for the first and second annual cycles of monitoring are presented in Section 2.3.3. Percent frequency of occurrence of stability (Δt distribution) at CGS and HMS are given in Table 2.3-25. Although the heights over which Δt was measured are similar for both sites, it is observed in Table 2.3-25 that CGS experiences air of greater thermal stability than HMS. This discrepancy between site stabilities may be accounted for because of terrain differences. The CGS site serves as a drainage basin for relatively cool air (especially at night), resulting in strong thermal low-level stratification and the formation of persistent temperature inversions. This conclusion is strengthened by the observation that the difference between the sites is much more pronounced during July, August, September and October than during all other months. It is during these months that pooling of relatively cool air is at a maximum due, partly, to minimum cloudiness and therefore, enhanced nocturnal cooling occurs at the ground. It is noted in Table 2.3-25 that the percent frequencies of stability types for both annual cycles of monitoring at CGS are very similar.

Frequencies of occurrence of Δt and sigma theta versus time of day for the first year of onsite meteorological measurements are given in Table 2.3-26 and 2.3-27. Although frequency of occurrence and duration of inversion conditions were not analyzed for the site, stagnation and inversion information contained in 2.3.1.2.1.5 and 2.3.2.1.5 for HMS should be representative for the site (except for the fact that the above data indicates that CGS experiences a greater frequency of surface-based inversions than does HMS). Figure 2.3-8 shows probabilities of inversion persistence at HMS from 1952-1969 (2).

2.3.2.2 Potential Influence of the Plant and Its Facilities on Local Meteorology

The shapes and sizes of the buildings erected on the plant site will produce a disturbed air flow which alters the initial distribution pattern and diffusion rates of plant release airborne contaminants. In the diffusion calculations this effect is considered.

Electrical power generation by steam turbines requires dissipation of large quantities of low grade thermal energy. Waste heat produced from the operation of CGS is dissipated by means of six circular mechanical draft cooling towers. These evaporative cooling towers release waste heat directly to the atmosphere in the form of sensible and latent heat. An extended visible plume consisting of liquid water droplets can occur principally during the winter months when periods of cold weather and high relative humidity prevail. Fogging is defined as occurring if visible plumes intersect the ground, buildings, or other elevated structures.

Fog occurs naturally in this region, and any cooling tower fog is an extension of the naturally occurring phenomenon. When air temperatures of 0°C or lower prevail, the additional potential exists for icing on these surfaces. At times, small cumulus clouds could form above or remote from the plant, depending on the atmospheric temperature and moisture conditions in the first several thousand feet above the cooling towers. No significant environmental or atmospheric impacts arising from CGS cooling tower operation have been observed or are foreseen based on dispersion meteorological studies performed by Battelle Northwest Laboratories (Reference 2.3-22). Details covering potential environmental impacts arising from CGS cooling tower operation are given in the CGS Environmental Report.

2.3.2.3 Local Meteorological Conditions for Design and Operating Bases

The regional long term meteorological conditions provided in Section 2.3.1.2 are applicable for use in establishing the plant design and station operating bases. Except for the high wet bulb episode experienced at CGS during July 1975 (refer to 2.3.1.2.3), none of the local short term meteorological data presented in 2.3.2.1 proved to be more severe in terms of the design and operation of CGS than those presented in 2.3.1.2. Data collected since January 1, 1984 form the revised long-term design and operating basis for dispersion calculation.

2.3.2.4 Topographic Description

As shown in Figures 2.1-1 and 2.1-2, the plant is located at a grade elevation of 441 feet MSL in a basin area formed by the Saddle Mountains to the northwest, bluffs and hills rising to about 900 feet MSL to the north and east, the Horse Heaven Hills to the south and the Rattlesnake Hills and Yakima, Umtanum and Manastach ridges to the west. Topographic cross-sections plotted out to 10 kilometers by sector from the plant are given in Figure 2.3-9. Except for the cliffs toward the east across the Columbia River, the region within this circumference is basically flat and featureless and slopes gradually toward the Columbia River. Additional details regarding the regional topography and geology are given in 2.5. The effects of regional topography on local meteorology are discussed in 2.3.1.1, 2.3.2.1.1 and 2.3.2.1.5. The need to consider plume height relative to land elevations has been obviated by the assumption of a ground-level release for the accident and routine station release cases which are presented in 2.3.4 and 2.3.5.

2.3.3 ONSITE METEOROLOGICAL MEASUREMENT PROGRAM

The permanent onsite meteorological data collection system in use since January 23, 1974 consisted of a 240 ft main tower, an auxiliary seven ft instrument mast, sensors with associated

electronics and recording devices, and a meteorological shelter.[*] A 23 ft onsite temporary tower was also used during the period April 1, 1972 through August 31, 1974.

The Battelle Memorial Institute, Pacific Northwest Laboratories, had been conducting a continuing two year program of acquisition, processing, and analysis of meteorological data for Energy Northwest Columbia Generating Station in a contractual arrangement with Burns and Roe, Inc.

The first and second annual cycles of reliable meteorological data were collected during the periods April 1, 1974 through March 31, 1975 and April 1, 1975 through March 31, 1976, respectively. The accuracy of these data had been established primarily through calibrations conducted at quarterly intervals as required through a formal program of quality assurance. The data were examined for meteorological reasonableness, after corrections were applied per the calibration Reports, through computer edit programs. No data were found to be unreasonable. The annual summaries were compared with the monthly summaries and all were found to be consistent. The computer summarization programs (identical for monthly and annual purposes) were tested at quarterly intervals by application to dummy data per the quality assurance program. (23) The computer calculation programs for x/Q were similarly tested. Comparisons between CGS meteorological data and concurrently measured and historical HMS data have been presented in 2.3.2.1.

2.3.3.1 Permanent Onsite Meteorological Tower and Instrumentation Characteristics

The meteorological tower, which is located approximately 2,500 feet west of the CGS plant site with its base at 455' MSL, consists of a 240 ft high primary tower with a five ft mast extending above it. The primary tower is triangular in shape and of open lattice construction to minimize tower interference with meteorological measurements. Wind and temperature measurements were made at the top of the mast and at the 33 ft level. The dewpoint temperature was measured at the 33 ft level. At the lower level the instruments were mounted on an eight ft horizontal boom extending southwest of the tower. Wind and temperature measurements were also made at the top of a seven ft mast which was located approximately 80 feet southwest of the 245 ft tower.

Wind speed measurements were made using conventional cup anemometers (Climet Instruments, Model 011-1 Wind Speed Transmitter) which have a response threshold of about 0.6 mph and a distance constant of less than five feet. Over a calibrated range of 0.6 to 90 mph the accuracy of these instruments is ± 1% or 0.15 mph (whichever is greater).

---

[*]Data collection on the 240 foot and seven foot towers was terminated on June 1, 1976 subsequent to the collection of two years of reliable tower data ending March 31, 1976, required for the CGS FSAR. Data collection on the Primary and backup towers began on July 1, 1984.

Wind direction measurements were made using lightweight vanes (Climet Instruments, Model 012-10 Wind Direction Transmitter).

The response threshold of these vanes is about 0.75 mph, and their damping ratio and distance constant are approximately 0.4 and 3.3 feet, respectively. Dual potentiometers in the Wind Direction Transmitter produce an electrical signal covering 540° in azimuth with an accuracy of ±3°. In addition, electronics had been included to provide signals which were proportional to the standard deviation of the wind direction fluctuations at each level.

Temperature instrumentation had been installed to provide measurements of both the ambient air temperature at the 245, 33 and 7 ft levels, as well as the temperature differences between these levels. The ambient air temperature and the temperature difference measurement systems were independent of each other to provide for reliability. Atmospheric stability delta - T classes were determined solely on the basis of the data from the electronic differencing bridge and not by subtracting the ambient air temperature measurements. All temperature measurements for both systems were made in aspirated radiation shields (Climet Instruments Model 016-1 or -2) using platinum resistance temperature detectors (Rosemount Engineering Co., Model 104 MB6ABCA). These instruments provided an ambient temperature range from -30°F to ±130°F and a temperature difference range of ±15°F. The accuracy of the instruments is ±.09°F in the measurement of temperatures and ±0.18°F in the measurement of temperature differences.

The dewpoint temperature was measured at the 33 ft level of the tower using a lithium chloride dewpoint sensor (Climet Instruments, Model 015-12) housed in an aspirated radiation shield (Climet Instruments Model 016-2). Precipitation was measured at ground level using a tipping bucket rain gage (Meteorology Research Incorporated, Model 302) located about 40 feet west of the main tower. This instrument is accurate to within 1% at rainfall rates up to 3 in./hr and has a resolution of 0.01 in. The instrument building provided a semi-controlled environment near the tower to house the instrument electronics and record the data. Analog strip chart and digital magnetic tape recorders were used to provide redundant data recording capability. The primary data recording system was a seven-track digital magnetic tape recorder (Kennedy, Model 1600) which used 1/2 inch tape. Logarithmically time-averaged wind speed, wind direction, temperature, temperature difference and dewpoint temperature signals were recorded at five minute intervals. The time constant of the averaging process was five to ten minutes. The standard deviation of wind direction fluctuations during the preceding five minutes at each level and the total precipitation were recorded along with the wind and temperature information. All data, except the wind direction standard deviations, were also recorded on strip charts which provided a backup data record to enhance data retrievability. In addition, since the strip charts contained an essentially instantaneous record of the signal from each instrument, they provided a rapid means of identifying instrument malfunctions and were useful in system calibration. These strip charts and magnetic tapes were changed weekly.

In summary, the total system accuracies for the measured meteorological parameters meet or exceed the following specifications:

air temperature	*±0.5°C*
temperature difference	*±0.2°C*
humidity (dew point)	*±2.8°C*
wind speed	*±0.5 mph from 0.5 to 5 mph, ±10% of reading above 5 mph per RG 1.97, Rev. 3.*
wind direction	*±5°*

These are verified by the end-to-end calibrations. Data recovery was better than 90%.

2.3.3.2 Quality Assurance Program

To ensure the quality of the meteorological data collected by the monitoring system, an extensive quality assurance program had been instituted. This program covered all phases of meteorological monitoring from the initial instrument acquisition through the analysis of data. Periodic checks and calibration of the instrument systems and individual components had been instituted. These periodic checks ranged from daily inspection of the strip charts to semiannual calibration of the complete system. All checks, calibrations and maintenance were fully documented, including traceability of test and calibration equipment to the National Bureau of Standards where necessary. Once collected, the data were protected from loss to the maximum extent possible; the digital tapes were examined to identify possible instrumentation malfunctions; and the data were then copied onto two master tapes. The original weekly tape and one master tape were stored in vaults for safekeeping while the second master tape was used in the preparation of data summaries. Finally, to ensure proper operation of computer hardware and software, all computer programs used to summarize or analyze the data were checked quarterly using a standard data input. The computer output from these tests was then saved to document computer operation.

The various phases of the quality assurance program pertaining to the two years of permanent onsite meteorological monitoring and data processing are discussed in the following subsections.

2.3.3.2.1 Data Recovery During April 1, 1974 - March 31, 1976

The meteorological data acquisition system was put into operation during January 1974. Outages in the digital system precluded an initiation date for the acquisition of reliable data prior to April 1, 1974 because the processing of an inordinate amount of data from strip charts

would have been required. The data utilized in the production of the monthly and annual summaries have been obtained exclusively with the primary data recording equipment (magnetic tape digital system) since August 1, 1974.

Recourse to data recorded on strip charts was required at times prior to August 1974 to assure, as viewed at the time, a recovery rate of 90% representative data as required by Nuclear Regulatory Guide 1.23. The percentages of monthly data read from strip charts is listed below:

April 1974 - 23.3%

May 1974 - 8.3%

June 1974 - 49.5% (W/S 33' - 59.1%)

July 1974 - 1.6%

From routine and anticipated causes (system maintenance and calibration) modest data losses were experienced on the order of 2% and 1.2% for the first and second annual cycles of onsite data collection respectively. A comparable amount, for some of the meteorological quantities, was caused by circumstances beyond Battelle's control (power outages, delay in receipt of spare parts, etc.). The percentages of missing annual data for various meteorological quantities are listed below:

	April 1, 1974- March 31, 1975	*April 1, 1975 March 31, 1976*
Wind Speed 33'	*4.0%*	*2.7%*
Wind Direction 33'	*4.0%*	*1.5%*
Dry Bulb Temperature 33'	*2.5%*	*1.2%*
Wet Bulb, Dewpoint Temperature 33'	*2.7%*	*1.2%*
Differential Temperature 33' - 245'	*3.1%*	*1.5%*

These percentages are representative of missing data for all meteorological quantities except precipitation. During the first annual cycle of monitoring, data recovery for precipitation was 100%. Precipitation data recovery was complete during the second annual cycle of monitoring, except possibly during December 1975 when a sand plug was discovered in the rain gauge funnel. As a result, it was estimated that less than 0.1 inch of precipitation was not recorded during that month. For the first annual cycle of monitoring, the data recovery rate was 96% or better for all meteorological quantities; this rata was 97% or better during the second annual cycle of monitoring.

2.3.3.2.2 Maintenance and Calibration

Assurance of quality data rests primarily with the calibrations performed at quarterly intervals and reported for July and October 1974; January, April, July and October 1975; and January and April 1976.

All evidence to date obtained through formal calibrations and routine daily and weekly inspection had demonstrated that the meteorological system remained electronically stable in terms of obtaining data of sufficient quality to meet the requirements in Regulatory Guide 1.23. The calibration corrections required are tabulated in the response to NRC question 6.4 on the FER. The calibrations established any system inaccuracies by comparisons to standards. These inaccuracies were corrected by appropriately adjusting the data at the data processing stage as opposed to adjusting the system electronics. The calibrations before and after each calibration period were used to determine if corrections were required to account for drift or if offset had occurred. No drift corrections were required. The offsets were discussed in the FER response. For corrections that were not constant throughout the range of a given parameter, a calibration table or curve was used to correct the data. Calibration corrections were applied as part of the computer programs used to edit and translate the data from the original raw-data tapes to a master file of hourly values.

2.3.3.2.3 Data Processing and Analysis

For the two years (1974-1976) of onsite FSAR meteorological monitoring at CGS, all data (magnetic tape and strip chart where required) were run through computer edit programs. No data were found to be unreasonable except for known causes as documented in Nonconformance Reports. Data corrections, per the Calibration Reports, were applied in the computer programs. Summarization of data has been accomplished only at such times as calibration information was available to bracket in time the acquired data.

The data for each hour is represented by an average of the data for the last 30 minutes in the hour. The averaging period of 30 minutes was selected for consistency with 1) the data used to formulate the Hanford Diffusion Model used for routine and accident dose calculations, 2) the recommendations in Regulatory Guide 1.23, and 3) computational economy. The only exception was wind direction which was averaged over one-hour to facilitate the formulation of wind direction persistence summaries.

One thirty-minute period per hour is considered adequate for climatological summaries consisting of averages of many hours. In addition, x/Qs based on thirty-minute averages will be conservative for estimates of the one-hour averages. All data products were based on these "hourly" averages.

Wet bulb from the permanent tower was obtained from standard psychrometric formulas presented in the Smithsonian Meteorological Tables, 1971 issue.

The above descriptions relate to data collected and used in FSAR submittals through Amendment #36. Data collection and processing since July 1, 1983 is described in 2.3.3.2.4. The Kennedy Tape Recorder has been replaced with a floppy disk recorder for increased reliability.

In several of the monthly summary reports, the computer programs as applied to dummy data have been compiled as called for in the Quality Assurance Manual (Reference 2.3-23) for the purpose of documenting proper programming and proper computer performance.

These computer computations have been verified with hand calculations made with the dummy data. The computational programs for x/Q were similarly tested.

2.3.3.2.4 Meteorological Monitoring Program During Plant Operation

The meteorological tower, which is located approximately 2500 ft west of the CGS plant site with its base at 455 ft msl consists of a 240-ft high primary tower with a 5-ft mast extending above it. This tower is triangular in shape and of open lattice construction to minimize tower interference with meteorological measurements. Wind and temperature measurements are made at the top of the mast and at the 33-ft elevation by duplicate sets of instruments. One set of instruments is the primary measurement system and the other set constitutes the backup instrumentation. The lower elevation wind speed/direction instruments are mounted on a horizontal boom, extending southwest of the tower.

Wind speed and wind direction measurements are made with a single instrument package that combines a wind speed propeller on the leading (upwind) end of the instrument and a wind direction vane, or tail, on the opposite end. Wind speed measurement range is 0.5 to 90 mph with a threshold sensitivity of about 1 mph. The wind direction measurements are made by the wind passing over the wind vane portion of the instrument. In addition, electronic modules process the data from these instruments and provide output data which is proportional to the standard deviation of the wind direction fluctuations over 15 minutes.

Temperature instrumentation provides measurements of the ambient air temperature at the 245 and 33-ft elevations. Temperature measurements are made in aspirated radiation shields using platinum RTDs. These instruments provide an ambient temperature range from -50°F to +150°F. Each set of RTDs (one from 33 ft level and one from 245 ft level) are calibrated together in the same temperature bath and electronic modules process the data from these instruments to provide a temperature difference range of ±15°F.

The relative humidity is measured at the 33-ft elevation of the tower using an intercap sensor with a range of 0 to 100% RH housed in an aspirated radiation shield. Precipitation is measured at ground level using a tipping bucket rain gauge located about 40-ft west of the main tower. The barometric pressure is measured by a pressure transmitter located inside the

Met Tower building. The Met Tower building provides a semi-controlled environment near the tower to house the instrument electronics. Signal conditioning is provided in the Met Tower by two GE FANUC PLC controllers, one for the primary instrumentation and one for the backup instrumentation. The primary controller feeds data to the Supervisory System and the PDIS via the LAN. The backup controller feeds data only to the PDIS via the LAN. Information will be available to all locations for both the primary and backup instruments on the LAN. The backup system does not provide data for the barometric pressure or the rain gauge. Wind speed, wind direction, temperature, temperature difference and relative humidity signals are averaged by the controllers using a 15 minute time constant device before sending the information to the control room. In the control room are three recorders which record 245-ft and 33-ft wind speed, wind direction, delta temperature, and ambient temperature at 33-ft elevation. The system accuracies for the measured meteorological parameters are demonstrated to meet or exceed the following specifications by performance of instrument loop calibrations:

Air temperature	±0.5°C (±0.9°F)
Temperature difference	±0.2°C (±0.36°F)
Humidity (dew point)	±2.8°C (±5.0°F)
Wind speed	±0.50 mph from 0.5 to 5 mph, ±10% of reading above 5 mph per RG 1.97, Rev. 3.
Wind direction	±5.0°

This data is processed by the Supervisory System which forms the primary communication vehicle for the meteorological system. The supervisory system located at the meteorological tower building and the control room digitizes and multiplexes the data to the control room where it is restored to analog format and sent to recorders and the PPCRS, as required, on a real-time basis. The data input to the supervisory system is 15-minute average analog values. Longer period averages will also be computed for trend analysis and report generation. These data are routed to satisfy display and processing requirements of the onsite technical support centers (TSC) and the emergency operations facility (EOF). The primary meteorological tower data is stored by the plant data acquisition system. Instrument calibrations and maintenance procedures meet the data recovery and system accuracy requirements of Regulatory Guide 1.23 except as noted above.

The Emergency Dose Projection system provides redundant data communication paths with remote access and redundant power sources as required for routine or emergency preparedness support. The near real time access to both the primary and backup meteorology systems, via the supervisory system or the LAN, thus satisfies the emergency preparedness requirements of Regulatory Guide 1.23.

These two systems are designed to meet or exceed data unavailability statements of Regulatory Guide 1.23. If offsite meteorological data is needed, data can be obtained from a network of meteorological towers located on the Hanford Site using methods described in the Emergency

Preparedness Plan. The accuracy, calibration, and reliability of all data not directly controllable by Energy Northwest is determined by the private/governmental controlling agency.

2.3.3.3 Other Meteorological Measurement Programs Considered for the Data Comparisons

2.3.3.3.1 CGS Temporary Tower

A temporary 23-ft onsite tower was used during the period April 1, 1972, through August 31, 1974, to obtain data input for CGS environmental studies and to provide a comparative overlap with the initially measured permanent tower data.

The temporary tower was located in the vicinity of the permanent towers with its base at approximately 448 ft msl. Wind data from the temporary tower were obtained at the 23-ft level while temperature data were acquired at the 3-ft level. Wet bulb data from the temporary tower were established from techniques and data contained in the U.S. Department of Commerce, Weather Bureau Office Document, Relative Humidity and Dewpoint Table. As a special quality assurance program was not initiated for the temporary tower installation, it is not possible to assert that this tower's data complied with the requirements contained in Regulatory Guide 1.23.

2.3.3.3.2 Hanford Meteorological Station

The Hanford Site maintains a network of meteorological towers, which can be accessed for data by telephone or electronic form.

2.3.3.4 Joint Stability - Wind Frequency Summaries

Joint frequencies of wind direction and wind speed by atmospheric stability class (sigma theta by Δt classes), collected at the 33 ft level of the permanent tower during the period from January 1, 1984 to December 31, 1989 are presented in Table 2.3-28A.

The sigma theta/Δt stability classification approach (see 2.3.2.1.5) has been used by Battelle to maintain consistency with the longer term HMS data to which existing data is compared and to satisfy the data requirements of the Hanford Diffusion Model (HDM) the HDM requires joint measurements of sigma theta and Δt for the more restrictive stable diffusion cases and utilizes the Sutton method with locally derived parameters for neutral and unstable cases (21). The HDM differs from the standard NRC diffusion models as a result of the incorporation of empirically derived diffusion coefficients based on historical experiments performed at Hanford. As a result of the extensive experimental data that were used in deriving the HDM, itis appropriate to consider this model when performing diffusion analysis at the Hanford Reservation.

In 2.3.2.1, comparisons between measured CGS onsite data and simultaneously recorded and historical HMS data illustrated the following differences between sites:

a. The CGS site experienced a small air moisture enhancement during the first annual cycle of monitoring. During the second annual cycle, the CGS site experienced air of essentially the same moisture content as did the HMS site.

b. The CGS site experiences a biomodal wind direction distribution from approximately south and also northwest. At HMS, the direction distribution displays a single peak at approximately west northwest to northwest.

c. The CGS site experiences air of greater thermal stability than does HMS.

Reasons for these differences were given in 2.3.2.1.

2.3.4 SHORT TERM DIFFUSION ESTIMATES

2.3.4.1 Objective

In this section brief descriptions of the sources, the receptors, and the methodologies used to calculate the air dispersion factors, χ/Q, for the Exclusion Area Boundary (EAB), the Low Population Zone (LPZ), and the control room are presented.

2.3.4.2 Exclusion Area Boundary

The EAB is located at a distance of 1950 m (approximately 1.2 miles) from the site. The χ/Qs were calculated using site-specific meteorological data from 1996 to 1999, (Reference 2.3-38). The Joint Frequency Distributions (JFDs), Table 2.3-28, were used as an input to the computer code PAVAN, (Reference 2.3-25) and the χ/Q results are presented in Table 2.3-37.

The χ/Q values at the EAB are calculated for each hour of data. The cumulative probability distribution of these values are determined for each of the wind direction sectors. Two distributions are calculated, Pasquill-Gifford (P-G) with meander sigmas and desert sigmas (includes meander). The distributions represent the annual probabilities that the given χ/Q values will be exceeded in each wind direction sector at the exclusion area distance. Table 2.3-34 incorporates the P-G meander effect and Table 2.3-33 has desert sigmas. From each of the sixteen sector distributions, the χ/Q value which is exceeded 0.5 percent of the total time was selected. This value was selected based on the percentage of total observations rather than the percentage of observations that the wind direction is within the appropriate sector. These 16 sector χ/Q values are given in Tables 2.3-33 through 2.3-34. The highest of these sixteen values is defined as the maximum sector χ/Q value.

2.3.4.3 Low Population Zone

The LPZ is located at a distance of 4827 m (approximately 3 miles) from the site. The χ/Qs were calculated using site specific meteorological data from 1996 to 1999, (Reference 2.3-38), the JFDs, Table 2.3-28, were used as an input to the computer code PAVAN, (Reference 2.3-25) and the χ/Q results are presented in Table 2.3-37.

The sector χ/Q values at the LPZ have been estimated for various fixed time intervals of a 30-day period. These time intervals are 0 - 2 hours, 2 - 8 hours, 8 - 24 hours, and 1 - 30 days. The estimates for these time periods are made by interpolation on a log-log plot of the two-hour and annual average values as described by Regulatory Guide 1.145. These interpolations are carried out for the value which is exceeded 5 percent of the time, and 0.5 percent of the time. The interpolations are displayed in Tables 2.3-35 (Desert) through 2.3-36 (P-G, meander). For these interpolations the 2-hour values are assumed equivalent to the 1-hour values. These depictions and interpolation schemes are identical to those specified in Regulatory Guide 1.145.

2.3.4.4 Control Room

The control room air dispersion factors χ/Q were calculated using the 1996 to 1999 site-specific hourly meteorological data, (Reference 2.3-37). The meteorological data and the input parameters were used as input to the computer code ARCON96, (Reference 2.3-36), and the χ/Q results are presented in Table 2.3-37.

2.3.4.5 Description of Sources

There are 4 sources at CGS that could release radioactivity to the environment following an accident. These sources are described below:

a. The roofline source is a vent (short stack) on top of the reactor building at a height of 70 m (approximately 229 ft) above the ground through which routine releases take place. Following an accident, the exhaust air from the reactor building passes through the SGT filtration system before exiting through the roofline stack. This source is treated as a ground level point source in the χ/Q calculations.

b. The reactor building railroad bay doors are located at the ground level on the eastside wall of the reactor building. It is assumed that some leakage to the environment takes place through these doors.

c. The reactor building walls from the 606 ft level to the 670 ft level (top of reactor building) are made of metal sheets and therefore they are assumed to be

a diffuse source capable of leaking radioactive materials to the atmosphere, this source is also treated as a ground level release source.

d. The Turbine Building Exhaust System (TBES) is a set of four circular vents (short stacks) located on top of the radwaste building roof. Air from the turbine building is exhausted to the atmosphere through these 4 vents.

2.3.4.6 Control Room Intakes

There are three intakes at CGS which draw air into the control room during normal operation as well as post accident. A description of these intakes is given below:

a. Local intake point: The local intake point is a vent located on the west side of the radwaste building wall at an elevation of 527 ft (26.5 m above the ground).

b. Remote intakes: there are two ground level remote intake points which are approximately 180 degrees from each other. One remote intake is located to the north-west side of the turbine building and is labeled remote-1, the other is located to the south-east side of the reactor building and is labeled remote-2.

2.3.4.7 Calculations

Formulations for calculating short term χ/Q values have been developed for licensing of nuclear power plants and are described in Regulatory Guide 1.145, (Reference 2.3-26) "Atmospheric Dispersion Models for Potential Accident Consequence Assessments at Nuclear Power Plants." For the CGS configuration, it is assumed that accidental releases are made at ground level. This assumption provides a conservative estimate of downwind χ/Q values. NRC code PAVAN (Reference 2.3-25) is used to produce dispersion estimates with the desert sigma option enabled.

Based on the guidance given in Regulatory Guide 1.145 the χ/Q values are calculated using three separate equations. The particular equation which is used depends upon the existing meteorological conditions. The equations are:

(1) $$\chi / Q = \frac{1}{U_{10}(\pi\sigma y\sigma z + A/2)}$$

(2) $$\chi / Q = \frac{1}{U_{10}(3\pi\sigma y\sigma z)}$$

(3) $$\chi / Q = \frac{1}{U_{10}\pi\Sigma y\sigma z}$$

Where χ/Q is relative concentration (sec/m^3)

π is 3.14159

U_{10} is the wind speed at the 10 meter level (m/sec)

σy is the horizontal desert diffusion parameter (m) determined from downwind distance and stability category.

σz is the vertical desert diffusion parameter (m) determined from downwind distance and stability category.

ΣY represents plume meander and building wake effects (m) and is a function of stability category, wind speed, and downwind distance.

A is the smallest vertical plane cross-sectional area of the reactor building (m^2).

During neutral or stable atmospheric stability conditions, the results of all three equations are used to determine dosages. The values from Equations (1) and (2) are compared and the larger is selected. This value is compared with that computed in Equation 3 and the lower value is selected as the appropriate χ/Q value.

During all other meteorological conditions (unstable and/or wind speeds of 6 m/sec or more), only equations (1) and (2) are considered. The appropriate χ/Q value is the larger of the two.

Values of σY and σz, the horizontal and vertical diffusion parameters are taken from Regulatory Guide 1.145 for the applicable stability category and downwind distance. For extremely stable condition (Category G), the following equations are applied:

$$\sigma Y(G) = 2/3\ \sigma Y(F)$$

$$\sigma z(G) = 3/5\ \sigma z(F)$$

2.3.5 LONG-TERM (ROUTINE) DIFFUSION ESTIMATES

2.3.5.1 Objectives

The joint wind direction and wind speed by atmospheric stability class data presented in Subsection 2.3.3 was used to assess annual average normalized concentrations, X/Q, for 16 radial sectors extending from the site boundary to a distance of 50 miles from the source. Tables 2.3-38 provides X/Q and D/Q concentrations for a mix mode release assuming desert

sigmas no decay, no plume depletion, recirculation, and a building wake (building height - 70.4 m). D/Q is normalized deposition.

2.3.5.2 Calculations

The calculational techniques used are consistent with the guidance provided in Regulatory Guide 1.111 "Methods for Estimating Atmospheric Transport and Dispersions of Gaseous Effluents in Routine Releases from Light-Water-Cooled Reactors". The joint frequency data presented in Subsection 2.3.3 were used in conjunction with the following equation to obtain X/Q values at appropriate downwind distance in each of the 16 sectors.

$$\frac{X(x,\kappa)}{Q} = \frac{2.032\Sigma_{ij} f_{ij\kappa} \exp\left[-h_e^2 / 2\sigma_{zj}^2(x)\right] R_{fx}(x)}{x\overline{u}_i(x)\left[\sigma_{zj}^2(x) + \frac{0.5D^2}{\pi}\right]^{1/2}}$$

Where:

$\frac{X(x,\kappa)}{Q}$ = *average effluent concentration in Ci/m³ normalized by source release rate (Ci/sec) at distance x and direction k.*

x = *downwind distance from release point.*

$\overline{u_i}$ = *midpoint value of ith wind speed class.*

h_e = *effective plume height.*

$\sigma_{zj}(x)$ = *vertical standard desert deviation of effluent spread at distance x for the jth stability class.*

R_{fx} = *factor to account for air recirculation and stagnation.*

f_{ijk} = *joint probability of the ith wind speed class, jth stability, class, and kth wind direction.*

π = *3.1416*

D = *maximum building height of adjacent buildings (D = 70.4 m)*

The building wake correction Equation 1 must not reduce the X/Q estimate by more than a factor of 3 or

$$\left(\sigma^2 xj\ (x) \quad + \frac{0.5D^2}{\pi}\right) \quad 1/2 \quad \leq \quad \left(3\sigma^2 zj(x)\right)\ 1/2$$

Equation 1 assumes a long-term continuous release whose effluent is distributed evenly across a 22.5° sector. The release was assumed to be ground level (i.e., he = 0 in Equation 1). Computer code X0QD0Q, with the Desert sigma option enabled described in NUREG-0324, was used to make two sets of calculations.

The nearest residences where maximum individual doses with single sector contributions occur at distances of 4.0 miles ENE (Ringold) and 4.2 miles ESE (Taylor Flats) of CGS. The annual average χ/Q values for these locations are calculated in Table 2.3-38c, 38f and 39c, 39f. The Columbia bluffs rise to an elevation of 878 ft just south of Taylor Flat. If it is considered that the low level sigma Z is less than 100 m out to 6 km for the P-G stability classes D-G, which are prevalent most of the winters and that low-level winds deflect either north or south near the bluffs (Reference 2.3-2), it is estimated that the total doses for these locations may be once again as large due to contributions of favorably oriented wind sectors.

The total dose in the channeling area of the Columbia River should include contributions from four other sectors with deflected winds and other channeling effects. The individual doses in that location could be twice as large as for the single sector, constant wind computations. The drift from the cooling towers should remove some of the effluent and deposit it on the site with the salts and counteract the bluff effect. The mechanical draft cooling towers should entrain part of the effluent, lift it with the plume and thus also make the χ/Q values over-predictive. Reasons for these differences were given in Subsection 2.3.2.1.

The results reported by Start and Wendell ("Regional Effluent Dispersion Calculation Considering spatial and Temporal Meteorological Variation," Preprint volume, Symposium on Atmospheric Diffusion and Air Pollution of the American Meteorological Society, September 9-13, 1974) indicate an average value at these distances of about 0.65 and a minimum single point value of about 1.75. If these factors are multiplied by the fraction of plume remaining at the distances in question, about 0.75, to account for the conservatism of the nondepleting model used to arrive at the dose estimates provided in 5.2 of the CGS Environmental Report, it is found that the most critical dose of 9.2 mrem to a child's thyroid (at Taylor Flat) is still within the 10 CFR Part 50 Appendix I design objective limit of 15 mrem. For example, 1.75 x 0.75 x 9.2 = 12.1 mrem. This value would still be conservative because the above recirculation factors do not account for the existence of a bluff line immediately downwind of Taylor Flat which will under the more stable conditions turn the plume before it reaches Taylor Flat. This effect would further reduce the effective recirculation factor.

At the nearest point of the nearest population center, about 9 miles, the average recirculation factor value from Start and Wendell, 1974, appears to be about 0.3 with the maximum single point value about 0.8. In addition to this effect, the effect of topographic channeling has been evaluated by conservatively hypothesizing that under stable conditions that winds blowing anywhere from the east to west (through north) sector might end up in the four sectors containing the majority of the population, SE through WSW (Pasco through Benton City). Including the effects due to channeling results in an estimated maximum factor of approximately 1.6. Applying the factors for recirculation and fraction of plume remaining after deposition results in a maximum effective factor of (1.6 x 0.8 x 0.67 = 0.86) less than one.

It therefore appears reasonable to conclude that the methodology employed to estimate doses is sufficiently conservative for the subject site to ensure that the doses to individuals and the general population have not been substantially underestimated due to the inherent assumptions.

2.3.6 REFERENCES

2.3-1 Baker, D. A., Diffusion Climatology on the 100-N Area, Hanford Washington, Douglas United Nuclear Company, DUN-7841, Richland, Washington, January 1972.

2.3-2 Stone, W. A., et al. Climatography of the Hanford Area, Battelle Pacific Northwest Laboratories, BNWL-1605, Richland, Washington, June 1972.

2.3-3 Stone, W. A. Meteorological Instrumentation of the Hanford Area, General Electric, Hanford Atomic Products Operation, HW-62455, Richland, Washington, March 1964.

2.3-4 Phillips, E., Tri-City Area, Kennewick-Pasco-Richland, Washington Narrative Climatological Summary, Climatography of the United States No. 20-45, U.S. Department of Commerce and Economic Development.

2.3-5 Federal Meteorological Handbook No. 1, Surface Observations, U.S. Government Printing Office, January 1970.

2.3-6 Fujita, T., Estimate of Maximum Wind Speed of Tornadoes in Three Northwestern States, SMRP Research Paper No. 92, University of Chicago, December 1970.

2.3-7 Jaech, J. L., Statistical Analysis of Tornado Data for the Three Northwestern States, Jersey Nuclear Company, Richland, Washington, December 1970.

2.3-8 Daubek, H. G., Tornado History and a Discussion of the Tornado Warning System, Battelle Memorial Institute, Pacific Northwest Laboratories Report to Jersey Nuclear Company, Richland, Washington, December 1970.

2.3-9 Thom, H. C. S., "New Distribution of Extreme Winds in the United States," Journal for the Structural Division, ASCE, ST-7, July 1968, pp 1787-1801.

2.3-10 ASCE Task Committee Report, Wind Forces on Structures, Paper No. 3269, Vol. 126, 1961.

2.3-11 Larson, L. B., Air Pollution Potential Over Southeastern Washington, U.S. Weather Bureau, Walla Walla, Washington, May 1970 (unpublished Presentation).

2.3-12 Holzworth, G. C., "Estimates of Mean Maximum Depths in the Contiguous United States," Monthly Weather Review, Vol. 92, pp 235-242, May 1964.

2.3-13 Hosler, C. R., "Low-Level Inversion Frequency in the Contiguous United States," Monthly Weather Review, Vol. 89, pp 319-339, September 1961.

2.3-14 Huschke, R. E., ed., Glossary of Terms Frequently Used in Air Pollution, American Meteorological Society, Boston, Massachusetts, January 1968.

2.3-15 Jenne, D. E., Frequency Analysis of Some Climatological Extremes at Hanford, General Electric, Hanford Atomic Products Operation, Richland, Washington, April 1963.

2.3-16 Hilst, G. R., and Nickola, P. W., "On Wind Erosion of Small Particles," Bulletin of the American Meteorological Society, Vol. 40, pp 73-77, February 1959.

2.3-17 Sehmel, G. A., and Lloyd, F. D., Airborne Dust Concentrations, Pacific Northwest Laboratories Annual Report for 1971 to the USAEC Division of Biology and Medicine, Vol. II, Part 1, Atmospheric Sciences, Battelle Pacific Northwest Laboratories, BNWL-1651, Richland, Washington, December 1972.

2.3-18 Bramson, P. E., and Corley, J. P. Environmental Surveillance at Hanford for CY-1971, Battelle Northwest Laboratories, BNWL-1683, Richland, Washington, August 1972.

2.3-19 ANSI A58, 1-1972, "Building Code Requirements for Minimum Design Loads in Buildings and Other Structures," American National Standards Institute, 1972.

2.3-20 Simpson, C. L., Computer Printouts of Meteorological Data from the HMS and Hanford No. 2 Sites, March 1-August 31, 1972, BNWL, September 1972.

2.3-21 PSAR WPPSS Nuclear Project No. 1, August 1974 (Docket No. 50-460).

2.3-22 Droppo, J. G. et al., Atmospheric Effects of Circular Mechanical Draft Cooling Towers at Washington Public Power Supply System Nuclear Power Plant Number Two, Final Report to Burns and Roe, Inc., November 1976.

2.3-23 Quality Assurance Program for the Acquisition, Processing, and Analysis of Meteorological Data for Washington Public Power Supply System Nuclear Project No. 2, Battelle Pacific Northwest Laboratories, Richland, Washington, April 1974.

2.3-24 Regulatory Guide 1.70, Rev. 3, Standard Format and Content of Safety Analysis Reports For Nuclear Power Plants, November 1978.

2.3-25 T. J. Bander, "PAVAN: An Atmospheric Dispersion Program for Evaluating Design Basis Accidental Releases of Radioactive Materials from Nuclear Power Stations," NUREG/CR-2858 (November 1982).

2.3-26 U.S. Nuclear Regulatory Commission, 1979: Regulatory Guide 1.145, "Atmospheric Dispersion Models for Potential Accident Consequence Assessments at Nuclear Power Plants," USNRC Office of Standards Development, Wash., D.C.

2.3-27 Gifford, F. A., 1975: Atmospheric Dispersion Models for Environmental Pollution Applications. Lectures on Air Pollution and Environmental Impact Analyses, American Meteorological Society, pp. 35-38.

2.3-28 PSAR WPPSS Nuclear Project No. 2, February 1973.

2.3-29 Fix, J. J., Environmental Surveillance at Hanford for CY-1974, Battelle Northwest Laboratories, BNWL-1910, Richland, Washington, April 1975.

2.3-30 Orgill, M. M., G. A. Sehmel, and T. J. Bander, 1974: "Regional Wind Resuspension of Dust," Pacific Northwest Laboratory Annual Report for 1973, to the USAEC Division of Biomedical and Environmental Research, Part 3, Atmospheric Sciences, BNWL-1850, pp. 214-219.

2.3-31 Hagen, L. J. and N. P. Woodruff, 1973: "Air Pollution from Duststorms in the Great Plains," Atmos. Environ., 7, pp. 323-332.

2.3-32 Sehmel, G. A., 1976: "The Influence of Soil Insertion on Atmospheric Particle Size Distributions," Pacific Northwest Laboratory Annual Report to ERDA Division of Biomedical and Environmental Research, Part 3, Atmospheric Sciences, BNWL-200, pp. 99-101.

2.3-33 A. Brandstetter of BNL to J. J. Verderber of Burns and Roe Inc., entitled "Hanford Duststorm Climatology Environmental Studies for CGS," and dated December 2, 1977.

2.3-34 U.S. Atomic Energy Commission, 1972: Regulatory Guide 1.23, Onsite Meteorological Programs.

2.3-35 Briggs, G. A., 1973: "Diffusion Estimation for Small Emissions in Environmental Research Laboratory," Air Resources Atmos. Turbc. and Diffusion Lab. 1973 Annual Report, ATDL-106, USDOC-NOAA.

2.3-36 NUREG-6331, "Atmospheric Relative Concentrations in Building Wakes," Revision 1, May 1997, ARCON96 RSICC Computer Code Collection November CCC-664.

2.3-37 Calculation NE-02-03-14, "Control Room χ/Q Using ARCON96 with 1996-1999 Meteorological Data."

2.3-38 Calculation NE-02-03-16, "Calculation of the EAB and LPZ χ/Q Using PAVAN with 1996-1999 Meteorological Data."

Table 2.3-1

Averages and Extremes of Climatic Elements at Hanford
(Based on all Available Records to and Including the Year 1980)

	TEMPERATURE (°F)															DEGREE DAYS (BASE 65°F)										PRECIPITATION (INCHES)													
	1912-1980 AVERAGES							1912-1980 EXTREMES								DEGREE DAYS (BASE 65°F)										1912-1980 TOTALS													
								DAILY MAXIMUM				DAILY MINIMUM				HEATING 1945-1980 TOTALS					COOLING 1960-1980 TOTALS										SNOW, ICE PELLETS (SLEET)						
	DAILY MAXIMUM	DAILY MINIMUM	MONTHLY	HIGHEST MONTHLY	YEAR	LOWEST MONTHLY	YEAR	RECORD HIGHEST	YEAR	RECORD LOWEST	YEAR	RECORD HIGHEST	YEAR	RECORD LOWEST	YEAR	MEAN MONTHLY	MAXIMUM MONTHLY	YEAR	MINIMUM MONTHLY	YEAR	MEAN MONTHLY	MAXIMUM MONTHLY	YEAR	MINIMUM MONTHLY	YEAR	MEAN MONTHLY	MAXIMUM MONTHLY	YEAR	MINIMUM MONTHLY	YEAR	MAX. IN 24 HOURS	YEAR	MEAN MONTHLY	MAXIMUM MONTHLY	YEAR	MAX. IN 24 HOURS	YEAR	MAXIMUM DEPTH	YEAR
Jan	36.6	21.9	29.3	42.5	1953	12.1	1950	72	1971	-2	1950	53	1971	-23	1934	1104	1640	1950	694	1953	0	0	------	0	------	0.92	2.47	1970	0.08	1977	1.08	1948	5.3	23.4	1950	7.1	1954	12.0	1969
Feb	45.4	27.3	36.3	44.5	1958	21.4	1929	71	1924	-3	1950	55	1932	-23	1950	781	1147	1956	576	1958	0	0	------	0	------	0.60	3.08	1940	T	1967	1.24	1916	2.3	26.0	1916	18.0	1916	24.5	1916
Mar	56.5	33.7	45.1	49.8	1926	39.4	1955	83	1960	24	1960	54	1942	6	1955	638	794	1955	476	1947	0	0	------	0	------	0.37	1.86	1957	0	1942+	0.59	1949	0.3	4.2	1951	2.2	1957	2.3	1957
Apr	66.2	40.0	53.1	59.6	1934	47.5	1955	95	1934	41	1945	60	1956	12	1935	381	522	1955	253	1977	2	24	1977	0	1978+	0.39	1.22	1969	0	1933+	0.58	1980	T	T	1968+	T	1968+	0	------
May	75.5	47.8	61.7	68.8	1947	56.6	1933	103	1936+	49	1918	70	1956	23	1954	156	258	1977	36	1947	43	94	1971	3	1962	0.48	2.03	1972	0	1931	1.39	1972	T	T	1960	T	1960	0	------
June	83.2	55.3	69.3	75.4	1922	63.0	1953	110	1912	55	1966	81	1924	33	1933	35	90	1953	3	1938	183	310	1969	57	1980	0.54	2.92	1950	0	1919	1.50	1934	0	0	------	0	------	0	------
July	91.8	61.0	76.4	81.8	1960	72.4	1963	115	1939	59	1966	82	1925	39	1979	4	22	1955	0	1975*	384	518	1960	232	1963	0.15	0.81	1966	0	1939+	1.25	1942	0	0	------	0	------	0	------
Aug	89.3	59.2	74.3	81.5	1967	69.8	1964	113	1961	63	1920	81	1961+	40	1918	6	32	1960	0	1979*	323	508	1967	171	1964	0.24	1.36	1977	0	1955+	0.89	1977	0	0	------	0	------	0	------
Sept	79.6	50.8	65.2	71.7	1967	58.8	1926	102	1976+	52	1934	72	1955	25	1926	70	179	1972	10	1979*	102	216	1967	27	1970	0.31	1.34	1947	T	1976+	0.82	1947	0	0	------	0	------	0	------
Oct	65.4	40.6	53.0	59.0	1952	48.8	1930	90	1933	31	1935	60	1945+	6	1935	376	479	1946	200	1952	2	10	1971	0	1977+	0.56	2.72	1957	0	1917+	1.91	1957	T	1.5	1973	1.5	1973	1.5	1973
Nov	48.4	31.3	39.8	46.0	1954	31.3	1955	75	1975	14	1955	52	1959+	-1	1955	758	1008	1955	567	1954	0	0	------	0	------	0.85	3.05	1926	T	1976+	0.78	1966	1.4	12.7	1955	8.3	1978	9.1	1978
Dec	39.4	26.0	32.7	38.5	1957	18.5	1919	69	1980	-3	1919	56	1975	-27	1919	990	1224	1964	822	1957	0	0	------	0	------	0.89	2.53	1931	0.11	1976+	1.00	1958	3.9	19.1	1964	5.4	1965	12.1	1964
					July		Jan		July		Feb		July		Dec			Jan		Aug			July		Apr			Feb		Aug		Oct			Feb		Feb		Feb
Year	64.8	41.2	53.0	81.8	1960	12.1	1950	115	1939	-3	1950+	82	1925	-27	1919	5299	1640	1950	0	1979*	1039	518	1960	0	1978+	6.30	3.08	1940	0	1955+	1.91	1957	13.2	26.0	1916	18.0	1916	24.5	1916

	WIND (mph)									RELATIVE HUMIDITY (%)								SKY COVER (SCALE 0-10)					SOLAR RADIATION (LANGLEYS)*								
	1945-1980 AVERAGES						PEAK GUSTS			1946-1980 AVERAGES				1946-1980 EXTREMES				1946-1980 AVERAGES (SUNRISE TO SUNSET)					1953-1980 AVERAGES DAILY TOTALS					1953-1980 EXTREME DAILY TOTALS				
	PREVAILING DIRECTION	MEAN MONTHLY SPEEDS	HIGHEST MONTHLY	YEAR	LOWEST MONTHLY	YEAR	SPEED	DIRECTION	YEAR	MEAN	HIGHEST MONTHLY	YEAR	LOWEST MONTHLY	YEAR	HIGHEST	YEAR	LOWEST	YEAR	MONTHLY	HIGHEST MONTHLY	YEAR	LOWEST MONTHLY	YEAR	MONTHLY	HIGHEST MONTHLY	YEAR	LOWEST MONTHLY	YEAR	HIGHEST MONTHLY	YEAR	LOWEST MONTHLY	YEAR
Jan	NW	6.4	10.3	1972	3.1	1955	80	SW	1972	76.4	88.8	1960	60.0	1963	100	1980*	13	1963	7.9	9.2	1978	4.3	1949	116	136	1973	78	1978	277	1969	16	1976+
Feb	NW	7.1	10.8	1976	4.6	1963	65	SW	1971	70.7	86.9	1963	54.0	1967	100	1980*	14	1962	7.6	9.3	1980	5.9	1964	194	238	1970	128	1980	422	1958	21	1976
Mar	WNW	8.5	10.7	1977*	5.9	1958	70	SW	1956	55.9	65.9	1950	44.0	1965	100	1979*	12	1965*	6.8	8.5	1978	4.9	1965	335	388	1965	293	1978	542	1968	44	1979
Apr	WNW	9.0	11.1	1972*	7.4	1958	73	SSW	1972	46.9	64.5	1963	36.9	1966	100	1978*	9	1954	6.4	8.1	1963	3.7	1951	469	535	1973	374	1963	704	1972	75	1974
May	WNW	8.9	10.5	1965*	5.8	1957	71	SSW	1948	43.0	61.9	1948	31.2	1966	100	1978*	7	1953	5.9	7.7	1977+	4.5	1945	569	634	1970	472	1980	838	1977	67	1962
June	WNW	9.2	10.7	1949	7.7	1950*	72	SW	1957	39.7	53.5	1950	30.0	1949	100	1977*	10	1964*	5.3	7.0	1950	2.8	1961	627	698	1960	537	1980	821	1971	112	1965
July	WNW	8.7	9.6	1963	6.8	1955	69	WSW	1979	32.2	40.5	1955	21.9	1959	99	1972	6	1951	2.9	4.7	1976	0.9	1953	650	714	1973	588	1955	808	1974	118	1972
Aug	WNW	8.0	9.1	1946	6.0	1956	66	SW	1961	35.6	47.8	1976	24.5	1967	100	1972*	7	1951	3.4	5.9	1968	0.6	1955	548	613	1955	475	1968	721	1957	107	1959
Sept	WNW	7.5	9.2	1961	5.4	1957	65	SSW	1953	41.6	55.5	1977	33.2	1974	100	1978*	10	1962*	4.1	6.7	1978	1.4	1975	415	463	1975	326	1977	591	1970	61	1957
Oct	WNW	6.6	9.1	1946	4.4	1952	63	SSW	1950	56.8	74.2	1962	42.5	1952	100	1980*	10	1952*	5.8	8.0	1975	3.9	1952	262	303	1976	216	1975	434	1973	33	1974
Nov	NW	6.1	8.2	1977	2.9	1956	64	SSW	1949	73.6	88.7	1979	62.8	1976	100	1980*	16	1976*	7.7	9.1	1972	6.2	1957	130	180	1957	97	1979*	295	1971	14	1969
Dec	NW	6.1	8.3	1968	3.9	1963*	71	SW	1955	80.0	90.5	1950	69.0	1968	100	1980*	26	1972	8.1	9.2	1962	6.4	1978	89	116	1970	57	1980*	196	1972	9	1973
				Apr		Nov			Jan			Dec		July		Dec		July			Feb		Aug			July		Dec		May		Dec
Year	WNW	7.7	11.1	1972*	2.9	1956	80	SW	1972	54.3	90.5	1950	21.9	1959	100	1980*	6	1951	6.0	9.3	1980	0.6	1955	367	714	1973	57	1980*	838	1977	9	1973

* CALORIES/cm²
+ALSO ON EARLIER YEARS

EXTREME AVERAGES OR TOTALS
AND YEAR OR SEASON OF OCCURRENCE

1912-1980 TEMPERATURE AVERAGES (°F)

HIGHEST ANNUAL	56.2	(1958+)
LOWEST ANNUAL	50.2	(1929)
HIGHEST WINTER (D-J-F)	41.1	(1933-34)
LOWEST WINTER	24.2	(1948-49)
HIGHEST SPRING (M-A-M)	58.2	(1947)
LOWEST SPRING	48.0	(1955)
HIGHEST SUMMER (J-J-A)	78.2	(1958)
LOWEST SUMMER	70.2	(1980)
HIGHEST FALL (S-O-N)	56.6	(1963)
LOWEST FALL	49.5	(1978)

1912-1980 PRECIPITATION TOTALS (IN.)

GREATEST ANNUAL	11.45	(1950)
LEAST ANNUAL	2.99	(1976)
SNOW, ICE PELLETS (SLEET)		
GREATEST SEASONAL	43.6	(1915-16)
LEAST SEASONAL	0.3	(1957-58)

1945-1980 WIND SPEED AVERAGE (MPH)

HIGHEST ANNUAL	8.3	(1968+)
LOWEST ANNUAL	6.3	(1957)

1945-1980 RELATIVE HUMIDITY AVERAGE (%)

HIGHEST ANNUAL	58.9	(1978)
LOWEST ANNUAL	49.4	(1967)

1945-1980 SKY COVER AVERAGES
(SUNRISE TO SUNSET, SCALE 0-10)

HIGHEST ANNUAL	6.6	(1978+)
LEAST ANNUAL	5.1	(1949)

1953-1980 SOLAR RADIATION
AVERAGE DAILY TOTAL (LANGLEYS)

HIGHEST ANNUAL	390	(1973)
LOWEST ANNUAL	324	(1980)

Table 2.3-1

Averages and Extremes of Climatic Elements at Hanford
(Based on all Available Records to and Including the Year 1980) (Continued)

	NUMBER OF DAYS (1954-1980)											NUMBER OF DAYS (1945–1980) *																				
	CLEAR					PTLY CLDY	CLOUDY					THUNDERSTORMS					HEAVY FOG (VIS. 1/4 MI. OR LESS)					PRECIPITATION 0.10 INCH OR MORE					SNOW 1.0 INCH OR MORE				
	MEAN MONTHLY	GREATEST MONTHLY	YEAR	LEAST MONTHLY	YEAR	MEAN	MEAN MONTHLY	GREATEST MONTHLY	YEAR	LEAST MONTHLY	YEAR	MEAN MONTHLY	GREATEST MONTHLY	YEAR	LEAST MONTHLY	YEAR	MONTHLY MEAN	GREATEST MONTHLY	YEAR	LEAST MONTHLY	YEAR	MEAN MONTHLY	GREATEST MONTHLY	YEAR	LEAST MONTHLY	YEAR	MEAN MONTHLY	GREATEST MONTHLY	YEAR	LEAST MONTHLY	YEAR
Jan	3	7	1963	0	1955+	5	22	28	1978	17	1963	0	0	-----	0	-----	6	15	1976	0	1949	3	8	1970	0	1977+	2	10	1950	0	1977+
Feb	4	9	1968+	0	1980+	5	19	26	1980+	12	1964	#	1	1972+	0	1980+	3	11	1963	0	1977	2	5	1980+	0	1979+	1	4	1975+	0	1979+
Mar	6	12	1979+	1	1978+	8	17	23	1977	9	1979+	#	1	1969+	0	1980+	1	5	1951	0	1980+	2	8	1957	0	1980+	#	2	1957+	0	1980+
Apr	6	12	1962	1	1963	9	15	21	1979+	6	1956	1	3	1979+	0	1977+	#	1	1975+	0	1980+	1	5	1948	0	1977+	0	0	-----	0	-----
May	8	14	1973	1	1977	11	12	19	1977+	6	1958	2	7	1956	0	1977+	#	1	1958	0	1980+	2	4	1980+	0	1979+	0	0	-----	0	-----
June	10	21	1961	5	1972+	10	10	15	1980+	5	1979+	2	8	1972+	0	1963+	#	1	1971	0	1980+	2	8	1950	0	1979+	0	0	-----	0	-----
July	19	26	1960	13	1976+	7	5	12	1976	0	1967	2	7	1975	0	1973+	0	0	-----	0	-----	1	3	1974+	0	1980+	0	0	-----	0	-----
Aug	18	30	1955	9	1978	7	6	13	1968	0	1969+	2	8	1953	0	1974+	#	1	1959	0	1980+	1	4	1976+	0	1980+	0	0	-----	0	-----
Sept	15	27	1975	6	1978	7	8	16	1977	1	1975	1	4	1959	0	1976+	#	1	1977	0	1980+	1	5	1977+	0	1978+	0	0	-----	0	-----
Oct	10	14	1980+	1	1975	7	14	22	1973	9	1970	#	2	1976	0	1980+	1	7	1980	0	1978+	2	8	1950	0	1978+	1	1	1973	0	1980+
Nov	4	10	1957	1	1973+	5	21	25	1973+	15	1961	0	0	-----	0	-----	6	13	1965	0	1960	3	10	1973	0	1976+	1	6	1955	0	1980+
Dec	3	9	1978	1	1980+	5	23	28	1962	17	1978	#	1	1971	0	1980+	8	17	1950	2	1968+	3	9	1964	0	1976+	2	6	1964	0	1976+
			Aug		Feb				Jan		Aug			June					Dec					Nov		Aug			Jan		
Year	106	30	1955	0	1980+	86	172	28	1978+	0	1969+	10	8	1972+	0	-----	25	17	1950	0	-----	23	10	1973	0	1980+	6	10	1950	0	-----

	NUMBER OF DAYS (1945-1980)										NUMBER OF DAYS (1912 – 1980)																					
	3" OR MORE SNOW ON GND.					PEAK GUST 40 MPH OR GREATER					MAX. TEMP 90 OR ABOVE					MAX. TEMP 100 OR ABOVE					MAX. TEMP. 32 OR BELOW					MIN. TEMP. 32 OR BELOW					MIN. TEMP 0 OR BELOW				
	MEAN MONTHLY	GREATEST MONTHLY	YEAR	LEAST MONTHLY	YEAR	MEAN MONTHLY	GREATEST MONTHLY	YEAR	LEAST MONTHLY	YEAR	MEAN MONTHLY	GREATEST MONTHLY	YEAR	LEAST MONTHLY	YEAR	MEAN MONTHLY	GREATEST MONTHLY	YEAR	LEAST MONTHLY	YEAR	MEAN MONTHLY	GREATEST MONTLY	YEAR	LEAST MONTHLY	YEAR	MEAN MONTHLY	GREATEST MONTHLY	YEAR	LEAST MONTHLYY	YEAR	MEAN MONTHLY	GREATEST MONTHLY	YEAR	LEAST MONTHLYY	YEAR
Jan	5	23	1969	0	1977+	3	11	1972	0	1979+	0	0	------	0	------	0	0	------	0	------	11	30	1979	0	1967+	27	31	1980+	9	1953	2	14	1950	0	1977+
Feb	3	16	1950	0	1978+	2	10	1976	0	1978+	0	0	------	0	------	0	0	------	0	------	3	15	1956	0	1976+	21	28	1944+	5	1958	1	9	1929	0	1980+
Mar	0	0	------	0	------	3	9	1956	0	1978	0	0	------	0	------	0	0	------	0	------	#	2	1960	0	1980+	15	25	1944+	6	1968+	0	0	------	0	------
Apr	0	0	------	0	------	3	7	1972	0	1979+	#	4	1926	0	1980+	0	0	------	0	------	0	0	------	0	------	5	15	1935	0	1974+	0	0	------	0	------
May	0	0	------	0	------	2	6	1971+	0	1977	3	11	1924	0	1980+	#	1	1966+	0	1980+	0	0	------	0	------	#	3	1938	0	1980+	0	0	------	0	------
June	0	0	------	0	------	2	6	1973	0	1980+	9	20	1940+	0	1980+	2	9	1970	0	1980+	0	0	------	0	------	0	0	------	0	------	0	0	------	0	------
July	0	0	------	0	------	1	4	1979+	0	1977+	20	29	1941	8	1963	7	16	1971+	0	1963+	0	0	------	0	------	0	0	------	0	------	0	0	------	0	------
Aug	0	0	------	0	------	1	5	1951	0	1980+	18	29	1915	7	1948	4	16	1942	0	1980+	0	0	------	0	------	0	0	------	0	------	0	0	------	0	------
Sept	0	0	------	0	------	1	4	1946	0	1980+	5	16	1938	0	1977+	#	2	1955+	0	1980+	0	0	------	0	------	#	4	1933+	0	1980+	0	0	------	0	------
Oct	0	0	------	0	------	2	8	1967	0	1979+	#	1	1933	0	1980+	0	0	------	0	------	#	2	1935	0	1980+	5	12	1916	0	1962+	0	0	------	0	------
Nov	1	12	1978	0	1980+	2	5	1973+	0	1979+	0	0	------	0	------	0	0	------	0	------	2	15	1955	0	1976+	17	30	1936	4	1949	#	1	1955+	0	1980+
Dec	2	14	1955	0	1980+	3	8	1957+	0	1969+	0	0	------	0	------	0	0	------	0	------	8	19	1914	0	1974+	25	31	1978+	14	1933	1	14	1919	0	1980+
			Jan					Jan					July					July					Jan					Jan					Jan		
Year	11	23	1969	0	------	25	11	1972	0	------	55	29	1941	0	------	13	16	1971+	0	------	24	30	1979	0	------	115	31	1980+	0	------	4	14	1950+	0	------

NUMBER OF DAYS

CLEAR (0-3 TENTHS SKY COVER, SR TO SS)
- GREATEST ANNUAL (1954-80) 121 1960
- LEAST ANNUAL (1954-80) 80 1977

CLOUDY (9-10 TENTHS SKY COVER, SR TO SS)
- GREATEST ANNUAL (1954-80) 193 1978
- LEAST ANNUAL (1954-80) 85 1966

THUNDERSTORMS
- GREATEST ANNUAL (1945-80) 23 1948
- LEAST ANNUAL (1945-80) 3 1949

HEAVY FOG (VIS. 1/4 MILE OR LESS)
- GREATEST SEASONAL (1945-80) 42 1950-51
- LEAST SEASONAL (1945-80) 9 1948-49

PRECIPITATION 0.10 INCH OR MORE
- GREATEST ANNUAL (1946-80) 39 1950
- LEAST ANNUAL (1946-80) 10 1965

SNOW 1.0 INCH OR MORE
- GREATEST SEASONAL (1946-80) 15 1955-56
- LEAST SEASONAL (1946-80) 0 1976-77

3 IN. OR MORE SNOW ON GROUND
- GREASTEST SEASONAL (1946-80) 40 1978-79+
- LEAST SEASONAL (1946-80) 0 1976-77

PEAK GUST 40 MPH OR GREATER
- GREATEST ANNUAL (1945-80) 41 1961
- LEAST ANNUAL (1945-80) 10 1978

MAX. TEMPERATURE 90 OR ABOVE
- GREATEST ANNUAL (1912-80) 85 1940+
- LEAST ANNUAL (1912-80) 29 1980

MAX. TEMPERATURE 100 OR ABOVE
- GREATEST ANNUAL (1912-80) 32 1942
- LEAST ANNUAL (1912-80) 1 1954

MAX. TEMPERATURE 32 OR BELOW
- GREATEST SEASONAL (1912-80) 53 1955-56
- LEAST SEASONAL (1912-80) 1 1937-38

MIN. TEMPERATURE 32 OR BELOW
- GREATEST SEASONAL (1912-80) 141 1916-17
- LEAST SEASONAL (1912-80) 75 1957-58

MIN. TEMPERATURE 0 OR BELOW
- GREATEST SEASONAL (1912-80) 18 1949-50
- LEAST SEASONAL (1912-80) 0 1976-77

REFERENCE NOTES

* PRECIPITATION OBSERVATIONS NOT BEGUN UNTIL 1946

\# LESS THAN 1/2

\+ ALSO ON EARLIER YEARS

LOCATION AND HISTORY

PRESENT LOCATION 25 MILES NW OF RICHLAND, WASHINGTON

LATITUDE 46°34'N; LONGITUDE 119°36'W, ELEVATION 733 FEET

OBSERVATIONS FROM 1912 TO 1944 WERE BY UNITED STATES WEATHER BUREAU COOPERATIVE OBSERVERS AT A SITE ABOUT 10 MILES ENE OF PRESENT LOCATION. SINCE 1944, OBSERVATIONS HAVE BEEN MAINTAINED ON A 24 HOUR-A-DAY BASIS BY THREE DIFFERENT DOE CONTRACTORS.

Table 2.3-2

Average Return Period (R) and Existing Record (ER) for Various Precipitation Amounts and Intensity During Specified Time Periods at Hanford
(Based on Extreme Value Analysis of 1947-1969 Records)

	Amount (Inches)							Intensity (Inches per Hour)						
	Time Period							Time Period						
R (YEARS)	20 MIN	60 MIN	2 HRS	3 HRS	6 HRS	12 HRS	24 HRS	20 MIN	60 MIN	2 HRS	3 HRS	6 HRS	12 HRS	24 HRS
2	0.16	0.26	0.30	0.36	0.48	0.62	0.72	0.49	0.26	0.15	0.12	0.08	0.052	0.030
5	0.24	0.40	0.48	0.55	0.77	0.95	1.06	0.72	0.40	0.24	0.18	0.13	0.079	0.044
10	0.37	0.50	0.59	0.67	0.96	1.17	1.28	1.1	0.50	0.30	0.22	0.16	0.098	0.053
25	0.47	0.62	0.74	0.83	1.21	1.45	1.56	1.4	0.62	0.37	0.28	0.20	0.121	0.065
50	0.53	0.72	0.85	0.96	1.40	1.66	1.77	1.6	0.72	0.42	0.32	0.23	0.138	0.074
100	0.60	0.81	0.96	1.07	1.59	1.87	1.99	1.8	0.81	0.48	0.36	0.27	0.156	0.083
250	0.68	0.93	1.11	1.22	1.82	2.13	2.26	2.0	0.93	0.55	0.41	0.30	0.177	0.094
500	0.73	1.02	1.22	1.33	2.00	2.34	2.47	2.2	1.02	0.61	0.44	0.33	0.195	0.103
1000	0.80	1.11	1.33	1.45	2.20	2.55	2.68	2.4	1.11	0.67	0.48	0.37	0.212	0.112

* No records have been kept for time periods of less than 60 minutes. However, the rain gage chart for 6-12-69 shows that 0.55 inch occurred during a 20-minute period from 1835 to 1855 PST. An additional 0.01 inch occurred between 1855 and 1910 to account for the record 60-minute amount of 0.59 inch.

Table 2.3-3

Miscellaneous Snowfall Statistics
(1946 Through 1970)

	Oct	Nov	Dec	Jan	Feb	Mar	Season
Average number of days with depth at 0400 PST							
1" or more	0	1	5	10	5	#	21
3" or more	0	1	2	5	3	0	11
6" or more	0	0	1	3	1	0	5
12" or more	0	0	#	#	0	0	#
Record greatest number of days with depth at 0400 PST							
1" or more	0	(1955) 11	(1964+) 17	(1969) 31	(1950) 17	(1951) 3	(1955-56) 54
3" or more	0	(1955) 10	(1955) 14	(1969) 23	(1950) 16	0	(1949-50) 38
6" or more	0	0	(1964) 12	(1965) 23	(1969+) 8	0	(1949-50) 23
12" or more	0	0	(1964) 4	(1969) 1	0	0	(1964-65) 4
Record greatest depth	(1957) 0.3	(1946) 5.1	(1964) 12.1	(1969) 12.0	(1969) 10.0	(1957) 2.3	(Dec 1964) 12.1
Greatest in 24 hours	(1957) 0.3	(1955) 4.8	(1965) 5.4	(1954) 7.1	(1959) 5.2	(1957+) 2.2	(Jan. 1954) 7.1
Average % of water equivalent of all precipitation	2	14	46	48	29	14	26

( ) Denotes year of occurrence

\+ Denotes also in earlier years

\# Denotes less than 1/2 day

Table 2.3-4

Tornado History Within 100 Miles of CGS

Date	Location
June 26, 1916	Walla Walla, Washington
April 15, 1925	Condon, Oregon
September 2, 1936	Walla Walla, Washington
May 20, 1948	Yakima, Washington
May 29, 1948	Yakima, Washington
June 11, 1948	Ephrata, Washington
June 16, 1948	Hanford Reservation
May 9, 1956	Kennewick, Washington
April 12, 1957	Ione, Oregon
April 30, 1957	Yakima, Washington
May 6, 1957	Harrington, Washington
April 24, 1958	Walla Walla, Washington
June 26, 1958	Wallula Junction, Washington
March 14, 1966	Little Goose Dam, Washington

Note: No major damage or loss of life was associated with any of the tornadoes.

Table 2.3-5

Monthly and Annual Prevailing Directions, Average Speeds, and Peak Gusts: 1945-1970 at HMS
(50 ft level)

Month	Prev Den	Avg Speed	Highest Avg	Year	Lowest Avg	Year	Peak Gust Speed	Peak Gust Den	Peak Gust Year
Jan	NW	6.4	9.6*	1953	3.1	1955	65**	S	1967
Feb	NW	7.0	9.4	1961	4.6	1963	63	SW	1965
Mar	WNW	8.4	10.7	1964	5.9	1958	70	SW	1956
Apr	WNW	9.0	11.1	1959	7.4	1958	60	WSW	1969
May	WNW	8.8	10.5	1965+	5.8	1957	71	SSW	1943
June	WNW	9.2	10.7	1949	7.7	1950+	72	SW	1957
July	WNW	8.6	9.6	1963	6.8	1955	55	WSW	1963
Aug	WNW	8.0	9.1	1946	6.0	1956	66	SW	1961
Sept	WNW	7.5	9.2	1961	5.4	1957	65	SSW	1953
Oct	WNW	6.7	9.1	1946	4.4	1952	63	SSW	1950
Nov	NW	6.2	7.9	1945	2.9	1956	64	SSW	1949
Dec	NW	6.0	8.3	1968	3.9	1963+	71	SW	1955
Year	WNW	7.6	8.3	1968+	6.3	1957	72**	SW	June 1957

* The average speed for January, 1972, was 10.3 mph

** On January 11, 1972, a new all-time record peak gust of 80 mph was established

Table 2.3-6

Speed and Direction of Daily Peak Gusts*

Direction	Speed Class (mph) Under 10	10-19	20-29	30-39	40-49	50-59	60-69	70 or over	Total	Extreme High and Date of Occurrence ** mph	Date
NNE	0.2	0.8	1.3	0.2	0.1	0	0	0	2.6	47	Feb. 5, 1948
NE	0.3	1.0	1.0	0.2	0	0	0	0	2.5	38	July 10, 1951
ENE	0.2	0.6	0.3	0.1	0	0	0	0	1.2	37	May 27, 1947
E	0.2	0.7	0.2	0.1	#	0	0	0	1.2	44	June 11, 1950
ESE	0.1	0.4	0.1	0	0	0	0	0	0.6	26	June 2, 1958
SE	0.7	2.0	0.4	#	#	#	0	0	3.1	53	Aug. 29, 1947
SSE	0.7	1.8	0.5	0.1	0.1	#	0	0	3.2	52	Dec. 4, 1952
S	0.3	0.8	1.0	0.7	0.3	0.2	#	0	3.3	58	Dec. 23, 1957
SSW	0.1	0.9	1.5	1.4	0.8	0.4	0.1	#	5.2	71	May 26, 1948
SW	0.2	0.7	3.6	3.4	1.7	0.4	0.1	0.1	10.2	72	June 5, 1957
WSW	0.2	1.5	2.7	2.4	1.1	0.2	0	0	8.1	58	Nov. 3, 1958 L
W	0.3	2.2	2.1	1.0	0.3	#	0	0	5.9	52	Nov. 4, 1958 L
WNW	1.0	9.6	8.0	5.4	0.6	#	0	0	24.6	50	July 19, 1953
NW	1.5	9.6	6.8	5.1	0.8	0	0	0	23.8	49	April 6, 1952

Table 2.3-6

Speed and Direction of Daily Peak Gusts* (Continued)

Direction	Speed Class (mph) Under 10	10-19	20-29	30-39	40-49	50-59	60-69	70 or over	Total	Extreme High and Date of Occurrence ** mph	Date
NNW	0.4	0.8	0.3	#	0	0	0	0	1.5	38	May 8, 1955
N	0.2	1.1	1.4	0.2	0.1	0	0	0	3.0	46	Aug. 27, 1951
Summary	6.6	34.5	31.2	20.3	5.9	1.2	0.2	0.1	100.0	---	---

* Based on 12 years of observations (1947–58). Tabular values under speed classes denote percent of all daily observations made during the period.

L Denotes the latest of several occurrences.

\# Denotes less than .05%.

** A new record was set on January 11, 1972, when a peak gust of 80 mph was recorded at the 50 foot level at the Hanford Meteorology Station. Reference Document BNWL-1640 “The Hanford Wind Storm of January 11, 1972.” dated February 1972, issued by Battelle Pacific Northwest Laboratories.

Table 2.3-7a

CGS and HMS Hourly Meteorological Data, August 7-9, 1972
(Ultimate Heat Sink Studies)

Day/Hour	CGS Site					HMS Tower Site			
	Wind Direction (degrees)	Wind Speed (mph)	Dry Bulb (°F)	Relative Humidity (percent)	Wet Bulb (°F)	Wind Direction (degrees)	Wind Speed (mph)	Dry Bulb (°F)	Wet Bulb (°F)
Elevation	23 feet	23 feet	3 feet	3 feet	3 feet	50 feet	7 feet	7 feet	7 feet
7/1	30	5	76	35	60	220	6	78	57
7/2	50	5	72	36	58	270	6	76	56
7/3	160	5	71	44	59	300	5	78	57
7/4	80	5	69	48	58	270	5	74	54
7/5	50	5	65	51	55	180	4	72	55
7/6	70	4	61	64	54	110	2	67	53
7/7	100	5	61	64	54	300	1	76	57
7/8	70	4	59	68	53	320	5	81	60
7/9	70	4	67	66	59	320	3	85	61
7/10	100	5	77	54	65	Variable	1	92	64
7/11	130	5	85	46	69	40	3	93	64
7/12	140	5	91	38	71	Variable	3	98	66
7/13	360	6	96	35	73	90	5	102	68
7/14	80	8	99	32	74	110	5	104	68
7/15	110	8	102	30	76	90	4	105	69
7/16	110	9	106	28	77	Variable	4	107	69
7/17	90	9	107	25	77	90	8	108	69
7/18	60	9	108	24	77	90	8	106	68
7/19	50	12	106	23	75	110	7	103	67
7/20	50	12	106	23	75	90	8	97	64
7/21	40	8	103	22	73	130	7	90	62
7/22	60	6	96	22	69	220	6	84	60
7/23	100	5	89	26	66	300	8	82	58
7/24	30	4	85	34	66	270	5	81	58
8/1	360	6	79	36	63	270	4	78	57
8/2	130	5	72	39	58	270	4	77	57
8/3	40	5	70	42	58	200	4	78	57
8/4	20	7	71	46	59	240	1	71	53
8/5	40	6	71	46	59	200	4	70	53
8/6	80	5	67	46	56	300	5	69	53
8/7	100	5	65	52	55	320	5	79	60
8/8	140	4	62	54	53	20	3	85	63
8/9	130	5	67	56	57	140	2	87	63
8/10	130	5	77	53	64	110	3	91	65
8/11	120	7	85	46	69	110	4	93	65
8/12	70	7	90	40	71	60	4	97	67
8/13	70	6	95	37	73	90	4	103	69
8/14	40	6	98	34	74	90	4	104	69
8/15	60	7	101	32	76	130	4	106	70
8/16	70	7	104	30	77	110	6	108	70
8/17	30	8	106	28	77	220	10	108	70
8/18	30	8	108	27	78	270	16	106	68
8/19	90	8	106	26	77	300	20	102	70
8/20	110	8	106	25	76	300	21	96	66
8/21	320	19	108	26	78	300	21	91	66
8/22	320	21	100	26	73	300	22	90	63
8/23	320	15	95	28	71	300	16	87	64
8/24	320	15	91	28	68	270	16	85	63
9/1	320	17	90	32	69	270	9	83	63
9/2	320	10	89	32	68	240	6	82	61
9/3	180	7	84	34	65	300	7	78	60
9/4	Variable	5	77	35	61	240	6	80	62
9/5	150	6	72	46	60	270	11	82	63
9/6	140	5	70	54	59	240	10	82	63
9/7	160	5	71	57	61	240	8	82	63
9/8	200	7	68	58	59	220	6	87	65
9/9	190	7	73	60	63	240	10	89	65
9/10	200	8	81	56	68	320	9	94	65
9/11	180	6	89	50	72	320	6	96	66
9/12	170	5	94	44	74	220	5	99	67
9/13	190	7	98	38	76	220	10	101	68
9/14	200	10	100	34	76	220	15	101	67
9/15	160	8	100	30	74	220	15	101	67
9/16	300	13	102	30	76	240	13	103	68
9/17	250	13	104	28	76	300	16	102	68
9/18	300	17	104	26	75	300	20	97	67
9/19	310	14	104	27	76	300	20	93	65
9/20	320	20	102	26	74	300	17	88	63
9/21	320	22	96	27	71	300	16	83	61
9/22	320	17	93	29	70	300	18	80	60
9/23	320	13	87	30	66	300	19	79	60
9/24	320	16	84	30	64	300	14	78	60

Table 2.3-7b

CGS Hourly Meteorological Data, July 4-12, 1975 (33 ft Level)
(Ultimate Heat Sink Studies)

Day/Hour	Wind Speed mph	Dry Bulb °F	Dewpoint °F	Wet Bulb °F
4/1	3.56	66.13	53.17	58.41
4/2	3.66	64.91	54.85	58.86
4/3	1.71	64.16	53.92	58.07
4/4	4.88	62.69	53.41	57.22
4/5	2.96	61.87	53.57	56.99
4/6	2.76	65.60	55.20	59.30
4/7	5.21	72.51	55.95	62.22
4/8	3.33	77.12	54.84	63.26
4/9	6.02	81.71	55.52	65.16
4/10	5.97	83.95	57.71	67.00
4/11	12.36	90.00	55.57	67.88
4/12	9.67	94.48	57.09	69.99
4/13	9.55	97.15	57.97	71.21
4/14	8.89	99.57	58.00	71.93
4/15	6.28	102.37	56.77	72.17
4/16	5.85	103.49	54.77	71.63
4/17	6.13	104.27	52.40	70.88
4/18	3.55	104.77	51.20	70.56
4/19	3.41	103.68	49.57	69.61
4/20	5.64	95.64	59.28	71.39
4/21	3.88	91.49	57.55	69.30
4/22	3.61	86.72	56.56	67.32
4/23	3.97	83.92	58.68	67.50
4/24	4.81	79.60	57.84	65.66
5/1	4.96	76.83	57.17	64.37
5/2	3.90	74.83	55.47	62.79
5/3	3.30	71.68	55.41	61.64
5/4	6.61	70.93	54.56	60.92
5/5	6.06	71.15	55.57	61.54
5/6	5.00	72.99	55.89	62.36
5/7	5.28	77.84	57.41	64.84
5/8	2.94	81.95	58.51	66.78
5/9	4.87	87.01	57.89	68.07
5/10	8.24	92.11	56.24	68.85
5/11	5.82	96.69	54.80	69.61
5/12	5.69	98.96	57.68	71.60
5/13	6.13	100.80	60.27	73.36
5/14	4.74	103.79	54.99	71.81
5/15	7.52	105.36	54.77	72.18
5/16	6.43	105.81	55.09	72.44
5/17	4.65	104.53	53.25	71.31
5/18	6.93	103.48	52.80	70.80
5/19	6.48	101.04	57.15	71.97
5/20	6.79	96.64	57.79	70.97
5/21	5.25	93.63	57.23	69.80
5/22	6.05	89.23	56.43	68.05
5/23	3.95	87.41	57.25	67.88
5/24	6.34	83.80	58.84	67.55
6/1	2.68	81.71	59.17	67.05
6/2	6.15	79.55	59.15	66.33
6/3	4.87	76.13	59.73	65.54
6/4	6.08	73.41	59.47	64.49
6/5	5.55	72.83	59.39	64.24
6/6	2.14	74.56	61.28	65.91
6/7	2.35	80.99	63.33	69.16
6/8	4.21	85.01	61.95	69.61
6/9	2.96	86.61	63.65	71.04
6/10	5.10	89.49	61.49	70.70
6/11	13.07	86.75	62.85	70.63
6/12	12.58	83.84	63.47	70.10
6/13	6.00	87.87	60.85	69.87
6/14	4.56	88.69	61.47	70.45
6/15	5.09	91.49	60.59	70.83
6/16	6.27	94.56	59.57	71.21
6/17	9.89	92.59	60.03	70.87

Table 2.3-7c

CGS Hourly Meteorological Data, July 4-12, 1975 (33 ft Level)*
(Ultimate Heat Sink Studies)

Day/Hour	Wind Speed mph	Dry Bulb °F	Dewpoint °F	Wet Bulb °F
6/18	7.70	93.44	59.81	71.00
6/19	3.03	92.59	59.17	70.43
6/20	5.58	90.53	59.57	70.02
6/21	12.41	87.60	60.93	69.83
6/22	8.22	82.43	58.69	67.03
6/23	3.64	79.72	56.40	64.94
6/24	3.82	79.49	55.65	64.48
7/1	8.39	75.23	54.69	62.52
7/2	7.41	73.55	54.69	61.94
7/3	8.64	72.88	53.95	61.31
7/4	7.31	72.67	53.68	61.10
7/5	7.31	71.28	53.36	60.43
7/6	8.75	74.37	55.44	62.61
7/7	10.86	76.77	57.23	64.38
7/8	8.77	79.63	58.96	66.26
7/9	10.34	83.07	59.71	67.77
7/10	12.46	86.32	60.35	69.13
7/11	9.95	89.15	61.49	70.60
7/12	10.70	90.61	60.37	70.45
7/13	6.33	92.80	59.71	70.76
7/14	3.98	95.65	59.57	71.53
7/15	8.95	95.01	58.67	70.90
7/16	12.70	96.85	59.31	71.76
7/17	5.17	96.51	59.49	71.75
7/18	3.60	97.15	58.72	71.56
7/19	8.61	96.40	57.76	70.88
7/20	5.68	91.52	58.85	69.94
7/21	4.75	86.08	61.33	69.58
7/22	4.06	84.35	55.89	66.22
7/23	8.93	81.39	59.31	67.02
7/24	16.32	81.47	60.35	67.62
8/1	10.89	80.08	58.21	66.01
8/2	10.13	79.65	56.69	65.07
8/3	11.19	78.05	55.33	63.83
8/4	9.25	76.72	54.43	62.91
8/5	8.42	74.67	54.53	62.25
8/6	8.80	76.45	55.55	63.40
8/7	14.06	79.23	56.88	65.03
8/8	13.55	80.37	57.60	65.79
8/9	M	M	M	M
8/10	M	M	M	M
8/11	M	M	M	M
8/12	M	M	M	M
8/13	M	M	M	M
8/14	M	M	M	M
8/15	M	M	M	M
8/16	5.38	101.23	59.09	72.92
8/17	5.44	102.03	58.00	72.64
8/18	3.66	102.16	56.56	72.02
8/19	3.50	100.85	55.28	71.07
8/20	6.68	97.09	56.61	70.54
8/21	7.28	92.64	56.40	69.09
8/22	9.70	89.25	55.25	67.49
8/23	9.48	87.49	53.71	66.21
8/24	6.22	83.73	54.29	65.24

*M – Missing data

Table 2.3-7d

CGS Hourly Meteorological Data, July 4-12, 1975 (33 ft Level)*
(Ultimate Heat Sink Studies)

Day/Hour	Wind Speed mph	Dry Bulb °F	Dewpoint °F	Wet Bulb °F
9/1	7.99	81.52	55.81	65.25
9/2	5.26	79.12	56.45	64.76
9/3	3.95	74.91	58.32	64.35
9/4	4.58	73.12	58.69	63.94
9/5	3.78	72.37	57.92	63.25
9/6	4.00	75.28	59.49	65.12
9/7	4.67	79.79	60.16	66.98
9/8	9.88	83.38	60.06	68.06
9/9	12.03	85.49	60.00	68.69
9/10	10.18	88.13	61.28	70.18
9/11	8.76	92.13	62.85	72.20
9/12	5.78	95.52	64.40	74.02
9/13	7.10	99.49	63.17	74.46
9/14	4.77	102.61	62.72	75.01
9/15	5.17	106.40	58.77	74.23
9/16	5.12	108.03	55.28	73.15
9/17	3.24	109.47	55.49	73.65
9/18	6.10	109.15	53.07	72.58
9/19	6.18	107.44	52.35	71.79
9/20	7.80	101.47	57.87	72.42
9/21	13.30	99.31	53.15	69.69
9/22	25.82	94.16	61.36	72.01
9/23	17.04	94.61	59.49	71.19
9/24	11.05	92.37	57.57	69.58
10/1	8.36	90.91	58.03	69.35
10/2	12.16	85.92	59.17	68.39
10/3	9.19	84.24	57.28	66.88
10/4	5.08	80.61	56.21	65.14
10/5	1.56	80.24	58.48	66.21
10/6	6.53	78.27	59.55	66.15
10/7	7.10	83.25	62.99	69.65
10/8	4.15	86.77	62.91	70.67
10/9	3.89	90.64	61.09	70.83
10/10	5.12	92.64	62.00	71.90
10/11	3.77	95.23	63.36	73.38
10/12	5.74	98.32	62.40	73.73
10/13	5.89	100.91	59.41	72.98
10/14	5.27	103.09	59.39	73.58
10/15	5.30	105.20	58.91	73.96
10/16	5.90	105.71	56.00	72.80
10/17	9.37	104.93	54.11	71.78
10/18	12.21	102.48	55.88	71.81
10/19	8.55	101.15	56.05	71.50
10/20	5.54	98.27	56.13	70.68
10/21	4.26	96.21	56.59	70.27
10/22	3.14	90.72	60.53	70.57
10/23	7.36	91.33	57.68	69.31
10/24	12.76	91.49	60.48	70.77
11/1	7.86	89.61	61.65	70.83
11/2	12.03	86.81	62.03	70.20
11/3	14.22	88.56	61.48	70.42
11/4	6.62	87.60	59.81	69.25
11/5	8.70	85.47	60.11	68.74
11/6	7.13	85.28	60.37	68.82
11/7	12.45	82.37	61.23	68.39
11/8	M	M	M	M
11/9	10.14	83.96	62.40	69.53
11/10	12.86	83.57	62.53	69.49
11/11	14.68	82.51	63.97	70.00

*M – Missing data

Table 2.3-7e

CGS Hourly Meteorological Data, July 4-12, 1975 (33 ft Level)*
(Ultimate Heat Sink Studies)

Day/Hour	Wind Speed mph	Dry Bulb °F	Dewpoint °F	Wet Bulb °F
11/12	13.48	84.13	64.96	71.06
11/13	11.16	87.73	62.91	70.96
11/14	11.36	87.76	63.12	71.08
11/15	8.17	89.92	61.81	71.00
11/16	4.60	94.72	59.97	71.46
11/17	4.39	96.19	59.89	71.85
11/18	4.27	96.16	58.85	71.33
11/19	11.57	89.28	64.05	72.05
11/20	9.70	84.99	61.07	69.10
11/21	8.24	83.01	60.69	68.28
11/22	6.89	82.00	61.09	68.20
11/23	10.12	81.97	59.39	67.25
11/24	10.69	78.83	57.81	65.38
12/1	10.37	77.65	57.01	64.57
12/2	7.69	76.64	56.85	64.14
12/3	3.17	75.87	56.32	63.59
12/4	2.34	75.71	56.99	63.89
12/5	5.74	73.92	58.64	64.18
12/6	6.75	70.51	56.51	61.81
12/7	6.57	73.07	57.71	63.38
12/8	4.62	76.88	59.63	65.73
12/9	4.23	79.71	60.93	67.38
12/10	4.51	82.69	61.44	68.61
12/11	5.53	84.13	61.01	68.81
12/12	5.53	86.43	61.65	69.86
12/13	5.93	88.75	62.40	70.98
12/14	6.81	90.69	62.93	71.85
12/15	10.87	91.31	61.73	71.37
12/16	12.07	87.20	60.19	69.32
12/17	15.02	86.96	62.24	70.36
12/18	12.21	87.39	61.36	70.00
12/19	15.39	83.63	62.45	69.46
12/20	13.48	81.47	60.80	67.87
12/21	8.45	81.76	58.77	66.86
12/22	7.23	81.36	54.43	64.51
12/23	9.74	79.41	44.32	59.39
12/24	5.68	77.73	43.97	58.63

Table 2.3-7f

24 Hour HMS Meteorological Profile for August 4, 1961

Hour	Dry Bulb Temp °F	Wet Bulb Temp °F	Dew Pt °F	Wind (mph) °F
0	82.0	61.0	45.0	4
1	84.0	62.0	46.0	5
2	86.0	63.0	48.0	5
3	85.0	63.0	49.0	5
4	85.0	63.0	48.0	5
5	85.0	62.0	46.0	3
6	86.0	61.0	43.0	8
7	91.0	63.0	42.0	7
8	92.0	63.0	42.0	6
9	96.0	64.0	41.0	6
10	99.0	65.0	42.0	7
11	103.0	67.0	44.0	6
12	107.0	69.0	45.0	6
13	110.0	70.0	46.0	5
14	112.0	71.0	48.0	6
15	112.0	71.0	48.0	5
16	113.0	72.0	49.0	5
17	110.0	70.0	45.0	8
18	108.0	68.0	43.0	14
19	100.0	66.0	45.0	19
20	98.0	66.0	45.0	20
21	96.0	66.0	46.0	18
22	94.0	65.0	46.0	16
23	93.0	64.0	45.0	12

24 Hour Average:

Dry Bulb = 96.96 °F
Wet Bulb = 65.62 °F
Dew Point = 45.29 °F
Wind = 8.37 mph

Table 2.3-7g

Diurnal Variation in Dry Bulb and Wet Bulb Temperature for Use in Analyzing Second Through Thirtieth Day Pond Thermal Performance (Based On July 9 - August 8, 1961 Hourly Hanford Meteorological Station Data)

Hour	Dry Bulb (°F)	Wet Bulb (°F)
1	70.2	56.5
2	68.8	56.0
3	68.3	55.8
4	68.8	56.0
5	70.2	56.5
6	72.5	57.3
7	75.6	58.4
8	79.0	59.6
9	82.8	61.0
10	86.6	62.3
11	90.1	63.6
12	93.1	64.7
13	95.4	65.5
14	96.8	66.0
15	97.3	66.2
16	96.8	66.0
17	95.4	65.5
18	93.1	64.7
19	90.1	63.6
20	86.6	62.3
21	82.8	61.0
22	79.0	59.6
23	75.6	58.4
24	72.5	57.3
Daily Average and Variation	82.8 ± 14.5°F	61.0 ± 5.2°F

Table 2.3-7h

Diurnal Variation in Dry Bulb and Wet Bulb Temperature for Use in Analyzing First Through Thirtieth Day Maximum Mass Loss (Based On July 2 - August 1, 1960 Hourly Hanford Meteorological Station Data)

Hour	Dry Bulb (°F)	Wet Bulb (°F)
1	69.4	53.3
2	67.8	52.6
3	67.3	52.4
4	67.8	52.6
5	69.4	53.3
6	71.9	54.3
7	75.1	55.7
8	78.9	57.3
9	82.9	59.0
10	86.9	60.7
11	90.7	62.3
12	93.9	63.7
13	96.4	64.7
14	98.0	65.4
15	98.5	65.6
16	98.0	65.4
17	96.4	64.7
18	93.9	63.7
19	90.7	62.3
20	86.9	60.7
21	82.9	59.0
22	78.9	57.3
23	75.1	55.7
24	71.9	54.3
Daily Average and Variation	82.9 ± 15.6°F	59.0 ± 6.6°F

Table 2.3-8a

Summary of CGS Onsite Meteorological Data Collected During the First and Second Annual Cycles as Compared to Corresponding Hanford Meteorological Station Data (Historical HMS Data Indicated for Each Month)

		April		May		June		July		August		September		October	
Site and Sensor Elevation		'74	'75	'74	'75	'74	'75	'74	'75	'74	'75	'74	'75	'74	'75
1. Prevailing Wind Direction															
CGS	33'	WNW	SSW	SSW	NW	WNW	NW	S	S	S	S	N	N	WNW	S
HMS	50'	WNW	N/A	WNW	N/A	WNW	N/A	WNW	N/A	WNW	N/A	NW	N/A	NW	NW
HMS (hist) 50' (1955-1970)		WNW		WNW		WNW		WNW		WNW		NW		WNW	
2. Mean Wind Speed (mph)															
CGS	33'	9.8	8.0	8.4	8.7	8.5	9.3	7.2	7.6	6.8	7.9	6.5	5.7	4.8	7.2
HMS	50'	10.3	9.0	9.0	9.6	9.0	10.5	8.1	8.5	7.5	9.0	7.1	6.8	5.6	7.1
HMS (hist) 50' (1955-1970)		9.0		8.8		9.2		8.6		8.0		7.5		6.7	
3. Mean Dry Bulb Temp. (°F)															
CGS	33'	52.2	47.6	57.4	59.6	72.5	66.1	73.6	78.7	74.7	70.3	66.9	66.2	51.7	52.1
HMS	3'	52.5	48.4	57.9	60.7	73.3	67.3	74.8	80.0	76.3	71.2	68.3	67.9	52.0	52.3
HMS (hist) 3' (1950-1970)		52.5		61.8		69.9		77.5		75.3		67.0		53.2	
4. Mean Wet Bulb Temp. (°F)															
CGS	33'	44.7	39.7	47.2	48.2	56.0	52.7	57.4	61.5	58.0	55.7	52.6	52.0	43.8	45.3
HMS	3'	43.9	40.0	46.5	49.0	54.5	54.0	56.3	62.0	57.0	56.0	52.0	52.0	42.0	45.0
HMS (hist) 3' (1950-1970)		42.8		49.1		54.5		57.9		57.3		52.6		45.4	
5. Mean Dew Point Temp. (°F)															
CGS	33'	36.6	29.8	36.6	36.9	43.0	40.8	44.9	50.2	45.6	44.2	39.9	39.5	35.0	38.2
HMS	3'	33.3	30.0	34.0	38.6	38.2	42.4	41.0	50.1	43.2	44.6	38.9	38.2	31.0	37.2
HMS (hist) 3' (1950-1970)		30.4		36.0		41.2		42.3		42.8		39.5		36.9	
6. Total Precipitation (inches)															
CGS		.55	.53	.44	.47	.06	.46	.45	.09	0.0	1.17	.06	0.0	.10	.74
HMS		.46	.42	.28	.38	.12	.14	.71	.32	Trace	1.16	.01	.03	.21	.87
HMS (hist) 1946-1970 Mean Total		.44		.50		.66		.16		.21		.30		.61	

N/A - Not Available

Table 2.3-8a

Summary of CGS Onsite Meteorological Data Collected During the First and Second Annual Cycles as Compared to Corresponding Hanford Meteorological Station Data (Historical HMS Data Indicated for Each Month) (Continued)

Site and Sensor Elevation	November '74	November '75	December '74	December '75	January '75	January '76	February '75	February '76	March '75	March '76	First Annual Cycle April '74– March '75	Second Annual Cycle April '75– March '76
1. Prevailing Wind Direction												
CGS 33'	SSW	S	S	NW	NNW	NW	NW	SSW	NNW	SSW	NW	NW
HMS 50'	NW	NW	NW	NW	NW SW	NW	NW SW		WNW	NW SW	N/A	N/A
HMS (hist) 50' (1955-1970)	NW		NW		NW		NW		WNW		NW ('55 –'70)	
2. Mean Wind Speed (mph)												
CGS 33'	5.8	7.8	6.4	7.1	6.4	5.0	7.8	10.4	8.7	9.1	7.2	7.8
HMS 50'	5.5	7.7	5.9	7.2	6.4	4.9	7.5	10.8	8.9	9.6	9.1	10.1
HMS (hist) 50' (1955-1970)	6.2		6.0		6.4		7.0		8.4		7.6 ('55 – '70)	
3. Mean Dry Bulb Temp. (°F)												
CGS 33'	42.1	39.5	36.8	34.2	32.3	32.4	33.8	37.7	41.9	40.8	53.1	52.1
HMS 3'	42.1	39.3	35.7	34.5	32.0	31.5	33.6	37.3	42.0	40.6	53.4	52.6
HMS (hist) 3' (1950-1970)	40.1		33.4		30.3		37.5		44.0		53.5 ('50 – '70)	
4. Mean Wet Bulb Temp. (°F)												
CGS 33'	39.3	35.5	34.5	31.9	30.0	30.6	30.9	32.9	36.2	34.4	44.3	43.4
HMS 3'	38.0	35.0	33.0	32.0	30.0	30.0	31.0	33.0	36.0	35.0	43.4	43.6
HMS (hist) 3' (1950-1970)	36.4		31.2		27.9		33.6		37.3		43.8 ('50 – '70)	
5. Mean Dew Point Temp. (°F)												
CGS 33'	36.3	30.6	31.4	28.9	26.3	28.1	26.5	25.4	27.9	24.8	35.9	34.8
HMS 3'	33.9	30.0	29.2	28.1	26.0	27.6	25.5	25.5	26.0	25.0	33.4	34.8
HMS (hist) 3' (1950-1970)	31.1		27.5		23.2		27.4		27.3		33.8 ('50 – '70)	
6. Total Precipitation (inches)												
CGS	.56	.70	.67	.03	.93	.08	.67	.11	.52	.16	4.92	4.54
HMS	.71	.60	.97	.70	1.43	.56	.98	.36	.33	.23	6.21	5.87
HMS (hist) 1946-1970 Mean Total	.80		.81		.97		.58		.38		6.53 ('46 – '70)	

N/A - Not Available

Table 2.3-8b

Frequency of Occurrence of Wind Direction Versus Speed for CGS 33-ft Level (1974-1975)

APRIL
SPEED CLASS (MPH)

	CALM	1-3	4-7	8-12	13-18	19-24	25-UP	UNKNO	TOTAL
NNE	0	5	8	6	0	0	0	0	19
NE	0	2	15	4	0	0	0	1	22
ENE	0	1	2	0	0	0	0	0	3
E	0	3	3	0	0	0	0	0	6
ESE	0	6	4	1	0	0	0	0	11
SE	0	4	12	6	1	0	0	0	23
SSE	0	4	26	21	0	0	0	3	54
S	0	8	18	19	12	0	0	7	64
SSW	0	4	16	29	30	2	0	13	94
SW	0	4	18	9	15	4	0	6	56
WSW	0	3	10	12	5	3	1	7	41
W	0	3	14	16	17	4	1	8	63
WNW	0	7	19	26	40	21	8	2	123
NW	0	5	23	15	9	11	3	1	67
NNW	0	5	17	5	1	0	0	2	30
N	0	3	14	5	1	0	0	0	23
VAR	0	2	5	0	0	0	0	0	7
CALM	0	0	0	0	0	0	0	0	0
UNKNO	0	0	0	0	0	0	0	14	14
TOTAL	0	69	224	176	131	45	13	64	720

MAY
SPEED CLASS (MPH)

	CALM	1-3	4-7	8-12	13-18	19-24	25-UP	UNKNO	TOTAL
NNE	0	5	11	0	0	0	0	0	16
NE	0	7	3	3	0	0	0	0	13
ENE	0	1	6	2	0	0	0	0	9
E	0	8	6	0	0	0	0	0	14
ESE	0	6	9	0	0	0	0	0	15
SE	0	1	16	1	0	0	0	0	18
SSE	0	9	38	13	0	0	0	0	60
S	0	10	27	45	10	0	0	0	92
SSW	0	5	30	49	16	4	2	0	106
SW	0	3	15	18	13	3	0	0	52
WSW	0	6	19	30	13	1	0	0	69
W	0	3	23	35	13	5	0	0	79
WNW	0	11	24	34	17	10	0	0	96
NW	0	4	14	10	13	4	2	0	47
NNW	0	3	13	7	0	0	0	0	23
N	0	4	7	1	0	0	0	0	12
VAR	0	7	8	0	0	0	0	0	15
CALM	0	0	0	0	0	0	0	0	0
UNKNO	0	0	0	0	0	0	0	8	8
TOTAL	0	93	269	248	95	27	4	8	744

JUNE
SPEED CLASS (MPH)

	CALM	1-3	4-7	8-12	13-18	19-24	25-UP	UNKNO	TOTAL
NNE	0	5	12	1	0	0	0	0	18
NE	0	7	9	4	0	0	0	1	21
ENE	0	6	16	9	0	0	0	0	31
E	0	3	14	7	0	0	0	0	24
ESE	0	4	16	6	0	0	0	0	26
SE	0	4	23	10	0	0	0	0	37
SSE	0	7	34	11	0	0	0	0	52
S	0	4	20	18	10	2	0	1	55
SSW	0	6	20	12	12	1	0	0	51
SW	0	3	11	6	4	5	0	0	29
WSW	0	3	15	5	3	1	1	0	28
W	0	2	18	14	13	2	3	0	52
WNW	0	2	24	19	10	10	2	0	67
NW	0	3	15	20	8	5	2	0	53
NNW	0	6	17	3	0	0	0	0	26
N	0	6	11	1	0	0	0	0	18
VAR	0	0	4	0	1	0	0	0	5
CALM	0	0	0	0	0	0	0	0	0
UNKNO	0	10	38	26	9	0	0	44	127
TOTAL	0	81	317	172	70	26	8	46	720

Table 2.3-8b

Frequency of Occurrence of Wind Direction Versus Speed for CGS 33-ft Level (1974-1975) (Continued)

JULY
SPEED CLASS (MPH)

	CALM	1-3	4-7	8-12	13-18	19-24	25-UP	UNKNO	TOTAL
NNE	0	3	13	2	0	0	0	0	18
NE	0	11	12	1	0	0	0	0	24
ENE	0	3	9	6	0	0	0	0	18
E	0	10	14	6	0	0	0	0	30
ESE	0	6	18	1	0	0	0	0	25
SE	0	10	26	4	0	0	0	0	40
SSE	0	3	37	16	1	0	0	0	57
S	0	6	27	32	5	0	0	0	70
SSW	0	9	16	18	9	2	0	0	54
SW	0	7	22	14	6	0	1	0	50
WSW	0	6	12	11	3	1	2	0	35
W	0	7	14	19	9	0	0	0	49
WNW	0	5	18	18	17	5	0	0	63
NW	0	11	18	21	13	4	0	0	67
NNW	0	10	25	4	2	0	0	0	41
N	0	8	22	5	0	0	0	0	35
VAR	0	5	24	3	0	0	0	0	32
CALM	0	0	0	0	0	0	0	0	0
UNKNO	0	0	0	0	0	0	0	36	36
TOTAL	0	120	327	181	65	12	3	36	744

AUGUST
SPEED CLASS (MPH)

	CALM	1-3	4-7	8-12	13-18	19-24	25-UP	UNKNO	TOTAL
NNE	0	16	21	11	0	0	0	0	48
NE	0	12	19	6	3	2	0	0	42
ENE	0	9	6	0	0	0	0	0	15
E	0	10	4	4	0	0	0	0	18
ESE	0	12	9	0	0	0	0	0	21
SE	0	6	25	1	0	0	0	0	32
SSE	0	8	39	16	0	0	0	0	63
S	0	7	33	28	4	3	0	0	75
SSW	0	11	24	17	13	1	0	0	66
SW	0	8	16	8	0	1	0	0	33
WSW	0	9	18	1	0	0	0	0	28
W	0	4	13	6	3	0	0	0	26
WNW	0	8	19	13	22	10	1	0	73
NW	0	12	27	12	8	8	0	0	67
NNW	0	4	35	10	0	0	0	0	49
N	0	15	32	10	0	0	0	0	57
VAR	0	12	5	1	0	0	0	0	18
CALM	0	0	0	0	0	0	0	0	0
UNKNO	0	0	0	0	0	0	0	13	13
TOTAL	0	163	345	144	53	25	1	13	744

SEPTEMBER
SPEED CLASS (MPH)

	CALM	1-3	4-7	8-12	13-18	19-24	25-UP	UNKNO	TOTAL
NNE	0	19	29	10	11	0	0	0	69
NE	0	21	11	5	2	0	0	0	39
ENE	0	20	20	0	0	0	0	0	40
E	0	17	7	0	0	0	0	0	24
ESE	0	15	11	1	0	0	0	0	27
SE	0	7	11	3	0	0	0	0	21
SSE	0	1	13	7	0	0	0	0	21
S	0	8	22	25	4	0	0	0	59
SSW	0	5	18	11	3	1	0	0	38
SW	0	12	11	3	3	0	0	0	29
WSW	0	8	5	3	1	0	0	0	17
W	0	12	10	10	4	0	0	0	36
WNW	0	9	12	17	12	5	1	0	56
NW	0	9	19	24	8	4	1	0	65
NNW	0	12	29	14	3	0	1	0	59
N	0	15	38	28	12	0	0	0	93
VAR	0	10	8	1	0	0	0	0	19
CALM	0	0	0	0	0	0	0	0	0
UNKNO	0	0	0	0	0	0	0	8	8
TOTAL	0	200	274	162	63	10	3	8	720

Table 2.3-8b

Frequency of Occurrence of Wind Direction Versus Speed for CGS 33-ft Level (1974-1975) (Continued)

OCTOBER
SPEED CLASS(MPH)

	CALM	1-3	4-7	8-12	13-18	19-24	25-UP	UNKNO	TOTAL
NNE	0	26	15	1	0	0	0	0	42
NE	0	26	17	0	0	0	0	0	43
ENE	0	26	22	1	0	0	0	0	49
E	0	20	4	0	0	0	0	0	24
ESE	0	15	2	0	0	0	0	0	17
SE	0	15	19	2	0	0	0	0	36
SSE	0	16	21	8	0	0	0	0	45
S	0	13	25	13	0	0	0	0	51
SSW	0	15	21	6	0	0	0	0	42
SW	0	12	13	1	0	0	0	0	26
WSW	0	15	11	2	0	0	0	0	28
W	0	12	9	10	5	1	0	0	37
WNW	0	21	11	15	11	6	0	0	64
NW	0	17	17	12	7	0	0	0	53
NNW	0	29	20	9	2	0	0	0	60
N	0	37	24	3	0	0	0	0	64
VAR	0	16	4	0	0	0	0	0	20
CALM	1	0	0	0	0	0	0	0	1
UNKNO	0	0	0	0	0	0	0	42	42
TOTAL	1	331	255	83	25	7	0	42	744

NOVEMBER
SPEED CLASS(MPH)

	CALM	1-3	4-7	8-12	13-18	19-24	25-UP	UNKNO	TOTAL
NNE	0	18	14	4	0	0	0	2	38
NE	0	10	13	2	0	0	0	1	26
ENE	0	13	10	7	0	0	0	1	31
E	0	6	2	0	0	0	0	0	8
ESE	0	12	3	0	0	0	0	0	15
SE	0	14	13	7	0	0	0	0	34
SSE	0	7	28	15	3	0	0	0	53
S	0	12	29	29	5	0	0	0	75
SSW	0	11	32	14	19	1	0	0	77
SW	0	12	20	6	8	4	0	0	50
WSW	0	9	6	5	2	2	0	0	24
W	0	12	14	3	1	2	0	3	35
WNW	0	22	14	7	5	1	0	2	51
NW	0	27	34	12	0	1	0	1	75
NNW	0	24	34	2	0	0	0	0	60
N	0	30	17	3	0	0	0	0	50
VAR	0	11	2	0	0	0	0	0	13
CALM	0	0	0	0	0	0	0	0	0
UNKNO	0	0	0	0	0	0	0	5	5
TOTAL	0	250	285	116	43	11	0	15	720

DECEMBER
SPEED CLASS(MPH)

	CALM	1-3	4-7	8-12	13-18	19-24	25-UP	UNKNO	TOTAL
NNE	0	12	3	2	0	0	0	0	17
NE	0	9	5	2	0	0	0	0	16
ENE	0	5	4	0	0	0	0	0	9
E	0	6	1	0	0	0	0	0	7
ESE	0	8	1	1	0	0	0	0	10
SE	0	9	6	5	1	0	0	0	21
SSE	0	5	26	25	3	1	0	0	60
S	0	11	39	35	14	1	0	0	100
SSW	0	14	23	29	9	4	3	0	82
SW	0	14	11	9	2	0	0	0	36
WSW	0	16	17	6	3	2	1	0	45
W	0	20	15	7	3	3	4	0	52
WNW	0	27	25	21	6	1	1	0	81
NW	0	17	59	11	3	0	0	1	91
NNW	0	29	27	6	0	0	0	0	62
N	0	21	12	0	1	0	0	0	34
VAR	0	8	3	1	0	0	0	0	12
CALM	0	0	0	0	0	0	0	0	0
UNKNO	0	0	0	0	0	0	0	9	9
TOTAL	0	231	277	160	45	12	9	10	744

Table 2.3-8b

Frequency of Occurrence of Wind Direction Versus Speed for CGS 33-ft Level (1974-1975) (Continued)

JANUARY
SPEED CLASS(MPH)

	CALM	1-3	4-7	8-12	13-18	19-24	25-UP	UNKNO	TOTAL
NNE	0	11	17	6	0	0	0	0	34
NE	0	13	11	4	0	0	0	0	28
ENE	0	10	12	5	0	0	0	6	33
E	0	5	10	1	0	0	0	2	18
ESE	0	15	5	2	0	0	0	1	23
SE	0	10	14	1	0	1	0	1	27
SSE	0	13	17	15	2	1	0	0	48
S	0	10	14	16	6	0	0	0	46
SSW	0	6	18	10	15	3	0	0	52
SW	0	15	14	5	7	4	2	1	48
WSW	0	13	16	4	3	6	3	0	45
W	0	8	8	8	4	0	0	0	28
WNW	0	23	14	13	0	0	0	1	51
NW	0	20	37	19	3	0	0	10	89
NNW	0	29	47	22	0	0	0	4	102
N	0	11	17	15	0	0	0	1	44
VAR	0	7	3	1	0	0	0	0	11
CALM	0	0	0	0	0	0	0	0	0
UNKNO	0	0	0	0	0	0	0	17	17
TOTAL	0	219	274	147	40	15	5	44	744

FEBRUARY
SPEED CLASS(MPH)

	CALM	1-3	4-7	8-12	13-18	19-24	25-UP	UNKNO	TOTAL
NNE	0	15	15	2	0	0	0	0	32
NE	0	8	8	0	0	0	0	0	16
ENE	0	5	8	0	0	0	0	0	13
E	0	4	2	0	0	0	0	0	6
ESE	0	5	5	1	0	0	0	0	11
SE	0	6	10	3	1	0	0	0	20
SSE	0	14	20	13	4	1	0	0	52
S	0	14	11	18	8	2	0	0	53
SSW	0	9	8	10	9	18	1	0	55
SW	0	4	9	3	9	4	4	0	33
WSW	0	9	7	3	7	4	1	0	31
W	0	4	11	6	1	1	1	0	24
WNW	0	7	14	9	2	2	1	0	35
NW	0	12	54	45	10	3	2	0	126
NNW	0	14	45	24	14	0	0	0	97
N	0	16	19	19	1	0	0	0	55
VAR	0	5	2	1	0	0	0	0	8
CALM	0	0	0	0	0	0	0	0	0
UNKNO	0	0	0	0	0	0	0	5	5
TOTAL	0	151	248	157	66	35	10	5	672

MARCH
SPEED CLASS(MPH)

	CALM	1-3	4-7	8-12	13-18	19-24	25-UP	UNKNO	TOTAL
NNE	0	6	8	5	2	0	0	0	21
NE	0	5	4	1	0	0	0	0	10
ENE	0	4	4	1	0	0	0	0	9
E	0	6	2	2	0	0	0	0	10
ESE	0	9	5	1	0	0	0	0	15
SE	0	2	6	7	3	0	0	0	18
SSE	0	5	24	22	3	0	0	0	54
S	0	3	28	35	13	0	0	0	79
SSW	0	1	15	24	16	6	0	0	62
SW	0	5	9	14	31	14	0	0	73
WSW	0	4	7	12	8	6	0	0	37
W	0	1	12	2	0	1	0	0	16
WNW	0	6	21	19	2	0	4	0	52
NW	0	13	32	27	6	1	4	0	83
NNW	0	9	37	23	12	5	0	0	86
N	0	11	18	6	9	0	0	0	44
VAR	0	7	5	0	0	0	0	0	12
CALM	0	0	0	0	0	0	0	0	0
UNKNO	0	0	0	0	0	0	0	63	63
TOTAL	0	97	237	201	105	33	8	63	744

Table 2.3-8b

Frequency of Occurrence of Wind Direction Versus Speed for CGS 33-ft Level (1974-1975) (Continued)

	ANNUAL SPEED CLASS (MPH)								
	CALM	1-3	4-7	8-12	13-18	19-24	25-UP	UNKNO	TOTAL
NNE	0	141	166	50	13	0	0	2	372
NE	0	131	127	32	5	2	0	3	300
ENE	0	103	119	31	0	0	0	7	260
E	0	98	69	20	0	0	0	2	189
ESE	0	113	88	14	0	0	0	1	216
SE	0	88	181	50	6	1	0	1	327
SSE	0	92	323	182	16	3	0	3	619
S	0	106	293	313	91	8	0	8	819
SSW	0	96	241	229	151	43	6	13	779
SW	0	99	169	96	98	39	7	7	515
WSW	0	101	143	94	48	26	9	7	428
W	0	88	161	136	73	19	9	11	497
WNW	0	148	215	211	144	71	18	5	812
NW	0	150	349	228	88	41	14	13	883
NNW	0	174	346	129	34	5	1	6	695
N	0	177	231	96	24	0	0	1	529
VAR	0	90	73	8	1	0	0	0	172
CALM	1	0	0	0	0	0	0	0	1
UNKNO	0	10	38	26	9	0	0	264	347
TOTAL	0	2005	3332	1945	801	258	64	354	8760

Table 2.3-9

Percentage Frequency Distribution of 50-ft Wind Direction Versus Speed at HMS (1955-1970)

JANUARY
SPEED CLASS (MPH)

DIRECTION	0-3	4-7	8-12	13-18	19-24	25-31	32-38	39-46	46	TOTAL	AVG SPEED
N	2.8	1.2	0.2	0.3	0.2					4.7	4.3
NNE	2.0	0.8	0.4	0.1	0.1	#				3.4	4.6
NE	1.8	0.7	0.2	0.1	0.1	#				2.9	4.4
ENE	1.3	0.5	0.1	#	#					1.9	3.0
E	1.8	0.6	0.1	#						2.4	3.0
ESE	1.8	0.7	0.2	0.1	#					2.8	3.4
SE	2.7	1.5	0.4	0.2	#	#				4.8	4.0
SSE	1.6	0.8	0.3	0.1	0.1					2.9	5.4
S	1.4	0.9	0.4	0.5	0.2	0.1	0.1	#		3.6	7.7
SSW	1.2	1.0	0.6	1.0	0.6	0.3	0.1	#		4.8	11.5
SW	1.4	1.4	1.4	1.6	0.7	0.3	#			6.8	10.7
WSW	1.4	1.5	1.7	0.8	0.4	0.2	#			6.0	8.9
W	1.8	2.3	1.3	10.6	0.1					6.1	6.3
WNW	2.4	5.6	5.1	0.9	#	#				14.0	7.1
NW	3.6	7.8	6.6	1.2	0.1	#				19.3	6.9
NNW	3.0	2.8	0.6	0.1	#					6.5	4.2
VAR	1.3	0.1								1.4	1.8
CALM	5.4									5.4	
TOTAL	38.7	30.1	19.6	7.6	2.6	0.9	0.2	#		100.0	6.2

# DENOTES LESS THAN 0.05%

FEBRUARY
SPEED CLASS (MPH)

DIRECTION	0-3	4-7	8-12	13-18	19-24	25-31	32-38	39-46	46	TOTAL	AVG SPEED
N	2.6	1.6	0.4	0.2	#	#				4.8	4.5
NNE	1.8	1.3	0.8	0.4	0.1	0.1				4.5	6.3
NE	2.2	0.9	0.2	0.2	#					3.5	3.8
ENE	1.3	0.6	0.1							1.9	3.3
E	1.3	0.7	#							2.0	3.0
ESE	1.3	0.7	0.1							2.1	3.3
SE	1.9	1.1	0.3	0.1						3.4	4.0
SSE	1.2	0.8	0.4	0.2	#					2.6	5.2
S	1.3	0.7	0.4	0.3	0.1	0.1				2.9	6.6
SSW	1.0	1.0	0.8	0.6	0.5	0.2	0.1	#		4.2	10.5
SW	1.0	1.6	1.3	1.8	1.1	0.5	0.1	#		7.4	12.6
WSW	0.9	2.1	2.1	1.4	0.5	0.3	0.1	#		7.4	10.5
W	1.6	3.4	2.9	1.1	0.2	0.1				9.3	7.8
WNW	1.9	4.9	6.8	1.5	0.3	0.1				15.5	8.3
NW	3.3	6.9	6.4	1.5	0.2	0.1				18.4	7.3
NNW	2.3	2.5	0.8	0.1	#					5.7	4.8
VAR	1.3	0.2	#							1.5	1.8
CALM	2.4									2.4	
TOTAL	30.6	31.0	23.8	9.4	3.0	1.5	0.3			100.0	7.1

# DENOTES LESS THAN 0.05%

MARCH
SPEED CLASS (MPH)

DIRECTION	0-3	4-7	8-12	13-18	19-24	25-31	32-38	39-46	46	TOTAL	AVG SPEED
N	1.9	1.8	1.0	0.2	#					4.9	5.4
NNE	1.4	1.6	0.9	0.6	#	#				4.5	6.8
NE	1.7	1.2	0.3	0.2	0.1	#				3.5	4.8
ENE	0.7	0.8	0.1	#	#	#				1.6	5.0
E	0.9	0.8	0.2	#	#					1.9	4.2
ESE	1.0	1.1	0.2	0.1						2.4	4.4
SE	1.4	1.7	0.5	0.1	#					3.7	5.0
SSE	0.6	1.1	0.8	0.3	#					2.8	7.1
S	1.0	1.4	0.7	0.4	0.2	#				3.7	7.4
SSW	0.6	1.3	1.1	1.2	0.7	0.3	0.1			5.3	12.1
SW	0.8	2.0	2.0	2.5	1.5	0.8	0.2	#	#	9.8	13.5
WSW	0.8	2.5	3.0	2.5	1.0	0.4	0.2			10.4	11.7
W	1.1	3.9	3.1	1.2	0.2	0.1				9.6	8.2
WNW	1.1	4.4	5.8	2.2	0.8	0.1				14.4	9.5
NW	1.5	4.4	5.3	1.8	0.6	0.1				13.7	8.9
NNW	1.4	2.4	1.1	0.2	#					5.1	5.6
VAR	1.3	0.2	#							1.5	2.1
CALM	0.7									0.7	
TOTAL	19.9	32.6	26.1	13.5	5.1	1.8	0.5			100.0	8.6

# DENOTES LESS THAN 0.05%

APRIL
SPEED CLASS (MPH)

DIRECTION	0-3	4-7	8-12	13-18	19-24	25-31	32-38	39-46	46	TOTAL	AVG SPEED
N	1.6	1.6	0.7	0.3	#					4.2	5.5
NNE	1.0	1.3	0.6	0.3	0.1	#				3.3	6.8
NE	1.4	1.2	0.4	0.2	#	#				3.2	5.3
ENE	0.6	1.0	0.2	0.1						1.9	5.2
E	0.8	1.0	0.5	#						2.3	5.0
ESE	0.8	1.0	0.2	#						2.0	4.5
SE	1.0	1.5	0.5	0.1						3.1	5.2
SSE	0.5	1.0	0.8	0.2						2.5	6.8
S	0.7	1.4	0.7	0.3	0.1	#				3.2	6.7
SSW	0.7	1.5	1.1	0.9	0.4	0.1				4.7	9.6
SW	0.7	2.3	2.1	2.1	1.6	0.6	0.1			9.5	12.7
WSW	0.8	2.6	3.8	2.5	1.1	0.4	0.1			11.3	11.4
W	1.1	4.2	4.3	1.7	0.5	0.1	#			11.9	8.8
WNW	0.8	3.9	6.0	4.2	1.3	0.3				16.5	11.0
NW	1.2	3.7	4.2	3.2	1.5	0.4	#			14.2	11.0
NNW	0.9	1.9	0.6	0.2	#					3.6	5.8
VAR	1.6	0.5								2.1	2.7
CALM	0.5									0.5	
TOTAL	16.7	31.6	26.7	16.3	6.6	1.9	0.2			100.0	9.1

# DENOTES LESS THAN 0.05%

Table 2.3-9

Percentage Frequency Distribution of 50-ft Wind Direction Versus Speed at HMS (1955-1970) (Continued)

MAY
SPEED CLASS (MPH)

DIRECTION	0-3	4-7	8-12	13-18	19-24	25-31	32-38	39-46	46	TOTAL	AVG SPEED
N	1.2	1.7	0.9	0.1						3.9	5.7
NNE	0.6	1.4	0.7	0.3	#					3.0	6.7
NE	1.0	1.5	1.0	0.1	0.1					3.7	6.4
ENE	0.8	1.1	0.3	0.1						2.3	5.0
E	0.9	1.2	0.3	#						2.4	4.7
ESE	0.9	1.0	0.3	#						2.2	4.6
SE	1.0	1.5	0.6	0.1						3.2	5.4
SSE	0.6	1.3	0.6	0.2	#					2.7	6.4
S	0.6	1.7	0.5	0.1	#					2.9	5.6
SSW	0.7	1.3	0.8	0.4	0.1	#				3.3	7.4
SW	0.6	2.4	1.7	1.1	0.5	0.1	#			6.4	9.6
WSW	0.9	2.7	3.5	1.8	0.7	0.2	#			9.8	10.1
W	1.2	4.0	4.4	1.6	0.2	#				11.4	8.3
WNW	0.8	3.9	6.7	4.7	1.7	0.2	#			18.0	11.2
NW	1.2	3.6	4.9	4.4	2.6	0.5	#			17.2	12.0
NNW	1.0	1.8	0.7	0.1						3.6	5.5
VAR	1.9	1.3	#							3.2	3.2
CALM	0.6									0.6	
TOTAL	16.5	33.4	27.9	15.1	5.9	1.0	#			100.0	8.7

# DENOTES LESS THAN 0.05%

JUNE
SPEED CLASS (MPH)

DIRECTION	0-3	4-7	8-12	13-18	19-24	25-31	32-38	39-46	46	TOTAL	AVG SPEED
N	0.9	2.0	0.9	0.2						4.0	6.0
NNE	0.6	1.8	0.8	0.4	#					3.6	7.1
NE	0.8	1.4	0.8	0.5	0.1	#				3.6	7.5
ENE	0.4	1.0	0.4	0.1	#	#				1.9	6.5
E	0.5	1.3	0.3	#	#					2.1	5.6
ESE	0.6	1.3	0.3	#						2.2	5.0
SE	0.7	1.6	0.4	#						2.7	5.2
SSE	0.5	1.1	0.4	0.1	#					2.1	5.8
S	0.6	1.7	0.3	0.1						2.7	5.5
SSW	0.4	1.5	0.7	0.2	0.1	#				2.9	7.3
SW	0.7	2.5	2.0	1.0	0.3	#				6.5	8.8
WSW	0.6	2.5	3.5	1.5	0.4	0.1	#			8.6	9.7
W	0.7	4.1	4.4	1.6	0.3	#				11.1	8.8
WNW	0.6	3.5	6.9	6.2	2.1	0.4	#			19.7	12.1
NW	0.7	3.7	5.1	5.4	3.4	0.7	#			19.0	13.0
NNW	0.6	2.0	0.8	0.1	#	#				3.5	6.3
VAR	1.6	1.7	#							3.3	3.4
CALM	0.3									0.3	
TOTAL	11.8	34.7	28.0	17.4	6.7	1.2				100.0	9.3

# DENOTES LESS THAN 0.05%

JULY
SPEED CLASS (MPH)

DIRECTION	0-3	4-7	8-12	13-18	19-24	25-31	32-38	39-46	46	TOTAL	AVG SPEED
N	1.1	2.6	0.6	0.1						4.4	5.3
NNE	0.7	2.1	0.8	0.2	#					3.8	6.0
NE	0.9	2.1	0.5	0.2	#					3.7	5.7
ENE	0.5	1.2	0.2	#						1.9	5.0
E	0.7	1.5	0.3							2.5	4.9
ESE	0.7	1.3	0.3	#						2.3	4.9
SE	0.9	1.7	0.3	#						2.9	4.9
SSE	0.4	1.0	0.4	#	#	#				1.8	5.6
S	0.7	1.5	0.2	0.1	#	#				2.5	5.3
SSW	0.5	1.3	0.5	0.2	0.4	#				2.5	6.5
SW	0.8	2.3	1.7	1.0	0.4	0.1	#			6.3	9.1
WSW	0.7	3.0	2.8	1.4	0.1	0.2	#			8.5	9.5
W	1.0	4.4	3.5	0.9	1.8	#				9.9	7.7
WNW	0.7	4.2	7.7	4.8	3.0	0.2				19.4	11.2
NW	0.9	3.8	5.6	5.1	#	0.5				18.9	12.4
NNW	0.8	2.0	0.7	0.1						3.6	5.8
VAR	2.6	1.8	#							4.4	3.3
CALM	0.4									0.4	
TOTAL	15.0	37.8	26.1	14.1	5.7	1.0				100.0	8.6

# DENOTES LESS THAN 0.05%

AUGUST
SPEED CLASS (MPH)

DIRECTION	0-3	4-7	8-12	13-18	19-24	25-31	32-38	39-46	46	TOTAL	AVG SPEED
N	1.3	2.5	0.4	0.1						4.3	5.0
NNE	1.0	1.8	0.5	0.1						3.4	5.1
NE	1.3	1.6	0.3	0.1	#					3.3	4.4
ENE	0.7	1.1	0.1	#						1.9	4.3
E	0.9	1.3	0.2	#						2.4	4.5
ESE	0.8	1.6	0.3							2.7	4.7
SE	1.1	1.8	0.5	#						3.4	4.8
SSE	0.7	1.1	0.6	#	#					2.4	5.5
S	0.8	1.4	0.3	#						2.5	4.8
SSW	0.6	1.6	0.7	0.2	0.1					3.2	6.6
SW	1.0	2.7	1.6	0.8	0.2	0.1	#			6.4	8.1
WSW	0.9	3.2	2.9	1.4	0.1	0.1				8.6	8.5
W	1.3	5.1	4.1	0.7	#					11.2	7.5
WNW	0.9	4.1	7.6	4.1	1.3	0.2				18.2	10.6
NW	1.2	3.8	5.1	4.5	2.3	0.5				17.4	11.8
NNW	1.0	2.3	0.5	0.1	#					3.9	5.4
VAR	2.8	1.3								4.1	3.0
CALM	0.6									0.6	
TOTAL	18.9	38.3	25.7	12.1	4.0	0.9	#			100.0	7.9

# DENOTES LESS THAN 0.05%

Table 2.3-9

Percentage Frequency Distribution of 50-ft Wind Direction Versus Speed at HMS (1955-1970) (Continued)

SEPTEMBER
SPEED CLASS (MPH)

DIRECTION	0-3	4-7	8-12	13-18	19-24	25-31	32-38	39-46	46	TOTAL	AVG SPEED
N	1.9	2.4	0.9	0.3	#	#				5.5	5.3
NNE	1.5	1.8	1.0	0.4	0.1	#				4.8	6.4
NE	1.8	1.8	0.6	0.3	0.1	#				4.6	5.6
ENE	1.3	0.9	0.1	0.1						2.4	3.9
E	1.6	1.1	0.2	#						2.9	3.7
ESE	1.2	1.5	0.2							2.9	4.1
SE	1.4	2.1	0.4	#						3.9	4.6
SSE	0.9	1.3	0.5	0.1						2.8	5.3
S	0.9	1.3	0.3	0.1	#					2.6	5.2
SSW	0.8	1.6	0.5	0.2	0.1	0.1				3.3	7.0
SW	0.8	2.1	1.3	1.0	0.5	0.3	#			6.0	9.9
WSW	1.0	3.0	2.7	1.3	0.6	0.1	#			8.7	9.4
W	1.3	4.9	3.7	0.8	0.3	0.1				11.1	7.6
WNW	1.2	4.0	5.6	2.9	0.9	0.1				14.7	9.8
NW	1.4	3.6	4.9	3.3	1.4	0.2				14.8	10.5
NNW	1.3	2.6	0.9	0.2	#					5.0	5.7
VAR	2.0	0.6								2.6	2.6
CALM	1.2									1.2	
TOTAL	23.5	36.6	23.8	11.0	4.0	0.9				100.0	7.5

# DENOTES LESS THAN 0.05%

OCTOBER
SPEED CLASS (MPH)

DIRECTION	0-3	4-7	8-12	13-18	19-24	25-31	32-38	39-46	46	TOTAL	AVG SPEED
N	2.6	1.7	0.4	0.1						4.8	3.9
NNE	2.1	1.1	0.3	0.1						3.6	3.9
NE	2.4	0.8	0.2	0.1	#					3.5	3.5
ENE	1.4	0.7	0.1	#	#					2.2	3.6
E	1.8	0.9	0.1							2.8	3.1
ESE	1.8	1.4	0.1							3.3	3.6
SE	2.5	1.9	0.6	0.1						5.1	4.2
SSE	1.0	1.5	0.7	0.1	#					3.3	5.7
S	1.1	1.4	0.5	0.3	0.2	#				3.5	6.7
SSW	1.0	1.4	0.7	0.7	0.5	0.2	#	#		4.5	9.7
SW	1.0	2.0	1.5	1.4	1.0	0.4	#			7.3	11.3
WSW	1.0	2.8	3.0	1.6	0.6	0.1	#			9.1	9.5
W	1.7	4.6	3.6	0.7	0.1	#				10.7	7.1
WNW	1.7	4.7	5.0	1.4	0.4	#				13.2	8.1.
NW	2.4	4.4	4.0	1.6	0.4	0.1	#			12.9	8.0
NNW	2.1	2.5	0.6	0.1	#	#				5.3	4.7
VAR	1.6	0.1	#							1.7	1.8
CALM	2.7									2.7	
TOTAL	31.9	33.9	21.4	8.3	3.2	0.8	#	#		100.0	6.7

# DENOTES LESS THAN 0.05%

NOVEMBER
SPEED CLASS (MPH)

DIRECTION	0-3	4-7	8-12	13-18	19-24	25-31	32-38	39-46	46	TOTAL	AVG SPEED
N	2.7	1.3	0.4	0.2						4.6	4.0
NNE	2.2	0.7	0.4	0.2	#					3.5	4.0
NE	1.9	0.5	0.1	#						2.5	2.8
ENE	1.8	0.4	#							2.2	2.5
E	1.9	0.6	#							2.5	2.6
ESE	2.0	1.0	0.1							3.1	3.1
SE	2.5	1.4	0.3	0.1						4.3	3.9
SSE	1.4	1.2	0.4	0.2	0.1	#				3.3	5.3
S	1.7	1.2	0.5	0.5	0.3	#				4.2	6.8
SSW	1.4	1.2	0.8	0.9	0.7	0.2	0.1			5.3	9.9
SW	1.6	1.6	1.4	1.5	0.8	0.3	0.1	#		7.3	10.5
WSW	1.3	2.1	1.9	1.3	0.4	0.1	#	#		7.1	9.1
W	2.1	3.4	1.9	0.6	0.1	0.1	#			8.2	6.8
WNW	2.5	4.6	4.9	1.0	0.3	0.1				13.4	7.5
NW	3.6	5.9	4.7	0.7	0.1	0.1	#			15.1	6.6
NNW	3.0	2.8	1.0	0.2						7.0	4.6
VAR	1.4	0.1								1.5	1.6
CALM	4.7									4.7	
TOTAL	39.7	30.0	18.8	7.4	2.8	0.9	0.2	#		100.0	6.1

# DENOTES LESS THAN 0.05%

DECEMBER
SPEED CLASS (MPH)

DIRECTION	0-3	4-7	8-12	13-18	19-24	25-31	32-38	39-46	46	TOTAL	AVG SPEED
N	2.7	1.0	0.3	0.2						4.2	3.5
NNE	1.6	0.6	0.2	#						2.4	3.6
NE	1.7	0.5	#	#						2.2	2.6
ENE	1.5	0.5	#							2.0	2.4
E	1.6	0.6	0.1	#	#					2.3	2.9
ESE	1.9	0.7	0.2	0.1	#					2.9	3.6
SE	2.6	1.2	0.4	0.1	#					4.3	3.6
SSE	1.7	1.2	0.2	0.2	0.1					3.4	4.7
S	1.7	0.8	0.4	0.4	0.2	0.1	#			3.6	6.7
SSW	1.3	0.7	0.6	0.8	0.5	0.4	0.1	#		4.4	11.1
SW	1.5	1.3	1.2	1.4	1.0	0.5	0.1	#	#	7.0	11.8
WSW	1.6	1.8	1.7	1.1	0.4	0.1	#			6.7	8.6
W	2.1	2.7	1.5	0.5	0.1	#				6.9	6.0
WNW	2.9	5.7	5.3	0.8	0.1	#				14.8	6.9
NW	3.8	7.3	6.0	1.0	0.1					18.2	6.7
NNW	2.9	2.4	0.9	0.1						6.3	4.3
VAR	1.5	0.1								1.6	1.7
CALM	6.8									6.8	
TOTAL	41.4	29.1	19.0	6.7	2.5	1.1	0.2	#	#	100.0	5.9

# DENOTES LESS THAN 0.05%

Table 2.3-9

Percentage Frequency Distribution of 50-ft Wind Direction Versus Speed at HMS (1955-1970) (Continued)

COMPOSITE OF ALL MONTHS

	SPEED CLASS (MPH)										
DIRECTION	0-3	4-7	8-12	13-18	19-24	25-31	32-38	39-46	46	TOTAL	AVG SPEED
N	2.0	1.8	0.6	0.2	#	#				4.6	4.9
NNE	1.4	1.4	0.6	0.3	#	#				3.7	5.7
NE	1.6	1.2	0.4	0.2	#	#				3.4	4.9
ENE	1.0	0.8	0.2	#	#	#				2.0	4.1
E	1.2	1.0	0.2	#	#					2.4	3.9
ESE	1.2	1.1	0.2	#	#					2.5	4.0
SE	1.6	1.6	0.4	0.1	#	#				3.7	4.5
SSE	0.9	1.1	0.5	0.1	#	#				2.0	5.7
S	1.0	1.3	0.4	0.2	0.1	#	#	#		3.0	6.4
SSW	0.9	1.3	0.7	0.6	0.3	0.2	#	#		4.0	9.5
SW	1.0	2.0	1.6	1.4	0.8	0.3	0.1	#	#	7.2	10.9
WSW	1.0	2.5	2.7	1.6	0.5	0.2	#	#		8.5	9.9
W	1.4	3.9	3.2	1.0	0.2	#	#			9.7	7.7
WNW	1.5	4.5	6.1	2.9	0.9	0.1	#			16.0	9.7
NW	2.1	4.9	5.2	2.8	1.3	0.3	#			16.6	9.6
NNW	1.7	2.3	0.8	0.1	#	#				4.9	5.1
VAR	1.7	0.7	#							2.4	2.7
CALM	2.2									2.2	
TOTAL	25.4	33.4	23.8	11.5	4.1	1.1	0.1	#	#	100.0	7.6

# DENOTES LESS THAN 0.05%

Table 2.3-10

Percent Frequency of Occurrence of Wind Direction
at the Hanford Reservation*

	WIND DIRECTION																	
MONTH/YEAR/SITE/ELEVATION	NNE	NE	ENE	E	ESE	SE	SSE	S	SSW	SW	WSW	W	WNW	NW	NNW	N	VARI-ABLE	CALM
4/74 CGS 33'	2.64	3.06	0.42	0.83	1.53	3.19	7.50	8.89	13.06	7.78	5.69	8.75	17.08	9.31	4.17	3.19	0.97	0.00
4/74 CGS (temp) 23'	2.64	3.61	1.11	1.81	3.75	4.72	6.81	10.42	6.11	4.31	4.72	10.28	16.11	7.50	2.36	2.92	3.19	0.00
4/74 HMS 50'	1.53	2.36	1.25	1.53	1.94	2.64	2.50	1.81	3.61	6.81	15.28	13.19	22.08	17.08	2.78	1.53	1.67	0.42
April (1955-1970) HMS (hist) 50'	3.2	3.2	2.0	2.3	2.0	3.1	2.5	3.2	4.7	9.5	11.2	11.8	16.6	14.3	3.7	4.2	2.1	0.4
5/74 CGS 33'	2.15	1.75	1.21	1.88	2.02	2.42	8.06	12.37	14.25	6.99	9.27	10.62	12.90	6.32	3.09	1.61	2.02	0.00
5/74 CGS (temp) 23'	0.94	2.69	0.94	2.82	2.28	4.57	8.20	11.83	9.14	6.32	7.53	8.20	8.06	5.24	2.55	1.48	6.05	0.13
5/74 HMS 50'	1.88	1.34	0.81	1.75	3.36	1.88	1.75	2.15	4.70	8.47	14.92	14.25	21.24	13.31	1.75	1.88	3.90	0.67
May (1955-1970) HMS (hist) 50'	3.1	3.7	2.3	2.4	2.2	3.3	2.7	2.8	3.3	6.4	9.8	11.4	18.1	17.2	3.6	3.9	3.2	0.6
6/74 CGS 33'	2.50	2.92	4.31	3.33	3.61	5.14	7.22	7.64	7.08	4.03	3.89	7.22	9.31	7.36	3.61	2.50	0.69	0.00
6/74 CGS (temp) 23'	3.06	4.72	3.75	4.44	7.22	7.50	7.78	6.67	6.53	5.42	3.61	4.86	10.0	10.0	4.72	2.22	7.50	0.00
6/74 HMS 50'	1.94	2.92	2.22	2.50	3.75	4.03	2.64	2.36	3.06	4.44	7.22	6.25	24.03	19.58	4.72	2.36	5.56	0.42
June (1955-1970) HMS (hist) 50'	3.6	3.7	2.0	2.2	2.2	2.8	2.1	2.6	3.0	6.5	8.5	11.2	19.6	18.9	3.5	3.9	3.3	0.4
7/74 CGS 33'	2.42	3.23	2.42	4.03	3.36	5.38	7.66	9.41	7.26	6.72	4.70	6.59	8.47	9.01	5.51	4.70	4.30	0.00
7/74 CGS (temp) 23'	3.63	4.30	3.49	3.09	5.51	5.78	8.60	9.14	10.22	3.36	3.76	4.30	5.65	12.50	5.78	3.76	6.99	0.13
7/74 HMS 50'	2.82	1.88	2.96	2.55	3.90	3.76	2.69	3.76	2.96	5.11	12.50	12.90	16.53	11.96	2.96	2.42	8.33	0.00
July (1955-1970) HMS (hist) 50'	3.8	3.8	2.0	2.5	2.3	2.9	1.9	2.5	2.5	6.3	8.4	9.9	19.5	18.9	3.5	4.5	4.4	0.4
8/74 CGS 33'	6.45	5.65	2.02	2.42	2.82	4.30	8.47	10.08	8.87	4.44	3.76	3.49	9.81	9.01	6.59	7.66	2.42	0.00
8/74 CGS (temp) 23'	6.72	8.87	4.03	4.03	3.76	5.38	10.48	10.62	5.51	3.49	2.42	2.69	7.39	8.74	7.12	3.49	4.30	0.40
8/74 HMS 50'	5.65	3.49	2.55	2.42	2.69	2.55	2.55	2.96	3.49	3.36	7.12	10.62	16.80	16.13	5.65	4.97	6.18	0.81
August (1955-1970) HMS (hist) 50'	3.4	2.9	2.0	2.4	2.7	3.4	2.4	2.5	3.2	6.4	8.6	11.3	18.3	17.4	3.9	4.4	4.2	0.6
9/74 CGS 33'	9.58	5.42	5.56	3.33	3.75	2.92	2.92	8.19	5.28	4.03	2.36	5.00	7.78	9.03	8.19	12.92	2.64	0.00
9/73 CGS (temp) 23'	4.72	6.11	3.61	4.86	3.75	5.42	7.92	8.47	5.28	4.72	2.36	3.75	7.36	6.94	7.08	8.47	9.17	0.00
9/73 HMS 50'	7.36	4.86	1.67	3.75	2.50	2.50	2.64	2.92	3.61	4.58	8.61	6.81	15.28	15.97	7.22	4.03	3.06	2.64
September (1955-1970) HMS (hist) 50'	4.9	4.6	2.4	2.9	2.8	3.9	2.7	2.8	3.4	6.0	8.8	11.0	14.7	14.8	4.9	5.6	2.6	1.2
10/74 CGS 33'	5.65	5.78	6.59	3.23	2.28	4.84	6.05	6.85	5.65	3.49	3.76	4.97	8.60	7.12	8.06	8.60	2.69	0.13
10/73 CGS (temp) 23'	3.76	4.70	2.69	4.30	3.63	6.85	9.68	11.96	7.53	5.51	1.75	4.84	7.12	6.85	4.97	3.23	8.20	0.27
10/73 HMS 50'	2.42	3.76	2.15	1.75	3.23	3.63	2.96	3.23	5.65	10.89	11.16	9.27	14.78	11.42	4.84	2.82	1.48	4.57
October (1955-1970) HMS (hist) 50'	3.5	3.6	2.3	2.8	3.3	5.1	3.4	3.5	4.5	7.4	9.2	10.7	13.2	12.9	5.4	4.7	1.8	2.7

* For some months, when concurrent measurements are not available for all sites shown; previous year data is given.

Table 2.3-10

Percent Frequency of Occurrence of Wind Direction
at the Hanford Reservation* (Continued)

	WIND DIRECTION																	
MONTH/YEAR/SITE/ELEVATION	NNE	NE	ENE	E	ESE	SE	SSE	S	SSW	SW	WSW	W	WNW	NW	NNW	N	VARI-ABLE	CALM
11/74 CGS 33'	5.28	3.61	4.31	1.11	2.08	4.72	7.36	10.42	10.69	6.94	3.33	4.86	7.08	10.42	8.33	6.94	1.81	0.00
11/73 CGS (temp) 23'	2.22	4.86	1.81	1.53	4.44	8.19	9.72	8.19	5.42	2.22	2.22	5.69	16.25	8.06	3.75	2.92	3.61	0.28
11/73 HMS 50'	3.33	1.67	1.81	1.81	3.61	6.11	3.06	5.00	6.25	7.50	4.86	5.42	13.89	19.31	5.97	4.44	0.56	5.42
November (1955-1970) HMS (hist) 50'	3.4	2.6	2.3	2.5	3.1	4.4	3.3	4.2	5.2	7.4	7.1	8.4	13.4	15.1	7.0	4.6	1.4	4.6
12/74 CGS 33'	2.28	2.15	1.21	0.94	1.34	2.82	8.06	13.44	11.02	4.84	6.05	6.99	10.89	12.23	8.33	4.57	1.61	0.00
12/73 CGS (temp) 23'	2.28	5.38	2.28	2.82	3.76	7.53	9.95	10.62	5.24	3.09	2.02	4.30	9.41	10.48	4.84	2.82	7.93	0.67
12/73 HMS 50'	2.02	1.48	2.15	2.28	2.28	3.49	3.49	4.30	4.70	7.12	8.20	9.54	13.84	20.02	4.57	1.75	2.15	6.59
December (1955-1970) HMS (hist) 50'	2.5	2.3	1.9	2.3	2.8	4.2	3.4	3.5	4.4	7.1	6.8	6.9	14.8	18.2	6.3	4.2	1.6	6.8
1/75 CGS 33'	4.57	3.76	4.44	2.42	3.09	3.63	6.45	6.18	6.99	6.45	6.05	3.76	6.85	11.96	13.71	5.91	1.48	0.00
1/74 CGS (temp) 23'	2.28	1.88	1.08	1.88	3.09	4.97	7.12	13.17	17.34	8.20	3.23	3.23	5.51	6.32	3.49	1.88	4.70	1.61
1/74 HMS 50'	2.69	3.09	2.02	1.34	2.55	4.57	4.03	4.03	5.24	16.67	13.04	7.66	7.53	9.81	4.30	3.09	1.21	4.70
January (1955-1970) HMS (hist) 50'	3.4	2.9	1.9	2.4	2.8	4.7	3.1	3.6	4.9	6.7	6.0	6.1	14.2	19.5	6.4	4.6	1.4	5.4
2/75 CGS 33'	4.76	2.38	1.93	0.89	1.64	2.98	7.74	7.89	8.18	4.91	4.61	3.57	5.21	18.76	14.43	8.18	1.19	0.00
2/74 CGS (temp) 23'	1.04	1.79	1.34	1.64	4.32	7.44	9.08	13.54	13.39	6.25	7.14	5.21	8.33	5.65	2.38	1.34	8.93	0.19
2/74 HMS 50'	2.08	2.68	2.08	1.19	4.17	4.46	2.83	5.36	8.63	10.57	12.95	10.86	10.12	10.71	4.91	2.38	2.23	1.79
February (1955-1970) HMS (hist) 50'	4.4	3.5	1.9	2.1	2.2	3.4	2.7	2.9	4.2	7.5	7.4	9.3	15.4	18.4	5.8	5.0	1.5	2.4
3/75 CGS 33'	2.82	1.34	1.21	1.34	2.02	2.42	7.26	10.62	8.33	9.81	4.97	2.15	6.99	11.16	11.56	5.91	1.61	0.00
3/74 CGS (temp) 23'	1.61	2.55	2.02	2.82	1.61	6.59	6.72	10.08	10.08	7.66	4.84	5.65	6.72	6.72	4.57	3.23	9.41	1.08
3/74 HMS 50'	1.75	2.69	2.02	1.61	1.21	4.84	3.76	4.30	7.12	15.05	10.75	9.01	11.16	13.04	5.65	2.82	2.82	0.40
March (1955-1970) HMS (hist) 50'	4.5	3.5	1.7	2.0	2.3	3.7	2.8	3.8	5.4	9.9	10.4	9.6	14.4	13.7	5.0	5.1	1.5	0.7
April 1974-March 1975 CGS 33'	4.25	3.42	2.97	2.16	2.47	3.73	7.07	9.35	8.89	5.88	4.89	5.67	9.27	10.08	7.93	6.04	1.96	0.01
1955-1970 HMS (hist) 50'	3.7	3.4	2.0	2.4	2.6	3.7	2.8	3.2	4.1	7.2	8.5	9.8	16.0	16.6	4.9	4.5	2.4	2.2

* For some months, when concurrent measurements are not available for all sites shown; previous year data is given.

Table 2.3-11

Persistence of Wind Direction in One Sector (22.5 Degrees)
from 4/74 through 3/75 at 33-ft Level
(Stability Based On Temperature Difference)

DATE STARTED DAY	HOUR	WIND DIR	HOURS OF PERSISTENCE	HOURS EACH STABILITY		AVERAGE SPEED (MPH)
400	22	NW	14	0	V UNS	.00
				0	UNSTA	.00
				3	NEUTR	10.30
				11	M STA	11.08
				0	V STA	.00
				0	UNKNO	.00
171	10	S	10	1	V UNS	16.00
				7	UNSTA	18.14
				2	NEUTR	15.00
				0	M STA	.00
				0	V STA	.00
				0	UNKNO	.00
295	15	NNW	10	0	V UNS	.00
				1	UNSTA	19.57
				2	NEUTR	21.18
				7	M STA	9.98
				0	V STA	.00
				0	UNKNO	.00
327	14	NW	10	0	V UNS	.00
				0	UNSTA	.00
				5	NEUTR	3.81
				5	M STA	4.06
				0	V STA	.00
				0	UNKNO	.00
425	6	NNW	10	0	V UNS	.00
				1	UNSTA	5.53
				7	NEUTR	5.84
				2	M STA	6.81
				0	V STA	.00
				0	UNKNO	.00
134	7	SSW	9	0	V UNS	.00
				1	UNSTA	23.78
				8	NEUTR	19.54
				0	M STA	.00
				0	V STA	.00
				0	UNKNO	.00
219	17	WNW	9	0	V UNS	.00
				2	UNSTA	17.34
				2	NEUTR	22.97
				5	M STA	16.69
				0	V STA	.00
393	2	NW	9	0	V UNS	.00
				0	UNSTA	.00
				9	NEUTR	#999.0 (missing data)
				0	M STA	.00
				0	V STA	.00
				0	UNKNO	.00
404	2	NNW	9	0	V UNS	.00
				0	UNSTA	.00
				1	NEUTR	13.63
				8	M STA	11.18
				0	V STA	.00
				0	UNKNO	.00

Table 2.3-11

Persistence of Wind Direction in One Sector (22.5 Degrees) from 4/74 through 3/75 at 33-ft Level (Continued)
(Stability Based on Temperature Difference)

DATE STARTED DAY	HOUR	WIND DIR	HOURS OF PERSISTENCE	HOURS EACH STABILITY		AVERAGE SPEED (MPH)
407	5	SSW	9	0	V UNS	.00
				0	UNSTA	.00
				2	NEUTR	17.20
				7	M STA	20.64
				0	V STA	.00
				0	UNKNO	.00
102	13	WNW	8	0	V UNS	.00
				5	UNSTA	16.67
				1	NEUTR	19.07
				2	M STA	16.91
				0	V STA	.00
				0	UNKNO	.00
132	13	WNW	8	0	V UNS	.00
				6	UNSTA	22.17
				1	NEUTR	22.06
				1	M STA	17.06
				0	V STA	.00
				0	UNKNO	.00
244	11	NNE	8	0	V UNS	.00
				7	UNSTA	15.35
				1	NEUTR	12.87
				0	M STA	.00
				0	V STA	.00
				0	UNKNO	.00
271	16	NW	8	0	V UNS	.00
				1	UNSTA	18.52
				2	NEUTR	16.92
				5	M STA	11.63
				0	V STA	.00
				0	UNKNO	.00
363	10	S	8	0	V UNS	.00
				0	UNSTA	.00
				5	NEUTR	13.70
				3	M STA	13.80
				0	V STA	.00
				0	UNKNO	.00
396	21	NW	8	0	V UNS	.00
				0	UNSTA	.00
				4	NEUTR	9.10
				4	M STA	8.16
				0	V STA	.00
				0	UNKNO	.00
401	12	NNW	8	0	V UNS	.00
				0	UNSTA	.00
				5	NEUTR	12.80
				3	M STA	11.49
				0	V STA	.00
				0	UNKNO	.00
402	6	N	8	0	V UNS	.00
				0	UNSTA	.00
				7	NEUTR	9.04
				1	M STA	9.99
				0	V STA	.00
				0	UNKNO	.00
426	14	SW	8	0	V UNS	.00
				2	UNSTA	18.58
				3	NEUTR	16.88
				3	V STA	15.28
				0	V STA	.00
				0	UNKNO	.00
430	8	NNW	8	0	V UNS	.00
				6	UNSTA	10.54
				1	NEUTR	10.68
				1	M STA	7.82
				0	V STA	.00
				0	UNKNO	.00

Table 2.3-12

Persistence of Wind Direction in Two Sectors (45 Degrees)
from 4.74 through 3/75 at CGS for 33-ft Level
(Stability Based on Temperature Difference)

DATE STARTED DAY	HOUR	WIND DIRECTIONS		HOURS OF PERSISTENCE	HOURS EACH STABILITY		AVERAGE SPEED (MPH)
400	22	NW	NNW	26	0	V UNS	.00
					0	UNSTA	.00
					8	NEUTR	11.80
					15	M STA	11.05
					3	V STA	6.23
					0	UNKNO	.00
379	12	NW	NNW	23	0	V UNS	.00
					0	UNSTA	.00
					6	NEUTR	3.73
					17	M STA	3.78
					0	V STA	.00
					0	UNKNO	.00
399	23	NW	NNW	22	0	V UNS	.00
					0	UNSTA	.00
					7	NEUTR	15.79
					15	M STA	12.65
					0	V STA	.00
					0	UNKNO	.00
424	21	NW	NNW	20	0	V UNS	.00
					2	UNSTA	4.20
					8	NEUTR	5.88
					10	M STA	7.18
					0	V STA	.00
					0	UNKNO	.00
102	1	NNW	NW	19	0	V UNS	.00
					8	UNSTA	18.20
					2	NEUTR	28.03
					9	M STA	21.20
					0	V STA	.00
					0	UNKNO	.00
400	17	WNW	NW	19	0	V UNS	.00
					0	UNSTA	.00
					3	NEUTR	10.30
					16	M STA	11.44
					0	V STA	.00
					0	UNKNO	.00
244	5	N	NNE	18	0	V UNS	.00
					7	UNSTA	15.35
					7	NEUTR	15.01
					4	M STA	9.66
					0	V STA	.00
					0	UNKNO	.00
404	2	NNW	N	18	0	V UNS	.00
					0	UNSTA	.00
					9	NEUTR	11.56
					9	M STA	10.83
					0	V STA	.00
					0	UNKNO	.00
431	10	NW	NNW	18	0	V UNS	.00
					5	UNSTA	17.79
					5	NEUTR	17.77
					8	M STA	8.45
					0	V STA	.00
					0	UNKNO	.00
171	3	S	SSW	17	1	V UNS	16.00
					8	UNSTA	18.37
					5	NEUTR	16.60
					3	M STA	13.33
					0	V STA	.00
					0	UNKNO	.00
224	17	NNW	NW	17	0	V UNS	.00
					4	UNSTA	10.07
					3	NEUTR	14.39
					10	M STA	12.00
					0	V STA	.00
					0	UNKNO	.00

Table 2.3-12

Persistence of Wind Direction in Two Sectors (45 Degrees) from 4.74 through 3/75 at CGS for 33-ft Level (Continued)
(Stability Based on Temperature Difference)

DATE STARTED DAY	HOUR	WIND DIRECTIONS		HOURS OF PERSISTENCE	HOURS EACH STABILITY		AVERAGE SPEED (MPH)
401	21	NNW	N	17	0	V UNS	.00
					0	UNSTA	.00
					7	NEUTR	9.04
					3	M STA	8.95
					7	V STA	6.78
					0	UNKNO	.00
406	21	SSW	SW	17	0	V UNS	.00
					0	UNSTA	.00
					2	NEUTR	17.20
					15	M STA	21.52
					0	V STA	.00
					0	UNKNO	.00
438	1	SSE	S	17	0	V UNS	.00
					2	UNSTA	7.67
					2	NEUTR	5.47
					7	M STA	7.21
					6	V STA	8.80
					0	UNKNO	.00
396	17	WNW	NW	16	0	V UNS	.00
					0	UNSTA	.00
					10	NEUTR	8.80
					6	M STA	7.94
					0	V STA	.00
					0	UNKNO	.00
423	8	NW	NNW	16	0	V UNS	.00
					0	UNSTA	.00
					10	NEUTR	7.61
					6	M STA	5.58
					0	V STA	.00
					0	UNKNO	.00
98	11	WNW	NW	15	0	V UNS	.00
					3	UNSTA	15.67
					4	NEUTR	14.00
					8	M STA	11.62
					0	V STA	.00
					0	UNKNO	.00
253	15	WNW	NW	15	0	V UNS	.00
					0	UNSTA	.00
					2	NEUTR	16.41
					9	M STA	11.59
					4	V STA	7.27
					0	UNKNO	.00
293	11	W	WNW	15	0	V UNS	.00
					4	UNSTA	16.25
					3	NEUTR	18.27
					8	M STA	9.39
					0	V STA	.00
					0	UNKNO	.00
355	6	WSW	W	15	0	V UNS	.00
					0	UNSTA	.00
					7	NEUTR	25.65
					8	M STA	15.14
					0	V STA	.00
					0	UNKNO	.00

Table 2.3-12a

Longest Persistence of Wind Direction in One (22.5 Degrees) and Two (45 Degrees) Sectors
During First and Second Annual Cycles at 33-ft Level
(Stability Based on Temperature Difference)

First Annual Cycle (April '74 – March '75)						Second Annual Cycle (April '75 – March '76)					
MONTH	WIND DIRECTION	HOURS OF PERSISTENCE	HOURS OF EACH STABILITY		AVERAGE WIND SPEED	MONTH	WIND DIRECTION	HOURS OF PERSISTENCE	HOURS OF EACH STABILITY		AVERAGE WIND SPEED
January	NW	14	0	V UNS	.00	February	NNE	33	0	V UNS	.00
			0	UNSTA	.00				3	UNSTA	30.22
			3	NEUTR	10.30				10	NEUTR	29.04
			11	M STA	11.08				20	M STA	23.15
			0	V STA	.00				0	V STA	.00
			0	UNKNO	.00				0	UNKNO	.00
January	NW, NNW	26	0	V UNS	.00	January	N, NNE	35	0	V UNS	.00
			0	UNSTA	.00				3	UNSTA	30.22
			8	NEUTR	11.86				10	NEUTR	29.04
			15	M STA	11.05				22	M STA	21.84
			3	V STA	6.23				0	V STA	.00
			0	UNKNO	.00				0	UNKNO	.00

Table 2.3-13

Percent Frequency of Occurrence of Wind Speed
at the Hanford Reservation (1)

Month/Year/Site/Elevations	Wind Speed Range, mph (2) Calm	1-3	4-7	8-12	13-18	19-24	25-Up	Average Speed (mph)
4/74 CGS 33'	0.00	9.58	31.11	24.17	18.19	6.25	1.81	9.8
4/74 CGS (temp) 23'	0.00	13.19	37.50	23.47	17.78	4.72	0.42	8.7
4/74 HMS 50'	0.42	9.72	26.11	33.33	19.72	7.64	3.06	10.3
April (1955-1970) HMS (hist) 50'		16.8	31.6	26.6	16.2	6.6	2.2	9.0
5/74 CGS 33'	0.00	12.50	36.16	33.33	12.77	3.63	0.54	8.4
5/74 CGS (temp) 23'	0.13	14.11	38.17	28.23	11.96	2.55	0.67	7.9
5/74 HMS 50'	0.67	12.63	30.11	32.66	18.15	5.38	0.40	9.0
May (1955-1970) HMS (hist) 50'		16.6	33.3	27.9	15.1	6.0	1.1	8.8
6/74 CGS 33'	0.00	11.25	44.03	23.89	9.72	3.61	1.11	8.5
6/74 CGS (temp) 23'	0.00	21.67	47.64	18.06	9.03	3.06	0.56	6.9
6/74 HMS 50'	0.42	13.61	35.42	26.11	15.69	7.64	1.11	9.0
June (1955-1970) HMS (hist) 50'		11.7	34.6	28.1	17.4	6.8	1.4	9.2
7/74 CGS 33'	0.00	16.13	43.95	24.33	8.74	1.61	0.40	7.2
7/74 CGS (temp) 23'	0.13	25.40	45.30	19.89	8.06	1.21	0.00	6.4
7/74 HMS 50'	0.00	16.26	38.44	27.28	13.44	4.57	0.00	8.1
July (1955-1970) HMS (hist) 50'		15.0	37.8	26.2	14.2	5.8	1.0	8.6
8/74 CGS 33'	0.00	21.91	46.37	19.35	7.12	3.36	0.13	6.8
8/74 CGS (temp) 23'	0.40	27.82	46.24	17.20	6.85	1.21	0.00	6.0
8/74 HMS 50'	0.81	16.53	43.28	26.21	7.53	5.11	0.54	7.5
August (1955-1970) HMS (hist) 50'		18.9	38.2	25.6	12.3	4.2	0.8	8.0
9/74 CGS 33'	0.00	27.78	38.06	22.50	8.75	1.39	0.42	6.5
9/73 CGS (temp) 23'	0.00	26.67	42.08	22.50	7.50	1.25	0.00	6.2
9/73 HMS 50'	2.64	20.42	36.25	28.33	8.75	3.19	0.42	7.1
September (1955-1970) HMS (hist) 50'		23.6	36.8	23.8	10.9	4.1	0.8	7.5

(1) For some months, when, concurrent measurements are not available for all sites shown; previous year data is given.

(2) HMS (hist) 50' calm values are included in the 1-3 mph range group.

Table 2.3-13

Percent Frequency of Occurrence of Wind Speed
at the Hanford Reservation (1) (Continued)

Month/Year/Site/Elevation	Calm	1-3	4-7	8-12	13-18	19-24	25-Up	Average Speed (mph)
10/74 CGS 33'	0.13	44.49	34.27	11.16	3.36	0.94	0.00	4.8
10/73 CGS (temp) 23'	0.27	30.91	40.99	16.80	8.87	2.15	0.00	6.2
10/73 HMS 50'	4.57	25.81	34.95	23.39	7.53	3.23	0.54	6.7
October (1955-1970) RMS (hist) 50'		32.1	34.0	21.3	8.3	3.3	1.0	6.7
11/74 CGS 33'	0.00	34.72	39.58	16.11	5.97	1.53	0.00	5.8
11/73 CGS (temp) 23'	0.28	17.92	37.08	21.53	7.78	2.36	0.00	7.1
11/73 HMS 50'	5.42	19.86	33.89	26.67	6.81	5.28	2.08	7.5
November (1955-1970) HMS (hist) 50'		39.7	30.1	18.9	7.5	2.7	1.1	6.2
12/74 CGS 33'	0.00	31.05	37.23	21.51	6.05	1.61	1.21	6.4
12/73 CGS (temp) 23'	0.67	41.53	31.72	15.86	8.74	1.21	0.27	5.7
12/73 HMS 50'	6.59	25.13	31.05	23.79	9.95	3.09	0.40	6.7
December (1955-1970) HMS (hist) 50'		41.4	29.2	18.9	6.7	2.5	1.3	6.0
1/75 CGS 33'	0.00	29.44	36.83	19.76	5.38	2.02	0.67	6.4
1/74 CGS (temp) 23'	2.02	29.97	24.46	15.46	16.40	7.80	3.90	8.7
1/74 HMS 50'	4.70	21.10	26.48	21.24	13.31	7.66	5.51	9.3
January (1955-1970) HMS (hist) 50'		38.8	30.2	19.5	7.6	2.7	1.2	6.4
2/75 CGS 33'	0.00	22.47	36.90	23.36	9.82	5.21	1.49	7.8
2/74 CGS (temp) 23'	1.19	26.64	29.17	22.17	15.03	4.46	1.34	7.6
2/74 HMS 50'	1.79	20.09	33.63	23.66	15.63	4.61	0.60	8.0
February (1955-1970) HMS (hist) 50'		30.8	31.0	23.9	9.3	3.2	1.7	7.0
3/75 CGS 33'	0.00	13.04	31.85	27.02	14.11	4.44	1.08	8.7
3/74 CGS (temp) 23'	1.08	28.90	31.32	18.68	12.77	3.36	3.36	7.8
3/74 HMS 50'	0.40	16.94	33.33	25.81	13.04	7.66	2.82	9.1
March (1955-1970) HMS (hist) 50'		20.0	32.6	26.1	13.5	5.4	2.4	8.4
April 1974 – March 1975 CGS 33'	0.01	22.89	38.04	22.20	9.14	2.95	0.73	7.2
1955-1970 HMS (hist) 50'		25.4	33.3	23.9	11.6	4.4	1.4	7.6

Table 2.3-14

Diurnal Variation of 33-ft Elevation Dry Bulb Temperature (°F) at CGS and Monthly Average Dry Bulb Temperature (°F) at the Hanford Reservation

	Month/Year												
Hour	April 1974	May 1974	June 1974	July 1974	August 1974	September 1974	October 1974	November 1974	December 1974	January 1975	February 1975	March 1975	Annual Average (April 1974 – March 1975)
01	46.7	51.0	63.7	66.5	66.8	58.2	45.6	40.3	35.3	30.9	30.6	37.5	47.9
02	46.1	49.8	62.1	64.5	64.6	57.1	44.7	40.1	35.3	30.8	30.5	36.6	46.9
03	44.9	48.3	60.3	62.2	63.0	56.3	43.3	39.6	35.1	30.4	30.1	35.9	45.9
04	44.4	46.9	58.1	60.8	61.2	55.3	42.6	39.5	35.0	30.6	30.2	35.0	45.1
05	43.3	45.8	57.5	59.7	60.0	54.1	41.3	39.0	34.9	30.1	30.1	34.9	44.3
06	43.6	47.0	59.6	61.0	59.6	53.0	40.8	38.7	34.1	30.0	29.8	34.7	44.4
07	45.3	50.9	63.8	65.3	63.6	53.9	40.4	38.3	33.8	29.4	29.6	35.1	45.8
08	49.2	54.4	68.0	69.3	68.8	58.9	43.4	38.3	33.8	29.5	29.3	37.4	48.4
09	51.8	56.8	72.7	73.0	72.9	64.8	48.3	39.9	34.4	30.3	31.3	40.6	51.2
10	54.2	59.0	75.3	75.1	76.4	68.6	52.7	41.6	35.8	31.7	33.9	42.9	54.3
11	56.2	61.3	78.0	77.3	79.1	72.0	56.4	43.8	37.9	33.0	35.6	45.2	56.2
12	57.9	63.1	80.5	79.4	81.6	75.2	59.5	45.4	39.6	34.9	37.6	46.9	58.4
13	59.3	64.9	82.3	81.3	84.0	77.8	62.0	46.7	41.0	35.7	38.6	48.6	60.1
14	60.5	66.3	83.8	83.2	86.2	79.8	63.7	47.4	41.7	36.5	39.3	49.4	61.6
15	60.9	67.5	85.1	84.7	87.5	81.0	64.8	47.6	41.5	37.2	39.7	50.3	62.4
16	60.9	67.7	84.6	85.2	88.4	81.6	65.1	46.9	40.5	36.7	39.5	50.8	62.3
17	60.3	67.4	85.1	85.2	88.4	81.2	63.7	45.0	38.8	35.2	38.7	50.0	61.7
18	58.8	66.2	84.1	84.7	87.1	78.4	60.0	43.5	37.7	33.9	36.8	47.9	60.4
19	56.1	63.9	81.9	82.7	83.7	73.6	56.4	42.7	36.8	32.9	35.3	44.9	57.7
20	53.6	60.3	77.8	78.7	79.6	69.4	53.5	42.1	36.8	32.1	34.4	42.7	55.2
21	51.8	57.7	73.7	75.5	75.7	67.1	51.3	41.6	36.8	31.5	33.8	41.2	53.3
22	50.3	56.0	70.7	73.0	73.6	64.5	49.4	41.0	36.1	31.1	32.8	40.1	51.7
23	48.9	54.2	68.0	70.8	71.0	62.3	48.2	40.2	35.2	31.0	32.4	39.2	50.2
24	47.7	52.7	66.0	68.9	69.0	60.4	46.4	40.0	35.1	30.8	31.6	38.1	49.0
Monthly Average Dry Bulb Temperature (°F)* (Site, Elevation)													
CGS 33'	52.2	57.4	72.5	73.6	74.7	66.9	51.7	42.1	36.8	32.3	33.8	41.9	53.1
CGS 7'	52.7	58.3	73.0	74.3	75.0	66.3	50.6	41.9	36.1	32.2	33.9	42.2	53.1
CGS (temp) 3'	53.3	59.6	74.2	75.3	76.3	(65.0)	(51.2)	(39.7)	(37.8)	(29.0)	(40.7)	(45.4)	Not Computed
HMS 3'	52.5	57.9	73.3	74.8	76.3	68.3	52.0	42.1	35.7	32.0	33.6	42.0	53.4
1950-1970 HMS (hist) 3'	52.5	61.8	69.9	77.5	75.3	67.0	53.2	40.1	33.4	30.3	37.5	44.0	

*For some months, when concurrent measurements are not available for all sites shown, former year data is given in parentheses.

Table 2.3-15

Diurnal Variation of 33-ft Elevation Wet Bulb Temperature (°F) at CGS and Monthly Average Wet Bulb Temperature (°F) at the Hanford Reservation

	Month/Year												
Hour	April 1974	May 1974	June 1974	July 1974	August 1974	September 1974	October 1974	November 1974	December 1974	January 1975	February 1975	March 1975	Annual Average (April 1974 – March 1975)
01	41.9	44.4	52.1	54.7	54.9	49.1	40.7	38.0	33.5	29.0	28.9	34.0	41.8
02	41.5	43.8	51.6	54.1	54.1	48.6	40.1	38.0	33.6	29.0	28.7	33.4	41.4
03	40.9	43.3	50.9	53.1	53.5	48.0	39.3	37.6	33.5	28.7	28.5	32.9	40.9
04	40.7	42.6	50.1	52.6	52.8	47.6	38.9	37.6	33.4	28.9	28.4	32.3	40.6
05	40.2	41.9	50.0	52.3	52.5	47.0	38.0	37.3	33.2	28.5	28.3	32.2	40.2
06	40.5	42.7	51.2	53.4	52.3	46.4	37.8	37.1	32.7	28.4	28.0	32.1	40.3
07	41.9	44.9	53.3	55.4	54.5	47.1	37.5	36.8	32.4	27.9	27.8	32.4	41.0
08	44.2	46.1	54.9	56.9	56.8	49.7	39.5	36.9	32.2	27.8	27.6	34.3	42.3
09	45.5	47.5	56.8	57.9	58.2	52.6	42.7	38.2	32.6	28.4	29.5	36.1	43.8
10	46.6	48.1	57.7	58.5	59.7	54.2	44.9	39.3	34.0	29.6	31.2	37.1	45.3
11	47.1	49.1	58.8	59.0	60.6	55..4	46.7	40.8	35.4	30.6	32.1	38.3	46.1
12	47.8	49.7	59.6	59.7	61.2	56.5	48.0	41.6	36.4	31.8	33.2	39.0	47.0
13	48.2	50.3	60.0	60.2	61.7	57.4	49.1	42.3	37.3	32.3	33.9	39.5	47.7
14	48.6	50.7	60.3	60.4	62.2	57.9	49.7	42.6	37.6	32.8	34.2	40.0	48.2
15	48.7	51.0	60.7	60.9	62.4	58.2	50.2	42.8	37.6	33.2	34.5	40.4	48.4
16	48.6	50.9	60.1	61.1	62.6	58.3	50.3	42.4	36.9	32.9	34.4	40.6	48.3
17	48.5	50.8	60.5	61.0	62.6	58.0	49.8	41.4	35.8	31.9	34.0	40.1	48.0
18	48.0	50.4	60.3	60.8	62.0	57.0	48.4	40.5	35.1	30.9	32.9	39.2	47.2
19	46.8	49.7	59.6	60.1	60.9	55.4	46.4	40.0	34.4	30.4	32.0	37.8	46.2
20	45.8	48.5	58.4	59.0	59.6	53.6	44.8	39.6	34.4	29.7	31.4	36.8	45.2
21	44.8	47.4	56.5	58.0	58.0	52.4	43.4	39.0	34.4	29.4	31.1	35.9	44.3
22	43.8	46.6	54.9	57.2	57.3	51.4	42.4	38.5	34.1	29.0	30.5	35.2	43.5
23	43.1	45.8	54.1	56.2	56.6	50.5	41.8	37.8	33.5	29.0	30.3	34.6	42.8
24	42.5	45.1	53.1	55.6	55.8	49.7	41.1	37.7	33.5	28.8	29.6	34.0	42.3
Monthly Average Wet Bulb Temperature (°F)* (Site, Elevation)													
CGS 33'	44.7	47.2	56.0	57.4	58.0	52.6	43.8	39.3	34.5	30.0	30.9	36.2	44.3
CGS (temp) 3'	45.9	49.8	60.0	61.0	62.6	(54.6)	(45.5)	(37.8)	(36.4)	(26.4)	(36.6)	(39.3)	Not Calculated
HMS 3'	43.9	46.5	54.5	56.3	57.0	52.0	42.0	38.0	33.0	30.0	31.0	36.0	43.4
1950-1970 HMS (hist) 3'	42.8	49.1	54.5	57.9	57.3	52.6	45.4	36.4	31.2	27.9	33.6	37.3	

*For some months, when concurrent measurements are not available for all sites shown, former year data is given in parentheses.

Table 2.3-16

Diurnal Variation of 33 ft Elevation Dew Point Temperature (°F) at CGS and Monthly Average Dew Point Temperature (°F) at the Hanford Reservation

	Month/Year												
Hour	April 1974	May 1974	June 1974	July 1974	August 1974	September 1974	October 1974	November 1974	December 1974	January 1975	February 1975	March 1975	Annual Average (April 1974 – March 1975)
01	36.5	37.3	42.0	45.1	45.4	40.5	35.0	35.4	31.2	26.0	26.1	28.6	35.8
02	36.5	37.5	42.5	45.4	45.6	40.6	34.6	35.5	31.4	26.1	26.0	28.6	35.9
03	36.6	37.8	42.7	45.5	45.8	39.9	34.4	35.4	31.4	25.9	25.9	28.3	35.9
04	36.8	37.9	43.1	45.7	45.9	40.1	34.6	35.6	31.4	26.0	25.4	28.4	36.0
05	36.7	37.7	43.3	46.2	46.3	40.1	34.0	35.4	31.0	26.0	25.4	28.4	35.9
06	37.0	38.1	44.1	47.2	46.4	39.8	34.2	35.3	30.8	25.8	25.2	28.2	36.1
07	38.3	38.6	44.6	47.5	47.3	40.4	34.0	35.1	30.5	25.5	24.9	28.5	36.3
08	38.8	37.3	44.3	47.5	47.8	41.0	35.0	35.2	30.0	25.1	24.9	30.0	36.5
09	38.8	37.8	44.4	46.7	47.3	41.8	36.3	36.4	30.3	25.4	26.8	29.6	36.8
10	38.8	37.2	44.2	46.0	47.7	41.7	36.3	36.7	31.7	26.4	27.1	28.8	37.1
11	37.8	36.7	44.2	45.7	47.4	41.4	36.2	37.4	32.2	26.9	26.9	28.3	36.8
12	37.3	36.2	43.8	45.3	46.7	40.9	36.0	37.5	32.3	27.0	26.8	27.6	36.5
13	36.8	35.5	43.3	44.4	46.0	40.4	35.6	37.4	32.5	27.2	27.0	27.2	36.1
14	36.4	35.1	42.6	43.3	45.3	39.7	35.3	37.3	32.1	27.5	27.0	26.6	35.7
15	35.9	34.6	42.3	43.1	44.5	39.4	35.1	37.7	32.4	27.4	27.0	26.3	35.5
16	35.8	34.0	41.5	43.1	44.0	39.0	35.1	37.4	32.1	27.4	27.2	26.3	35.2
17	36.0	34.1	41.9	42.7	44.0	38.5	35.5	37.4	31.8	27.0	27.2	25.9	35.2
18	36.6	34.5	42.4	42.9	43.7	38.6	36.1	37.1	31.5	26.4	27.1	26.7	35.4
19	37.0	35.2	42.8	42.6	44.1	39.4	35.3	37.0	31.1	25.9	27.2	27.6	35.5
20	37.3	36.3	43.5	43.5	44.5	39.2	34.8	36.7	31.0	26.0	27.1	28.3	35.7
21	37.1	36.6	42.7	44.4	44.4	38.8	34.0	36.2	31.3	25.8	27.2	28.3	35.6
22	36.8	36.8	41.7	44.7	44.6	38.9	33.8	35.5	31.2	25.6	27.1	27.9	35.4
23	36.7	37.1	42.4	44.5	45.2	39.2	34.2	35.1	31.1	25.6	27.2	27.9	35.6
24	36.6	37.1	42.1	44.9	45.3	39.5	34.7	35.0	31.2		26.6	27.9	35.6
Monthly Average Dew Point Temperature (°F) (Site/Elevation)													
CGS 33'	36.6	36.6	43.0	44.9	45.6	39.9	35.0	36.3	31.4	26.3	26.5	27.9	35.9
HMS 3'	33.3	34.0	38.2	41.0	43.2	38.9	31.0	33.9	29.2	26.0	25.5	26.0	33.4
1950-1970 HMS (hist) 3'	30.4	36.0	41.2	42.3	42.8	39.5	36.9	31.1	27.5	23.2	27.4	27.3	

Table 2.3-17

Frequency of Occurrence, Dry Bulb Temperature (°F) Versus Time of Day from 4/74 through 3/75 for 33-ft Level

		TIME OF DAY																							
		1	2	3	4	5	6	7	8	9	10	11	12	13	14	15	16	17	18	19	20	21	22	23	24	TOTAL
	-20	0	0	0	0	0	0	0	0	0	0	0	0	0	0	0	0	0	0	0	0	0	0	0	0	0
-20	-15	0	0	0	0	0	0	0	0	0	0	0	0	0	0	0	0	0	0	0	0	0	0	0	0	0
-15	-10	0	0	0	0	0	0	0	0	0	0	0	0	0	0	0	0	0	0	0	0	0	0	0	0	0
-10	-5	0	0	0	0	0	0	0	0	0	0	0	0	0	0	0	0	0	0	0	0	0	0	0	0	0
-5	0	0	0	0	0	0	0	0	0	0	0	0	0	0	0	0	0	0	0	0	0	0	0	0	0	0
0	5	0	0	0	0	0	0	0	0	0	0	0	0	0	0	0	0	0	0	0	0	0	0	0	0	0
5	10	0	0	0	0	0	0	0	0	0	0	0	0	0	0	0	0	0	0	0	0	0	0	0	0	0
10	15	1	1	0	0	0	0	0	0	0	0	0	0	0	0	0	0	0	0	0	0	0	1	1	1	5
15	20	2	2	3	3	7	5	7	8	4	3	3	2	1	1	1	1	1	1	1	2	3	3	3	2	69
20	25	11	11	13	13	14	13	17	14	10	7	5	4	4	3	3	3	4	6	7	9	9	9	9	10	208
25	30	22	26	27	29	30	37	28	27	25	17	13	9	9	9	9	8	9	11	10	8	9	11	13	20	416
30	35	44	46	43	44	42	41	41	31	26	26	25	21	12	14	11	14	20	19	29	37	41	40	47	45	759
35	40	42	39	45	46	48	44	46	39	24	27	31	30	32	21	23	26	28	32	37	35	34	45	40	38	852
40	45	40	45	48	54	57	57	45	36	35	28	28	31	28	37	36	34	26	34	35	35	38	33	43	46	929
45	50	51	52	48	46	48	43	42	38	38	37	35	32	34	29	29	29	41	36	33	29	34	39	37	39	919
50	55	33	30	34	40	31	38	28	28	34	35	33	32	32	33	36	39	25	23	26	41	40	34	32	35	792
55	60	31	33	32	31	33	28	34	30	17	24	33	34	33	30	25	21	24	30	31	27	27	26	29	29	692
60	65	27	29	32	32	29	30	28	28	24	20	20	27	22	22	24	24	24	23	21	19	21	33	28	26	613
65	70	25	26	25	21	20	23	25	28	30	31	25	19	27	32	26	24	24	17	25	27	29	23	24	35	611
70	75	26	20	11	3	2	2	18	22	18	33	31	26	27	24	26	27	25	29	16	30	23	26	30	20	515
75	80	7	2	1	0	0	0	2	17	16	18	29	37	20	22	26	24	21	19	31	17	27	23	20	12	391
80	85	0	0	0	0	0	0	0	1	16	15	15	18	37	34	20	17	22	27	16	22	19	14	5	4	302
85	90	0	0	0	0	0	0	0	0	1	10	16	19	12	17	31	30	26	19	23	16	8	2	1	0	231
90	95	0	0	0	0	0	0	0	0	0	1	5	9	20	20	16	21	20	18	13	8	0	0	0	0	151
95	100	0	0	0	0	0	0	0	0	0	0	0	1	3	9	14	14	16	13	7	0	0	0	0	0	77
100	105	0	0	0	0	0	0	0	0	0	0	0	0	0	0	2	3	3	2	1	0	0	0	0	0	11
105	110	0	0	0	0	0	0	0	0	0	0	0	0	0	0	0	0	0	0	0	0	0	0	0	0	0
110		0	0	0	0	0	0	0	0	0	0	0	0	0	0	0	0	0	0	0	0	0	0	0	0	0
UNKNO		3	3	3	3	4	4	4	18	47	33	18	14	12	8	7	6	6	6	3	3	3	3	3	3	217
TOTAL		365	365	365	365	365	365	365	365	365	365	365	365	365	365	365	365	365	365	365	365	365	365	365	365	8760

Table 2.3-18

Frequency of Occurrence, Wet Bulb Temperature (°F) Versus Time of Day from 4/74 through 3/75 for 33-ft Level

		TIME OF DAY																							
		1	2	3	4	5	6	7	8	9	10	11	12	13	14	15	16	17	18	19	20	21	22	23	24	TOTAL
	-20	0	0	0	0	0	0	0	0	0	0	0	0	0	0	0	0	0	0	0	0	0	0	0	0	0
-20	-15	0	0	0	0	0	0	0	0	0	0	0	0	0	0	0	0	0	0	0	0	0	0	0	0	0
-15	-10	0	0	0	0	0	0	0	0	0	0	0	0	0	0	0	0	0	0	0	0	0	0	0	0	0
-10	-5	0	0	0	0	0	0	0	0	0	0	0	0	0	0	0	0	0	0	0	0	0	0	0	0	0
-5	0	0	0	0	0	0	0	0	0	0	0	0	0	0	0	0	0	0	0	0	0	0	0	0	0	0
0	5	0	0	0	0	0	0	0	0	0	0	0	0	0	0	0	0	0	0	0	0	0	0	0	0	0
5	10	0	0	0	0	0	0	0	0	0	0	0	0	0	0	0	0	0	0	0	0	0	0	0	0	0
10	15	2	2	2	1	1	1	1	2	1	1	1	0	0	0	0	0	0	1	1	1	1	2	2	2	25
15	20	1	2	4	7	9	8	9	8	5	3	3	3	3	3	2	2	2	1	1	3	4	2	2	1	88
20	25	14	15	18	14	14	16	18	15	9	8	8	6	6	6	6	5	7	8	10	9	8	10	9	12	251
25	30	35	33	35	42	41	43	41	34	30	24	14	10	7	7	7	10	11	14	18	18	23	26	35	39	597
30	35	44	51	46	47	50	45	42	37	32	33	39	43	33	26	24	28	31	35	41	48	47	55	47	44	968
35	40	54	51	58	57	60	67	60	51	44	41	45	39	50	49	51	50	50	52	48	46	48	44	56	49	1220
40	45	73	73	65	65	61	56	53	55	52	51	52	50	45	53	51	51	48	44	48	50	62	56	57	65	1336
45	50	43	44	52	54	51	47	51	47	39	49	51	54	52	50	52	48	47	49	52	55	43	52	44	52	1178
50	55	48	50	49	48	51	51	38	39	43	42	39	44	49	49	52	51	51	43	42	49	55	48	49	44	1124
55	60	39	33	27	23	18	23	39	41	36	38	49	50	50	52	47	46	44	51	46	39	45	46	48	44	974
60	65	8	6	5	3	4	3	8	18	23	33	39	43	46	47	45	44	45	44	41	35	22	19	11	9	601
65	70	0	1	0	0	0	0	0	0	3	5	6	8	12	15	21	24	23	17	14	9	4	1	1	0	164
70	75	0	0	0	0	0	0	0	0	0	0	0	0	0	0	0	0	0	0	0	0	0	0	0	0	0
75	80	0	0	0	0	0	0	0	0	0	0	0	0	0	0	0	0	0	0	0	0	0	0	0	0	0
80		0	0	0	0	0	0	0	0	0	0	0	0	0	0	0	0	0	0	0	0	0	0	0	0	0
UNKNO		4	4	4	4	5	5	5	18	48	37	19	15	12	8	7	6	6	6	3	3	3	4	4	4	234
TOTAL		365	365	365	365	365	365	365	365	365	365	365	365	365	365	365	365	365	365	365	365	365	365	365	365	8760

Table 2.3-19

Frequency of Occurrence, Dew Point Temperature (°F) Versus Time of Day from 4/74 through 3/75 for 33-ft Level

		TIME OF DAY																								
		1	2	3	4	5	6	7	8	9	10	11	12	13	14	15	16	17	18	19	20	21	22	23	24	TOTAL
	-40	0	0	0	0	0	0	0	0	0	0	0	0	0	0	0	0	0	0	0	0	0	0	0	0	0
-40	-35	0	0	0	0	0	0	0	0	0	0	0	0	0	0	0	0	0	0	0	0	0	0	0	0	0
-35	-30	0	0	0	0	0	0	0	0	0	0	0	0	0	0	0	0	0	0	0	0	0	0	0	0	0
-30	-25	0	0	0	0	0	0	0	0	0	0	0	0	0	0	0	0	0	0	0	0	0	0	0	0	0
-25	-20	0	0	0	0	0	0	0	0	0	0	0	0	0	0	0	0	0	0	0	0	0	0	0	0	0
-20	-15	0	0	0	0	0	0	0	0	0	0	0	0	0	0	0	0	0	0	0	0	0	0	0	0	0
-15	-10	0	0	0	0	0	0	0	0	0	0	0	0	0	0	0	0	0	0	0	0	0	0	0	0	0
-10	-5	0	0	0	0	0	0	0	0	0	0	0	0	0	0	0	0	0	0	0	0	0	0	0	0	0
-5	0	0	0	0	0	0	0	0	0	0	0	0	0	0	0	0	0	0	0	0	0	0	0	0	0	0
0	5	0	0	0	0	0	0	0	1	1	1	1	1	1	1	1	1	1	0	0	0	0	0	0	0	10
5	10	1	2	1	2	2	3	2	1	1	1	2	3	1	3	3	2	2	2	1	1	1	1	1	1	40
10	15	4	2	5	4	4	2	3	2	3	4	3	3	4	2	3	4	3	4	5	4	2	2	2	3	77
15	20	12	14	12	13	13	16	16	16	8	5	7	10	11	11	11	10	11	13	11	10	12	13	16	13	284
20	25	23	22	24	22	28	23	23	22	17	18	21	20	20	23	25	26	28	24	22	25	26	30	24	28	564
25	30	45	47	44	46	43	44	46	48	48	48	44	44	48	47	48	49	49	45	47	47	45	43	49	48	1112
30	35	74	70	74	67	65	68	60	48	47	45	53	56	59	69	66	66	66	74	76	73	76	76	70	73	1571
35	40	86	77	74	77	81	77	78	81	70	74	87	89	90	80	78	90	92	86	86	88	91	91	88	78	1991
40	45	67	77	73	73	65	66	64	59	56	65	56	66	67	73	78	73	69	71	74	70	68	62	65	67	1626
45	50	38	38	42	44	48	46	42	44	47	48	54	47	42	40	38	30	29	24	27	30	28	33	35	40	934
50	55	7	8	9	10	6	11	21	20	16	15	15	9	8	6	6	7	6	9	10	10	6	8	7	6	238
55	60	3	3	2	2	4	2	4	4	4	5	4	3	3	2	1	1	3	3	3	3	4	1	3	4	71
60	65	1	1	1	1	1	2	1	1	0	0	0	0	0	0	0	0	0	0	0	1	1	1	1	0	13
65	70	0	0	0	0	0	0	0	0	0	0	0	0	0	0	0	0	0	0	0	0	0	0	0	0	0
70	75	0	0	0	0	0	0	0	0	0	0	0	0	0	0	0	0	0	0	0	0	0	0	0	0	0
75	80	0	0	0	0	0	0	0	0	0	0	0	0	0	0	0	0	0	0	0	0	0	0	0	0	0
80		0	0	0	0	0	0	0	0	0	0	0	0	0	0	0	0	0	0	0	0	0	0	0	0	0
UNKNO		4	4	4	4	5	5	5	18	47	36	18	14	11	8	7	6	6	6	3	3	3	4	4	4	229
TOTAL		365	365	365	365	365	365	365	365	365	365	365	365	365	365	365	365	365	365	365	365	365	365	365	365	8760

Table 2.3-20

Monthly Averages of Psychrometric Data Based on Period of Record (1950-1970)

		JAN	FEB	MAR	APR	MAY	JUNE	JULY	AUG	SEPT	OCT	NOV	DEC	YEAR
AVERAGES														
	DRY BULB	30.3	37.5	44.0	52.5	61.8	69.9	77.5	75.3	67.0	53.2	40.1	33.4	53.5
	WET BULB	27.9	33.6	37.3	42.8	49.1	54.5	57.9	57.3	52.6	45.4	36.4	31.2	43.8
	REL HUM.	76.0	69.7	55.0	46.4	41.8	39.4	31.5	34.9	39.9	57.7	72.6	80.8	53.8
	DEWPOINT	23.2	27.4	27.3	30.4	36.0	41.2	42.3	42.8	39.5	36.9	31.1	27.5	33.8
MONTHLY AVERAGE EXTREMES														
	HIGHEST	43.0	44.0	48.7	56.2	68.7	75.5	82.8	82.5	72.0	59.1	45.8	38.8	56.3
DRY BULB	YEAR	1953	1958	1968	1956	1958	1969	1960	1967	1967	1952	1954	1953	1953
	LOWEST	12.9	25.8	39.6	48.3	57.2	64.2	73.2	70.6	61.6	50.3	32.3	26.5	51.0
	YEAR	1950	1956	1955	1955	1962	1953	1963	1964	1970	1968	1955	1964	1955+
	HIGHEST	39.3	40.7	40.8	45.1	54.6	58.6	61.2	61.1	56.5	47.7	42.3	35.8	46.5
WET BULB	YEAR	1953	1958	1963	1962	1958	1958	1958	1961	1963	1962	1954	1966	1958
	LOWEST	12.4	23.4	32.9	39.3	45.4	51.4	55.6	54.9	48.3	42.4	29.6	25.0	41.8
	YEAR	1950	1956	1955	1955	1959	1954	1954	1964	1970	1970	1955	1964	1955
	HIGHEST	89	87	66	64	*52	54	40	44	55	74	80	90	58
REL HUM.	YEAR	1960	1963	1950	1963	1962+	1950	1955	1968	1969	1962	1956	1950	1950+
	LOWEST	60	54	44	37	31	34	22	24	34	42	64	69	49
	YEAR	1963	1967	1965	1966	1966	1960	1959	1967	1952	1952	1963+	1968	1967
	HIGHEST	34.4	36.7	34.0	37.1	43.8	47.5	46.6	46.9	45.4	43.5	38.3	34.3	37.7
DEWPOINT	YEAR	1953	1958	1961	1963	1957	1958	1958	1961	1963	1962	1954	1950	1958
	LOWEST	6.5	17.3	20.8	26.2	30.4	37.5	35.4	38.4	33.8	32.1	24.0	21.0	31.5
	YEAR	1950	1956	1965+	1955	1964	1954	1959	1955	1970	1970	1959	1951	1955

+Also in Earlier Years

*Although not included in these tables, an average of 63% was recorded in 1948

Table 2.3-21

Diurnal Variation of Precipitation Intensity (Inches/Hour) at CGS and Monthly Total Precipitation (Inches) at the Hanford Reservation

HOUR	APRIL 1974	MAY 1974	JUNE 1974	JULY 1974	AUGUST 1974	SEPTEMBER 1974	OCTOBER 1974	NOVEMBER 1974	DECEMBER 1974	JANUARY 1975	FEBRUARY 1975	MARCH 1975	AVERAGE FOR HOUR (APRIL 1974 – MARCH 1975)
01	0.000	0.136	0.000	0.168	0.000	0.000	0.000	0.000	0.016	0.000	0.032	0.040	0.071
02	0.000	0.016	0.000	0.040	0.000	0.000	0.000	0.016	0.040	0.000	0.032	0.000	0.029
03	0.016	0.000	0.000	0.032	0.000	0.000	0.000	0.000	0.032	0.020	0.000	0.000	0.026
04	0.000	0.000	0.000	0.016	0.000	0.000	0.000	0.000	0.020	0.016	0.000	0.000	0.018
05	0.016	0.032	0.000	0.000	0.000	0.000	0.000	0.000	0.020	0.064	0.000	0.000	0.030
06	0.000	0.048	0.000	0.016	0.000	0.000	0.000	0.000	0.016	0.072	0.000	0.000	0.045
07	0.000	0.072	0.000	0.032	0.000	0.000	0.000	0.016	0.016	0.020	0.016	0.016	0.026
08	0.000	0.000	0.000	0.000	0.000	0.000	0.000	0.024	0.000	0.024	0.024	0.048	0.029
09	0.000	0.088	0.000	0.000	0.000	0.000	0.000	0.056	0.000	0.024	0.016	0.032	0.039
10	0.000	0.000	0.000	0.000	0.000	0.000	0.000	0.024	0.000	0.000	0.072	0.024	0.036
11	0.000	0.000	0.000	0.016	0.000	0.000	0.000	0.000	0.000	0.056	0.040	0.028	0.034
12	0.000	0.000	0.000	0.000	0.000	0.000	0.000	0.000	0.024	0.024	0.016	0.024	0.022
13	0.024	0.000	0.000	0.000	0.000	0.000	0.000	0.000	0.056	0.036	0.016	0.024	0.032
14	0.032	0.000	0.024	0.000	0.000	0.000	0.000	0.000	0.020	0.024	0.000	0.000	0.024
15	0.016	0.000	0.032	0.000	0.000	0.064	0.000	0.032	0.036	0.032	0.000	0.000	0.033
16	0.016	0.000	0.000	0.016	0.000	0.000	0.000	0.036	0.024	0.048	0.024	0.000	0.029
17	0.024	0.000	0.000	0.056	0.000	0.000	0.000	0.040	0.032	0.040	0.064	0.000	0.038
18	0.016	0.000	0.000	0.000	0.000	0.000	0.016	0.028	0.000	0.032	0.036	0.000	0.026
19	0.020	0.000	0.000	0.024	0.000	0.000	0.000	0.052	0.040	0.032	0.000	0.000	0.034
20	0.000	0.000	0.000	0.000	0.000	0.000	0.064	0.028	0.000	0.020	0.024	0.048	0.032
21	0.000	0.000	0.000	0.000	0.000	0.000	0.000	0.000	0.032	0.024	0.016	0.088	0.040
22	0.032	0.000	0.000	0.000	0.000	0.000	0.000	0.000	0.000	0.016	0.000	0.000	0.021
23	0.080	0.000	0.000	0.032	0.000	0.000	0.000	0.000	0.024	0.048	0.020	0.016	0.040
24	0.036	0.048	0.000	0.000	0.000	0.000	0.016	0.000	0.048	0.024	0.032	0.080	0.038
MONTHLY TOTAL PRECIPITATION (INCHES)													
CGS	0.55	0.44	0.06	0.45	0.00	0.06	0.10	0.56	0.67	0.93	0.67	0.52	4.92
HMS	0.46	0.28	0.12	0.71	trace	0.01	0.21	0.71	0.97	1.43	0.98	0.33	6.21
HMS (hist) 1946-1970 Mean Total	0.44	0.50	0.66	0.16	0.21	0.30	0.61	0.80	0.81	0.97	0.58	0.38	6.53

Table 2.3-22

Frequency of Occurrence, Precipitation (Inches/Hour) Versus Time of Day
from 4/74 through 3/75 at CGS

	Time of Day																								
	1	2	3	4	5	6	7	8	9	10	11	12	13	14	15	16	17	18	19	20	21	22	23	24	TOTAL
016	6	5	7	4	5	5	8	5	6	4	5	5	6	6	8	7	9	8	7	8	4	3	8	10	149
050	2	0	0	0	1	1	1	0	2	1	1	0	1	0	2	0	2	1	1	1	1	0	2	1	21
100	2	0	0	0	0	1	0	0	0	0	0	0	0	0	0	0	0	0	0	0	0	0	0	0	3
250	0	0	0	0	0	0	0	0	0	0	0	0	0	0	0	0	0	0	0	0	0	0	0	0	0
500	6	0	0	0	0	0	0	0	0	0	0	0	0	0	0	0	0	0	0	0	0	0	0	0	0

Table 2.3-22a

Annual Frequency of Occurrence of Wind Direction and Wind Speed Versus Precipitation Intensity

FREQUENCY OF OCCURRENCE, WIND DIRECTION VS SPEED FROM 4/74 THROUGH 3/75 AT WPPSS2 FOR 33 FOOT LEVEL
RAIN INTENSITY GREATER THAN OR EQUAL .016 INCHES PER HOUR

	SPEED CLASS (MPH)								
	CALM	1-3	4-7	8-12	13-18	19-24	25-UP	UNKNO	TOTAL
NNE	0	2	2	0	0	0	0	0	4
NE	0	2	3	0	0	0	0	0	5
ENE	0	2	1	0	0	0	0	0	3
E	0	1	4	0	0	0	0	0	5
ESE	0	7	2	0	0	0	0	0	9
SE	0	1	1	2	1	0	0	0	5
SSE	0	4	6	4	4	1	0	0	21
S	0	3	3	5	0	0	0	0	11
SSW	0	3	3	4	3	1	0	0	14
SW	0	1	3	4	1	0	0	0	9
WSW	0	1	2	1	0	1	0	0	5
W	0	0	3	2	0	0	1	0	6
WNW	0	0	5	7	0	0	0	0	12
NW	0	5	10	5	1	0	0	0	21
NNW	0	2	10	2	0	0	0	0	14
N	0	0	1	0	0	0	0	0	1
VAR	0	2	1	0	0	0	0	0	3
CALM	0	0	0	0	0	0	0	0	0
UNKNO	0	0	0	0	0	0	0	1	1
TOTAL	0	36	60	36	10	3	1	1	149

FREQUENCY OF OCCURRENCE, WIND DIRECTION VS SPEED FROM 4/74 THROUGH 3/75 AT WPPSS2 FOR 33 FOOT LEVEL
RAIN INTENSITY GREATER THAN OR EQUAL .050 INCHES PER HOUR

	SPEED CLASS (MPH)								
	CALM	1-3	4-7	8-12	13-18	19-24	25-UP	UNKNO	TOTAL
NNE	0	1	1	0	0	0	0	0	2
NE	0	1	0	0	0	0	0	0	1
ENE	0	0	0	0	0	0	0	0	0
E	0	0	0	0	0	0	0	0	0
ESE	0	0	0	0	0	0	0	0	0
SE	0	0	0	1	0	0	0	0	1
SSE	0	0	0	3	2	0	0	0	5
S	0	0	0	0	0	0	0	0	0
SSW	0	0	0	2	0	0	0	0	2
SW	0	0	0	0	0	0	0	0	0
WSW	0	0	0	1	0	0	0	0	1
W	0	0	0	1	0	0	0	0	1
WNW	0	0	2	0	0	0	0	0	2
NW	0	0	1	3	0	0	0	0	4
NNW	0	0	1	1	0	0	0	0	2
N	0	0	0	0	0	0	0	0	0
VAR	0	0	0	0	0	0	0	0	0
CALM	0	0	0	0	0	0	0	0	0
UNKNO	0	0	0	0	0	0	0	0	0
TOTAL	0	2	5	12	2	0	0	0	21

FREQUENCY OF OCCURRENCE, WIND DIRECTION VS SPEED FROM 4/74 THROUGH 3/75 AT WPPSS2 FOR 33 FOOT LEVEL
RAIN INTENSITY GREATER THAN OR EQUAL .100 INCHES PER HOUR

	SPEED CLASS (MPH)								
	CALM	1-3	4-7	8-12	13-18	19-24	25-UP	UNKNO	TOTAL
NNE	0	0	0	0	0	0	0	0	0
NE	0	0	0	0	0	0	0	0	0
ENE	0	0	0	0	0	0	0	0	0
E	0	0	0	0	0	0	0	0	0
ESE	0	0	0	0	0	0	0	0	0
SE	0	0	0	0	1	0	0	0	0
SSE	0	0	0	0	0	0	0	0	1
S	0	0	0	0	0	0	0	0	0
SSW	0	0	0	0	0	0	0	0	0
SW	0	0	0	0	0	0	0	0	0
WSW	0	0	0	0	0	0	0	0	0
W	0	0	0	0	0	0	0	0	0
WNW	0	0	1	0	0	0	0	0	1
NW	0	0	0	0	0	0	0	0	0
NNW	0	0	0	1	0	0	0	0	1
N	0	0	0	0	0	0	0	0	0
VAR	0	0	0	0	0	0	0	0	0
CALM	0	0	0	0	0	0	0	0	0
UNKNO	0	0	0	0	0	0	0	0	0
TOTAL	0	0	1	1	1	0	0	0	3

Table 2.3-22a

Annual Frequency of Occurrence of Wind Direction and Wind Speed Versus Precipitation Intensity (Continued)

FREQUENCY OF OCCURRENCE, WIND DIRECTION VS SPEED FROM 4/74 THROUGH 3/75 AT WPPSS2 FOR 33 FOOT LEVEL
RAIN INTENSITY GREATER THAN OR EQUAL .250 INCHES PER HOUR

	SPEED CLASS (MPH)								
	CALM	1-3	4-7	8-12	13-18	19-24	25-UP	UNKNO	TOTAL
NNE	0	0	0	0	0	0	0	0	0
NE	0	0	0	0	0	0	0	0	0
ENE	0	0	0	0	0	0	0	0	0
E	0	0	0	0	0	0	0	0	0
ESE	0	0	0	0	0	0	0	0	0
SE	0	0	0	0	0	0	0	0	0
SSE	0	0	0	0	0	0	0	0	0
S	0	0	0	0	0	0	0	0	0
SSW	0	0	0	0	0	0	0	0	0
SW	0	0	0	0	0	0	0	0	0
WSW	0	0	0	0	0	0	0	0	0
W	0	0	0	0	0	0	0	0	0
WNW	0	0	0	0	0	0	0	0	0
NW	0	0	0	0	0	0	0	0	0
NNW	0	0	0	0	0	0	0	0	0
N	0	0	0	0	0	0	0	0	0
VAR	0	0	0	0	0	0	0	0	0
CALM	0	0	0	0	0	0	0	0	0
UNKNO	0	0	0	0	0	0	0	0	0
TOTAL	0	0	0	0	0	0	0	0	0

FREQUENCY OF OCCURRENCE, WIND DIRECTION VS SPEED FROM 4/74 THROUGH 3/75 AT WPPSS2 FOR 33 FOOT LEVEL
RAIN INTENSITY GREATER THAN OR EQUAL .500 INCHES PER HOUR

	SPEED CLASS (MPH)								
	CALM	1-3	4-7	8-12	13-18	19-24	25-UP	UNKNO	TOTAL
NNE	0	0	0	0	0	0	0	0	0
NE	0	0	0	0	0	0	0	0	0
ENE	0	0	0	0	0	0	0	0	0
E	0	0	0	0	0	0	0	0	0
ESE	0	0	0	0	0	0	0	0	0
SE	0	0	0	0	0	0	0	0	0
SSE	0	0	0	0	0	0	0	0	0
S	0	0	0	0	0	0	0	0	0
SSW	0	0	0	0	0	0	0	0	0
SW	0	0	0	0	0	0	0	0	0
WSW	0	0	0	0	0	0	0	0	0
W	0	0	0	0	0	0	0	0	0
WNW	0	0	0	0	0	0	0	0	0
NW	0	0	0	0	0	0	0	0	0
NNW	0	0	0	0	0	0	0	0	0
N	0	0	0	0	0	0	0	0	0
VAR	0	0	0	0	0	0	0	0	0
CALM	0	0	0	0	0	0	0	0	0
UNKNO	0	0	0	0	0	0	0	0	0
TOTAL	0	0	0	0	0	0	0	0	0

Table 2.3-23

Statistic on Fog at the Hanford Meteorology Station (Based on 1945-1970 Data)*

	All Fog (viz 0-6 Miles)						Dense Fog (viz 1/4 Mile or Less)						Greatest No. of Hours of Persistence	
	No. of Days			No. of Hours			No. of Days			No. of Hours				
	Avg	Greatest	Least	Avg	Greatest	Least	Avg	Greatest	Least	Avg	Greatest	Least	(9) AF	(10) DF
J	9	19	0	68.3	193.4	0	6	14	0	20.4	52.4	0	58.1	15.0
F	6	20	0	36.4	206.2	0	3	11	0	12.7	86.7	0	58.0	16.7
M	1	6	0	4.4	20.6	0	1	5	0	1.8	7.8	0	12.2	5.0
A	#	1	0	0.3	2.8	0	#	1	0	0.1	1.8	0	2.8	0
M	#	3	0	0.3	2.7	0	#	1	0	0.1	1.6	0	2.7	1.6
J	#	1	0	#	0.5	0	0	0	0	0	0	0	0.5	0
J	#	1	0	#	0.7	0	0	0	0	0	0	0	0.7	0
A	#	1	0	#	1.0	0	#	1	0	#	1.0	0	0.7	0.7
S	#	1	0	0.3	5.5	0	#	1	0	0.1	3.2	0	2.6	1.4
O	2	9	0	7.6	63.6	0	1	6	0	3.1	35.2	0	39.0	15.8
N	8	14	1	55.4	148.0	1.0	5	13	0	21.1	71.4	0	65.4	20.6
D	12	20 (1)	2 (2)	105.4	193.8 (3)	6.5 (4)	8	17 (5)	2 (6)	42.0	119.8 (7)	1.3 (8)	72.3	47.0
Y	33	57	22	278.4	462.5	147.7	24	42	2	101.4	201.5	24.3	72.3	47.0

\# Less than 1/2

1. Greatest number of days in a season -- occurred in 1969-70
2. Least number of days in a season -- occurred in 1948-49
3. Greatest number of hours in a season -- occurred in 1964-65
4. Least number of hours in a season -- occurred in 1948-49
5. Greatest number of days in a season -- occurred in 1950-51
6. Least number of days in a season -- occurred in 1948-49
7. Greatest number of hours in a season -- occurred in 1962-63
8. Least number of hours in a season -- occurred in 1948-49
9. AF denotes all fog (viz 0-6 miles)
10. DF denotes dense fog (viz 1/4 mile or less). Records for persistence of dense fog did not begin until 1953.

*Summation for the year does not necessarily reflect the summation of individual months.

Table 2.3-24

Percent Frequency Distribution of Wind Speeds During Hourly Observations of Fog at Pasco (1966-1970) and at HMS (1960-1970)

	Speed Class*					
Station	Calm	1-3	4-7	8-12	12	Total
HMS[1]	29	44	25	2	0	100
Pasco[2]	61	8	24	6	1	100

* Speed classes are in units of mph for HMS, and in units of knots for Pasco.

[1] Statistics for HMS are only for hourly observations of fog restricting visibility to 1/2 mile or less.

[2] Statistics for Pasco are for all hourly observations of fog (visibility 0-6 miles).

Table 2.3-25

Percent Frequency of Occurrence of Stability (ΔT Distribution)
at the Hanford Reservation (1)

Month/Year/Site	Δt Range (°F/200 ft) Very Unstable Less Than -2.5	Unstable -2.5 to -1.5	Neutral -1.5 to -0.5	Moderately Stable -0.5 to +3.5	Very Stable Greater Than 3.5
4/74 CGS	0.14	15.69	27.78	43.33	12.36
4/74 HMS	3.61	25.28	26.94	40.83	3.19
APRIL 1955-1970 HMS (hist)	5.10	20.88	30.22	39.19	4.61
5/74 CGS	0.27	23.39	30.51	35.89	8.06
5/74 HMS	6.18	33.20	26.34	32.39	1.88
MAY 1955-1970 HMS (hist)	8.33	22.56	30.18	34.71	4.22
6/74 CGS	1.25	35.42	17.36	30.42	5.42
6/74 HMS	7.36	33.33	24.72	31.39	3.19
JUNE 1955-1970 HMS (hist)	8.60	26.25	30.75	31.45	2.95
7/74 CGS	0.00	28.23	25.81	27.02	14.11
7/74 HMS	6.72	30.78	28.90	30.51	3.09
JULY 1955-1970 HMS (hist)	8.74	26.31	27.69	33.42	3.84
8/74 CGS	0.00	28.09	20.83	23.79	25.54
8/74 HMS	8.20	32.12	18.28	33.74	7.66
AUGUST 1955-1970 HMS (hist)	7.33	23.73	26.55	37.65	4.74
9/74 CGS	0.00	21.67	20.83	21.25	35.14
9/74 HMS	6.94	25.69	17.64	33.06	16.67
SEPTEMBER 1955-1970 HMS (hist)	5.05	19.90	25.11	40.89	9.05
10/74 CGS	0.00	14.38	18.15	25.81	38.98
10/74 HMS	3.36	20.16	17.74	41.26	17.47
OCTOBER 1955-1970 HMS (hist)	2.23	11.82	27.03	48.87	10.06
11/74 CGS	0.00	4.58	28.06	52.22	14.44
11/74 HMS	0.00	5.00	30.42	57.22	5.83
NOVEMBER 1955-1970 HMS (hist)	0.76	6.82	31.74	53.37	7.30
12/74 CGS	0.00	1.75	22.72	56.18	18.15
12/74 HMS	0.13	5.24	22.72	60.89	11.02
DECEMBER 1955-1970 HMS (hist)	0.40	4.35	36.53	50.98	7.74

(1)Δt at CGS is computed from 33 to 245 foot levels; at HMS, Δt is computed from 50 to 250 foot level.

Table 2.3-25

Percent Frequency of Occurrence of Stability (ΔT Distribution)
at the Hanford Reservation (1) (Continued)

Month/Year/Site	t Range (°F/200 ft) Very Unstable Less Than -2.5	Unstable -2.5 to -1.5	Neutral -1.5 to -0.5	Moderately Stable -0.5 to +3.5	Very Stable Greater Than 3.5
1/75 CGS	0.00	2.55	30.51	53.90	10.62
1/74 HMS (1975 Not Available)	0.13	5.65	29.30	59.54	5.11
JANUARY 1955-1970 HMS (hist)	0.34	4.73	34.78	52.23	7.91
2/75 CGS	0.00	8.78	30.51	49.40	10.57
2/74 HMS (1975 Not Available)	0.30	14.43	26.93	51.19	7.14
FEBRUARY 1955-1970 HMS (hist)	1.51	9.29	28.24	52.05	8.90
3/75 CGS	0.13	20.03	17.34	42.07	11.96
3/74 HMS (1975 Not Available)	1.48	19.09	26.34	47.04	6.05
MARCH 1955-1970 HMS (hist)	3.49	15.84	28.22	45.25	6.61
April 1974 - March 1975 CGS	0.14	17.17	24.25	38.21	17.17
1955-1970 HMS (hist)	4.32	16.04	29.80	41.84	6.49
April 1975 - March 1976 CGS	0.59	21.31	21.85	37.20	17.51

(1)Δt at CGS is computed from 33 to 245 foot levels; at HMS, Δt is computed from 50 to 250 foot level.

Table 2.3-26

Frequency of Occurrence ΔT (°F/200 ft) Versus Time of Day from 4/74 through 3/75
at CGS between 245 and 33 ft Levels

	Time of Day																								
	1	2	3	4	5	6	7	8	9	10	11	12	13	14	15	16	17	18	19	20	21	22	23	24	TOTAL
LT-2.5	0	0	0	0	0	0	0	0	0	0	3	2	2	1	2	1	1	0	0	0	0	0	0	0	12
GE-2.5 LT-1.5	0	0	0	0	0	0	3	43	98	137	156	175	213	217	196	148	90	27	1	0	0	0	0	0	1504
GE-1.5 LT-0.5	17	16	16	16	18	37	97	137	134	150	168	158	123	123	145	168	181	167	111	52	33	21	18	18	2124
GE-0.5 LT-3.5	216	202	193	197	187	188	177	131	76	40	20	16	14	14	14	42	85	156	203	236	235	242	238	225	3347
GE-3.5	124	141	148	143	150	133	84	36	9	5	1	1	1	1	1	0	2	8	41	71	91	95	102	116	1504
UNKNO	8	6	8	9	10	7	4	18	48	33	17	13	12	9	7	6	6	7	9	6	6	7	7	6	269
TOTAL	365	365	365	365	365	365	365	365	365	365	365	365	365	365	365	365	365	365	365	365	365	365	365	365	8760

Average for Hour

3.008	3.261	2.714	.243	-1.104	-1.432	-1.502	-1.240	-.155	1.656	2.228	2.685													
2.899	3.226	3.227	1.499	-.654	-1.303	-1.521	-1.441	-.835	.762	2.144	2.383	.883												

Table 2.3-27

Frequency of Occurrence, Sigma (°) Versus Time of Day from 4/74 through 3/75
at CGS for 33 ft Level

	Time of Day																								
	1	2	3	4	5	6	7	8	9	10	11	12	13	14	15	16	17	18	19	20	21	22	23	24	TOTAL
GE22.5	111	110	105	104	104	112	96	117	124	139	144	152	152	153	137	109	62	44	52	51	79	88	107	98	2550
LT22.5 GE17.5	30	33	32	38	33	32	34	29	32	35	39	44	33	36	46	39	32	20	21	28	36	26	27	41	790
LT17.5 GE12.5	43	48	54	52	52	47	54	48	46	58	70	55	68	60	50	59	50	36	34	39	43	51	47	41	1205
LT 12.5 GE7.5	104	91	87	74	94	97	112	114	81	79	71	79	83	80	94	107	144	151	113	112	105	96	98	88	2354
LT7.5 GE3.75	60	61	64	75	62	56	58	31	31	18	19	17	13	23	27	39	65	92	121	112	90	86	68	77	1365
LT3.75 GE2.1	0	5	7	5	4	6	1	0	0	0	1	0	0	0	0	1	1	11	13	8	5	8	5	6	87
LT2.1	8	8	8	7	5	5	0	2	0	0	0	0	0	0	0	0	0	0	3	7	5	2	4	5	69
UNKNO	9	9	8	10	11	10	10	24	51	36	21	18	16	13	11	11	11	11	8	8	8	8	9	9	340
TOTAL	365	365	365	365	365	365	365	365	365	365	365	365	365	365	365	365	365	365	365	365	365	365	365	365	8760

Average for Hour

23.638	22.406	22.506	23.575	22.794	22.421	21.730	23.031	27.378	27.390	28.124	27.768	28.874	28.298	27.136	21.895	17.011	14.198	15.285	14.656	17.978	18.667	20.985	20.997	22.384

Table 2.3-28

Joint Frequency Distribution of Wind Speed and Direction

PLANT NAME: COLUMBIA GENERATING STATION
DATA PERIOD: JFD 1996-1999
TYPE OF RELEASE: GROUND LEVEL RELEASE
SOURCE OF DATA: CGS ONSITE MET DATA TAKEN FROM FRAMATOME JFD FILES FOR 96-99
PROGRAM: PAVAN, 10/76, 8/79 REVISION, IMPLEMENTATION OF REGULATORY GUIDE 1.145, REVISION 1

METEOROLOGICAL INSTRUMENTATION
WIND SENSORS HEIGHT: 10.0 METER
DELTA-T HEIGHTS: 10 - 75 METERS

JOINT FREQUENCY DISTRIBUTION OF WIND SPEED AND DIRECTION — ATMOSPHERIC STABILITY CLASS A

WIND SPEED (M/S)

TOWER	RELEASE	N	NNE	NE	ENE	E	ESE	SE	SSE	S	SSW	SW	WSW	W	WNW	NW	NNW	TOTAL
.42	.42	.029	.035	.027	.021	.024	.022	.025	.014	.024	.017	.013	.016	.013	.020	.022	.024	.348
1.01	1.01	.101	.123	.095	.073	.085	.079	.088	.051	.085	.060	.044	.057	.047	.070	.079	.085	1.223
2.03	2.03	.231	.190	.161	.114	.095	.123	.247	.180	.224	.155	.098	.063	.095	.098	.155	.269	2.497
3.02	3.02	.190	.145	.130	.035	.032	.095	.158	.247	.209	.107	.073	.054	.028	.054	.085	.171	1.811
4.00	4.00	.168	.117	.060	.022	.016	.028	.139	.262	.180	.107	.076	.038	.035	.016	.060	.085	1.410
5.03	5.03	.114	.088	.035	.006	.013	.013	.070	.114	.196	.117	.073	.025	.025	.019	.013	.098	1.018
6.01	6.01	.051	.028	.016	.003	.000	.003	.019	.047	.180	.079	.035	.013	.016	.019	.016	.054	.578
8.02	8.02	.079	.057	.032	.000	.000	.000	.003	.022	.196	.092	.066	.041	.028	.035	.019	.035	.705
10.04	10.04	.003	.003	.006	.000	.000	.000	.000	.006	.063	.016	.035	.025	.022	.019	.013	.000	.212
13.03	13.03	.000	.006	.000	.000	.000	.000	.000	.003	.022	.006	.003	.009	.009	.022	.009	.003	.095
18.04	18.04	.000	.000	.000	.000	.000	.000	.000	.000	.000	.003	.000	.000	.000	.000	.000	.003	.006
44.70	44.70	.000	.000	.000	.000	.000	.000	.000	.000	.000	.000	.000	.000	.000	.000	.000	.000	.000
TOTAL		.96	.79	.56	.27	.26	.36	.75	.95	1.38	.76	.52	.34	.32	.37	.47	.83	9.90

JOINT FREQUENCY DISTRIBUTION OF WIND SPEED AND DIRECTION — ATMOSPHERIC STABILITY CLASS B

WIND SPEED (M/S)

TOWER	RELEASE	N	NNE	NE	ENE	E	ESE	SE	SSE	S	SSW	SW	WSW	W	WNW	NW	NNW	TOTAL
.42	.42	.007	.008	.001	.005	.007	.005	.006	.006	.005	.005	.003	.003	.004	.003	.008	.012	.092
1.01	1.01	.022	.025	.003	.016	.022	.016	.019	.019	.016	.016	.009	.009	.013	.009	.025	.038	.278
2.03	2.03	.063	.041	.035	.013	.019	.035	.038	.025	.070	.057	.051	.028	.028	.025	.038	.063	.629
3.02	3.02	.085	.057	.047	.013	.009	.016	.063	.076	.095	.025	.032	.016	.016	.022	.028	.070	.670
4.00	4.00	.047	.057	.032	.006	.006	.022	.038	.085	.076	.047	.022	.019	.019	.022	.038	.032	.569
5.03	5.03	.035	.032	.025	.003	.000	.006	.009	.051	.092	.047	.032	.013	.019	.019	.016	.025	.424
6.01	6.01	.019	.006	.003	.003	.000	.000	.006	.019	.047	.041	.016	.000	.028	.022	.013	.009	.234
8.02	8.02	.013	.006	.006	.009	.000	.000	.009	.013	.066	.060	.051	.006	.032	.016	.006	.013	.307
10.04	10.04	.003	.000	.000	.000	.000	.000	.000	.003	.009	.025	.025	.013	.003	.006	.003	.000	.092
13.03	13.03	.000	.006	.000	.000	.000	.000	.000	.000	.000	.013	.025	.000	.013	.013	.000	.000	.070
18.04	18.04	.000	.000	.000	.000	.000	.000	.000	.000	.000	.000	.000	.000	.000	.000	.000	.000	.000
44.70	44.70	.000	.000	.000	.000	.000	.000	.000	.000	.000	.000	.000	.000	.000	.000	.000	.000	.000
TOTAL		.29	.24	.15	.07	.06	.10	.19	.30	.48	.34	.27	.11	.17	.16	.18	.26	3.36

Table 2.3-28

Joint Frequency Distribution of Wind Speed and Direction (Continued)

JOINT FREQUENCY DISTRIBUTION OF WIND SPEED AND DIRECTION — ATMOSPHERIC STABILITY CLASS C

TOWER	RELEASE	N	NNE	NE	ENE	E	ESE	SE	SSE	S	SSW	SW	WSW	W	WNW	NW	NNW	TOTAL
.42	.42	.007	.011	.009	.005	.003	.004	.005	.002	.007	.008	.008	.003	.003	.003	.003	.007	.088
1.01	1.01	.019	.032	.025	.016	.009	.013	.016	.006	.019	.022	.022	.009	.009	.009	.009	.019	.256
2.03	2.03	.076	.060	.035	.013	.019	.009	.025	.047	.044	.057	.028	.044	.022	.028	.051	.054	.613
3.02	3.02	.079	.057	.035	.028	.022	.003	.063	.098	.082	.044	.028	.019	.028	.038	.054	.079	.759
4.00	4.00	.054	.047	.009	.003	.006	.013	.035	.076	.092	.044	.044	.022	.025	.009	.022	.051	.553
5.03	5.03	.051	.035	.016	.000	.000	.006	.022	.057	.063	.047	.047	.035	.022	.022	.022	.035	.480
6.01	6.01	.022	.009	.009	.000	.000	.000	.003	.035	.063	.057	.022	.016	.022	.022	.013	.022	.316
8.02	8.02	.022	.006	.006	.000	.000	.000	.016	.016	.047	.063	.054	.028	.032	.016	.009	.028	.345
10.04	10.04	.000	.006	.000	.000	.000	.000	.000	.000	.019	.032	.041	.044	.013	.028	.022	.003	.209
13.03	13.03	.000	.000	.000	.000	.000	.000	.000	.000	.006	.019	.009	.003	.003	.025	.000	.003	.070
18.04	18.04	.000	.000	.000	.000	.000	.000	.000	.000	.000	.000	.000	.000	.000	.000	.000	.000	.000
44.70	44.70	.000	.000	.000	.000	.000	.000	.000	.000	.000	.000	.000	.000	.000	.000	.000	.000	.000
TOTAL		.33	.26	.14	.07	.06	.05	.19	.34	.44	.39	.30	.22	.18	.20	.21	.30	3.69

JOINT FREQUENCY DISTRIBUTION OF WIND SPEED AND DIRECTION — ATMOSPHERIC STABILITY CLASS D

WIND SPEED (M/S)

TOWER	RELEASE	N	NNE	NE	ENE	E	ESE	SE	SSE	S	SSW	SW	WSW	W	WNW	NW	NNW	TOTAL
.42	.42	.035	.025	.020	.018	.012	.010	.021	.018	.025	.015	.031	.019	.027	.030	.028	.031	.363
1.01	1.01	.142	.101	.082	.073	.051	.041	.085	.073	.101	.060	.126	.079	.111	.123	.114	.126	1.489
2.03	2.03	.332	.215	.168	.104	.117	.101	.205	.322	.322	.243	.136	.123	.158	.158	.471	.405	3.581
3.02	3.02	.420	.231	.171	.079	.073	.092	.193	.401	.338	.212	.168	.149	.092	.202	.468	.455	3.742
4.00	4.00	.218	.186	.126	.060	.057	.082	.218	.395	.398	.205	.161	.079	.101	.202	.414	.408	3.312
5.03	5.03	.193	.101	.107	.019	.016	.022	.133	.303	.326	.281	.142	.054	.126	.149	.310	.265	2.547
6.01	6.01	.130	.047	.051	.000	.000	.016	.051	.136	.228	.240	.107	.082	.092	.171	.231	.149	1.729
8.02	8.02	.032	.038	.013	.006	.000	.003	.013	.120	.335	.370	.202	.155	.107	.326	.161	.155	2.035
10.04	10.04	.003	.025	.019	.000	.000	.000	.003	.009	.123	.215	.142	.133	.057	.161	.088	.047	1.027
13.03	13.03	.003	.003	.013	.000	.000	.000	.000	.000	.041	.120	.101	.035	.016	.057	.051	.009	.449
18.04	18.04	.000	.000	.006	.000	.000	.000	.000	.000	.006	.022	.016	.000	.006	.006	.006	.009	.079
44.70	44.70	.000	.000	.000	.000	.000	.000	.000	.000	.000	.000	.000	.000	.000	.000	.000	.000	.000
TOTAL		1.51	.97	.78	.36	.33	.37	.92	1.78	2.24	1.98	1.33	.91	.89	1.59	2.34	2.06	20.35

Table 2.3-28

Joint Frequency Distribution of Wind Speed and Direction (Continued)

JOINT FREQUENCY DISTRIBUTION OF WIND SPEED AND DIRECTION — ATMOSPHERIC STABILITY CLASS E

WIND SPEED (M/S)

TOWER	RELEASE	N	NNE	NE	ENE	E	ESE	SE	SSE	S	SSW	SW	WSW	W	WNW	NW	NNW	TOTAL
.42	.42	.037	.029	.019	.021	.018	.013	.025	.029	.051	.043	.045	.043	.051	.074	.066	.045	.607
1.01	1.01	.142	.111	.073	.082	.070	.051	.095	.111	.196	.168	.174	.164	.196	.284	.253	.174	2.342
2.03	2.03	.370	.291	.199	.095	.070	.098	.247	.411	.490	.392	.281	.307	.310	.446	.651	.676	5.332
3.02	3.02	.307	.250	.171	.085	.060	.063	.288	.544	.484	.288	.228	.218	.256	.480	.762	.540	5.022
4.00	4.00	.161	.104	.145	.025	.016	.079	.348	.670	.484	.196	.199	.142	.272	.455	.610	.414	4.320
5.03	5.03	.079	.032	.047	.028	.000	.038	.247	.525	.553	.250	.164	.107	.136	.509	.487	.234	3.436
6.01	6.01	.035	.013	.009	.016	.000	.006	.101	.288	.430	.316	.199	.104	.136	.442	.389	.107	2.592
8.02	8.02	.025	.041	.019	.003	.003	.000	.070	.224	.424	.518	.224	.120	.130	.477	.354	.180	2.813
10.04	10.04	.009	.041	.022	.000	.000	.000	.003	.009	.076	.348	.196	.038	.038	.202	.098	.066	1.147
13.03	13.03	.003	.000	.003	.000	.000	.000	.000	.000	.025	.133	.082	.019	.019	.063	.032	.013	.392
18.04	18.04	.000	.000	.000	.000	.000	.000	.000	.000	.006	.025	.016	.000	.000	.006	.000	.000	.054
44.70	44.70	.000	.000	.000	.000	.000	.000	.000	.000	.000	.000	.000	.000	.000	.000	.000	.000	.000
TOTAL		1.17	.91	.71	.36	.24	.35	1.42	2.81	3.22	2.68	1.81	1.26	1.54	3.44	3.70	2.45	28.06

JOINT FREQUENCY DISTRIBUTION OF WIND SPEED AND DIRECTION — ATMOSPHERIC STABILITY CLASS F

WIND SPEED (M/S)

TOWER	RELEASE	N	NNE	NE	ENE	E	ESE	SE	SSE	S	SSW	SW	WSW	W	WNW	NW	NNW	TOTAL
.42	.42	.075	.055	.037	.016	.016	.014	.020	.035	.055	.041	.049	.057	.065	.070	.083	.072	.759
1.01	1.01	.272	.199	.136	.057	.057	.051	.073	.126	.202	.149	.177	.209	.237	.256	.303	.262	2.765
2.03	2.03	.531	.446	.221	.095	.044	.076	.209	.512	.629	.455	.303	.265	.322	.442	.733	.670	5.954
3.02	3.02	.307	.205	.126	.051	.025	.032	.174	.604	.733	.389	.205	.183	.164	.319	.512	.528	4.558
4.00	4.00	.041	.025	.070	.032	.006	.013	.269	.582	.578	.288	.117	.088	.142	.326	.442	.177	3.195
5.03	5.03	.006	.003	.009	.009	.000	.006	.111	.414	.297	.120	.051	.051	.101	.171	.161	.073	1.583
6.01	6.01	.009	.000	.000	.000	.000	.000	.028	.092	.130	.107	.032	.016	.051	.088	.063	.013	.629
8.02	8.02	.000	.000	.000	.000	.000	.000	.013	.066	.104	.085	.032	.016	.006	.044	.006	.013	.386
10.04	10.04	.000	.000	.000	.000	.000	.000	.000	.006	.009	.047	.003	.000	.003	.000	.000	.000	.070
13.03	13.03	.000	.000	.000	.000	.000	.000	.000	.000	.006	.009	.006	.003	.000	.000	.000	.000	.025
18.04	18.04	.000	.000	.000	.000	.000	.000	.000	.000	.000	.000	.000	.000	.000	.000	.000	.000	.000
44.70	44.70	.000	.000	.000	.000	.000	.000	.000	.000	.000	.000	.000	.000	.000	.000	.000	.000	.000
TOTAL		1.24	.93	.60	.26	.15	.19	.90	2.44	2.75	1.69	.97	.89	1.09	1.72	2.31	1.81	19.92

Table 2.3-28

Joint Frequency Distribution of Wind Speed and Direction (Continued)

JOINT FREQUENCY DISTRIBUTION OF WIND SPEED AND DIRECTION — ATMOSPHERIC STABILITY CLASS G

WIND SPEED (M/S)

TOWER	RELEASE	N	NNE	NE	ENE	E	ESE	SE	SSE	S	SSW	SW	WSW	W	WNW	NW	NNW	TOTAL
.42	.42	.113	.111	.068	.030	.020	.022	.027	.054	.059	.047	.067	.061	.067	.071	.094	.134	1.046
1.01	1.01	.332	.326	.199	.088	.060	.063	.079	.158	.174	.139	.196	.180	.196	.209	.275	.392	3.066
2.03	2.03	.860	.787	.335	.092	.019	.019	.139	.357	.408	.335	.237	.120	.171	.307	.667	.796	5.648
3.02	3.02	.281	.237	.180	.044	.003	.000	.114	.493	.496	.155	.082	.051	.047	.139	.395	.405	3.123
4.00	4.00	.025	.025	.060	.019	.003	.000	.028	.307	.313	.111	.047	.019	.041	.044	.221	.101	1.365
5.03	5.03	.000	.000	.009	.006	.000	.000	.009	.136	.085	.025	.000	.013	.016	.016	.019	.003	.338
6.01	6.01	.000	.000	.000	.003	.000	.000	.000	.032	.028	.019	.000	.003	.000	.000	.006	.000	.092
8.02	8.02	.000	.000	.000	.000	.000	.000	.000	.006	.009	.003	.000	.000	.000	.000	.000	.000	.019
10.04	10.04	.000	.000	.000	.000	.000	.000	.000	.003	.006	.000	.000	.000	.000	.000	.000	.000	.009
13.03	13.03	.000	.000	.000	.000	.000	.000	.000	.000	.000	.003	.000	.000	.000	.000	.000	.000	.003
18.04	18.04	.000	.000	.000	.000	.000	.000	.000	.000	.000	.000	.003	.000	.000	.000	.000	.000	.003
44.70	44.70	.000	.000	.000	.000	.000	.000	.000	.000	.000	.000	.000	.000	.000	.000	.000	.000	.000
TOTAL		1.61	1.49	.85	.28	.11	.10	.40	1.55	1.58	.84	.63	.45	.54	.79	1.68	1.83	14.71

WIND MEASURED AT 10.0 METERS
WIND SPEED CORRECTED TO THE RELEASE HEIGHT OF 10.0 METERS.
OVERALL WIND DIRECTION FREQUENCY

WIND DIRECTION:	N	NNE	NE	ENE	E	ESE	SE	SSE	S	SSW	SW	WSW	W	WNW	NW	NNW
FREQUENCY:	7.1	5.6	3.8	1.7	1.2	1.5	4.8	10.2	12.1	8.7	5.8	4.2	4.7	8.3	10.9	9.5

OVERALL WIND SPEED FREQUENCY AS MEASURED ON THE TOWER:

MAX. WIND SPEED (M/S):	.425	1.006	2.034	3.018	4.001	5.029	6.013	8.024	10.036	13.031	18.038	44.704
WIND SPEED FREQUENCY:	3.30	11.42	24.25	19.68	14.73	9.83	6.17	6.61	2.77	1.10	.14	.00

BUILDING AND RELEASE CHARACTERISTICS:
RELEASE HEIGHT: 10.00 METERS
MIXING VOLUME COEFFICIENT: 0.50
BUILDING CROSS-SECTIONAL AREA: 2861.00 SQUARE METERS
THE FIVE-PERCENT-FOR-THE-ENTIRE-SITE χ/Q IS LIMITING.

Table 2.3-28A

Joint Frequency Distribution of Wind Speed and Direction

PLANT NAME: COLUMBIA GENERATING STATION
DATA PERIOD: 1984-1989, AVERAGE HOURLY DATA
TYPE OF RELEASE: GROUND LVL RLS
SOURCE OF DATA: ANNUAL MET DATA COLLECTION 1984-1989
COMMENTS: DATA PROCESSED UNDER-THE SUPPLY SYSTEM QA
PROGRAM: PAVAN, 10/76, 8/79 REVISION, IMPLEMENTATION OF REGULATORY GUIDE 1.145

METEOROLOGICAL INSTRUMENTATION
WIND SENSORS HEIGHT: 10.0 METER
DELTA-T HEIGHTS: 245FT, 33FT

JOINT FREQUENCY DISTRIBUTION OF WIND SPEED AND DIRECTION ATMOSPHERIC STABILITY CLASS A
WIND SPEED (M/S)

TOWER	RELEASE	N	NNE	NE	ENE	E	ESE	SE	SSE	S	SSW	SW	WSW	W	WNW	NW	NNW	TOTAL
0.27	0.27	0.002	0.002	0.002	0.000	0.002	0.000	0.000	0.005	0.005	0.000	0.005	0.002	0.000	0.002	0.005	0.005	0.036
1.34	1.34	0.188	0.102	0.072	0.016	0.038	0.063	0.084	0.138	0.131	0.115	0.100	0.127	0.118	0.129	0.197	0.231	1.850
3.13	3.13	0.460	0.319	0.140	0.025	0.057	0.125	0.226	0.573	0.613	0.312	0.235	0.211	0.136	0.181	0.299	0.410	4.322
5.36	5.36	0.095	0.079	0.052	0.002	0.005	0.005	0.041	0.168	0.389	0.231	0.138	0.109	0.054	0.081	0.111	0.086	1.646
8.05	8.05	0.029	0.061	0.014	0.000	0.000	0.002	0.005	0.034	0.186	0.294	0.213	0.125	0.054	0.104	0.075	0.016	1.211
10.73	10.73	0.000	0.000	0.000	0.000	0.000	0.000	0.000	0.000	0.000	0.009	0.032	0.000	0.007	0.000	0.000	0.002	0.050
11.18	11.18	0.000	0.000	0.000	0.000	0.000	0.000	0.000	0.000	0.000	0.002	0.000	0.000	0.000	0.000	0.000	0.000	0.002
TOTAL		0.77	0.56	0.28	0.04	0.10	0.19	0.36	0.92	1.32	0.96	0.72	0.57	0.37	0.50	0.69	0.75	9.12

JOINT FREQUENCY DISTRIBUTION OF WIND SPEED AND DIRECTION ATMOSPHERIC STABILITY CLASS B
WIND SPEED (M/S)

TOWER	RELEASE	N	NNE	NE	ENE	E	ESE	SE	SSE	S	SSW	SW	WSW	W	WNW	NW	NNW	TOTAL
0.27	0.27	0.000	0.000	0.000	0.000	0.000	0.002	0.000	0.000	0.000	0.002	0.000	0.002	0.000	0.000	0.002	0.000	0.009
1.34	1.34	0.038	0.045	0.014	0.007	0.007	0.020	0.027	0.061	0.041	0.050	0.018	0.036	0.054	0.038	0.059	0.043	0.559
3.13	3.13	0.111	0.061	0.029	0.009	0.007	0.041	0.111	0.172	0.190	0.111	0.063	0.066	0.057	0.059	0.095	0.136	1.318
5.36	5.36	0.018	0.016	0.007	0.000	0.002	0.005	0.014	0.043	0.070	0.104	0.041	0.045	0.016	0.048	0.016	0.038	0.482
8.05	8.05	0.016	0.000	0.002	0.000	0.000	0.000	0.002	0.007	0.045	0.072	0.043	0.063	0.020	0.072	0.018	0.011	0.374
10.73	10.73	0.000	0.000	0.000	0.000	0.000	0.000	0.000	0.000	0.000	0.002	0.000	0.009	0.000	0.005	0.000	0.000	0.016
11.18	11.18	0.000	0.000	0.000	0.000	0.000	0.000	0.000	0.000	0.000	0.000	0.000	0.000	0.000	0.000	0.000	0.000	0.000
TOTAL		0.18	0.12	0.05	0.02	0.02	0.07	0.15	0.28	0.35	0.34	0.17	0.22	0.15	0.22	0.19	0.23	2.76

Table 2.3-28A

Joint Frequency Distribution of Wind Speed and Direction (Continued)

JOINT FREQUENCY DISTRIBUTION OF WIND SPEED AND DIRECTION — ATMOSPHERIC STABILITY CLASS C

TOWER	RELEASE	N	NNE	NE	ENE	E	ESE	SE	SSE	S	SSW	SW	WSW	W	WNW	NW	NNW	TOTAL
0.27	0.27	0.000	0.000	0.002	0.000	0.000	0.000	0.000	0.000	0.000	0.002	0.000	0.002	0.000	0.005	0.000	0.000	0.011
1.34	1.34	0.095	0.059	0.020	0.029	0.020	0.027	0.043	0.102	0.070	0.059	0.079	0.066	0.075	0.100	0.088	0.109	1.041
3.13	3.13	0.177	0.097	0.070	0.032	0.034	0.059	0.143	0.238	0.188	0.161	0.115	0.136	0.102	0.120	0.170	0.179	2.019
5.36	5.36	0.061	0.027	0.014	0.000	0.002	0.009	0.023	0.079	0.154	0.106	0.100	0.095	0.075	0.041	0.045	0.029	0.860
8.05	8.05	0.032	0.005	0.000	0.000	0.002	0.007	0.000	0.020	0.086	0.052	0.054	0.068	0.045	0.091	0.063	0.023	0.548
10.73	10.73	0.000	0.000	0.000	0.000	0.000	0.000	0.000	0.000	0.000	0.005	0.002	0.007	0.000	0.005	0.000	0.000	0.018
11.18	11.18	0.000	0.000	0.000	0.000	0.005	0.000	0.000	0.000	0.000	0.000	0.000	0.000	0.002	0.000	0.000	0.000	0.007
TOTAL		0.36	0.19	0.11	0.06	0.06	0.10	0.21	0.44	0.50	0.38	0.35	0.37	0.30	0.36	0.37	0.34	4.50

JOINT FREQUENCY DISTRIBUTION OF WIND SPEED AND DIRECTION — ATMOSPHERIC STABILITY CLASS D

WIND SPEED (M/S)

TOWER	RELEASE	N	NNE	NE	ENE	E	ESE	SE	SSE	S	SSW	SW	WSW	W	WNW	NW	NNW	TOTAL
0.27	0.27	0.014	0.011	0.005	0.002	0.000	0.002	0.005	0.005	0.002	0.011	0.002	0.016	0.005	0.016	0.011	0.014	0.120
1.34	1.34	0.469	0.267	0.147	0.081	0.093	0.204	0.213	0.287	0.337	0.283	0.263	0.333	0.355	0.448	0.559	0.534	4.874
3.13	3.13	0.623	0.387	0.238	0.095	0.140	0.231	0.441	0.847	0.885	0.627	0.414	0.340	0.407	0.586	0.894	0.996	8.152
5.36	5.36	0.211	0.081	0.038	0.002	0.016	0.048	0.072	0.244	0.414	0.475	0.290	0.201	0.231	0.349	0.240	0.263	3.176
8.05	8.05	0.109	0.052	0.029	0.011	0.011	0.007	0.032	0.068	0.220	0.387	0.283	0.226	0.177	0.387	0.213	0.170	2.381
10.73	10.73	0.000	0.000	0.000	0.000	0.000	0.000	0.000	0.000	0.002	0.032	0.011	0.005	0.005	0.032	0.020	0.009	0.115
11.18	11.18	0.000	0.000	0.000	0.000	0.000	0.000	0.000	0.000	0.000	0.000	0.005	0.002	0.002	0.007	0.005	0.000	0.020
TOTAL		1.42	0.80	0.46	0.19	0.26	0.49	0.76	1.45	1.86	1.82	1.27	1.12	1.18	1.82	1.94	1.99	18.84

Table 2.3-28A

Joint Frequency Distribution of Wind Speed and Direction (Continued)

JOINT FREQUENCY DISTRIBUTION OF WIND SPEED AND DIRECTION — ATMOSPHERIC STABILITY CLASS E

WIND SPEED (M/S)

TOWER	RELEASE	N	NNE	NE	ENE	E	ESE	SE	SSE	S	SSW	SW	WSW	W	WNW	NW	NNW	TOTAL
0.27	0.27	0.016	0.009	0.014	0.014	0.000	0.020	0.011	0.020	0.011	0.020	0.036	0.009	0.014	0.054	0.034	0.043	0.326
1.34	1.34	0.808	0.521	0.328	0.134	0.154	0.285	0.421	0.521	0.738	0.700	0.616	0.718	0.786	1.035	1.184	1.050	9.997
3.13	3.13	0.754	0.552	0.494	0.158	0.168	0.412	0.840	1.720	1.684	1.252	0.912	0.810	0.998	1.648	1.813	1.410	15.627
5.36	5.36	0.125	0.070	0.027	0.034	0.011	0.018	0.127	0.392	0.632	0.580	0.369	0.274	0.441	0.706	0.496	0.310	4.611
8.05	8.05	0.043	0.050	0.005	0.000	0.002	0.000	0.054	0.170	0.396	0.552	0.292	0.177	0.235	0.480	0.303	0.152	2.911
10.73	10.73	0.000	0.000	0.000	0.000	0.000	0.000	0.000	0.000	0.009	0.059	0.016	0.002	0.011	0.016	0.007	0.000	0.120
11.18	11.18	0.000	0.000	0.000	0.000	0.000	0.000	0.000	0.000	0.000	0.002	0.000	0.011	0.000	0.000	0.000	0.000	0.014
TOTAL		1.75	1.20	0.87	0.34	0.34	0.74	1.45	2.82	3.47	3.16	2.24	2.00	2.49	3.94	3.84	2.97	33.61

JOINT FREQUENCY DISTRIBUTION OF WIND SPEED AND DIRECTION — ATMOSPHERIC STABILITY CLASS F

WIND SPEED (M/S)

TOWER	RELEASE	N	NNE	NE	ENE	E	ESE	SE	SSE	S	SSW	SW	WSW	W	WNW	NW	NNW	TOTAL
0.27	0.27	0.016	0.011	0.005	0.014	0.005	0.009	0.007	0.009	0.018	0.011	0.027	0.020	0.029	0.034	0.014	0.023	0.251
1.34	1.34	0.752	0.552	0.278	0.131	0.100	0.190	0.333	0.550	0.629	0.557	0.537	0.494	0.552	0.772	1.050	1.021	8.498
3.13	3.13	0.441	0.274	0.285	0.104	0.070	0.152	0.573	1.288	1.320	0.643	0.430	0.432	0.405	0.815	1.148	0.747	9.128
5.36	5.36	0.000	0.005	0.009	0.009	0.005	0.005	0.066	0.240	0.242	0.179	0.070	0.034	0.088	0.195	0.113	0.025	1.284
8.05	8.05	0.000	0.000	0.002	0.000	0.000	0.000	0.036	0.079	0.079	0.052	0.020	0.023	0.018	0.050	0.045	0.000	0.405
10.73	10.73	0.000	0.000	0.000	0.000	0.000	0.000	0.000	0.005	0.000	0.005	0.002	0.000	0.000	0.000	0.000	0.000	0.011
11.18	11.18	0.000	0.000	0.000	0.000	0.000	0.000	0.000	0.000	0.000	0.005	0.000	0.000	0.000	0.000	0.018	0.014	0.036
TOTAL		1.21	0.84	0.58	0.26	0.18	0.36	1.01	2.17	2.29	1.45	1.09	1.00	1.09	1.87	2.39	1.83	19.61

Table 2.3-28A

Joint Frequency Distribution of Wind Speed and Direction (Continued)

JOINT FREQUENCY DISTRIBUTION OF WIND SPEED AND DIRECTION — ATMOSPHERIC STABILITY CLASS G

WIND SPEED (M/S)

TOWER	RELEASE	N	NNE	NE	ENE	E	ESE	SE	SSE	S	SSW	SW	WSW	W	WNW	NW	NNW	TOTAL
0.27	0.27	0.016	0.005	0.007	0.005	0.005	0.011	0.014	0.007	0.009	0.014	0.016	0.014	0.007	0.009	0.020	0.027	0.183
1.34	1.34	0.790	0.686	0.303	0.174	0.091	0.111	0.213	0.385	0.392	0.310	0.267	0.287	0.299	0.473	0.654	0.822	6.257
3.13	3.13	0.312	0.292	0.240	0.084	0.023	0.059	0.272	0.869	0.645	0.310	0.174	0.104	0.115	0.267	0.453	0.450	4.670
5.36	5.36	0.007	0.002	0.029	0.005	0.000	0.007	0.011	0.075	0.050	0.014	0.011	0.005	0.005	0.020	0.018	0.000	0.258
8.05	8.05	0.002	0.009	0.005	0.000	0.000	0.000	0.000	0.014	0.011	0.007	0.000	0.002	0.000	0.005	0.000	0.000	0.054
10.73	10.73	0.000	0.000	0.000	0.000	0.000	0.000	0.000	0.000	0.011	0.005	0.000	0.000	0.000	0.000	0.000	0.000	0.016
11.18	11.18	0.032	0.032	0.032	0.023	0.000	0.000	0.000	0.000	0.000	0.000	0.000	0.000	0.000	0.000	0.000	0.007	0.125
TOTAL		1.16	1.03	0.62	0.29	0.12	0.19	0.51	1.35	1.12	0.66	0.47	0.41	0.43	0.77	1.15	1.31	11.56

WIND MEASURED AT 10.0 METERS
WIND SPEED CORRECTED TO THE RELEASE HEIGHT OF 10.0 METERS.
OVERALL WIND DIRECTION FREQUENCY

WIND DIRECTION:	N	NNE	NE	ENE	E	ESE	SE	SSE	S	SSW	SW	WSW	W	WNW	NW	NNW
FREQUENCY:	6.9	4.7	3.0	1.2	1.1	2.1	4.5	9.4	10.9	8.8	6.3	5.7	6.0	9.5	10.6	9.4

OVERALL WIND SPEED FREQUENCY AS MEASURED ON THE TOWER:

MAX. WIND SPEED (M/S):	0.268	1.341	3.129	5.364	8.047	10.729	11.176
WIND SPEED FREQUENCY:	0.94	33.08	45.23	12.32	7.88	0.35	0.20

BUILDING AND RELEASE CHARACTERISTICS:
RELEASE HEIGHT: 10.00 METERS
MIXING VOLUME COEFFICIENT: 0.50
BUILDING CROSS-SECTIONAL AREA: 2766.00 SQUARE METERS
THE FIVE-PERCENT-FOR-THE-ENTIRE-SITE χ/Q IS LIMITING.

TABLE 2.3-29
THROUGH
TABLE 2.3-32

DELETED

Table 2.3-33

Exclusion Area Boundary Accident χ/Q Desert Sigmas

PLANT NAME: CGS
DATA PERIOD: JFD 1996-1999
TYPE OF RELEASE: GROUND LEVEL RELEASE
METEOROLOGICAL INSTRUMENTATION
WIND SENSORS HEIGHT: 10.0 METERS
DELTA-T HEIGHTS: 10 - 75 METERS
SOURCE OF DATA: CGS ONSITE MET DATA TAKEN FROM FRAMATOME JFD FILES FOR 96-99
COMMENTS: input file: P96-99-F.inp output file: P96-99-F.out
PROGRAM: PAVAN, 10/76, 8/79 REVISION, IMPLEMENTATION OF REGULATORY GUIDE 1.145, REVISION 1

RELATIVE CONCENTRATION (χ/Q) VALUES (SEC/CUBIC METER) VERSUS AVERAGING TIME

DOWNWIND SECTOR	DISTANCE (METERS)	0-2 HOURS	0-8 HOURS	8-24 HOURS	1-4 DAYS	4-30 DAYS	ANNUAL AVERAGE	HOURS PER YEAR MAX 0-2 HR χ/Q IS EXCEEDED IN SECTOR	DOWWIND SECTOR
S	1950.	1.68E-04	1.08E-04	8.69E-05	5.39E-05	2.71E-05	1.17E-05	38.6	S
SSW	1950.	1.61E-04	1.02E-04	8.16E-05	5.00E-05	2.48E-05	1.05E-05	389.5	SSW
SW	1950.	1.13E-04	7.01E-05	5.51E-05	3.27E-05	1.55E-05	6.20E-06	22.0	SW
WSW	1950.	5.62E-05	3.38E-05	2.63E-05	1.51E-05	6.88E-06	2.62E-06	10.4	WSW
W	1950.	2.88E-05	1.80E-05	1.42E-05	8.52E-06	4.09E-06	1.67E-06	7.6	W
WNW	1950.	3.14E-05	1.94E-05	1.53E-05	9.06E-06	4.29E-06	1.72E-06	7.5	WNW
NW	1950.	7.22E-05	4.41E-05	3.45E-05	2.02E-05	9.39E-06	3.67E-06	10.0	NW
NNW	1950.	1.19E-04	7.70E-05	6.20E-05	3.87E-05	1.97E-05	8.64E-06	20.3	NNW
N	1950.	1.30E-04	8.49E-05	6.86E-05	4.32E-05	2.23E-05	9.87E-06	23.5	N
NNE	1950.	1.09E-04	6.85E-05	5.45E-05	3.31E-05	1.62E-05	6.73E-06	17.9	NNE
NE	1950.	1.20E-04	7.40E-05	5.81E-05	3.44E-05	1.62E-05	6.46E-06	23.8	NE
ENE	1950.	1.14E-04	6.94E-05	5.41E-05	3.16E-05	1.46E-05	5.66E-06	22.7	ENE
E	1950.	1.25E-04	7.65E-05	6.00E-05	3.53E-05	1.65E-05	6.50E-06	25.1	E
ESE	1950.	1.39E-04	8.76E-05	6.94E-05	4.20E-05	2.04E-05	8.41E-06	27.9	ESE
SE	1950.	1.59E-04	1.04E-04	8.44E-05	5.34E-05	2.77E-05	1.24E-05	34.5	SE
SSE	1950.	1.81E-04	1.18E-04	9.52E-05	5.98E-05	3.07E-05	1.36E-05	43.7	SSE
MAX χ/Q		1.81E-04				TOTAL HOURS AROUND SITE:		724.9	
SRP 2.3.4	1950.	1.69E-04	1.12E-04	9.06E-05	5.76E-05	3.01E-05	1.36E-05		
SITE LIMIT		1.69E-04	1.12E-04	9.06E-05	5.76E-05	3.01E-05	1.36E-05		

THE FIVE-PERCENT-FOR-THE-ENTIRE-SITE χ/Q IS LIMITING.

Table 2.3-33a

Exclusion Area Boundary χ/Q Values
Desert Sigmas w/ Meander

Direction From Site	0.5% Level[a] (10^{-4} sec/m^3)	5% Level[b] (10^{-4} sec/m^3)
S	1.68	2.04
SSW	1.61	2.26
SW	1.13	2.13
WSW	0.562	2.20
W	0.288	2.19
WNW	0.314	1.93
NW	0.722	1.17
NNW	1.19	1.18
N	1.30	1.17
NNE	1.09	1.18
NE	1.20	1.74
ENE	1.14	2.03
E	1.25	2.00
ESE	1.39	1.58
SE	1.59	1.52
SSE	1.81	1.86

[a] Exceeded 0.5% of the total time.

[b] Exceeded 5% of the time that wind blows into the individual sector.

Table 2.3-34

Exclusion Area Boundary Accident χ/Q P-G Sigmas

PLANT NAME: CGS
DATA PERIOD: JFD 1996-1999
TYPE OF RELEASE: GROUND LEVEL RELEASE
METEOROLOGICAL INSTRUMENTATION
WIND SENSORS HEIGHT: 10.0 METERS
DELTA-T HEIGHTS: 10 - 75 METERS
SOURCE OF DATA: CGS ONSITE MET DATA TAKEN FROM FRAMATOME JFD FILES FOR 96-99
COMMENTS: input file: P96-99-F.inp output file: P96-99-F.out
PROGRAM: PAVAN, 10/76, 8/79 REVISION, IMPLEMENTATION OF REGULATORY GUIDE 1.145, REVISION 1

RELATIVE CONCENTRATION (χ/Q) VALUES (SEC/CUBIC METER) VERSUS AVERAGING TIME

DOWNWIND SECTOR	DISTANCE (METERS)	0-2 HOURS	0-8 HOURS	8-24 HOURS	1-4 DAYS	4-30 DAYS	ANNUAL AVERAGE	HOURS PER YEAR MAX 0-2 HR χ/Q IS EXCEEDED IN SECTOR	DOWWIND SECTOR
S	1950.	1.67E-04	8.92E-05	6.53E-05	3.32E-05	1.25E-05	3.82E-06	38.9	S
SSW	1950.	1.59E-04	8.36E-05	6.06E-05	3.01E-05	1.10E-05	3.23E-06	385.6	SSW
SW	1950.	1.15E-04	5.89E-05	4.21E-05	2.04E-05	7.20E-06	2.01E-06	21.0	SW
WSW	1950.	5.48E-05	2.81E-05	2.01E-05	9.75E-06	3.45E-06	9.65E-07	8.6	WSW
W	1950.	2.52E-05	1.39E-05	1.03E-05	5.39E-06	2.12E-06	6.80E-07	6.1	W
WNW	1950.	2.85E-05	1.54E-05	1.13E-05	5.80E-06	2.22E-06	6.87E-07	6.3	WNW
NW	1950.	7.40E-05	3.92E-05	2.85E-05	1.43E-05	5.29E-06	1.57E-06	9.2	NW
NNW	1950.	1.30E-04	7.05E-05	5.20E-05	2.68E-05	1.04E-05	3.24E-06	22.8	NNW
N	1950.	1.38E-04	7.60E-05	5.65E-05	2.97E-05	1.18E-05	3.81E-06	25.5	N
NNE	1950.	1.08E-04	5.86E-05	4.31E-05	2.22E-05	8.56E-06	2.67E-06	17.2	NNE
NE	1950.	1.09E-04	5.81E-05	4.24E-05	2.15E-05	8.07E-06	2.44E-06	19.9	NE
ENE	1950.	1.01E-04	5.32E-05	3.87E-05	1.94E-05	7.19E-06	2.14E-06	18.9	ENE
E	1950.	1.10E-04	5.87E-05	4.29E-05	2.17E-05	8.18E-06	2.47E-06	20.7	E
ESE	1950.	1.24E-04	6.83E-05	5.07E-05	2.65E-05	1.05E-05	3.37E-06	23.2	ESE
SE	1950.	1.59E-04	8.86E-05	6.61E-05	3.51E-05	1.41E-05	4.63E-06	35.2	SE
SSE	1950.	1.77E-04	9.68E-05	7.16E-05	3.72E-05	1.45E-05	4.59E-06	43.7	SSE
MAX χ/Q		1.77E-04					TOTAL HOURS AROUND SITE:	702.8	
SRP 2.3.4	1950.	2.86E-04	1.45E-04	1.03E-04	4.91E-05	1.70E-05	4.63E-06		
SITE LIMIT		1.65E-04	9.16E-05	6.82E-05	3.59E-05	1.43E-05	4.63E-06		

THE FIVE-PERCENT-FOR-THE-ENTIRE-SITE χ/Q IS LIMITING.

Table 2.3-34a

Exclusion Area Boundary χ/Q Values
Pasquill-Gifford Sigmar w/ Meander and Building Wake Credit

Direction From Site	0.5% Level[a] (10^{-4} sec/m^3)	5% Level[b] (10^{-4} sec/m^3)
S	1.67	1.99
SSW	1.59	2.18
SW	1.15	2.02
WSW	0.548	1.96
W	0.252	1.93
WNW	0.285	1.71
NW	0.740	1.14
NNW	1.30	1.29
N	1.38	1.25
NNE	1.08	1.17
NE	1.09	1.53
ENE	1.01	1.80
E	1.10	1.77
ESE	1.24	1.38
SE	1.59	1.52
SSE	1.77	1.82

[a] Exceeded 0.5% of the total time.

[b] Exceeded 5% of the time that wind blows into the individual sector.

Table 2.3-35

Low Population Zone Accident χ/Q Desert Sigmas

PLANT NAME: CGS
DATA PERIOD: JFD 1996-1999
TYPE OF RELEASE: GROUND LEVEL RELEASE
METEOROLOGICAL INSTRUMENTATION
WIND SENSORS HEIGHT: 10.0 METERS
DELTA-T HEIGHTS: 10 - 75 METERS
SOURCE OF DATA: CGS ONSITE MET DATA TAKEN FROM FRAMATOME JFD FILES FOR 96-99
COMMENTS: input file: P96-99-F.inp output file: P96-99-F.out
PROGRAM: PAVAN, 10/76, 8/79 REVISION, IMPLEMENTATION OF REGULATORY GUIDE 1.145, REVISION 1

RELATIVE CONCENTRATION (χ/Q) VALUES (SEC/CUBIC METER) VERSUS AVERAGING TIME

DOWNWIND SECTOR	DISTANCE (METERS)	0-2 HOURS	0-8 HOURS	8-24 HOURS	1-4 DAYS	4-30 DAYS	ANNUAL AVERAGE	HOURS PER YEAR MAX 0-2 HR χ/Q IS EXCEEDED IN SECTOR	DOWNWIND SECTOR
S	4827.	8.35E-05	4.58E-05	3.39E-05	1.76E-05	6.92E-06	2.20E-06	39.1	S
SSW	4827.	7.96E-05	4.33E-05	3.19E-05	1.64E-05	6.36E-06	1.99E-06	364.8	SSW
SW	4827.	5.52E-05	2.92E-05	2.12E-05	1.06E-05	3.94E-06	1.17E-06	22.2	SW
WSW	4827.	2.18E-05	1.16E-05	8.48E-06	4.28E-06	1.61E-06	4.85E-07	9.8	WSW
W	4827.	7.98E-06	4.64E-06	3.54E-06	1.97E-06	8.46E-07	3.02E-07	7.0	W
WNW	4827.	8.94E-06	5.13E-06	3.89E-06	2.13E-06	8.96E-07	3.11E-07	7.2	WNW
NW	4827.	2.94E-05	1.57E-05	1.15E-05	5.81E-06	2.19E-06	6.61E-07	9.1	NW
NNW	4827.	5.22E-05	2.93E-05	2.20E-05	1.17E-05	4.78E-06	1.59E-06	18.0	NNW
N	4827.	5.78E-05	3.26E-05	2.45E-05	1.31E-05	5.38E-06	1.80E-06	21.1	N
NNE	4827.	5.01E-05	2.71E-05	1.99E-05	1.03E-05	3.95E-06	1.23E-06	16.7	NNE
NE	4827.	5.49E-05	2.92E-05	2.12E-05	1.07E-05	3.98E-06	1.19E-06	22.7	NE
ENE	4827.	5.04E-05	2.66E-05	1.93E-05	9.60E-06	3.53E-06	1.04E-06	21.6	ENE
E	4827.	5.66E-05	2.99E-05	2.17E-05	1.09E-05	4.02E-06	1.19E-06	23.7	E
ESE	4827.	6.26E-05	3.39E-05	2.50E-05	1.28E-05	4.94E-06	1.54E-06	25.3	ESE
SE	4827.	7.62E-05	4.27E-05	3.20E-05	1.70E-05	6.91E-06	2.29E-06	33.4	SE
SSE	4827.	8.91E-05	4.95E-05	3.69E-05	1.95E-05	7.81E-06	2.55E-06	43.7	SSE
MAX χ/Q		8.91E-05				TOTAL HOURS AROUND SITE:		685.7	
SRP 2.3.4	4827.	7.96E-05	4.51E-05	3.39E-05	1.83E-05	7.54E-06	2.55E-06		
SITE LIMIT		7.96E-05	4.51E-05	3.39E-05	1.83E-05	7.54E-06	2.55E-06		

THE FIVE-PERCENT-FOR-THE-ENTIRE-SITE χ/Q IS LIMITING.

Table 2.3-36

Low Population Zone Accident χ/Q P-G Sigmas

PLANT NAME: CGS
DATA PERIOD: JFD 1996-1999
TYPE OF RELEASE: GROUND LEVEL RELEASE
METEOROLOGICAL INSTRUMENTATION
WIND SENSORS HEIGHT: 10.0 METERS
DELTA-T HEIGHTS: 10 - 75 METERS
SOURCE OF DATA: CGS ONSITE MET DATA TAKEN FROM FRAMATOME JFD FILES FOR 96-99
COMMENTS: input file: P96-99-F.inp output file: P96-99-F.out
PROGRAM: PAVAN, 10/76, 8/79 REVISION, IMPLEMENTATION OF REGULATORY GUIDE 1.145, REVISION 1

RELATIVE CONCENTRATION (χ/Q) VALUES (SEC/CUBIC METER) VERSUS AVERAGING TIME

DOWNWIND SECTOR	DISTANCE (METERS)	0-2 HOURS	0-8 HOURS	8-24 HOURS	1-4 DAYS	4-30 DAYS	ANNUAL AVERAGE	HOURS PER YEAR MAX 0-2 HR χ/Q IS EXCEEDED IN SECTOR	DOWNWIND SECTOR
S	4827.	7.65E-05	3.43E-05	2.30E-05	9.64E-06	2.77E-06	6.01E-07	38.9	S
SSW	4827.	7.30E-05	3.21E-05	2.13E-05	8.74E-06	2.43E-06	5.08E-07	379.7	SSW
SW	4827.	5.16E-05	2.22E-05	1.46E-05	5.85E-06	1.57E-06	3.16E-07	20.9	SW
WSW	4827.	2.17E-05	9.52E-06	6.31E-06	2.59E-06	7.19E-07	1.50E-07	9.2	WSW
W	4827.	8.35E-06	4.05E-06	2.83E-06	1.29E-06	4.19E-07	1.06E-07	6.5	W
WNW	4827.	9.39E-06	4.48E-06	3.10E-06	1.39E-06	4.38E-07	1.07E-07	6.7	WNW
NW	4827.	3.16E-05	1.42E-05	9.49E-06	3.97E-06	1.14E-06	2.46E-07	9.1	NW
NNW	4827.	5.63E-05	2.59E-05	1.76E-05	7.56E-06	2.25E-06	5.13E-07	21.4	NNW
N	4827.	6.01E-05	2.81E-05	1.92E-05	8.42E-06	2.58E-06	6.05E-07	24.0	N
NNE	4827.	4.77E-05	2.18E-05	1.48E-05	6.32E-06	1.87E-06	4.21E-07	16.8	NNE
NE	4827.	4.98E-05	2.23E-05	1.49E-05	6.22E-06	1.78E-06	3.84E-07	21.1	NE
ENE	4827.	4.56E-05	2.03E-05	1.35E-05	5.62E-06	1.59E-06	3.40E-07	20.1	ENE
E	4827.	5.08E-05	2.28E-05	1.52E-05	6.37E-06	1.82E-06	3.94E-07	22.1	E
ESE	4827.	5.64E-05	2.61E-05	1.78E-05	7.71E-06	2.32E-06	5.36E-07	23.6	ESE
SE	4827.	7.21E-05	3.38E-05	2.31E-05	1.02E-05	3.12E-06	7.35E-07	34.6	SE
SSE	4827.	8.17E-05	3.74E-05	2.53E-05	1.08E-05	3.21E-06	7.24E-07	43.7	SSE
MAX χ/Q		8.17E-05					TOTAL HOURS AROUND SITE:	698.5	
SRP 2.3.4	4827.	1.15E-04	4.99E-05	3.28E-05	1.33E-05	3.61E-06	7.35E-07		
SITE LIMIT		7.53E-05	3.50E-05	2.39E-05	1.04E-05	3.16E-06	7.35E-07		

THE FIVE-PERCENT-FOR-THE-ENTIRE-SITE χ/Q IS LIMITING.

Table 2.3-37

Control Room, Exclusion Area Boundary and Low Population Zone χ/Qs (S/m^3)

	Control Room[1]								LPZ[2]	EAB[2]
	Filtered				Unfiltered					
	SGT Roofline	Railway Bay doors SC Leakage	RBW SC Leakage	Turbine Building	SGT Roofline	Railway Bay doors SC Leakage	RBW SC Leakage	Turbine Building		
0 - 2 hrs	1.43E-04	3.65E-04	1.99E-04	8.81E-04	6.95E-04	5.34E-04	8.69E-04	4.70E-03	4.95E-05	1.81E-04
2 - 8 hrs	1.05E-04	2.89E-04	1.44E-04	3.75E-04	3.36E-04	1.97E-04	4.40E-04	2.00E-03	4.95E-05	
8 - 24 hrs	4.14E-05	1.18E-04	5.73E-05	1.93E-04	1.28E-04	8.41E-05	1.75E-04	1.03E-03	3.69E-05	
1 - 4 days	3.52E-05	9.83 E-05	5.00E-05	1.50E-04	9.72E-05	7.26E-05	1.38E-04	8.01E-04	1.95E-05	
4 - 30 days	3.03E-05	8.61E-05	4.18E-05	1.44E-04	7.69E-05	7.00E-05	1.10E-04	7.69E-04	7.81E-06	

(1) Reference 2.3-37
(2) Reference 2.3-38

NOTE: EAB = Exclusion Area Boundary
LPZ = Low Population Zone
SGT = Standby Gas Treatment
SC = Secondary Containment
RBW = Reactor Building Wall

Table 2.3-38a

CGS Calculation, Terrain Features, Desert Sigmas

CGS TURBINE AND RADWASTE BLDGS
NO DECAY, UNDEPLETED
CORRECTED USING STANDARD OPEN TERRAIN FACTORS

ANNUAL AVERAGE CHI/Q (SEC/METER CUBED)					DISTANCE IN MILES FROM THE SITE						
SECTOR	0.250	0.500	0.750	1.000	1.500	2.000	2.500	3.000	3.500	4.000	4.500
S	1.170E-04	4.880E-05	2.943E-05	1.612E-05	7.145E-06	4.144E-06	2.767E-06	2.013E-06	1.551E-06	1.246E-06	1.031E-06
SSW	8.738E-05	3.691E-05	2.243E-05	1.234E-05	5.502E-06	3.204E-06	2.146E-06	1.565E-06	1.208E-06	9.718E-07	8.058E-07
SW	5.041E-05	2.119E-05	1.282E-05	7.028E-06	3.117E-06	1.808E-06	1.207E-06	8.781E-07	6.766E-07	5.432E-07	4.497E-07
WSW	2.672E-05	1.129E-05	6.851E-06	3.769E-06	1.679E-06	9.761E-07	6.527E-07	4.753E-07	3.666E-07	2.945E-07	2.439E-07
W	1.743E-05	7.139E-06	4.257E-06	2.314E-06	1.015E-06	5.849E-07	3.886E-07	2.817E-07	2.164E-07	1.733E-07	1.431E-07
WNW	3.424E-05	1.390E-05	8.233E-06	4.450E-06	1.936E-06	1.109E-06	7.331E-07	5.293E-07	4.053E-07	3.237E-07	2.667E-07
NW	5.972E-05	2.452E-05	1.463E-05	7.962E-06	3.496E-06	2.014E-06	1.337E-06	9.689E-07	7.440E-07	5.955E-07	4.917E-07
NNW	1.094E-04	4.499E-05	2.691E-05	1.468E-05	6.471E-06	3.738E-06	2.487E-06	1.805E-06	1.388E-06	1.112E-06	9.193E-07
N	1.148E-04	4.680E-05	2.783E-05	1.514E-05	6.639E-06	3.821E-06	2.536E-06	1.836E-06	1.409E-06	1.128E-06	9.305E-07
NNE	9.052E-05	3.669E-05	2.171E-05	1.174E-05	5.115E-06	2.930E-06	1.937E-06	1.399E-06	1.071E-06	8.551E-07	7.045E-07
NE	7.851E-05	3.196E-05	1.896E-05	1.029E-05	4.493E-06	2.578E-06	1.706E-06	1.233E-06	9.443E-07	7.543E-07	6.216E-07
ENE	7.545E-05	3.053E-05	1.805E-05	9.773E-06	4.260E-06	2.442E-06	1.615E-06	1.167E-06	8.935E-07	7.136E-07	5.881E-07
E	8.001E-05	3.243E-05	1.917E-05	1.038E-05	4.517E-06	2.585E-06	1.708E-06	1.232E-06	9.420E-07	7.514E-07	6.185E-07
ESE	1.238E-04	5.040E-05	2.986E-05	1.617E-05	7.040E-06	4.029E-06	2.662E-06	1.920E-06	1.469E-06	1.172E-06	9.644E-07
SE	1.508E-04	6.203E-05	3.703E-05	2.016E-05	8.853E-06	5.097E-06	3.383E-06	2.449E-06	1.879E-06	1.503E-06	1.241E-06
SSE	1.535E-04	6.378E-05	3.835E-05	2.097E-05	9.262E-06	5.358E-06	3.569E-06	2.593E-06	1.995E-06	1.600E-06	1.323E-06

ANNUAL AVERAGE CHI/Q (SEC/METER CUBED)					DISTANCE IN MILES FROM THE SITE						
SECTOR	5.000	7.500	10.000	15.000	20.000	25.000	30.000	35.000	40.000	45.000	50.000
S	8.745E-07	4.911E-07	3.377E-07	2.095E-07	1.494E-07	1.150E-07	9.290E-08	7.760E-08	6.641E-08	5.789E-08	5.121E-08
SSW	6.840E-07	3.859E-07	2.662E-07	1.658E-07	1.186E-07	9.147E-08	7.402E-08	6.191E-08	5.304E-08	4.628E-08	4.097E-08
SW	3.812E-07	2.140E-07	1.471E-07	9.121E-08	6.504E-08	5.005E-08	4.042E-08	3.376E-08	2.889E-08	2.518E-08	2.227E-08
WSW	2.068E-07	1.162E-07	7.994E-08	4.960E-08	3.536E-08	2.721E-08	2.197E-08	1.835E-08	1.570E-08	1.368E-08	1.209E-08
W	1.211E-07	6.750E-08	4.618E-08	2.846E-08	2.021E-08	1.550E-08	1.249E-08	1.041E-08	8.897E-09	7.744E-09	6.841E-09
WNW	2.252E-07	1.245E-07	8.474E-08	5.184E-08	3.662E-08	2.799E-08	2.249E-08	1.870E-08	1.595E-08	1.386E-08	1.222E-08
NW	4.159E-07	2.313E-07	1.580E-07	9.714E-08	6.883E-08	5.272E-08	4.242E-08	3.532E-08	3.014E-08	2.621E-08	2.314E-08
NNW	7.782E-07	4.434E-07	2.973E-07	1.832E-07	1.301E-07	9.973E-08	8.032E-08	6.692E-08	5.714E-08	4.927E-08	4.390E-08
N	7.867E-07	4.368E-07	2.979E-07	1.827E-07	1.292E-07	9.881E-08	7.940E-08	6.604E-08	5.630E-08	4.892E-08	4.314E-08
NNE	5.948E-07	3.285E-07	2.234E-07	1.364E-07	9.622E-08	7.345E-08	5.895E-08	4.898E-08	4.172E-08	3.623E-08	3.193E-08
NE	5.248E-07	2.900E-07	1.972E-07	1.204E-07	8.490E-08	6.478E-08	5.196E-08	4.316E-08	3.675E-08	3.189E-08	2.810E-08
ENE	4.965E-07	2.744E-07	1.866E-07	1.140E-07	8.045E-08	6.141E-08	4.929E-08	4.095E-08	3.489E-08	3.029E-08	2.670E-08
E	5.217E-07	2.872E-07	1.947E-07	1.184E-07	8.330E-08	6.343E-08	5.080E-08	4.214E-08	3.584E-08	3.108E-08	2.736E-08
ESE	8.135E-07	4.479E-07	3.038E-07	1.849E-07	1.301E-07	9.912E-08	7.942E-08	6.590E-08	5.607E-08	4.863E-08	4.282E-08
SE	1.049E-06	5.821E-07	3.970E-07	2.435E-07	1.722E-07	1.317E-07	1.059E-07	8.809E-08	7.511E-08	6.527E-08	5.757E-08
SSE	1.120E-06	6.263E-07	4.294E-07	2.653E-07	1.886E-07	1.448E-07	1.168E-07	9.740E-08	8.325E-08	7.248E-08	6.405E-08

Table 2.3-38b

CGS Calculation, Terrain Features, Desert Sigmas

CGS TURBINE AND RADWASTE BLDGS
NO DECAY, UNDEPLETED
CHI/Q (SEC/METER CUBED) FOR EACH SEGMENT

	SEGMENT BOUNDARIES IN MILES FROM THE SITE									
DIRECTION FROM SITE	.5-1	1-2	2-3	3-4	4-5	5-10	10-20	20-30	30-40	40-50
S	2.782E-05	7.806E-06	2.832E-06	1.567E-06	1.037E-06	5.081E-07	2.113E-07	1.153E-07	7.771E-08	5.794E-08
SSW	2.117E-05	6.000E-06	2.195E-06	1.220E-06	8.099E-07	3.989E-07	1.671E-07	9.172E-08	6.199E-08	4.631E-08
SW	1.211E-05	3.404E-06	1.236E-06	6.834E-07	4.521E-07	2.214E-07	9.199E-08	5.019E-08	3.381E-08	2.520E-08
WSW	6.468E-06	1.831E-06	6.680E-07	3.702E-07	2.451E-07	1.202E-07	5.001E-08	2.729E-08	1.837E-08	1.369E-08
W	4.034E-06	1.113E-06	3.982E-07	2.186E-07	1.439E-07	6.994E-08	2.873E-08	1.555E-08	1.043E-08	7.751E-09
WNW	7.812E-06	2.127E-06	7.518E-07	4.096E-07	2.682E-07	1.292E-07	5.239E-08	2.809E-08	1.873E-08	1.387E-08
NW	1.386E-05	3.830E-06	1.370E-06	7.517E-07	4.944E-07	2.397E-07	9.809E-08	5.290E-08	3.538E-08	2.624E-08
NNW	2.549E-05	7.081E-06	2.548E-06	1.402E-06	9.242E-07	4.498E-07	1.849E-07	1.001E-07	6.703E-08	4.976E-08
N	2.640E-05	7.275E-06	2.599E-06	1.424E-06	9.356E-07	4.528E-07	1.845E-07	9.915E-08	6.615E-08	4.897E-08
NNE	2.061E-05	5.617E-06	1.986E-06	1.082E-06	7.085E-07	3.410E-07	1.379E-07	7.372E-08	4.906E-08	3.626E-08
NE	1.800E-05	4.929E-06	1.749E-06	9.543E-07	6.251E-07	3.009E-07	1.217E-07	6.502E-08	4.323E-08	3.193E-08
ENE	1.715E-05	4.677E-06	1.656E-06	9.030E-07	5.914E-07	2.848E-07	1.152E-07	6.164E-08	4.103E-08	3.032E-08
E	1.821E-05	4.961E-06	1.751E-06	9.521E-07	6.221E-07	2.982E-07	1.198E-07	6.368E-08	4.221E-08	3.111E-08
ESE	2.834E-05	7.730E-06	2.730E-06	1.484E-06	9.699E-07	4.651E-07	1.870E-07	9.951E-08	6.602E-08	4.868E-08
SE	3.509E-05	9.967E-06	3.466E-06	1.899E-06	1.247E-06	6.035E-07	2.459E-07	1.322E-07	8.823E-08	6.534E-08
SSE	3.628E-05	1.013E-05	3.656E-06	2.015E-06	1.330E-06	6.485E-07	2.677E-07	1.453E-07	9.755E-08	7.255E-08

Table 2.3-38c

CGS Calculation, Terrain Features, Desert Sigmas

CGS TURBINE AND RADWASTE BLDGS – SPECIFIC POINTS OF INTEREST

RELEASE ID	TYPE OF LOCATION	DIRECTION FROM SITE	DISTANCE (MILES)	DISTANCE (METERS)	X/Q (SEC/CUB.METER) NO DECAY UNDEPLETED	X/Q (SEC/CUB.METER) 2.260 DAY DECAY UNDEPLETED	X/Q (SEC/CUB.METER) 8.000 DAY DECAY DEPLETED	D/Q (PER SQ.METER)
A	PROTECTED ARE	SE	6.40	10298.	7.2E-07	6.8E-07	5.1E-07	2.6E-10
A	PROTECTED ARE	ESE	3.90	6275.	1.2E-06	1.2E-06	9.3E-07	7.0E-10
A	PROTECTED ARE	ESE	4.00	6436.	1.2E-06	1.1E-06	8.9E-07	6.6E-10
A	PROTECTED ARE	ESE	4.10	6597.	1.1E-06	1.1E-06	8.5E-07	6.3E-10
A	PROTECTED ARE	ESE	4.20	6758.	1.1E-06	1.0E-06	8.1E-07	6.0E-10
A	PROTECTED ARE	ESE	4.30	6919.	1.0E-06	1.0E-06	7.8E-07	5.7E-10
A	PROTECTED ARE	ESE	4.40	7080.	1.0E-06	9.6E-07	7.5E-07	5.4E-10
A	PROTECTED ARE	ESE	4.50	7241.	9.6E-07	9.2E-07	7.2E-07	5.1E-10
A	PROTECTED ARE	ESE	3.00	4827.	1.9E-06	1.9E-06	1.5E-06	1.3E-09
A	PROTECTED ARE	ESE	3.10	4988.	1.8E-06	1.8E-06	1.4E-06	1.2E-09
A	PROTECTED ARE	ESE	3.21	5159.	1.7E-06	1.7E-06	1.3E-06	1.1E-09
A	PROTECTED ARE	ESE	3.30	5310.	1.6E-06	1.6E-06	1.3E-06	1.0E-09
A	PROTECTED ARE	ESE	3.40	5471.	1.5E-06	1.5E-06	1.2E-06	9.6E-10
A	PROTECTED ARE	ESE	3.50	5632.	1.5E-06	1.4E-06	1.1E-06	9.0E-10
A	PROTECTED ARE	ESE	3.60	5792.	1.4E-06	1.4E-06	1.1E-06	8.4E-10
A	PROTECTED ARE	SE	15.00	24135.	2.4E-07	2.1E-07	1.5E-07	6.0E-11
A	LPZ (4828)	SE	4.80	7723.	1.1E-06	1.1E-06	8.3E-07	4.9E-10
A	LPZ (4828)	ESE	4.20	6758.	1.1E-06	1.0E-06	8.1E-07	6.0E-10
A	LPZ (4828)	ENE	4.10	6597.	6.9E-07	6.5E-07	5.2E-07	3.7E-10
A	LPZ (4828)	NNE	4.30	6918.	7.6E-07	7.3E-07	5.7E-07	5.1E-10
A	LPZ (4828)	ESE	0.10	160.	4.1E-04	4.1E-04	4.0E-04	8.4E-07
A	LPZ (4828)	SE	9.59	15437.	4.2E-07	3.9E-07	2.8E-07	1.3E-10
A	LPZ (4828)	SE	8.29	13346.	5.1E-07	4.7E-07	3.5E-07	1.7E-10
A	LPZ (4828)	NE	4.30	6919.	6.7E-07	6.3E-07	5.0E-07	3.7E-10
A	EAB (1950 M)	S	1.21	1950.	1.1E-05	1.1E-05	9.4E-06	7.9E-09
A	EAB (1950 M)	SSW	1.21	1950.	8.4E-06	8.3E-06	7.2E-06	5.5E-09
A	EAB (1950 M)	SW	1.21	1950.	4.8E-06	4.7E-06	4.1E-06	3.5E-09
A	EAB (1950 M)	WSW	1.21	1950.	2.6E-06	2.5E-06	2.2E-06	1.4E-09
A	EAB (1950 M)	W	1.21	1950.	1.6E-06	1.5E-06	1.3E-06	1.3E-09
A	EAB (1950 M)	WNW	1.21	1950.	3.0E-06	2.9E-06	2.6E-06	2.5E-09
A	EAB (1950 M)	NW	1.21	1950.	5.4E-06	5.3E-06	4.6E-06	5.2E-09
A	EAB (1950 M)	NNW	1.21	1950.	9.9E-06	9.8E-06	8.5E-06	1.1E-08
A	EAB (1950 M)	N	1.21	1950.	1.0E-05	1.0E-05	8.8E-06	1.3E-08
A	EAB (1950 M)	NNE	1.21	1950.	7.9E-06	7.8E-06	6.8E-06	1.0E-08
A	EAB (1950 M)	NE	1.21	1950.	6.9E-06	6.8E-06	5.9E-06	7.3E-09
A	EAB (1950 M)	ENE	1.21	1950.	6.6E-06	6.5E-06	5.6E-06	6.7E-09
A	EAB (1950 M)	E	1.21	1950.	7.0E-06	6.9E-06	6.0E-06	7.0E-09
A	EAB (1950 M)	ESE	1.21	1950.	1.1E-05	1.1E-05	9.3E-06	1.1E-08
A	EAB (1950 M)	SE	1.21	1950.	1.4E-05	1.3E-05	1.2E-05	1.2E-08
A	EAB (1950 M)	SSE	1.21	1950.	1.4E-05	1.4E-05	1.2E-05	1.1E-08

Table 2.3-38d

CGS Calculation, Terrain Features, Desert Sigmas

CGS REACTOR BLDG
NO DECAY, UNDEPLETED
CORRECTED USING STANDARD OPEN TERRAIN FACTORS

ANNUAL AVERAGE CHI/Q (SEC/METER CUBED)					DISTANCE IN MILES FROM THE SITE						
SECTOR	0.250	0.500	0.750	1.000	1.500	2.000	2.500	3.000	3.500	4.000	4.500
S	3.983E-07	5.147E-07	4.459E-07	2.855E-07	1.417E-07	8.546E-08	6.007E-08	4.723E-08	3.955E-08	3.450E-08	3.085E-08
SSW	3.015E-07	3.460E-07	2.917E-07	1.836E-07	8.972E-08	5.399E-08	3.809E-08	3.012E-08	2.537E-08	2.223E-08	1.996E-08
SW	2.241E-07	2.226E-07	1.853E-07	1.175E-07	5.986E-08	3.986E-08	3.227E-08	2.901E-08	2.518E-08	2.229E-08	2.000E-08
WSW	9.654E-08	7.983E-08	7.694E-08	5.258E-08	2.801E-08	1.857E-08	1.473E-08	1.300E-08	1.120E-08	9.892E-09	8.868E-09
W	3.448E-08	7.360E-08	7.682E-08	5.380E-08	2.883E-08	1.888E-08	1.476E-08	1.283E-08	1.088E-08	9.460E-09	8.362E-09
WNW	7.411E-08	1.508E-07	1.476E-07	1.017E-07	5.532E-08	3.697E-08	2.952E-08	2.619E-08	2.256E-08	1.990E-08	1.781E-08
NW	2.513E-07	3.020E-07	2.641E-07	1.670E-07	8.155E-08	4.940E-08	3.530E-08	2.826E-08	2.409E-08	2.133E-08	1.931E-08
NNW	7.930E-07	7.233E-07	5.856E-07	3.550E-07	1.649E-07	9.701E-08	6.783E-08	5.335E-08	4.477E-08	3.913E-08	4.183E-08
N	1.124E-06	8.905E-07	6.762E-07	4.031E-07	1.877E-07	1.113E-07	7.839E-08	6.206E-08	5.232E-08	4.585E-08	4.113E-08
NNE	1.049E-06	7.337E-07	5.603E-07	3.353E-07	1.577E-07	9.422E-08	6.677E-08	5.308E-08	4.498E-08	3.965E-08	4.297E-08
NE	6.008E-07	4.702E-07	3.787E-07	2.340E-07	1.123E-07	6.758E-08	4.829E-08	3.883E-08	4.067E-08	4.490E-08	8.482E-08
ENE	4.892E-07	5.305E-07	4.710E-07	3.229E-07	2.809E-07	3.180E-07	3.667E-07	5.692E-07	1.128E-06	1.019E-06	8.387E-07
E	5.015E-07	5.031E-07	4.747E-07	3.390E-07	3.184E-07	3.702E-07	4.232E-07	6.426E-07	1.325E-06	1.054E-06	8.662E-07
ESE	9.120E-07	7.571E-07	6.975E-07	4.987E-07	4.778E-07	5.635E-07	6.623E-07	1.026E-06	1.950E-06	1.650E-06	1.356E-06
SE	6.666E-07	6.348E-07	5.775E-07	3.846E-07	2.045E-07	1.394E-07	1.150E-07	1.046E-07	2.207E-07	7.638E-07	6.314E-07
SSE	4.473E-07	5.728E-07	5.291E-07	3.498E-07	1.780E-07	1.089E-07	7.782E-08	6.216E-08	5.287E-08	4.674E-08	4.227E-08

ANNUAL AVERAGE CHI/Q (SEC/METER CUBED)					DISTANCE IN MILES FROM THE SITE						
SECTOR	5.000	7.500	10.000	15.000	20.000	25.000	30.000	35.000	40.000	45.000	50.000
S	2.814E-08	2.023E-08	1.577E-08	3.200E-07	2.287E-07	1.764E-07	1.428E-07	1.195E-07	1.024E-07	8.938E-08	7.915E-08
SSW	1.825E-08	1.646E-08	1.027E-08	2.576E-07	1.846E-07	1.427E-07	1.156E-07	9.686E-08	8.309E-08	7.259E-08	6.433E-08
SW	1.814E-08	1.472E-08	6.195E-08	1.393E-07	9.960E-08	7.682E-08	6.218E-08	5.202E-08	4.458E-08	3.891E-08	3.446E-08
WSW	8.058E-09	6.624E-09	2.853E-08	7.526E-08	5.376E-08	4.145E-08	3.353E-08	2.804E-08	2.402E-08	2.096E-08	1.856E-08
W	7.499E-09	4.948E-09	3.627E-09	4.242E-08	3.020E-08	2.323E-08	1.876E-08	1.567E-08	1.341E-08	1.169E-08	1.034E-08
WNW	1.613E-08	1.203E-08	1.269E-08	7.524E-08	5.333E-08	4.089E-08	3.294E-08	2.746E-08	2.346E-08	2.042E-08	1.805E-08
NW	1.778E-08	1.734E-08	1.283E-08	1.423E-07	1.011E-07	7.760E-08	6.258E-08	5.221E-08	4.463E-08	3.888E-08	3.437E-08
NNW	4.509E-08	2.990E-08	2.199E-08	2.697E-07	1.919E-07	1.474E-07	1.190E-07	9.930E-08	8.493E-08	7.401E-08	6.544E-08
N	3.754E-08	4.858E-08	4.276E-07	2.625E-07	1.860E-07	1.425E-07	1.148E-07	9.564E-08	8.168E-08	7.108E-08	6.278E-08
NNE	4.676E-08	4.163E-07	3.178E-07	1.945E-07	1.376E-07	1.053E-07	8.473E-08	7.055E-08	6.022E-08	5.238E-08	4.625E-08
NE	2.656E-07	4.104E-07	2.789E-07	1.705E-07	1.205E-07	9.214E-08	7.408E-08	6.164E-08	5.259E-08	4.572E-08	4.035E-08
ENE	7.075E-07	3.901E-07	2.653E-07	1.623E-07	1.148E-07	8.786E-08	7.067E-08	5.884E-08	5.021E-08	4.367E-08	3.855E-08
E	7.296E-07	4.000E-07	2.710E-07	1.650E-07	1.163E-07	8.872E-08	7.121E-08	5.918E-08	5.043E-08	4.380E-08	3.862E-08
ESE	1.143E-06	6.275E-07	1.652E-07	2.594E-07	1.830E-07	1.398E-07	1.123E-07	9.334E-08	7.958E-08	6.915E-08	6.099E-08
SE	5.345E-07	2.974E-07	2.034E-07	3.525E-07	2.499E-07	1.916E-07	1.544E-07	1.287E-07	1.099E-07	9.568E-08	8.452E-08
SSE	3.896E-08	3.642E-08	2.261E-08	3.975E-07	2.834E-07	2.181E-07	1.762E-07	1.473E-07	1.261E-07	1.099E-07	9.728E-08

Table 2.3-38e

CGS Calculation, Terrain Features, Desert Sigmas

CGS REACTOR BLDG
NO DECAY, UNDEPLETED
CHI/Q (SEC/METER CUBED) FOR EACH SEGMENT

	SEGMENT BOUNDARIES IN MILES FROM THE SITE									
DIRECTION FROM SITE	.5-1	1-2	2-3	3-4	4-5	5-10	10-20	20-30	30-40	40-50
S	3.899E-07	1.486E-07	6.171E-08	3.982E-08	3.093E-08	2.000E-08	2.118E-07	1.769E-07	1.196E-07	8.944E-08
SSW	2.557E-07	9.471E-08	3.914E-08	2.553E-08	2.000E-08	1.411E-08	1.702E-07	1.431E-07	9.698E-08	7.264E-08
SW	1.635E-07	6.378E-08	3.299E-08	2.517E-08	1.999E-08	3.647E-08	1.045E-07	7.704E-08	5.209E-08	3.894E-08
WSW	6.676E-08	2.927E-08	1.506E-08	1.122E-08	8.872E-09	1.668E-08	5.532E-08	4.156E-08	2.808E-08	2.098E-08
W	6.588E-08	2.996E-08	1.509E-08	1.090E-08	8.368E-09	4.928E-09	2.837E-08	2.330E-08	1.569E-08	1.170E-08
WNW	1.279E-07	5.746E-08	3.018E-08	2.258E-08	1.781E-08	1.324E-08	5.160E-08	4.103E-08	2.750E-08	2.044E-08
NW	2.294E-07	8.625E-08	3.624E-08	2.423E-08	1.934E-08	1.543E-08	9.519E-08	7.785E-08	5.228E-08	3.891E-08
NNW	5.137E-07	1.770E-07	6.982E-08	4.507E-08	4.224E-08	2.976E-08	1.801E-07	1.479E-07	9.945E-08	7.407E-08
N	6.024E-07	2.016E-07	8.063E-08	5.264E-08	4.120E-08	2.146E-07	2.652E-07	1.430E-07	9.579E-08	7.115E-08
NNE	4.988E-07	1.690E-07	6.861E-08	4.526E-08	4.339E-08	2.904E-07	1.966E-07	1.057E-07	7.066E-08	5.243E-08
NE	3.347E-07	1.195E-07	4.965E-08	4.175E-08	1.400E-07	3.198E-07	1.723E-07	9.247E-08	6.174E-08	4.576E-08
ENE	4.184E-07	3.067E-07	4.347E-07	9.267E-07	8.436E-07	4.052E-07	1.641E-07	8.817E-08	5.893E-08	4.371E-08
E	4.207E-07	3.460E-07	4.968E-07	1.027E-06	8.714E-07	4.159E-07	1.669E-07	8.906E-08	5.928E-08	4.385E-08
ESE	6.224E-07	5.205E-07	7.813E-07	1.572E-06	1.364E-06	5.365E-07	2.045E-07	1.403E-07	9.350E-08	6.922E-08
SE	5.045E-07	2.156E-07	1.174E-07	3.944E-07	6.347E-07	3.083E-07	2.738E-07	1.923E-07	1.289E-07	9.576E-08
SSE	4.591E-07	1.855E-07	7.985E-08	5.319E-08	4.237E-08	3.085E-08	2.635E-07	2.188E-07	1.475E-07	1.100E-07

Table 2.3-38f

CGS Calculation, Terrain Features, Desert Sigmas

CGS REACTOR BLDG, SPECIFIC POINTS OF INTEREST

RELEASE ID	TYPE OF LOCATION	DIRECTION FROM SITE	DISTANCE (MILES)	DISTANCE (METERS)	X/Q (SEC/CUB.METER) NO DECAY UNDEPLETED	X/Q (SEC/CUB.METER) 2.260 DAY DECAY UNDEPLETED	X/Q (SEC/CUB.METER) 8.000 DAY DECAY DEPLETED	D/Q (PER SQ.METER)
B	PROTECTED ARE	SE	6.40	10298.	3.7E-07	3.5E-07	3.4E-07	3.2E-10
B	PROTECTED ARE	ESE	3.90	6275.	1.7E-06	1.6E-06	1.3E-06	7.0E-10
B	PROTECTED ARE	ESE	4.00	6436.	1.7E-06	1.6E-06	1.3E-06	6.6E-10
B	PROTECTED ARE	ESE	4.10	6597.	1.6E-06	1.5E-06	1.2E-06	6.4E-10
B	PROTECTED ARE	ESE	4.20	6758.	1.5E-06	1.5E-06	1.2E-06	6.0E-10
B	PROTECTED ARE	ESE	4.30	6919.	1.5E-06	1.4E-06	1.1E-06	5.7E-10
B	PROTECTED ARE	ESE	4.40	7080.	1.4E-06	1.3E-06	1.1E-06	5.5E-10
B	PROTECTED ARE	ESE	4.50	7241.	1.4E-06	1.3E-06	1.0E-06	5.2E-10
B	PROTECTED ARE	ESE	3.00	4827.	1.0E-06	9.9E-07	8.1E-07	1.2E-09
B	PROTECTED ARE	ESE	3.10	4988.	1.2E-06	1.2E-06	9.6E-07	1.2E-09
B	PROTECTED ARE	ESE	3.21	5159.	1.5E-06	1.5E-06	1.2E-06	1.1E-09
B	PROTECTED ARE	ESE	3.30	5310.	1.8E-06	1.8E-06	1.5E-06	1.0E-09
B	PROTECTED ARE	ESE	3.40	5471.	1.9E-06	1.8E-06	1.5E-06	9.4E-10
B	PROTECTED ARE	ESE	3.50	5632.	1.8E-06	1.8E-06	1.4E-06	8.9E-10
B	PROTECTED ARE	ESE	3.60	5792.	1.8E-06	1.7E-06	1.4E-06	8.3E-10
B	PROTECTED ARE	SE	15.00	24135.	3.5E-07	3.1E-07	2.9E-07	7.6E-11
B	LPZ (4828)	SE	4.80	7723.	5.7E-07	5.5E-07	5.5E-07	5.9E-10
B	LPZ (4828)	ESE	4.20	6758.	1.5E-06	1.5E-06	1.2E-06	6.0E-10
B	LPZ (4828)	ENE	4.10	6597.	9.8E-07	9.3E-07	7.7E-07	3.8E-10
B	LPZ (4828)	NNE	4.30	6918.	4.1E-08	4.1E-08	3.9E-08	1.8E-10
B	LPZ (4828)	ESE	0.10	160.	3.1E-06	3.1E-06	3.1E-06	4.0E-08
B	LPZ (4828)	SE	9.59	15437.	2.1E-07	2.0E-07	1.9E-07	1.6E-10
B	LPZ (4828)	SE	8.29	13346.	2.6E-07	2.5E-07	2.4E-07	2.0E-10
B	LPZ (4828)	NE	4.30	6919.	6.8E-08	6.6E-08	6.6E-08	1.3E-10
B	EAB (1950 M)	S	1.21	1950.	1.9E-07	1.9E-07	1.8E-07	1.6E-09
B	EAB (1950 M)	SSW	1.21	1950.	1.2E-07	1.2E-07	1.2E-07	1.0E-09
B	EAB (1950 M)	SW	1.21	1950.	7.9E-08	7.9E-08	7.6E-08	5.7E-10
B	EAB (1950 M)	WSW	1.21	1950.	3.8E-08	3.8E-08	3.6E-08	1.9E-10
B	EAB (1950 M)	W	1.21	1950.	3.8E-08	3.7E-08	3.7E-08	2.4E-10
B	EAB (1950 M)	WNW	1.21	1950.	7.2E-08	7.1E-08	7.0E-08	4.8E.10
B	EAB (1950 M)	NW	1.21	1950.	1.1E-07	1.1E-07	1.1E-07	9.0E-10
B	EAB (1950 M)	NNW	1.21	1950.	2.3E-07	2.3E-07	2.2E-07	2.0E-09
B	EAB (1950 M)	N	1.21	1950.	2.6E-07	2.6E-07	2.5E-07	2.8E-09
B	EAB (1950 M)	NNE	1.21	1950.	2.2E-07	2.2E-07	2.1E-07	2.5E-09
B	EAB (1950 M)	NE	1.21	1950.	1.6E-07	1.6E-07	1.5E-07	1.8E-09
B	EAB (1950 M)	ENE	1.21	1950.	2.7E-07	2.7E-07	2.6E-07	1.8E-09
B	EAB (1950 M)	E	1.21	1950.	2.9E-07	2.9E-07	2.9E-07	1.5E-09
B	EAB (1950 M)	ESE	1.21	1950.	4.4E-07	4.4E-07	4.3E-07	2.4E-09
B	EAB (1950 M)	SE	1.21	1950.	2.7E-07	2.7E-07	2.6E-07	2.0E-09
B	EAB (1950 M)	SSE	1.21	1950.	2.4E-07	2.4E-07	2.3E-07	1.9E-09

TABLE 39 (a through f)

DELETED

Table 2.3-40

Frequency of Wind Resuspension
Periods at Hanford (1953-1970)

Total Dust Hours	476
Total Dust Days	142
Number of Dust Storms	150
Average Dust Hr/Yr.	26.4
Average Dust Days/Yr.	7.9
Average Dust Storms Per Year	8.3
Range in Duration of Dust Storms (hr.)	1-16
Average Duration of Dust Storms (hr.)	3.2
Average Dust Storm Concentration (from Table 2) mg/m^3	6.77

Table 2.3-41

Dust Concentration Dependency on Wind Speed and Direction at Hanford 1953-1970 Predicted Concentration From Visibility, mg/m^3

WIND DIRECTION	WIND SPEED CLASS (MPH) 1-3	4-7	8-12	13-18	19-24	25-31	32-38	39-46	47-54	55-63	64-UP	OVERALL AVERAGE
SE	.00	.00	.00	.00	.00	.00	.00	.00	.00	.00	.00	.00
SSE	.00	.00	.00	2.71	1.38	1.25	.00	.00	.00	.00	.00	1.78
S	.00	.00	7.83	1.62	1.38	5.70	15.92	.00	.00	.00	.00	7.17
SSW	.00	.00	.00	2.48	1.62	2.21	3.86	4.13	.00	.00	.00	2.95
SW	.00	.00	2.71	6.34	3.54	2.75	8.83	13.87	.00	988.88*	.00	19.40
WSW	.00	.00	1.74	1.81	4.96	4.13	12.95	48.31	.00	.00	.00	7.67
W	.00	1.74	1.74	1.83	2.89	5.37	2.71	.00	.00	.00	.00	3.54
WNW	.00	.00	3.49	2.64	1.77	1.99	3.29	4.13	.00	.00	.00	2.39
NW	.00	3.29	1.88	2.58	1.50	1.98	2.23	.00	.00	.00	.00	2.08
NNW	.00	2.02	2.60	2.58	4.80	.00	.00	.00	.00	.00	.00	2.77
N	.00	3.29	2.92	3.50	5.06	12.99	.00	.00	.00	.00	.00	3.81
NNE	.00	1.74	3.38	3.41	6.08	7.04	7.83	.00	.00	.00	.00	4.77
NE	.00	4.38	4.60	3.38	4.54	2.81	.00	.00	.00	.00	.00	3.84
ENE	.00	.00	.00	3.05	2.19	.00	.00	.00	.00	.00	.00	2.48
E	.00	.00	3.29	2.44	3.60	2.71	.00	.00	.00	.00	.00	2.78
ESE	.00	2.71	.00	.00	.00	.00	.00	.00	.00	.00	.00	2.71
OVERALL** AVERAGE	.00	2.84	3.00	3.15	4.15	3.71	8.57	22.22	.00	988.88	.00	6.77

.00 NO DATA
*VISIBILITY 0 TO 1/16 MILE DUE TO ONE-HOUR DUSTSTORM
**WEIGHTED AVERAGE BASED ON TABLE 2.3-42

Table 2.3-42

Hours Satisfying Dust Storm Criteria at Hanford (1953-1970)
Hours With (1) Visibility 7 Mile and Dust Reported or (2) Visibility
7 to 14 Miles, Windspeed 5.8 M/Sec: RH 70% Dust Assumed

WIND DIRECTION	WIND SPEED CLASS (MPH)											TOTAL HOURS
	1-3	4-7	8-12	13-18	19-24	25-31	32-38	39-46	47-54	55-63	64-UP	
SE	0	0	0	0	0	0	0	0	0	0	0	0
SSE	0	0	0	1	1	1	0	0	0	0	0	3
S	0	0	1	3	1	3	3	0	0	0	0	11
SSW	0	0	0	4	3	11	13	2	0	0	0	33
SW	0	0	1	3	13	24	26	6	0	1	0	74
WSW	0	0	1	7	17	39	13	4	0	0	0	81
W	0	1	1	3	5	7	1	0	0	0	0	18
WNW	0	0	5	5	11	6	1	1	0	0	0	29
NW	0	1	6	4	3	5	2	0	0	0	0	21
NNW	0	2	8	6	2	2	0	0	0	0	0	18
N	0	1	12	34	10	1	0	0	0	0	0	58
NNE	0	1	3	31	23	7	1	0	0	0	0	66
NE	0	2	3	19	15	5	0	0	0	0	0	44
ENE	0	0	0	3	6	0	0	0	0	0	0	9
E	0	0	1	6	2	1	0	0	0	0	0	10
ESE	0	1	0	0	0	0	0	0	0	0	0	1
TOTAL HOURS	0	9	42	129	112	110	60	13	0	1	0	476

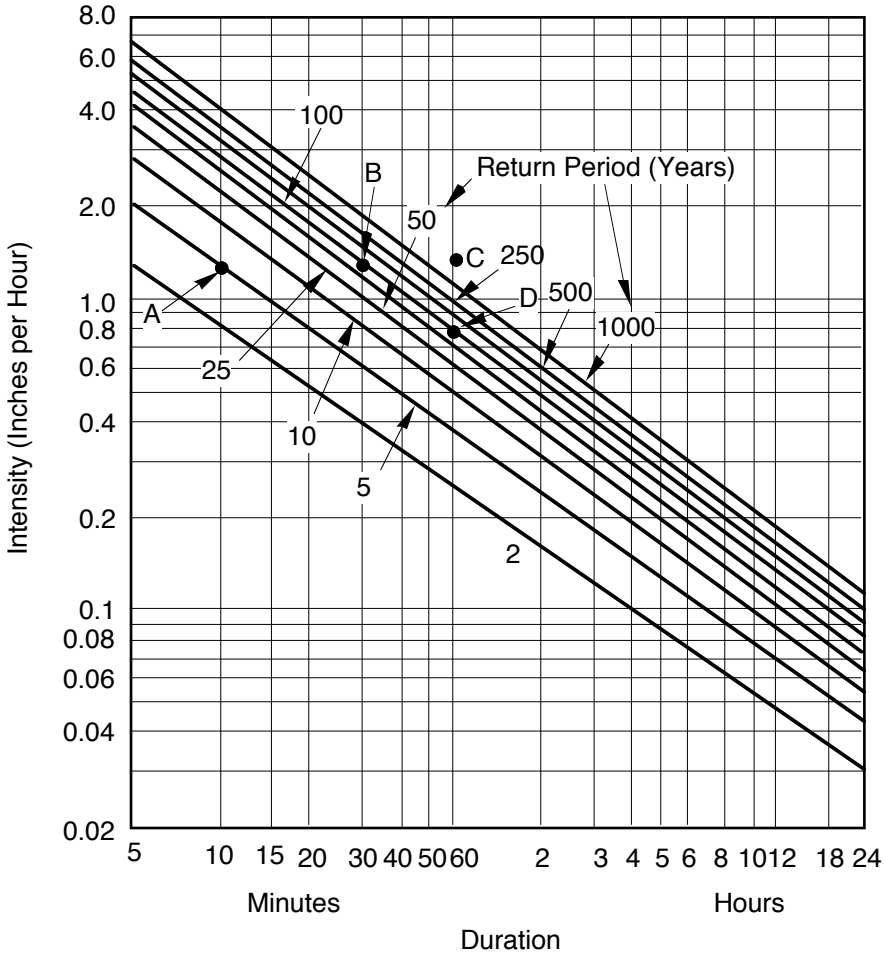

To use this chart, select any desired rainfall intensity and duration and read from the diagonal lines the expected frequency of such intensity and duration. For example, rainfall intensity of 1.3 inches per hour for 10 minutes can be expected to occur, on average, once every five years (point A). However, such intensity can be expected for 30 minutes duration only about once in 100 years (point B). The return period for intensity for 60 minutes duration is greater than 1000 years (point C).

There are, of course, variations in use of the chart. Suppose, for example, it is desired to find the "100-year storm" for 60 minutes. This is 0.8 inch (point D).

Columbia Generating Station Final Safety Analysis Report	**Rainfall Intensity, Duration, and Frequency Based on the Period 1947-69 at Hanford**		
	Draw. No. **010126.01**	Rev.	Figure **2.3-1**

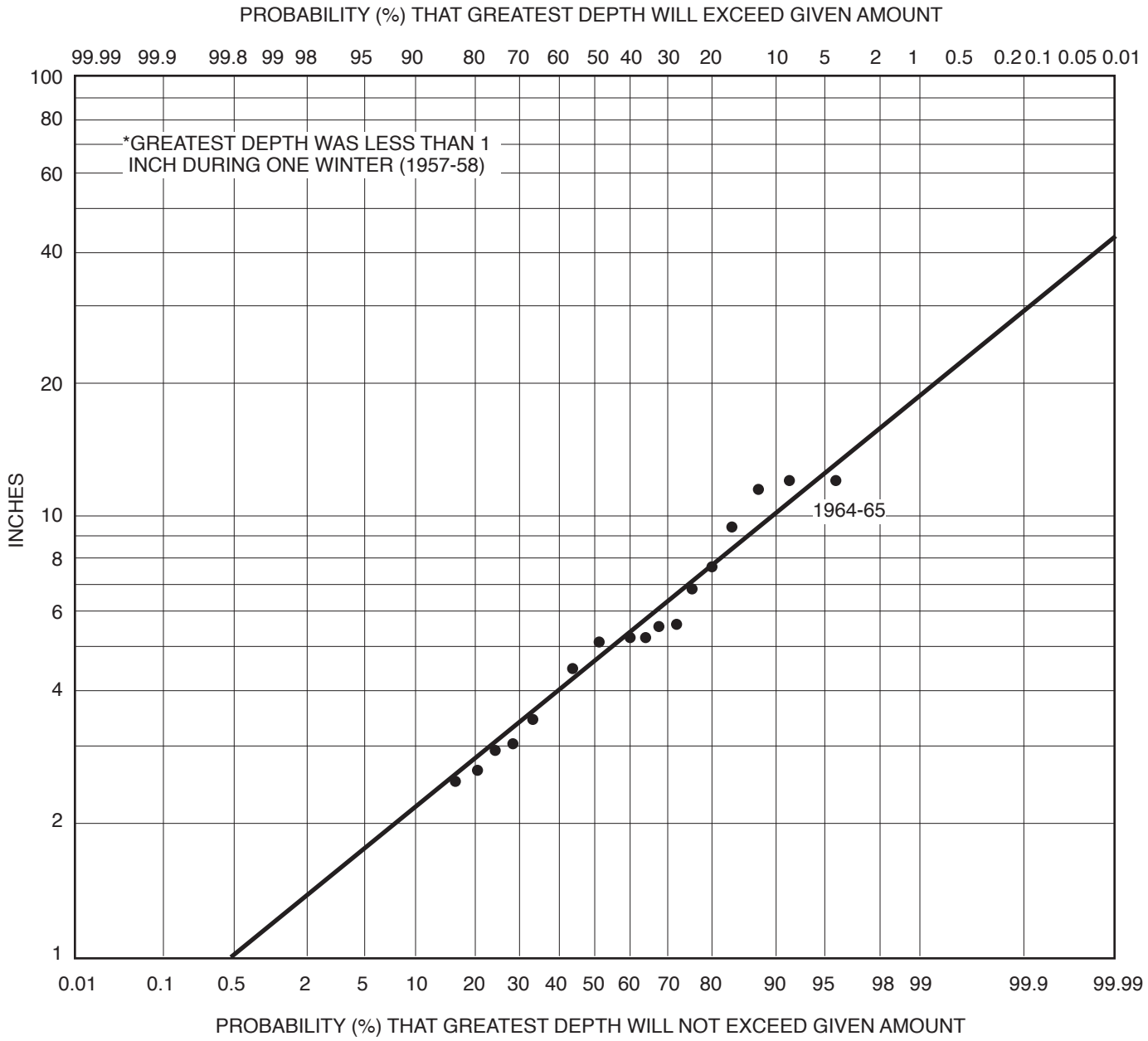

Columbia Generating Station
Final Safety Analysis Report

Greatest Depth of Snow on Ground During 24 of 25 Winters of Record at Hanford (1946-47 through 1969-70)

Draw. No. 990306.14	Rev.	Figure 2.3-2

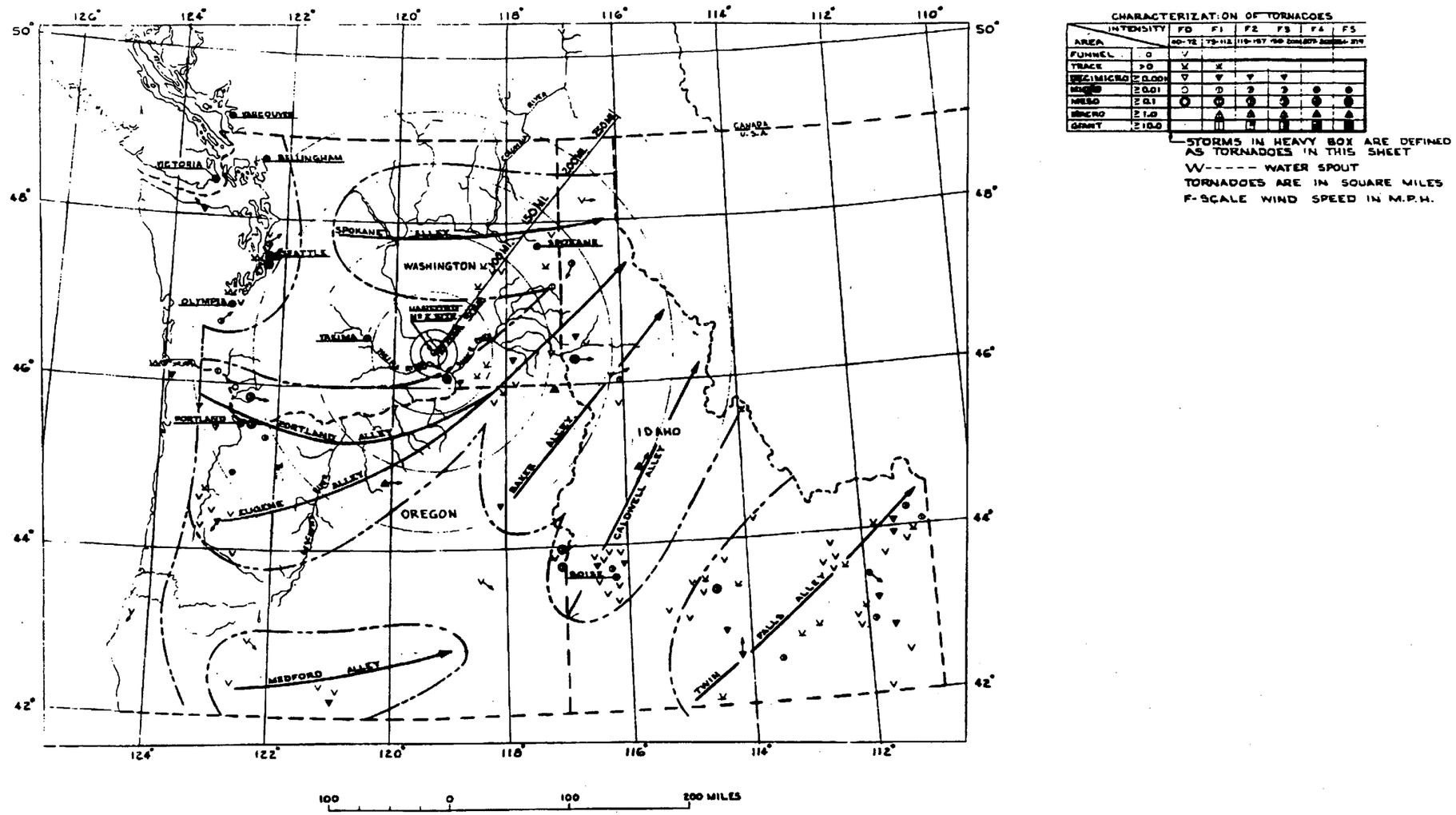

DISTRIBUTION OF TORNADOES IN TRI-STATE AREA

Columbia Generating Station Final Safety Analysis Report	Distribution of Characterized Tornadoes in 20-Year Period (1950-1969)		
	Draw. No. 020552.01	Rev.	Figure 2.3-3

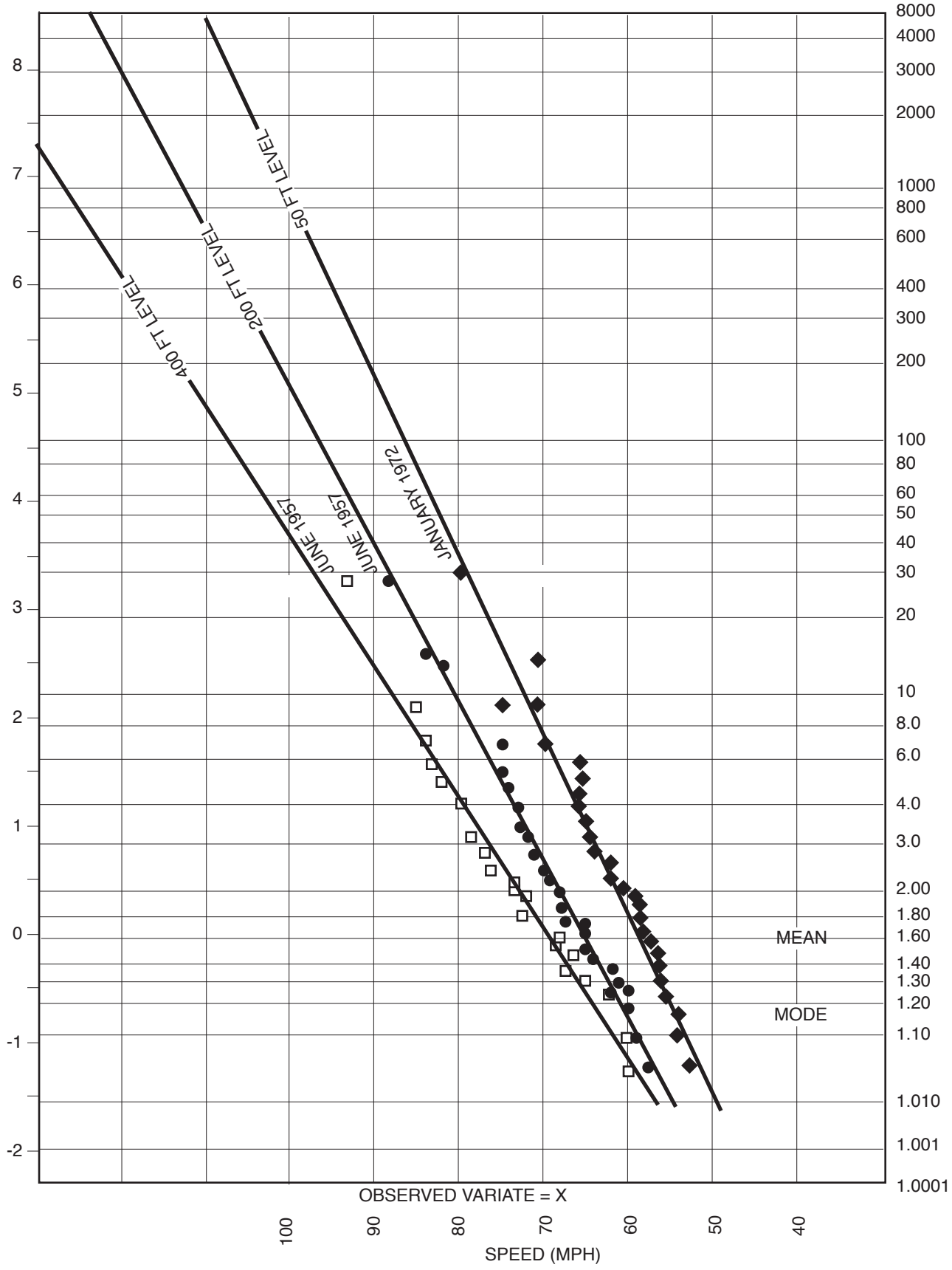

Columbia Generating Station
Final Safety Analysis Report

Peak Wind Gust Return Probability Diagram

Draw. No. 990306.17	Rev.	Figure 2.3-4

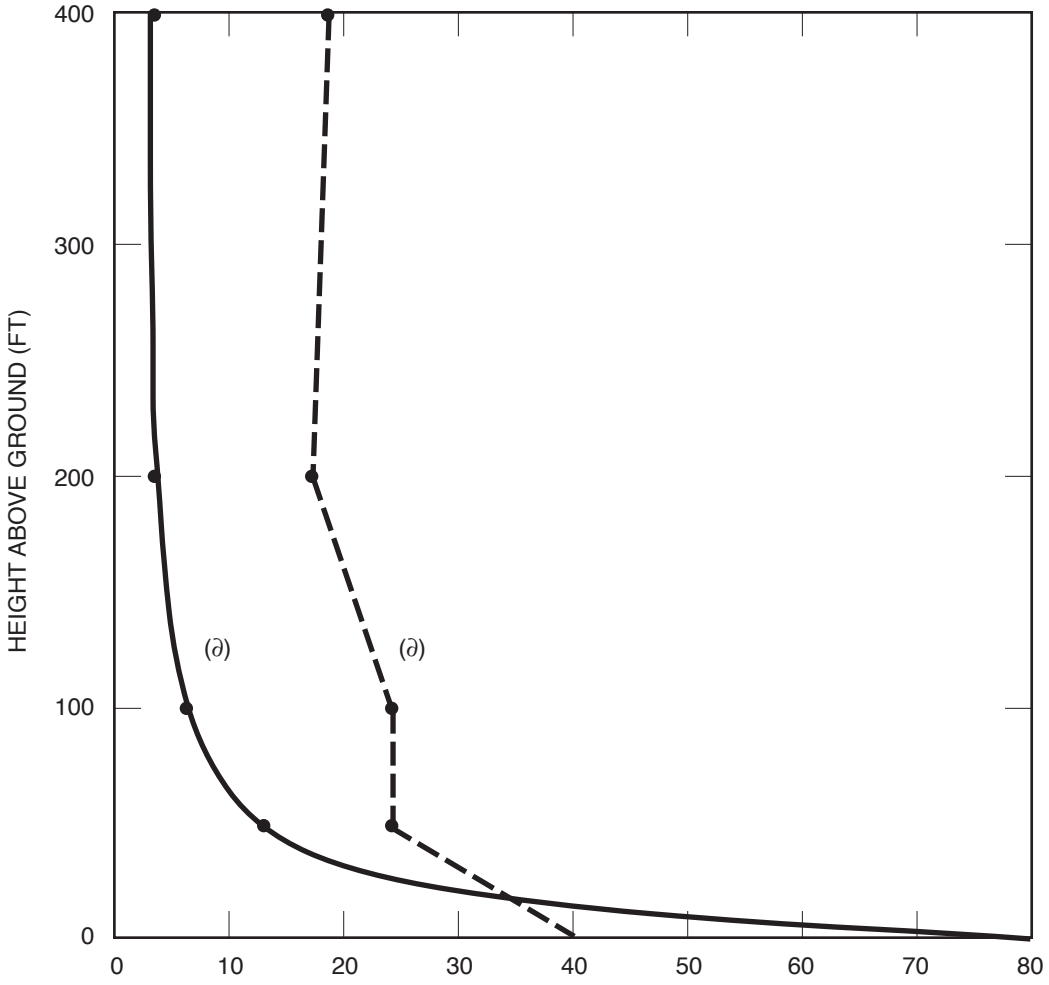

(a) MASS PER CUBIC FOOT (x 10^{-3} GM/ft^3)
(b) MASS MEAN DIAMETER (μ)

(a) AVERAGE MASS OF DUST PER $FOOT^3$, AND
(b) MASS MEAN DIAMETER OF DUST PARTICLES.
METEOROLOGY TOWER, HAPO. AUGUST 11, 1955

Columbia Generating Station Final Safety Analysis Report	**Dust Occurrences Per Wind Speeds to 400 ft Heights**		
	Draw. No. **990306.18**	Rev.	Figure **2.3-5**

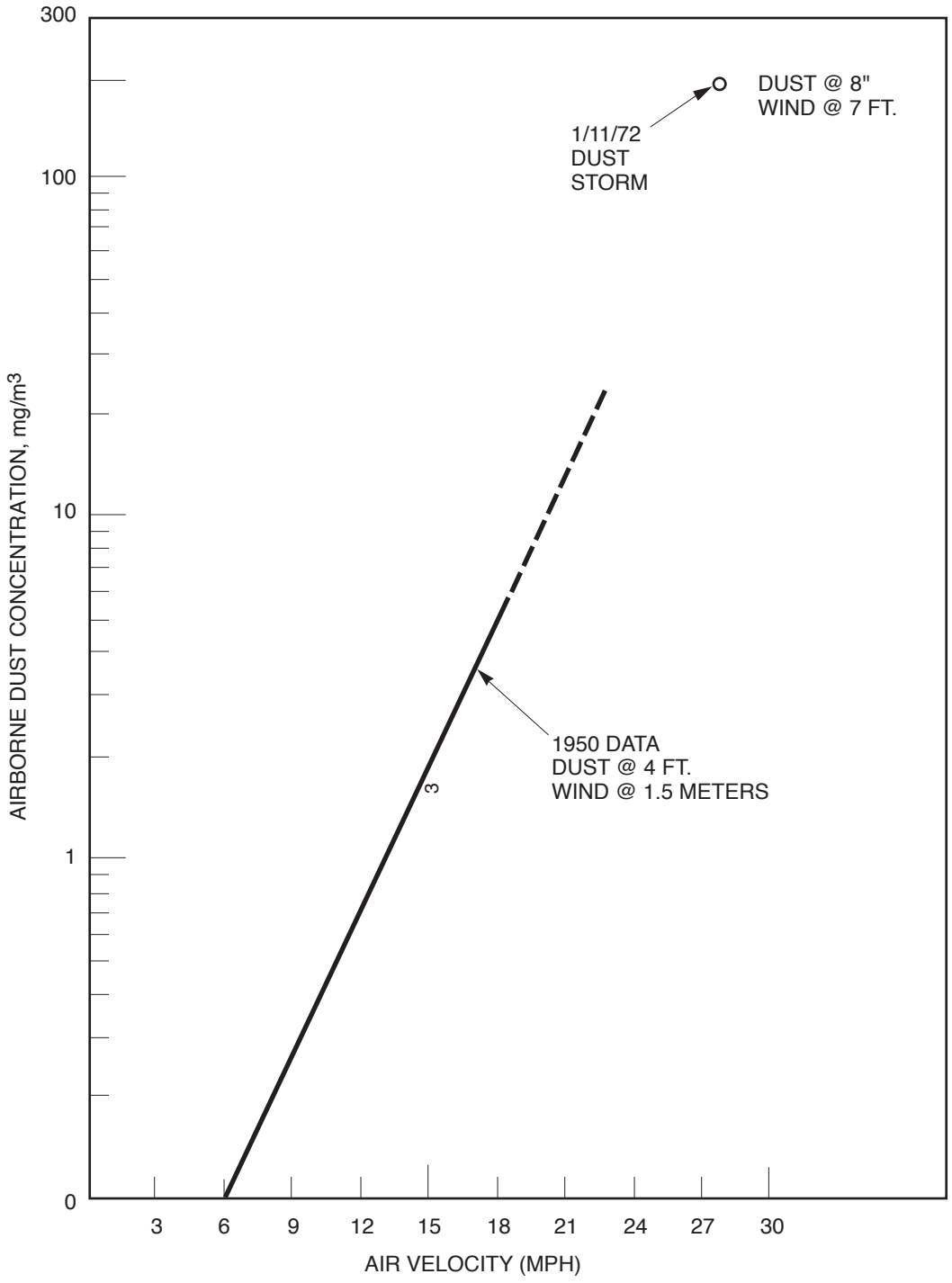

Columbia Generating Station Final Safety Analysis Report	Near-Surface Airborne Dust Concentration as a Function of Average Air Velocity		
	Draw. No. 990306.19	Rev.	Figure 2.3-6

Monthly and annual hourly averages of Dry Bulb (D.B.) and Wet Bulb (W.B.)
Temperature Relative Humidity (R.H.) and temperature of the dew point (D.P.)
(1957 - 1970)

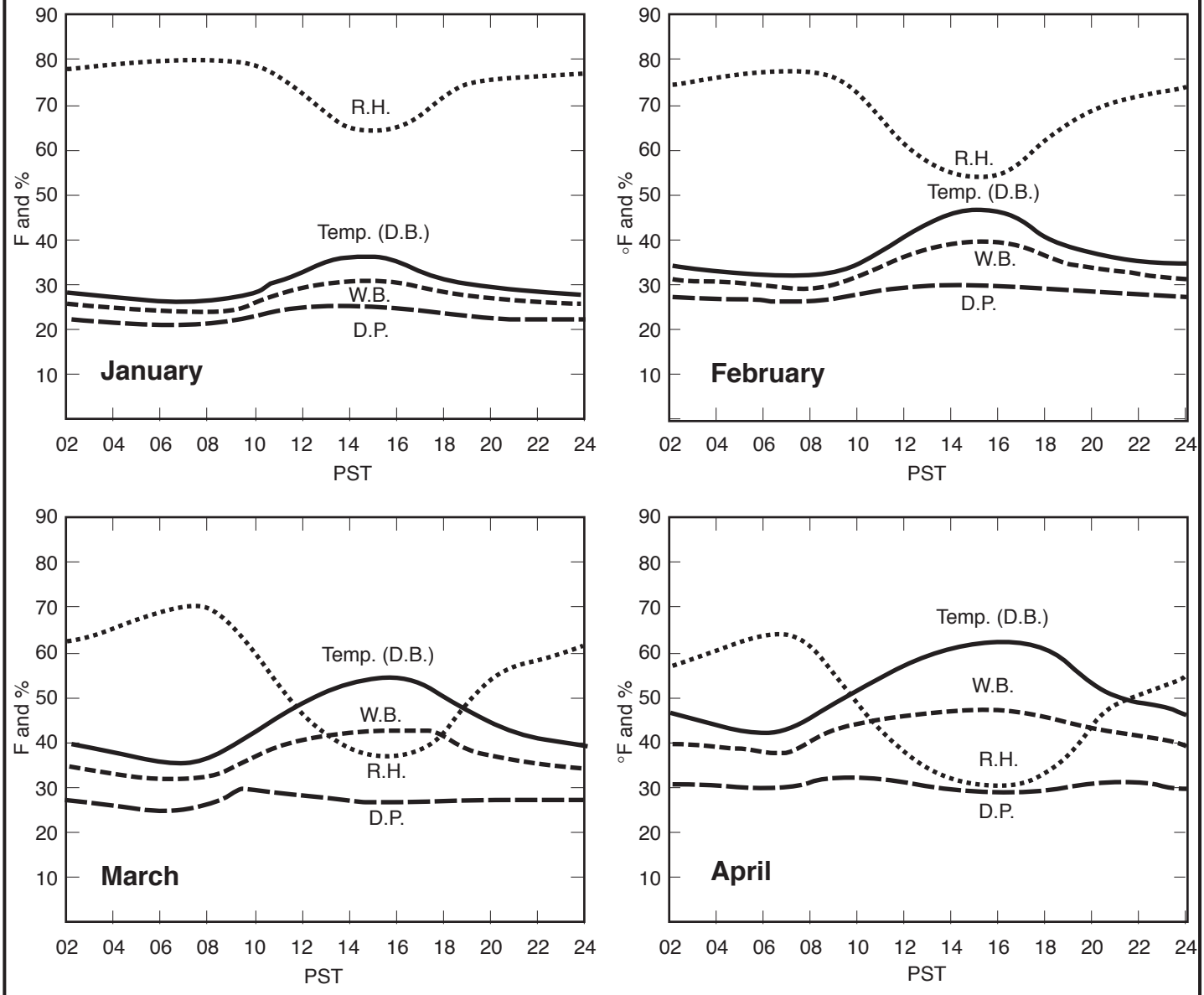

Columbia Generating Station Final Safety Analysis Report	Monthly Hourly Average of Temperature and Relative Humidity - January thru April		
	Draw. No. 990306.21	Rev.	Figure 2.3-7.1

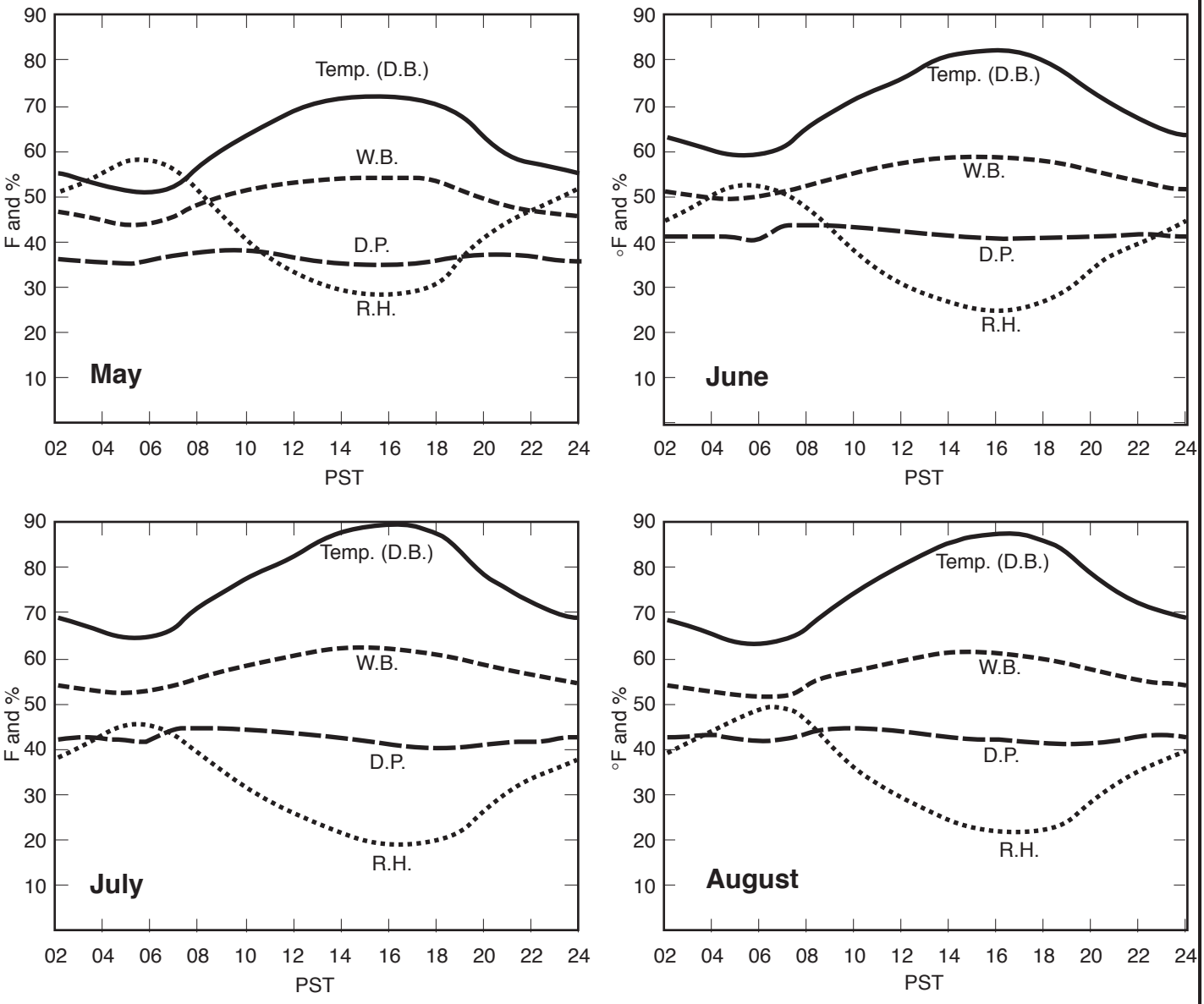

Columbia Generating Station Final Safety Analysis Report	Monthly Hourly Average of Temperature and Relative Humidity - May thru August		
	Draw. No. 990306.40	Rev.	Figure 2.3-7.2

Monthly and annual hourly averages of Dry Bulb (D.B.) and Wet Bulb (W.B.) Temperature
Relative Humidity (R.H.) and temperature of the dew point (D.P.)
(1957-1970)

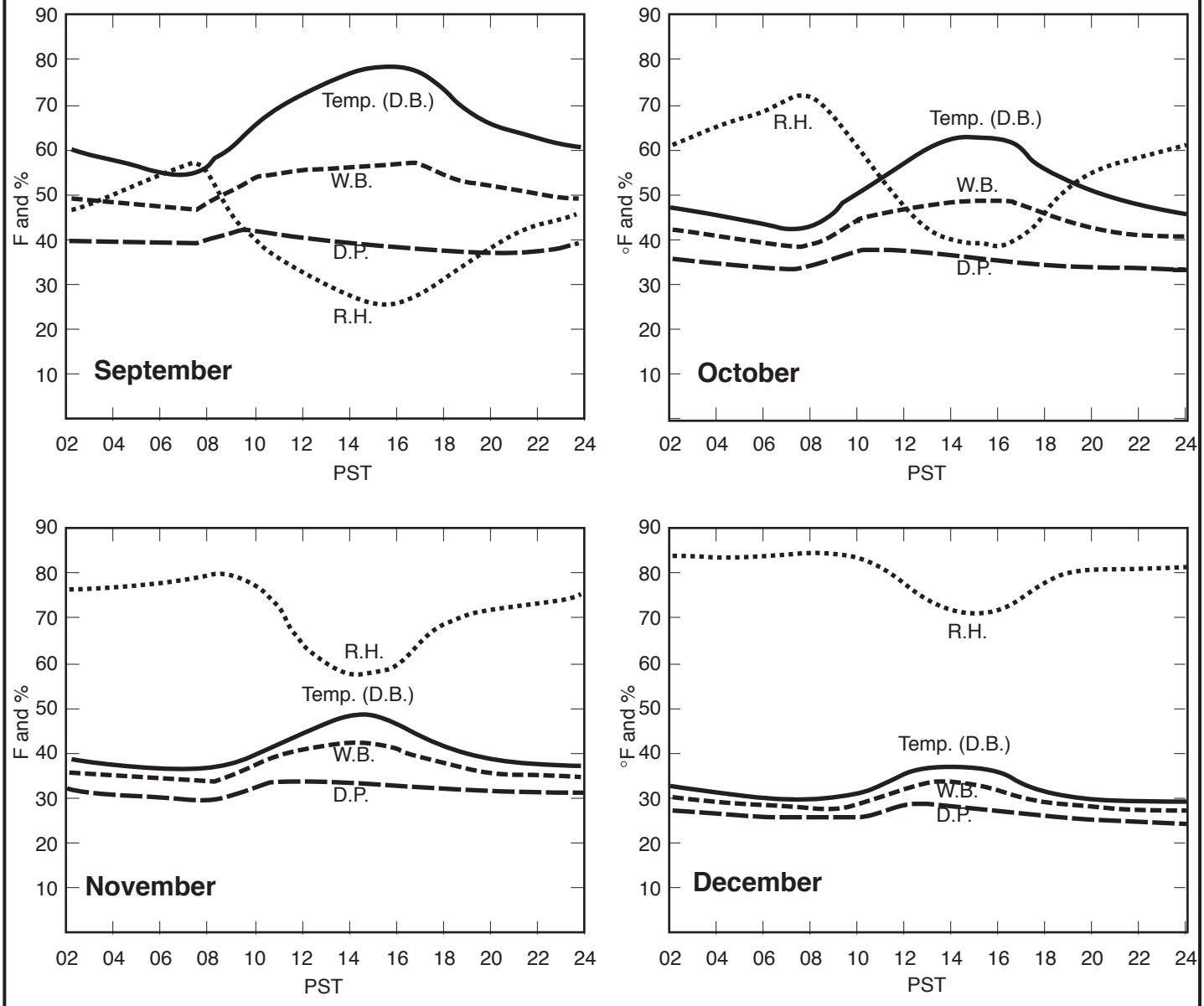

Columbia Generating Station Final Safety Analysis Report	Monthly Hourly Average of Temperature and Relative Humidity - September thru December		
	Draw. No. 990306.22	Rev.	Figure 2.3-7.3

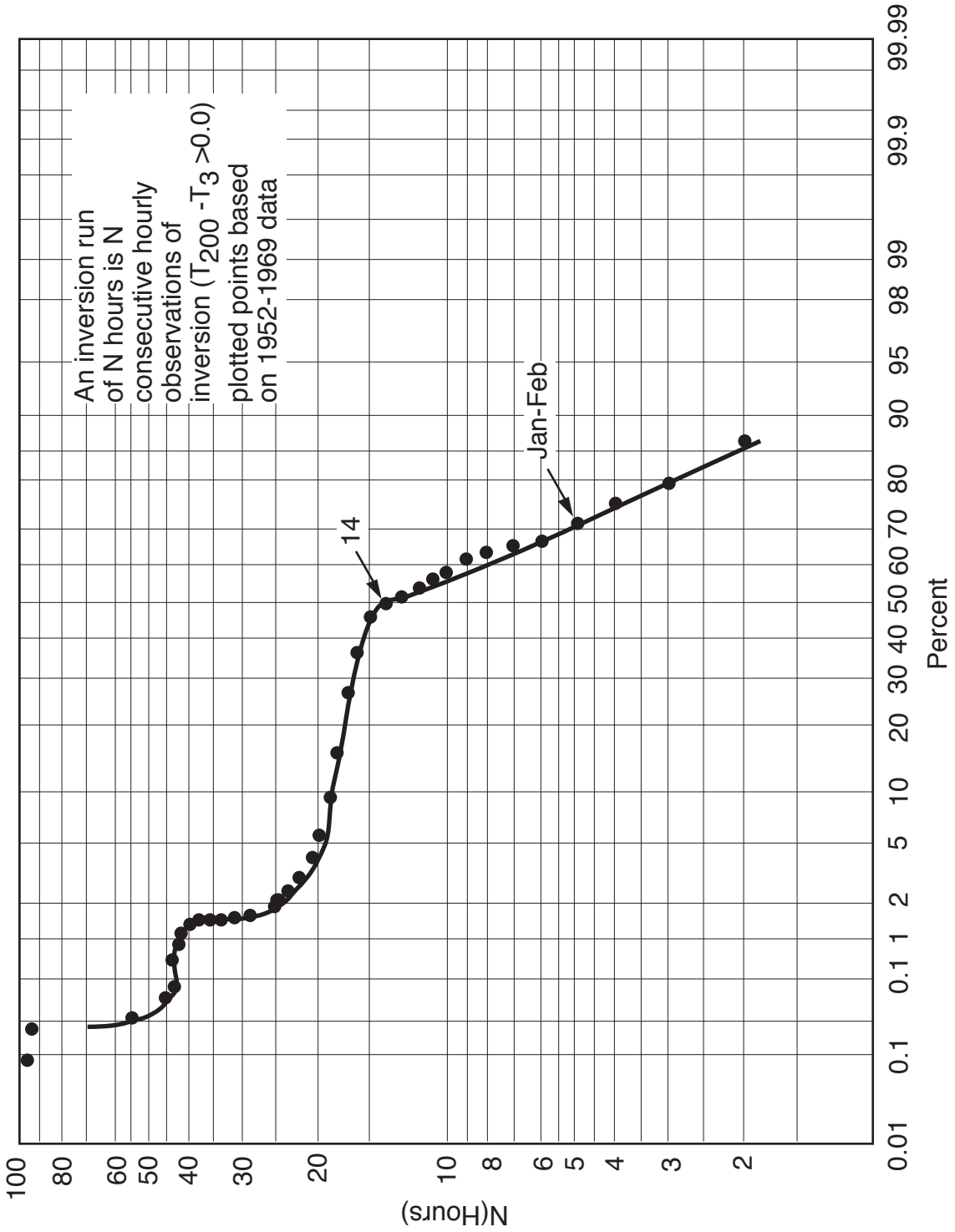

Columbia Generating Station Final Safety Analysis Report	Probability (%) that the First Hourly Observation of an Inversion will Mark the Beginning of an Inversion Run of N Hr		
	Draw. No. 990306.03	Rev.	Figure 2.3-8.1

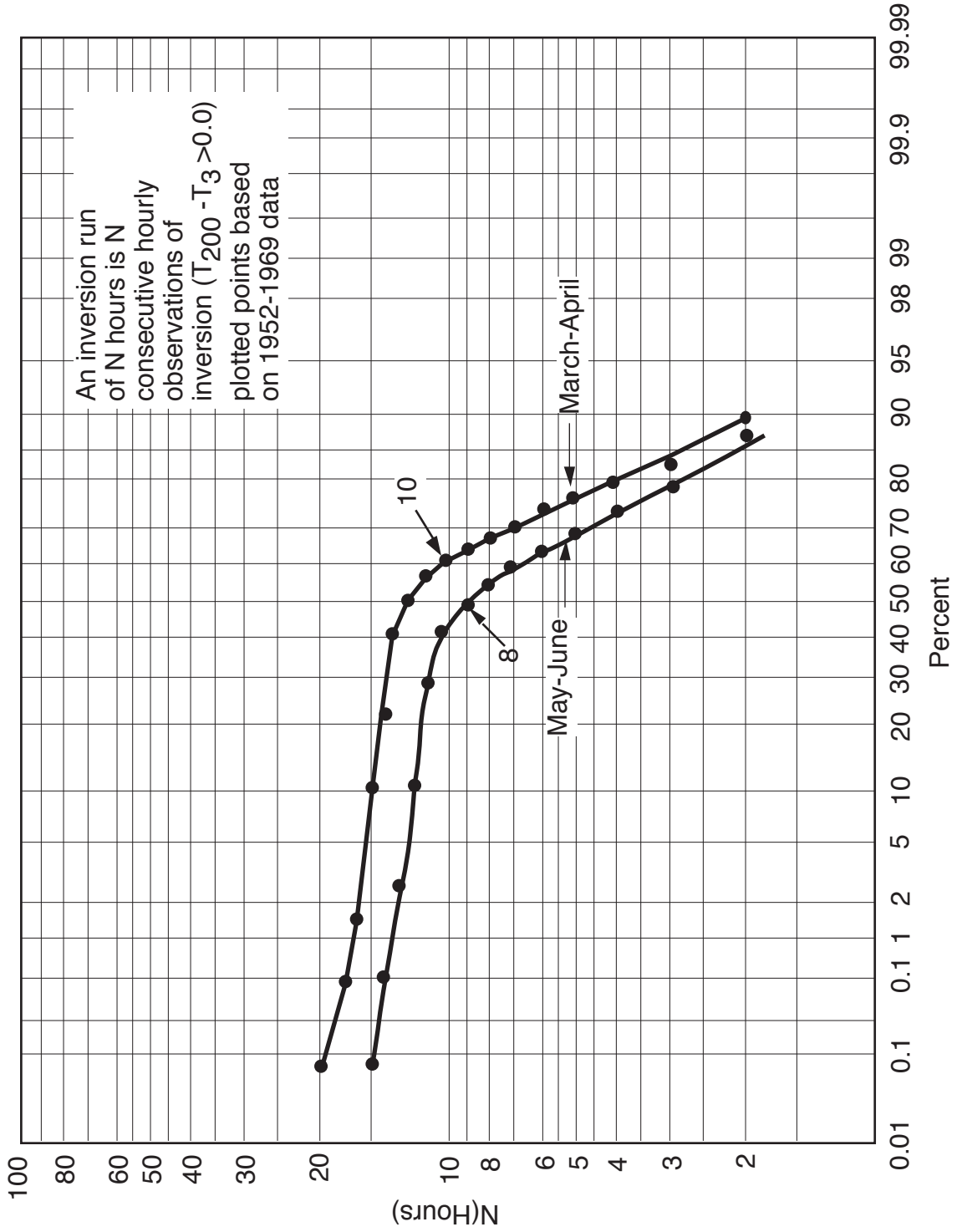

Columbia Generating Station Final Safety Analysis Report	Probability (%) that the First Hourly Observation of an Inversion will Mark the Beginning of an Inversion Run of N Hr		
	Draw. No. 990306.02	Rev.	Figure 2.3-8.2

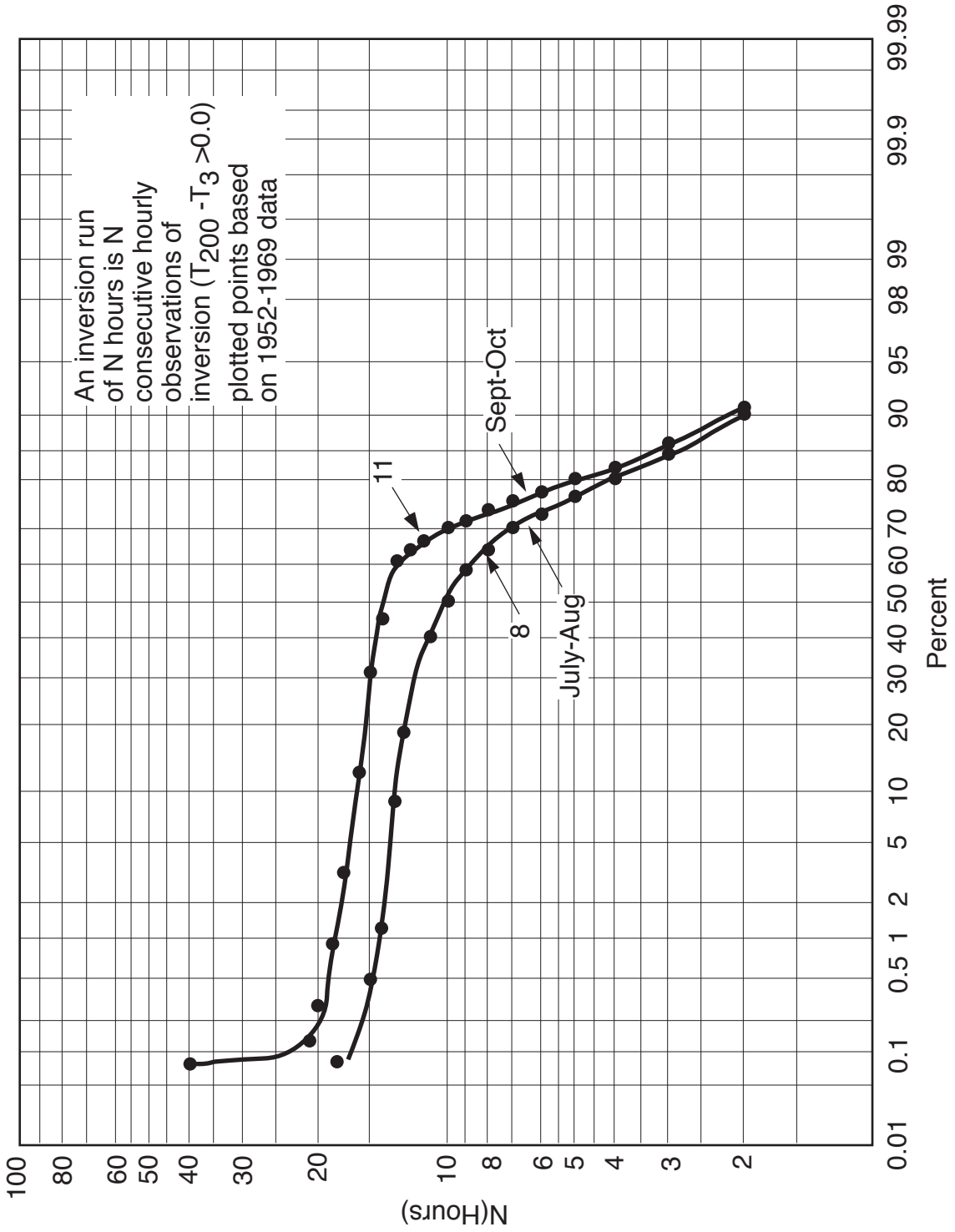

Columbia Generating Station Final Safety Analysis Report	**Probability (%) that the First Hourly Observation of an Inversion will Mark the Beginning of an Inversion Run of N Hr**		
	Draw. No. **990306.04**	Rev.	Figure **2.3-8.3**

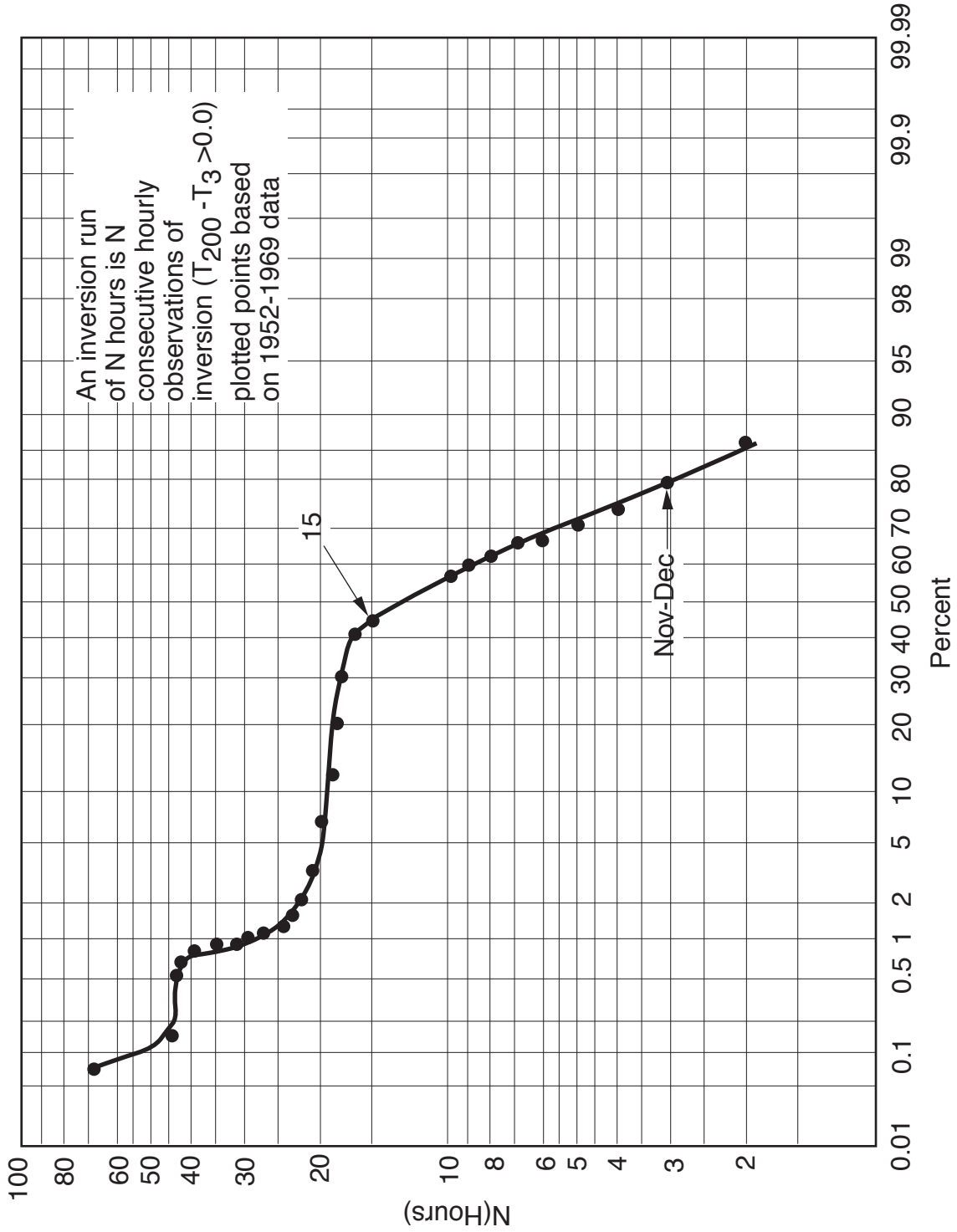

Columbia Generating Station Final Safety Analysis Report	Probability (%) that the First Hourly Observation of an Inversion will Mark the Beginning of an Inversion Run of N Hr		
	Draw. No. 990306.05	Rev.	Figure 2.3-8.4

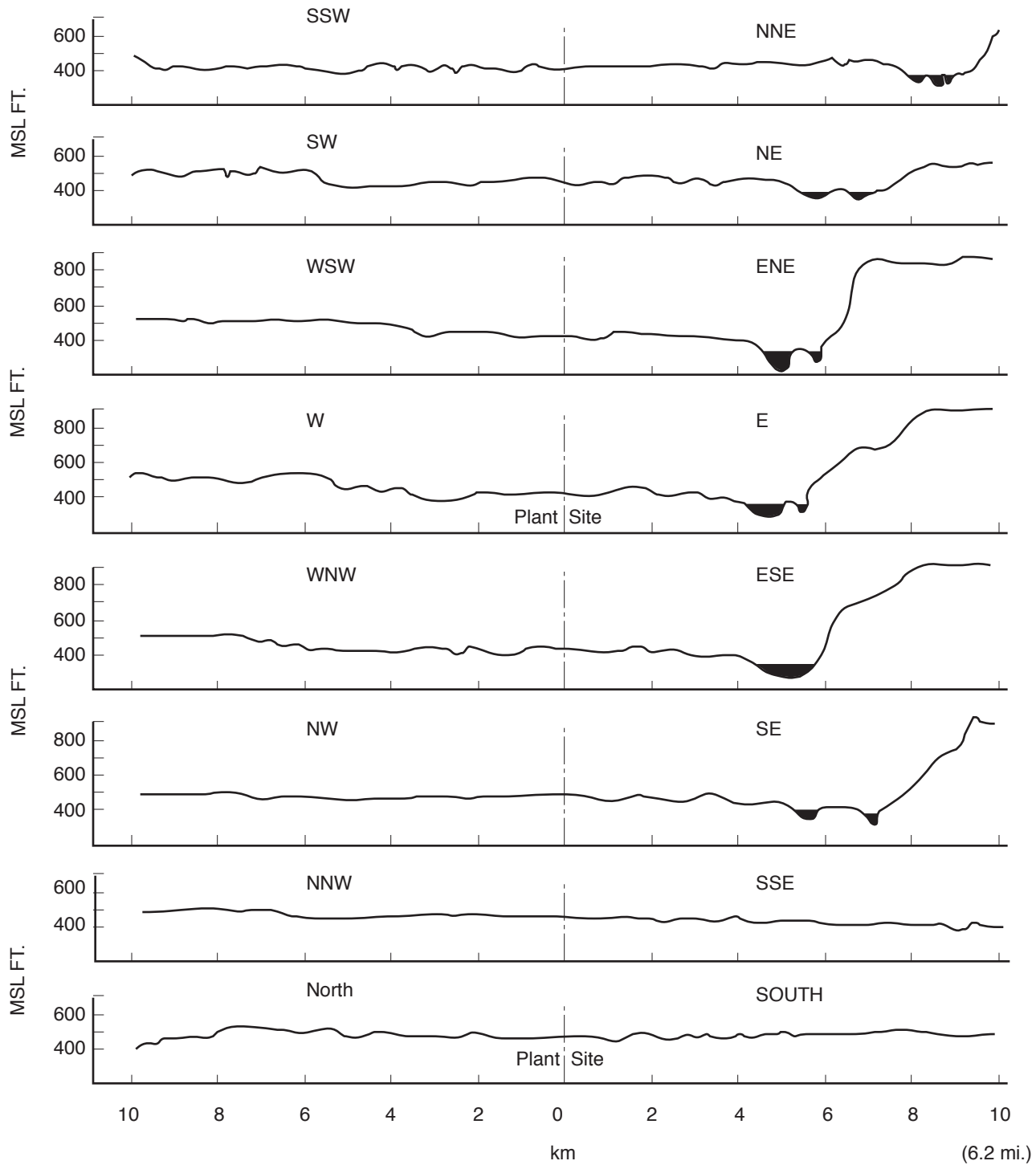

Columbia Generating Station
Final Safety Analysis Report

Topographic Cross Sections of Region Surrounding Site

Draw. No. 990306.23	Rev.	Figure 2.3-9

Monthly and annual hourly averages of Dry Bulb (D.B.) and Wet Bulb (W.B.) Temperature
Relative Humidity (R.H.) and temperature of the dew point (D.P.)
(1957-1970)

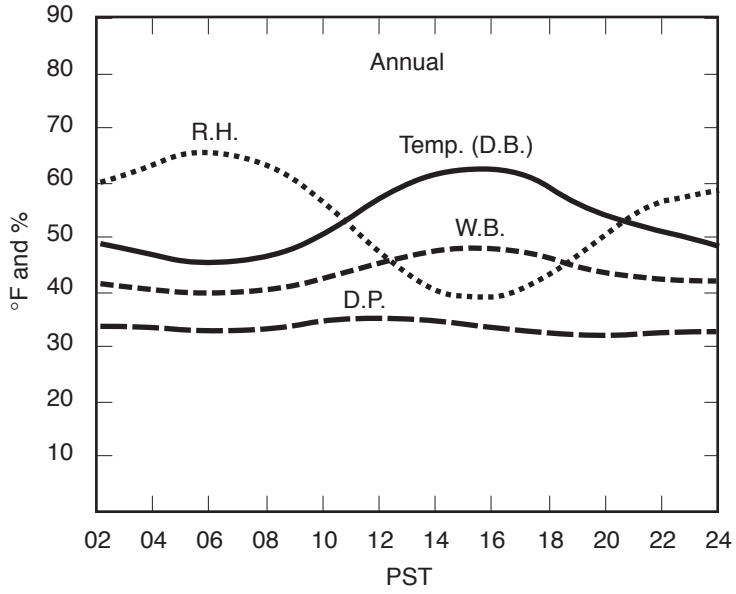

Columbia Generating Station
Final Safety Analysis Report

Yearly Hourly Average of Temperature and Relative Humidity

Draw. No.	Rev.	Figure
990306.24		2.3-10

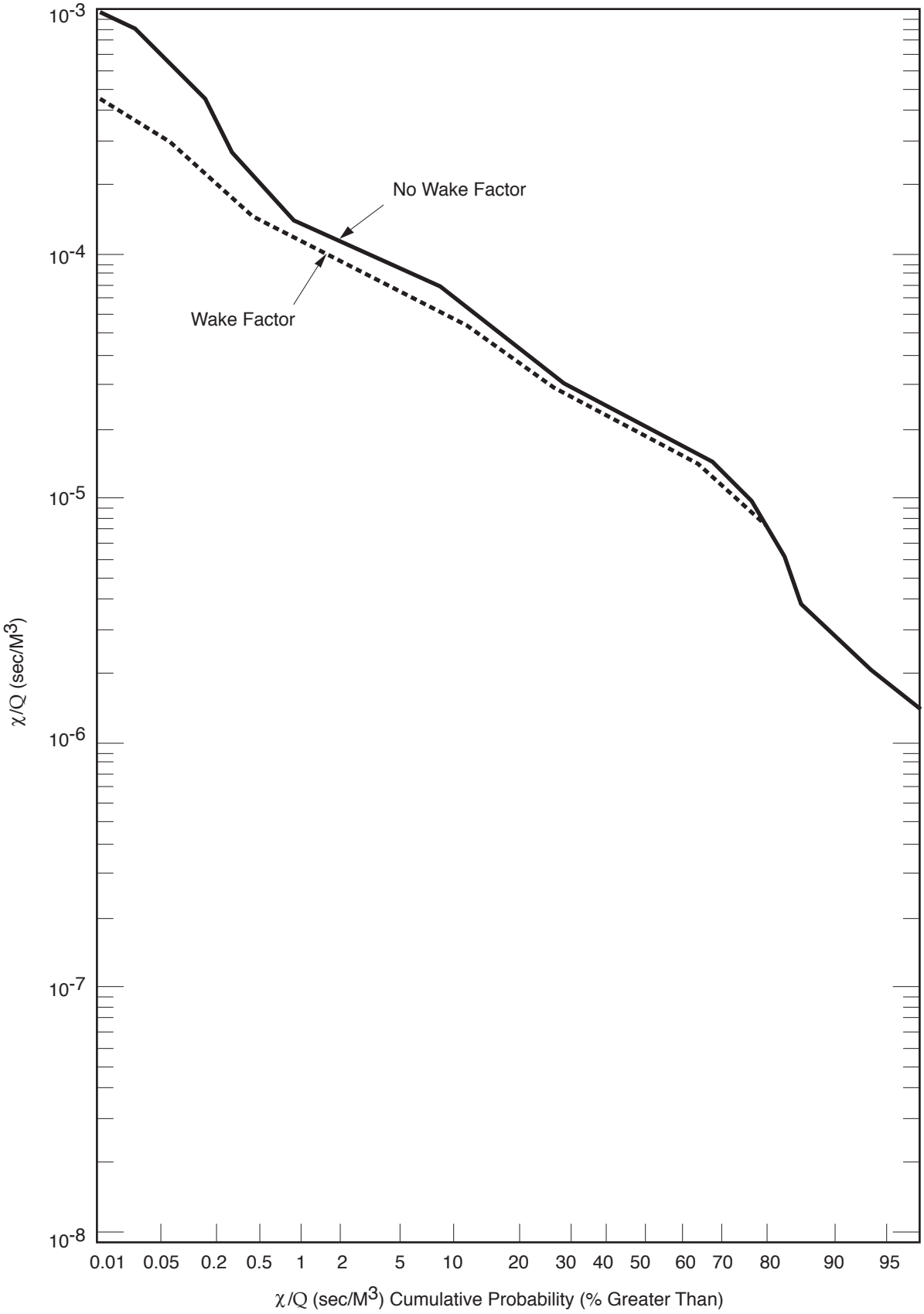

Columbia Generating Station
Final Safety Analysis Report

Cumulative (%) Frequency of Hourly Centerline (χ/Q at Site Boundary Circular Distance of 1.212 Miles From Source (April 1974-March 1975)

Draw. No. 990306.25	Rev.	Figure 2.3-11

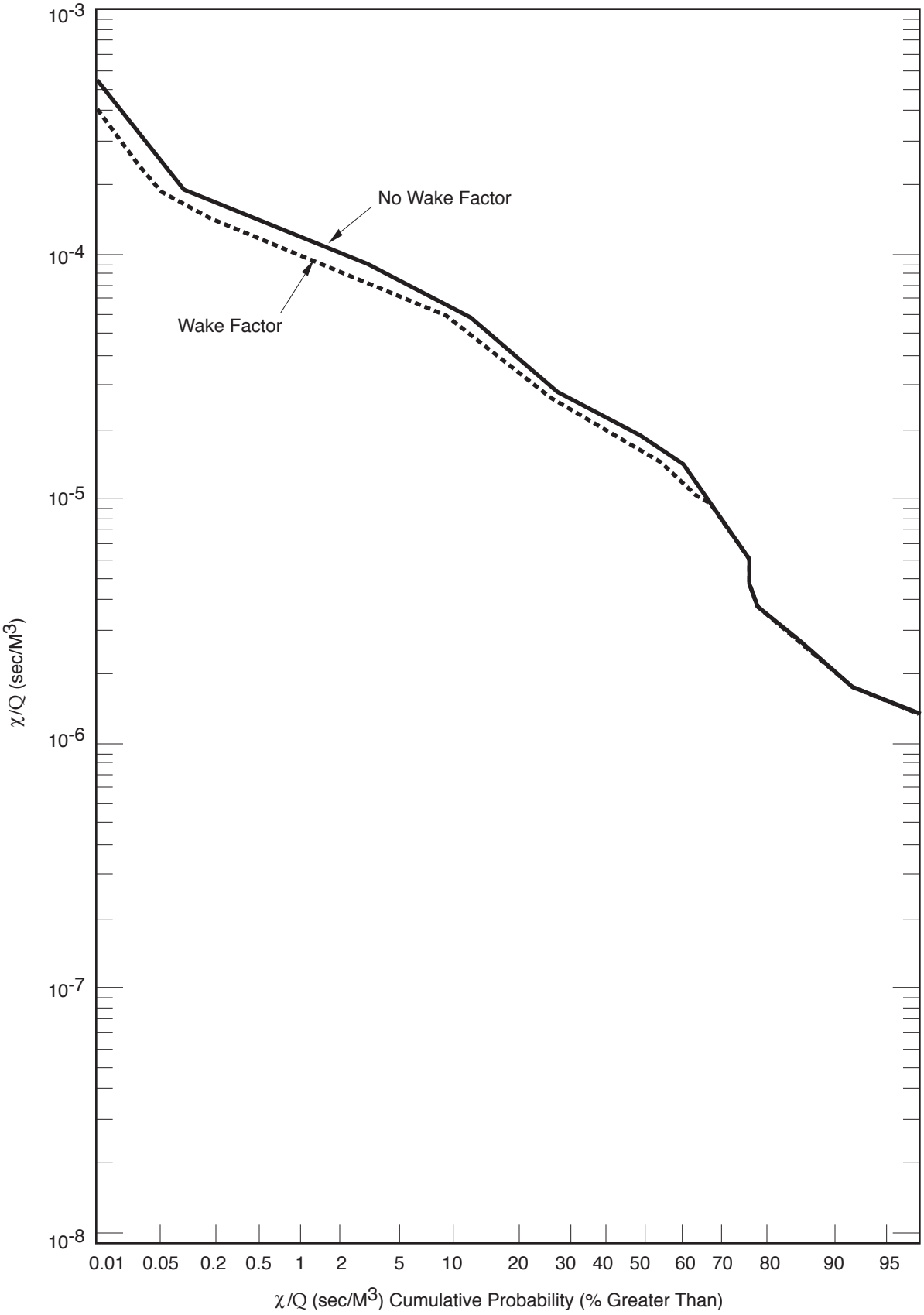

Columbia Generating Station
Final Safety Analysis Report

Cumulative (%) Frequency of Hourly Centerline (χ/Q at Site Boundary Circular Distance of 1.212 Miles From Source (April 1975-March 1976)

Draw. No. 990306.26	Rev.	Figure 2.3-12

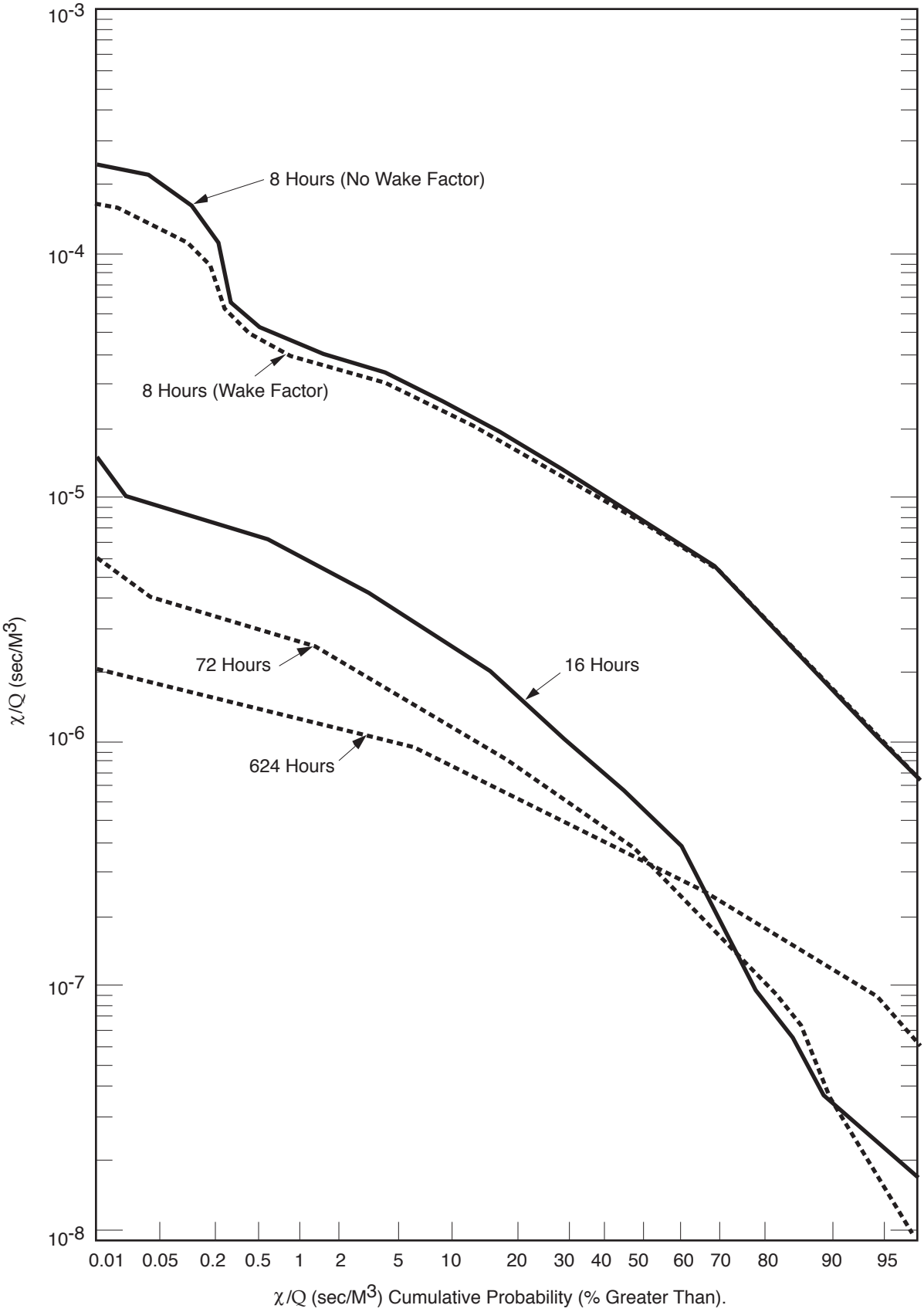

Columbia Generating Station
Final Safety Analysis Report

Cumulative (%) Frequency of Occurrence of (χ/Q for Postulated Accidents of 8, 16, 72, and 624 Hr at Outer Boundary of Low Population Zone (3.0 Miles from Source) (April 1974-March 1975)

Draw. No. 990306.27	Rev.	Figure 2.3-13

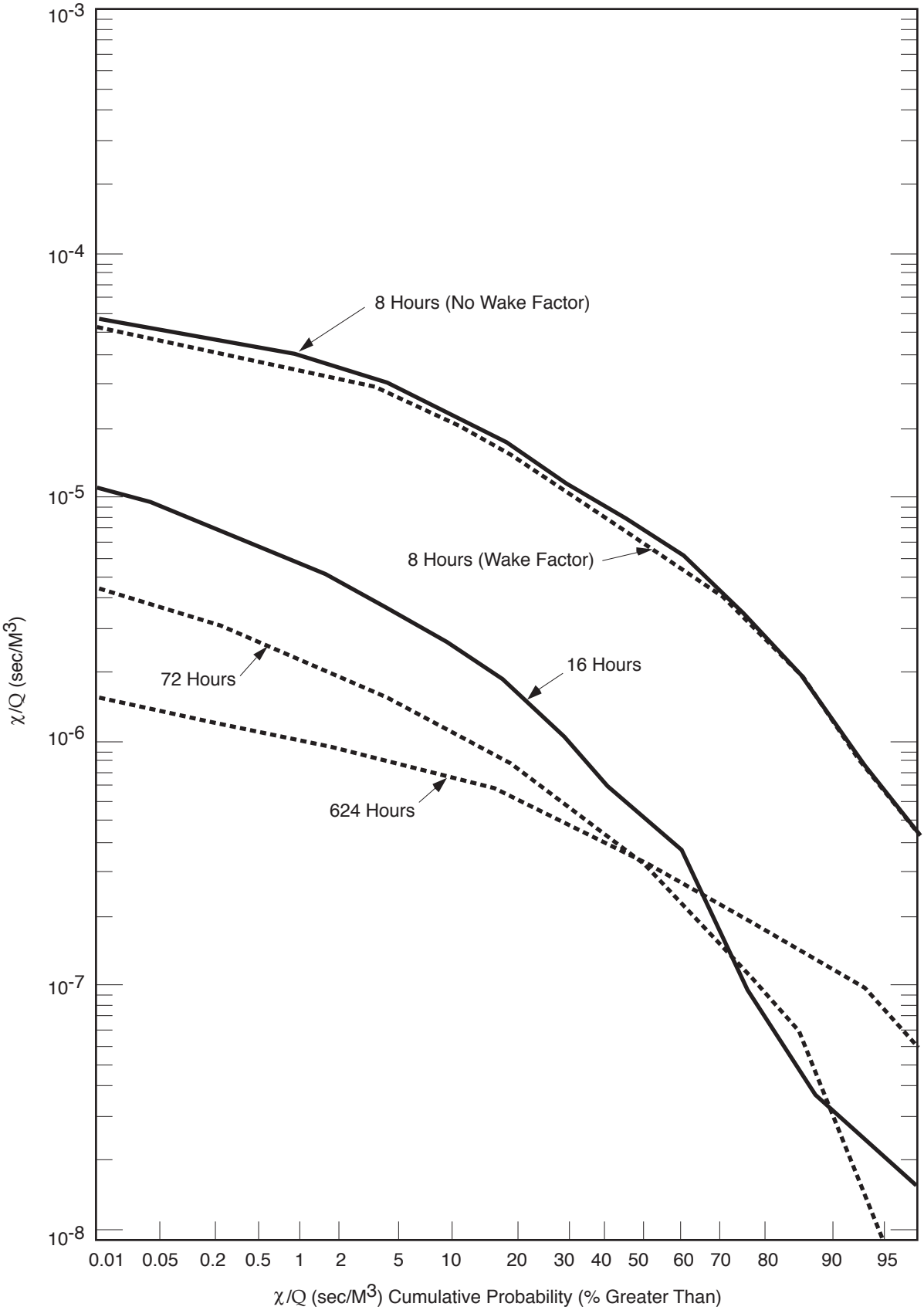

Columbia Generating Station
Final Safety Analysis Report

Cumulative (%) Frequency of Occurrence of (χ/Q for Postulated Accidents of 8, 16, 72, and 624 Hr at Outer Boundary of Low Population Zone (3.0 Miles from Source) (April 1975-March 1976)

Draw. No. 990306.28	Rev.	Figure 2.3-14

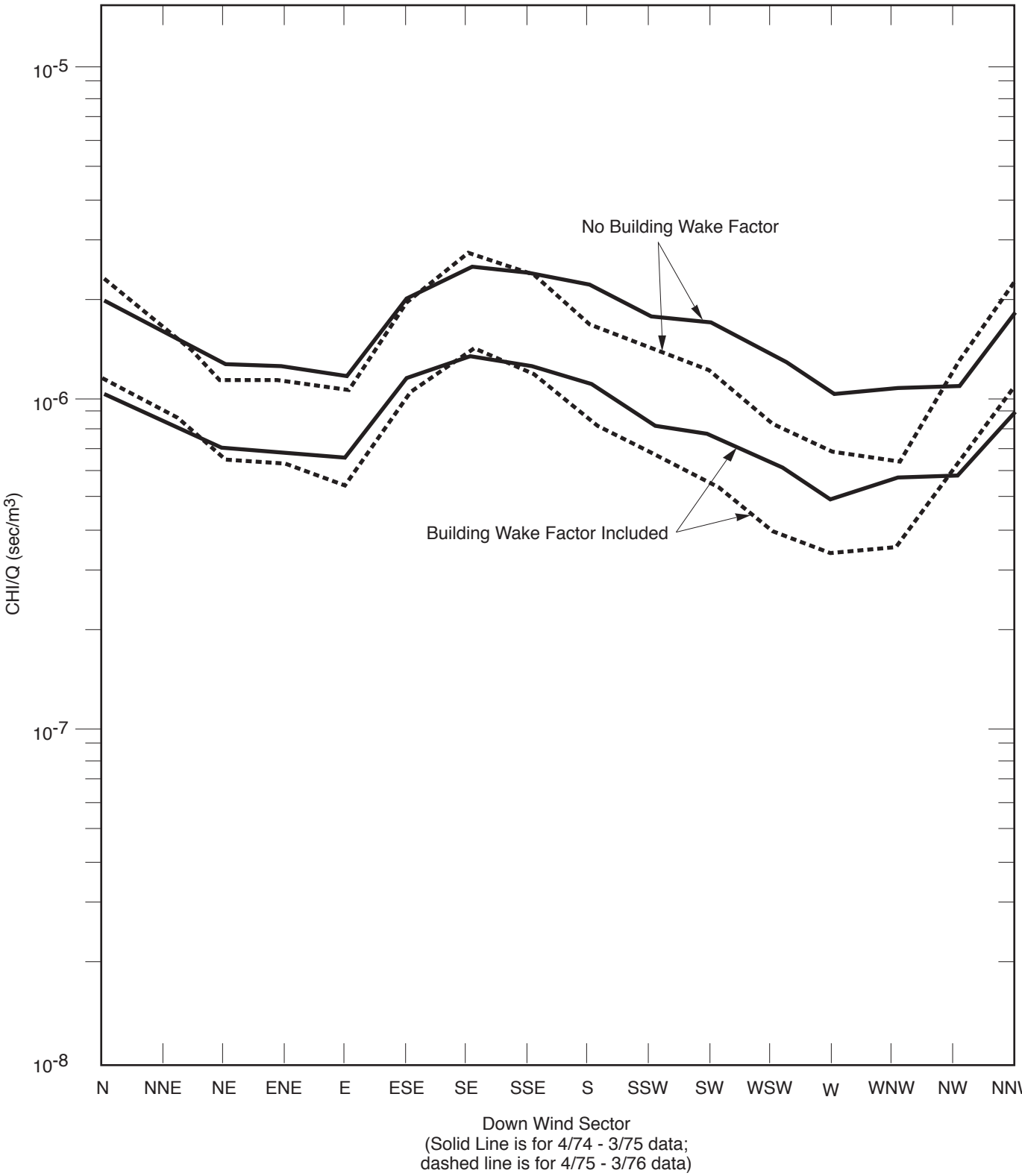

Columbia Generating Station
Final Safety Analysis Report

Annual Average χ/Q by Sector at the Site Boundary for First and Second Annual Cycle Data

Draw. No. 990306.29	Rev.	Figure 2.3-15

2.4 HYDROLOGY ENGINEERING

The italicized information is historical and was provided to support the application for an operating license.

2.4.1 HYDROLOGIC DESCRIPTION

2.4.1.1 Site and Facilities

Columbia Generating Station (CGS) is located in the Hanford Site within Benton County, Washington, approximately 3 miles west of the Columbia River at river mile (RM) 352, 10 miles north of Richland and 45 miles downstream from Grant County PUD Priest Rapids Dam. The site coordinates are approximately 46° 28' North Latitude and 119° 20' West Longitude.

The Columbia River is the predominant hydrologic feature of the area and provides principal drainage for the surrounding area. The riverbed is clearly marked in the terrain and at the proximity of the site the river flows between high banks. The Columbia River approximate riverbed elevation is 328 ft above mean sea level (msl); the ground elevation at the site is approximately 440 ft. Another hydrologic feature of the area is the Yakima River, which at its closest approach flows within 8 miles of the plant site. The river system is shown in the hydrographic map, Figure 2.4-1. Figures 2.1-1 and 2.1-2 show the major hydrologic features of the area.

All Seismic Category I structures are located above maximum postulated flood elevations. For flood elevations refer to Sections 2.4.3 and 2.4.4.

Water for cooling tower makeup water and other plant requirements is withdrawn from the Columbia River. The intake system is designed for a maximum capacity of 25,000 gpm (55.7 cfs). The non-safety-related makeup water intake system is approximately 3 miles east of the plant and is made up of two offshore perforated pipe inlets, two lead-in pipes, and pump house structure.

A topographic map and contour map of the region surrounding the site are shown in Figures 2.4-2 and 2.4-3. The natural drainage features of the surrounding area have not been changed by the construction of CGS.

2.4.1.2 Hydrosphere

The Columbia River, the largest river flowing into the Pacific Ocean from North America, is one of this world's greatest sources of hydroelectric power. Its annual discharge of 18,000,000 acre ft (1 acre-ft = 43,560 ft^3) is exceeded in the North American continent only by the Mississippi, Mackenzie and St. Lawrence Rivers.

The Columbia River drains an area of approximately 258,000 square miles, lying to the west of the Continental Divide in the northwestern part of the U.S. (85%) and southwestern part of Canada (15%). Major tributaries are the Kootenay, Snake, Pend Oreille, Spokane, Okanogan, Yakima, and Willamette Rivers.

In determining the Standard Project Flood (SPF) the drainage area was divided into subbasins. These subbasins can be grouped into six general areas with similar hydrometeorological characteristics.

The six areas are: (1) upper Columbia, which includes the drainage of the area in Canada and the northern part of the United States above Chief Joseph Dam; (2) Middle Columbia, which includes the area between Pasco and Chief Joseph Dam; (3) Upper and Middle Snake River; (4) Lower Snake River, the area between Weiser and Ice Harbor Dam; (5) Lower Columbia, including the area between Bonneville Dam and Pasco; (6) the Columbia below Bonneville Dam, including the Willamette River.

The river basin has five outstanding physical features: the Rocky Mountain System, the Columbia Plateau, the Columbia River Gorge, the Cascade Range and Puget Trough.

The Rocky Mountain System is the major range with elevations from 2000 to over 12,000 ft. There are permanent glaciers and extensive snow fields at higher elevations and deep valleys that provide the principal drainage for the head-waters of the Columbia, Kootenay and other rivers.

The Columbia Plateau is a great, generally treeless, semiarid plateau covering over 100,000 square miles in the central portion of the basin. This plateau is in an area between the Cascade Range and the Rocky Mountains. The plateau was formed by successive flows of lava and filled to a general thickness of approximately 4000 ft. The Columbia River flows 1214 miles from its source in Columbia Lake (el. 2700 ft) in British Columbia, near the crest of the Rockies, to the Pacific Ocean at Astoria, Oregon. It sweeps around the north and northwesterly sides of the Columbia Plateau to central Washington to be joined by the Snake River. The Columbia River flows directly across the axis of the Cascades in a narrow gorge to the Pacific.

The Columbia Gorge is the gateway from the Pacific Ocean to the intermountain Columbia Plateau. Tide flows 140 miles up-river. For most of its length the river flows in deep valleys and canyons.

High flows occur in late spring and early summer with melting of snow on the mountainous watershed. Low flows occur in autumn and winter.

The Columbia River has been regulated by dams and reservoirs over the past 35 years. A large portion of the main stream and major tributaries is developed to meet various

functional requirements, such as flood control, hydroelectric power, irrigation, municipal and industrial supply, etc. The regulation of Columbia River floods is accomplished by use of reservoir storage space provided primarily for irrigation or for hydroelectric power utilization. The volume of usable reservoir storage space is on the order of 20% to 25%.

There are seven dams upstream and four dams downstream of the site on the main stream of the Columbia River within the U.S. These dams are listed in Table 2.4-1. The Columbia River flow in the reach of CGS is controlled by regulation of the upstream reservoir projects, which have a total usable storage capacity of approximately 35 million acre-ft. Some control of flow in the immediate vicinity of the site is by regulation of the nearest upstream hydroelectric projects, Priest Rapids Dam, at RM 397, containing about 45,000 acre-ft of active storage, and Wanapum Dam, at RM 415, containing about 161,000 acre-ft of active storage. Some minimal effect on the river flow in the vicinity of the site is caused by McNary Dam, at RM 292, approximately 60 RM downstream from the site area.

Flows in the Columbia River during the summer, fall, and winter vary from a low of 36,000 ft^3/sec to as much as 160,000 ft^3/sec. During spring runoff high flows ranging from 250,000 ft^3/sec to 450,000 ft^3/sec have been recorded. The average annual flow is 120,000 ft^3/sec; during low flow periods flows may average about 60,000 ft^3/sec (see Figure 2.4-4).

The Grand Coulee and Bonneville dams were put into operation prior to World War II and several dams were built after the war. The four downstream dams include large locks to permit the passage of river vessels. Several of the dams provide emergency floodwater storage. Grand Coulee, the largest and most complex of the dams, augments the low winter flows for the entire system from its 9,402,000 acre-ft of available storage (of which approximately 5,100,000 acre-ft is active storage) and also pumps water to the Columbia River Irrigation Project.

The river channel near the CGS site varies between 400 and 600 yards in width for low water and normal high water level, respectively. The depth varies from about 25 ft to 45 ft for normal high water and flood high water levels, respectively. Velocities vary from 3 ft/sec to over 11 ft/sec depending on section and flow. Average water temperature is 51°F. Temperatures may reach a low of 32°F and a high of 68°F. (See Table 2.4-2 and Figure 2.4-4.)

A list of water usage downstream of CGS, obtained from records of the Department of Ecology, State of Washington, for water rights as of February 1980, is presented in Table 2.4-3. The closest municipal surface water user is the City of Richland with an intake approximately 12 miles downstream. *The location of local groundwater users is discussed in Section 2.4.13.2.*

2.4.2 FLOODS

2.4.2.1 Flood History

Floods in the Columbia River Basin are grouped as:

a. The interior basin east of the Cascades, caused by melting snowpack and occurring from May through June;

b. The Willamette and other basins, west of the Cascades, caused by direct runoff from intense winter rain occasionally augmented by snowmelt.

There is some overlapping effect within these two groupings. At certain elevations, basins in the interior Columbia drainage area occasionally have significant flood flows resulting from winter rain or snowmelt. These are local floods and do not usually contribute sufficient flow to cause flooding of the main Columbia River. Major floods in the Columbia River Basin result from rapid spring melting of the snowpack over a wide area, generally augmented by rain or by above-normal precipitation in May, accompanied by a major chinook wind which causes rapid area temperature rise. The annual spring snowmelt flood of the main interior basin is characterized by relatively uniform distribution over the basin. The snowfall and individual snow storms may vary, but the integration of all storms over the winter period smoothes the irregularities, with the result that the distribution of the flood runoff is reasonably constant from year to year.

The maximum historical flood of record is that of June 7, 1894, which resulted from a combination of hydrometeorologic conditions, including heavy snowpack and rapid melt plus rainfall. The peak discharge at CGS was 740,000 ft^3/sec for the Columbia River, as estimated from high water marks at Wenatchee, Washington (Reference 2.4-1). *The largest recent flood, occurring in 1948, had an observed peak discharge of 690,000 ft^3/sec at Hanford. These floods were spring floods resulting from the melt of a large snowpack combined with the spring rains (Reference 2.4-2).* Water surface profiles for the Columbia River in the vicinity of the site as derived by the Corps of Engineers (Reference 2.4-2) are given in Figure 2.4-5.

The plant site is located approximately three miles west of the Columbia River at RM 352 with reactor floor elevation of 441 ft msl, which is 68 ft above the water level estimated for the largest historical flood (approximately 373 ft msl). There is no record of flooding in the immediate site area.

2.4.2.2 Flood Design Considerations

Flood protection of safety-related components is based on the highest calculated flood water level including wave effects, resulting from intense local precipitation. Several different probable maximum events were considered, including the Corps of Engineers design-project

flood considered to be "the most severe reasonably possible." Wave action caused by storm winds, the effects of failure of upstream dam surge flooding, and ice flooding were also considered.

The results of these analyses (described in Section 2.4.3) indicate that the CGS site is safe from floods and that no flood protection measures are required. The Hydrogen Storage and Supply Facility located 0.6 miles south-southeast of the plant is subject to flooding due to the PMP flood discussed in Section 2.4.3.1. Equipment storing liquid and gaseous hydrogen has been analyzed for the effects of this flood (Section 2.4.2.3). As discussed in sections that follow, plant safety-related structures are located above high water elevations associated with Columbia River flooding (Sections 2.4.2.1 and 2.4.3), intense local precipitation (Sections 2.4.3.5 and 2.4.3.6), and upriver dam failures (Section 2.4.4).

2.4.2.3 Effects of Local Intense Precipitation

Intense local summer thunder storms can produce short duration rains which have the potential for causing serious flood. Winter precipitation may occur as rain or snow and would be less intense than the worst summer thunderstorm. The probable maximum precipitation (PMP) event for the CGS site has been determined using the methodology developed by the U.S. Weather Bureau and reported in Hydrometeorological Report No. 43, "Probable Maximum Precipitation, Northwest States" (Reference 2.4-3).

The plant area slopes easterly to a broad channel which is adequate to store and drain the PMP. Construction contours of the site are shown in Figure 2.4-28. The reactor building and the spray ponds are located at elevations that are safe from the effect of any flood resulting from the maximum precipitation event.

Winter precipitation may occur as rain or snow. The winter season snowfall has ranged from less than 0.5 in. to a maximum of 12 in. in December 1964. There is no ice accumulation at the site.

To accommodate surface drainage during severe climatic conditions such as rainfall and rapid snow melts, a system of catch basins and dry wells is provided with inlet elevations a minimum of 6 in. lower than the nearest road and a minimum of 12 in. lower than the finished floor elevation of the nearest building(s).

Runoff from the PMP event is accommodated by designing the roadways such that the high point of the road is 6 in. to 1 ft below the finished floor elevation of the adjacent safety-related building(s). Runoff from this event is from the northwest to the southeast across the site plateau to the low area southeast of the plant site. The general plant site is nominally 9 ft above the maximum calculated water surface elevation resulting from the postulated PMP (Section 2.4.3.3). Therefore, the site grading precludes the potential flooding of safety-related structures. The Hydrogen Storage and Supply Facility is subject to the PMP event flooding.

The elevation of the facility is 420 ft msl and the PMP flood level is 431.1 ft msl (Section 2.4.3.5). See Section 10.4.10 for more discussion.

Roofs of buildings are designed to take, with adequate drainage, any instantaneous or local intense precipitation. Discharge from roof drains is carried by means of a storm sewer system to a manhole located southeast of the reactor building. From that point a pipeline with a northeast alignment transfers the discharge to lined evaporation ponds about 1500 ft away from the plant site.

The roofs of safety-related buildings (diesel generator building, radwaste/control building, standby service water pump house) are concrete beam and slab construction except the high roof of the reactor building, which is metal deck on steel framing. The minimum roof slope for all structures is 1/8 in. per ft for adequate drainage and the roof areas are encompassed by curbs or parapet walls up to 3 ft 6 in. high. Roof plans, including details of roof drains and overflow scuppers, are provided in Figure 2.4-6. Assuming that the roof drains are completely blocked during the PMP event, overflow scuppers limit the depth of water to within the design load carrying capability of the roofs. Those safety-related structures that do not have this relief capability structurally can carry the entire PMP accumulations.

2.4.3 PROBABLE MAXIMUM FLOOD ON STREAMS AND RIVERS

Analyses for probable maximum flood (PMF) and SPF on the Columbia River (Reference 2.4-2) are consistent with the requirements of Regulatory Guide 1.59, Revision 2. The SPF for the Mid-Columbia Reach of the highly developed and regulated Columbia River is defined as 570,000 ft^3/sec (Reference 2.4-4). The unregulated SPF for the same reach is 740,000 ft^3/sec. The unregulated PMF at the site is estimated to be 1,600,000 ft^3/sec (References 2.4-2, 2.4-4, and 2.4-5).

Adjustment of the flood profiles for the Hanford region reported in Reference 2.4-4, results in a regulated PMF of 1,440,000 ft^3/sec and a water level of 390 ft at the Seismic Category II makeup water structure. This structure is not designed to function throughout the PMF but is designed for the SPF (unregulated) of 740,000 ft^3/sec.

Although assumed to exist for the purpose of flood hydrograph calculations, Ben Franklin Dam is not a federally authorized project. As originally planned it would have been a low head dam with only a negligible effect on extreme flood flows (Reference 2.4-6).

The design basis flood for the CGS site area results from the PMP event on the adjacent drainage basin and not from flooding of the Columbia River.

2.4.3.1 Probable Maximum Precipitation

The PMP event which was presented in the CGS PSAR was subsequently reevaluated in the preparation of the PSAR for WPPSS Nuclear Project No. 1 (Docket 50-460). The analysis presented here is consistent with the latter document.

Precipitation in the vicinity of the site has been classified by the U.S. Weather Bureau, Reference 2.4-3, as convergence precipitation, orographic precipitation, and thunderstorm precipitation. The methodology for predicting the total amount of precipitation from each of these events, as given in Reference 2.4-3, requires the adding together of the convergence PMP and the orographic PMP to obtain a single precipitation for a general storm. A separate analysis is then required for thunderstorms. Thunderstorms in the vicinity of the site can be locally very intense for short periods of time and hence, have the potential for causing serious flooding. The PMP for both a general storm and a thunderstorm were analyzed as given in Chapters 6 and 5, respectively, of Reference 2.4-3 for a 38.5 mile^2 basin at the site. This basin is shown in Figure 2.4-8 and is described in Section 2.4.3.3. The calculated general storm PMP results in a 24-hr and 48-hr precipitation of 7.9 in. and 10.1 in., respectively. A thunderstorm PMP yields 9.2 in. in a 6-hr period. Therefore, the thunderstorm is considerably more severe. The thunderstorm PMP hydrograph is

Time (hr)	Rain (in.)
1	0.6
2	1.6
3	5.2
4	0.9
5	0.5
6	0.4
Total	9.2

2.4.3.2 Precipitation Losses

Infiltration losses have been estimated in the vicinity of the sites as 1.5 in./hr (Reference 2.4-7). However, for the analysis below, an average antecedent moisture condition (Condition II as defined in Reference 2.4-8) was assumed. As explained in the following section, the 60-minute retention loss rate is 0.15 in./hr.

2.4.3.3 Runoff and Stream Course Models

The drainage basin common to the reactor building and spray ponds is shown in Figure 2.4-8. The entire area drains to a broad channel that extends in a north-south direction for about 7 miles, and ranges from about 2000 ft to over a mile wide. All plant structures are located on

high ground to the west of the channel. At a point about 2.8 miles south of the reactor site, the four-lane Department of Energy (DOE) highway crosses the drainage basin. The area above this section is 33.2 miles^2.

To evaluate the effect of the PMP event on the plant area, the peak discharge at the highway crossing, 2.8 miles downstream of the plant, was calculated using the U.S. Bureau of Reclamation procedure for computing design floods on ungauged basins from thunderstorm rainfall in the western U.S. (Reference 2.4-8). Important assumptions used in the triangular hydrograph procedure of Reference 2.4-8 are

a. Hydrologic soil group B,

b. Land use and treatment class - poor pasture or range,

c. Thunderstorm cover-index is brush-sage-grass combination with 50% or less cover density, and

d. Thunderstorm minimum 15-minute retention loss rate of 0.06 in./15 minutes and 60-minute retention loss rate of 0.15 in./hr.

Additionally, no credit was taken in the hydrograph analysis for potential storage in the stream channel or upstream sub-basins.

The time of concentration, T_c, for the watershed above the highway crossing was computed to be 7.5 hr. The PMF hydrograph is shown in Figure 2.4-7 for the 33.2 mile^2 drainage basin. A peak discharge of 21,400 ft^3/sec was determined.

Based on this PMF, an upstream water surface profile was determined using the Corps of Engineers HEC Standard-Step Procedure (Reference 2.4-9). A total of eleven cross sections were used (seven downstream, one at the plant, and three upstream as shown in Figure 2.4-3). Details of the channel cross sections are shown in Figure 2.4-9. The Manning roughness coefficient was conservatively taken as n=0.035 in the main channel sections, and n=0.05 in the overbank areas.

Using the computational procedure of Reference 2.4-9, it was determined that the channel restrictions at cross sections 5 and 7 (Figure 2.4-3) do not control the flow. The stillwater elevation at the plant site (cross section 8) was determined to be 431.1 ft msl. The water surface profile is shown in Figure 2.4-10.

2.4.3.4 Probable Maximum Flood Flow

The PMF runoff hydrograph produced by the PMP at cross section 1 (Figure 2.4-3) is shown in Figure 2.4-7. The peak discharge at this location is 21,400 ft^3/sec.

2.4.3.5 Water Level Determinations

As discussed in Section 2.4.3.3, the water elevation of a flood at the plant site generated by the PMP event is 431.1 ft msl. This flood condition has a higher estimated elevation than any flood of the Columbia River.

2.4.3.6 Coincident Wind Wave Activity

Procedures published by the Corps of Engineers (References 2.4-10 and 2.4-11 were used to determine the wind wave activity. The effective fetch for the predominant July wind direction (north) is 3450 ft (0.65 miles). The effective fetch diagram is shown in Figure 2.4-11. The calculated extreme 2-year over water wind for the north-to-south direction, based on area data, is 63.5 mph. This wind results in a maximum wave height of 4.0 ft, with the assumption of a water depth of 12 ft (the average depth in cross sections 8, 9, and 10). The other potential wind directions ENE and ESE were evaluated but found to be less severe.

The wind setup has been computed to be 0.3 ft, and the maximum wave runup is 1.9 ft on a smooth, 1 on 8 slope of compacted naturally occurring sands and gravels. Therefore, the design water surface elevation is 433.3 ft msl. This is less than the east spray pond overflow weir at elevation of 434.5 ft msl.

2.4.4 POTENTIAL DAM FAILURES, SEISMICALLY INDUCED

Analyses of floods resulting from potential dam failures were investigated by the Corps of Engineers for the Columbia River. These studies are consistent with Regulatory Guide 1.59, Revision 2. The flood resulting from the breaching of Grand Coulee Dam is considered in lieu of a seismically induced flood.

In 1951, the Seattle District Corps of Engineers made a confidential study (now declassified) to determine artificial flood hydrographs and the flood profile in the Columbia River Valley resulting from breaching the Grand Coulee Dam by enemy attack. The studies covered a spectrum of conditions in terms of breach openings and hydrologic conditions that might prevail at the time of attack. A postulated seismic failure of Grand Coulee Dam could result in displacement of part of the structure, but it would still act as a restriction or weir and minimize the hydraulic failure. For this reason, the explosion-induced artificial flood represents an upper limit to seismically induced failures. The failure of Grand Coulee Dam would initiate a catastrophic flood, which would be augmented by the failure of the earth portions of downstream dams and subsequent release of the storage pools. Figure 2.4-5 shows water surface profiles for RM 323 to RM 358 for various river flows, including Artificial Flood No. 1. This flood provides a "limiting case" assessment of the conservatism of CGS elevation. This flood would have an outfall peak of 8,800,000 ft^3/sec at Grand Coulee Dam at the moment of breaching and a peak discharge at RM 338 (Richland) of 4,800,000 ft^3/sec.

A base flow of 50,000 ft^3/sec was assumed above the mouth of the Snake for this flood (Reference 2.4-12).

An arbitrarily assumed dramatic failure of Arrow and/or Mica Dams in Canada could result in greater releases of storage in terms of volume than that from the Grand Coulee Dam, but the effects of such postulated releases are mitigated by a combination of valley storage and critical (flow limiting) valley cross sections. The Corps of Engineers states (Reference 2.4-13) that the river channel restrictions at Trail, British Columbia, would restrict river flow to about 3.1 x 10^6 cfs, regardless of the postulated dam failure. A major failure upstream would result in this maximum flow for many days causing overtopping of Grand Coulee Dam. An analysis by the Bureau of Reclamation (Reference 2.4-14) concluded that overtopping which might result from the failure of upstream dams will not cause failure of either the Grand Coulee Dam or the Forebay Dam.

Various studies (References 2.4-12, 2.4-15, 2.4-16 and 2.4-17) made by the Corps of Engineers, and others, since 1951 have considered that breaching of Grand Coulee Dam would represent the worst catastrophic event for downstream Columbia River occupants. Although these studies bear no relationship to flooding from natural causes, they have been used as the basis for a very conservative, limiting case approach.

Figure 2.4-5 shows water surface profiles for RM 323 to RM 395 for artificial and real stage flows, one of which corresponds to Artificial Flood No. 1 noted earlier, which has been established (Reference 2.4-18) as conservative (limiting case) criteria for Columbia River flooding. Since the base flow used to develop these curves was 50,000 ft^3/sec, an additional 570,000 ft^3/sec is added to account for simultaneous occurrence of the regulated SPF.

2.4.4.1 Dam Failure Permutations

The effect of potential dam failure on the water levels at the site is determined using the following assumptions:

a. The Columbia River is at flood stage, with a SPF (570,000 ft^3/sec regulated);

b. The reservoirs in each storage pool are full;

c. A massive hydraulic failure occurs at Grand Coulee Dam, releasing 8,800,000 ft^3/sec;

d. Following the above assumed failure, all downstream dams between CGS site and Grand Coulee Dam suffer some degree of failure and release their storage reservoirs to the flood. [The result of a stability analysis (Reference 2.4-15) showed that all mass concrete portions of the dams will resist sliding and overturning with the possible exception of part of Rock Island Dam.];

e. The explosion-induced failure of Grand Coulee Dam represents a more severe failure than any seismic event because of the failure mechanism;

f. Failure of Arrow and/or Mica Dam could result in greater release of storage volume than Grand Coulee Dam; however, the peak flow is limited to 3,100,000 ft^3/sec due to channel restrictions at Trail, British Columbia; and

g. Overtopping of Grand Coulee Dam would occur with failure of Arrow and/or Mica Dams in Canada. The failure of Grand Coulee, as a result of overtopping, is not considered to be a credible event in view of its concrete construction and rock abutments.

2.4.4.2 Unsteady Flow Analysis of Potential Dam Failures

The flood hydrographs developed by the Corps of Engineers are based on the results of extensive studies of the physical characteristics of the flood route (References 2.4-12 and 2.4-15). Subsequent studies made by the Corps of Engineers verify these results (Reference 2.4-17). Water levels following such a flood would depend on the status of reservoir storage upstream from Grand Coulee Dam but, without regulation of some dams, would approximate the natural seasonal flow conditions.

2.4.4.3 Water Level at Plant Site

The water elevations associated with limiting case flood (LCF) levels are shown in Figure 2.4-5. RM 350 provides the control for backwater flow to the plant area which is sheltered by higher ground east of WNP-1 and WNP-4.

Elevation at RM 350 (dam breach flood 4,800,000 ft^3/sec plus SPF, 570,000 ft^3/sec)	=	422 ft msl
Allowance for simultaneous wind and wave action	+	2 ft
Elevation:		424 ft msl = LCF

An adequate margin exists between the resultant flood elevation and the plant elevation of 441 ft msl.

2.4.5 PROBABLE MAXIMUM SURGE AND SEICHE FLOODING

The location of the CGS site is not close to any water body which experiences seiche flooding. Thus the site is not vulnerable to such flooding.

2.4.6 PROBABLE MAXIMUM TSUNAMI FLOODING

The location of the CGS site is in south-central Washington and it is not adjacent to any coastal area. It is not, therefore, vulnerable to tsunami flooding.

2.4.7 ICE EFFECTS

Historically, the Columbia River has never experienced complete flow stoppage or significant flooding due to ice blockage. Periodic ice blocking has caused reduced flows and limited flooding for only relatively short periods of time. *The most significant icing in recent recorded history occurred during the winter of 1936-37 prior to the construction of the upstream regulating dams. A relatively thick sheet of ice formed across the river. The minimum flow recorded near the Priest Rapids Dam site during this winter was 20,000 cfs. However, the ice forming on the river was caused primarily by the low flow rather than the reverse. The deltaic mouths of many of the tributaries to the Columbia River are frequently blocked by ice causing backup of flood waters. No instance of complete stoppage is known to have occurred.*

Ice blockage is most likely to occur when water temperatures are already low, when flows are small, and when a significant cold spell occurs. With the completion of Grand Coulee and other dams on the Columbia River main stream, the seasonal temperature and flow cycles have drastically changed. These changes will further aid to reduce the intensity and timing of the conditions which may contribute to potential ice blockage and flooding situations. Also average river flow rates, during the winter months, have been increased significantly. The water temperatures have shown a shift in time such that the peak temperatures occur 30-45 days later than formerly. In addition, the low extreme temperatures measured have risen over the years.

The long term trends of temperatures in the Columbia River been studied (Reference 2.4-19) using a 37 year record of measured temperatures. The trends for the maximum, average and minimum temperatures are shown in Figure 2.4-12. The erection of dams on the upper Columbia River has caused the extreme high and low river temperatures measured at Rock Island Dam (Columbia RM 453, 101 miles above the CGS site) to converge toward the average. Winter water temperatures are considerably warmer and summer temperatures cooler with a slightly lowered average of less than 1°F occurring during the 37 years.

On the basis of these studies and the recorded observation of 25 years of operation of the Hanford plutonium production plants, it is concluded that the potential for ice blockage or the combination of blockage and flooding behind ice dams is so low as to be considered insignificant. The erection of Mica, Arrow, and Libby Dams in the Columbia River Basin headwaters is expected to further raise winter water flows and also to increase winter water temperatures somewhat.

In any event, ice flooding will not effect the capability to shut down the reactor in a safe and orderly manner. Also, the daily fluctuating stage of the river at the intake location will discourage formation of sheet ice as well as ice jams. Ice flows, should they occur, will normally pass over intake structure due to relatively high winter discharge in the river.

2.4.8 COOLING WATER CANALS AND RESERVOIRS

There are no cooling water canals. The two spray ponds located southeast of the reactor building designed as Seismic Category I structures, have reinforced concrete side walls, and reinforced concrete base mats at el. 420 ft msl. The finished grade at the spray ponds is approximately at el. 434 ft msl and have top of wall elevations of 435 ft msl. The spray ponds are the ultimate heat sink for normal reactor cooldown and for emergency cooling.

The spray ponds are a part of the standby service water system which is discussed in Section 9.2.7. See also Section 2.4.11.6.

During normal reactor operation, the cooling water necessary for the plant is supplied from the cooling tower basins.

2.4.9 CHANNEL DIVERSIONS

The Columbia River flow in the Hanford reach is controlled to a large extent by regulation of the upstream reservoir projects. The riverbed in the vicinity of the site is well defined and it is very unlikely that the riverbed would be diverted from its present location by natural causes. Any possible effect on water supply to the makeup water pump house from riverbed changes would come from extremely slow changes which can be corrected if and when they occur.

As discussed in Section 2.4.7, the river has not frozen over in Hanford reach during at least the past 25 years, and icing on the river has not been a problem at pump house or outfall structures associated with the plutonium production plants.

2.4.10 FLOODING PROTECTION REQUIREMENTS

The design considerations of safety-related facilities to withstand floods and flood waves are described in Section 2.4.2.2. The PMF is discussed in Section 2.4.3.

All safety-related facilities are housed in Seismic Category I structures protected from flooding and designed to withstand the static and dynamic forces of all postulated floods. Flood considerations are described in Section 3.4 and the design of Seismic Category I structures, for all conditions including flood, is described in Section 3.8.

In the event of a flood at the site, it will be possible to place the plant in a safe shutdown condition.

All non-safety-related facilities with the exception of the makeup water pump house, are above the LCF elevation. The flooding of the makeup water pump house would not affect safety-related equipment and would not affect the safe shutdown of the plant. The approximate finished grade at all Seismic Category I structures except the spray ponds is at elevation 440 ft msl. The finished grade of the spray ponds is 434 ft msl.

The PMF elevation of the Columbia River (described in Section 2.4.3), at the site, is estimated to be 390 ft msl.

Seismic Category I structures are designed to withstand the static and dynamic forces which could result from a flood due to a breach of Grand Coulee Dam. Since this represents the LCF, the structures are also considered secure against the forces due to the lower PMF.

The access openings to all seismic Category I structures are located well above all flood water elevations, including that due to wind and wave action.

2.4.11 LOW WATER CONSIDERATIONS

As described in Section 2.4.1.1, plant water needs are supplied through an intake structure in the Columbia River. The top of the makeup water intake screens (at RM 352) are set below the water surface elevation that would be associated with the minimum allowable flow (36,000 cfs) at the federally licensed Priest Rapids Dam (at RM 397). Water levels at the CGS intake are not influenced by backwater from the downstream McNary Dam (RM 292). The Columbia River Basin upstream of CGS has in excess of 35 million acre-ft of usable reservoir storage capacity. Because of this storage and highly regulated river flows, it is improbable that flows below the licensed minimum will occur. Based on data for 1961 through 1994, 7-day low flow with a recurrence interval of 100 years has been estimated at 44,500 cfs.

Even if some event (e.g., very severe drought) caused the makeup water system to be inoperable, the loss of water would not compromise the safe shutdown of the plant. As is discussed in Sections 9.2.5 and 9.2.7, shutdown cooling water is supplied by the ultimate heat sink which contains a 30-day supply of water in two spray ponds. The only scenario in which the makeup water pump house is called on to supply water in an emergency situation is when a tornado removes a significant quantity of spray pond water (see Section 9.2.5.3). Therefore, the low river water condition is not a situation requiring safety-related features and procedures.

2.4.11.1 Low Flow in Streams

Reservoir projects on the Columbia River Basin upstream of the proposed site have a total usable storage capacity in excess of 35 million acre-ft. This capacity is sufficient to maintain a flow in the Columbia River, at the proximity of CGS, of 36,000 ft^3/sec for over 1 year with absolutely no inflow from other sources. Because of this regulation, the anticipated minimum

and maximum monthly mean flow rates will be 60,000 and 260,000 ft^3/sec in the vicinity of the site. It is improbable that minimum flows below that administratively set for dam operation (36,000 ft^3/sec) will occur due to drought conditions. Columbia River storage measurements have been extrapolated down to 25,000 cfs and are shown in Figure 2.4-13. The river elevation at RM 352, site of the CGS makeup water pump house, is 341.73 ft msl and has a corresponding flow of 36,000 ft^3/sec.

2.4.11.2 Low Water Resulting From Surges, Seiches, or Tsunami

There exists no possibility of low water conditions resulting from meteorological or geoseismic generated surges, seiches, or tsunami unless such natural phenomena effected rapid closure of the Priest Rapids Dam, which is located 45 miles upstream from the proposed site. Rapid closure of the dam would cause a negative surge to be generated downstream.

A complete stoppage of flow is an unlikely event because of the redundant equipment and operational procedure in place at the dam. Provisions to guard against an accidental shut off of Priest Rapids Dam include:

a. A gate actuation button in the control room of the Dam which is used to maintain at least minimum licensed flow from the facility in the event of one or more turbine shutdowns.

b. Independent motors on each gate which have redundant wiring and power supplies.

c. Electrical heating on four of the gates to prevent ice buildup which might interfere with gate operation.

d. Multiple offsite power sources in addition to an on-site diesel generator power backup for gate operation.

In the event of a rapid and complete stoppage of flow over Priest Rapids Dam the effect of the negative surge would pass the site in a few hours. Since the Priest Rapids Dam is a run of the river dam with low storage capacity, it is unlikely that its closure can restrict the Columbia River flow for a significant period of time before being topped.

2.4.11.3 Historical Low Water

Historical records of the U.S. Geological Survey gauging station (RM 394.5) located 2.6 miles downstream from Priest Rapids Dam show low daily averaged flows of 20,000 ft^3/sec (January 31, 1937) and low monthly averaged flows of 20,900 ft^3/sec (February 1937). An instantaneous low flow of 4120 ft^3/sec occurred February 10, 1932, due to activities connected with dam regulation of the river near Wenatchee, Washington, before construction of Priest

Rapids Dam. After completion of the Dam in 1956, the minimum flow rate of the Columbia River at RM 352, approximate location of the CGS makeup water pump house site, is 36,000 ft^3/sec. The flow is maintained by the Grant County PUD as operator of the Priest Rapids Dam (RM 397) under FPC license which states:

> *"The licenses shall so regulate the flow from the Project 2114 that it will not result in flows of less than 36,000 cfs of water at the Hanford Works of the Atomic Energy Commission except when conditions are beyond the licensee's control."*

In eighteen years of operation the flow has not dropped below the specified minimum.

The annual average flow of the Columbia River below Priest Rapids Dam is in the range of 115,000 cfs. The effect of use of upstream water for irrigation development on the stream flow has been taken into account and the modified mean monthly discharge variations for the period 1928-58 are shown in Table 2.4-4 and Figure 2.4-14. The discharge for the base period of 1929-58 was adjusted to reflect 1970 levels of water utilization, including water consumption due to activities of flood control, power generation and irrigation. Figure 2.4-15 shows the exceedance frequency for annual low flows for the period 1929 through 1958 with 1970 conditions measured at the gauging station (RM 394.5) immediately below Priest Rapids Dam. Because of the flow regulation on the Columbia River, the anticipated minimum and maximum monthly mean flow rates will approximate 60,000 and 260,000 cfs in the vicinity of the CGS site. The variations of the river flow in this reach are due not only to seasonal fluctuations, but also to the daily regulation of the power producing Priest Rapids Dam. Flow rates during the late summer, fall and winter may vary from a low of 36,000 cfs to 160,000 cfs each day.

The dependable yield for flows in the Columbia River below Priest Rapids Dam for periods of one year through 10 years, as well as the 30-year period 1929-58 is illustrated in Table 2.4-5. The flow duration curve resulting from a plot of Table 2.4-4 is shown by Figure 2.4-14 (Reference 2.4-20). This figure illustrates the percentage of time equaled or exceeded for different amounts of flows below Priest Rapids Dam on a monthly and on an annual basis.

2.4.11.4 Future Controls

Flows in the Columbia River at Hanford are required to be maintained above 36,000 ft^3/sec. This is the licensed minimum flow of Priest Rapids Dam and, as such, is a parameter closely monitored and controlled by the Grant County PUD. The State of Washington has administratively set higher average daily minimum flows (greater than 40,000 ft^3/sec) and will attempt to have the FERC licenses for the dams modified to insure the minimums (Reference 2.4-21).

2.4.11.5 Plant Requirements

All cooling water is supplied to the plant cooling towers via the circulating water system, the plant service water system, or the standby service water system described in Sections 9.2.1.2 and 10.4.5. In the event of an incident rendering the cooling towers inoperative, cooling water is supplied from the spray ponds by the standby service water system, described in Section 9.2.7. These are closed loop systems and the only water loss is through evaporative cooling.

Makeup to the plant cooling towers and spray ponds comes from the Columbia River. Should this capability be lost, the cooling load is taken over by the spray ponds. These ponds have sufficient capacity to provide shutdown cooling water for 30 days without makeup. Other sources of water are available to provide makeup after the initial 30-day period (see Section 9.2.5). Therefore, variation in river flow will not have any adverse affect on the capability to shut down the reactor in a safe and orderly manner.

2.4.11.6 Heat Sink Dependability Requirements

At the minimum river flow of 36,000 ft^3/sec described in Section 2.4.11.3, there is still sufficient submergence at the makeup water pumps to provide full makeup water requirements at full power operation. Sump level indication and low level alarms are provided in the main control room. Should the sump water elevation fall below the minimum submergence level for the makeup pumps, due either to low river flow or blocked inlets, the plant would be shut down if the situation could not be readily corrected with the safety-related standby service water coming from the spray ponds.

Section 9.2.5 discusses the design bases used in designing the two spray ponds which serve as the ultimate heat sink for CGS. Design of the CGS ultimate heat sink is in compliance with the guidelines presented in Regulatory Guide 1.27 Rev. 1, "Ultimate Heat Sink for Nuclear Power Plants," dated March 1974. The CGS spray ponds serve as the suction source and discharge point for the standby service water system. This system is discussed in Section 9.2.7 and identifies the uses and quantities of water drawn from the ultimate heat sink.

2.4.12 DISPERSION, DILUTION, AND TRAVEL TIMES OF ACCIDENTAL RELEASES OF LIQUID EFFLUENTS IN SURFACE WATERS

Small amounts of liquid radioactive wastes, processed within the plant and containing traces of radioactive nuclides, are discharged ultimately to the Columbia River via the plant blowdown line as discussed in Section 11.2.2.2.6 (see Figure 2.4-16). *In the vicinity of CGS, the Columbia River is wide, relatively shallow, and fast flowing. Field measurements have shown river velocities near the CGS discharge to be about 3 ft/sec for minimum flows (Reference 2.4-22) and 4.5 ft/sec for average flows (Reference 2.4-23). At the point of discharge the river is about 5 ft deep at minimum flow. Based on a dye dispersion study (Reference 2.4-22), the local eddy diffusivity at low flow has been conservatively estimated to*

be 4 ft^2/sec (Reference 2.4-24). With a combination of minimum river flow and maximum blowdown, it is estimated that an effluent would be diluted by a factor of about 60 at a distance of 300 ft and a factor of 200 at 3000 ft. Dilution factors and travel times for calculating doses to downstream water users are discussed in the CGS Offsite Dose Calculation Manual (ODCM).

Downstream surface water users are listed in Section 2.4.1.2. The travel time to the nearest withdrawal which could be affected by an accidental release is approximately 1 hr. At that point a radioactive release would be essentially completely mixed with the river resulting in a dilution factor of 1:200,000. It is concluded that water users are sufficiently removed from the release point, and the Columbia River is sufficiently dispersive to preclude adverse impacts due to accidental releases. The dispersion characteristics of the river and the effects of routine releases are discussed in Sections 5.1 and 5.2 of the Environmental Report - Operating License Stage.

2.4.13 GROUNDWATER

2.4.13.1 Description and Onsite Use

Subsurface soil conditions, across the site, have been classified as follows:

a. Loose to medium dense, fine to coarse sand with scattered gravel (glaciofluvial sediments).

b. Very dense, sandy gravel with interbedded sandy and silty layers (Ringold Formation, Middle Member).

c. Very dense, interbedded layers of sandy gravel silt and soft sandstone (Ringold Formation, Lower Member).

d. Basalt bedrock which forms the bedrock beneath the area.

The lithologic character and water bearing properties of the geologic units occurring in the Hanford region are summarized in Table 2.4-6. In general, groundwater in the surficial sediments occurs unconfined, although locally confined zones exist. Water in the basalt bedrock occurs mainly under confined conditions. Occasionally, the lower zone of the Ringold Formation occurs as a confined aquifer, separated from the overlying unconfined aquifer by thick clay beds which possess a distinct hydraulic potential.

The unconfined aquifer consists of both glaciofluvial sand and gravel deposits and the Ringold silts, clays, and gravels. Since these materials are very heterogeneous, often greater lithologic differences occur within a given bed than between beds. In the vicinity of CGS the water table is below the top of the Ringold Formation (see Figures 2.5-64 and 2.5-65). The unconfined

aquifer bottom is the basalt bedrock in some areas and silt/clay zones of the Ringold Formation in other areas. Clearly the bottom of the unconfined aquifer is not a continuous lithologic surface.

The Hanford Reservation contains over 2200 wells constructed from pre-Hanford work days to the present). Approximately 600 of these wells are used for groundwater monitoring (Reference 2.4-25). Figure 2.4-17 identifies the well locations in the Hanford Reservation as of September 1975. Figure 2.4-18 shows the December 1975 groundwater contour map. In general, the groundwater gradient resulting from groundwater flowing under the Reservation is the highest in the southwestern area toward Rattlesnake Mountain, and slopes toward the Hanford 200 Areas near the center of the reservation. From the 200 Areas the general slope in the gradient is toward northeast and southeast.

A groundwater contour map based on the potential construction of the Ben Franklin Dam at approximately RM 348 is illustrated by Figure 2.4-19. The CGS design basis groundwater level is based on the possible construction of the Ben Franklin Dam and is taken to be 420 ft msl, whereas the most recent study indicates that the water table would be about 405 ft msl (Reference 2.4-26). The feasibility of constructing Ben Franklin Hydroelectric Dam has been extensively studied. Its proposal was strongly contested by local groups and individuals concerned with environmental protection and preservation. Additionally, the matter of the impact such a facility would have on the DOE Hanford Reservation was believed by some to preclude its construction. Finally, the cost/benefit ratio was believed by many to be too low to make the project viable. The combination of the unresolved impediments to the project has effectively, though not conclusively, relegated it to a very low priority status. Planning studies for the project by the Corps of Engineers were suspended in 1969 and reinitiated in October 1979 as part of the development of a management plan for the Hanford reach. The most recent studies were terminated in November 1981.

Impermeable groundwater boundaries are the Rattlesnake Hills, Yakima Ridge, and Umtanum Ridge on the west and southwest sides of the Hanford Reservation. Gable Mountain and Gable Butte also impede the groundwater flow, as well as other small areas of basalt outcrop above the water table. The Yakima River recharges the unconfined aquifer along its reach from horn Rapids to Richland. The Columbia River forms a hydraulic potential boundary which is a discharge boundary for the aquifer. The major source of natural recharge is precipitation on Rattlesnake Hills, Yakima Ridge, and Umtanum Ridge.

Minor changes would be expected in the groundwater elevations during the summer months because of the charging stage of the Columbia River, which historically reaches peak flood stage in June. Because CGS is located about three miles from the river and because of the permeability characteristics and enormous volume of the Ringold Formation, there is a substantial time lag in changing water levels. For the same reasons, the range in water table fluctuations is very small.

Natural recharge due to precipitation over the lowlands of the Hanford Reservation is not measurable as the evaporation potential during the summer months greatly exceeds total precipitation. Data on migration of moisture from natural precipitation in deep soils (below 30 ft) show movement rates less than 1/2-in./yr at one measurement site (References 2.4-27, 2.4-28 and 2.4-29). The major artificial recharge of ground water to the unconfined aquifer occurs near the Hanford 200 East and 200 West Areas. The large volume of process water (1.35 x 1011 gal) discharged to ground during 1944-1973 has caused the formation of significant groundwater mounds in the water table (Figures 2.4-20 and 2.4-26). Other local groundwater mounds formerly existed along the Columbia River. The present Hanford 100-N Area mound is the only one of these remaining. A minor recharge mound also exists at the Hanford 300 Area.

The unconfined aquifer is characterized by its hydraulic conductivity, the storage coefficient, and the effective porosity. The hydraulic conductivity relates the water flow quantity to the hydraulic potential gradient, while the effective porosity gives the fraction of porous media volume that is available to transmit ground water flow. The storage coefficient relates a change in the water table elevation to a change in the volume of water contained in the aquifer per unit horizontal area. In the limit of no delayed yield, the storage coefficient is equal to the effective porosity of the soil through which the water table moves. These parameters vary widely over the Hanford Reservation.

Qualitatively the hydraulic conductivity, storage coefficient, and effective porosity distributions are a function of the different geologic formations in the unconfined aquifer. Ancestral Columbia River channels which incised in the Ringold Formation are now filled with more permeable glaciofluvial sediments. These channels have been identified extending eastward along the northern and southern flanks of Gable Mountain and extending southeastward from the 200 East Area to the Columbia River (see Figure 2.4-21). These permeable channels are reflected in the groundwater flow pattern of the region.

Quantitative measurements of the hydraulic conductivity of the unconfined aquifer have been made on the Hanford Reservation using a variety of techniques: pumping tests, specific capacity tests, and tracer tests. The most common method has been the pumping tests. Values obtained for the Ringold Formation range between 10 to 650 ft/day with a median of about 130 ft/day. In sharp contrast are the very large hydraulic conductivities of glaciofluvial sediments, ranging from 1,200 to 12,000 ft/day (Reference 2.4-30).

The storage coefficient is much more difficult to measure in the field and estimates are, therefore, less common. For the unconfined aquifer, estimates of the storage coefficient have ranged from 0.01 to 0.1 (Reference 2.4-30). An areal estimate of 0.11 has been provided for the 200 West Area based on the growth of groundwater mounds (References 2.4-30 and 2.4-31). The median specific yield (effective porosity) has been estimated by various researchers at Hanford to range from 4.8% to 11%; most commonly it is assumed to be 10% (Reference 2.4-32).

The unconfined groundwater aquifer is characterized by the contour map of the hydraulic potential or water table. The map for December 1975 appears in Figure 2.4-18. The depth to the water table varies greatly from place to place, depending chiefly on local topography which ranges from less than 1 to more than 300 ft below the land surface. Beneath most of the Hanford 200 Area disposal sites the depth of the water table averages about 250 ft. The current estimate of the maximum saturated thickness of the unconfined aquifer is approximately 230 ft.

The chemical quality of the groundwater in the unconfined aquifer is measured at seven locations. Sodium, calcium, and sulfate ions are measured as well as pH. Chromium and fluoride ions associated with fuel manufacturing operations are analyzed from Hanford 300 Area wells. Nitrate ion, which is a waste product from the manufacturing and chemical separation operations, is monitored over the entire Hanford Reservation. Annual maps of the nitrate ion concentration near the surface of the unconfined aquifer are published (Reference 2.4-33). The map showing nitrate concentration for December 1975 appears in Figure 2.4-22.

The radiological status of the groundwater near the surface of the unconfined aquifer is monitored regularly (Reference 2.4-34) and reported annually. Plots of gross beta (ruthenium) plumes and the tritium plumes are shown in Figures 2.4-23 and 2.4-24 for December 1975 (Reference 2.4-33). Since the nitrate ion is not adsorbed in the soil it can be used as a tracer for groundwater movement. The extent of movement of waste water containing radionuclides can thus be plotted. Respective tritium and nitrate ion concentrations under the CGS site are currently ranging from 30 to 300 pci/ml and 4.5 to 45 mg/l depending on the sampling location. Concentration guide for drinking water is 3,000 pci/ml for tritium and the recommended drinking water standard is 10 mg/l for nitrate ions. Gross beta concentrations do not extend to the site.

From the research that has been done to date, it appears that there are a number of confined aquifers underlying the Hanford Reservation. Relatively impermeable confining beds commonly include the individual basalt flows and the silts and clays of the lower part of the Ringold Formation.

Within the basalt sequence, groundwater is transmitted primarily in the interflow zones, either in sedimentary beds or in the scoria and breccia zones forming the tops and bottoms of the flows (References 2.4-35 and 2.4-36). Basalt flows in the Pasco Basin have been eroded particularly in the anticlinal ridges. In some locations the basalts are highly jointed and contain breccia, pillow and plagonite complexes through which groundwater can move. Consequently, hydraulic potential differences between water bearing zones in the upper part of the basalt sequence are small over hundreds of feet of depth. The lowermost Ringold Formation silts and clays are of variable thickness. Distinct hydraulic potential differences have been observed between aquifers below the silts and clays and the unconfined aquifer.

Groundwater flow in the uppermost confined aquifer is also to the southeast with possible discharge into the Columbia River somewhere below Lake Wallula. However, the flow rates are regarded as quite small due to the low transmissivity range of this water bearing zone. Groundwater in the lower confined aquifers does not appear to cross the major anticlinal divides that define the Pasco Basin.

The piezometric or hydraulic potential map for the confined zones above the basalt (Figure 2.4-25) was based on measurements made in 1970. In general, the hydraulic potential observed in the confined aquifer zones above the basalt is greater than in the overlying unconfined aquifer. The main exception is in the vicinity of the Hanford 200 Area recharge mounds which have raised the potential in the unconfined aquifer.

One recharge area that has been identified is from the Yakima River at Horn Rapids. The piezometric map in Figure 2.4-25 also suggests recharge from the upper Cold Creek Valley with flow toward a potential trough under the Columbia River. The Columbia Basin Irrigation Project to the northeast and east, and the Columbia River behind Priest Rapids and Wanapum Dams to the northwest are other probable recharge sites in both these areas the basalt is exposed and is covered by perennially saturated unconsolidated deposits. A site of possible minor recharge exists adjacent to Gable Butte and Gable Mountain anticline near the center of the Reservation.

Only 90 wells on the Hanford Reservation have been drilled to basalt. Thus data on the confined aquifers in the basalt flows are limited and more would have to be gathered to fully characterize the confined aquifers.

The plant is located on glaciofluvial outwash sands and gravels which are about 50 ft thick. Below this layer occurs very dense gravel. Sandy gravel occurs in a sequence approximately 200 ft thick which is assumed to be the middle member of the Ringold Formation. The lower member of the Ringold Formation consists of a very compact, interbedded gravel, sand, silt, and clay and extends down to a depth of about 500-525 ft. Basaltic bedrock underlies the lower Ringold member, at approximately 550 ft depth.

The water table is about 60 ft below the ground surface level at CGS. The water table elevation is about 378 $\pm$4 ft msl and appears to be stable. The effective bottom of the unconfined aquifer is assumed to be at about 220-260 ft msl at the top of the lower Ringold Formation. Groundwater potentials from the lower Ringold and from the basalt water bearing zones are about 25 ft higher than that of the unconfined aquifer. Test borings down to 925 ft reveal there are water bearing zones in the lower basalt flows and sedimentary interbeds at CGS. Piezometric level in basalt is 10 ft above unconfined water table and hence artesian.

Under the CGS site the unconfined groundwater is moving easterly toward the Columbia River, the nearest discharge boundary. Studies of the uppermost confined aquifer indicate that the

potential gradients at the proposed site are oriented in the same general direct ion as those of the unconfined aquifer.

Three water supply wells are located on the site. Two shallow wells were constructed in the unconfined aquifer (at approximately 240 ft deep) and a third well penetrates a confined aquifer in the underlying basalt flows (at approximately 695 ft deep). Normal water supply is from the river, and the deep well is maintained in the standby mode to provide supplemental makeup water for the potable and demineralized water system as needed. Pumping capability is about 250 gpm. The two shallow wells were used during construction.

2.4.13.2 Sources

Regional use of the unconfined aquifer occurs at two nearby locations. The first is at the DOE's 400 Area located about 3 miles southwest of the CGS site as shown in Figure 2.1-3. *Groundwater to this construction site is supplied from two wells and is used for sanitary and operation purposes. Maximum expected usage rate is between 2 million and 2.5 million gal/month. No data is available on drawdown tests performed on the FFTF water supply wells 699-SO-7 and SO-8.* The second location of ground water use is the WNP-1/4 site about 1 mile east of CGS. Water is drawn from two wells for sanitary and potable water requirements. *Usage rate is approximately 250,000 gal/month.*

The two onsite wells which drew from the unconfined aquifer (699-13-1A and 1B) are 234 and 244 ft deep. Drawdown tests for each well showed 22 and 91 ft of drawdown respectively, at pumping rates of 250 gpm and test durations of about 25 hr. These wells are no longer used. The third well (695 ft deep) is sealed from the unconfined aquifer and draws from confined water in the basalt. Drawdown on this well was 163 ft at a pumping rate of 275 gpm with a test duration of 25 hr.

Water table contours in the vicinity of CGS can be seen in Figure 2.4-26. The aquifer is assumed to be isotropic, therefore, flow occurs along instantaneous streamlines perpendicular to the equipotential contours. The groundwater flow is toward the discharge boundary at the Columbia River to the east of the site. The hydraulic potential gradient in this area is about 8-10 ft/mile in the unconfined aquifer. As described in Section 2.4.13.1, recharge and discharge of riverbank storage occur along the Columbia River with daily fluctuations superimposed on the seasonal variations in river stage. Hydrographs of wells in the vicinity of the plant site (Figure 2.4-27) show that riverbank storage is not detectable even in years of extreme spring runoff at the two wells that are about one mile from the riverbank. Thus no seasonal reversability of the gradients driving the groundwater flow occurs. In other areas of the Hanford Reservation, the seasonal fluctuations of groundwater levels from riverbank recharge can be detected 3-4 miles inland from the riverbank.

During early studies of groundwater in the area (References 2.4-37 and 2.4-31) little information was obtained on specific features at the plant site. The water table for 1944

(pre-Hanford Work conditions) was interpolated using 1948-1952 observation well data (Figure 2.4-20) and showed a water table elevation of about 370 ft msl under the site. The potential gradient was interpolated (References 2.4-31 and 2.4-38) to be about 5-6 ft per mile toward the Columbia River.

The earliest wells in the vicinity (699-2-3 and 17-5) were drilled in 1950. Their hydrographs, presented in Figure 2.4-27, show the gradual rise of the water table to approximately 15 ft above pre-Hanford Operations elevations. The peak rise in 1972 for well 699-2-3 shown on Figure 2.4-27 is believed to be a measurement error. Other wells were drilled in 1958, 1961, 1962 and 1966. Their hydrographs appear in Figure 2.4-27. Wells 669-14-E6-T and -20-E5T also show the gradual rise of the water table at their respective locations. Smaller apparent water table changes at the site between 1944- 1974 (see 2.4.13.1 and Figure 2.4-27, well 699-14-E6-T and 699-20-E5-T) indicated a zone of relatively lower hydraulic conductivity in this area.

Well 699-9-E2 is a deep well perforated in both the unconfined and lower confined aquifer zones. Its historical hydrograph (Figure 2.4-27) reflects a composite of confined and unconfined potentials with discontinuities caused by sanding in an subsequent maintenance operations. The 1962 peak of the hydrograph of well 699-20-E12 (Figure 2.4-27) is due to the influence of the high confined aquifer potential before the installation of piezometer tubes in this deep well. The 1972 peak, could be bank recharge from the high river stage of that year but the lack of previous response to river stage makes the measurement suspicious. Well 699-10-E12, also located within one mile of the river, does not show seasonal bank recharge (Figure 2.4-27). Over the past two years, a decrease in the rate of rise is evident.

Soil test borings and water supply wells drilled in conjunction with the CGS construction site, confirmed the present contouring interpretation of the water table. Recent data from boring at WNP-1 and WNP-4 are not reflected in the water table maps shown in Figures 2.4-18, 2.4-19, 2.4-26, and 2.4-25.

The historical well hydrographs for the uppermost confined aquifer in the vicinity of the plant site are given in Figure 2.4-27. Well number 699-20-E12-P shows a rather rapid rise of the confined aquifer potential in 1962-65. It has been postulated that this rise reflects recharge to the confined zones from irrigation across the river in the Columbia Basin Irrigation Project. The hydraulic potential in the uppermost confined aquifer near the plant site is presently about 390 ft msl, which is about 25 ft higher than the potential of the overlying unconfined aquifer.

The effects of the groundwater withdrawal at the site have been estimated to be local. No drawdown has been detected in the nearest observation wells, numbers 699-17-5 and 699-9-E2. The latter well is perforated over multiple aquifers so it does not give a representative measurement of the water table elevation. The radius of influence (defined to be the radius at which a 0.1 ft drawdown exists) of the CGS wells has been estimated to be about 3500-4500 ft. This is based on the ten months of high rate of withdrawal during compaction

operations taking into account the ambient water table gradient. The subsequent reduction in withdrawal flow rate to 25% of the early value would shrink the radius of influence considerably.

There is no groundwater recharge area within the influence of the plant. The 60-ft depth from the land surface to the water table and the arid condition of sediments above the water table make it virtually impossible to detect any recharge from precipitation over this area.

2.4.13.3 Accidental Effects

An evaluation of a possible radioactive liquid release is postulated due to the rupture of a 700-gal decontamination solution concentrator waste tank within the radwaste building (see Figure 11.2-1). The released effluent was then assumed to reach the soil environment outside the building and to percolate to the water table unimpeded. On entering the groundwater, the postulated radwaste release is dispersed, sorbed, decayed, and diluted along the potential groundwater pathway from the plant towards the Columbia River.

In the unconfined (water table) aquifer, there are no down gradient groundwater users between CGS and the Columbia River. However, the construction water needs at WNP-1/4 are supplied by the two deep wells that withdraw groundwater from the uppermost confined aquifer downgradient from the CGS radwaste building. During operation of WNP-1/4, these wells will be maintained in a standby mode. The uppermost screens in these wells are about 240 ft below the ground surface in the lower Ringold Formation. The effective bottom of the unconfined aquifer is generally assumed to be at the top of the lower Ringold Formation or about 200 ft below the surface. Thus, in all likelihood, any liquid radioactive spill to the groundwater beneath the CGS radwaste building would travel through the unconfined aquifer towards the Columbia River. However, for conservatism, analyses of postulated radionuclide movement assume that the WNP-1/4 wells draw from the unconfined aquifer. The remainder of this subsection provides estimates of travel times of critical radionuclides to move from the postulated spill to receptors and the corresponding concentration reduction factors.

For an assumed one-dimensional groundwater movement, the groundwater travel time, t, is the path length, L, divided by the groundwater velocity (seepage velocity), u. The groundwater velocity is the Darcy (apparent) velocity divided by the effective porosity, $u = Ki/n_e$, where K is the lateral permeability (hydraulic conductivity) of the aquifer, i is the hydraulic gradient, and ne is the effective porosity of the aquifer material.

For computational purposes, a conservative value for lateral permeability of 500 ft/day was selected to represent the unconfined aquifer located in the Ringold Formation beneath CGS (see Figure 2.4-21). From 2.4.13.1, effective porosity is taken 0.10. From Figure 2.4-26, the gradient in the water table aquifer between the plant and the Columbia River is about 8 or 9 ft/mile, and is taken conservatively as 10 ft/mile.

Using the above parameter values, groundwater velocities were computed to be 10 ft/day. With path lengths of 3.4 miles to the river and 1.0 mile to the WNP-1/4 wells, the respective travel times are estimated to be 5.2 years and 1.5 years.

Generally, the critical radionuclides of concern for a postulated liquid radwaste spill are ^{3}H, ^{90}Sr, and ^{137}Cs. These three radionuclides are fairly representative in terms of sorption characteristics, of those found in liquid radwaste tanks, since tritium does not sorb onto soil particles at all, strontium is an intermediate sorber, and cesium strongly sorbs to soil particles. The half-life of tritium is 12.3 years, whereas those of ^{90}Sr and ^{137}Cs are 29.0 and 30.1 years, respectively.

The travel time, t_i, for a particular radionuclide moving through groundwater depends upon the velocity, u_i, of the radionuclide

$$t_i = l/u_i$$

where the radionuclide velocity is

$$u_i = r_f u$$

in which r_f is the velocity reduction factor attributable to sorption

$$r_f = 1/1+\frac{\rho b}{n} k_d$$

In this equation, ρb is the bulk density of the aquifer material, n is the total porosity, and K_d is the equilibrium distribution coefficient for a particular radionuclide. The bulk density and total porosity are further related physically as

$$b = R_s (1 - n)$$

where R_s is the real specific gravity or particle density of the solid particles in the aquifer media.

The particle density, R_s, for Hanford soils is usually taken to be constant at 2.65 gm/cm^3, (Reference 2.4-39). The bulk density ρb, of Hanford soils has been determined to range from about 1.5 gm/cm^3 to about 1.75 gm/cm^3, with a median value of about 1.65 gm/cm^3, (Reference 2.4-40). For the median value of bulk density, the corresponding total porosity is about 0.377.

Using the above value for bulk density and total porosity, radionuclide travel time, ti, through the groundwater beneath WNP-1/4 can be expressed as

$$t_i = (1 + 4.4\,K_d)\,t$$

The following summarizes radionuclide travel times (in years) to the WNP-1/4 wells (1.0 miles) and to the Columbia River (3.4 miles):

Nuclide	*Half-life, years*	K_d	t_i *@ 1.0 miles*	t_i *@ 3.4 miles*
^{3}H	12.3	0	1.5	5.2
^{90}Sr	29.0	10	67.0	230.0
^{137}Cs	30.1	100	660.0	2300.0

The radionuclide concentration at the point of water use will be determined by the amount of decay, dispersion, and sorption on the aquifer media. The minimum concentration reduction factor, CRF_{min}, along the centerline of the contaminant plume from an instantaneous point source is given by (Reference 2.4-41)

$$CRF_{min} = \frac{C_o}{C} = \frac{(4\pi t)^{3/2}\ (K_x K_y K_z)^{1/2}}{2V}$$

for an effluent volume, V, with a specific gravity of 1.0 and an initial concentration, C_o, released to soil with dispersion coefficients, K_x, K_y, K_z, in the x, y, and z directions, respectively. This expression neglects the phenomena of sorption and decay which will be considered later.

It is generally accepted that the dispersion coefficients are proportional to groundwater velocity for unidirectional flow, i.e.,

$$K_{x,y,z} = \alpha_{x,y,z} u$$

where $\propto_{x,y,z}$, are constants called dispersivities which are a function of the nonhomogeneity of the material. The range in dispersivities in homogeneous granular aquifers may approach 1000 cm (33 ft) (Reference 2.4-42). Substituting this relationship into the above expression for concentration reduction, and noting that travel time is determined by path length and velocity, results in

$$CRF_{min} = \frac{(4\pi L)^{3/2}\ (\propto_x \propto_y \propto_z)^{1/2}}{2V}$$

For the conservative condition of $\alpha_x = \alpha_y = \alpha_z = 1.0$, then

$$CRF_{min} = \frac{(4\pi L)^{3/2}}{2V}$$

The concentration reduction factors at the WNP-1/4 wells and at the bank of the Columbia River, due only to dispersion, are 9.1 x 10^4 and 5.7 x 10^5, respectively, for the 700-gal concentrated waste tank. When sorption and decay are included, the concentration reduction is given by (Reference 2.4-42)

$$CRF = \frac{(4\pi L)3 / 2 (\propto_x \propto_y \propto_z)^{1/2}}{2V} e^{\lambda t_i}$$

in which λ is the radionuclide decay constant defined in terms of the half-life, T1/2, of a particular radionuclide as

$$\lambda = \frac{1n\ 2}{T_{1/2}}$$

The concentration reduction factor can be expressed as

$$CRF = CRF_{min} (e\ \lambda\ t_i)$$

The exponential term accounts for the effects of sorption and decay. The only effect of sorption on concentration reduction is to increase the travel time, thus allowing more time for decay. Concentration reduction factors (CRF) for the radionuclides listed were calculated for path lengths of 1.0 mile (to WNP-1/4 wells) and 3.4 miles (to Columbia River):

Nuclide	CRF (1.0 mile)	CRF (3.4 mile)
^{3}H	1.0 x 10^5	7.7 x 10^5
^{90}Sr	4.5 x 10^5	1.8 x 10^8
^{137}Cs	3.7 x 10^{11}	5.8 x 19^{28}

The above factors, derived through the application of conservative parameters, are used in Section 15.7.3 to evaluate concentrations offsite. *The consideration of the WNP-1/4 wells is especially conservative. Groundwater contamination from the 200 Areas which reached CGS over six years ago (see Section 2.4.13.1) has not been detected at WNP-1/4. This substantiates that the WNP-1/4 wells do not draw from the unconfined aquifer or, alternatively, the hydraulic conductivities are much less than assumed.*

It should also be noted that if Ben Franklin Dam were ever constructed, the concentration reduction factors at the river bank would be even larger than those noted above. This would be true, because the groundwater gradient (thus, the groundwater velocity) would be decreased as shown in Figure 2.4-19.

2.4.13.4 Monitoring or Safeguard Requirements

Plant water systems result in releases to the ground at a number of locations. Sanitary wastewater is routed to a central treatment system comprised of lined aeration lagoons and stabilization ponds. This treatment plant also receives wastes from the Plant Support Facility, WNP-1 and WNP-4, and the DOE's 400 Area. Periodically the treated effluent is discharged to percolation beds.

As discussed in Section 2.4.2.3, the storm water drainage system discharges to lined ponds northeast of the plant (see additional description in Section 9.3.3.2.3.1). Such sources as water treatment filter backwashes, heating, ventilating, and air conditioning (HVAC) air wash units, and some building sumps and floor drains (see Section 9.3.3.2.3) also contribute to flow in the storm water system. Periodic testing and flushing of the fire protection system and cleaning of the cooling towers and standby service water ponds result in localized discharges of water to the ground.

Monitoring of groundwater and plant-related discharges to ground is performed as described in the ODCM.

2.4.13.5 Design Bases for Subsurface Hydrostatic Loadings

CGS does not employ permanent dewatering systems. Site groundwater conditions are presented in Section 2.5.4.6 and the design bases for subsurface hydrostatic loadings are given in Section 3.4.

The design-basis groundwater elevation used for subsurface hydrostatic loadings is 420 ft msl and was predicated on the possible future construction of Ben Franklin Dam at RM 348. As noted in Section 2.4.13.1, planning for the dam has been terminated. The same section notes that the water table beneath CGS would rise to less than 405 ft msl if the dam were to be completed. The actual water table beneath the project is about 385 ft msl (see Sections 2.4.13.1 and 2.5.4.6). The design-basis groundwater level is adequate to account for seepage from the ultimate heat sink spray ponds or the rupture of any Seismic Category I or nonseismic pipe. As discussed in Section 3.8.4.1.5, the two, 250-ft^2 reinforced-concrete spray ponds are designed to Seismic Category I requirements and are designed to mitigate any possible water leakage. The bottom of the spray ponds are at 417 ft msl and the ponds are designed for external hydrostatic loading to 420 ft msl. The maximum combined leakage from the two ponds during the initial filling sequences was 120 gpm. It may be inferred from previous studies (Reference 2.4-7) that continued leakage cannot affect the groundwater level

beneath the ponds or other safety-related structures, the closest of which (500+ ft away) is the diesel generator building with a foundation at 434 ft msl. These early CGS hydrologic studies evaluated the effect of cooling pond leakage and cooling tower blowdown at the project site. Equivalent leakage/discharge rates used in these studies were very much greater than leakage from the spray ponds. For example, the continuous discharge of 2700 gpm of cooling tower blowdown to the depression just east of CGS was estimated to raise the water table about 20 ft beneath the point of discharge (Reference 2.4-7). Based on these previous studies, it can be concluded that the minimal amount of spray pond leakage will have no influence on the design-basis groundwater elevation of 420 ft msl.

With respect to a pipe break, the 144-in. circulating water system pipe on the discharge side of the condenser would produce the maximum release of water. The maximum quantity of water released from such a rupture is 199,180 ft^3. This discharge would have a negligible (less than 1 in.) and temporary effect on the groundwater level. Failure of the pipe at its closest proximity to a safety-related building may result in temporary saturation of the backfill. This material has been recompacted to a minimum relative density of 75% and an average relative density of 85%. As discussed in Section 2.5.4.8, these densities are not susceptible to liquefaction for motions associated with the safe shutdown earthquake, and as discussed in Section 2.5.4.10, temporary saturation would not significantly reduce the bearing capacity of the densely compacted backfill. A continuous but undetected leak from any major pipe would not influence the groundwater level enough to affect plant structures. This may be deduced from the time factors and water table rises predicted from a number of scenarios in the above mentioned hydrologic studies (Reference 2.4-7).

2.4.14 TECHNICAL SPECIFICATIONS AND EMERGENCY OPERATION REQUIREMENTS

The worst hydrological condition, as discussed in this section, is a flood caused by a postulated PMP event. This flood does not create an adverse hydrological condition on safety-related equipment. Emergency flood protection procedures are therefore unnecessary.

2.4.15 REFERENCES

2.4-1 Woods, V. W., "A Summary of Columbia River Hydrographic Information Pertinent to Hanford Works - 1894 to 1954," HW-30347, February 24, 1954.

2.4-2 Memorandum Report Columbia River Basin Lower Columbia River Standard Project Flood and Probable Maximum Flood, U.S. Army Engineers, North Pacific Division, Portland, OR, September 1969.

2.4-3 "Probable Maximum Precipitation," Hydrometeorological Report No. 43, U.S. Weather Bureau (now NOAA), Northwest States, 1966.

2.4-4 Corps of Engineers, North Pacific Division, letter to V. C. St. Clair, Atomic Energy Commission, Richland Office, November 2, 1970.

2.4-5 Corps of Engineers, North Pacific Division, letter to M. J. Hroncich, Burns and Roe Inc., February 7, 1972.

2.4-6 Corps of Engineers, North Pacific Division, letter to M. J. Hroncich, Burns and Roe Inc., February 14, 1972.

2.4-7 Final Report on Hydrology Studies of the WNP-2 Site, July 1971, and Addendum I to Final Report on Hydrology Studies of the WNP-2 Site, by Battelle Northwest, Richland, WA, to Burns and Roe Inc., July 1971.

2.4-8 Design of Small Dams, U.S. Bureau of Reclamation, 1977.

2.4-9 "Water Surface Profiles," Vol. 6 Hydrologic Engineering Methods for Water Resources Development, U.S. Army Corps of Engineers, Hydrologic Engineering Center, July 1975.

2.4-10 Shore Protection Manual, U.S. Army Corps of Engineers, Coastal Engineering Research Center, 1975.

2.4-11 "Wave Runup and Wind Setup on Reservoir Embankments," Engineering Technical Letter No. 1110-2-221, Department of the Army, Corps of Engineers, November 29, 1976.

2.4-12 Artificial Flood Possibilities on the Columbia River, Corps of Engineers, Washington District, Washington, DC, November 20, 1951.

2.4-13 Rockwood, D. M, letter to R. Chitwood, "Preliminary Estimate of Upstream Dam Failure Effects," June 21, 1972.

2.4-14 Arthur, H. G., letter to J. J. Stein, "Behavior of Grand Coulee Dam and Forebay Dam When Subjected to Overtopping," August 1, 1972.

2.4-15 Artificial Flood Considerations for Columbia River Dams, Corps of Engineers, U.S. Army Engineer District, Seattle, WA, August 1963.

2.4-16 Eugene Isaacson, Calculations of Severe Floods in a Developed River, January 1965.

2.4-17 Artificial Flood Considerations for Columbia River Below Chief Joseph Dam to Richland, Washington, U.S. Army, Corps of Engineers North Pacific Division, Portland, OR, January 1968.

2.4-18 Safety Evaluation by the Division of Reactor Licensing, U.S. Atomic Energy Commission in the matter of Portland General Electric Company, Pacific Power and Light Company, City of Eugene, OR, Trojan Nuclear Plant, Docket No. 50-344, pp. 11-12.

2.4-19 Jaske, R. T., and Synoground, M. O., "Effect of Hanford Plant Operation on the Temperature of the Columbia River, 1964-Present," BNWL-1345, Battelle, Pacific Northwest Laboratories, Richland, WA, November 1970.

2.4-20 "Columbia North Pacific Region Water Resources Appendix V," Volume 1, March 1969.

2.4-21 Columbia River Instream Resource Protection Program, Department of Ecology, Olympia, WA, June 1980, pp. 61-67.

2.4-22 Vertical Mixing Characteristics of the Columbia River at RM 351.75, WNP No. 2, Battelle Pacific Laboratories, Richland, WA, March 16, 1972.

2.4-23 Preoperational Environmental Monitoring Studies Near WNP-1, 2, and 4 August 1978 Through March 1980, WPPSS Columbia River Ecology Studies Vol. 7, Beack Consultants, Inc., Portland, OR, June 1980.

2.4-24 Kannberg, L. D., Mathematical Modeling of the WNP-1/2/4 Cooling Tower Blowdown Plumes, Battelle Pacific Northwest Laboratories, Richland, WA, March 1980.

2.4-25 McGhan, V. L., and Damschen, D. W., Hanford Wells, PNL-2894, Battelle Pacific Northwest Laboratories, Richland, WA, May 1979.

2.4-26 Harty, Harold, "The Effects of Ben Franklin Dam on the Hanford Site," PNL-2821, Battelle, Pacific Northwest Laboratories, Richland, WA, April 1979.

2.4-27 Bierschenk, W. H., "Aquifer Characteristics and Ground Water Movement at Hanford," HW-60601, June 9, 1959.

2.4-28 Bierschenk, W. H., "Hydraulic Characteristics of Hanford Aquifers," HW-48916, March 3, 1957.

2.4-29 Honstead, J. F., McConiga, M. W., and Raymond, J. R., "Gable Mountain Ground Water Tests," HW-34532, January 21, 1955.

2.4-30 Gephart, R. E., Spane, F. A., Leonhart, L. S., Palombo, D. A., Strait, S. R., "Pasco Basin Hydrology", Hydrologic Studies within the Columbia Plateau, Washington - An Integration of Current Knowledge, (RNO-BWI-ST-5), by Rockwell Hanford Operations, Richland, WA, October 1979.

2.4-31 Newcomb, R. C., Strand, J. R. and Frank, F. J., "Geology and Ground Water Characteristics of the Hanford Reservation of the U.S. Atomic Energy Commission," Professional Paper # 717, USGS., Washington, 1972.

2.4-32 Cole, C. R., and Reisenauer, A. E., "Variable Thickness Transient Model Assumptions and Boundary Conditions," Battelle Pacific Northwest Laboratories, Richland, WA, August 1974.

2.4-33 Environmental Monitoring Report on the Status of Groundwater Beneath the Hanford Site, January- December 1975, BNWL-2034, Battelle, Pacific Northwest Laboratories, Richland, WA, January 1977.

2.4-34 Bramson, O. P. E., and Corley, J. P., "Hanford Environmental Surveillance Routine Program," Master Schedule -CY 1973, BNWL-B-234, Battelle, Pacific Northwest Laboratories, Richland, WA, December 1972.

2.4-35 Newcomb, R. C., "Some Preliminary Notes on Ground Water in the Columbia Basalt," Northwest Sciences, Vol. 33, 1, 1959, pp. 1-18.

2.4-36 LaSala, A. M., Jr., Doty, G. C., and Pearson, F. S., "A Preliminary Evaluation of Regional Ground Water Flow in South-Central Washington," USGS Open File Report, January 1973.

2.4-37 Parker, G. G., and Piper, A. M., "Geologic and Hydrologic Features of the Richland Area, WA, Relevant to Disposal of Waste at the Hanford -Directed Operations of the Atomic Energy Commission," Interior Report 1, USGS Report to Atomic Energy Commission, 101 pages, 5 Illus., 1949.

2.4-38 Kipp, K. L., and Mudd, R. D., "Selected Water Table Contour Maps for the Well Hydrographs and Hanford Reservation, 1944-1973," BNWL-1797, Battelle, Pacific Northwest Laboratories, Richland, WA.

2.4-39 Serne, R. J., Routson, R. C., and Cochran, D. A., "Experimental Methods for Obtaining PERCOL Model Input and Verification Data," BNWL-1721, Battelle Pacific Northwest Laboratories, Richland, WA, 1973, p. 24.

2.4-40 Rouston, R. C., and Serne, R. J., "Experimental Support Studies for the PERCOL and Transport Models," BNWL-1719, Battelle Pacific Northwest Laboratories, Richland, WA, 1972, pp. 37, B-1, and B-2.

2.4-41 Carslaw, H. S., and Jaeger, J. C., Conduction of Heat in Solids, Oxford University Press, London, England, 1959.

2.4-42 Codell, R. B., and Schreiher, D. L., "NRC Models for Evaluating the Transport of Radionuclides in Groundwater," Proceedings of the Symposium on Management of Low Level Radioactive Waste, Pergamon Press, 1979, pp. 1193-1212.

Table 2.4-1

Major Columbia River Basin Dams

Location	Dams	River	River Miles from Site	Usable Storage 10^3 ac-ft
Upstream	Mica	Columbia (Can)	666	12,000
	Duncan	Duncan		1,400
	Arrow	Columbia (Can)	429	7,090
	Libby	Kootenai	642	5,000
	Hungry Horse	South Fork Flathead		3,160
	Kerr	Clark Fork		1,219
	Albeni Falls	Pend Oreille	483	1,153
	Grand Coulee	Columbia	245	5,200
	Chief Joseph	Columbia	193	--
	Wells	Columbia	164	117
	Chelan	Chelan	152	677
	Rocky Reach	Columbia	122	120
	Rock Island	Columbia	101	--
	Wanapum	Columbia	64	389[a]
	Priest Rapids	Columbia	45	170[a]
Downstream	McNary	Columbia	60	
	John Day	Columbia	136	
	The Dalles	Columbia	160	
	Bonneville	Columbia	206	

[a] Storage not available for flood regulation.

Table 2.4-2

Columbia River Temperatures Near Columbia Generating Station

MONTHLY AVERAGE WATER TEMPERATURE,
IN °C, AT RICHLAND, WA

Year	Jan	Feb	Mar	Apr	May	Jun	Jul	Aug	Sep	Oct	Nov	Dec	Annual Average
1965	6.1	5.4	6.3	9.1	11.0	14.2	17.3	19.8	18.5	16.4	12.6	8.4	12.1
1966	6.9	6.2	6.8	10.3	12.1	13.5	16.2	18.8	19.4	15.6	12.6	9.5	12.2
1967	7.4	7.0	6.6	8.8	12.0	13.9	17.0	20.2	19.4	16.1	12.0	7.8	12.4
1968	5.7	5.0	6.0	8.8	12.8	14.3	17.0	18.7	18.3	15.0	11.4	7.4	11.7
1969	2.7	1.9	4.3	8.0	11.4	15.3	17.9	19.3	18.6	15.2	11.7	7.0	11.1
1970	5.3	4.9	5.7	7.9	11.7	15.4	19.0	19.9	17.5	14.9	10.6	5.9	11.6
1971	4.2	3.4	3.8	7.0	11.1	12.9	16.4	19.5	17.8	15.0	10.7	6.2	10.7
1972	3.3	2.2	3.7	7.0	11.0	13.3	15.5	18.1	16.9	14.0	10.5	6.1	10.1
1973	3.2	3.0	4.7	7.8	12.9	15.6	18.3	19.6	18.3	15.0	9.9	7.6	11.3
1974	3.2	3.2	5.2	8.2	11.3	13.7	17.4	19.4	18.8	15.4	11.5	7.9	11.3
Average 1965-1974	4.7	4.2	5.3	8.3	11.7	14.2	17.2	19.3	18.4	15.3	11.4	7.4	11.4
Minimum Daily	0.2	0.7	2.4	5.1	8.6	11.2	14.2	17.3	14.6	11.1	7.7	2.4	--
Maximum Daily	8.3	8.3	8.6	12.8	15.0	17.7	20.4	21.5	21.1	18.5	15.9	11.3	--

Records since June 1964.

MONTHLY AVERAGE WATER TEMPERATURE,
IN °C, AT PRIEST RAPIDS DAM, WA

1961	5.4	4.7	4.7	7.4	10.4	13.7	17.3	18.9	17.8	14.9	10.4	6.6	11.0
1962	4.1	3.6	3.6	6.5	10.0	13.7	16.1	17.4	17.1	14.8	11.9	8.9	10.6
1963	5.3	3.8	4.6	6.5	10.4	14.0	16.6	18.4	18.3	16.3	11.9	7.7	11.2
1964	5.5	4.6	4.7	7.2	9.7	12.8	15.3	17.1	16.3	14.6	10.8	6.3	10.4
1965	4.4	3.3	4.1	6.6	10.0	13.3	16.1	18.4	17.3	15.3	11.9	7.8	10.7
1966	4.8	4.1	4.5	7.8	10.6	12.4	15.3	17.5	17.5	14.6	11.6	8.4	10.8
1967	5.9	5.7	5.0	6.8	10.1	13.3	16.1	18.5	18.2	15.4	11.3	7.2	11.1
1968	4.6	3.3	4.6	7.1	11.1	13.4	16.1	17.5	17.2	14.2	10.9	6.8	10.6
1969	2.4	1.5	3.4	7.2	10.8	14.6	17.1	18.2	17.7	14.8	11.5	7.6	10.6
1970	4.3	4.1	4.8	6.8	10.9	14.8	18.0	19.2	17.5	15.2	10.6	6.2	11.0
1971	4.0	3.5	3.6	6.6	10.7	12.6	15.3	18.4	17.2	15.2	11.3	6.8	10.4
1972	3.6	1.9	4.0	7.2	10.6	12.9	15.2	17.3	16.8	15.4	11.3	7.3	10.3
1973	2.3	2.9	4.8	7.7	12.5	15.4	17.6	18.8	17.8	15.2	10.3	7.7	11.1
1974	4.0	3.0	4.9	7.7	10.8	13.6	17.2	18.7	18.4	15.5	11.8	8.6	11.2
Average 1965-1974	4.0	3.3	4.4	7.2	10.8	13.6	16.4	18.3	17.6	15.1	11.3	7.4	10.8
Minimum Daily	0.3	0.3	2.2	4.3	7.5	10.6	13.1	16.6	15.3	12.2	7.7	2.3	--
Maximum Daily	7.6	6.2	6.9	10.1	14.6	17.1	19.3	20.2	20.0	18.7	14.4	10.5	--

Records since August 1960. Recorded values adjusted by computer-simulation to compensate for measurement errors and missing data.

Table 2.4-3

Downstream Surface Water Users

Name	Location of Diversion Township	Range	Section	Approximate Miles Downstream	Quantity (cfs)	Type Use[a]
Energy Northwest	11	28	2	--	90	IN
Peter Kewit and Sons	11	28	2	--	1	I
L. L. Bailey	11	28	24	4	2	I
H. D. Loyd	11	28	24	4	0.99	D,I
Central Premix Concrete Company	11	28	27	4	2	IN
Battelle Memorial Institute	10	28	14	8	4.4	I
University of Washington	10	28	23	9	1.75	I
City of Richland	10	28	24	9	0.67	D
City of Richland	10	28	25	12	31	D
City of Richland	10	28	25	12	23.25	D
City of Richland	10	28	25	12	31	D
City of Richland	10	28	35	12	93	D
E. C. Watts	9	28	1	13	0.31	D,I
H. S. Petty	9	28	1	13	0.48	I
N. H. and M. E. Ketchersid	9	28	1	13	1.66	I
G. C. Walkley	9	28	1	13	2.32	I
R. T. Justesen, et al.	9	28	12	15	2.54	I
Central Premix Concrete Company	9	28	12	15	1.10	IN
City of Richland	9	28	13	17	2.0	I
Benton County	9	29	28	19	1.0	I
City of Kennewick	9	30	31	23	55.7	D
City of Pasco	9	30	31	23	35.0	D
F. J. Henckel	8	30	14	27	0.015	I
Allied Chemical	8	30	14	27	3.55	IN
Chevron Chemical	8	30	23	28	3.77	IN
Chevron Chemical	8	30	23	28	40	IN
Phillips Pacific Chemical Company	8	30	24	28	82	IN
Phillips Pacific Chemical Company	8	30	24	28	20	IN
Boise Cascade Corporation	7	31	10	34	24.5	IN
L. D. Hoyte, et al.	7	31	14	35	179.8	I
D. Howe	7	31	23	36	6.4	I
Crawford and Sons	6	30	27	47	32.8	I
Barbarosa Farms	6	30	27	47	20	I
Crawford and Sons	6	30	27	47	7.6	I
Rainier National Bank	6	30	27	47	9.4	I
Anderson and Coffin	5	29	5	49	242	I
Horse Heaven Farms	5	29	6	50	82	I
Horse Heaven Farms	5	29	6	50	550	I
Horse Heaven Farms	5	29	6	50	290	I
Anderson and Coffin	5	29	6	50	242	I

[a] D - Domestic or municipal uses
I - Irrigation and other agricultural uses
IN - Industrial
Includes only those water rights for which a permit or certificate has been issued

Table 2.4-4

Mean Discharges in CFS of
Columbia River Below Priest Rapids Dam,
Modified to 1970 Conditions

Water Year	Oct.	Nov.	Dec.	Jan.	Feb.	Mar.	Apr.	May	June	July	Aug.	Sept.	Annual
1928										224000	109900	90900	
1929	82300	78400	101100	103000	108000	72600	85200	62000	71300	87600	97000	94300	86900
1930	87900	89800	102700	93500	90700	83100	72500	81700	90200	98800	97600	92700	90100
1931	86800	89600	100000	82200	90800	88400	74500	81700	104000	102200	99400	85800	90400
1932	87400	88700	102000	95000	109200	77800	90700	157500	156700	74600	97800	90600	102300
1933	89600	69700	102700	128800	167100	97900	118900	185900	196600	180300	121900	100200	130000
1934	100600	104200	128000	139600	203400	196700	243100	221200	168800	104500	100000	101000	150900
1935	82000	72400	109200	132100	132000	111300	117600	147500	156900	131100	99300	96900	115700
1936	90200	86200	107900	119400	79800	80400	81500	160500	123300	83400	93200	89400	99600
1937	87600	87500	105400	96600	100600	84400	63500	70400	76900	87800	102500	91500	87900
1938	89300	83100	88700	111000	124100	86800	110700	142400	146800	154100	90400	89200	109700
1939	83400	77100	91700	127200	90400	83000	108500	100000	112400	95500	96900	90800	96400
1940	85800	85400	90500	133200	98000	89200	110700	89700	101700	94100	96000	91600	97200
1941	84300	79600	92500	99400	92200	87900	137400	76900	73200	84000	91500	88700	90600
1942	96000	82700	91400	114100	119000	84600	115900	105300	148400	101400	102000	88300	104100
1943	87900	65800	86800	105600	150600	116000	132400	202600	134300	147700	101300	88900	118300
1944	81300	77200	96800	99300	110600	78700	88200	88000	69100	81200	94600	84400	87400
1945	90100	90900	103600	88500	94000	86500	77800	112800	67800	88800	99300	87400	90600
1946	86200	85700	92500	95600	117700	90800	112200	178100	170900	134500	94400	91100	112500
1947	79600	81300	93100	116000	137800	135200	155900	184400	163400	136300	89900	85500	121500
1948	94700	96000	113900	113200	202800	166700	137700	193400	257600	194700	122900	101900	149600
1949	88000	83600	97700	126000	114000	80000	123000	166400	181600	82700	92200	87800	110200
1950	79000	69500	106800	123300	155200	145400	136400	197500	200200	211900	114800	96200	136400
1951	91800	87900	102600	115400	223400	186200	195600	188800	171300	174300	110300	91700	144900
1952	94200	98800	112200	126500	155200	113300	134600	172400	135800	145100	88700	85900	121900
1953	85500	83900	103900	95500	124800	87800	98700	174000	168300	141400	99000	89200	112700
1954	83600	89800	110300	122100	153600	135200	124200	191200	224900	228400	163600	114400	145100
1955	98700	103400	126600	132400	143900	102700	110500	104300	181800	193300	111900	91000	125000
1956	95700	94500	97000	108100	206500	200600	173500	245800	212600	200400	103600	90700	152400
1957	87400	82900	109400	132100	145100	101200	113600	182700	176500	120900	89000	86900	119000
1958	77500	75200	83300	120200	123700	107300	125000	172800	172900				
Mean	87800	84700	101700	113200	132100	108600	119000	147900	147200	132800	102400	91800	114100

Table 2.4-5

Dependable Yield, Columbia River Below
Priest Rapids Dam, Washington

Consecutive Years of Lowest Mean Flow	Inclusive Years	Lowest Mean Flow (cfs)	Percent of 1929-1958 Mean
1	1937	86,600	75.9
2	1930-31	89,900	78.8
3	1929-31	92,900	81.4
4	1929-32	95,800	84.0
5	1937-41	96,400	84.5
6	1937-42	97,300	85.3
7	1936-42	98,400	86.2
8	1937-44	99,000	86.8
9	1937-45	97,900	85.8
10	1936-45	98,600	86.4
11	1929-58	114,100	100.0

Table 2.4-6

Major Geologic Units in the Hanford Region
and Their Water-Bearing Properties

System	Series	Geologic Unit	Material	Water-Bearing Properties
		Fluviatile and glaciofluviatile sediments and the Touchet formation (0-200 ft thick)	Sands and gravels occurring chiefly as glacial outwash. Unconsolidated, tending toward coarseness and angularity of grains, essentially free of fines.	Where below the water table, such deposits have very high permeability and are capable of storing vast amounts of water. Highest permeability value determined was 12,000 ft/day.
	Pleistocene	Palouse soil	Wind deposited silt.	Occurs everywhere above the water table.
Quaternary		Ringold formation (200-1200 ft thick)	Well-bedded lacustrine silts and sands and local beds of clay and gravel. Poorly sorted, locally semi-consolidated or cemented. Generally divided into the lower "blue clay" portion which contains considerable sand and gravel, the middle conglomerate portion, and the upper silts and fine sand portion.	Has relatively low permeability; values range from 1 to 200 ft/day. Storage capacity correspondingly low. In very minor part, a few beds of gravel and sand are sufficiently clean that permeability is moderately large; on the other hand, some beds of silty clay or clay are essentially impermeable.
	Miocene and Pliocene	Columbia River basalt series (10,000 ft thick)	Basaltic lavas with interbedded sedimentary rocks, considerably deformed. Underlie the unconsolidated sediments.	Rocks are generally dense except for numerous shrink-age cracks, interflow scoria zones, and interbedded sediments. Permeability of rocks is small (e.g., 0.002 to 9 ft/day) but transmissivity of a thick section may be considerable (70 to 700 ft^2/day)

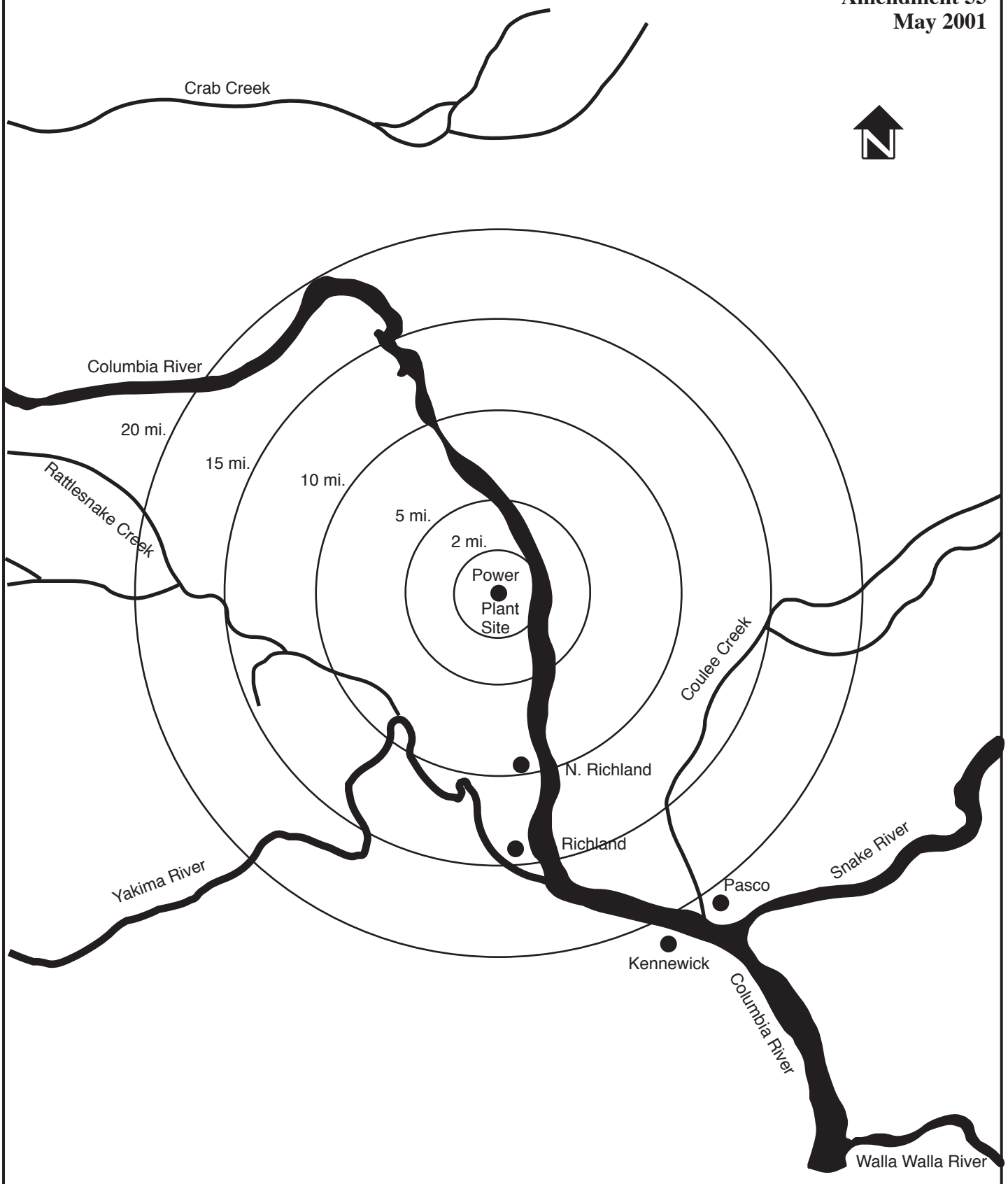

Columbia Generating Station
Final Safety Analysis Report

Hydrographic Map

Draw. No.	Rev.	Figure
990306.30		2.4-1

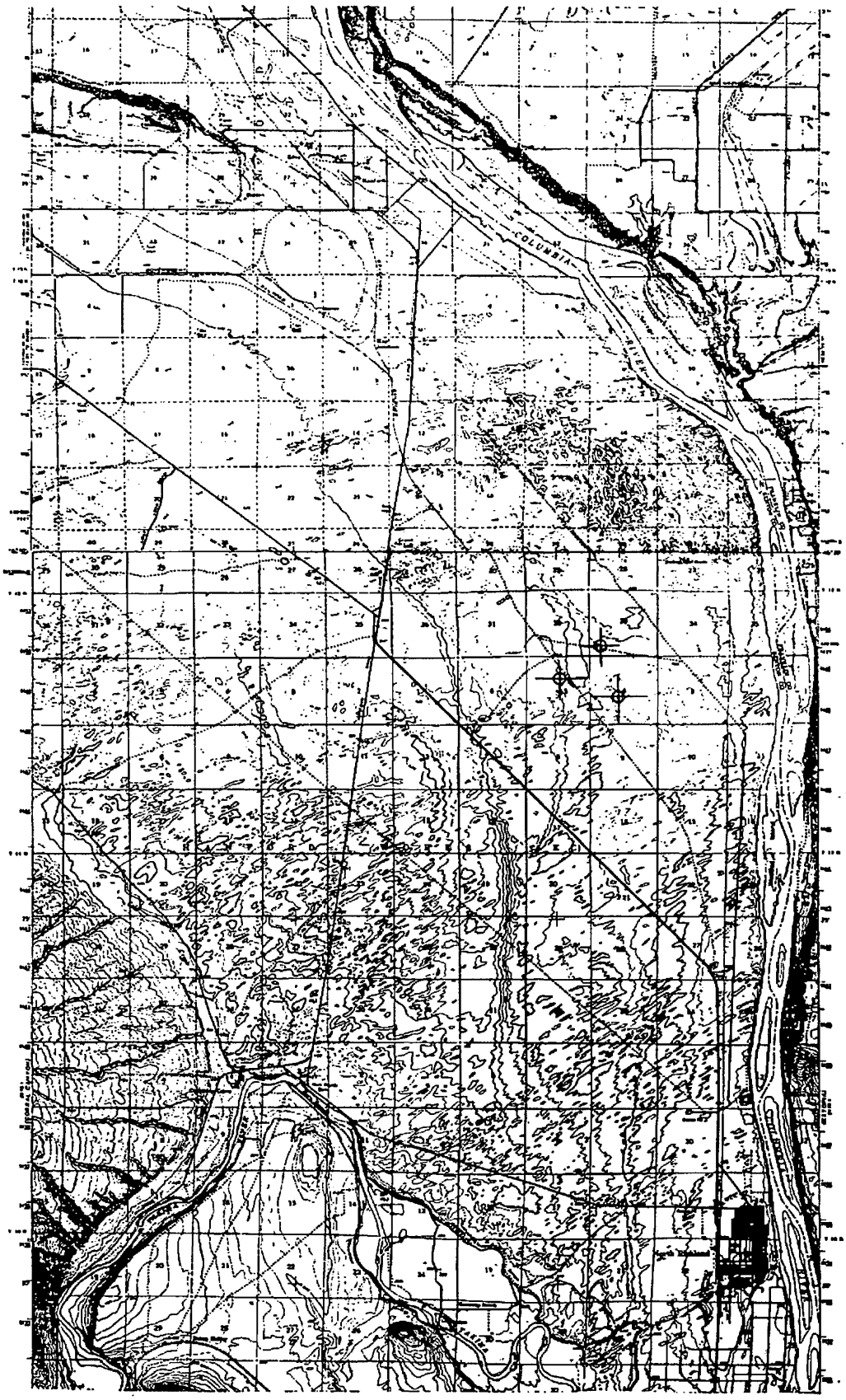

Columbia Generating Station
Final Safety Analysis Report

Topographic Map of Site and Sounding Area

Draw. No. 020361.02	Rev.	Figure 2.4-2

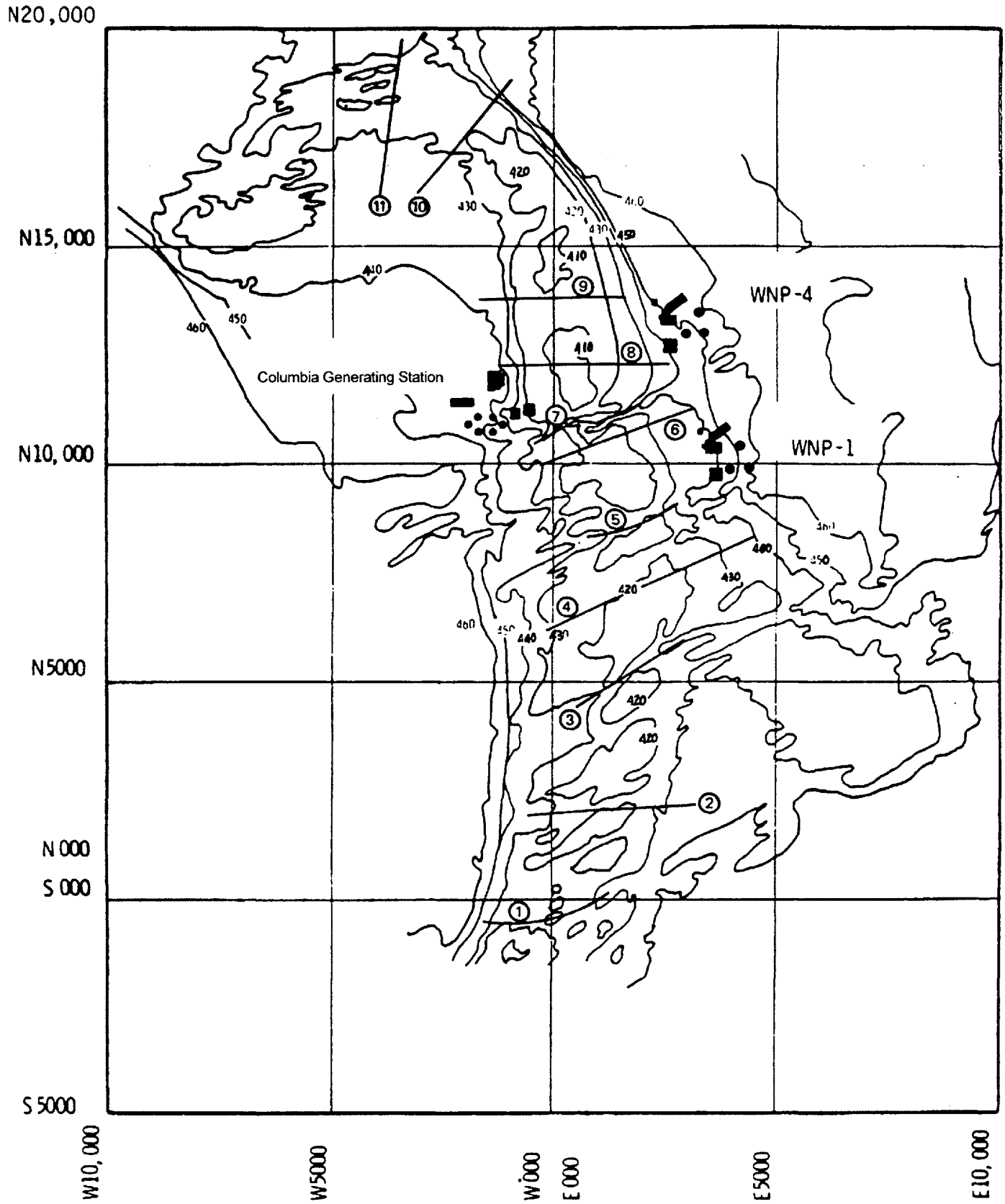

Columbia Generating Station
Final Safety Analysis Report

Detailed Countours Near the Site

Draw. No. 020361.03	Rev.	Figure 2.4-3

Form No. 960690

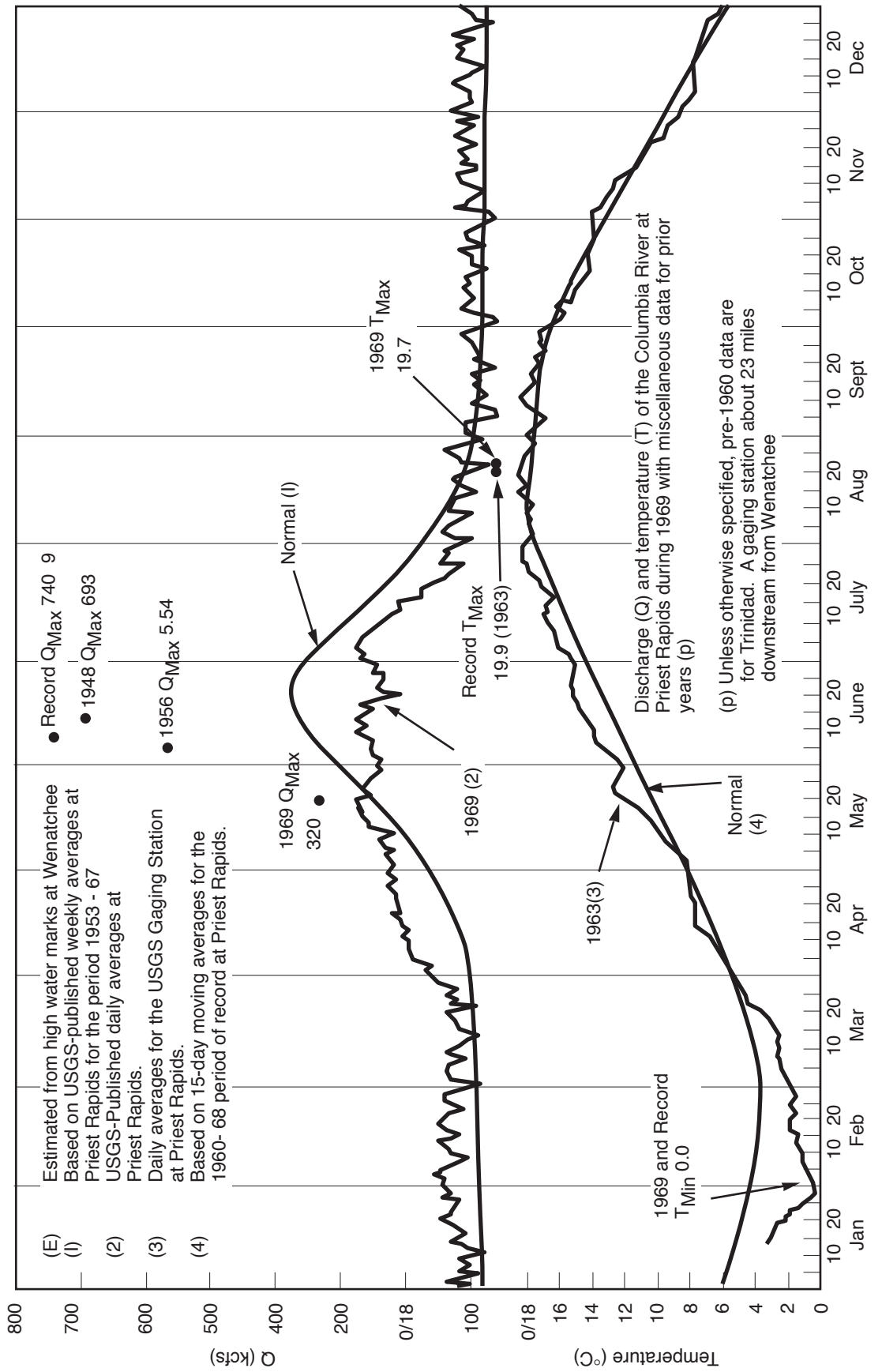

Columbia Generating Station
Final Safety Analysis Report

Discharge and Temperature of the Columbia River at Priest Rapids

Draw. No. 990306.06	Rev.	Figure 2.4-4

Form No. 960690

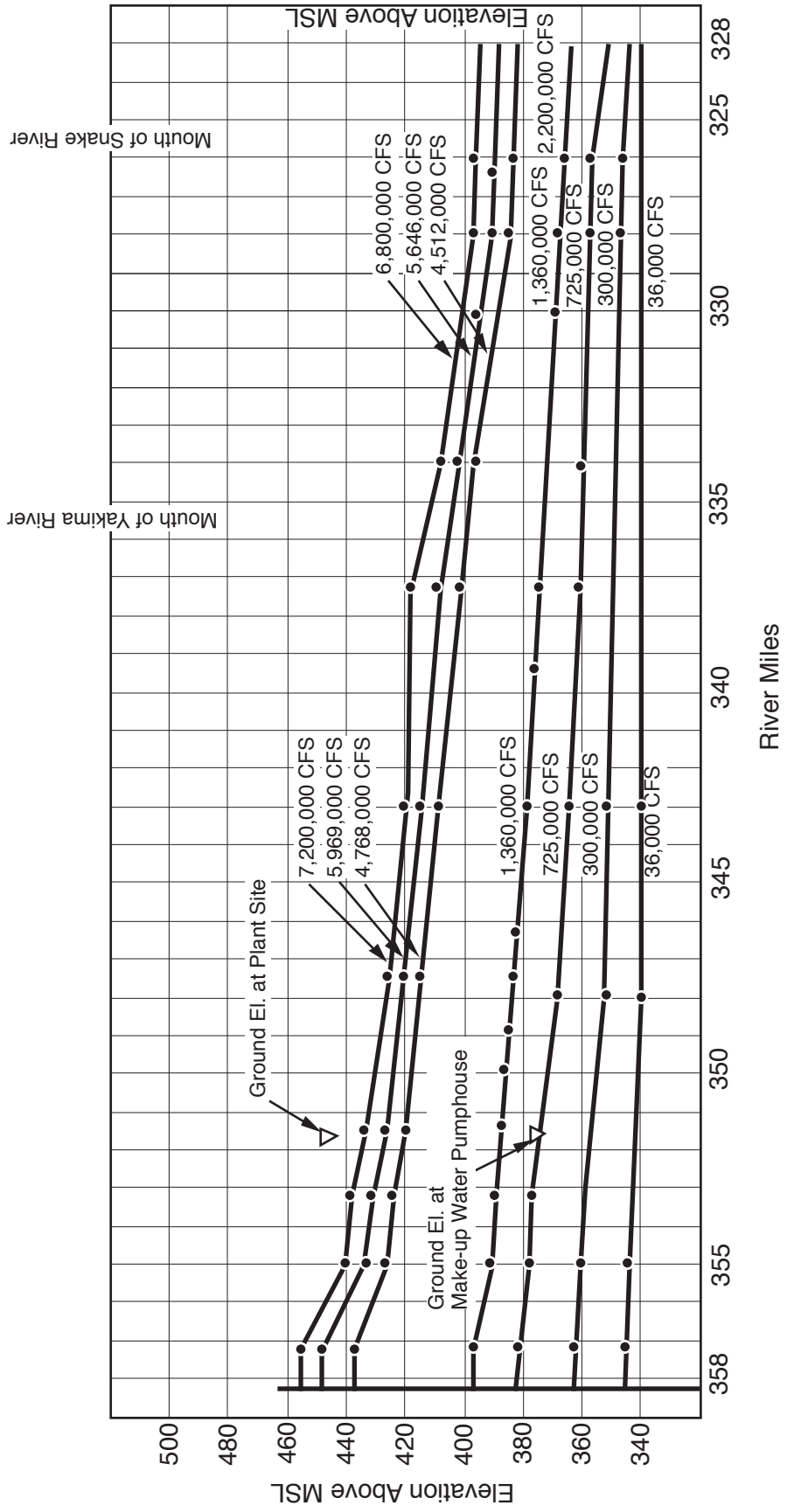

Columbia Generating Station Final Safety Analysis Report	**Columbia River Water Surface Profiles River Miles 323 to 358**		
	Draw. No. **990306.07**	Rev.	Figure **2.4-5**

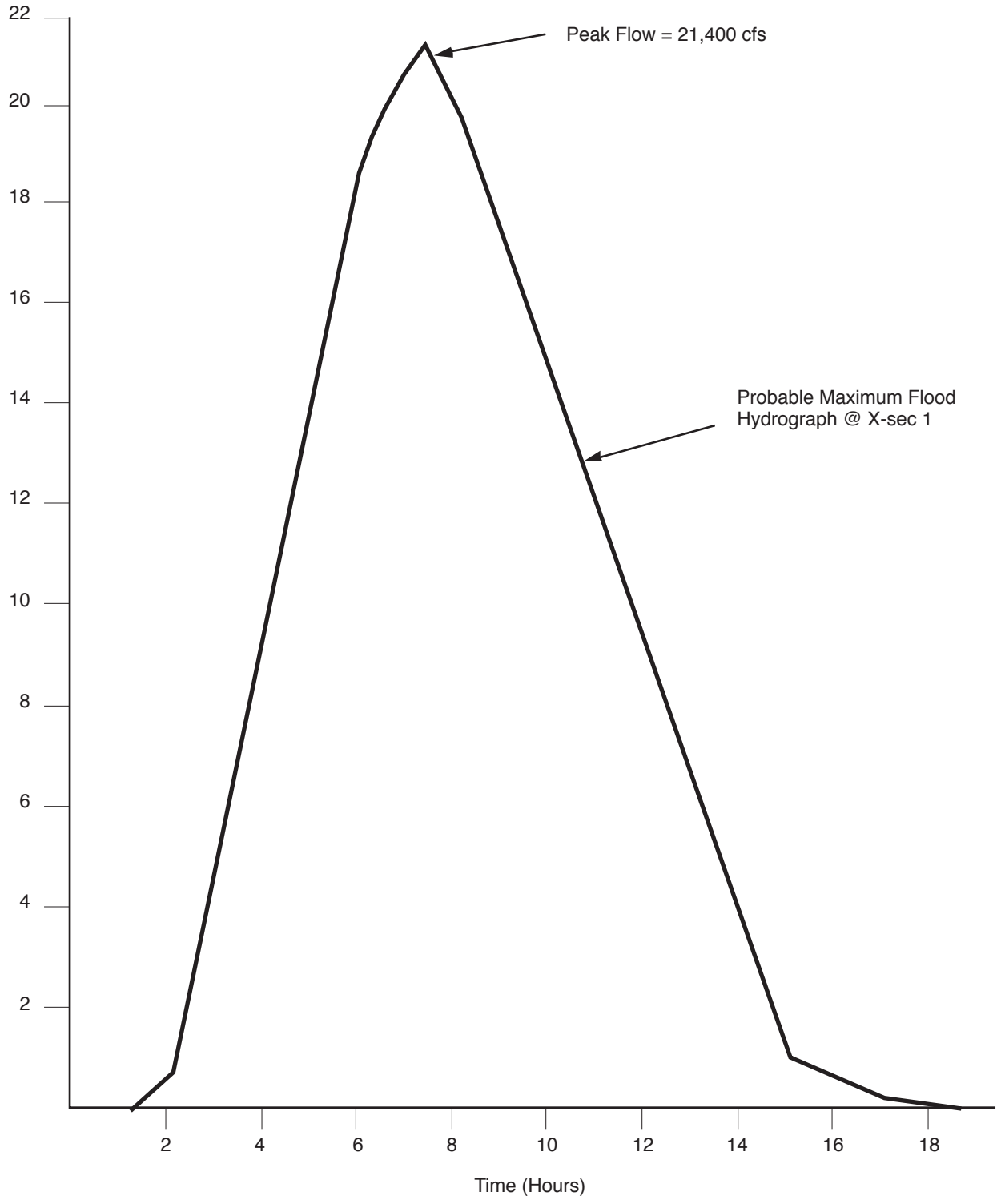

Columbia Generating Station
Final Safety Analysis Report

PMF Hydrograph Due to Thunderstorm PMP

Draw. No. 990306.31	Rev.	Figure 2.4-7



Columbia Generating Station
Final Safety Analysis Report

Probable Maximum Precipitation Drainage Basin

Draw. No. 020361.04	Rev.	Figure 2.4-8

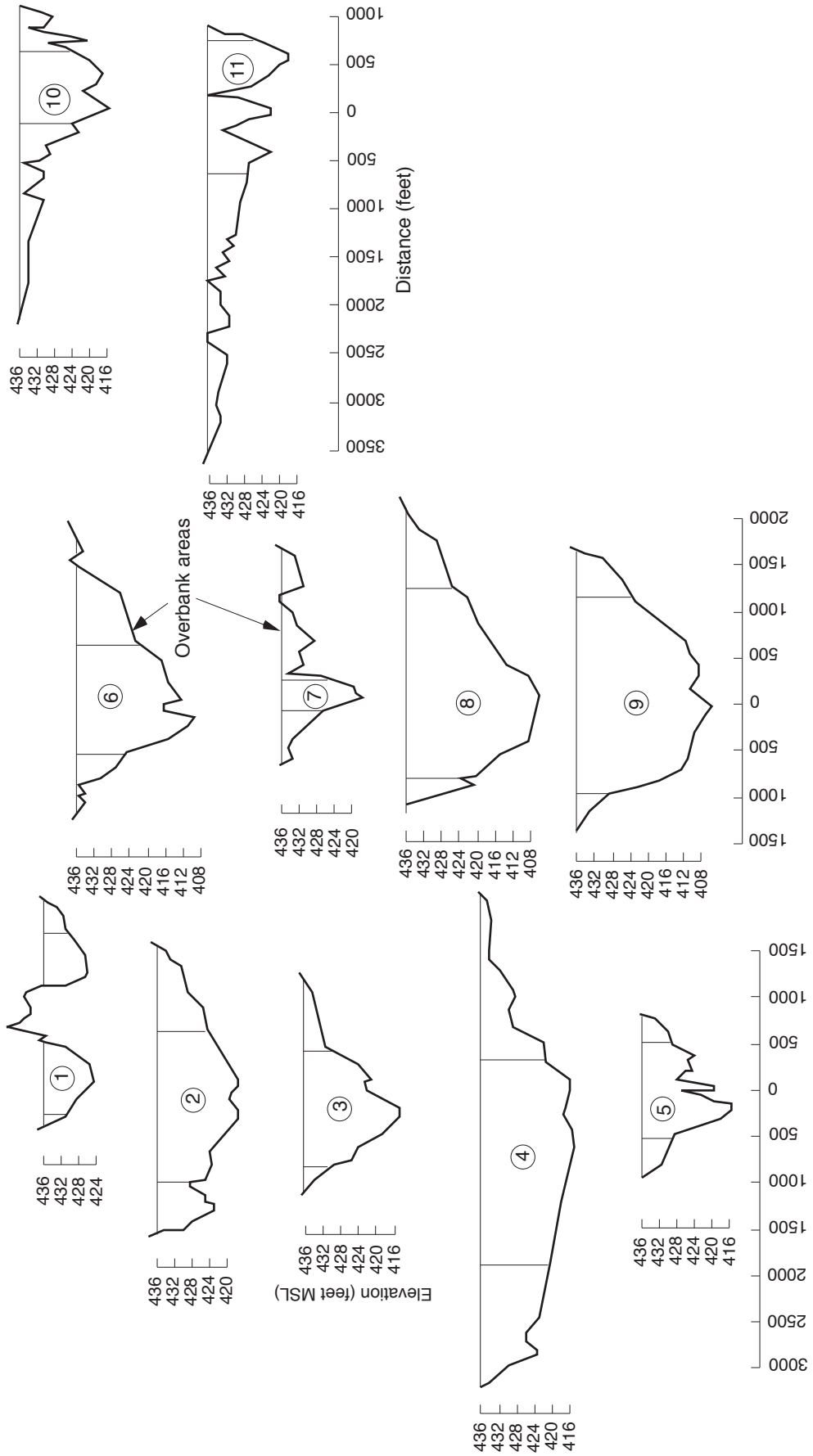

Columbia Generating Station
Final Safety Analysis Report

Probable Maximum Precipitation Channel Cross Sections

Draw. No. 990306.08	Rev.	Figure 2.4-9

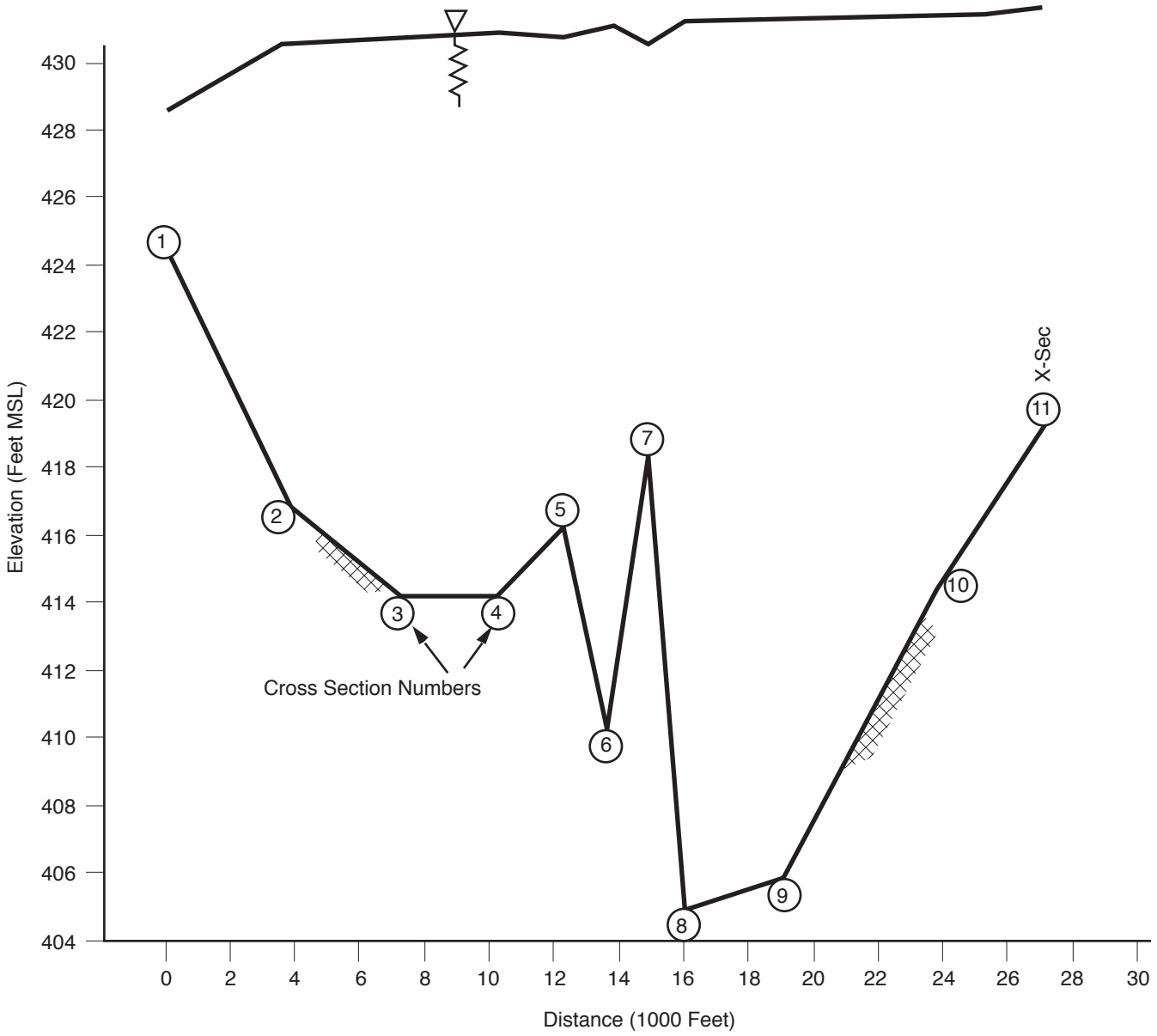

Columbia Generating Station **Final Safety Analysis Report**	**Water Surface Profile**		
	Draw. No. 990306.32	Rev.	Figure 2.4-10

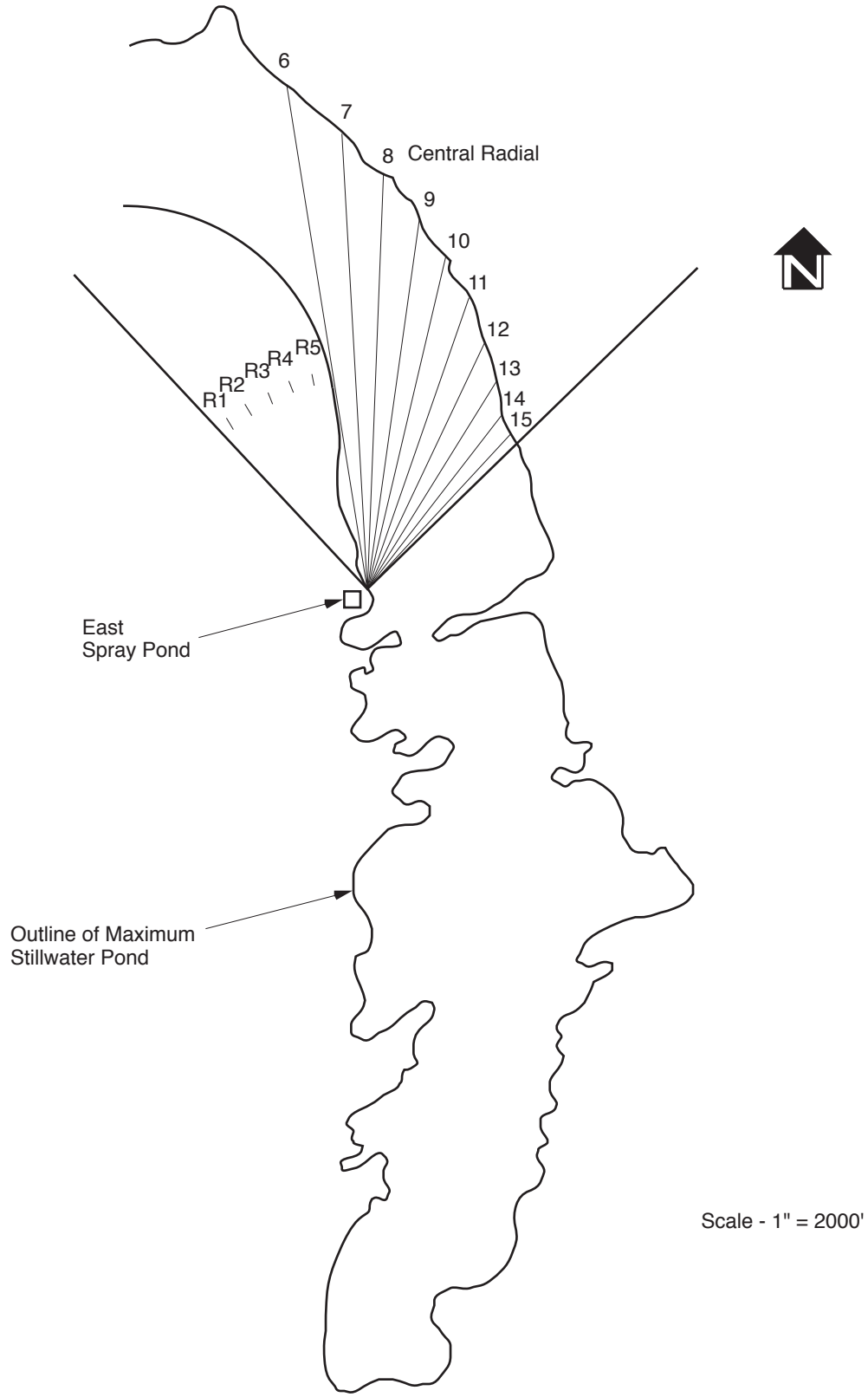

Columbia Generating Station
Final Safety Analysis Report

Effective Fetch Diagram

Draw. No.	Rev.	Figure
990306.33		2.4-11

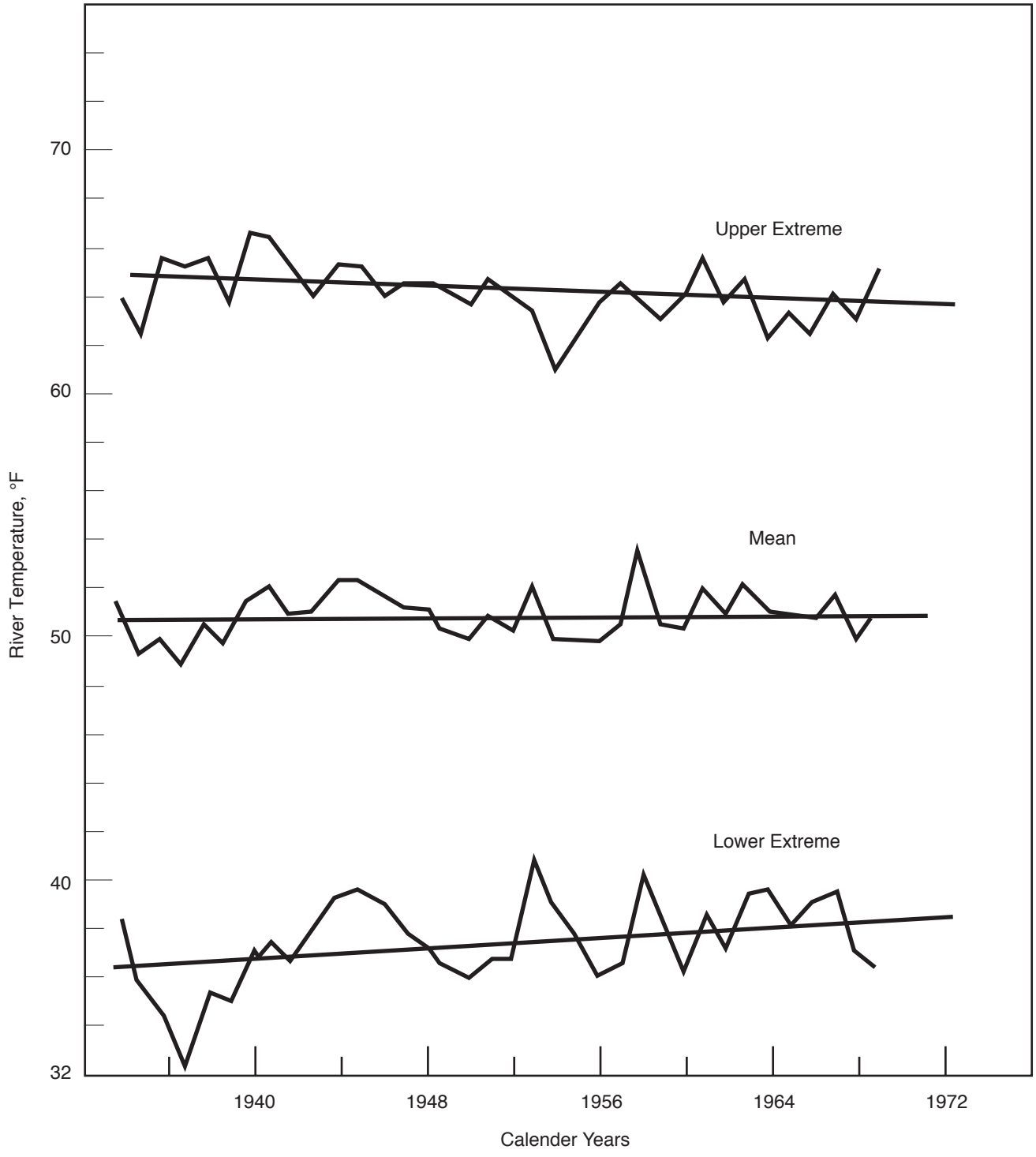

Columbia Generating Station Final Safety Analysis Report	Computed Long-Term Temperature Trends on the Columbia River at Rock Island Dam (1938 - 1962)		
	Draw. No. 990306.34	Rev.	Figure 2.4-12

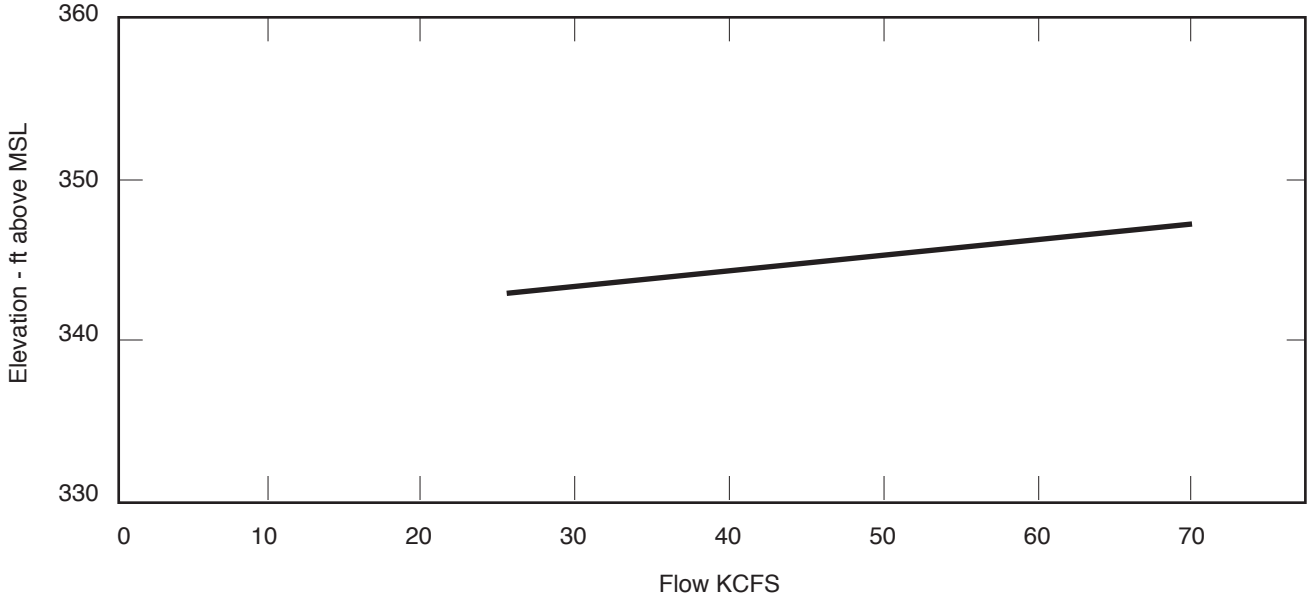

Columbia Generating Station
Final Safety Analysis Report

River Elevation at Low Flows - River Mile 352

Draw. No. 990306.35	Rev.	Figure 2.4-13

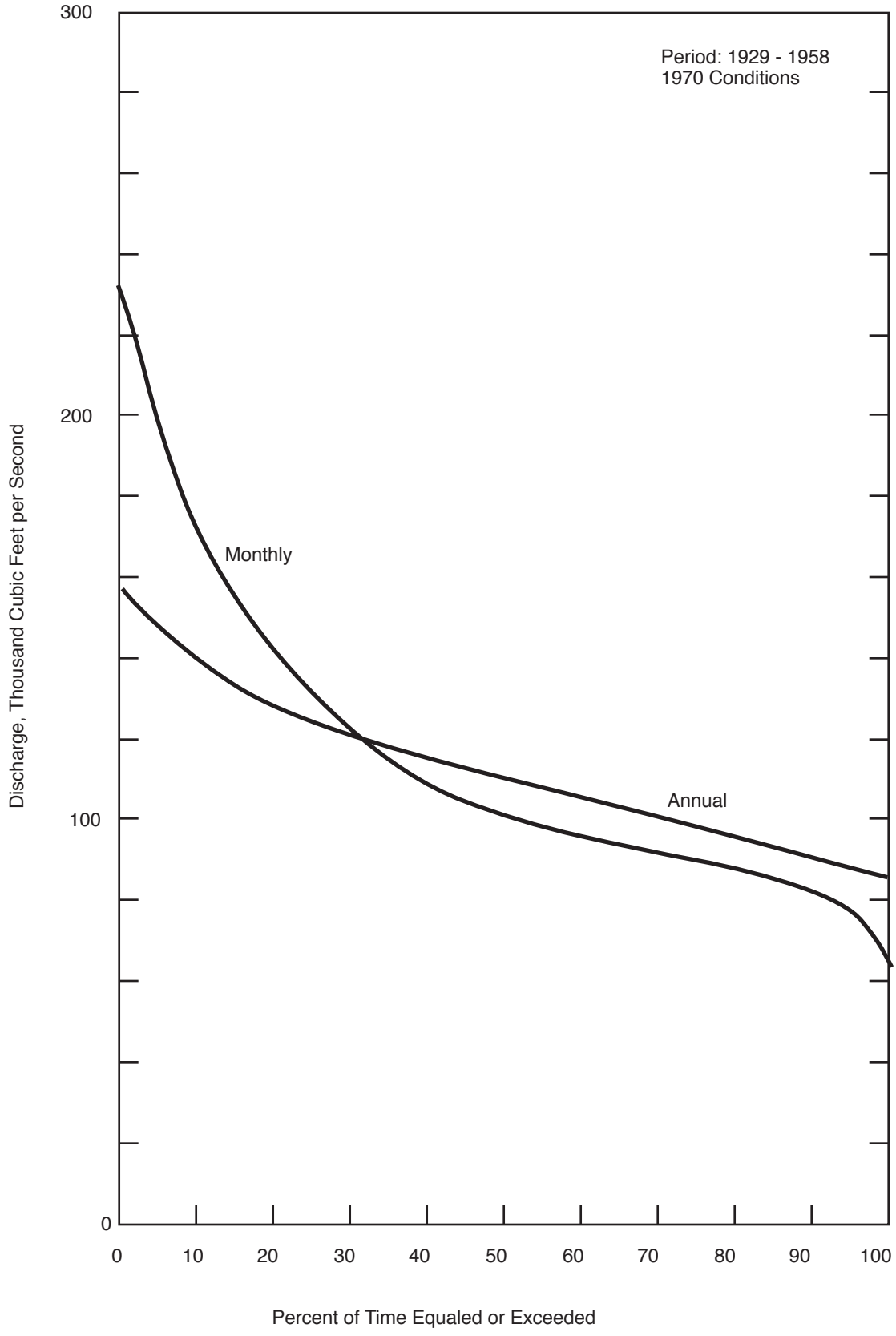

Columbia Generating Station
Final Safety Analysis Report

Duration Curves Columbia River, Priest Rapids Dam

Draw. No.	Rev.	Figure
990306.36		2.4-14

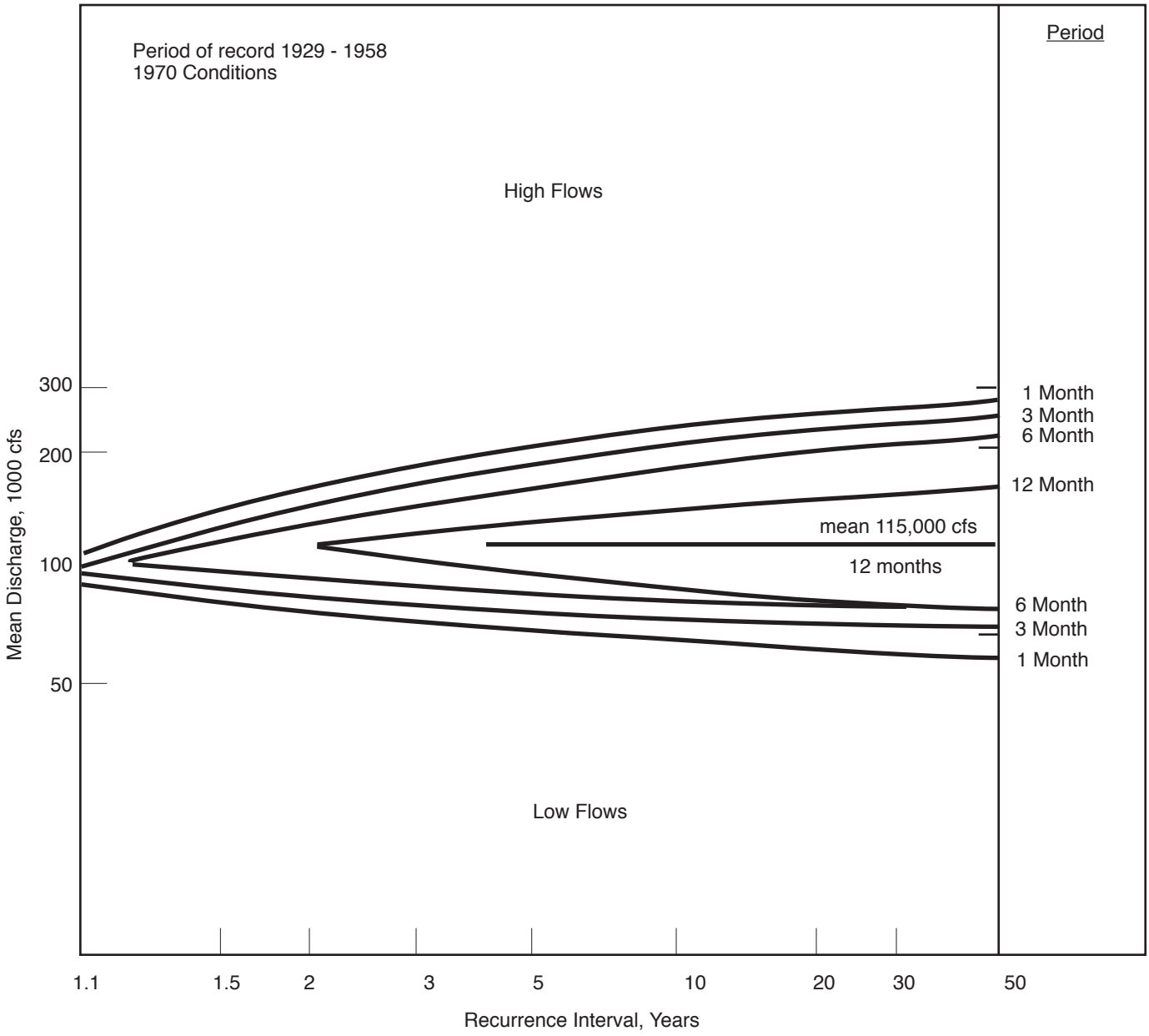

Columbia Generating Station
Final Safety Analysis Report

Frequency Curves of High and Low Flows for the Columbia River Below Priest Rapids Dam

Draw. No. 990306.37	Rev.	Figure 2.4-15

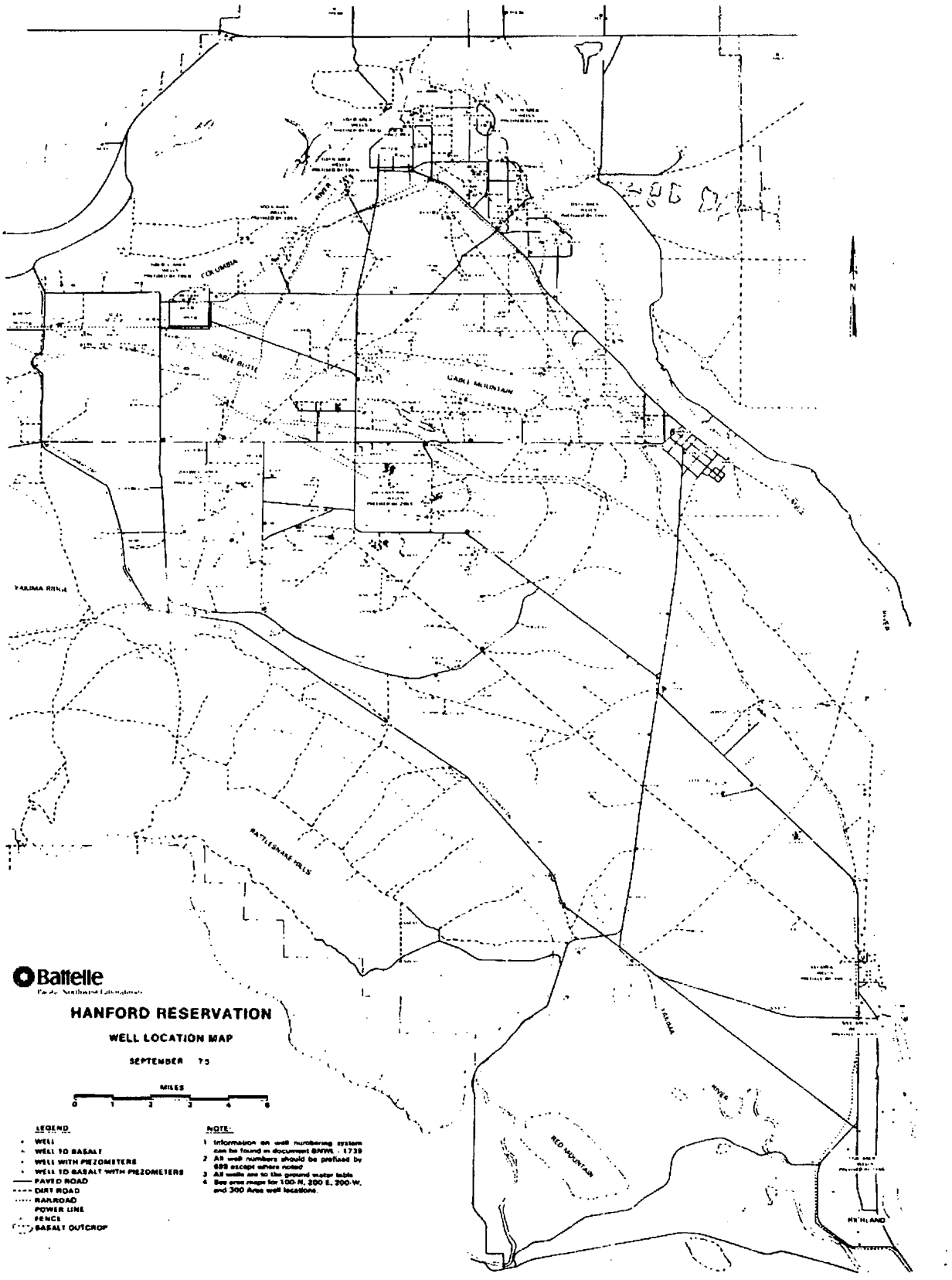

Columbia Generating Station
Final Safety Analysis Report

Monitoring Well Locations (September 1975)

Draw. No. 020361.05	Rev.	Figure 2.4-17

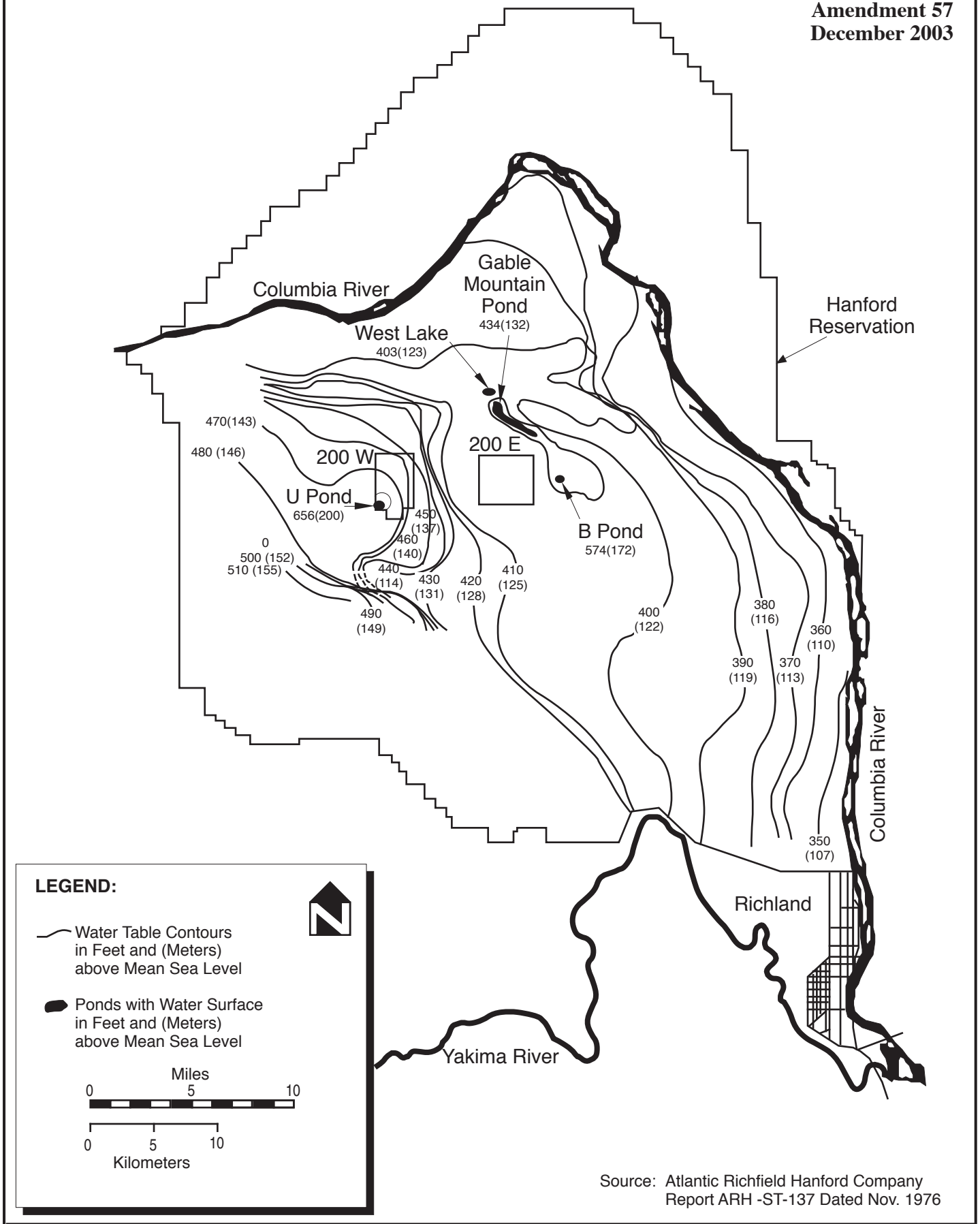

Source: Atlantic Richfield Hanford Company Report ARH -ST-137 Dated Nov. 1976

Columbia Generating Station Final Safety Analysis Report

Hanford Reservation Water Table Map (December 1975)

Draw. No. 010126.53	Rev.	Figure 2.4-18

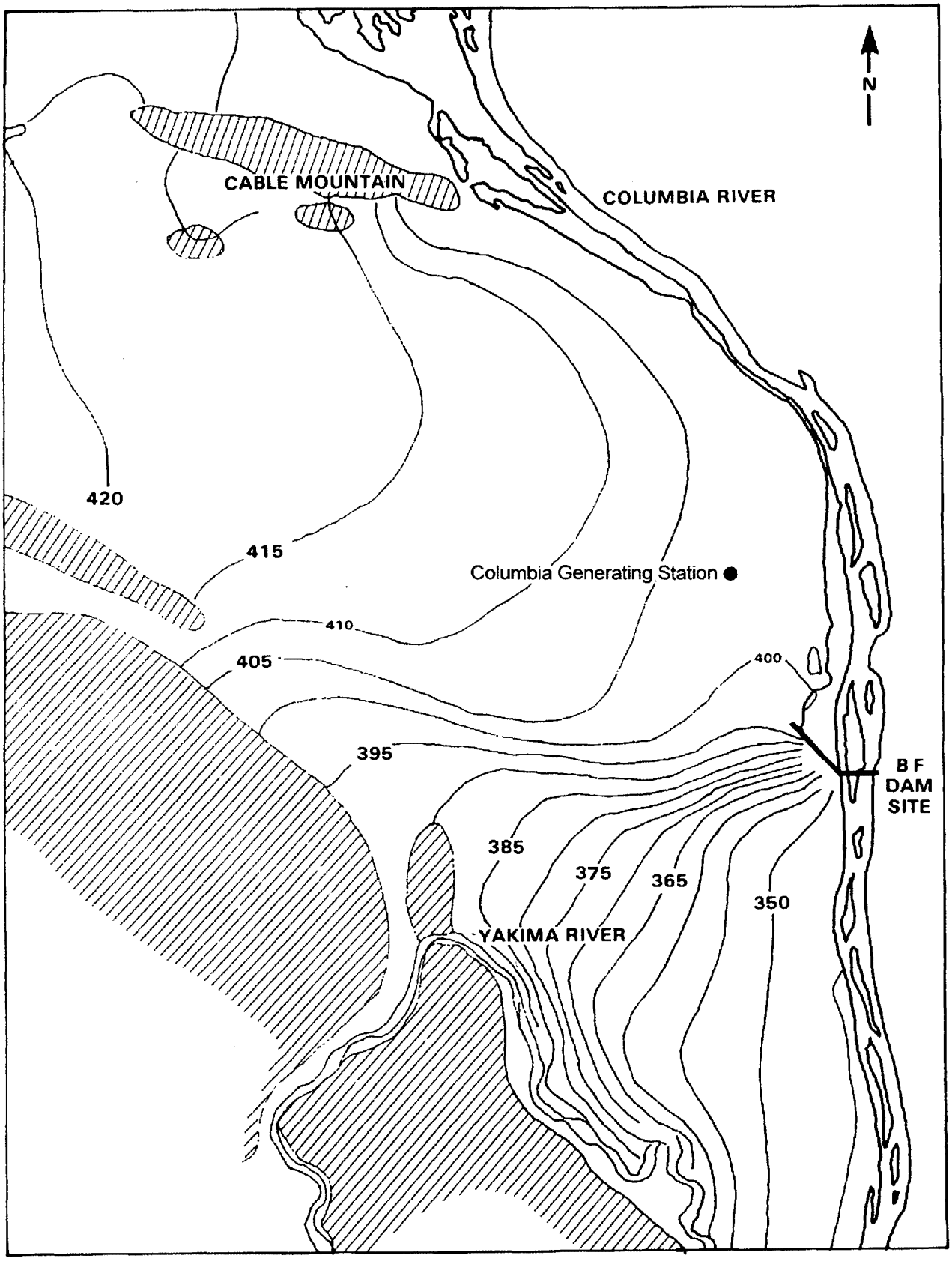

Columbia Generating Station Final Safety Analysis Report	Groundwater Contours Assuming Construction of the Ben Franklin Dam		
	Draw. No. 020361.06	Rev.	Figure 2.4-19

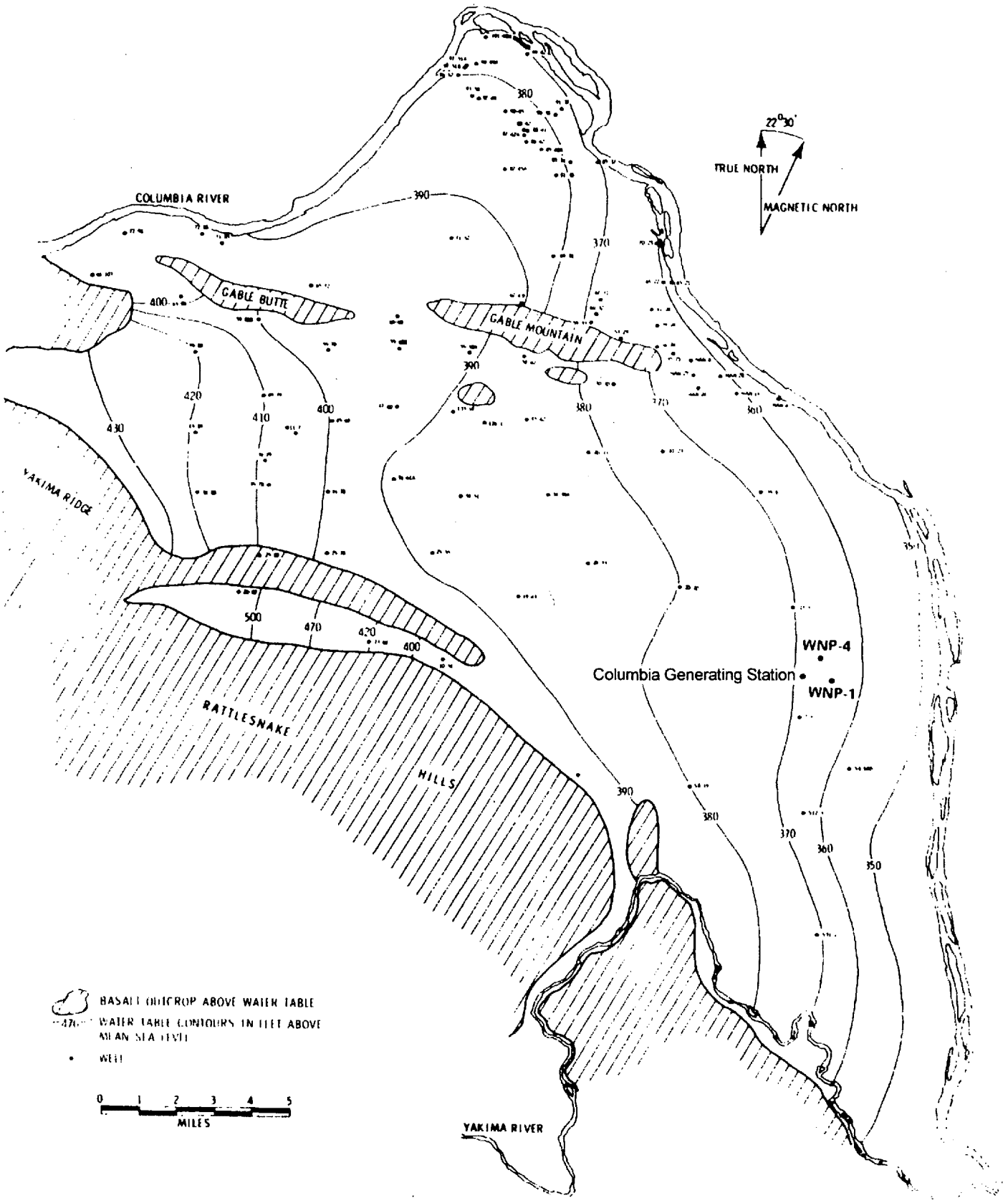

Columbia Generating Station Final Safety Analysis Report	**Hanford Reservation Water Table Map (January 1944)**		
	Draw. No. 020361.07	Rev.	Figure 2.4-20

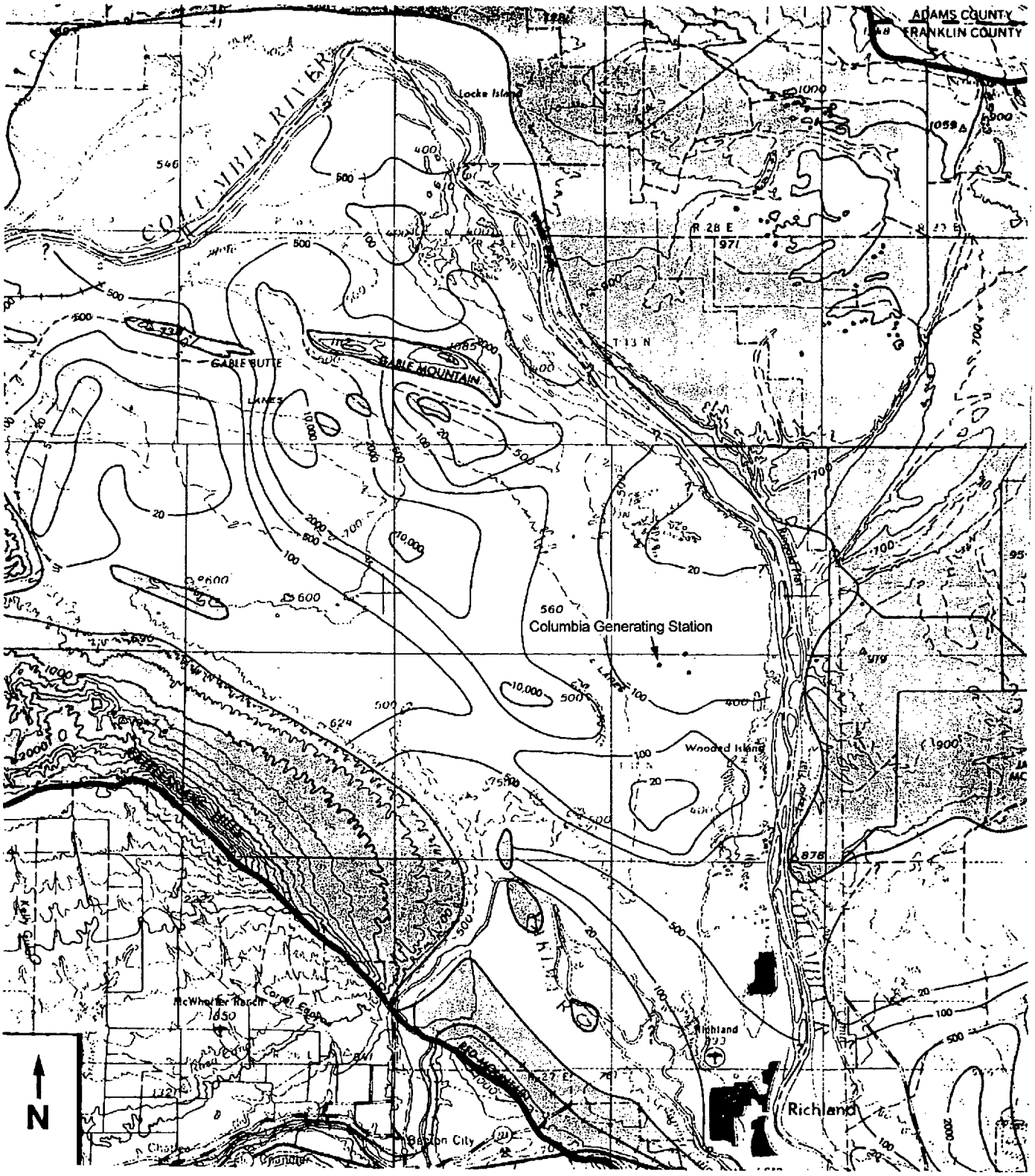

HYDRAULIC CONDUCTIVITY ISOPETHS IN FEET PER DAY
SOURCE: PLATE III-5 FROM REFERENCE 2.4-39

Columbia Generating Station **Final Safety Analysis Report**	**Hydraulic Conductivities in the Unconfined Aquifer**		
	Draw. No. 020361.08	Rev.	Figure 2.4-21

Form No. 960690

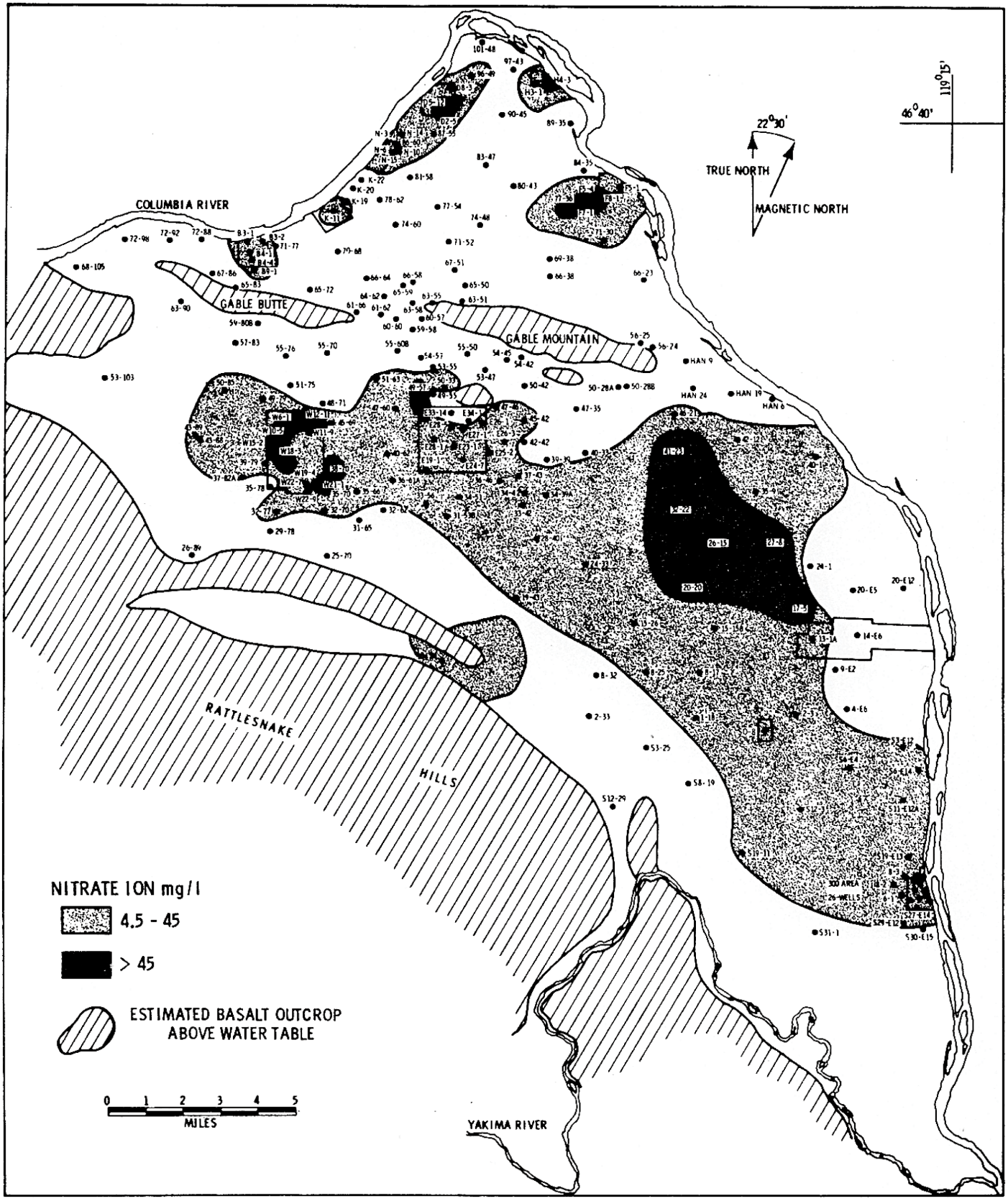

Columbia Generating Station **Final Safety Analysis Report**	**Nitrate (NO3) Concentrations (December 1976)**		
	Draw. No. **020361.09**	Rev.	Figure **2.4-22**

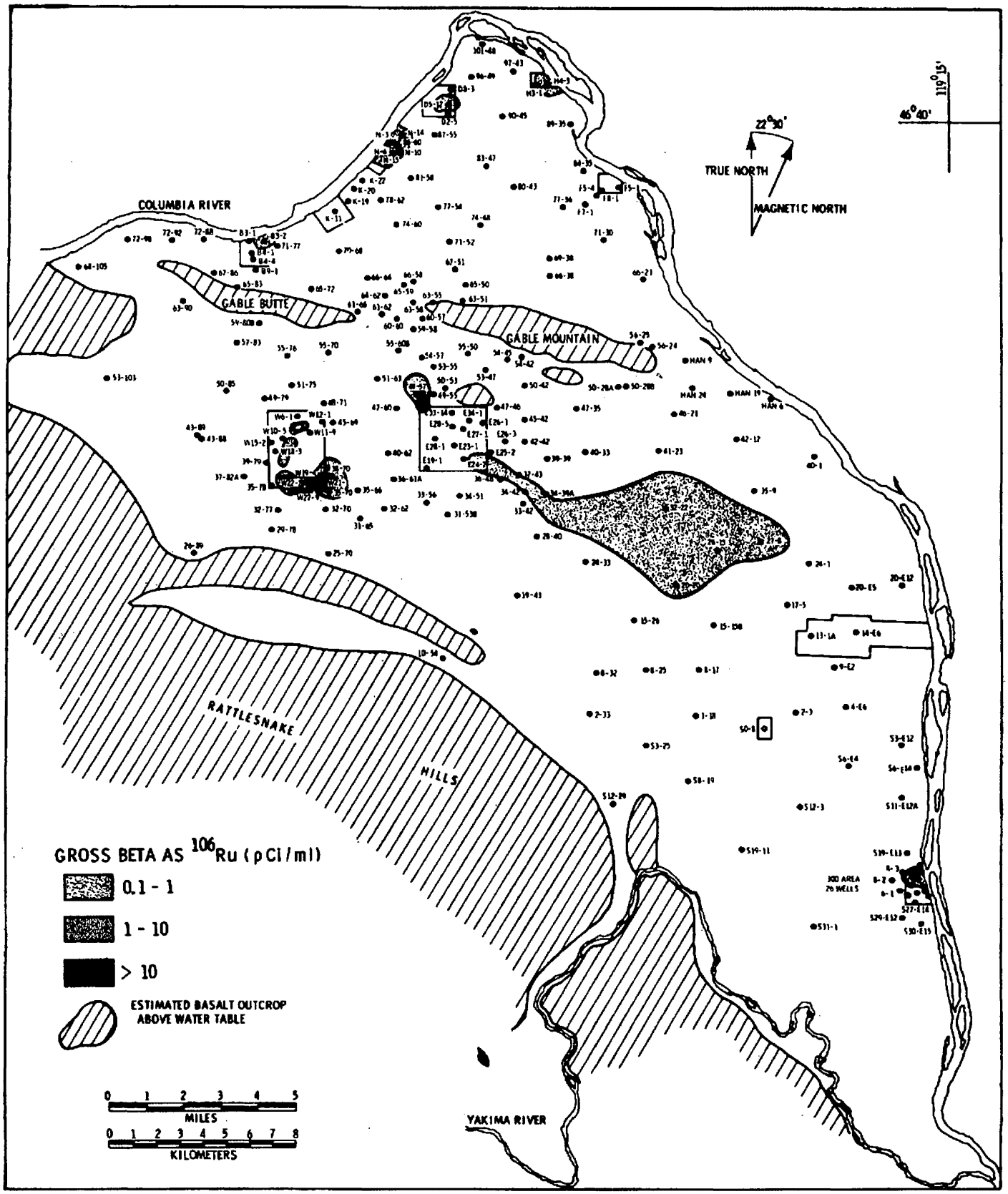

Columbia Generating Station Final Safety Analysis Report	**Gross Beta Concentrations (December 1976)**		
	Draw. No. 020361.10	Rev.	Figure 2.4-23

Form No. 960690

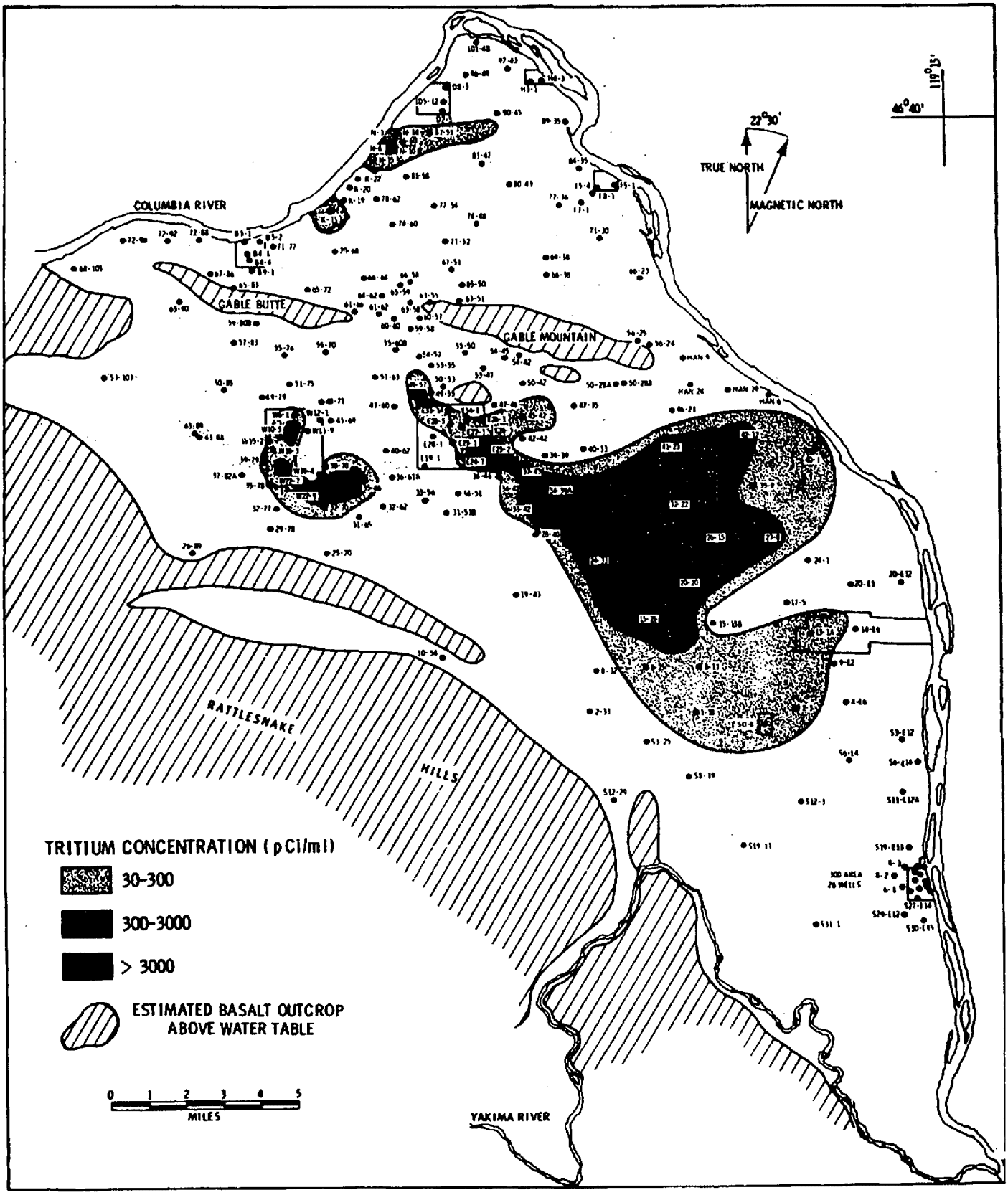

Columbia Generating Station Final Safety Analysis Report	**Tritium (^{3}H) Concentrations (December 1976)**		
	Draw. No. 020361.11	Rev.	Figure 2.4-24

Form No. 960690

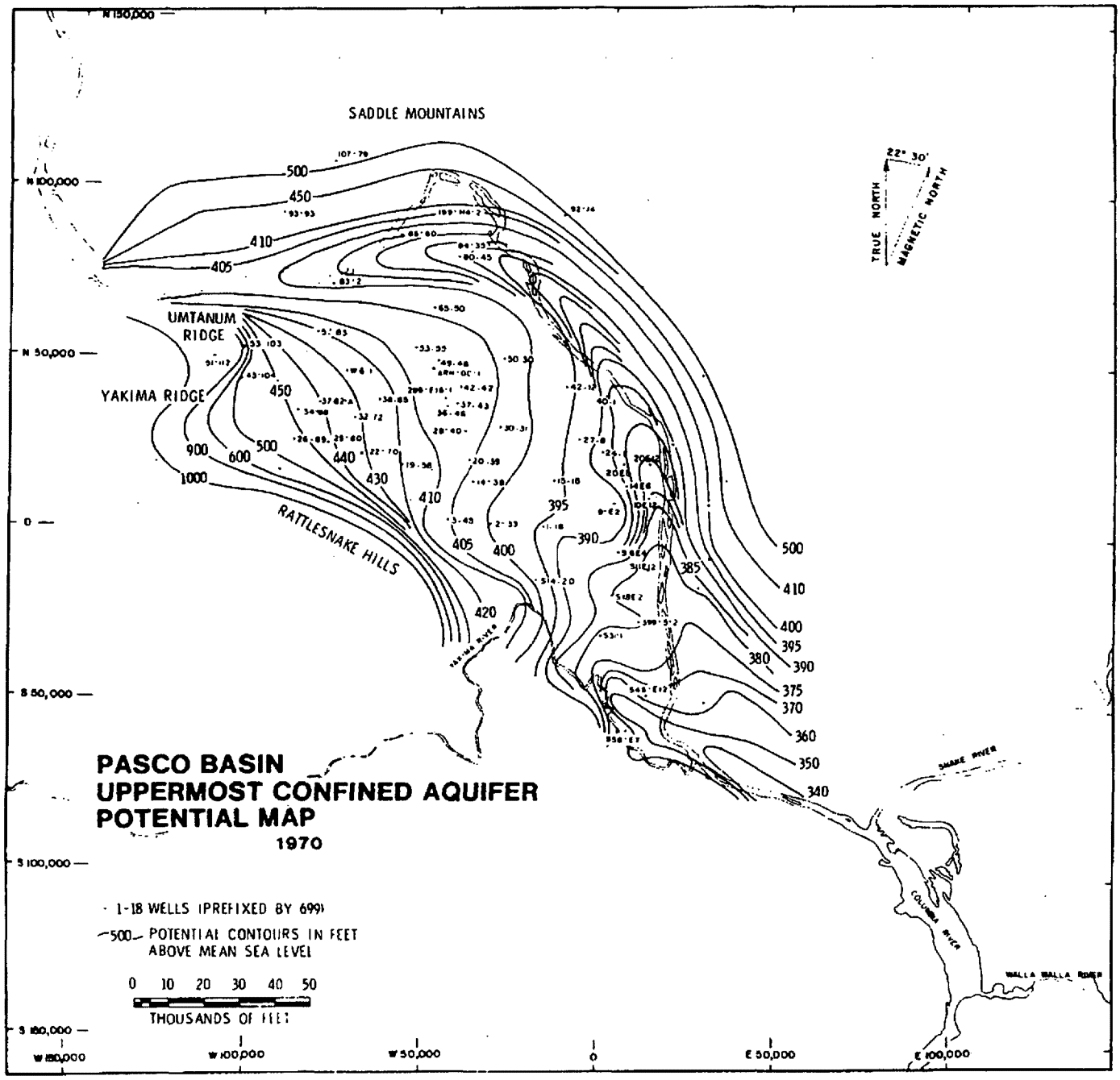

Columbia Generating Station Final Safety Analysis Report	Pasco Basin Uppermost Confined Aquifer Potential Map (1970)		
	Draw. No. 020361.12	Rev.	Figure 2.4-25

Form No. 960690

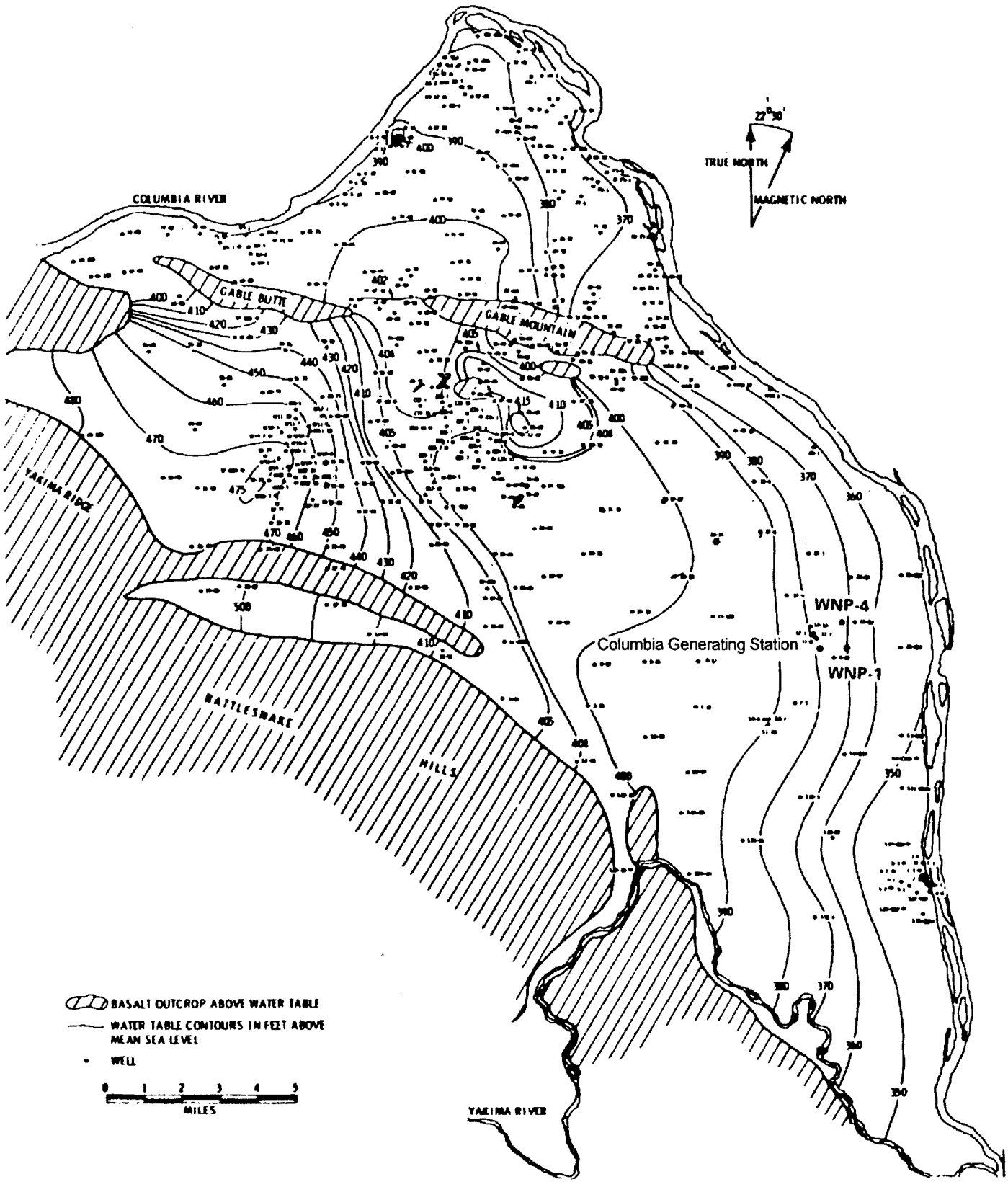

Columbia Generating Station Final Safety Analysis Report	**Hanford Reservation Water Table Map (September 1973)**		
	Draw. No. 020361.13	Rev.	Figure 2.4-26

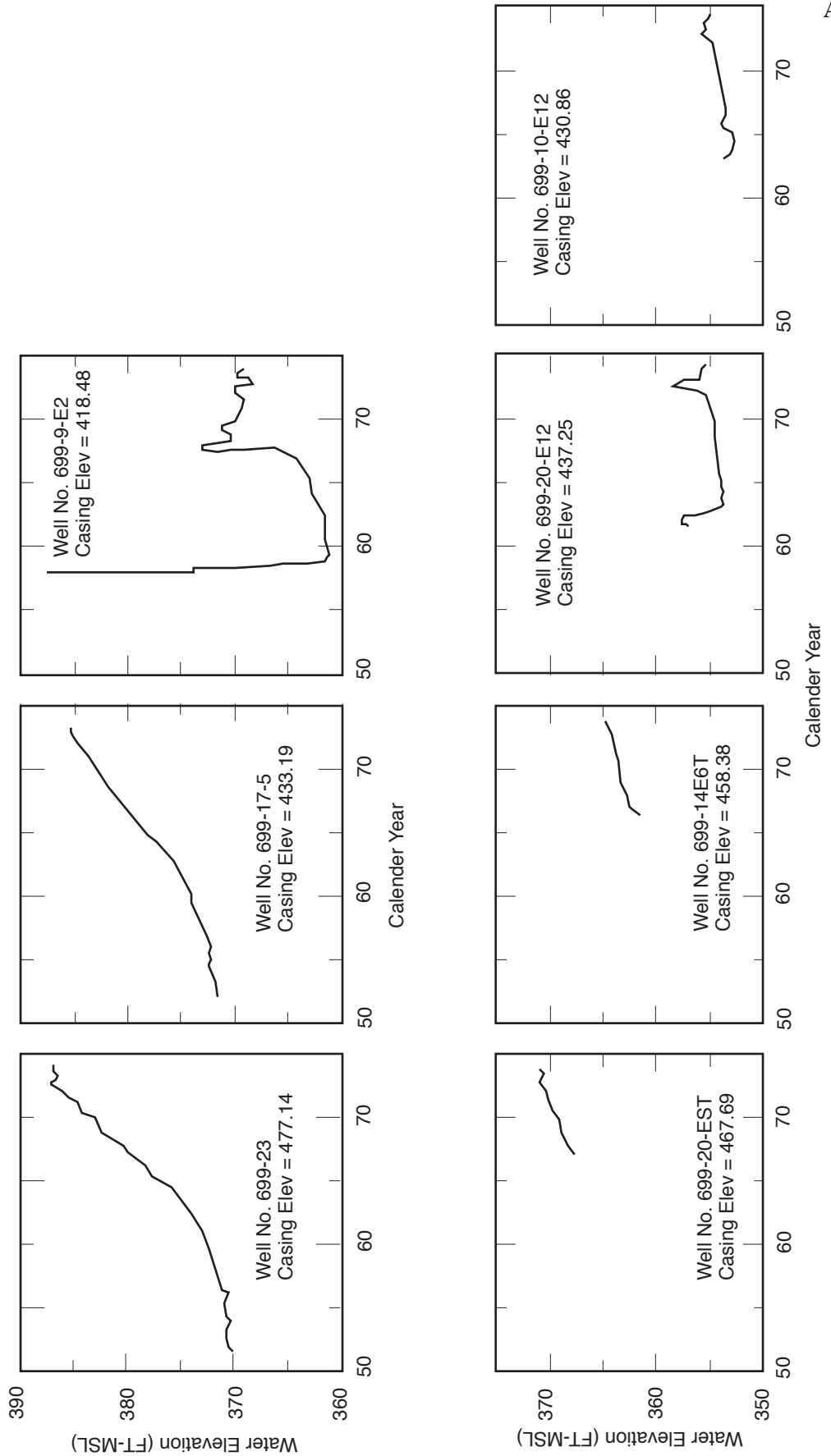

Columbia Generating Station
Final Safety Analysis Report

Well Hydrographs

Draw. No. 990306.09	Rev.	Figure 2.4-27.1

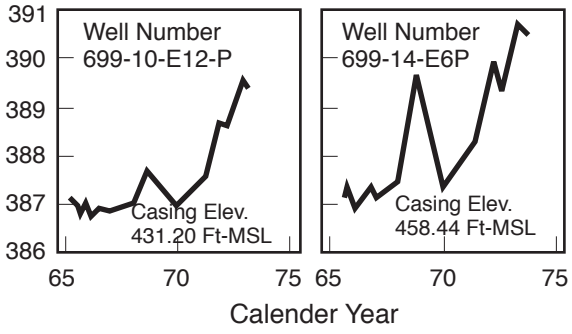

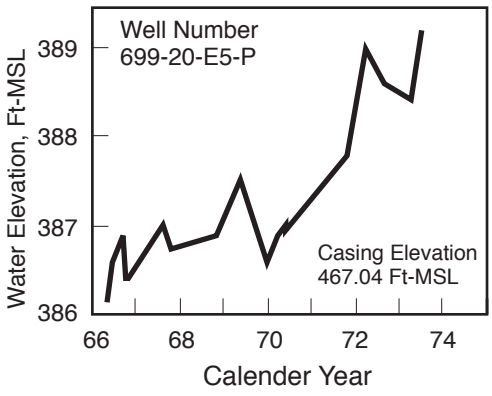

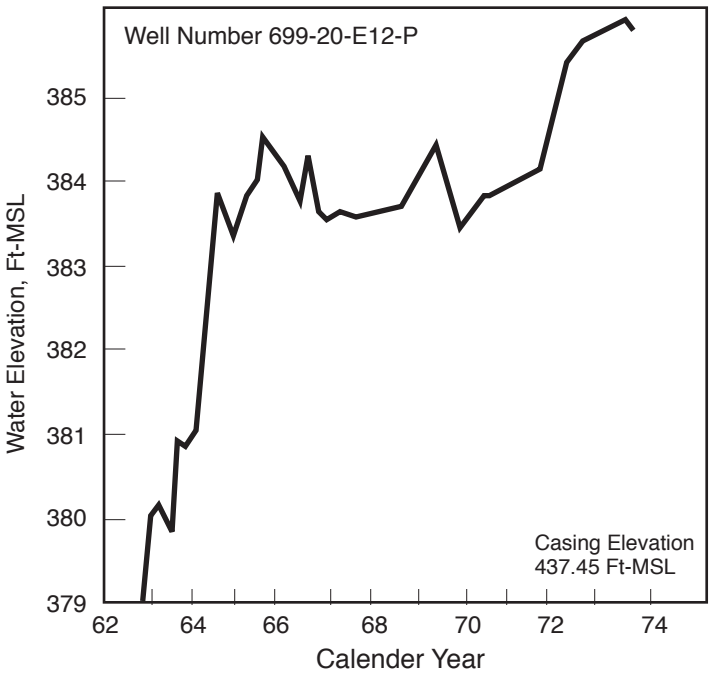

Columbia Generating Station **Final Safety Analysis Report**	**Well Hydrographs**		
	Draw. No. **990306.39**	Rev.	Figure **2.4-27.2**

2.5 GEOLOGY, SEISMOLOGY, AND GEOTECHNICAL ENGINEERING

The information discussing the geology, seismology, and geotechnical engineering is contained in a technical memorandum, TM-2143, "Geology, Seismology, and Geotechnical Engineering Report." This report is incorporated by reference into the FSAR and as such is subject to the same controls as the FSAR.

Chapter 3

DESIGN CRITERIA - STRUCTURES, COMPONENTS, EQUIPMENT, AND SYSTEMS

TABLE OF CONTENTS

Section — Page

3.1 CONFORMANCE WITH NRC GENERAL DESIGN CRITERIA 3.1-1
3.1.1 SUMMARY DESCRIPTION 3.1-1
3.1.2 CRITERION CONFORMANCE 3.1-1
3.1.2.1 Group I - Overall Requirements 3.1-1
3.1.2.1.1 Criterion 1 - Quality Standards and Records 3.1-1
3.1.2.1.2 Criterion 2 - Design Bases for Protection Against Natural Phenomena ... 3.1-3
3.1.2.1.3 Criterion 3 - Fire Protection 3.1-4
3.1.2.1.4 Criterion 4 - Environmental and Missile Design Bases 3.1-5
3.1.2.1.5 Criterion 5 - Sharing of Structures, Systems, and Components 3.1-6
3.1.2.2 Group II - Protection by Multiple Fission Product Barriers 3.1-7
3.1.2.2.1 Criterion 10 - Reactor Design 3.1-7
3.1.2.2.2 Criterion 11 - Reactor Inherent Protection 3.1-8
3.1.2.2.3 Criterion 12 - Suppression of Reactor Power Oscillations 3.1-9
3.1.2.2.4 Criterion 13 - Instrumentation and Control 3.1-10
3.1.2.2.5 Criterion 14 - Reactor Coolant Pressure Boundary 3.1-12
3.1.2.2.6 Criterion 15 - Reactor Coolant System Design 3.1-14
3.1.2.2.7 Criterion 16 - Containment Design 3.1-15
3.1.2.2.8 Criterion 17 - Electrical Power Systems 3.1-16
3.1.2.2.9 Criterion 18 - Inspection and Testing of Electric Power Systems 3.1-18
3.1.2.2.10 Criterion 19 - Control Room 3.1-19
3.1.2.3 Group III - Protection and Reactivity Control System 3.1-21
3.1.2.3.1 Criterion 20 - Protection System Functions 3.1-21
3.1.2.3.2 Criterion 21 - Protection System Reliability and Testability 3.1-22
3.1.2.3.3 Criterion 22 - Protection System Independence 3.1-23
3.1.2.3.4 Criterion 23 - Protection System Failure Modes 3.1-24
3.1.2.3.5 Criterion 24 - Separation of Protection and Control Systems 3.1-25
3.1.2.3.6 Criterion 25 - Protection System Requirements for Reactivity Control Malfunctions 3.1-26
3.1.2.3.7 Criterion 26 - Reactivity Control System Redundancy and Capability 3.1-27
3.1.2.3.8 Criterion 27 - Combined Reactivity Control Systems Capability 3.1-29
3.1.2.3.9 Criterion 28 - Reactivity Limits 3.1-30
3.1.2.3.10 Criterion 29 - Protection Against Anticipated Operational Occurrences 3.1-32
3.1.2.4 Group IV - Fluid Systems 3.1-33
3.1.2.4.1 Criterion 30 - Quality of Reactor Coolant Pressure Boundary 3.1-33

Chapter 3

DESIGN CRITERIA - STRUCTURES, COMPONENTS, EQUIPMENT, AND SYSTEMS

TABLE OF CONTENTS

Section — Page

3.1.2.4.2 Criterion 31 - Fracture Prevention of Reactor Coolant Pressure Boundary 3.1-34
3.1.2.4.3 Criterion 32 - Inspection of Reactor Coolant Pressure Boundary 3.1-35
3.1.2.4.4 Criterion 33 - Reactor Coolant Makeup 3.1-36
3.1.2.4.5 Criterion 34 - Residual Heat Removal 3.1-37
3.1.2.4.6 Criterion 35 - Emergency Core Cooling 3.1-39
3.1.2.4.7 Criterion 36 - Inspection of Emergency Core Cooling System 3.1-41
3.1.2.4.8 Criterion 37 - Testing of Emergency Core Cooling System 3.1-42
3.1.2.4.9 Criterion 38 - Containment Heat Removal 3.1-43
3.1.2.4.10 Criterion 39 - Inspection of Containment Heat Removal System 3.1-44
3.1.2.4.11 Criterion 40 - Testing of Containment Heat Removal System 3.1-45
3.1.2.4.12 Criterion 41 - Containment Atmosphere Cleanup 3.1-46
3.1.2.4.13 Criterion 42 - Inspection of Containment Atmosphere Cleanup Systems 3.1-47
3.1.2.4.14 Criterion 43 - Testing of Containment Atmosphere Cleanup Systems ... 3.1-47
3.1.2.4.15 Criterion 44 - Cooling Water 3.1-48
3.1.2.4.16 Criterion 45 - Inspection of Cooling Water System 3.1-49
3.1.2.4.17 Criterion 46 - Testing of Cooling Water System 3.1-50
3.1.2.5 Group V - Containment (Criteria 50-57) 3.1-50
3.1.2.5.1 Criterion 50 - Containment Design Basis 3.1-51
3.1.2.5.2 Criterion 51 - Fracture Prevention of Containment Pressure Boundary ... 3.1-52
3.1.2.5.3 Criterion 52 - Capability for Containment Leakage Rate Testing 3.1-53
3.1.2.5.4 Criterion 53 - Provisions for Containment Testing and Inspection 3.1-53
3.1.2.5.5 Criterion 54 - Piping Systems Penetrating Containment 3.1-54
3.1.2.5.6 Criterion 55 - Reactor Coolant Pressure Boundary Penetrating Containment 3.1-55
3.1.2.5.7 Criterion 56 - Primary Containment Isolation 3.1-56
3.1.2.5.8 Criterion 57 - Closed System Isolation Valves 3.1-57
3.1.2.6 Group VI - Fuel and Reactivity Control 3.1-58
3.1.2.6.1 Criterion 60 - Control of Releases of Radioactive Materials to the Environment 3.1-58
3.1.2.6.2 Criterion 61 - Fuel Storage and Handling and Radioactivity Control 3.1-59
3.1.2.6.2.1 New Fuel Storage 3.1-60
3.1.2.6.2.2 Spent Fuel Handling and Storage 3.1-60
3.1.2.6.2.3 Radioactive Waste Systems 3.1-61

Chapter 3

DESIGN CRITERIA - STRUCTURES, COMPONENTS, EQUIPMENT, AND SYSTEMS

TABLE OF CONTENTS (Continued)

Section — Page

3.1.2.6.3 Criterion 62 - Prevention of Criticality in Fuel Storage and Handling 3.1-62
3.1.2.6.4 Criterion 63 - Monitoring Fuel and Waste Storage 3.1-63
3.1.2.6.5 Criterion 64 - Monitoring Radioactivity Releases..... 3.1-64

3.2 CLASSIFICATION OF STRUCTURES, COMPONENTS, AND SYSTEMS 3.2-1
3.2.1 SEISMIC CLASSIFICATION 3.2-1
3.2.2 SYSTEM QUALITY GROUP CLASSIFICATIONS 3.2-2
3.2.3 SAFETY CLASSIFICATIONS 3.2-2
3.2.3.1 Safety Class 1 ..... 3.2-3
3.2.3.1.1 Definition of Safety Class 1..... 3.2-3
3.2.3.1.2 Design Requirements for Safety Class 1..... 3.2-3
3.2.3.2 Safety Class 2 ..... 3.2-3
3.2.3.2.1 Definition of Safety Class 2..... 3.2-3
3.2.3.2.2 Design Requirements for Safety Class 2..... 3.2-4
3.2.3.3 Safety Class 3 ..... 3.2-4
3.2.3.3.1 Definition of Safety Class 3..... 3.2-4
3.2.3.3.2 Design Requirement for Safety Class 3..... 3.2-4
3.2.3.4 General Class G, Structures, Systems, and Components..... 3.2-4
3.2.3.4.1 Definition of General Class Structures, Systems, and Components 3.2-4
3.2.3.4.2 Design Requirements for General Class G Structures, Systems, and Components 3.2-5
3.2.4 QUALITY ASSURANCE CLASSIFICATION..... 3.2-5
3.2.5 CORRELATION OF SAFETY CLASSES WITH OTHER DESIGN REQUIREMENTS..... 3.2-6
3.2.6 IDENTIFICATION OF SAFETY-RELATED SYSTEMS AND COMPONENTS ON FLOW DIAGRAMS AND IN THE MASTER EQUIPMENT LIST 3.2-7

3.3 WIND AND TORNADO LOADINGS..... 3.3-1
3.3.1 WIND LOADINGS 3.3-1
3.3.1.1 Design Wind Velocity 3.3-1
3.3.1.2 Determination of Applied Forces..... 3.3-1
3.3.2 TORNADO LOADINGS..... 3.3-3
3.3.2.1 Applicable Design Parameters 3.3-3

Chapter 3

DESIGN CRITERIA - STRUCTURES, COMPONENTS, EQUIPMENT, AND SYSTEMS

TABLE OF CONTENTS (Continued)

Section — Page

3.3.2.2 Determination of Forces on Structures 3.3-3
3.3.2.3 Additional Design Features 3.3-5
3.3.2.4 Effect of Failure of Structures or Components Not Designed for Tornado Loads 3.3-6
3.3.2.5 Conformance with Regulatory Guide 1.76, Revision 0 ..... 3.3-8
3.3.3 REFERENCES 3.3-8

3.4 WATER LEVEL (FLOOD) DESIGN 3.4-1
3.4.1 FLOOD PROTECTION 3.4-1
3.4.1.1 External Flood Levels 3.4-1
3.4.1.1.1 Design Basis Flood 3.4-1
3.4.1.1.2 Breach of the Grand Coulee Dam 3.4-1
3.4.1.1.3 Acceptance Criteria 3.4-1
3.4.1.2 Groundwater Levels 3.4-1
3.4.1.2.1 Design Basis Groundwater 3.4-1
3.4.1.2.2 Breach of the Grand Coulee Dam 3.4-2
3.4.1.2.3 Design Basis Flood Probable Maximum Precipitation 3.4-2
3.4.1.3 Identification of Structures, Systems, and Components 3.4-2
3.4.1.4 Description of Structures, Systems, and Components 3.4-2
3.4.1.4.1 Flood Protection Requirements 3.4-2
3.4.1.4.1.1 External Flood Protection Requirements 3.4-2
3.4.1.4.1.2 Internal Flood Protection Requirements 3.4-2
3.4.1.4.2 Groundwater Protection Requirements 3.4-4
3.4.1.5 Flood Protection Measures 3.4-6
3.4.1.5.1 External Flood Protection Measures 3.4-6
3.4.1.5.2 Internal Flood Protection Measures 3.4-6
3.4.1.6 Emergency Flood Protection 3.4-6
3.4.2 ANALYSIS PROCEDURES 3.4-6

3.5 MISSILE PROTECTION 3.5-1
3.5.1 MISSILE SELECTION AND DESCRIPTIONS 3.5-1
3.5.1.1 Internally Generated Missiles (Outside Containment) 3.5-1
3.5.1.1.1 Systems Available for Safe Shutdown 3.5-1
3.5.1.1.2 Missiles Due to Rotating Equipment Failure 3.5-2
3.5.1.1.3 Missiles Due to Pressurized Component Failure 3.5-2

Chapter 3

DESIGN CRITERIA - STRUCTURES, COMPONENTS, EQUIPMENT, AND SYSTEMS

TABLE OF CONTENTS (Continued)

Section — Page

3.5.1.1.4 Evaluation of Postulated Missiles 3.5-5
3.5.1.1.5 Example of Postulated Missile Evaluation 3.5-9
3.5.1.2 Internally Generated Missiles (Inside Containment) 3.5-10
3.5.1.2.1 Systems Available for Safe Shutdown 3.5-10
3.5.1.2.2 Missiles Due to Rotating Equipment 3.5-11
3.5.1.2.3 Missiles Due to Pressurized Component Failure 3.5-11
3.5.1.2.4 Falling Objects 3.5-12
3.5.1.2.5 Secondary Missiles Generated by Postulated Credible Primary Missiles 3.5-12
3.5.1.3 Turbine Missiles 3.5-12
3.5.1.3.1 Safety-Related Targets 3.5-13
3.5.1.3.2 Turbine Placement and Orientation 3.5-13
3.5.1.3.3 Missile Identification and Characteristics 3.5-13
3.5.1.3.3.1 High Pressure Turbine 3.5-13
3.5.1.3.3.2 Low Pressure Turbine 3.5-14
3.5.1.3.4 Strike and Damage Probability 3.5-15
3.5.1.3.4.1 Missile Generation Probability 3.5-15
3.5.1.3.4.2 Strike Probability (P2) and Damage Probability (P3) 3.5-17
3.5.1.3.4.3 Combined Overall Probability (P4) 3.5-17
3.5.1.3.5 Turbine Overspeed Protection System and Testing 3.5-17
3.5.1.3.6 Turbine Valve Testing 3.5-18
3.5.1.3.7 Turbine Characteristics 3.5-18
3.5.1.4 Missiles Generated by Natural Phenomena 3.5-18
3.5.1.4.1 Tornado-Generated External Missiles 3.5-18
3.5.1.4.2 Tornado-Generated Internal Missiles 3.5-21
3.5.1.4.3 Flood Generated Missiles 3.5-21
3.5.1.4.4 Protection and Design 3.5-21
3.5.1.5 Missiles Generated by Events Near the Site 3.5-21
3.5.1.6 Aircraft Hazards 3.5-22
3.5.1.6.1 Airports 3.5-22
3.5.1.6.2 Military Airspace Use 3.5-23
3.5.1.6.3 Federal Airways and Airport Approaches 3.5-23
3.5.1.6.4 Summary 3.5-24
3.5.2 SYSTEMS TO BE PROTECTED 3.5-24

Chapter 3

DESIGN CRITERIA - STRUCTURES, COMPONENTS, EQUIPMENT, AND SYSTEMS

TABLE OF CONTENTS (Continued)

Section — Page

3.5.3 BARRIER DESIGN 3.5-26
3.5.3.1 Concrete Barriers 3.5-26
3.5.3.2 Steel Barriers 3.5-27
3.5.3.3 Earth Barriers 3.5-27
3.5.3.4 Applications 3.5-27
3.5.4 REFERENCES 3.5-28

3.6 PROTECTION AGAINST DYNAMIC EFFECTS ASSOCIATED WITH THE POSTULATED RUPTURE OF PIPING 3.6-1
3.6.1 PLANT DESIGN FOR PROTECTION AGAINST POSTULATED PIPING FAILURES IN FLUID SYSTEMS OUTSIDE PRIMARY CONTAINMENT 3.6-1
3.6.1.1 Energy Classification of Fluid Piping Systems Outside Containment 3.6-2
3.6.1.1.1 High and Moderate Energy Criteria 3.6-2
3.6.1.1.2 Systems Subject to Analysis 3.6-2
3.6.1.2 Criteria for Establishing the Postulated Design Basis Break Locations 3.6-2
3.6.1.3 Criteria for Establishing the Postulated Design Basis Break Orientations 3.6-3
3.6.1.4 Summary of Dynamic Analysis of Category I Piping and Supports 3.6-3
3.6.1.4.1 Design Basis Breaks for the Dynamic Analysis Outside Primary Containment 3.6-3
3.6.1.4.2 Diagrams of Mathematical Models Used in the Dynamic Analysis 3.6-3
3.6.1.4.2.1 Models Used for Pipe Whip Restraint Design 3.6-3
3.6.1.4.2.2 Models Used for Structural Analysis 3.6-3
3.6.1.4.2.3 Models Used to Represent Jet Stream Dynamics 3.6-3
3.6.1.4.3 Effect of Postulated Fluid Piping System Ruptures on Structures, Systems, or Components Necessary for Safe Reactor Operation 3.6-3
3.6.1.5 Methods to Protect Structures, Systems, or Components Necessary for Safe Reactor Operation From the Dynamic Effects of Postulated Fluid Piping System Ruptures 3.6-3
3.6.1.5.1 Pipe Whip Restraints 3.6-3
3.6.1.5.2 Protective Provisions for Structures, Systems, and Components Important to Safety 3.6-4
3.6.1.5.3 Physical Separation of Systems or Components Important to Safety 3.6-4
3.6.1.5.4 Description, Number, and Location of Pipe Whip Restraints Outside Primary Containment 3.6-4

Chapter 3

DESIGN CRITERIA - STRUCTURES, COMPONENTS, EQUIPMENT, AND SYSTEMS

TABLE OF CONTENTS (Continued)

Section — Page

3.6.1.6 Procedures to Evaluate the Structural Adequacy of Seismic Category I Structures Under Pipe Break Effects Outside Containment 3.6-5
3.6.1.6.1 General Approach 3.6-5
3.6.1.6.2 Local Damage Prediction 3.6-5
3.6.1.6.2.1 Reinforced Concrete Targets 3.6-6
3.6.1.6.2.2 Steel Targets 3.6-7
3.6.1.6.3 Overall Structural Response 3.6-8
3.6.1.6.3.1 General 3.6-8
3.6.1.6.3.2 Structural Response to Whipping Pipe Missile Impact Load 3.6-8
3.6.1.6.3.3 Jet Impingement 3.6-14
3.6.1.6.4 Allowable Design Stresses and Strains 3.6-14
3.6.1.6.4.1 Pipe Whip Loading With or Without Other Loads 3.6-14
3.6.1.6.4.2 Pipe Break Loads (Excluding Pipe Whip) With or Without Other Loads 3.6-15
3.6.1.6.5 Loads, Definition of Terms, and Nomenclature 3.6-15
3.6.1.6.6 Load Combinations 3.6-15
3.6.1.6.6.1 Seismic Category I Concrete Structures 3.6-15
3.6.1.6.6.2 Seismic Category I Steel Structures 3.6-15
3.6.1.7 Structural Design Loads 3.6-15
3.6.1.8 Analysis of Load Reversal 3.6-15
3.6.1.9 Modified Structures 3.6-16
3.6.1.10 Verification That Failure of Any Structure Does Not Preclude Safe Reactor Shutdown 3.6-16
3.6.1.11 Verification That Adequate Redundancy Exists for All Postulated Fluid Piping System Ruptures 3.6-16
3.6.1.11.1 Approach 3.6-16
3.6.1.11.2 Method of Analysis for Postulated High-Energy Fluid System Ruptures 3.6-17
3.6.1.11.2.1 Effects of Postulated Passive Component Failures 3.6-17
3.6.1.11.2.2 Analytical Procedure 3.6-17
3.6.1.11.3 Method of Analysis for Postulated Moderate-Energy Fluid System Ruptures 3.6-18
3.6.1.11.3.1 Approach 3.6-18
3.6.1.11.3.2 Method of Analysis 3.6-18
3.6.1.11.4 Summary of Analysis 3.6-18

Chapter 3

DESIGN CRITERIA - STRUCTURES, COMPONENTS, EQUIPMENT, AND SYSTEMS

TABLE OF CONTENTS (Continued)

Section — Page

3.6.1.12 Control Room Habitability 3.6-20
3.6.1.13 Electrical Equipment Environmental Qualifications 3.6-21
3.6.1.13.1 Identification of Equipment 3.6-21
3.6.1.13.2 Environmental Design 3.6-21
3.6.1.13.3 Jet Impingement Barriers 3.6-22
3.6.1.13.4 Control Room Equipment 3.6-22
3.6.1.13.5 Onsite Power Distribution System Equipment 3.6-22
3.6.1.14 Design Diagrams of Nuclear Steam Supply System Piping 3.6-22
3.6.1.15 Flooding Analysis 3.6-22
3.6.1.15.1 Postulated Rupture of the Reactor Feedwater Piping 3.6-22
3.6.1.15.1.1 Consequences 3.6-22
3.6.1.15.2 Postulated Ruptures of Reactor Water Cleanup System 3.6-23
3.6.1.15.3 Postulated Ruptures of the Auxiliary Steam, Heating Steam, Auxiliary Condensate, and Heating Steam Condensate Systems 3.6-23
3.6.1.15.4 Additional Considerations 3.6-23
3.6.1.16 Quality Control and Inspection Programs 3.6-23
3.6.1.17 Leak Detection System Capabilities 3.6-24
3.6.1.18 Emergency Procedures to Mitigate the Consequences of a Postulated Fluid Piping System Rupture Outside Primary Containment 3.6-24
3.6.1.18.1 Reactor Not Isolated 3.6-24
3.6.1.18.2 Reactor Isolated 3.6-24
3.6.1.18.2.1 Reactivity Control 3.6-24
3.6.1.18.2.2 Core Coolant Level Maintenance 3.6-24
3.6.1.18.3 Methods of Shutdown Following a Postulated Rupture of a Fluid Piping System 3.6-25
3.6.1.18.3.1 Postulated Rupture of Main Steam Piping in the Main Steam Tunnel Vicinity 3.6-25
3.6.1.18.3.2 Postulated Rupture of Reactor Feedwater Piping 3.6-25
3.6.1.18.3.3 Postulated Rupture of Reactor Core Isolation Cooling System Piping 3.6-25
3.6.1.18.3.4 Postulated Rupture of Residual Heat Removal System Piping 3.6-26
3.6.1.18.3.5 Postulated Rupture of the Control Rod Drive System Piping 3.6-26
3.6.1.18.3.6 Postulated Ruptures of the Auxiliary Steam, Heating Steam, Auxiliary Condensate, and Heating Steam Condensate Piping 3.6-26

Chapter 3

DESIGN CRITERIA - STRUCTURES, COMPONENTS, EQUIPMENT, AND SYSTEMS

TABLE OF CONTENTS (Continued)

Section — Page

3.6.1.18.3.7 Postulated Rupture of the Reactor Water Cleanup System Piping 3.6-26
3.6.1.19 Seismic and Quality Classifications of Piping Used in the Dynamic Analysis 3.6-26
3.6.1.20 Method Used to Predict Blowdown Rates and Subcompartment Pressure Transient After a Postulated Pipe Break 3.6-27
3.6.1.20.1 Blowdown Analysis for a Postulated Pipe Break Outside the Primary Containment 3.6-27
3.6.1.20.1.1 Method of Analysis for a Postulated Pipe Break in Larger Pipes 3.6-27
3.6.1.20.1.2 Method of Analysis for a Postulated Pipe Break in Smaller Pipes 3.6-27
3.6.1.20.1.3 Blowdown Mass and Energy Release Rates for a Postulated Pipe Break in the Main Steam Line and the Reactor Feedwater Line in the Main Steam Tunnel 3.6-27
3.6.1.20.2 Subcompartment Analysis for Postulated Pipe Break Outside the Primary Containment Excluding the Main Steam Tunnel, Ventway, and Tunnel Extension 3.6-27
3.6.1.20.2.1 Method of Analysis 3.6-27
3.6.1.20.2.2 Initial Atmospheric Conditions 3.6-28
3.6.1.20.2.3 Vent Flow 3.6-29
3.6.1.20.2.4 Results of Subcompartment Analyses 3.6-29
3.6.1.20.2.5 Verification of Structural Adequacy 3.6-29
3.6.1.20.3 Subcompartment Analysis for a Postulated Pipe Break in the Main Steam Tunnel 3.6-29
3.6.1.20.3.1 General Approaches 3.6-29
3.6.1.20.3.2 Description of the Main Steam Tunnel, Ventway, and Tunnel Extension 3.6-29
3.6.1.20.3.3 Analysis for a Postulated Pipe Break in the Main Steam Tunnel 3.6-30
3.6.1.20.3.4 Analysis for a Postulated Pipe Break in the Tunnel Extension 3.6-32
3.6.1.20.3.5 Verification of Structural Adequacy 3.6-33
3.6.1.20.3.6 Turbine Building Consequences of a Postulated Pipe Break in the Steam Tunnel Extension 3.6-33
3.6.1.21 Description of Methods of Analyses to Ensure That Primary or Secondary Containment Integrity Is Not Compromised by a Postulated Passive Component Failure 3.6-34

Chapter 3

DESIGN CRITERIA - STRUCTURES, COMPONENTS, EQUIPMENT, AND SYSTEMS

TABLE OF CONTENTS (Continued)

Section — Page

3.6.2 DETERMINATION OF BREAK LOCATIONS FOR DYNAMIC EFFECTS ASSOCIATED WITH THE POSTULATED RUPTURE OF PIPING 3.6-34
3.6.2.1 Criteria Used to Define Break and Crack Location and Configuration 3.6-34
3.6.2.1.1 Postulated Pipe Break Locations in High-Energy Fluid System Piping Not in the Containment Penetration Area 3.6-36
3.6.2.1.1.1 Postulated Pipe Break Locations in ASME Section III Class I Piping Runs 3.6-36
3.6.2.1.1.2 Postulated Pipe Break Locations in ASME Section III Class 2 and 3 Piping Runs 3.6-37
3.6.2.1.1.3 Break Locations in Other Piping Runs 3.6-37
3.6.2.1.2 Postulated Pipe Break Locations in High-Energy Fluid System Piping Between Primary Containment Isolation Valves 3.6-38
3.6.2.1.2.1 Postulated Pipe Break Locations in ASME Section III Class 1 Piping Between Primary Containment Isolation Valves 3.6-38
3.6.2.1.2.2 Postulated Pipe Break Locations in ASME Section III Class 2 and 3 Piping Between Primary Containment Isolation Valves 3.6-38
3.6.2.1.2.3 Primary Containment Penetration Piping 3.6-39
3.6.2.1.3 Postulated Through Wall Leakage Crack Locations in High- and Moderate-Energy Fluid Systems 3.6-39
3.6.2.1.4 Types of Breaks and Cracks Postulated in High-Energy and Moderate-Energy Fluid System Piping 3.6-40
3.6.2.1.4.1 Breaks in High-Energy Fluid System Piping 3.6-40
3.6.2.1.4.2 Cracks in High-Energy and Moderate-Energy Fluid System Piping 3.6-41
3.6.2.1.5 Protection Criteria for the Effects of Pipe Break 3.6-42
3.6.2.2 Analytic Methods to Define Blowdown Forcing Functions and Response Models 3.6-42
3.6.2.2.1 Analytical Methods to Define Blowdown Forcing Functions 3.6-42
3.6.2.2.2 Analytical Methods to Define Response Models 3.6-45
3.6.2.2.2.1 General Description of Analytical Methods 3.6-45
3.6.2.2.2.2 Dynamic Analysis of the Effects of Pipe Rupture 3.6-45
3.6.2.2.3 Material Properties Under Dynamic Loads 3.6-49
3.6.2.2.3.1 Dynamic Yield Strength 3.6-49
3.6.2.2.3.2 Maximum Strain of Tension Members 3.6-49
3.6.2.2.3.3 Maximum Deformation of Flexural Members 3.6-50

Chapter 3

DESIGN CRITERIA - STRUCTURES, COMPONENTS, EQUIPMENT, AND SYSTEMS

TABLE OF CONTENTS (Continued)

Section — Page

3.6.2.2.3.4 Materials and Proportions of Structural Shapes 3.6-50
3.6.2.3 Dynamic Analysis Methods to Verify Integrity and Operability 3.6-50
3.6.2.3.1 Dynamic Analysis Methods for Jet Impingement Effects 3.6-50
3.6.2.3.2 Jet Impingement Effect 3.6-54
3.6.2.3.2.1 Physical Separation 3.6-54
3.6.2.3.2.2 Jet Impingement Evaluation 3.6-54
3.6.2.3.2.3 Postulated Pipe Rupture Locations Inside Containment 3.6-54
3.6.2.3.2.4 Signals From Primary Containment 3.6-55
3.6.2.3.2.5 Signals to the Primary Containment 3.6-55
3.6.2.3.2.6 Power Requirement Inside Primary Containment 3.6-55
3.6.2.3.2.7 Mechanical Engineered Safety Systems 3.6-56
3.6.2.3.2.8 Jet Impingement on Major Structures Inside Primary Containment 3.6-56
3.6.2.3.3 Pipe Whip Restraints 3.6-56
3.6.2.3.3.1 Definition of Function 3.6-56
3.6.2.3.3.2 Pipe Whip Restraint Features 3.6-57
3.6.2.3.3.3 Pipe Whip Restraint Loading 3.6-58
3.6.2.3.4 Pipe Whip Effects on Safety-Related Components 3.6-59
3.6.2.3.4.1 Pipe Displacement Effects on Components in Same Piping Run 3.6-59
3.6.2.3.4.2 Pipe Displacement Effects on Structures, Other Systems, and Components 3.6-60
3.6.2.4 Guard Pipe Assembly Design Criteria for Dual Barrier Containment 3.6-60
3.6.2.5 Implementation of Criteria for Pipe Whip and Jet Impingement Protection 3.6-61
3.6.2.5.1 Piping Systems Outside Primary Containment 3.6-61
3.6.2.5.2 Piping Systems Inside Primary Containment 3.6-61
3.6.2.5.3 System Requirements Subsequent to Postulated Pipe Rupture 3.6-62
3.6.2.5.3.1 Control Rod Insertion Capability 3.6-62
3.6.2.5.3.2 Core Cooling Requirements 3.6-62
3.6.2.5.3.3 Maximum Allowable Break Areas 3.6-62
3.6.2.5.3.4 Break Combinations 3.6-62
3.6.2.5.3.5 Required Cooling Systems 3.6-62
3.6.2.5.3.6 Containment System Integrity 3.6-63
3.6.2.5.4 System by System Description of Pipe Whip Protection 3.6-63
3.6.2.5.4.1 Main Steam System 3.6-63
3.6.2.5.4.2 Reactor Feedwater System (Inside Primary Containment) 3.6-64

Chapter 3

DESIGN CRITERIA - STRUCTURES, COMPONENTS, EQUIPMENT, AND SYSTEMS

TABLE OF CONTENTS (Continued)

Section — Page

3.6.2.5.4.3 Reactor Water Cleanup System 3.6-65
3.6.2.5.4.4 Standby Liquid Control Piping 3.6-66
3.6.2.5.4.5 Residual Heat Removal System - Shutdown Cooling Supply and Return Piping 3.6-66
3.6.2.5.4.6 Reactor Core Isolation Cooling Reactor Pressure Vessel Head Spray System 3.6-67
3.6.2.5.4.7 Low-Pressure and High-Pressure Core Spray Piping 3.6-68
3.6.2.5.4.8 Residual Heat Removal Condensing Mode and Reactor Core Isolation Cooling Turbine Steam Supply System 3.6-68
3.6.2.5.4.9 Main Steam Valve Drainage Piping 3.6-69
3.6.2.5.4.10 Main Steam Reactor Pressure Vessel Head Vent System 3.6-70
3.6.2.5.4.11 Main Steam and Reactor Feedwater Piping Inside Main Steam Tunnel 3.6-71
3.6.2.5.4.12 Residual Heat Removal System - Low Pressure Core Injection 3.6-71
3.6.2.5.4.13 Reactor Pressure Vessel Drain System 3.6-72
3.6.2.5.4.14 Reactor Recirculation Cooling System 3.6-73
3.6.3 REFERENCES 3.6-74

3.7 SEISMIC DESIGN 3.7-1
3.7.1 SEISMIC INPUT 3.7-1
3.7.1.1 Design Response Spectra 3.7-1
3.7.1.2 Design Time History 3.7-2
3.7.1.3 Critical Damping Values 3.7-4
3.7.1.4 Supporting Media for Seismic Category I Structures 3.7-4
3.7.2 SEISMIC SYSTEM ANALYSIS 3.7-4
3.7.2.1 Seismic Analysis Methods 3.7-5
3.7.2.1.1 Introduction 3.7-5
3.7.2.1.2 The Equations of Dynamic Equilibrium 3.7-5
3.7.2.1.3 Solution of the Equations of Dynamic Equilibrium by Direct Integration 3.7-6
3.7.2.1.4 Solution of the Equations of Dynamic Equilibrium by Mode-Superposition 3.7-6
3.7.2.1.5 Response Spectrum Method of Analysis 3.7-7
3.7.2.1.5.1 Combination of Modal Response 3.7-8
3.7.2.1.5.1.1 Square Root-of-the-Sum-of-the-Squares Method 3.7-8

Chapter 3

DESIGN CRITERIA - STRUCTURES, COMPONENTS, EQUIPMENT, AND SYSTEMS

TABLE OF CONTENTS (Continued)

Section — Page

3.7.2.1.5.1.2 Double Sum Method *3.7-8*
3.7.2.1.6 Time-History Method of Analysis 3.7-9
3.7.2.1.7 Analysis for Differential Support Displacements 3.7-10
3.7.2.1.8 Dynamic Analysis of Seismic Category I Structures, Systems, and Components 3.7-11
3.7.2.1.8.1 Dynamic Analysis of Buildings 3.7-11
3.7.2.1.8.2 Dynamic Analysis of Piping Systems 3.7-11
3.7.2.1.8.3 Dynamic Analysis of Equipment 3.7-12
3.7.2.1.8.3.1 Differential Seismic Movement of Interconnected Components 3.7-13
3.7.2.1.9 Equivalent Static Load Method 3.7-14
3.7.2.1.10 Dynamic Testing 3.7-14
3.7.2.2 Natural Frequencies and Response Loads 3.7-15
3.7.2.3 Procedure Used for Modeling 3.7-16
3.7.2.3.1 Modeling of Structures 3.7-18
3.7.2.3.2 Modeling of Piping Systems 3.7-18
3.7.2.3.3 Modeling of Equipment 3.7-19
3.7.2.3.4 Modeling of Reactor Pressure Vessel and Internals 3.7-19
3.7.2.4 Soil/Structure Interaction 3.7-20
3.7.2.5 Development of Floor Response Spectra 3.7-21
3.7.2.6 Three Components of Earthquake Motion 3.7-22
3.7.2.7 Combination of Modal Responses 3.7-23
3.7.2.8 Interaction of Non-Category I Structures With Seismic Category I Structures 3.7-23
3.7.2.9 Effects of Parameter Variations on Floor Response Spectra 3.7-23
3.7.2.10 Use of Constant Vertical Static Factors 3.7-24
3.7.2.11 Method Used to Account for Torsional Effects 3.7-24
3.7.2.12 Comparison of Responses 3.7-24
3.7.2.13 Methods for Seismic Analysis of Dams 3.7-25
3.7.2.14 Determination of Seismic Category I Structure Overturning Moments 3.7-25
3.7.2.15 Analysis Procedure for Damping 3.7-26
3.7.3 SEISMIC SUBSYSTEM ANALYSIS 3.7-29
3.7.3.1 Seismic Analysis Methods 3.7-29
3.7.3.2 Determination of Number of Earthquake Cycles 3.7-29
3.7.3.2.1 Number of Cycles for All Items Except Nuclear Steam Supply System Systems and Components 3.7-29

Chapter 3

DESIGN CRITERIA - STRUCTURES, COMPONENTS, EQUIPMENT, AND SYSTEMS

TABLE OF CONTENTS (Continued)

Section — Page

3.7.3.2.2 Number of Cycles for Nuclear Steam Supply System Systems and Components 3.7-29
3.7.3.2.2.1 Nuclear Steam Supply System Piping 3.7-29
3.7.3.2.2.2 Other Nuclear Steam Supply System Equipment and Components 3.7-29
3.7.3.3 Procedure Used for Modeling 3.7-30
3.7.3.4 Basis for Selection of Frequencies 3.7-31
3.7.3.5 Use of Equivalent Static Load Method of Analysis 3.7-31
3.7.3.6 Three Components of Earthquake Motion 3.7-31
3.7.3.7 Procedure for Combining Modal Responses 3.7-32
3.7.3.8 Analytical Procedures for Piping 3.7-32
3.7.3.9 Equipment Components Supported at Multiple Locations with Distinct Inputs 3.7-32
3.7.3.10 Use of Constant Vertical Static Factors 3.7-32
3.7.3.11 Torsional Effects of Eccentric Masses 3.7-32
3.7.3.12 Buried Seismic Category I Piping Systems and Tunnels 3.7-33
3.7.3.12.1 Procedures for Predicting the Stresses of Buried Pipes in the Free Field 3.7-33
3.7.3.12.1.1 Method of Analysis 3.7-33
3.7.3.12.1.2 Axial Stresses in Pipe 3.7-33
3.7.3.12.1.3 Bending Stresses in Pipes 3.7-33
3.7.3.12.1.4 Buried Piping Encased in Oversized Culvert Sections 3.7-33
3.7.3.12.2 Procedures for Predicting the Stresses of Buried Pipes at Connections to Various Buildings 3.7-34
3.7.3.13 Interaction of Other Piping With Seismic Category I Piping 3.7-34
3.7.3.14 Seismic Analyses for Reactor Internals 3.7-34
3.7.3.15 Analysis Procedure for Damping 3.7-34
3.7.4 SEISMIC INSTRUMENTATION 3.7-34
3.7.4.1 Comparison With Regulatory Guide 1.12 ..... 3.7-34
3.7.4.2 Location and Description of Instrumentation 3.7-34
3.7.4.3 Control Room Operator Notification 3.7-36
3.7.4.4 Comparison of Measured and Predicted Responses 3.7-36
3.7.5 REFERENCES 3.7-37

3.8 DESIGN OF SEISMIC CATEGORY I STRUCTURES 3.8-1
3.8.1 CONCRETE CONTAINMENT VESSEL (Not Applicable to CGS) 3.8-2

Chapter 3

DESIGN CRITERIA - STRUCTURES, COMPONENTS, EQUIPMENT, AND SYSTEMS

TABLE OF CONTENTS (Continued)

Section — Page

3.8.2 STEEL CONTAINMENT VESSEL (ASME Class MC Components) 3.8-2
3.8.2.1 Description of the Primary Containment Vessel 3.8-3
3.8.2.1.1 Description of Penetrations 3.8-10
3.8.2.1.1.1 Pipe Penetrations 3.8-10
3.8.2.1.1.2 Electrical Penetrations 3.8-10
3.8.2.1.1.3 Traversing In-Core Probe Penetrations 3.8-11
3.8.2.1.1.4 Personnel Access Lock and the (Combined) Equipment Hatch and Control Rod Drive Removal Hatch 3.8-11
3.8.2.1.1.5 Pressure Suppression Chamber Access Hatch 3.8-12
3.8.2.1.1.6 Access for Refueling Operations 3.8-12
3.8.2.1.2 Description of Crane Girder (Not Applicable to CGS) 3.8-12
3.8.2.1.3 Description of Vacuum Relief System 3.8-12
3.8.2.1.4 Containment Pressure Boundaries 3.8-14
3.8.2.1.5 Primary Containment Environmental Conditions 3.8-14
3.8.2.2 Applicable Codes, Standards, Specifications, and Regulatory Guides 3.8-15
3.8.2.2.1 Codes, Standards, and Specifications 3.8-15
3.8.2.2.2 Code Classification 3.8-15
3.8.2.2.3 Code Compliance 3.8-16
3.8.2.2.3.1 Containment Vessel 3.8-16
3.8.2.2.3.2 Code Stamp 3.8-16
3.8.2.2.3.3 Exceptions 3.8-16
3.8.2.2.3.4 Attachments 3.8-16
3.8.2.2.4 Regulatory Guides 3.8-16
3.8.2.3 Loads and Loading Combinations 3.8-17
3.8.2.3.1 Design Pressures and Temperatures 3.8-17
3.8.2.3.2 Operating Pressure and Temperature 3.8-18
3.8.2.3.3 Dead Loads 3.8-19
3.8.2.3.4 Live Loads 3.8-20
3.8.2.3.5 Mechanical Piping Loads 3.8-20
3.8.2.3.5.1 Jet Forces in Drywell 3.8-21
3.8.2.3.5.2 Vent Pipe (Downcomer) Thrusts 3.8-21
3.8.2.3.5.3 Pipe Whip 3.8-22
3.8.2.3.6 Thermal Loads 3.8-22
3.8.2.3.7 Construction Loads 3.8-22
3.8.2.3.8 Missile Loads 3.8-22

Chapter 3

DESIGN CRITERIA - STRUCTURES, COMPONENTS, EQUIPMENT, AND SYSTEMS

TABLE OF CONTENTS (Continued)

Section — Page

3.8.2.3.9 Loss-of-Coolant Accident Loads 3.8-22
3.8.2.3.10 Accident Recovery Loads 3.8-23
3.8.2.3.11 Seismic Loads 3.8-23
3.8.2.3.12 Loading Combinations 3.8-23
3.8.2.4 Design and Analysis Procedure 3.8-29
3.8.2.4.1 Description 3.8-30
3.8.2.4.1.1 Bottom Ellipsoidal Head and Bell-Jar Shaped Shell 3.8-30
3.8.2.4.1.2 Steel Containment Vessel Embedment Region 3.8-31
3.8.2.4.1.3 Penetrations 3.8-31
3.8.2.4.1.4 Personnel Access Lock and the (Combined) Equipment Hatch and Control Rod Drive Removal Hatch 3.8-32
3.8.2.4.2 Computer Programs Utilized in Design and Analysis 3.8-33
3.8.2.4.3 Seismic Analysis 3.8-34
3.8.2.4.3.1 Computer Program Utilized in the Seismic Dynamic Analysis 3.8-36
3.8.2.4.3.2 Seismic Dynamic Analysis of Water in Suppression Chamber (Sloshing Effects) 3.8-36
3.8.2.4.4 Protective Coatings 3.8-37
3.8.2.5 Structural Acceptance Criteria 3.8-37
3.8.2.5.1 Primary Stresses 3.8.37
3.8.2.5.2 Primary and Secondary Stresses 3.8-38
3.8.2.5.3 Peak Stresses 3.8-38
3.8.2.5.4 Buckling Criteria for the Primary Containment Vessel 3.8-38
3.8.2.6 Materials, Quality Control, and Special Construction Techniques 3.8-39
3.8.2.6.1 Materials 3.8-39
3.8.2.6.2 Quality Control 3.8-42
3.8.2.6.3 Special Construction Techniques 3.8-44
3.8.2.7 Testing and Inservice Inspection Requirements 3.8-44
3.8.2.7.1 Inspection of Material and Parts for Fabrication 3.8-44
3.8.2.7.2 Testing of Primary Containment Vessel During Field Erection 3.8-45
3.8.2.7.3 Testing of the Erected Primary Containment Vessel 3.8-45
3.8.2.7.4 Tests on Electrical and Mechanical Penetrations 3.8-48
3.8.2.7.5 Tests on Personnel Access Lock 3.8-48
3.8.2.7.6 Tests on Penetration Field Welds 3.8-50
3.8.2.7.7 Preoperational Leakage Rate Test and Periodic Leakage Rate Tests 3.8-50
3.8.2.7.8 Examination of Coatings on Immersed Surfaces 3.8-51

Chapter 3

DESIGN CRITERIA - STRUCTURES, COMPONENTS, EQUIPMENT, AND SYSTEMS

TABLE OF CONTENTS (Continued)

Section — Page

3.8.3 CONCRETE AND STEEL INTERNAL STRUCTURES OF STEEL CONTAINMENT 3.8-51
3.8.3.1 Description of Internal Structures 3.8-51
3.8.3.1.1 Reactor Pedestal 3.8-52
3.8.3.1.2 Sacrificial Shield Wall 3.8-53
3.8.3.1.3 Drywell Floor Structural System and Support Elements 3.8-53
3.8.3.1.4 Radial Beam Framing Systems 3.8-55
3.8.3.1.5 Stabilizer Truss 3.8-56
3.8.3.1.6 Refueling Bellows Seals 3.8-57
3.8.3.1.7 Reactor Steam Supply System Hangers and Supports 3.8-57
3.8.3.1.8 Reinforced-Concrete Lining Inside the Bottom Head of the Primary Containment Vessel 3.8-57
3.8.3.2 Applicable Codes, Standards, Specifications, and Regulatory Guides 3.8-57
3.8.3.2.1 Reactor Pedestal 3.8-58
3.8.3.2.2 Sacrificial Shield Wall 3.8-58
3.8.3.2.3 Drywell Floor Structural System and Support Elements 3.8-58
3.8.3.2.3.1 Reinforced-Concrete Slab 3.8-58
3.8.3.2.3.2 Reinforced-Concrete Columns 3.8-59
3.8.3.2.3.3 Reinforced-Concrete Reactor Pedestal 3.8-59
3.8.3.2.3.4 Circular Closure Girder 3.8-59
3.8.3.2.3.5 Drywell Floor Peripheral Seal 3.8-59
3.8.3.2.3.6 Peripheral Seal Jet Deflectors 3.8-59
3.8.3.2.3.7 Shear Lugs 3.8-59
3.8.3.2.3.8 Downcomers 3.8-59
3.8.3.2.3.9 Downcomer Jet Deflectors 3.8-59
3.8.3.2.4 Radial Beam Framing Systems 3.8-60
3.8.3.2.5 Stabilizer Truss 3.8-60
3.8.3.2.6 Refueling Bellows Seals 3.8-60
3.8.3.2.7 Reactor Steam Supply System Hangers and Supports 3.8-60
3.8.3.2.8 Reinforced-Concrete Lining Inside Bottom Head of Primary Containment Vessel 3.8-60
3.8.3.3 Loads and Load Combinations 3.8-60
3.8.3.3.1 Load Conditions 3.8-61
3.8.3.3.2 Load Categories 3.8-61
3.8.3.3.3 Load Definitions 3.8-63

Chapter 3

DESIGN CRITERIA - STRUCTURES, COMPONENTS, EQUIPMENT, AND SYSTEMS

TABLE OF CONTENTS (Continued)

Section — Page

3.8.3.3.4 Internal Structures in the Suppression Chamber ... 3.8-66
3.8.3.3.5 Internal Structures in the Drywell ... 3.8-68
3.8.3.4 Design and Analysis Procedures ... 3.8-69
3.8.3.4.1 Reactor Pedestal ... 3.8-69
3.8.3.4.2 Sacrificial Shield Wall ... 3.8-70
3.8.3.4.3 Drywell Floor Structural System and Support Elements, Including the Peripheral Seal Assembly, Peripheral Seal Jet Deflectors, and Peripheral Shear Lugs ... 3.8-70
3.8.3.4.3.1 Drywell Floor Slab and Columns ... 3.8-70
3.8.3.4.3.2 Structural Steel Members ... 3.8-71
3.8.3.4.3.3 Drywell Floor Peripheral Seal Assembly ... 3.8-71
3.8.3.4.3.4 Drywell Floor Peripheral Shear Lugs ... 3.8-72
3.8.3.4.4 Radial Beam Framing Systems ... 3.8-73
3.8.3.4.5 Stabilizer Truss ... 3.8-73
3.8.3.4.6 Refueling Bellows Seals ... 3.8-73
3.8.3.4.7 Reactor Steam Supply System Hangers and Supports ... 3.8-74
3.8.3.4.8 Reinforced-Concrete Lining Inside Bottom Head of Primary Containment Vessel ... 3.8-74
3.8.3.4.9 Downcomer Vent Pipes ... 3.8-74
3.8.3.5 Structural Acceptance Criteria ... 3.8-75
3.8.3.5.1 Reinforced Concrete ... 3.8-75
3.8.3.5.2 Structural Steel ... 3.8-75
3.8.3.6 Materials, Quality Control and Special Construction Techniques ... 3.8-76
3.8.3.7 Testing and Inservice Surveillance Programs ... 3.8-76
3.8.4 OTHER SEISMIC CATEGORY I STRUCTURES ... 3.8-77
3.8.4.1 Description of Structures ... 3.8-77
3.8.4.1.1 Reactor Building ... 3.8-78
3.8.4.1.1.1 Basic Structure ... 3.8-80
3.8.4.1.1.2 Personnel and Equipment Access ... 3.8-81
3.8.4.1.1.3 Biological Shield Wall ... 3.8-82
3.8.4.1.1.4 Main Steam Tunnel, Ventway, and Tunnel Extension ... 3.8-83
3.8.4.1.1.5 Operating Floor, Steel Superstructure, and Overhead Bridge Crane ... 3.8-84
3.8.4.1.1.6 Refueling Pools ... 3.8-85
3.8.4.1.2 Radwaste and Control Building ... 3.8-86
3.8.4.1.3 Turbine Generator Building ... 3.8-88

Chapter 3

DESIGN CRITERIA - STRUCTURES, COMPONENTS, EQUIPMENT, AND SYSTEMS

TABLE OF CONTENTS (Continued)

Section — Page

3.8.4.1.4 Diesel Generator Building 3.8-88
3.8.4.1.5 Spray Ponds and Standby Service Water Pump Houses 3.8-89
3.8.4.1.6 Makeup Water Pump House 3.8-91
3.8.4.1.7 Condensate Storage Tanks Retaining Area 3.8-93
3.8.4.1.8 Fresh Air Intake Structures 1 and 2 ..... 3.8-94
3.8.4.2 Applicable Codes, Standards, Specifications, and Regulatory Guides 3.8-95
3.8.4.3 Loads and Load Combinations 3.8-96
3.8.4.3.1 Load Conditions 3.8-96
3.8.4.3.2 Load Categories 3.8-96
3.8.4.3.3 Load Definitions 3.8-98
3.8.4.4 Design and Analysis Procedures 3.8-103
3.8.4.4.1 Reactor Building 3.8-104
3.8.4.4.1.1 Biological Shield Wall 3.8-105
3.8.4.5 Structural Acceptance Criteria 3.8-108
3.8.4.5.1 Reinforced Concrete 3.8-108
3.8.4.5.2 Structural Steel 3.8-108
3.8.4.6 Materials, Quality Control, and Special Construction Techniques 3.8-109
3.8.4.7 Testing and Inservice Surveillance Requirements 3.8-109
3.8.5 FOUNDATIONS 3.8-109
3.8.5.1 Descriptions of Foundations 3.8-109
3.8.5.1.1 Reactor Building 3.8-110
3.8.5.1.2 Radwaste and Control Building 3.8-110
3.8.5.1.3 Diesel Generator Building 3.8-110
3.8.5.1.4 Standby Service Water Pump House and Spray Pond 3.8-111
3.8.5.1.5 Condensate Storage Tank Retaining Area 3.8-111
3.8.5.1.6 Turbine Generator Building 3.8-112
3.8.5.1.7 Non-Seismic Category I Safety-Related Foundations 3.8-112
3.8.5.2 Applicable Codes, Standards, and Specifications 3.8-112
3.8.5.3 Loads and Loading Combinations 3.8-113
3.8.5.4 Design and Analysis Procedures 3.8-113
3.8.5.4.1 General 3.8-113
3.8.5.4.2 Reactor Building Foundation Mat 3.8-113
3.8.5.4.3 Radwaste and Control Building 3.8-113
3.8.5.4.4 Diesel Generator Building 3.8-114

Chapter 3

DESIGN CRITERIA - STRUCTURES, COMPONENTS, EQUIPMENT, AND SYSTEMS

TABLE OF CONTENTS (Continued)

Section — Page

3.8.5.4.5 Standby Service Water Pump Houses, Spray Ponds, and Condensate Storage Tank Retaining Area 3.8-114
3.8.5.4.6 Turbine Generator Building 3.8-114
3.8.5.4.7 Makeup Water Pump House 3.8-115
3.8.5.5 Structural Acceptance Criteria 3.8-115
3.8.5.6 Materials, Quality Control, and Special Construction Techniques 3.8-116
3.8.5.7 Testing and Inservice Surveillance Techniques 3.8-116
3.8.6 PIPING AND ELECTRICAL PENETRATIONS 3.8-116
3.8.6.1 Description 3.8-117
3.8.6.1.1 Piping Penetrations - Type 1 ..... 3.8-117
3.8.6.1.2 Piping Penetrations - Type 2 ..... 3.8-119
3.8.6.1.3 Piping Penetrations - Type 3 ..... 3.8-119
3.8.6.1.4 Electrical Penetrations - Type 4 ..... 3.8-120
3.8.6.1.4.1 Configuration 3.8-121
3.8.6.1.4.2 Ampacity 3.8-124
3.8.6.1.4.3 Auxiliary Hardware 3.8-124
3.8.6.1.4.4 Shop Painting of Electrical Penetrations 3.8-125
3.8.6.1.5 Instrumentation Piping Penetrations - Type 5, 6, and 7 ..... 3.8-125
3.8.6.2 Applicable Codes, Standards, Specifications, and Regulatory Guides 3.8-125
3.8.6.2.1 Codes, Standards, and Specifications 3.8-125
3.8.6.2.2 Conformance with Regulatory Guides 3.8-128
3.8.6.3 Loads and Loading Combinations 3.8-128
3.8.6.3.1 Loads 3.8-128
3.8.6.3.2 Loading Combinations 3.8-128
3.8.6.4 Design and Analysis Procedures 3.8-129
3.8.6.4.1 Piping Penetrations 3.8-129
3.8.6.4.2 Flued Head Fitting Design 3.8-129
3.8.6.4.3 Thermal Stress Analysis for Flued Head Fittings 3.8-130
3.8.6.4.4 Primary Containment Vessel Design at Penetration Nozzle Interface 3.8-130
3.8.6.4.5 Electrical Penetrations 3.8-132
3.8.6.4.6 Protective Coatings 3.8-133
3.8.6.5 Structural Acceptance Criteria 3.8-133
3.8.6.5.1 Type I Piping Penetrations 3.8-133
3.8.6.5.2 Types 2 and 3 Piping Penetrations 3.8-133

Chapter 3

DESIGN CRITERIA - STRUCTURES, COMPONENTS, EQUIPMENT, AND SYSTEMS

TABLE OF CONTENTS (Continued)

Section — Page

3.8.6.5.3 Type 4 Electrical Penetrations and Type 5, 6, and 7 Instrumentation Penetrations 3.8-133
3.8.6.5.4 Allowable Stresses for Piping, Electrical, and Instrumentation Penetrations 3.8-133
3.8.6.5.4.1 Electromagnetic Conditions 3.8-134
3.8.6.6 Materials, Quality Control, and Special Construction Techniques 3.8-135
3.8.6.6.1 Materials 3.8-135
3.8.6.6.2 Quality Control 3.8-135
3.8.6.6.3 Special Construction Techniques 3.8-136
3.8.6.7 Testing and Inservice Inspection Requirements 3.8-136
3.8.6.7.1 Inspection of Material and Parts for Fabrication 3.8-136
3.8.6.7.2 Shop Hydrostatic Testing 3.8-136
3.8.6.7.3 Shop Tests on Electrical Penetration Assemblies 3.8-136
3.8.6.7.4 Field Tests on Electrical Penetration Assemblies 3.8-139
3.8.6.7.5 Testing of Penetrations After Erected 3.8-139
3.8.6.7.6 Tests on Penetration Field Welds 3.8-139
3.8.6.7.7 Preoperational Leakage Rate Tests and Periodic Leakage Rate Tests 3.8-139
3.8.7 REFERENCES 3.8-140

3.9 MECHANICAL SYSTEMS AND COMPONENTS 3.9-1
3.9.1 SPECIAL TOPICS FOR MECHANICAL COMPONENTS 3.9-1
3.9.1.1 Design Transients 3.9-1
3.9.1.1.1 Control Rod Drive Transients 3.9-1
3.9.1.1.2 Control Rod Drive Housing and In-Core Housing Transients 3.9-2
3.9.1.1.3 Hydraulic Control Unit Transients 3.9-3
3.9.1.1.4 Core Support and Reactor Internals Transients 3.9-3
3.9.1.1.5 Nuclear Steam Supply System Scope Main Steam System Transients 3.9-3
3.9.1.1.6 Recirculation System Transients 3.9-4
3.9.1.1.7 Reactor Assembly Transients 3.9-5
3.9.1.1.8 Main Steam Isolation Valve Transients 3.9-5
3.9.1.1.9 Main Steam Safety/Relief Valve Transients 3.9-7
3.9.1.1.10 Recirculation Flow Control Valve Transients 3.9-8
3.9.1.1.11 Recirculation Pump Transients 3.9-9
3.9.1.1.12 Recirculation Gate Valve Transients 3.9-10
3.9.1.1.13 Balance-of-Plant Transients 3.9-11

Chapter 3

DESIGN CRITERIA - STRUCTURES, COMPONENTS, EQUIPMENT, AND SYSTEMS

TABLE OF CONTENTS (Continued)

Section — Page

3.9.1.2 Nuclear Steam Supply System Computer Programs Used in Original Analysis 3.9-11
3.9.1.2.1 Reactor Pressure Vessel and Internals 3.9-12
3.9.1.2.1.1 Reactor Pressure Vessel 3.9-12
3.9.1.2.1.1.1 CB&I Program 7-11 - "GENOZZ" 3.9-12
3.9.1.2.1.1.2 CB&I Program 9-48 - "NAPALM" 3.9-13
3.9.1.2.1.1.3 CB&I Program 1027 ..... 3.9-13
3.9.1.2.1.1.4 CB&I Program 846 ..... 3.9-13
3.9.1.2.1.1.5 CB&I Program 781 - "KALNINS" 3.9-13
3.9.1.2.1.1.6 CB&I Program 979 - "ASFAST" 3.9-14
3.9.1.2.1.1.7 CB&I Program 766 - "TEMAPR" 3.9-14
3.9.1.2.1.1.8 CB&I Program 767 - "PRINCESS" 3.9-14
3.9.1.2.1.1.9 CB&I Program 928 - "TGRV" 3.9-14
3.9.1.2.1.1.10 CB&I Program 962 - "E0962A" 3.9-14
3.9.1.2.1.1.11 CB&I Program 984 ..... 3.9-15
3.9.1.2.1.1.12 CB&I Program 992 - "GASP" 3.9-15
3.9.1.2.1.1.13 CB&I Program 1037 - "DUNHAM'S" 3.9-15
3.9.1.2.1.1.14 CB&I Program 1335 ..... 3.9-16
3.9.1.2.1.1.15 CB&I Programs 1606 and 1657 - "HAP" 3.9-16
3.9.1.2.1.1.16 CB&I Program 1635 ..... 3.9-16
3.9.1.2.1.1.17 CB&I Program 953 ..... 3.9-16
3.9.1.2.1.1.18 CB&I Program 955 - "MESHPLOT" 3.9-16
3.9.1.2.1.1.19 CB&I Program 1028 ..... 3.9-17
3.9.1.2.1.1.20 CB&I Program 1038 ..... 3.9-17
3.9.1.2.1.2 Reactor Internals 3.9-17
3.9.1.2.2 Nuclear Steam Supply System Piping 3.9-17
3.9.1.2.2.1 Piping Analysis Program/PISYS 3.9-17
3.9.1.2.2.2 Component Analysis/ANSI7 ..... 3.9-17
3.9.1.2.2.3 Relief Valve Discharge Pipe Forces Computer Program/RVFOR 3.9-17
3.9.1.2.2.4 Turbine Stop Valve Closure/TSFOR 3.9-18
3.9.1.2.2.5 Integral Attachment/LUGST 3.9-18
3.9.1.2.2.6 Piping Dynamic Analysis Program/PDA 3.9-18
3.9.1.2.3 Recirculation Pump 3.9-18
3.9.1.2.4 Emergency Core Cooling System Pumps and Motors 3.9-18
3.9.1.2.4.1 Rotor Assembly Analysis Program/RTRMEC 3.9-18

Chapter 3

DESIGN CRITERIA - STRUCTURES, COMPONENTS, EQUIPMENT, AND SYSTEMS

TABLE OF CONTENTS (Continued)

Section — Page

3.9.1.2.4.2 Structural Analysis Program/SAP4G *3.9-19*
3.9.1.2.4.3 Effects of Flange Joint Connections/FTFLG01 ..... *3.9-19*
3.9.1.2.4.4 Structural Analysis of Discharge Head/ANSYS *3.9-19*
3.9.1.2.4.5 Beam Element Data Processing/POSUM *3.9-19*
3.9.1.2.5 Residual Heat Removal Heat Exchangers *3.9-19*
3.9.1.2.5.1 Structural Analysis Program/SAP4G *3.9-19*
3.9.1.2.5.2 Local Stiffness Calculations/BSTIF01 ..... *3.9-19*
3.9.1.2.5.3 Calculation of Shell Attachment Parameters and Coefficients/BILRD *3.9-20*
3.9.1.2.5.4 Beam Element Data Processing/POSUM *3.9-20*
3.9.1.2.6 Dynamic Loads Analysis *3.9-20*
3.9.1.2.6.1 Dynamic Analysis Program/DYSEA *3.9-20*
3.9.1.2.6.2 Acceleration Response Spectrum Program/SPECA *3.9-20*
3.9.1.2.6.3 Fuel Support Loads Program/SEISM *3.9-20*
3.9.1.2.7 Balance-of-Plant Computer Programs *3.9-20*
3.9.1.2.7.1 S/RVDAM4 ..... *3.9-20*
3.9.1.3 Experimental Stress Analysis 3.9-21
3.9.1.3.1 Experimental Stress Analysis of Piping Components 3.9-22
3.9.1.3.2 Orificed Fuel Support, Vertical, and Horizontal Load Tests 3.9-22
3.9.1.4 Considerations for the Evaluation of Faulted Conditions 3.9-22
3.9.1.4.1 Control Rod Drive System Components 3.9-22
3.9.1.4.1.1 Control Rod Drives 3.9-22
3.9.1.4.1.2 Hydraulic Control Unit 3.9-23
3.9.1.4.1.3 Control Rod Drive Housing 3.9-23
3.9.1.4.2 Standard Reactor Internal Components 3.9-23
3.9.1.4.2.1 Control Rod Guide Tube 3.9-23
3.9.1.4.2.2 Jet Pump 3.9-23
3.9.1.4.2.3 Low-Pressure Coolant Injection Coupling 3.9-23
3.9.1.4.2.4 Orificed Fuel Support 3.9-23
3.9.1.4.3 Reactor Pressure Vessel Assembly 3.9-24
3.9.1.4.4 Core Structure 3.9-24
3.9.1.4.5 Main Steam Isolation, Recirculation Gate, and Safety/Relief Valves 3.9-24
3.9.1.4.6 Recirculation System Flow Control Valve 3.9-24
3.9.1.4.7 Main Steam and Recirculation Piping 3.9-24
3.9.1.4.8 Nuclear Steam Supply System Pumps, Heat Exchangers, and Turbine 3.9-24
3.9.1.4.9 Control Rod Drive Housing Supports 3.9-25

Chapter 3

DESIGN CRITERIA - STRUCTURES, COMPONENTS, EQUIPMENT, AND SYSTEMS

TABLE OF CONTENTS (Continued)

Section — Page

3.9.1.4.10 Fuel Storage Racks 3.9-25
3.9.1.4.11 Fuel Assembly Including Channels 3.9-25
3.9.1.4.12 Refueling Equipment 3.9-25
3.9.1.4.13 Balance-of-Plant Equipment 3.9-25
3.9.2 DYNAMIC TESTING AND ANALYSIS 3.9-26
3.9.2.1 Preoperational Vibration and Dynamic Effects Testing on Piping 3.9-26
3.9.2.1.1 Preoperational Vibration Testing 3.9-26
3.9.2.1.2 Small Attached Piping 3.9-26
3.9.2.1.3 Startup Vibration 3.9-26
3.9.2.1.4 Operating Transient Loads 3.9-27
3.9.2.1.5 Test Evaluation and Acceptance Criteria 3.9-27
3.9.2.1.5.1 Level 1 Criterion 3.9-28
3.9.2.1.5.2 Level 2 Criterion 3.9-28
3.9.2.1.6 Corrective Actions 3.9-28
3.9.2.1.7 Measurement Locations 3.9-29
3.9.2.2 Seismic and Hydrodynamic Loads Qualification of Safety-Related Mechanical Equipment 3.9-29
3.9.2.2.1 Test and Analysis Criteria and Methods 3.9-30
3.9.2.2.1.1 Random Vibration Input. 3.9-32
3.9.2.2.1.2 Application of Input Motion 3.9-32
3.9.2.2.1.3 Fixture Design 3.9-32
3.9.2.2.1.4 Prototype Testing 3.9-32
3.9.2.2.2 Seismic and Hydrodynamic Load Qualification of Specific Nuclear Steam Supply System Mechanical Components 3.9-32
3.9.2.2.2.1 Jet Pumps 3.9-32
3.9.2.2.2.2 Control Rod Drive and Control Rod Drive Housing 3.9-32
3.9.2.2.2.3 Core Support (Orificed Fuel Support and Control Rod Guide Tube) ... 3.9-32
3.9.2.2.2.4 Hydraulic Control Unit 3.9-32
3.9.2.2.2.5 Fuel Assembly Including Channels 3.9-33
3.9.2.2.2.6 Recirculation Pump and Motor Assembly 3.9-33
3.9.2.2.2.7 Emergency Core Cooling System Pumps and Motors Assembly 3.9-33
3.9.2.2.2.8 Reactor Core Isolation Cooling Pump Assembly 3.9-33
3.9.2.2.2.9 Reactor Core Isolation Cooling Turbine Assembly 3.9-33
3.9.2.2.2.10 Standby Liquid Control Pump and Motor Assembly 3.9-33
3.9.2.2.2.11 Residual Heat Removal Heat Exchangers 3.9-33

Chapter 3

DESIGN CRITERIA - STRUCTURES, COMPONENTS, EQUIPMENT, AND SYSTEMS

TABLE OF CONTENTS (Continued)

Section — Page

3.9.2.2.2.12 Standby Liquid Control Tank 3.9-34
3.9.2.2.2.13 Main Steam Isolation Valves 3.9-34
3.9.2.2.2.14 Main Steam Safety/Relief Valves 3.9-34
3.9.2.2.2.15 Fuel Pool Cooling and Cleanup System 3.9-34
3.9.2.2.3 Balance-of-Plant Safety-Related Mechanical Equipment 3.9-34
3.9.2.2.4 Suppression Pool Hydrodynamic Loads Qualification of Safety-Related Equipment 3.9-35
3.9.2.3 Dynamic Response of Reactor Internals Under Operational Flow Transients and Steady-State Conditions 3.9-35
3.9.2.4 Confirmatory Flow-Induced Vibration Testing of Reactor Internals 3.9-36
3.9.2.5 Dynamic System Analysis of the Reactor Internals Under Faulted Conditions 3.9-37
3.9.2.6 Correlations of Reactor Internals Vibration Tests With the Analytical Results 3.9-37
3.9.3 ASME CODE CLASS 1, 2, AND 3 COMPONENTS, COMPONENT SUPPORTS, AND CORE SUPPORT STRUCTURES 3.9-38
3.9.3.1 Loading Combinations, Design Transients, and Stress Limits 3.9-38
3.9.3.1.1 Plant Conditions 3.9-38
3.9.3.1.1.1 Normal Condition (Level A) 3.9-38
3.9.3.1.1.2 Upset Condition (Level B) 3.9-38
3.9.3.1.1.3 Emergency Condition (Level C) 3.9-39
3.9.3.1.1.4 Faulted Condition (Level D) 3.9-39
3.9.3.1.1.5 Correlation of Plant Conditions with Event Probability 3.9-39
3.9.3.1.1.6 Safety Class Functional Criteria 3.9-40
3.9.3.1.1.7 Compliance with Regulatory Guide 1.48 ..... 3.9-40
3.9.3.1.2 Reactor Pressure Vessel Assembly 3.9-42
3.9.3.1.3 Main Steam Piping 3.9-43
3.9.3.1.4 Recirculation Loop Piping 3.9-43
3.9.3.1.5 Recirculation System Valves 3.9-43
3.9.3.1.6 Recirculation Pump 3.9-43
3.9.3.1.7 Standby Liquid Control Tank 3.9-44
3.9.3.1.8 Residual Heat Removal Heat Exchangers 3.9-44
3.9.3.1.9 Reactor Core Isolation Cooling Turbine 3.9-44
3.9.3.1.10 Reactor Core Isolation Cooling Pump 3.9-44
3.9.3.1.11 Emergency Core Cooling System Pumps 3.9-45

Chapter 3

DESIGN CRITERIA - STRUCTURES, COMPONENTS, EQUIPMENT, AND SYSTEMS

TABLE OF CONTENTS (Continued)

Section — Page

3.9.3.1.12 Standby Liquid Control Pump 3.9-45
3.9.3.1.13 Safety/Relief Valves and Main Steam Isolation Valves..... 3.9-45
3.9.3.1.14 Safety/Relief Valve Discharge Piping 3.9-45
3.9.3.1.14.1 Main Steam Safety/Relief Valve Piping 3.9-45
3.9.3.1.14.2 Residual Heat Removal Suction Shutdown Thermal Relief Valve Piping 3.9-45
3.9.3.1.15 Reactor Water Cleanup System Pump and Heat Exchangers 3.9-45
3.9.3.1.16 Fuel Pool Cooling and Cleanup System Heat Exchangers and Pumps 3.9-46
3.9.3.1.17 Control Rod Drive Piping 3.9-46
3.9.3.1.18 Balance-of-Plant Piping 3.9-46
3.9.3.1.18.1 Criteria and Results..... 3.9-46
3.9.3.1.18.2 Method of Analysis..... 3.9-47
3.9.3.1.18.3 Seismic Loading..... 3.9-47
3.9.3.1.18.4 Other Dynamic Loadings..... 3.9-48
3.9.3.1.18.5 Analytical Models for Piping Systems 3.9-48
3.9.3.2 Pump and Valve Operability Assurance..... 3.9-48
3.9.3.2.1 Emergency Core Cooling System Pumps..... 3.9-49
3.9.3.2.1.1 Analysis of Loading, Stress, and Acceleration Conditions..... 3.9-49
3.9.3.2.1.2 Pump Operation During and Following Faulted Condition Loading 3.9-50
3.9.3.2.2 Standby Liquid Control Pump and Motor Assembly and Reactor Core Isolation Cooling Pump Assembly 3.9-50
3.9.3.2.3 Emergency Core Cooling System Pump Motors 3.9-50
3.9.3.2.4 ASME Code Class 1 Active Valves 3.9-51
3.9.3.2.4.1 Main Steam Isolation Valve 3.9-51
3.9.3.2.4.2 Main Steam Safety/Relief Valves..... 3.9-52
3.9.3.2.4.3 Standby Liquid Control Valve (Explosive Valve) 3.9-53
3.9.3.2.4.4 High-Pressure Core Spray Valve 3.9-53
3.9.3.2.5 Class 2 and 3 Active Valves 3.9-53
3.9.3.2.6 Engineered Safety Features Pumps 3.9-53
3.9.3.3 Design and Installation Details for Mounting of Pressure Relief Devices..... 3.9-54
3.9.3.3.1 Main Steam Safety/Relief Valves 3.9-54
3.9.3.3.2 Open Relief Systems 3.9-55
3.9.3.3.3 Closed Relief System..... 3.9-55

Chapter 3

DESIGN CRITERIA - STRUCTURES, COMPONENTS, EQUIPMENT, AND SYSTEMS

TABLE OF CONTENTS (Continued)

Section — Page

3.9.3.4 Component Supports 3.9-55
3.9.3.4.1 Pipe Supports 3.9-56
3.9.3.4.2 Reactor Pressure Vessel Support Skirt 3.9-59
3.9.3.4.3 Nuclear Steam Supply System Floor-Mounted Equipment (Pumps and Heat Exchangers) 3.9-59
3.9.3.4.4 Supports for ASME Code Class 1, 2, and 3 Active Components 3.9-59
3.9.3.5 Pipe Support Analysis 3.9-60
3.9.4 CONTROL ROD DRIVE SYSTEM 3.9-60
3.9.4.1 Descriptive Information Regarding Control Rod Drive Systems 3.9-61
3.9.4.2 Applicable Control Rod Drive Systems Design Specification 3.9-61
3.9.4.3 Design Loads, Stress Limits, and Allowable Deformation 3.9-61
3.9.4.4 Control Rod Drive Performance Assurance Program 3.9-62
3.9.5 REACTOR PRESSURE VESSEL INTERNALS 3.9-63
3.9.5.1 Design Arrangements 3.9-63
3.9.5.1.1 Core Support Structures and Vessel Internals 3.9-64
3.9.5.1.1.1 Shroud 3.9-64
3.9.5.1.1.2 Shroud Head and Steam Separator Assembly 3.9-64
3.9.5.1.2 Core Plate 3.9-65
3.9.5.1.3 Top Guide 3.9-65
3.9.5.1.4 Fuel Support 3.9-65
3.9.5.1.5 Control Rod Guide Tubes 3.9-65
3.9.5.1.6 Jet Pump Assemblies 3.9-66
3.9.5.1.7 Steam Dryers 3.9-66
3.9.5.1.8 Feedwater Spargers 3.9-66
3.9.5.1.9 Core Spray Lines and Standby Liquid Control Injection 3.9-67
3.9.5.1.10 Vessel Head Spray Nozzle 3.9-67
3.9.5.1.11 Differential Pressure Line 3.9-68
3.9.5.1.12 In-Core Flux Monitor Guide Tubes 3.9-68
3.9.5.1.13 Surveillance Sample Holders 3.9-68
3.9.5.1.14 Low-Pressure Coolant Injection Lines 3.9-68
3.9.5.1.15 Startup Neutron Sources 3.9-69
3.9.5.2 Design Loading Conditions 3.9-69
3.9.5.2.1 Events to be Evaluated 3.9-69
3.9.5.2.2 Pressure Differential During Rapid Depressurization 3.9-70

Chapter 3

DESIGN CRITERIA - STRUCTURES, COMPONENTS, EQUIPMENT, AND SYSTEMS

TABLE OF CONTENTS (Continued)

Section — Page

3.9.5.2.3 Recirculation Line and Steam Line Break 3.9-70
3.9.5.2.3.1 Accident Definition. 3.9-70
3.9.5.2.3.2 Effects of Initial Reactor Power and Core Flow 3.9-71
3.9.5.2.4 Seismic and Hydrodynamic Events 3.9-71
3.9.5.3 Design Loading Categories 3.9-71
3.9.5.4 Design Bases 3.9-72
3.9.5.4.1 Safety Design Bases 3.9-72
3.9.5.4.2 Power Generation Design Bases 3.9-72
3.9.5.4.3 Response of Internals Due to Inside Steam Break Accident 3.9-73
3.9.5.4.4 Stress, Deformation, and Fatigue Limits for Reactor Internals (Except Core Support Structure) 3.9-73
3.9.5.4.5 Stress, Deformation, and Fatigue Limits for Core Support Structures 3.9-73
3.9.6 INSERVICE TESTING OF PUMPS AND VALVES 3.9-74
3.9.7 REFERENCES 3.9-74

3.10 SEISMIC AND DYNAMIC QUALIFICATION OF SAFETY-RELATED INSTRUMENTATION AND ELECTRICAL EQUIPMENT 3.10-1
3.10.1 SEISMIC AND DYNAMIC QUALIFICATION CRITERIA 3.10-1
3.10.1.1 Safety-Related Equipment Identification 3.10-1
3.10.1.2 Criteria for Acceptability 3.10-2
3.10.1.2.1 Cable Tray and Conduit Supports 3.10-5
3.10.1.2.2 Decision Criteria (Original Construction Permit Basis) 3.10-5
3.10.1.2.2.1 Structurally Simple Equipment 3.10-5
3.10.1.2.2.2 Structurally Complex Equipment 3.10-5
3.10.1.2.2.3 Optional Dynamic Testing 3.10-6
3.10.1.2.2.4 Mandatory Dynamic Testing 3.10-6
3.10.1.2.2.5 Combined Test-Analysis 3.10-6
3.10.1.2.3 Reevaluation of Original Seismic Qualification 3.10-6
3.10.1.2.3.1 Reevaluation Decision Criteria 3.10-6
3.10.1.2.3.2 Static Analysis 3.10-7
3.10.1.2.3.3 Dynamic Analysis 3.10-7
3.10.1.2.3.4 Demonstration of Operability By Analysis 3.10-8
3.10.1.2.3.5 Consideration of Fatigue 3.10-8
3.10.1.2.3.6 Testing Methods 3.10-8
3.10.1.2.3.7 Combination of Testing and Analysis 3.10-10

Chapter 3

DESIGN CRITERIA - STRUCTURES, COMPONENTS, EQUIPMENT, AND SYSTEMS

TABLE OF CONTENTS (Continued)

Section — Page

3.10.2 METHODS AND PROCEDURES FOR QUALIFYING INSTRUMENTATION AND ELECTRICAL EQUIPMENT 3.10-10
3.10.2.1 Methods For Qualifying Nuclear Steam Supply System Equipment (Excluding Motors and Valve-Mounted Equipment) 3.10-10
3.10.2.2 Methods For Qualifying Balance-of-Plant Equipment 3.10-10
3.10.2.3 General Electric-Supplied Equipment Seismic Analyses and/or Testing Procedures 3.10-11
3.10.2.3.1 Testing Procedures for Qualifying Equipment (Excluding Motors and Valve-Mounted Equipment) 3.10-11
3.10.2.3.2 Qualification Procedures for Motors 3.10-12
3.10.2.3.3 Qualification Procedures for Valve-Mounted Equipment 3.10-12
3.10.2.4 Balance-of-Plant Equipment Analyses and/or Testing Procedures 3.10-12
3.10.3 METHODS AND PROCEDURES OF ANALYSIS OR TESTING OF SUPPORTS FOR INSTRUMENTATION AND ELECTRICAL EQUIPMENT 3.10-13
3.10.3.1 Nuclear Steam Supply System Equipment (Other Than Motors and Valve-Mounted Equipment) 3.10-13
3.10.3.2 Balance-of-Plant Supports 3.10-14
3.10.4 OPERATING LICENSE REVIEW 3.10-15
3.10.4.1 Establishment of Service Conditions 3.10-15
3.10.4.2 Establishment of Qualification Information and Documentation Files 3.10-15
3.10.4.3 Seismic Qualification Review Team Results of the Operating License Review by NRC 3.10-16
3.10.4.4 Pump and Valve Operability Review Team Audit Results of the Operating License Review by NRC 3.10-17
3.10.5 ESTABLISHMENT OF OPERATIONAL PHASE SEISMIC QUALIFICATION PROGRAM 3.10-17
3.10.6 REFERENCES 3.10-18
3.10A DYNAMIC ANALYSIS BY RESPONSE SPECTRUM METHOD FOR NUCLEAR STEAM SUPPLY SYSTEM EQUIPMENT 3.10A-1
3.10B SAMPLE SEISMIC STATIC ANALYSIS FOR NUCLEAR STEAM SUPPLY SYSTEM EQUIPMENT 3.10B-1
3.10C SAMPLE PANEL FREQUENCY ANALYSIS FOR NUCLEAR STEAM SUPPLY SYSTEM EQUIPMENT 3.10C-1

Chapter 3

DESIGN CRITERIA - STRUCTURES, COMPONENTS, EQUIPMENT, AND SYSTEMS

TABLE OF CONTENTS (Continued)

Section — Page

3.11 ENVIRONMENTAL DESIGN OF MECHANICAL AND ELECTRICAL EQUIPMENT 3.11-1
3.11.1 EQUIPMENT IDENTIFICATION AND ENVIRONMENTAL CONDITIONS 3.11-2
3.11.1.1 Identification of Electrical Equipment Important to Safety 3.11-2
3.11.1.1.1 Engineered Safety Features and Reactor Protection System Equipment 3.11-3
3.11.1.1.2 Postaccident Monitoring Electrical Equipment 3.11-3
3.11.1.1.3 Other Electrical Equipment Important to Safety 3.11-3
3.11.1.1.4 Electrical Equipment Whose Failure Does Not Affect Safety Function Performance 3.11-4
3.11.1.1.5 Safety-Related Mechanical Equipment 3.11-4
3.11.1.1.6 Identification of Safety-Related Equipment In Mild Environmental Plant Areas 3.11-4
3.11.1.2 Normal and Accident Environmental Service Conditions 3.11-5
3.11.1.2.1 Normal Plant Operational Environmental Conditions (Except Radiation) 3.11-5
3.11.1.2.2 Accident Environmental Service Conditions (Except Radiation) 3.11-5
3.11.1.2.3 Radiation Service Conditions 3.11-6
3.11.1.2.4 Accident Conditions - Harsh Environments 3.11-6
3.11.2 QUALIFICATION TESTS AND ANALYSES 3.11-7
3.11.3 QUALIFICATION PROGRAM RESULTS 3.11-7
3.11.3.1 NRC Review of the CGS Environmental Qualification Program 3.11-7
3.11.3.2 Establishment of Operational Phase Environmental Qualification Review 3.11-8
3.11.4 LOSS OF VENTILATION 3.11-9
3.11.4.1 Main Control Room Air Conditioning and Ventilation System 3.11-9
3.11.4.2 Reactor Building Emergency Cooling System 3.11-9
3.11.4.3 Miscellaneous Ventilation Systems 3.11-10
3.11.5 ESTIMATED CHEMICAL AND RADIATION ENVIRONMENT 3.11-10
3.11.5.1 Suppression Pool, Residual Heat Removal System, and Emergency Core Cooling System Water Quality 3.11-10
3.11.5.2 Qualification 3.11-11
3.11.6 REFERENCES 3.11-11

Chapter 3

DESIGN CRITERIA - STRUCTURES, COMPONENTS, EQUIPMENT, AND SYSTEMS

TABLE OF CONTENTS (Continued)

Section — Page

3.12 COMPUTER PROGRAMS FOR STRUCTURAL ANALYSIS AND DESIGN 3.12-1
3.12.1 DACSR 3.12-2
3.12.2 AX1 ..... 3.12-3
3.12.3 AX2 ..... 3.12-3
3.12.4 AX3 ..... 3.12-5
3.12.5 STRUDL II 3.12-5
3.12.6 STARS-2S 3.12-6
3.12.7 NASTRAN 3.12-8
3.12.8 FLXMAT 3.12-9
3.12.9 ISOFINITE 3.12-11
3.12.10 ANSYS 3.12-13
3.12.11 RELAP3 ..... 3.12-14
3.12.11.1 RELAP4/MOD5 ..... 3.12-14
3.12.11.2 S/RVDAM 3.12-14
3.12.11.3 GOTHIC 7.0/8.1 ..... 3.12-14
3.12.12 CB&I PROGRAM 711 - "GENOZZ" 3.12-14
3.12.13 CB&I PROGRAM 948 - "NAPALM" 3.12-14
3.12.14 CB&I PROGRAM 1027 ..... 3.12-15
3.12.15 CB&I PROGRAM 846 ..... 3.12-15
3.12.16 CB&I PROGRAM 781 - "KALNINS" 3.12-15
3.12.17 CB&I PROGRAM 979 - "ASFAST" 3.12-15
3.12.18 CB&I PROGRAM 766 - "TEMAPR" 3.12-15
3.12.19 CB&I PROGRAM 767 - "PRINCESS" 3.12-15
3.12.20 CB&I PROGRAM 928 - "TGRV" 3.12-15
3.12.21 CB&I PROGRAM 962 - "E0962A" 3.12-15
3.12.22 CB&I PROGRAM 984 ..... 3.12-15
3.12.23 CB&I PROGRAM 992 - "GASP" 3.12-15
3.12.24 CB&I PROGRAM 1037 - "DUNHAM'S" 3.12-16
3.12.25 CB&I PROGRAM 1335 ..... 3.12-16
3.12.26 CB&I PROGRAM 1606 and 1657 - "HAP" 3.12-16
3.12.27 CB&I PROGRAM 1635 ..... 3.12-16
3.12.28 CB&I PROGRAM 953 ..... 3.12-16
3.12.29 ALGOR SUPERSAP COMPUTER PROGRAM 3.12-16
3.12.30 MASS 3.12-16

Chapter 3

DESIGN CRITERIA - STRUCTURES, COMPONENTS, EQUIPMENT, AND SYSTEMS

TABLE OF CONTENTS (Continued)

Section Page

3.12.31 MULTISHELL 3.12-16
3.12.32 SAP4G07 ..... 3.12-16
3.12.33 PDA 3.12-17
3.12.34 DELETED 3.12-17
3.12.35 DELETED 3.12-17
3.12.36 DELETED 3.12-17
3.12.37 ADLPIPE 3.12-17
3.12.38 NUPIPE-IIM (Version 1.6.3) 3.12-17
3.12.39 TPIPE (Version 4.2) 3.12-18
3.12.40 PIPESUP-CS102 (Version 2): Gilbert Commonwealth 3.12-18
3.12.41 P001 (Version 6.0): Gilbert Commonwealth 3.12-18
3.12.42 P002 (Version 4.0): Gilbert Commonwealth 3.12-18
3.12.43 P003 (Version 5.0): Gilbert Commonwealth 3.12-19
3.12.44 T-MOVE (Version V0-00): Gilbert Commonwealth 3.12-19
3.12.45 BPIPE-CS085 (Version 2) 3.12-19
3.12.46 SPLUG (Originators J. Kutzen, J. B. Mahoney, V. Ral-Bahade) 3.12-20
3.12.47 REFERENCES 3.12-20

APPENDIX 3A PLANT DESIGN ASSESSMENT REPORT FOR SAFETY/RELIEF VALVES AND LOSS-OF-COOLANT ACCIDENT LOADS 3A-i

Chapter 3

DESIGN CRITERIA - STRUCTURES, COMPONENTS, EQUIPMENT, AND SYSTEMS

LIST OF TABLES

Number	Title	Page
3.2-1	Equipment Classification	3.2-9
3.2-2	Code Group Designations - Industry Codes and Standards for Mechanical Components	3.2-63
3.2-3	Summary of Safety Class Design Requirements (Minimum)	3.2-65
3.5-1	Systems Description Outside Containment	3.5-33
3.5-2	Internally Generated Missiles Outside Containment	3.5-34
3.5-3	Plant Systems Protected by Missile Barriers	3.5-41
3.5-4	Systems Description Inside Containment	3.5-42
3.5-5	Tornado Missiles	3.5-43
3.5-6	Location of and Missile Protection Provided for Fresh Air Intakes (FAI) and Exhausts (EXH)	3.5-44
3.6-1	High Energy Fluid Systems Outside Primary Containment	3.6-77
3.6-2	Moderate Energy Fluid Systems Outside Primary Containment	3.6-78
3.6-3	Design Basis Break Locations Outside Primary Containment	3.6-79
3.6-4	Resistance-Yield Displacement Values for Beams	3.6-84
3.6-5	Resistance-Yield Displacement Values for Slabs and Plates	3.6-87
3.6-6	Design Load in Areas Where Piping Failures Occur	3.6-88
3.6-7	Maximum Ductility Ratios Steel Structural Components	3.6-90
3.6-8	Dynamic Strength of Materials	3.6-91

Chapter 3

DESIGN CRITERIA - STRUCTURES, COMPONENTS, EQUIPMENT, AND SYSTEMS

LIST OF TABLES (Continued)

Number	Title	Page
3.6-9	Summary of Subcompartment Pressure Analysis	3.6-92
3.6-10	Subcompartment Analysis - Nodal Volume Data for a Postulated Pipe Break in the Main Steam Tunnel	3.6-94
3.6-11	Subcompartment Analysis - Flow Junction Data for a Postulated Pipe Break in the Main Steam Tunnel	3.6-95
3.6-12	Main Steam Tunnel Subcompartment Analysis Information for Blowout Panels C and D	3.6-96
3.6-13	Subcompartment Analysis - Nodal Volume Data for a Postulated Pipe Break in the Main Steam Tunnel Extension	3.6-97
3.6-14	Subcompartment Analysis - Flow Junction Data for a Postulated Pipe Break in the Main Steam Tunnel Extension	3.6-98
3.6-15	Piping Systems Inside Containment for Which Design Basis Pipe Breaks are Postulated	3.6-99
3.6-16	Piping Systems Containing Break Exclusion Areas Between Primary Containment Isolation Valves	3.6-101
3.7-1	Damping Coefficients	3.7-39
3.7-2	Foundation/Supporting Media for Seismic Category I Structures	3.7-40
3.7-3	Reactor Building - Seismic Analysis Natural Frequency and Natural Period	3.7-41
3.7-4	Reactor Building - Seismic Analysis Horizontal N-S Direction - OBE Acceleration (units in g x 10^{-3})	3.7-42

Chapter 3

DESIGN CRITERIA - STRUCTURES, COMPONENTS, EQUIPMENT, AND SYSTEMS

LIST OF TABLES (Continued)

Number	Title	Page
3.7-5	Reactor Building - Seismic Analysis Horizontal N-S Direction - OBE Displacement (units in ft x 10^{-4})	3.7-43
3.7-6	Reactor Building - Seismic Analysis Horizontal N-S Direction - OBE Member Shears (units in kips)	3.7-44
3.7-7	Reactor Building - Seismic Analysis Horizontal N-S Direction - OBE Member Moments (units in ft-kips x 10^{3})	3.7-45
3.7-8	Reactor Building - Seismic Analysis Horizontal N-S Direction - SSE Acceleration (units in g x 10^{-3})	3.7-48
3.7-9	Reactor Building - Seismic Analysis Horizontal N-S Direction - SSE Displacement (units in ft x 10^{-4})	3.7-49
3.7-10	Reactor Building - Seismic Analysis Horizontal N-S Direction - SSE Member Shears (units in kips)	3.7-50
3.7-11	Reactor Building - Seismic Analysis Horizontal N-S Direction - OBE Member Moments (units in ft-kips x 10^{3})	3.7-51
3.7-12	Reactor Building - Seismic Analysis Vertical Direction - OBE Acceleration (units in g x 10^{-3})	3.7-54
3.7-13	Reactor Building - Seismic Analysis Vertical Direction - OBE Displacement (units in ft x 10^{-6})	3.7-55
3.7-14	Reactor Building - Seismic Analysis Vertical Direction - SSE Acceleration (units in g x 10^{-3})	3.7-56
3.7-15	Reactor Building - Seismic Analysis Vertical Direction - SSE Displacement (units in ft x 10^{-6})	3.7-57
3.7-16	Lumped Representation of Soil-Structure Interaction	3.7-58

Chapter 3

DESIGN CRITERIA - STRUCTURES, COMPONENTS, EQUIPMENT, AND SYSTEMS

LIST OF TABLES (Continued)

Number	Title	Page
3.7-17	Dynamic Response Cycles Expected During a Seismic Event for Nuclear Steam Supply Systems and Components	3.7-60
3.7-18	Fatigue Evaluation Due to Seismic Load	3.7-61
3.7-19	Comparison of the Maximum and Allowable Seismic Loads of Reactor Pressure Vessel and Internals	3.7-62
3.8-1	Primary Containment Drywell and Pressure Suppression Chamber Principal Design	3.8-143
3.8-2	Containment Environmental Design Conditions	3.8-145
3.8-3	Primary Containment Pressure Suppression System Maximum Accident Pressure Comparison	3.8-146
3.8-4	List of Applicable Codes, Standards, Specifications, and Regulatory Guides	3.8-147
3.8-5	Load Combinations and Load Factors Concrete Internal Structures of Steel Containment	3.8-153
3.8-6	Load Combinations and Load Factors Steel Internal Structures of Steel Containment	3.8-155
3.8-7	Section Strength Limits and Section Modulus for Structural Steel Internal Structures of Steel Containment	3.8-157
3.8-8	Radwaste and Control Building Quality Class and Design Bases Criteria	3.8-158
3.8-9	Load Combinations and Load Factors Seismic Category I and Nonseismic Category I Safety-Related Concrete Structures Outside Primary Metal Containment	3.8-159

Chapter 3

DESIGN CRITERIA - STRUCTURES, COMPONENTS, EQUIPMENT, AND SYSTEMS

LIST OF TABLES (Continued)

Number	Title	Page
3.8-10	Load Combinations and Load Factors Seismic Category I and Nonseismic Category I Safety-Related Steel Structures Outside Primary Metal Containment	3.8-161
3.8-11	Seismic Category I and Nonseismic Safety-Related Steel Structures Outside Primary Metal Containment	3.8-164
3.8-12	Maximum Permissible Stresses Seismic Category I and Nonseismic Category I Safety-Related Reinforced-Concrete Structures	3.8-166
3.8-13	Primary Containment Vessel Electrical Penetrations Principal Design Parameters	3.8-167
3.8-14	Primary Containment Vessel Piping Penetrations Principal Design	3.8-168
3.9-1	Plant Events (for Nuclear Steam Supply System and Balance-of-Plant)	3.9-77
3.9-2	Loading Combination and Acceptance Criteria for ASME Code Class 1, 2, and 3 Piping and Equipment	3.9-79
3.9-2a	Reactor Pressure Vessel and Shroud Support Assembly	3.9-85
3.9-2b	Reactor Internals and Associated Equipment	3.9-89
3.9-2c	Deleted	
3.9-2d	ASME Code Class 1 Main Steam Piping and Pipe Mounted Equipment - Highest Stress Summary	3.9-95
3.9-2e	ASME Code Class 1 Recirculation Piping and Pipe Mounted Equipment - Highest Stress Summary	3.9-99

Chapter 3

DESIGN CRITERIA - STRUCTURES, COMPONENTS, EQUIPMENT, AND SYSTEMS

LIST OF TABLES (Continued)

Number	Title	Page
3.9-2f	Recirculation Flow Control Valve (24 in. - Neles/Jamesburg, Formerly Hammel-Dahl) (Kept in Mechanically Blocked Full Open Position)	3.9-103
3.9-2g	Safety/Relief Valves (Main Steam) Spring-Loaded, Direct Acting Type ASME Code, Section III, July 1971	3.9-104
3.9-2h	Main Steam Isolation Valve	3.9-109
3.9-2i	Recirculation Pump	3.9-122
3.9-2j	Reactor Recirculation System Gate Valves, 24 in. Discharge Structural and Mechanical Loading Criteria	3.9-127
3.9-2k	Not Used	3.9-133
3.9-2L	Standby Liquid Control Pump	3.9-134
3.9-2m	Standby Liquid Control Tank	3.9-138
3.9-2n	Emergency Core Cooling System Pumps	3.9-139
3.9-2o	Residual Heat Removal Heat Exchanger	3.9-142
3.9-2p	Reactor Water Cleanup Pump	3.9-146
3.9-2q	Not Used	3.9-147
3.9-2r	Reactor Core Isolation Cooling Pump	3.9-148
3.9-2s	Reactor Refueling and Servicing Equipment	3.9-152
3.9-2t	Not Used	3.9-155
3.9-2u	Control Rod Drive (Indicator Tube)	3.9-156

Chapter 3

DESIGN CRITERIA - STRUCTURES, COMPONENTS, EQUIPMENT, AND SYSTEMS

LIST OF TABLES (Continued)

Number	Title	Page
3.9-2v	Control Rod Drive Housing	3.9-157
3.9-2w	Jet Pumps	3.9-158
3.9-2x	Not Used	3.9-159
3.9-2y	Low-Pressure Coolant Injection Coupling	3.9-160
3.9-2z	Not Used	3.9-161
3.9-2aa	Control Rod Guide Tube	3.9-162
3.9-2ab	Incore Housing	3.9-163
3.9-2ac	Reactor Vessel Support Equipment	3.9-164
3.9-3	Load and Stress Criteria For ASME Code Section III Class 1 Piping	3.9-168
3.9-4	Load and Stress Criteria for ASME Code Class 2 and 3 Piping System	3.9-171
3.11-1	Normal Operating Conditions	3.11-13
3.11-2	Accident Environment Conditions (Primary Containment) for Essential Equipment	3.11-18
3.11-3	Water Quality Limits	3.11-22
3.12-1	*DACSR Computer Program Verification DACSR Program Versus Stardyne Program Frequency Comparison (Hz)*	*3.12-23*
3.12-2	*Isofinite Computer Program Verification Using Computer Program NASTRAN*	*3.12-30*

Chapter 3

DESIGN CRITERIA - STRUCTURES, COMPONENTS, EQUIPMENT, AND SYSTEMS

LIST OF FIGURES

Number	Title
3.2-1	DELETED
3.2-2	Standby Gas Treatment System
3.2-3	Primary Containment Atmospheric Control System (Deactivated)
3.2-4	Flow Diagrams, Miscellaneous Drains, Vents, and Sealing Systems - Turbine Generator Building
3.2-5	Main Steam Isolation Valve Leakage Control System
3.2-6	Postaccident Sampling System
3.2-7	Reactor Building Nitrogen Inerting System
3.5-1	RHR, LPCS, RCC, FPC, SLC, and CPR Plan, Sections and Details - El. 422 ft 3 in. - Reactor Building
3.5-2	RHR, LPCS, RCC, FPC, and CPR Plan, Sections and Details - El. 444 ft 0 in. and Elev. 441 ft 0 in. - Reactor Building
3.5-3	RHR, LPCS, RCC, FPC, SLC, and CPR Partial Plan, Sections and Details - El. 471 ft 0 in. - Reactor Building
3.5-4	RHR, LPCS, RCC, FPC, SLC, and CPR Plan, Sections and Details - El. 501 ft 0 in. - Reactor Building
3.5-5	RHR, LPCS, RCC, FPC, SLC, and CPR Plan, Sections and Details - El. 522 ft 0 in. - Reactor Building
3.5-6	Sections and Details - El. 548 ft 0 in. - Reactor Building
3.5-7	RHR, LPCS, RCC, FPC, SLC, and CPR Plan, Sections and Details - El. 572 ft 0 in. - Reactor Building
3.5-8	RHR, LPCS, RCC, FPC, SLC, and CPR Plan, Sections and Details - Reactor Building

Chapter 3

DESIGN CRITERIA - STRUCTURES, COMPONENTS, EQUIPMENT, AND SYSTEMS

LIST OF FIGURES (Continued)

Number	Title
3.5-9	RFW, RCIC, HPCS, SW, RWCU, RRC, and TSW - El. 422 ft 3 in. - Reactor Building
3.5-10	RFW, RCIC, HPCS, SW, RWCU, RRC, and TSW - El. 441 ft 0 in. - Reactor Building
3.5-11	RFW, RCIC, HPCS, SW, RWCU, RRC, and TSW - El. 501 ft 0 in. - Reactor Building
3.5-12	RFW, RCIC, HPCS, SW, RWCU, RRC, and TSW - El. 552 ft 0 in. - Reactor Building
3.5-13	RFW, RCIC, HPCS, SW, RWCU, RRC, and TSW - El. 548 ft 0 in. - Reactor Building
3.5-14	RFW, RCIC, HPCS, SW, RWCU, RRC, and TSW - Miscellaneous Plan, Sections and Details - Reactor Building
3.5-15	Control Rod Drive Piping Plan and Sections - El. 522 ft 0 in. - Reactor Building
3.5-16	*Containment Composite Plan and Sections - El. 556 ft 5 in.*
3.5-17	*Containment Composite Plan - El. 545 ft 6 in.*
3.5-18	*Containment Composite Plan and Section Developments - El. 541 ft 3-3/4 in. and El. 567 ft 4-1/2 in.*
3.5-19	*Containment Composite Plan - El. 524 ft 3-7/8 in. - Azimuth 0° to 180°*
3.5-20	*Containment Composite Plan - El. 524 ft 3-7/8 in. - Azimuth 180° to 360°*
3.5-21	*Containment Composite Plan - El. 512 ft 9-1/2 in. - Azimuth 0° to 180°*
3.5-22	*Containment Composite Plan - El. 512 ft 9-1/2 in. - Azimuth 180° to 360°*

Chapter 3

DESIGN CRITERIA - STRUCTURES, COMPONENTS, EQUIPMENT, AND SYSTEMS

LIST OF FIGURES (Continued)

Number	Title
3.5-23	*Containment Composite Plan - El. 501 ft 0 in. - Azimuth 0° to 180°*
3.5-24	*Containment Composite Plan - El. 501 ft 0 in. - Azimuth 180° to 360°*
3.5-25	*Containment Composite Sections "1-1" and "2-2"*
3.5-26	*Containment Composite Sections "3-3" and "4-4"*
3.5-27	*Containment Composite Sections "5-5" and "6-6"*
3.5-28	*Containment Composite Sections "7-7" and "8-8"*
3.5-29	Instrumentation Lines Plan - El. 560 ft 0 in. and El. 583 ft 1-1/4 in. - Reactor Building
3.5-30	Instrumentation Lines Plan - Platform El. 541 ft 3-3/4 in. - Reactor Building
3.5-31	Instrumentation Process (PI) Plan - Floor El. 522 ft 0 in. - Reactor Building
3.5-32	Instrumentation Process (PI) Plan - Platform El. 512 ft 9-1/2 in. - Reactor Building
3.5-33	Turbine Generator Placement and Orientation
3.5-34	Turbine Missile Target Location
3.5-35	Exterior Walls Exposed To Missile Impact
3.5-36	Reactor Building Plan - El. 572 ft 0 in.
3.5-37	Reactor Building Exterior Walls
3.5-38	Reactor Building Exterior Walls Details
3.5-39	Radwaste and Control Building Roof Plan - El. 542 ft 0 in.
3.5-40	Radwaste and Control Building

Chapter 3

DESIGN CRITERIA - STRUCTURES, COMPONENTS, EQUIPMENT, AND SYSTEMS

LIST OF FIGURES (Continued)

Number	Title
3.5-41	Diesel Generator Building - El. 455 ft 0 in.
3.5-42	Diesel Generator Building Sections
3.5-43	Diesel Generator Building Roof - Plan and Sections
3.5-44	Diesel Generator Building El.
3.5-45	Radwaste and Control Building Plan - El. 525 ft 0 in. and 517 ft 0 in.
3.5-46	Standby Service Water Pump House - El. and Details
3.5-47	Standby Service Water Pump House 1A and 1B Plans - El. 441 ft 0 in. and Roof
3.5-48	Cantilever Barrier Structure
3.5-49	General Arrangement - El. 501 ft 0 in., 507 ft 0 in., and 525 ft 0 in. – Radwaste Building
3.5-50	Radwaste and Control Building Control Room Fresh Air Intake and Exhaust - Shield Walls, Slab, and Hood for External Missiles
3.6-1	Main and Auxillary Steam - Valve Vents and Miscellaneous Drain Piping Partial Plan - El. 441 ft 0 in., 471 ft 0 in., 548 ft 0 in., and 572 ft 0 in. - Reactor Building
3.6-2	Main and Auxillary Steam - Valve Vents and Miscellaneous Drain Piping Plan - El. 501 ft 0 in. - Reactor Building
3.6-3	Main and Auxillary Steam - Valve Vents and Miscellaneous Drain Piping Partial Plan - El. 552 ft 0 in., 541 ft 3-3/4 in., 568 ft 7-3/4 in. and 583 ft 1-1/4 in. - Reactor Building
3.6-4	Main and Auxillary Steam - Valve Vents and Miscellaneous Drain Piping Sections and Details - Reactor Building

Chapter 3

DESIGN CRITERIA - STRUCTURES, COMPONENTS, EQUIPMENT, AND SYSTEMS

LIST OF FIGURES (Continued)

Number	Title
3.6-5	RFW, RCIC, HPCS, SW, RWCU, RRC, and TSW - El. 422 ft 3 in. - Reactor Building
3.6-6	Deleted
3.6-7	Deleted
3.6-8	RFW, RCIC, HPCS, SW, RWCU, RRC, and TSW - El. 522 ft 0 in. - Reactor Building
3.6-9	RFW, RCIC, HPCS, SW, RWCU, RRC, and TSW - El. 548 ft 0 in. - Reactor Building
3.6-10	RFW, RCIC, HPCS, SW, RWCU, RRC, and TSW - Miscellaneous Plan, Sections and Details - Reactor Building
3.6-11	RFW, RCIC, HPCS, SW, RWCU, RRC, and TSW - El. 471 ft 0 in. Miscellaneous Plan, Sections and Details - Reactor Building
3.6-12	RFW, RCIC, HPCS, SW, RWCU, RRC, and TSW - Sections and Details - Reactor Building
3.6-13	Control Rod Drive Piping Plan and Sections - El. 522 ft 0 in. - Reactor Building
3.6-14	Control Rod Drive Piping Plan and Sections - Containment Vessel and Reactor Building
3.6-15	Control Rod Drive Piping Plan and Sections - Reactor Building
3.6-16	HVAC Plans and Sections - El. 471 ft 0 in. - Reactor Building
3.6-17	HVAC Plans and Sections - El. 548 ft 0 in. - Reactor Building

Chapter 3

DESIGN CRITERIA - STRUCTURES, COMPONENTS, EQUIPMENT, AND SYSTEMS

LIST OF FIGURES (Continued)

Number	Title
3.6-18	HVAC Plans and Sections - El. 572 ft 0 in. - Reactor Building
3.6-19	HVAC Plans and Sections - Reactor Building
3.6-20	HVAC Plans and Sections - Reactor Building
3.6-20A	Condensate Polishing and RWCU Piping Plan – El. 467 ft 0 in. and 477 ft 0 in. – Radwaste Building
3.6-20B	Condensate Polishing and RWCU Piping Plan – El. 487 ft 0 in. – Miscellaneous Partial Plans and Sections – Radwaste Building
3.6-21	U-Bar Type Pipe Whip Restraint Configuration
3.6-22	Rigid Type Pipe Whip Restraint Configuration (Sheets 1 through 5)
3.6-23	Pipe Whip Restraint Installation - Main Steam System (Sheets 1 through 6)
3.6-24	Pipe Whip Restraint Installation - Main Steam and Reactor Feedwater in Main Steam Tunnel (Sheets 1 through 4)
3.6-25	Pipe Whip Impact on Target
3.6-26	Jet Impingment on Target
3.6-27	Time History of Jet Impingement and Reaction Force
3.6-28	Structural Response to a Step Function Loading
3.6-29	Resistance-Displacement Functions with Associated Structural Response (With and Without Effect of Other Loads)
3.6-30	Jet from Circumferential Break with Ends Restrained (Fan Jet)
3.6-31	Design for Wall Rebound
3.6-32	Main Steam Loop A Isometric (Sheets 1 and 2)
3.6-33	Main Steam Loop B Isometric (Sheets 1 and 2)
3.6-34	Main Steam Loop C Isometric (Sheets 1 and 2)
3.6-35	Main Steam Loop D Isometric (Sheets 1 and 2)

Chapter 3

DESIGN CRITERIA - STRUCTURES, COMPONENTS, EQUIPMENT, AND SYSTEMS

LIST OF FIGURES (Continued)

Number	Title
3.6-36	Reactor Feedwater (Line A) Isometric (Sheets 1 and 2)
3.6-37	Reactor Feedwater (Line B) Isometric (Sheets 1 and 2)
3.6-38	Reactor Water Cleanup Isometric (Sheets 1 through 5)
3.6-39	Standby Liquid Control Isometric (Sheets 1 through 3)
3.6-40	Residual Heat Removal - LPCI Mode (Loop A) Isometric (Sheets 1 and 2)
3.6-41	Residual Heat Removal - LPCI Mode (Loop B) Isometric (Sheets 1 and 2)
3.6-42	Residual Heat Removal - LPCI Mode (Loop C) Isometric (Sheets 1 and 2)
3.6-43	Residual Heat Removal - Shutdown Cooling (Loop A) Isometric (Sheets 1 and 2)
3.6-44	Residual Heat Removal - Shutdown Cooling (Loop B) Isometric (Sheets 1 and 2)
3.6-45	Residual Heat Removal - Shutdown Cooling Supply Isometric (Sheets 1 and 2)
3.6-46	RCIC/RPV Head Spray Isometric (Sheets 1 and 2)
3.6-47	Low-Pressure Core Spray Isometric (Sheets 1 and 2)
3.6-48	High-Pressure Core Spray Isometric (Sheets 1 and 2)
3.6-49	RHR Condensing Mode - RCIC Turbine Steam Isometric (Sheets 1 and 2)
3.6-50	Main Steam Valves Drainage Piping Isometric (Sheets 1 through 3)
3.6-51	Main Steam RPV Head Vent Piping Isometric (Sheets 1 through 3)
3.6-52	RRC Reactor Pressure Vessel Drain Isometric (Sheets 1 and 2)

Chapter 3

DESIGN CRITERIA - STRUCTURES, COMPONENTS, EQUIPMENT, AND SYSTEMS

LIST OF FIGURES (Continued)

Number	Title
3.6-53	Main Steam Piping (Loop A, B, C, and D) - Inside Main Steam Tunnel (Sheets 1 and 2)
3.6-54	RFW Piping (Loop A and B) - Inside Main Steam Tunnel (Sheets 1 and 2)
3.6-55	Reactor Recirculation Piping System (Loop A and B) (Sheets 1 and 2)
3.6-56	Recirculation Piping System Break Locations and Restraints Near Break Locations (Loop A and B) (Sheets 1 and 2)
3.6-57	Special Pipe Whip Restraint Structure Between Diaphragm Floor and Containment (Sheets 1 through 3)
3.6-58	Main Steam Routing from Primary Containment to Turbine Generator Building
3.6-59	Reactor Feedwater Routing from Primary Containment to Turbine Generator Building
3.6-60	Main Steam and Reactor Feedwater Routing from Containment to Turbine Generator Building (Sheets 1 and 2)
3.6-61	Blowdown Mass Flow Rate from Postulated Crack in 26-in. Main Steam Line - Outside Primary Containment in Main Steam Tunnel
3.6-62	Energy Release Rate from Postulated Crack in 26-in. Main Steam Line - Outside Primary Containment in Main Steam Tunnel
3.6-63	Blowdown Mass Flow Rate from Postulated Crack in 24-in. Reactor Feedwater Line - Outside Primary Containment in Main Steam Tunnel
3.6-64	Energy Release Rate from Postulated Crack in 24-in. Reactor Feedwater Line - Outside Primary Containment in Main Steam Tunnel
3.6-65	Main Steam Tunnel Ventway and Tunnel Extension - Sectional Plan
3.6-66	Main Steam Tunnel Ventway and Tunnel Extension - Section A-A

Chapter 3

DESIGN CRITERIA - STRUCTURES, COMPONENTS, EQUIPMENT, AND SYSTEMS

LIST OF FIGURES (Continued)

Number	Title
3.6-67	Nodalization Scheme for a Postulated Pipe Break in Main Steam Tunnel
3.6-68	Pressure Transient in Node 1 of Main Steam Tunnel After a Postulated Main Steam Pipe Break in Node 1 of Main Steam Tunnel
3.6-69	Pressure Transient in Node 2 of Main Steam Tunnel After a Postulated Main Steam Pipe Break in Node 1 of Main Steam Tunnel
3.6-70	Temperature Transient in Node 1 of Main Steam Tunnel After a Postulated Main Steam Pipe Break in Node 1 of Main Steam Tunnel
3.6-71	Temperature Transient in Node 2 of Main Steam Tunnel After a Postulated Main Steam Pipe Break in Node 1 of Main Steam Tunnel
3.6-72	Pressure Transient in Node 1 of Main Steam Tunnel After a Postulated Main Steam Pipe Break in Node 2 of Main Steam Tunnel
3.6-73	Pressure Transient in Node 2 of Main Steam Tunnel After a Postulated Main Steam Pipe Break in Node 2 of Main Steam Tunnel
3.6-74	Temperature Transient in Node 1 of Main Steam Tunnel After a Postulated Main Steam Pipe Break in Node 2 of Main Steam Tunnel
3.6-75	Temperature Transient in Node 2 of Main Steam Tunnel After a Postulated Main Steam Pipe Break in Node 2 of Main Steam Tunnel
3.6-76	Nodalization Scheme for Postulated Pipe Break in Main Steam Tunnel Extension
3.6-77	Pressure Transient in Node 1 of Main Steam Tunnel Extension After a Postulated Main Steam Pipe Break in Node 1 of Main Steam Tunnel Extension
3.6-78	Pressure Transient in Node 2 of Main Steam Tunnel Extension After a Postulated Main Steam Pipe Break in Node 1 of Main Steam Tunnel Extension
3.6-79	Temperature Transient in Node 1 of Main Steam Tunnel Extension After a Postulated Main Steam Pipe Break in Node 1 of Main Steam Tunnel Extension

Chapter 3

DESIGN CRITERIA - STRUCTURES, COMPONENTS, EQUIPMENT, AND SYSTEMS

LIST OF FIGURES (Continued)

Number	Title
3.6-80	Temperature Transient in Node 2 of Main Steam Tunnel Extension After a Postulated Main Steam Pipe Break in Node 1 of Main Steam Tunnel Extension
3.6-81	Pressure Transient in Node 1 of Main Steam Tunnel Extension After a Postulated Main Steam Pipe Break in Node 2 of Main Steam Tunnel Extension
3.6-82	Pressure Transient in Node 2 of Main Steam Tunnel Extension After a Postulated Main Steam Pipe Break in Node 2 of Main Steam Tunnel Extension
3.6-83	Temperature Transient in Node 2 of Main Steam Tunnel Extension After a Postulated Main Steam Pipe Break in Node 2 of Main Steam Tunnel Extension
3.6-84	Temperature Transient in Node 2 of Main Steam Tunnel Extension After a Postulated Main Steam Pipe Break in Node 2 of Main Steam Tunnel Extension
3.6-85	Main Steam Piping System
3.6-86	Reactor Feedwater Piping System
3.6-87	RHR Condensing Mode/RCIC Turbine Steam Piping System
3.6-88	Reactor Water Cleanup Piping System
3.6-89	Analytical Model
3.6-90	Required Resistance of Structures (R_r)
3.6-91	Fluid Jet Geometry
3.6-92	Pipe Whip Restraint Installation - RWCU System (Sheets 1 through 3)
3.6-93	Pipe Whip Restraint Installation - LPCS System
3.6-94	Pipe Whip Restraint Installation - RHR System (Sheets 1 and 2)
3.6-95	Pipe Whip Restraint Installation - RHR Shutdown Cooling Supply System

Chapter 3

DESIGN CRITERIA - STRUCTURES, COMPONENTS, EQUIPMENT, AND SYSTEMS

LIST OF FIGURES (Continued)

Number	Title
3.6-96	Thrust Versus Time - Reactor Side of Break on 4 in. RCIC (13) - 4 in Room R206
3.6-97	Thrust Versus Time - Reactor Side of Break on 4 in. RCIC (13) - 4 - El. 431.8 ft
3.6-98	Thrust Versus Time - Upstream Side of Break on 4 in. RWCU (2) - 4 - El. 536 ft 0 in., Room R409
3.6-99	Thrust Versus Time - Heat Exchanger Side of Break on 6 in. RWCU (2) - 4 - El. 514 ft 0 in., Room R308
3.6-100	Thrust Versus Time - Pump Side of Break on 6 in. RWCU (1) - 4 - El. 548 ft 0 in., Room R409
3.6-101	Thrust Versus Time - Pump Side of Break on 6 in. RWCU (1) – 5SX/SXL - El. 557 ft 6 in., Room R510
3.6-102	Thrust Versus Time - Downstream Side of Break on 6 in. RWCU (2) – 5SX/SXL - El. 557 ft 6 in., Room R510
3.6-103	Deleted
3.6-104	Thrust Versus Time - Upstream Side of Break on 4 in. AS (11) - 2 - El. 472 ft 0 in., Room R206
3.6-105	Thrust Versus Time - Upstream Side of Break on 4 in. HS (1) - 2 - El. 574.5 ft 0 in., Room R604
3.6-106	Coefficients for Moment of Inertia of Cracked Sections
3.7-1	Response Spectra Safe Shutdown Earthquake - Horizontal Component
3.7-2	Response Spectra Safe Shutdown Earthquake - Vertical Component
3.7-3	Response Spectra Operating Basis Earthquake - Horizontal Component

Chapter 3

DESIGN CRITERIA - STRUCTURES, COMPONENTS, EQUIPMENT, AND SYSTEMS

LIST OF FIGURES (Continued)

Number	Title
3.7-4	Response Spectra Operating Basis Earthquake - Vertical Component
3.7-5	Synthetic Time History of Ground Motion Acceleration - Duration = 15 Sec OBE - Horizontal Component
3.7-6	Ground Spectrum - Comparison Between Design and Synthetic Time History Response Spectra (Damping 0.005)
3.7-7	Ground Spectrum- Comparison Between Design and Synthetic Time History Response Spectra (Damping 0.020)
3.7-8	Ground Spectrum - Comparison Between Design and Synthetic Time History Response Spectra (Damping 0.050)
3.7-9	Ground Spectrum - Comparison Between Design and Synthetic Time History Response Spectra (Damping 0.070)
3.7-10	Ground Spectrum - Comparison Between Design and Synthetic Time History Response Spectra (Damping 0.100)
3.7-11	Reactor Building - Seismic Analysis Summary of Horizontal Natural Frequencies and Mode Shapes
3.7-12	Reactor Building Refueling Floor Response Spectrum - Operating Basis Earthquake, 0.005 Damping, Horizontal NS and EW
3.7-13	Mathematical Model of Reactor Building - Horizontal and Vertical Input Motion (Sheets 1 and 2)
3.7-14	Reactor Pressure Vessel and Internals Seismic Model
3.7-15	Reactor Building Refueling Floor Response Spectrum - Operating Basis Earthquake, 0.005 Damping, Vertical
3.7-16	Reactor Building Refueling Floor Response Spectrum - Safe Shutdown Earthquake, 0.01 Damping, Horizontal NS and EW

Chapter 3

DESIGN CRITERIA - STRUCTURES, COMPONENTS, EQUIPMENT, AND SYSTEMS

LIST OF FIGURES (Continued)

Number	Title
3.7-17	Reactor Building Refueling Floor Response Spectrum - Safe Shutdown Earthquake, 0.01 Damping, Vertical
3.7-18	Reactor Building Mat Response Spectrum - Operating Basis Earthquake, 0.005 Damping, Horizontal NS and EW
3.7-19	Reactor Building Mat Response Spectrum - Operating Basis Earthquake, 0.005 Damping, Vertical
3.7-20	Reactor Building Mat Response Spectrum - Safe Shutdown Earthquake, 0.01 Damping, Horizontal NS and EW
3.7-21	Reactor Building Mat Response Spectrum - Safe Shutdown Earthquake, 0.01 Damping, Vertical
3.7-22	Reactor Building - Seismic Analysis Comparison of Responses
3.8-1	Primary and Secondary Containment Structure
3.8-2	Reactor Building
3.8-3	Drywell Floor Peripheral Seal, Circular Flanged Girder, Shear Lugs, Jet Deflectors
3.8-4	Dyplas Model - Finite Element for Run No. 2 (Sheets 1 and 2)
3.8-5	Minimum Total Elongation Structural Materials, Carbon Steels, Medium Carbon Steels
3.8-6	Formwork for Separation System Between Containment Vessel and Biological Shield Wall
3.8-7	Class I N2 System for Containment Vacuum Breaker Valves

Chapter 3

DESIGN CRITERIA - STRUCTURES, COMPONENTS, EQUIPMENT, AND SYSTEMS

LIST OF FIGURES (Continued)

Number	Title
3.8-8	Containment Vacuum Breaker Butterfly Valves
3.8-9	DELETED
3.8-10	Primary Containment Vessel Personnel Access Lock, Sectional El., Penetration X-16
3.8-11	Primary Containment Vessel Personnel Access Lock, Sections A-A and B-B
3.8-12	Primary Containment Vessel Personnel Access Lock, Sections C-C and D-D
3.8-13	Personnel Access Airlock - Door Seal Vacuum Relief Tube and Test Connection
3.8-14	Personnel Access Airlock - Typical Bulkhead Mechanical Penetration
3.8-15	Personnel Access Airlock - Typical Bulkhead Mechanical Penetration Seal
3.8-16	Personnel Access Airlock - Typical Bulkhead Electrical Penetration
3.8-17	Reactor Pedestal and Drywell Floor Structural System and Support Elements
3.8-18	Reactor Pedestal
3.8-19	Primary Containment Vessel Drywell Floor Downcomer Vent Pipes
3.8-20	Primary Containment Vessel Radial Beam Framing Systems
3.8-21	Primary Containment Vessel Radial Beam Framing Systems
3.8-22	Primary Containment Vessel Radial Beam Framing Systems
3.8-23	Primary Containment Vessel Radial Beam Framing Systems
3.8-24	Structural Reactor Building Stabilizers and Miscellaneous Details

Chapter 3

DESIGN CRITERIA - STRUCTURES, COMPONENTS, EQUIPMENT, AND SYSTEMS

LIST OF FIGURES (Continued)

Number	Title
3.8-25	Primary Containment Vessel Stabilizer
3.8-26	Primary Containment Vessel Drywell Refueling Bellows Seal
3.8-27	Reactor Building Floor - El. 501 ft 0 in. - Typical Floor
3.8-28	Structural Reactor Building El. 522 ft 0 in. Plan
3.8-29	Reactor Building Main Steam Tunnel
3.8-30	Reactor Building Main Steam Tunnel
3.8-31	Reactor Building Fuel Storage Pool
3.8-32	Reactor Building Dryer and Separator Storage Pool
3.8-33	Reactor Building Refueling Floor - El. 606 ft 10-1/2 in.
3.8-34	Reactor Building Reinforced-Concrete Column Schedule
3.8-35	Structural Reactor Building Exterior Walls
3.8-36	Reactor Building Exterior Walls
3.8-37	Structural Reactor Building Biological Shield Wall
3.8-38	Reactor Building Equipment Foundations
3.8-39	Reactor Building Roof Plan
3.8-40	Reactor Building Crane Runway and Column Base Details
3.8-41	Reactor Building Crane Girder and Column Details
3.8-42	Radwaste and Control Building

Chapter 3

DESIGN CRITERIA - STRUCTURES, COMPONENTS, EQUIPMENT, AND SYSTEMS

LIST OF FIGURES (Continued)

Number	Title
3.8-43	Structural Reactor Building Foundation Plan - El. 422 ft 3 in.
3.8-44	Reactor Building Crane Tornado Latches and Racks
3.8-45	Reactor Building Main Steam Tunnel
3.8-46	Reactor Building Main Steam Tunnel
3.8-47	Reactor Building Roof Masts
3.8-48	Reactor Building Roof Masts
3.8-49	Fresh Air Intake Structures Numbers 1 and 2
3.8-50	Pipe Penetration Flexible Watertight Closure Boot
3.8-51	Primary Containment Vessel Penetration Schedule
3.8-52	Primary Containment Vessel Penetration Schedule
3.8-53	Structural Containment Vessel
3.8-54	Primary Containment Vessel Penetration Assembly - Type 1 Pipe
3.8-55	Primary Containment Vessel Penetration Assembly - Types 2 and 3 Pipe
3.8-56	Primary Containment Vessel Penetration Assembly - Type 4 Electrical Canister Type
3.8-57	Primary Containment Vessel Penetration Assembly - Type 4 Electrical Non-Canister Type
3.8-58	Primary Containment Vessel Penetration Assembly - Types 5, 6, and 7 Instrumentation

Chapter 3

DESIGN CRITERIA - STRUCTURES, COMPONENTS, EQUIPMENT, AND SYSTEMS

LIST OF FIGURES (Continued)

Number	Title
3.8-59	Primary Containment Vessel Suppression Chamber Access Hatch
3.8-60	Primary Containment Vessel Equipment Hatch and CRD Removal Hatch
3.8-61	Primary Containment Vessel Radial Beam Framing Systems
3.8-62	Underground Pipe Penetration Flexible Watertight Closure Boot
3.9-1	Typical Relief Valve Transient
3.9-2	Reactor Internals Flow Paths
3.9-3	Fuel Support Pieces
3.9-4	Jet Pump
3.9-5	Pressure Nodes Used for Depressurization Analysis
3.10-1	Typical Vertical Board
3.10-2	Typical Instrument Rack
3.10-3	Typical Local Rack
3.10-4	Typical NEMA Type 12 Enclosure
3.10B-1	Maximum Safe Weight per Bolt for Standard Enclosure as a Function of the Height of the Center of Gravity
3.10C-1	Corner Post
3.10C-2	Plan View of Panel
3.10C-3	Barrier with Two End Plates

Chapter 3

DESIGN CRITERIA - STRUCTURES, COMPONENTS, EQUIPMENT, AND SYSTEMS

LIST OF FIGURES (Continued)

Number	Title
3.10C-4	Panel Deflections
3.10C-5	Top Frame Deflection
3.11-1	Primary Containment Zones
3.11-2	Equipment Qualification Report - Reactor Building Return Air
3.12-1	Computer Program AX2 - Verification Model
3.12-2	Normal AX2/BOSOR 4 Verification Problem
3.12-3	Tangential AX2/BOSOR 4 Verification Problem
3.12-4	Isofinite Grid for Flued Head X2

Chapter 3

DESIGN CRITERIA - STRUCTURES, COMPONENTS, EQUIPMENT, AND SYSTEMS

3.1 CONFORMANCE WITH NRC GENERAL DESIGN CRITERIA

3.1.1 SUMMARY DESCRIPTION

This section contains an evaluation of the design bases of the Energy Northwest Nuclear Project No. 2 (Columbia Generating Station (CGS)) nuclear generating station as compared to the NRC General Design Criteria (GDC) for Nuclear Power Plants, Appendix A of 10 CFR Part 50, effective May 21, 1971, and subsequently amended on July 7, 1971. The GDC, which are divided into six groups and total 55 in number, are intended to establish minimum requirements for the design of nuclear power plants.

The GDC were not written specifically for the boiling water reactor (BWR); rather, they were intended to guide the design of all water-cooled nuclear power plants. As a result, the criteria are generic in nature and subject to interpretation. For this reason, there are some cases where conformance to a particular criterion is not directly comparable. In these cases, the conformance of plant design to the interpretation of the criterion is discussed. For each of the 55 criteria, a specific assessment of the plant design is made, and a complete list of section references are included to identify where detailed design information pertinent to each criterion is discussed.

Based on the content herein, Energy Northwest concludes that CGS is in compliance with the GDC.

3.1.2 CRITERION CONFORMANCE

3.1.2.1 Group I - Overall Requirements

3.1.2.1.1 Criterion 1 - Quality Standards and Records

> Structures, systems, and components important to safety shall be designed, fabricated, erected, and tested to quality standards commensurate with the importance of the safety functions to be performed. Where generally recognized codes and standards are used, they shall be identified and evaluated to determine their applicability, adequacy, and sufficiency and shall be supplemented or modified as necessary to assure a quality product in keeping with the required safety function. A quality assurance program shall be established and implemented in order to provide adequate assurance that these structures, systems, and components will satisfactorily perform their safety

functions. Appropriate records of the design, fabrication, erection, and testing of structures, systems, and components important to safety shall be maintained by, or under the control of, the nuclear power unit licensee throughout the life of the unit (GDC 1).

Evaluation Against Criterion 1

Structures, systems, and components important to safety are identified in Section 3.2. The quality assurance program used during the operations phase is described in EN-QA-004, Energy Northwest Operational Quality Assurance Program Description. The quality assurance program used during the design and construction of the plant was provided at the Preliminary Safety Analysis Report (PSAR) stage and has been applied to the items contained in Table 3.2-1. The intent of the quality assurance program is to ensure sound engineering in all phases of design and construction through conformity to regulatory requirements and design bases described in the license application. In addition, the program ensures adherence to specified standards of workmanship and implementation of recognized codes and standards in fabrication and construction. It also includes the observance of proper preoperational and operational testing and maintenance procedures as well as keeping appropriate records. The total quality assurance program of Energy Northwest and its principal contractors is responsive to and satisfies the quality-related requirements of 10 CFR Part 50, including Appendix B.

Structures, systems, and components are first classified in Section 3.2 with respect to their location and service and their relationship to the safety function to be performed. Recognized codes and standards are applied to the equipment to ensure a quality product in keeping with the required safety function. In cases where codes are not available or the existing code must be modified, an explanation is provided.

Documents are maintained which demonstrate that the requirements of the quality assurance program are being satisfied. This documentation shows that appropriate codes, standards, and regulatory requirements are observed, specified materials are used, correct procedures are utilized, qualified personnel are provided, and that the finished parts and components meet the applicable specifications for safe and reliable operation. These records are available so that any desired item of information is retrievable for reference. These records will be maintained in accordance with the Operational Quality Assurance Program Description.

The detailed quality assurance program developed by the applicant and its contractors satisfies the requirements of Criterion 1.

For further discussion see the following sections:

a. Principal design criteria 1.2

b. Plant description 1.2

c. Classification of structures, components, and systems 3.2

d. Quality assurance 17

3.1.2.1.2 Criterion 2 - Design Bases for Protection Against Natural Phenomena

Structures, systems, and components important to safety shall be designed to withstand the effects of natural phenomena such as earthquakes, tornadoes, hurricanes, floods, tsunami, and seiches without loss of capability to perform their safety functions. The design bases for these structures, systems, and components shall reflect: (1) appropriate consideration of the most severe of natural phenomena that have been historically reported for the site and surrounding area, with sufficient margin for the limited accuracy, quantity, and period of time in which the historical data have been accumulated, (2) appropriate combinations of the effects of normal and accident conditions with the effects of the natural phenomena, and (3) the importance of the safety functions to be performed (GDC 2).

Evaluation Against Criterion 2

The design criteria adopted for structures, systems, and components considers the magnitude and the probability of occurrence of natural phenomena at the specific site. The designs are based on the most severe natural phenomena recorded for the site with an appropriate margin to account for uncertainties in the historical data. Detailed discussion of the various phenomena considered and the design criteria developed are presented in the sections listed below.

The design criteria developed meet the requirements of Criterion 2.

For further discussion, see the following sections:

a. Meteorology 2.3

b. Hydrologic engineering 2.4

c. Geology and seismology 2.5

d. Classification of structures, components, and systems 3.2

e. Wind and tornado design loadings 3.3

f. Water level (flood) design 3.4

g.	Missile protection	3.5
h.	Seismic design	3.7
i.	Design of Seismic Category I structures	3.8
j.	Mechanical systems and components	3.9
k.	Seismic qualification of Category I instrumentation and electrical equipment	3.10
l.	Environmental design of mechanical and electrical equipment	3.11

3.1.2.1.3 Criterion 3 - Fire Protection

Structures, systems, and components important to safety shall be designed and located to minimize, consistent with other safety requirements, the probability and effect of fires and explosions. Noncombustible and heat resistant materials shall be used wherever practical throughout the unit, particularly in locations such as the containment and control room. Fire detection and fighting systems of appropriate capacity and capability shall be provided and designed to minimize the adverse effect of fires on structures, systems, and components important to safety. Firefighting systems shall be designed to assure that their rupture or inadvertent operation does not significantly impair the safety capability of these structures, systems, and components (GDC 3).

Evaluation Against Criterion 3

Insurer and National Fire Protection Association guidelines were used for the design of the plant.

Noncombustible and fire resistant materials are used wherever practical throughout the facility, particularly in areas containing critical portions of the plant such as containment structure, control room, and components of systems important to safety. These systems are designed and located to minimize the effects of fires or explosions on their redundant components. Facilities for the storage of combustible materials such as fuel oil are located, designed, and protected to minimize both the probability and the effects of a fire.

Equipment and facilities for detecting, annunciating, and extinguishing fires are provided to protect both plant and personnel from fire or explosion.

Administrative controls are utilized where applicable throughout the facility to minimize the probability and consequences of fires and explosions.

The fire protection system is designed such that a failure of any component of the system will not

a. Generate an accident resulting in significant release of radioactivity to the environment, or

b. Impair the ability of redundant equipment to safely shut down and isolate the reactor or limit the release of radioactivity to the environment in the event of a loss-of-coolant accident (LOCA).

For further discussion, see the following sections:

a.	Design of Seismic Category I structures	3.8
b.	Fire protection system	9.5.1, Appendix F

3.1.2.1.4 Criterion 4 - Environmental and Missile Design Bases

> Structures, systems, and components important to safety shall be designed to accommodate the effects of and to be compatible with the environmental conditions associated with normal operation, maintenance, testing, and postulated accidents, including loss-of-coolant accidents. These structures, systems, and components shall be appropriately protected against dynamic effects, including the effects of missiles, pipe whipping, and discharging fluids, that may result from equipment failures and from events and conditions outside the nuclear power unit (GDC 4).

Evaluation Against Criterion 4

Structures, systems, and components important to safety are designed to accommodate the effects of and to be compatible with the environmental conditions associated with normal operation, maintenance, testing, and postulated accidents, including LOCAs. (See Section 3.11.)

These structures, systems, and components are appropriately protected against dynamic effects including the effects of missiles, pipe whipping, and discharging fluids that may result from equipment failures.

The electrical equipment, instrumentation, and associated cables of protection and engineered safety features (ESF) system which are located inside the containment are discussed in the

sections listed below. The design requirements in terms of the time that each must survive the extreme environmental conditions following a LOCA are indicated.

The design of these structures, systems, and components meets the requirements of Criterion 4.

For further discussion, see the following sections:

a.	Classification of structures, components, and systems	3.2
b.	Missile protection	3.5
c.	Protection against dynamic effects associated with the postulated rupture of piping	3.6
d.	Design of Seismic Category I structures	3.8
e.	Mechanical system and components	3.9
f.	Environmental design of mechanical and electrical equipment	3.11
g.	Integrity of reactor coolant pressure boundary (RCPB)	5.2
h.	ESF	6
i.	Instrumentation and controls	7
j.	Electric power	8

3.1.2.1.5 Criterion 5 - Sharing of Structures, Systems, and Components

Structures, systems, and components important to safety shall not be shared among nuclear power units unless it can be shown that such sharing will not significantly impair their ability to perform their safety functions, including, in the event of an accident in one unit, an orderly shutdown and cooldown of the remaining units (GDC 5).

Evaluation Against Criterion 5

CGS is a single unit plant, and therefore Criterion 5 does not apply.

3.1.2.2 Group II - Protection by Multiple Fission Product Barriers

3.1.2.2.1 Criterion 10 - Reactor Design

> The reactor core and associated coolant, control, and protection systems shall be designed with appropriate margin to assure that specified acceptable fuel design limits are not exceeded during any condition of normal operation, including the effects of anticipated operational occurrences (GDC 10).

Evaluation Against Criterion 10

The reactor core components consist of fuel assemblies, control rods, in-core ion chambers, neutron sources, and related items. The mechanical design is based on conservative application of stress limits, operating experience, and experimental test results. The fuel is designed to maintain integrity over a complete range of power levels including transient conditions. The core is sized with sufficient heat transfer area and coolant flow to ensure that fuel design limits are not exceeded under normal conditions or anticipated operational occurrences.

The reactor protection system (RPS) is designed to monitor certain reactor parameters, sense abnormalities, and to scram the reactor thereby preventing fuel design limits from being exceeded. Scram trip setpoints are selected on operating experience and by the safety design basis. There is no case in which the scram trip setpoints allow the core to exceed the thermal hydraulic safety limits. Power for the RPS is supplied by two independent ride-through ac power supplies. An alternate power source is available for each bus.

An analysis and evaluation has been made of the effects on core fuel following adverse plant operating conditions. The results of abnormal operational transients are presented in Chapter 15 and show that the minimum critical power ratio (MCPR) does not fall below the transient MCPR limit, thereby satisfying the transient design basis.

The reactor core and associated coolant, control, and protection systems are designed to ensure that the specified fuel design limits are not exceeded during the conditions of normal or abnormal operation and therefore meet the requirements of Criterion 10.

For further discussion, see the following sections:

a.	Principal design criteria	1.2.1
b.	Plant description	1.2.2
c.	Fuel system design	4.2

d.	Nuclear design	4.3
e.	Thermal and hydraulic design	4.4
f.	Reactor materials	4.5
g.	Functional design of reactivity control systems	4.6
h.	Reactor coolant system and connected systems	5
i.	Reactor trip system	7.2
j.	Accident analyses	15

3.1.2.2.2 Criterion 11 - Reactor Inherent Protection

The reactor core and associated coolant systems shall be designed so that in the power operating range the net effect of the prompt inherent nuclear feedback characteristics tends to compensate for a rapid increase in reactivity (GDC 11).

Evaluation Against Criterion 11

The reactor core is designed to have a reactivity response that regulates or damps changes in power level and spatial distributions of power production to a level consistent with safe and efficient operation.

The inherent dynamic behavior of the core is characterized in terms of the fuel temperature or doppler coefficient, the moderator void coefficient, and the moderator temperature coefficient. The combined effect of these coefficients in the power range is termed the power coefficient.

Doppler reactivity feedback occurs simultaneously with a change in fuel temperature and opposes the power change that caused it; this contributes to system stability. Since the doppler reactivity opposes load changes, it is desirable to maintain a large ratio of moderator void coefficient to doppler coefficient for optimum load-following capability. The BWR has an inherently large moderator-to-doppler coefficient ratio which permits the use of the coolant flow rate for load following.

In a BWR, the moderator void coefficient is of importance during operation at power. Nuclear design requires the void coefficient inside the fuel channel to be negative. The negative void reactivity coefficient provides an inherent negative feedback during power transients. Because of the large negative moderator coefficient of reactivity, the BWR has a number of inherent advantages, such as the use of coolant flow as opposed to control rods for

load following, inherent self-flattening of the radial power distribution, ease of control, and spatial xenon stability.

The reactor is designed so that the moderator temperature coefficient is small and positive in the cold condition; however, the overall power reactivity coefficient is negative. Typically, the power coefficient at full power is about -0.04 $\Delta k/k/\Delta P/P$ at the beginning of life and about -0.3 $\Delta k/k/\Delta P/P$ at 10,000 MWd/t. These values are well within the range required for adequate damping of power and spatial xenon disturbances.

The reactor core and associated coolant system are designed so that in the power operating range prompt inherent dynamic behavior tends to compensate for any rapid increase in reactivity in accordance with Criterion 11.

For further discussion, see the following sections:

a. Principal design criteria 1.2

b. Nuclear design 4.3

c. Thermal and hydraulic design 4.4

3.1.2.2.3 Criterion 12 - Suppression of Reactor Power Oscillations

The reactor core and associated coolant, control, and protection systems shall be designed to assure that power oscillations which can result in conditions exceeding specified acceptable fuel design limits are not possible or can be reliably and readily detected and suppressed (GDC 12).

Evaluation Against Criterion 12

The reactor core is designed to ensure that no power oscillation will cause fuel design limits to be exceeded. The power reactivity coefficient is the composite simultaneous effect of the fuel temperature or doppler coefficient, moderator void coefficient, and moderator temperature coefficient to a change in power level. It is negative and well within the range required for adequate damping of power and spatial xenon disturbances. Analytical studies indicate that for large BWRs, under-damped, unacceptable power disturbance behavior could only be expected to occur with power coefficients more positive than about -0.01 $\Delta k/k/\Delta P/P$. Operating experience has shown large BWRs to be inherently stable against xenon-induced power instability. The large negative operating coefficients provide

a. Good load following with well-damped behavior and little undershoot or overshoot in the heat transfer response,

b. Load following with recirculation flow control, and

c. Strong damping of spatial power disturbances.

The RPS design provides protection from excessive fuel cladding temperatures and protects the RCPB from excessive pressures that threaten the integrity of the system. Local abnormalities are sensed, and if protection system limits are reached, corrective action is initiated through an automatic scram. Integrity of the protection system is achieved through the combination of logic arrangement, trip channel redundancy, power supply redundancy, and physical separation.

The reactor core and associated coolant, control, and protection systems are designed to suppress any power oscillations which could result in exceeding fuel design limits. These systems ensure that Criterion 12 is met.

For further discussion, see the following sections:

a.	Principal design criteria	1.2
b.	Reactivity control systems	4.1
c.	Nuclear design	4.3
d.	Thermal and hydraulic design	4.4
e.	Functional design of reactivity control systems	4.6
f.	Overpressurization protection	5.2.2
g.	Reactor trip system	7.2
h.	Reactor manual control system instrumentation and control	7.7
i.	Accident analyses	15

3.1.2.2.4 Criterion 13 - Instrumentation and Control

Instrumentation shall be provided to monitor variables and systems over their anticipated ranges for normal operation, for anticipated operational occurrences, and for accident conditions as appropriate to assure adequate safety, including those variables and systems that can affect the fission process, the integrity of the reactor core, the reactor coolant pressure boundary, and the containment and

its associated systems. Appropriate controls shall be provided to maintain these variables and systems within prescribed operating ranges (GDC 13).

Evaluation Against Criterion 13

The fission process is monitored and controlled for all conditions from source range through power operating range. The intermediate and power ranges of the neutron monitoring system detect core conditions that threaten the overall integrity of the fuel barrier due to excess power generation and provide a signal to the RPS. Fission detectors, located in the core, are used for neutron detection. The detectors are located to provide optimum monitoring in the intermediate and power ranges.

The intermediate range monitors (IRM) measure neutron flux from the upper portion of the source range monitors (SRM) to the lower portion of the local power range monitor (LPRM) subsystem. The IRM is capable of generating a trip signal to scram the reactor.

The LPRM subsystem consists of fission chambers located throughout the core, signal conditioning equipment, and trip functions. Local power range monitor signals are also used to block rod withdrawal and to generate the necessary trip signal for reactor scram [average power range monitor (APRM)].

The RPS protects the fuel barriers and the nuclear process barrier by monitoring plant parameters and causing a reactor scram when predetermined setpoints are exceeded. Separation of the scram and normal rod control function prevents failures in the reactor manual control circuitry from affecting the scram circuitry.

To provide protection against the consequences of accidents involving the release of radioactive materials from the fuel and RCPB, the containment and reactor vessel isolation control system initiates automatic isolation of appropriate pipelines whenever monitored variables exceed preselected operational limits.

Nuclear system leakage limits are established so that appropriate action can be taken to ensure the integrity of the RCPB. Nuclear system leakage rates are classified as identified and unidentified, which corresponds respectively to the flow to the equipment drain and floor drain sumps. The permissible total leakage rate limit to these sumps is based on the makeup capabilities of various reactor component systems. Flow integrator and recorders are used to determine the leakage flow pumped from the drain sumps. The unidentified leakage rate as established in Section 5.2.5 is less than the value that has been conservatively calculated to be a minimum leakage from a crack large enough to propagate rapidly, but which still allows time for identification and corrective action before the integrity of the process barrier is threatened.

The process radiation monitoring system monitors radiation levels of various processes and provides trip signals to the containment and reactor vessel isolation control system whenever preestablished limits are exceeded.

As noted above, adequate instrumentation is provided to monitor system variables in the reactor core, RCPB, and reactor containment. Appropriate controls are provided to maintain the variables in the operating range and to initiate the necessary corrective action in the event of abnormal operational occurrence or accident. These instrumentation and controls meet the requirements of Criterion 13.

For further discussion, see the following sections:

a.	Principal design criteria	1.2
b.	Functional design of reactivity control systems	4.6
c.	Detection of leakage through RCPB	5.2.5
d.	Main steam line isolation system	5.4.5
e.	Containment systems	6.2
f.	Primary containment and reactor vessel isolation control system instrumentation and control	7.1
g.	Reactor trip system	7.2
h.	ESF systems	7.3
i.	Systems required for safe shutdown	7.4
j.	Safety-related display instrumentation	7.5
k.	All other instrumentation systems required for safety	7.6
l.	Control systems not required for safety	7.7

3.1.2.2.5 Criterion 14 - Reactor Coolant Pressure Boundary

The reactor coolant pressure boundary shall be designed, fabricated, erected, and tested so as to have an extremely low probability of abnormal leakage, of rapidly propagating failure, and of gross rupture (GDC 14).

Evaluation Against Criterion 14

The piping and equipment pressure parts within the RCPB through the outer isolation valves are designed, fabricated, erected, and tested to provide a high degree of integrity throughout the plant lifetime. Section 3.2 classifies systems and components within the RCPB to Quality Group A Requirements. The design requirements and codes and standards applied to this quality group ensure a quality product in keeping with the safety functions to be performed.

To minimize the possibility of brittle fracture within the RCPB, the fracture toughness properties and the operating temperature of ferritic materials are controlled to ensure adequate toughness. Section 5.2.3 describes the methods used to control toughness properties. Materials are impact tested in accordance with ASME Code Section III, where applicable. Where RCPB piping penetrates the containment, the fracture toughness temperature requirements of the RCPB materials apply.

Piping and equipment pressure parts of the RCPB are assembled and erected by welding unless applicable codes permit flanged or screwed joints. Welding procedures are employed which produce welds of complete fusion and free of unacceptable defects. All welding procedures, welders, and welding machine operators used in producing pressure-containing welds are qualified in accordance with the requirements of ASME Code Section IX, for the materials to be welded. Qualification records including the results of procedure and performance qualification tests and identification symbols assigned to each welder are maintained.

Section 5.2 contains the detailed materials and examination requirements for the piping and equipment of the RCPB prior to and after its assembly and erection. Leakage testing and surveillance is accomplished as described in the evaluation against Criterion 30 of the GDC.

The design, fabrication, erection, and testing of the RCPB ensure an extremely low probability of failure or abnormal leakage, thus satisfying the requirements of Criterion 14.

For further discussion, see the following sections:

a.	Principal design criteria	1.2
b.	Design of structures, components, equipment, and systems	3
c.	Integrity of RCPB	5.2
d.	Overpressurization protection	5.2.2
e.	Reactor vessel	5.3

f. Reactor coolant piping 5.4.3

g. Reactor trip system 7.2

h. Accident analyses 15

3.1.2.2.6 Criterion 15 - Reactor Coolant System Design

The reactor coolant system and associated auxiliary, control, and protection systems shall be designed with sufficient margin to assure that the design conditions of the reactor coolant pressure boundary are not exceeded during any condition of normal operation, including anticipated operational occurrences (GDC 15).

Evaluation Against Criterion 15

The reactor coolant system consists of the reactor vessel and appurtenances, the reactor recirculation system, the nuclear system pressure relief system, the main steam lines, the reactor core isolation cooling (RCIC) system, and the residual heat removal (RHR) system.

These systems are designed, fabricated, erected, and tested to stringent quality requirements and appropriate codes and standards that ensure the integrity of the RCPB throughout the plant lifetime. The reactor coolant system was designed and fabricated to meet the requirements of the ASME Code Section III, as indicated in Section 5.2.1.

The auxiliary, control, and protection systems associated with the reactor coolant system act to provide sufficient margin to ensure that the design conditions of the RCPB are not exceeded during any condition of normal operation, including anticipated operational occurrences. As described in the evaluation of Criterion 13, instrumentation is provided to monitor essential variables to ensure that they are within prescribed operating limits. If the monitored variables exceed their predetermined settings, the auxiliary, control, and protection systems automatically respond to maintain the variables and systems within allowable design limits.

An example of the integrated protective action scheme, which provides sufficient margin to ensure that the design conditions of the RCPB are not exceeded, is the automatic initiation of the nuclear system pressure relief system on receipt of an overpressure signal. To accomplish overpressure protection, a number of pressure-operated relief valves are provided that can discharge steam from the nuclear system to the suppression pool. The nuclear system pressure relief system also provides for automatic depressurization of the nuclear system in the event of a LOCA in which the vessel is not depressurized by the accident. The depressurization of the nuclear system in this situation allows operation of the low-pressure emergency core cooling system (ECCS) to supply enough cooling water to adequately cool the core. In a similar manner, other auxiliary, control, and protection systems provide assurance that the design

conditions of the RCPB are not exceeded during any conditions of normal operation, including anticipated operational occurrences.

The application of appropriate codes and standards and high quality requirements to the reactor coolant system and the design features of its associated auxiliary, control, and protection systems ensure that the requirements of Criterion 15 are satisfied.

For further discussion, see the following sections:

a.	Principal design criteria	1.2
b.	Design of structures, components, equipment, and systems	3
c.	Integrity of RCPB	5.2
d.	Overpressurization protection	5.2.2
e.	Detection of leakage through the reactor coolant pressure boundary	5.2.5
f.	Reactor vessel	5.3
g.	Reactor coolant piping	5.4
h.	Reactor trip system	7.2
i.	Accident analyses	15

3.1.2.2.7 Criterion 16 - Containment Design

> Reactor containment and associated systems shall be provided to establish an essentially leak-tight barrier against the uncontrolled release of radioactivity to the environment and to assure that the containment design conditions important to safety are not exceeded for as long as postulated accident conditions require (GDC 16).

Evaluation Against Criterion 16

An essentially leaktight barrier is provided by a steel primary containment consisting of a drywell and suppression chamber and a containment isolation system. Release of radioactivity from the primary containment to the environment is further controlled by the reactor building, which provides secondary containment, and the standby gas treatment system (SGTS). These

systems are designed to protect the public from the consequences of a LOCA, based on a postulated break of the reactor coolant piping up to and including a double-ended break of the largest reactor coolant pipe.

The primary containment, reactor building, and the associated ESF systems are designed to safely sustain all internal and external environmental conditions that may be postulated to occur during the life of the plant, including both short- and long-term effects following a LOCA.

Containment temperature and pressure following an accident are limited by the suppression pool and the RHR system.

For further discussion, see the following sections:

a.	General plant description	1.2
b.	Steel containment	3.8
c.	Containment systems	6.2
d.	Accident analyses	15

3.1.2.2.8 Criterion 17 - Electric Power Systems

An onsite electric power system and an offsite electric power system shall be provided to permit functioning of structures, systems, and components important to safety. The safety function for each system (assuming the other system is not functioning) shall be to provide sufficient capacity and capability to assure that (1) specified acceptable fuel design limits and design conditions of the reactor coolant pressure boundary are not exceeded as a result of anticipated operational occurrences and (2) the core is cooled and containment integrity and other vital functions are maintained in the event of postulated accidents.

The onsite electric power supplies, including the batteries, and the onsite electric distribution system, shall have sufficient independence, redundancy, and testability to perform their safety functions assuming a single failure.

Electric power from the transmission network to the onsite electric distribution system shall be supplied by two physically independent circuits (not necessarily on separate rights of way) designed and located so as to minimize to the extent practical the likelihood of their simultaneous failure under operating and postulated accident and environmental conditions. A switchyard common to both circuits is acceptable. Each of these circuits shall be designed to be

available in sufficient time following a loss of all onsite alternating current power supplies and the other offsite electric power circuit, to assure that specified acceptable fuel design limits and design conditions of the reactor coolant pressure boundary are not exceeded. One of these circuits shall be designed to be available to assure that core coolant, primary containment integrity, and other vital safety functions are maintained.

Provisions shall be included to minimize the probability of losing electric power from any of the remaining supplies as a result of, or coincident with, the loss of power generated by the nuclear power unit, the loss of power from the transmission network, or the loss of power from the onsite electric power supplies (GDC 17).

Evaluation Against Criterion 17

Offsite power is transmitted to the plant transformer yard by two physically independent transmission lines which approach the plant along separate rights-of-way. Offsite power is available for plant startup or shutdown utilizing the 230-kV startup transformer. This transformer has sufficient capacity to carry all plant normal loads, in addition to those ESF loads required for plant shutdown or mitigation of the consequences of an accident.

A 115-kV transmission line, located on a separate right-of-way, provides power to a backup transformer which is capable of providing power for the plant safety-related systems to mitigate the effects of an accident. This power source is automatically transferred to the plant safety-related system on loss of all other offsite power sources.

The three independent onsite ac load groups provide independence and redundancy of equipment function. They meet the safety requirements assuming a single failure since the load groups are connected to offsite power by circuits having independent routes from the Class 1E switchgear.

For each of the three ac load groups there are independent batteries that furnish dc load and control power for the corresponding divisions.

The reactor protection instrumentation is powered from two independent ride-through ac power sources.

During normal plant operation, the station auxiliary power is supplied from the main generator through the plant auxiliary transformers. On loss of power from the normal auxiliary transformers, there will be an automatic transfer to a source of offsite power from the 230-kV startup or 115-kV backup transformers. In the event of a loss of the 230-kV and 115-kV offsite power sources, three onsite diesel generator sets and redundant sets of station batteries provide the necessary ac and dc power for safe shutdown or, in the event of an accident, to

restrict the consequences to within acceptable limits. The onsite emergency ac and dc power systems contain sufficient redundancy and independence such that a single failure does not prevent the systems from performing their safety function.

The power systems as designed meet the requirements of Criterion 17.

For further discussion, see the following sections:

a.	General plant description	1.2
b.	Seismic qualification of Seismic Category I instrumentation and electrical equipment	3.10
c.	Environmental design of mechanical and electrical equipment	3.11
d.	Electric power	8

3.1.2.2.9 Criterion 18 - Inspection and Testing of Electric Power Systems

> Electric power systems important to safety shall be designed to permit appropriate periodic inspection and testing of important areas and features, such as wiring, insulation, connections, and switchboards, to assess the continuity of the systems and the condition of their components. The systems shall be designed with a capability to test periodically (1) the operability and functional performance of the components of the systems, such as onsite power sources, relays, switches, and buses, and (2) the operability of the systems as a whole and, under conditions as close to design as practical, the full operation sequence that brings the systems into operation, including operation of applicable portions of the protection system, and the transfer of power among the nuclear power unit, the offsite power system, and the onsite power system (GDC 18).

Evaluation Against Criterion 18

The engineered safety systems power supply buses and associated diesel generators are arranged for periodic inspection and testing of each diesel generator independently.

At periodic intervals when the reactor is not at power operation, tests simulating loss of power and accident signals will be initiated to demonstrate the capability of the power systems to meet the starting and loading requirements.

Periodically during plant operation each diesel generator will be manually started and loaded. The redundant (Division 1 and 2) units will be synchronized to the startup power source and

loaded. The high-pressure core spray (HPCS) (Division 3) unit will be loaded by synchronizing to the startup power source.

These tests are designed to prove the operability of the onsite power system under conditions as close to design as possible, to assess the continuity of the systems and condition of the components.

The electrical power systems are configured to provide access for appropriate periodic inspection. For further discussion, see the following sections:

a. Onsite power systems 8.3

b. Initial test program 14

3.1.2.2.10 Criterion 19 - Control Room

A control room shall be provided from which actions can be taken to operate the nuclear power unit safely under normal conditions and to maintain it in a safe condition under accident conditions, including loss-of-coolant accidents. Adequate radiation protection shall be provided to permit access and occupancy of the control room under accident conditions without personnel receiving radiation exposures in excess of 5 rem whole body, or its equivalent to any part of the body, for the duration of the accident.

Equipment at appropriate locations outside the control room shall be provided (1) with a design capability for prompt hot shutdown of the reactor, including necessary instrumentation and controls to maintain the unit in a safe condition during hot shutdown, and (2) with a potential capability for subsequent cold shutdown of the reactor through the use of suitable procedures (GDC 19).

Evaluation Against Criterion 19

A control room is provided from which the nuclear power plant can be safely operated under normal conditions and can be maintained in a safe condition following postulated accidents.

The control room contains the following equipment: controls and necessary surveillance equipment for operation of the plant functions, such as the reactor and its auxiliary systems, ESF, turbine generator, steam and power conversion systems, and station electrical distribution boards.

The control room is located in a Safety Class 3, Seismic Category I structure. Safe occupancy of the control room during abnormal conditions is ensured by the design. Adequate shielding

is provided to maintain tolerable radiation levels in the control room in the event of a design basis accident for the duration of the accident.

The control room ventilation system has redundant and spatially separated fresh air intakes and redundant equipment, radiation detectors, and smoke detectors with appropriate alarms and interlocks. Redundant systems are provided for the control room air to be recirculated through high-efficiency particulate air (HEPA) and charcoal filters during isolation of the control room from outside air.

The control room can be continuously occupied under all operating and accident conditions. In the unlikely event that the control room must be vacated and access is restricted, instrumentation and controls are provided outside the control room from which safe shutdown of the reactor can be effected.

The above demonstrates that the control room design meets the requirements of Criterion 19.

For further discussion, see the following sections:

a.	General plant description	1.2
b.	Radwaste and control building	3.8
c.	Classification of structures, components, and systems	3.2
d.	Control room habitability	6.4
e.	Instrumentation and control	7
f.	Shutdown outside the control room	7.4
g.	Control room area ventilation system	9.4
h.	Fire protection	Appendix F
i.	Shielding	12.3
j.	Ventilation	12.3

3.1.2.3 Group III - Protection and Reactivity Control System

3.1.2.3.1 Criterion 20 - Protection System Functions

> The protection system shall be designed (1) to initiate automatically the operation of appropriate systems including the reactivity control systems, to assure that specified acceptable fuel design limits are not exceeded as a result of anticipated operational occurrences, and (2) to sense accident conditions and to initiate the operation of systems and components important to safety (GDC 20).

Evaluation Against Criterion 20

The RPS is designed to provide timely protection against the onset and consequences of conditions that threaten the integrity of the fuel barrier and the RCPB barrier. Fuel damage is prevented by the initiation of an automatic reactor shutdown if monitored system variables exceed limits of anticipated operational occurrences. Scram trip settings are selected and verified to be far enough above or below operating levels to provide proper protection but not be subject to spurious scrams. The RPS includes the high-inertia motor generator power system, sensors, relays, bypass circuitry, and switches that signal the control rod system to scram and shut down the reactor. The scrams initiated by neutron monitoring system variables, nuclear system high pressure, turbine stop valve closure, turbine control valve fast closure, MSIV closure, and reactor vessel low water level will prevent fuel damage following abnormal operational transients. Specifically, the process parameters initiate a scram in time to prevent the core from exceeding thermal hydraulic safety limits during abnormal operational transients. In addition, protection systems are provided to sense accident conditions and initiate automatically the operation of other systems and components important to safety.

The design of the protection system satisfies the functional requirements as specified in Criterion 20.

For further discussion, see the following sections:

a.	Principal design criteria	1.2
b.	Fuel system design	4.2
c.	Functional design of reactivity control systems	4.6
d.	Main steam line isolation system	5.4.5
e.	Reactor trip system	7.2
f.	Accident analyses	15

3.1.2.3.2 Criterion 21 - Protection System Reliability and Testability

> The protection system shall be designed for high functional reliability and inservice testability commensurate with the safety functions to be performed. Redundancy and independence designed into the protection system shall be sufficient to assure that (1) no single failure results in loss of the protection function, and (2) removal from service of any component or channel does not result in loss of the required minimum redundancy unless the acceptable reliability of operation of the protection system can be otherwise demonstrated. The protection system shall be designed to permit periodic testing of its functioning when the reactor is in operation, including a capability to test channels independently to determine failures and losses of redundancy that may have occurred (GDC 21).

Evaluation Against Criterion 21

The RPS design provides assurance that, through redundancy, each channel has sufficient reliability to fulfill the single-failure criterion. No single component failure, intentional bypass maintenance operation, calibration operation, or test to verify operational availability will impair the ability of the system to perform its intended safety function. Additionally, the system design ensures that when a scram trip point is exceeded there is a high scram probability. However, should a scram not occur, other monitored components will scram the reactor if their trip points are exceeded. There is sufficient electrical and physical separation between channels and between trip logics monitoring the same variable to prevent environmental factors, electrical transients, and physical events from impairing the ability of the system to respond correctly.

The RPS includes design features that permit inservice testing. This ensures the functional reliability of the system should the monitored reactor parameter exceed the corrective action setpoint.

The RPS initiates an automatic reactor shutdown if the monitored plant variables exceed preestablished limits. This system is arranged as two separately powered trip systems. Each trip system has two trip channels. An automatic or manual trip in either or both trip channels constitutes a trip system trip. A scram results when both trip systems have tripped. The logic scheme is a one-out-of-two twice arrangement. The RPS can be tested during reactor operation. Manual scram testing is performed by operating one of the four manual scram controls. Two manual scram controls are associated with each trip system, one in each trip channel. Operating one manual scram control tests one trip channel and one trip system. The total test verifies the ability to deenergize the scram pilot valve solenoids. Indicating lights verify that the actuator contacts have opened. This capability for a thorough testing program significantly increases reliability.

Control rod drive (CRD) operability can be tested during normal reactor operation. Drive position indicator and in-core neutron detectors are used to verify control rod movement. Each control rod can be inserted one notch and then withdrawn to the original position without significantly perturbing the nuclear system. One control rod is tested at a time. Control rod drive mechanism over-travel tests demonstrate rod-to-drive coupling integrity. Hydraulic supply subsystem pressures can be observed on control room instrumentation. More importantly, the hydraulic control unit scram accumulator and the scram discharge volume level are continuously monitored.

The MSIVs may be tested during full reactor operation. Individually, they can be closed to 90% of full open position without affecting the reactor operation. If reactor power is reduced sufficiently, the isolation valves on a single main steam supply line may be fully closed. Provisions are provided to evaluate valve stem leakage during reactor shutdown. During refueling operation, valve leakage rates can be determined.

The high functional reliability, redundancy, and inservice testability of the protection system satisfy the requirements specified in Criterion 21.

For further discussion, see the following sections:

a.	Principal design criteria	1.2
b.	Functional design of reactivity control systems	4.6
c.	Main steam line isolation system	5.4.5
d.	Reactor trip system	7.2

3.1.2.3.3 Criterion 22 - Protection System Independence

> The protection system shall be designed to assure that the effects of natural phenomena, and of normal operating, maintenance, testing, and postulated accident conditions on redundant channels do not result in loss of the protection function, or shall be demonstrated to be acceptable on some other defined basis. Design techniques, such as functional diversity or diversity in component design and principles of operation, shall be used to the extent practical to prevent loss of the protection function (GDC 22).

Evaluation Against Criterion 22

The components of protection systems are designed so that the mechanical and thermal environmental conditions resulting from any emergency situation in which the components are

required to function will not interfere with the operation of that function. The safety-related wiring and cabling necessary to support the operation of the RPS, outside of enclosures, are routed within totally enclosed and grounded raceway systems. The RPS has four independent initiation channels providing input to two trip systems for redundancy. Cabling for the four channels is routed in separate raceway systems to preserve channel independence. The wires from duplicate sensors on a common process tap are run in separate wireways. The system sensors are electrically and physically separated. Only one trip actuator logic circuit from each trip system may be run in the same wireway.

The RPS is designed to permit maintenance, calibration, and testing activities while the reactor is operating without restricting plant operation or affecting system safety function completion. This is accomplished by limiting these activities to only one of the independent initiation sensors or associated logic channels at a time leaving at least two channels per monitored parameter available to respond to an accident or transient. Only a single channel per trip system is required to initiate a scram. The protection system meets the design requirements for functional and physical independence as specified in Criterion 22.

For further discussion, see the following sections:

a.	Principal design criteria	1.2
b.	Functional design of reactivity control systems	4.6
c.	Main steam line isolation system	5.4
d.	Reactor trip system	7.2

3.1.2.3.4 Criterion 23 - Protection System Failure Modes

> The protection system shall be designed to fail into a safe state or into a state demonstrated to be acceptable on some other defined basis if conditions such as disconnection of the system, loss of energy (e.g., electric power, instrument air), or postulated adverse environments (e.g., extreme heat or cold, fire, pressure, steam, water, and radiation) are experienced (GDC 23).

Evaluation Against Criterion 23

The RPS components/logic are designed to fail into a safe state (system actuation) when conditions such as loss of electrical power source or fire occur. This is accomplished by maintaining the input/output logic components and final actuated devices in a normally energized state with deenergization resulting in the completion of their intended safety functions. Additionally, RPS cables that are located outside of panels are enclosed within totally enclosed and grounded raceways providing additional fail safe design.

Reactor protection system components that perform safety-related functions to mitigate a design basis event are designed to complete their intended safety functions even when exposed to adverse environmental conditions (e.g., temperature, pressure, steam, water, and radiation) postulated to occur during those events.

The failure modes of the protection system are such that it will fall into a safe state as required by Criterion 23.

For further discussion, see the following sections:

a.	Principal design criteria	1.2
b.	Environmental design of mechanical and electrical equipment	3.11
c.	Functional design of reactivity control systems	4.6
d.	Reactor trip system	7.2
e.	Electric power	8.3

3.1.2.3.5 Criterion 24 - Separation of Protection and Control Systems

> The protection system shall be separated from control systems to the extent that failure of any single control system component or channel, or failure or removal from service of any single protection system component or channel which is common to the control and protection systems leaves intact a system satisfying all reliability redundancy, and independence requirements of the protection system. Interconnection of the protection and control systems shall be limited so as to assure that safety is not significantly impaired (GDC 24).

Evaluation Against Criterion 24

There is separation between the RPS and the process control systems. Sensors, trip channels, and trip logics of the RPS are not used directly for automatic control of process systems. Therefore, failure in the controls and instrumentation of process systems cannot induce failure of any portion of the protection system. High scram reliability is designed into the RPS and hydraulic control unit for the CRD. The scram signal and mode of operation overrides all other signals.

The protection system is separated from control systems as required in Criterion 24.

For further discussion, see the following sections:

a.	Principal design criteria	1.2
b.	Functional design of reactivity control systems	4.6
c.	Reactor trip system	7.2
d.	Reactor manual control system instrumentation and controls	7.7

3.1.2.3.6 Criterion 25 - Protection System Requirements for Reactivity Control Malfunctions

The protection system shall be designed to assure that specified acceptable fuel design limits are not exceeded for any single malfunction of the reactivity control systems, such as accidental withdrawal (not ejection or dropout) of control rods (GDC 25).

Evaluation Against Criterion 25

The RPS provides protection against the onset and consequences of conditions that threaten the integrity of the fuel barrier and the RCPB. Any monitored variable exceeding the scram setpoint will initiate an automatic scram and not impair the remaining variables from being monitored. If one channel fails, the remaining portions of the RPS shall function.

The reactor manual control system is designed so that no single failure can negate the effectiveness of a reactor scram. The circuitry for the reactor manual control system is completely independent of the circuitry controlling the scram valves. This separation of the scram and normal rod control functions prevents failures in the reactor manual control circuitry from affecting the scram circuitry. Because each control rod is controlled as an individual unit, a failure that results in energizing any of the insert or withdraw solenoid valves can affect only one control rod. The effectiveness of a reactor scram is not impaired by the malfunctioning of any one control rod.

The most serious rod withdrawal errors are considered to be when the reactor is just subcritical and an out-of-sequence rod is continuously withdrawn. The rod worth minimizer would normally prevent the withdrawal of out-of-sequence rods. If such a continuous rod withdrawal were to occur, the increase in fuel temperature subsequent to scram would not be sufficient to exceed acceptable fuel design limits.

The design of the protection system ensures that specified acceptable fuel limits are not exceeded for any single malfunction of the reactivity control systems as specified in Criterion 25.

For further discussion, see the following sections:

a.	Principal design criteria	1.2
b.	Nuclear design	4.3
c.	Thermal and hydraulic design	4.4
d.	Functional design of reactivity control systems	4.6
e.	Reactor trip system	7.2
f.	Reactor manual control system instrumentation and controls	7.7
g.	Accident analyses	15

3.1.2.3.7 Criterion 26 - Reactivity Control System Redundancy and Capability

> Two independent reactivity control systems of different design principles shall be provided. One of the systems shall use control rods, preferably including a positive means for inserting the rods, and shall be capable of reliably controlling reactivity changes to assure that under conditions of normal operation, including anticipated operational occurrences, and with appropriate margin for malfunctions such as stuck rods, specified acceptable fuel design limits are not exceeded. The second reactivity control system shall be capable of reliably controlling the rate of reactivity changes resulting from planned, normal power changes (including xenon burnout) to assure acceptable fuel design limits are not exceeded. One of the systems shall be capable of holding the reactor core subcritical under cold conditions (GDC 26).

Evaluation Against Criterion 26

Two independent reactivity control systems using different design principles are provided. The normal method of reactivity control employs control rod assemblies. Positive insertion of these control rods is provided by means of the CRD hydraulic system. The control rods are capable of reliably controlling reactivity changes during normal operation (e.g., power changes, power shaping, xenon burnout, normal startup and shutdown) via operator-controlled insertions and withdrawals. The control rods are also capable of maintaining the core within acceptable fuel design limits during anticipated operational occurrences via the automatic

scram function. The unlikely occurrence of a limited number of stuck rods during a scram will not adversely affect the capability to maintain the core within fuel design limits.

The circuitry for manual insertion or withdrawal of control rods is completely independent of the circuitry for reactor scram. This separation of the scram and normal rod control functions prevents failures in the reactor manual control circuitry from affecting the scram circuitry. Two sources of scram energy (accumulator pressure and reactor vessel pressure) provide needed scram performance over the entire range of reactor pressure, i.e., from operating conditions to cold shutdown. The design of the control rod system includes appropriate margin for malfunctions such as stuck rods. Control rod withdrawal sequences and patterns are selected prior to operation to achieve optimum core performance, and simultaneously, low individual rod worths. The operating procedures to accomplish such patterns are supplemented by the rod worth minimizer, which prevents rod withdrawals yielding a rod worth greater than permitted by the preselected rod withdrawal pattern. Because of the carefully planned and regulated rod withdrawal sequence, prompt shutdown of the reactor can be achieved with the insertion of a small number of the many independent control rods. In the event that a reactor scram is necessary, the unlikely occurrence of a limited number of stuck rods will not hinder the capability of the control rod system to render the core subcritical.

The second independent reactivity control system is provided by the reactor coolant recirculation system. By varying reactor flow, it is possible to affect the type of reactivity changes necessary for planned, normal power changes (including xenon burnout). In the event that reactor flow is suddenly increased to its maximum value (pump runout), the core will not exceed fuel design limits because the power flow map defines the allowable initial operating states such that the pump runout will not violate these limits.

The control rod system is capable of holding the reactor core subcritical under cold conditions, even when the control rod of highest worth is assumed to be stuck in the fully withdrawn position. This shutdown capability of the control rod system is made possible by designing the fuel with burnable poison (Gd_2O_3) to control the high reactivity of fresh fuel. In addition, the standby liquid control system is available to add soluble boron to the core and render it subcritical, as discussed in Section 3.1.2.3.8.

The redundancy and capabilities of the reactivity control systems for the BWR satisfy the requirements of Criterion 26.

For further discussion, see the following sections:

a.	Principal design criteria	1.2
b.	Reactivity control system	4.3
c.	Functional design reactivity control system	4.6

d.	Reactor trip system	7.2
e.	Process computer system instrumentation and controls (rod worth minimizer)	7.7
f.	Reactor manual control system instrumentation and controls	7.7
g.	Reactor recirculation system	5.4

3.1.2.3.8 Criterion 27 - Combined Reactivity Control Systems Capability

The reactivity control systems shall be designed to have a combined capability, in conjunction with poison addition by the emergency core cooling system, of reliably controlling reactivity changes to assure that under postulated accident conditions and with appropriate margin for stuck rods, the capability to cool the core is maintained (GDC 27).

Evaluation Against Criterion 27

There is no credible event applicable to the BWR which requires combined capability of the control rod system and poison additions by the emergency core cooling network. The BWR design is capable of maintaining the reactor core subcritical, including allowance for a stuck rod, without addition of any poison to the reactor coolant. The primary reactivity control system for the BWR during postulated accident conditions is the control rod system. Abnormalities are sensed and, if protection system limits are reached, corrective action is initiated through automatic insertion of control rods. High integrity of the protection system is achieved through the combination of logic arrangement, actuator redundancy, power supply redundancy, and physical separation. High reliability of reactor scram is further achieved by separation of scram and manual control circuitry, individual control units for each control rod, and fail-safe design features built into the rod drive system. Response by the RPS is prompt and the total scram time is short.

In the event that more than one control rod fails to insert, and the core cannot be maintained in a subcritical condition by control rods alone as the reactor is cooled down subsequent to initial shutdown, the standby liquid control (SLC) system will be actuated to insert soluble boron into the reactor core. The SLC system has sufficient capacity to ensure that the reactor can always be maintained subcritical; and hence, only decay heat will be generated by the core which can be removed by the RHR system, thereby ensuring that the core will always be coolable.

The design of the reactivity control system ensures reliable control of reactivity under postulated accident conditions with appropriate margin for stuck rods. The capability to cool is maintained under all postulated accident conditions; thus, Criterion 27 is satisfied.

For further discussion, see the following sections:

a.	Principal design criteria	1.2
b.	Reactivity control system	4.3
c.	Nuclear design	4.3
d.	Thermal and hydraulic design	4.4
e.	Functional design of reactivity control system	4.6
f.	Reactor trip system	7.2
g.	Reactor manual control system	7.7
h.	Process computer system instrumentation and controls (rod worth minimizer)	7.7
i.	Standby liquid control system	9.3.5
j.	Accident analyses	15

3.1.2.3.9 Criterion 28 - Reactivity Limits

The reactivity control systems shall be designed with appropriate limits on the potential amount and rate of reactivity increase to assure that the effects of postulated reactivity accidents can neither (1) result in damage to the reactor coolant pressure boundary greater than limited local yielding nor (2) sufficiently disturb the core, its support structures, or other reactor pressure vessel internals to impair significantly the capability to cool the core. These postulated reactivity accidents shall include consideration of rod ejection (unless prevented by positive means), rod dropout, steam line rupture, changes in reactor coolant temperature and pressure, and cold water addition (GDC 28).

Evaluation Against Criterion 28

The control rod system design incorporates appropriate limits on the amount and rate of reactivity increase. Control rod withdrawal sequences and patterns are selected to achieve

optimum core performance and low individual rod worths. The rod worth minimizer prevents withdrawal other than by the preselected rod withdrawal pattern. The rod worth minimizer function assists the operator with an effective backup control rod monitoring routine that enforces adherence to established startup, shutdown, and low power level operations control rod procedures.

The control rod mechanical design incorporates a hydraulic velocity limiter in the control rod which prevents rapid rod ejection. This protects against a high reactivity insertion rate by limiting the control rod velocity to less than 5 ft/sec. Normal rod movement is limited to 6 in. increments and the rod withdrawal rate is limited through the hydraulic valve to 3 in./sec.

The accident analyses (Chapter 15) evaluates postulated reactivity accidents as well as abnormal operational transients in detail. Analyses are included for rod dropout, steam line rupture, changes in reactor coolant temperature and pressure, and cold water addition. The initial conditions, assumptions, calculational models, sequences of events, and anticipated results of each postulated occurrence are covered in detail. The results of these analyses indicate that none of the postulated reactivity transients or accidents would result in damage to the RCPB. In addition, the integrity of the core, its support structures or other reactor pressure vessel (RPV) internals, are maintained so that the capability to cool the core is not impaired for any of the postulated reactivity accidents described in the accident analyses.

The design features of the reactivity control system, which limit the potential amount and rate of reactivity increase, ensure that Criterion 28 is satisfied for all postulated reactivity accidents.

For further discussion, see the following sections:

a.	Principal design criteria	1.2
b.	CRD systems	3.9
c.	Reactor core support structures and internals mechanical design	4.2
d.	Reactivity control system	4.3
e.	Nuclear design	4.3
f.	CRD housing supports	4.5.3
g.	Overpressurization protection	5.2.2
h.	Reactor vessel and appurtenances	5.3

i.	Main steam line flow restrictor	5.4.4
j.	MSIV system	5.4.5
k.	Process computer system	7.7.1.9
l.	Accident analyses	15

3.1.2.3.10 Criterion 29 - Protection Against Anticipated Operational Occurrences

The protection and reactivity control system shall be designed to assure an extremely high probability of accomplishing their safety functions in the event of anticipated operational occurrences (GDC 29).

Evaluation Against Criterion 29

The high functional reliability of the protection and reactivity control system is achieved through the combination of logic arrangements, redundancy, physical and electrical independence, functional separation, fail-safe design, and inservice testability. These design features are discussed in detail in Criteria 21, 22, 23, 24, and 26.

An extremely high reliability of timely response to anticipated operational occurrences is maintained by a thorough program of inservice testing and surveillance. Components important to safety such as CRDs and MSIVs are tested during normal operation. The capability for inservice testing ensures the high functional reliability of protection and reactivity control systems should a reactor variable exceed the corrective action setpoint.

The capabilities of the protection and reactivity control systems to perform their safety functions in the event of anticipated operational occurrences are satisfied in agreement with the requirements of Criterion 29.

For further discussion, see the following sections:

a.	Principal design criteria	1.2
b.	Reactivity control system	4.6
c.	MSIV system	5.4.5
d.	Reactor trip system	7.2

3.1.2.4 Group IV - Fluid Systems

3.1.2.4.1 Criterion 30 - Quality of Reactor Coolant Pressure Boundary

> Components which are part of the reactor coolant pressure boundary shall be designed, fabricated, erected, and tested to the highest quality standards practical. Means shall be provided for detecting and, to the extent practical, identifying the location of the source of reactor coolant leakage (GDC 30).

Evaluation Against Criterion 30

By utilizing conservative design practices and detailed quality control procedures, the pressure retaining components of the RCPB are designed and fabricated to retain their integrity during normal and postulated accident conditions. Accordingly, components that compose the RCPB are designed, fabricated, erected, and tested in accordance with recognized industry codes and standards listed in Table 3.2-1 and Chapter 5. Further, product and process quality planning is provided to ensure conformance with the applicable codes and standards and to retain appropriate documented evidence verifying compliance. Because the subject matter of this criterion deals with aspects of the RCPB, further discussion on this subject is treated in the response to Criterion 14, Reactor Coolant Pressure Boundary.

Means are provided for detecting reactor coolant leakage. The leak detection system consists of sensors and instruments to detect, annunciate, and in some cases, isolate the RCPB from potential hazardous leaks before predetermined limits are exceeded. Small leaks are detected by temperature and pressure changes, increased frequency of sump pump operation, and by measuring fission product concentration. In addition to these means of detection, large leaks are detected by changes in flow rates in process lines and changes in reactor water level. The allowable leakage rates have been based on the predicted and experimentally determined behavior of cracks in pipes, the ability to make up coolant system leakage, the normally expected background leakage due to equipment design, and the detection capability of the various sensors and instruments. The total leakage rate limit is established so that in the absence of normal ac power with loss of feedwater supply, makeup capabilities are provided by the RCIC system. While the leak detection system provides protection from small leaks, the ECCS network provides protection for the complete range of discharges from ruptured pipes. Thus, protection is provided for the full spectrum of possible discharges.

The RCPB and leak detection system are designed to meet the requirements of Criterion 30.

For further discussion, see the following sections:

a. Principal design criteria 1.2

b.	Design of structures, components, equipment, and systems	3
c.	Overpressurization protection	5.2.2
d.	Integrity of RCPB	5.2
e.	Detection of leakage through the RCPB	5.2.5
f.	Reactor vessel	5.3
g.	Component and subsystem design	5.4
h.	Reactor recirculation system	5.4
i.	Instrumentation and control systems	7
j.	Primary containment and reactor vessel isolation control system	7.3
k.	Leak detection system - instrumentation and control	7.6
l.	Quality assurance	17
m.	Inservice inspection and testing of the RCPB	5.2.4

3.1.2.4.2 Criterion 31 - Fracture Prevention of Reactor Coolant Pressure Boundary

The reactor coolant pressure boundary shall be designed with sufficient margin to assure that when stressed under operating, maintenance, testing, and postulated accident conditions (1) the boundary behaves in a nonbrittle manner; and (2) the probability of rapidly propagating fracture is minimized. The design shall reflect consideration of service temperatures and other conditions of the boundary material under operating, maintenance, testing, and postulated accident conditions and the uncertainties in determining (1) material properties, (2) the effects of irradiation on material properties, (3) residual, steady-state and transient stresses, and (4) size of flaws (GDC 31).

Evaluation Against Criterion 31

Brittle fracture control of pressure-retaining ferritic materials is provided to ensure protection against nonductile fracture. To minimize the possibility of brittle fracture failure of the RPV, the RPV was designed to meet the requirements of ASME Code Section III.

The nil-ductility transition (NDT) temperature is defined as the temperature below which ferritic steel breaks in a brittle rather than ductile manner. The NDT temperature increases as a function of neutron exposure at integrated neutron exposures greater than about 1 x 10^{17} nvt with neutron of energies in excess of 1 MeV.

The reactor assembly design provides an annular space from the outermost fuel assemblies to the inner surface of the reactor vessel that serves to attenuate the fast neutron flux incident up on the reactor vessel wall. This annular volume contains the core shroud, jet pump assemblies, and reactor coolant. Assuming plant operation at rated power and availability of 100% for the plant life time, the neutron fluence at the inner surface of the vessel causes a slight shift in the transition temperature. Expected shifts in transition temperature during design life as a result of environmental conditions, such as neutron flux, are considered in the design. Operational limitations assume that NDT temperature shifts are accounted for in the reactor operation. The Technical Specifications describe the mechanism for incorporating temperature shifts caused by the neutron flux.

The RCPB is designed, maintained, and tested such that adequate assurance is provided that the boundary will behave in a nonbrittle manner throughout the life of the plant. Therefore, the RCPB is in conformance with Criterion 31.

For further discussion, see the following sections:

a. Design of structures, components, equipment, and systems 3

b. Integrity of RCPB 5.2

c. Reactor vessel 5.3

3.1.2.4.3 Criterion 32 - Inspection of Reactor Coolant Pressure Boundary

Components which are part of the reactor coolant pressure boundary shall be designed to permit (1) periodic inspection and testing of important areas and features to assess their structural and leaktight integrity, and (2) appropriate material surveillance program for the reactor vessel (GDC 32).

Evaluation Against Criterion 32

The RPV design includes provisions for inservice inspection. Removable plugs in the sacrificial shield and/or removable panels in the insulation provide access for examination of the vessel and its appurtenances. Also, removable insulation is provided on the reactor coolant system safety/relief valves, recirculation system, and on the main steam feedwater systems extending out to and including the first isolation valve outside containment. Inspection of the

RCPB is in accordance with the ASME Code Section XI. Section 5.2.4 defines the Inservice Inspection Program Plan, access provisions, and areas of restricted access.

Vessel material surveillance capsules are located at the 30° and 120°azimuth locations in the vessel adjacent to the wall. Specimens of the base metal, weld metal, and heat-affected zone metal are located in each capsule.

The plant testing and inspection program ensures that the requirements of Criterion 32 will be met.

For further discussion, see the following sections:

a.	Design of structures, components, equipment, and systems	3
b.	Inservice inspection and testing of RCPB	5.2.4
c.	Reactor vessel	5.3
d.	Component and subsystem design	5.4

3.1.2.4.4 Criterion 33 - Reactor Coolant Makeup

> A system to supply reactor coolant makeup for protection against small breaks in the reactor coolant pressure boundary shall be provided. The system safety function shall be to assure that specified acceptable fuel design limits are not exceeded as a result of reactor coolant loss due to leakage from the reactor coolant pressure boundary and rupture of small piping or other small components which are part of the boundary. The system shall be designed to assure that for onsite electric power system operation (assuming offsite power is not available) and for offsite electric power system operation (assuming onsite power is not available) the system safety function can be accomplished using the piping, pumps, and valves used to maintain coolant inventory during normal reactor operation (GDC 33).

Evaluation Against Criterion 33

Means are provided for detecting reactor coolant leakage. The leak detection system consists of sensors and instruments to detect, annunciate, and in some cases isolate the RCPB from potential hazardous leaks before predetermined limits are exceeded. Small leaks are detected by temperature and pressure changes, increased frequency of sump pump operation, and by measuring fission product concentration. In addition to these means of detection, large leaks are detected by changes in flow rates in process lines and changes in reactor water level. The allowable leakage rates have been based on predicted and experimentally determined behavior

of cracks in pipes, the ability to make up coolant system leakage, the normally expected background leakage due to equipment design, and the detection capability of the various sensors and instruments. The total leakage rate limit is established so that in the absence of normal ac power concomitant with a loss of feedwater supply, makeup capabilities are provided by the RCIC system.

The plant is designed to provide ample reactor coolant makeup for protection against small leaks in the RCPB for anticipated operational occurrences and postulated accident conditions. The design of these systems meets the requirements of Criterion 33.

For further discussion, see the following sections:

a.	Detection of leakage through RCPB	5.2.5
b.	RCIC system	5.4.6
c.	ECCS	6.3
d.	Instrumentation and controls	7
e.	Electric power	8

3.1.2.4.5 Criterion 34 - Residual Heat Removal

A system to remove residual heat shall be provided. The system safety function shall be to transfer fission product decay heat and other residual heat from the reactor core at a rate such that specified acceptable fuel design limits and the design conditions of the reactor coolant pressure boundary are not exceeded.

Suitable redundancy in components and features, and suitable interconnections, leak detection, and isolation capabilities shall be provided to assure that for onsite electric power system operation (assuming offsite power is not available) and for offsite electric power system operation (assuming onsite power is not available) the system safety function can be accomplished, assuming a single failure (GDC 34).

Evaluation Against Criterion 34

The RHR system provides the means to remove decay heat and residual heat from the nuclear system so that refueling and nuclear system servicing can be performed.

The major equipment of the RHR system consists of heat exchangers cooled by the service water system and main system pumps. The equipment is connected by associated valves and piping, and the controls and instrumentation are provided for proper system operation.

The RHR system consists of two modes of operation that provide the shutdown cooling function. One mode, the normal Shutdown Cooling Mode, is the preferred operational mode. Although preferred, this mode of RHR does not meet the redundancy/single failure requirements of IEEE 279 and 10 CFR 50 Appendix A, GDC 34. As a result, a second shutdown cooling mode, the Alternate Shutdown Cooling Mode, is available and is the shutdown cooling mode credited to meet the requirements of IEEE 279 and GDC 34. This mode is safety related, Quality Class 1, Seismic Category 1, redundant and single failure proof. Since the normal Shutdown Cooling Mode of RHR is preferred for CGS, the components required for the operation of this mode are maintained as safety related, Quality Class 1. Refer to Section 5.4.7 for a complete discussion of the shutdown cooling modes of RHR.

Both normal ac power and the auxiliary onsite power system provide adequate power to operate all the auxiliary loads necessary for plant operation. The power sources for the plant auxiliary power system are sufficient in number and of such electrical and physical independence that no single probable event could interrupt all auxiliary power at one time.

The plant auxiliary buses which supply power to ESF, RPS, and auxiliaries required for safe shutdown are connected by appropriate switching to the standby diesel generators.

Each power source, up to the connection to the auxiliary power buses, is capable of complete and rapid isolation from any other source.

Loads important to plant operation and safety are split and diversified between switchgear sections, and means are provided for detection and isolation of system faults.

The plant layout is designed to physically separate essential bus sections, standby diesel generators, switchgear, interconnections, feeders, power centers, motor control centers, and other system components.

Standby diesel generators are provided to supply electrical power from within the plant that is not dependent on external sources. The standby generators produce ac power at a voltage and frequency compatible with the normal bus requirements for essential equipment within the plant. Each of the diesel generators has sufficient capacity to start and carry the essential loads it is expected to drive.

The RHR system is adequate to remove residual heat from the reactor core to ensure that fuel and RCPB design limits are not exceeded. Redundant reactor coolant circulation paths are available to and from the vessel and RHR system. Redundant onsite electric power systems

are provided. The design of the RHR system, including its power supply, meets the requirements of Criterion 34.

For further discussion see the following sections:

a.	RHR system	5.4
b.	ECCS	6.3
c.	ESF systems	7.3
d.	Auxiliary power system	8.3
e.	Water systems	9.2
f.	Accident analyses	15

3.1.2.4.6 Criterion 35 - Emergency Core Cooling

A system to provide abundant emergency core cooling shall be provided. The system safety function shall be to transfer heat from the reactor core following any loss of reactor coolant at a rate such that (1) fuel and clad damage that could interfere with continued effective core cooling is prevented, and (2) clad metal-water reaction is limited to negligible amounts.

Suitable redundancy in components and features, and suitable interconnections, leak detection, isolation, and containment capabilities shall be provided to assure that for onsite electric power system operation (assuming offsite power is not available) and for offsite electric power system operation (assuming onsite power is not available) the system safety function can be accomplished, assuming a single failure (GDC 35).

Evaluation Against Criterion 35

The ECCS, consists of the following:

a. High-pressure core spray system (HPCS),

b. Automatic depressurization system (ADS),

c. Low-pressure core spray (LPCS) system, and

d. Low-pressure coolant injection (LPCI) (an operating mode of the RHR system).

The ECCS are designed to limit fuel cladding temperature over the complete spectrum of possible break sizes in the RCPB including a complete and sudden circumferential rupture of the largest pipe connected to the reactor vessel.

The HPCS system consists of a single motor-driven pump, system piping, valves, controls, and instrumentation. The HPCS system is provided to ensure that the reactor core is adequately cooled to prevent excessive fuel clad temperatures for breaks in the nuclear system that do not result in rapid depressurization of the reactor vessel. The HPCS continues to operate when reactor vessel pressure is below the pressure at which LPCI operation or LPCS operation maintains core cooling. A source of water is available from either the condensate storage tank or the suppression pool.

The automatic depressurization system functions to reduce the reactor pressure so that flow from LPCI and the LPCS enters the reactor vessel in time to cool the core and prevent excessive fuel clad temperature. The ADS uses several of the main steam safety/relief valves (MSRVs) to relieve the high pressure steam to the suppression pool.

The LPCS system consists of (a) a centrifugal pump that can be powered by normal auxiliary power or the standby ac power system, (b) a spray sparger in the reactor vessel, above the core (separate from the HPCS sparger), (c) piping and valves to convey water from the suppression pool to the sparger, and (d) associated controls and instrumentation. In case of low water level in the reactor vessel or high pressure in the drywell, the LPCS automatically sprays water onto the top of the fuel assemblies in time and at a sufficient flow rate to cool the core and prevent excessive fuel temperature. The LPCI system starts from the same signals which initiate the LPCS system and operate independently to achieve the same objective by flooding the reactor vessel.

In case of low water level in the reactor or high pressure in the drywell, the LPCI mode of operation of the RHR system pumps water into the reactor vessel in time to flood the core and prevent excessive fuel temperature. Protection provided by LPCI extends to a small break where the ADS has operated to lower the reactor vessel pressure.

Results of the performance of the ECCS for the entire spectrum of liquid line breaks are discussed in Section 6.3. Peak cladding temperatures are well below the 2200°F design basis.

Also provided in Section 6.3.3 is an analysis to show that the ECCS conform to 10 CFR Part 50, Appendix K. This analysis shows complete compliance with the Final Acceptance Criteria with the following results:

a. Peak clad temperatures are well below the 2200°F NRC acceptability limit,

b. The amount of fuel cladding reacting with steam is nearly an order of magnitude below the 1% acceptability limit,

c. The clad temperature transient is terminated while core geometry is still amenable to cooling, and

d. The core temperature is reduced and the decay heat can be removed for an extended period of time.

The redundancy and capability of the onsite electrical power systems for the ECCS are represented in the evaluation against Criterion 34.

The ECCS provided are adequate to prevent fuel and clad damage that could interfere with effective core cooling and limit clad metal-water reaction to a negligible amount. The design of the ECCS, including their power supply, meets the requirements of Criterion 35.

For further discussion, see the following sections:

a.	RHR system	5.4.7
b.	ECCS	6.3
c.	Onsite power systems	8.3
d.	Water systems	9.2
e.	Accident analyses	15

3.1.2.4.7 Criterion 36 - Inspection of Emergency Core Cooling System

The emergency core cooling system shall be designed to permit appropriate periodic inspection of important components, such as spray rings in the reactor pressure vessel, water injection nozzles, and piping, to assure the integrity and capability of the system (GDC 36).

Evaluation Against Criterion 36

The ECCS discussed in Criterion 36 include inservice inspection considerations. The spray spargers within the vessel are accessible for inspection during each refueling outage. Removable plugs in the reactor shield and/or panels in the insulation provide access for examination of nozzles. Removable insulation is provided on the ECCS piping out to and including the first isolation valve outside the drywell. Inspection of the ECCS is in accordance

with the intent of Section XI of the ASME Code. Sections 5.2.4 and 6.6 define the Inservice Inspection Program Plan, access provisions, and areas of restricted access.

During plant operations, the pumps, valves, piping, instrumentation, wiring, and other components outside the primary containment can be visually inspected at any time. Components inside the primary containment can be inspected when the primary containment is open for access. When the reactor vessel is open, for refueling or other purposes, the spargers and other internals can be inspected. Portions of the ECCS which are part of the RCPB are designed to specifications for inservice inspection to detect defects which might affect the cooling performance. Particular attention will be given to the reactor nozzles, core spray, and feedwater spargers. The design of the reactor vessel and internals and the plant testing and inspection program ensure that the requirements of Criterion 36 are met.

For further discussion, see the following sections:

a.	Reactor pressure vessel internals	3.9.5
b.	Inservice inspection and testing of RCPB	5.2.4
c.	Reactor vessel	5.3
d.	ECCS	6.3
e.	Inservice inspection of Class 2 and 3 components	6.6

3.1.2.4.8 Criterion 37 - Testing of Emergency Core Cooling System

> The emergency core cooling system shall be designed to permit appropriate periodic pressure and functional testing to assure (1) the structural and leaktight integrity of its components, (2) the operability and performance of the active components of the system, and (3) the operability of the system as a whole and, under conditions as close to design as practical, the performance of the full operational sequence that brings the system into operation, including operation of applicable portions of the protection system, the transfer between normal and emergency power sources, and the operation of the associated cooling water system (GDC 37).

Evaluation Against Criterion 37

The ECCS consists of the HPCS system, ADS, the LPCI mode of the RHR system, and LPCS system. Each of these systems is provided with test connections and isolation valves to permit periodic pressure testing to ensure the structural and leaktight integrity of its components.

The HPCS, LPCS, LPCI systems, and the ADS are designed to permit periodic testing to ensure the operability and performance of the active components of each system.

The pumps and valves of these systems are tested and flow rate tests conducted periodically to verify operability in accordance with the CGS Inservice Testing Program Plan and Technical Specifications. Flow rate tests are conducted on HPCS, LPCS, and LPCI systems.

The ECCS are tested under conditions as close to design as practical to verify the performance of the full operational sequence that brings each system into operation, in accordance with the Technical Specifications surveillance requirements. The operation of the associated cooling water systems is discussed in the evaluation of Criterion 46. The design of the ECCS meets the requirements of Criterion 37.

For further discussion, see the following sections:

a.	Overpressurization protection	5.2.2
b.	Tests and inspections	6.3.4
c.	ESF systems	7.3
d.	Electric power	8

3.1.2.4.9 Criterion 38 - Containment Heat Removal

> A system to remove heat from the reactor containment shall be provided. The system safety function shall be to reduce rapidly, consistent with the functioning of other associated systems, the containment pressure and temperature following any loss-of-coolant accident and maintain them at acceptably low levels.
>
> Suitable redundancy in components and features, and suitable interconnections, leak detection, isolation, and containment capabilities shall be provided to assure that for onsite electrical power system operation (assuming offsite power is not available) and for offsite electrical power system operation (assuming onsite power is not available) the system safety function can be accomplished, assuming a single failure (GDC 38).

Evaluation Against Criterion 38

In the event of a LOCA within the drywell, the pressure suppression system will rapidly condense the steam to prevent overpressure. An increase in pressure in the drywell from a leak in the RCPB is relieved below the surface of the suppression pool and the steam portion of the gases so vented are condensed by contact with the suppression pool water. Cooling

systems remove heat from the core and from the water in the suppression pool during accident conditions and thus provide continuous cooling of the drywell.

The ECCS provides core cooling in the event of a LOCA. Low water level in the reactor vessel or high pressure in the drywell will initiate the ECCS to prevent excessive fuel temperature. Sufficient water is provided in the suppression pool to accommodate the initial energy which can be released from the postulated pipe failure.

The containment heat removal function is accomplished by the RHR system. Following a LOCA, one or both of the following operating modes of the RHR system would be initiated:

a. Containment spray - condenses steam within the containment, and

b. Suppression pool cooling - limits the temperature within the containment by removing heat from the suppression pool water by way of the RHR heat exchangers. Either or both redundant RHR heat exchangers can be manually activated.

The redundancy and capability of the offsite and onsite electrical power systems for the RHR system are presented in the evaluation against Criterion 34.

For further discussion, see the following sections:

a.	RHR system	5.4.7
b.	Containment systems	6.2
c.	ECCS	6.3
d.	ESF systems	7.3
e.	Electric power	8
f.	Standby service water system	9.2.7
g.	Accident analyses	15

3.1.2.4.10 Criterion 39 - Inspection of Containment Heat Removal System

The containment heat removal system shall be designed to permit appropriate periodic inspection of important components, such as the torus, sumps, spray nozzles, and piping to assure the integrity and capability of the system (GDC 39).

Evaluation Against Criterion 39

Provisions are made to facilitate periodic inspections of active components and other important equipment of the drywell pressure reducing systems. During plant operations, the pumps, valves, piping, instrumentation, wiring, and other components outside the drywell can be visually inspected at any time and will be inspected periodically. The testing frequencies of most components will be correlated with the component inspection.

The suppression pool is designed to permit periodic inspection. The containment heat removal system is designed to permit periodic inspection of major components. This design meets the requirements of Criterion 39.

For further discussion, see the following sections:

a.	RHR system	5.4.7
b.	Containment systems	6.2
c.	ECCS	6.3
d.	ESF systems	7.3
e.	Standby service water system	9.2.7

3.1.2.4.11 Criterion 40 - Testing of Containment Heat Removal System

> The containment heat removal system shall be designed to permit appropriate periodic pressure and functional testing to assure (1) the structural and leaktight integrity of its components, (2) the operability and performance of the active components of the systems, and (3) the operability of the system as a whole, and under conditions as close to the design as practical, the performance of the full operational sequence that brings the system into operation, including operation of applicable portions of the protection system, the transfer between normal and emergency power sources, and the operation of the associated cooling water system (GDC 40).

Evaluation Against Criterion 40

The containment heat removal function is accomplished by the suppression pool cooling mode of the RHR system.

The RHR system is provided with sufficient test connections and isolation valves to permit periodic pressure testing. The pumps and valves of the RHR system are operated periodically to verify operability in accordance with the Inservice Testing Program Plan. The suppression pool cooling mode is not automatically initiated, and the operation of the components of this system is periodically verified. The operation of associated cooling water systems is discussed in the response to Criterion 46. It is concluded that the requirements of Criterion 40 are met.

For further discussion see the following sections:

a.	RHR system	5.4.7
b.	ECCS	6.3
c.	Electric power	8

3.1.2.4.12 Criterion 41 - Containment Atmosphere Cleanup

> Systems to control fission products, hydrogen, oxygen, and other substances which may be released into the reactor containment shall be provided as necessary to reduce, consistent with the functioning of other associated systems, the concentration and quantity of fission products released to the environment following postulated accidents, and to control the concentration of hydrogen or oxygen and other substances in the containment atmosphere following postulated accidents to assure that containment integrity is maintained.
>
> Each system shall have suitable redundancy in components and features, and suitable interconnections, leak detection, isolation, and containment capabilities to assure that for onsite electric power system operation (assuming offsite power is not available) and for offsite electric power system operation (assuming onsite power is not available) its safety can be accomplished, assuming a single failure (GDC 41).

Evaluation Against Criterion 41

A primary containment that provides a barrier to control the release of fission products, hydrogen, oxygen, and other substances to the atmosphere is totally enclosed within the reactor building. Following an accident the reactor building is maintained at a negative pressure with respect to atmosphere to ensure that any leakage from the primary containment does not leak to atmosphere but is retained in the reactor building. The air exhausted from the reactor building to maintain it at a negative pressure is processed through the SGTS, which contains both HEPA and charcoal filters to minimize the release of radioactivity to the environs. The primary containment atmosphere can also be purged through the standby gas treatment for

cleanup prior to entry of personnel. The SGTS is composed of two fully redundant trains of filters and fans, with all active components powered from the emergency diesel buses.

The above described systems meet the requirements of Criterion 41.

For further discussion see the following sections:

a.	Principal design criteria	1.2
b.	Containment functional design	6.2.1
c.	Secondary containment functional design	6.2.3
d.	Combustible gas control in containment	6.2.5
e.	Fission product removal and control systems	6.5
f.	Instrumentation and controls	7

3.1.2.4.13 Criterion 42 - Inspection of Containment Atmosphere Cleanup Systems

The containment atmosphere cleanup systems shall be designed to permit appropriate periodic inspection of important components, such as filter frames, ducts, and piping to assure the integrity and capability of the systems (GDC 42).

Evaluation Against Criterion 42

All components of the SGTS are located in the reactor building and are accessible for inspection during normal plant operation. The design of the system therefore meets the requirements of Criterion 42 (see Section 6.5).

3.1.2.4.14 Criterion 43 - Testing of Containment Atmosphere Cleanup Systems

The containment atmosphere cleanup systems shall be designed to permit appropriate periodic pressure and functional testing to assure (1) the structural and leaktight integrity of its components, (2) the operability and performance of the active components of the systems such as fans, filters, dampers, pumps, and valves, and (3) the operability of the systems as a whole and, under conditions as close to design as practical, the performance of the full operational sequence that brings the system into operation, including operation of applicable portions of the protection system, the transfer between normal and emergency power sources, and the operation of associated systems (GDC 43).

Evaluation Against Criterion 43

As discussed under the evaluation of Criterion 42, all components of the containment atmosphere cleanup system are accessible for tests and inspections during normal plant operation thereby meeting the requirements of Criterion 43. A detailed discussion of the periodic tests that will be performed to verify system operability is given in Section 6.5.

3.1.2.4.15 Criterion 44 - Cooling Water

> A system to transfer heat from structures, systems, and components important to safety, to an ultimate heat sink shall be provided. The system safety function shall be to transfer the combined heat load of these structures, systems, and components under normal operating and accident conditions.
>
> Suitable redundancy in components and features, and suitable interconnections, leak detection, and isolation capabilities shall be provided to assure that for onsite electrical power system operation (assuming offsite electrical power is not available) and for offsite electric power system operation (assuming onsite power is not available) the system safety function can be accomplished, assuming a single failure (GDC 44).

Evaluation Against Criterion 44

The safety-related cooling water system is the standby service water (SW) system, which supplies cooling for the RHR, HPCS, LPCS, fuel pool cooling and cleanup (FPC) system, and the essential HVAC systems.

The redundant SW systems are open loop systems which transfer heat from structures, systems, and safety-related components to the ultimate heat sink.

The ultimate heat sink consists of two man-made Seismic Category I spray ponds and is designed to withstand extreme natural phenomena.

The piping, valves, pumps, and heat exchangers of the SW system are designed and arranged so that the system safety function can be performed assuming a single failure. Electrical power is supplied to the system from offsite or onsite emergency power sources, with distribution arranged such that a single failure will not prevent the system from performing its safety function.

For further discussion, see the following sections:

a. Principal design criteria 1.2

b.	Classification of structures, components, and systems	3.2
c.	Wind and tornado loadings	3.3
d.	Water level (flood) design	3.4
e.	Missile protection	3.5
f.	Design of Seismic Category I structures	3.8
g.	Ultimate heat sink	9.2.5
h.	Standby service water system	9.2.7
i.	Electrical power	8

3.1.2.4.16 Criterion 45 - Inspection of Cooling Water System

The cooling water system shall be designed to permit appropriate periodic inspection of important components, such as heat exchangers and piping, to assure the integrity and capability of the system (GDC 45).

Evaluation Against Criterion 45

The SW system is designed to permit periodic inspection of important components, including pumps, strainers, heat exchangers, and isolation valves, to ensure the integrity and capability of the system.

All important components are located in accessible locations to facilitate periodic inspection during normal plant operation. Suitable manholes, handholes, inspection ports, or other design and layout features are provided for this purpose.

These features meet the requirements of Criterion 45.

For further discussion, see the following sections:

a.	Principal design criteria	1.2
b.	Inservice inspection of Class 2 and 3 components	6.6
c.	Standby service water system	9.2.7
d.	Initial test program	14

3.1.2.4.17 Criterion 46 - Testing of Cooling Water System

> The cooling water system shall be designed to permit appropriate periodic pressure and functional testing to assure (1) the structural and leaktight integrity of its components, (2) the operability and performance of the active components of the system, and (3) operability of the system as a whole and, under conditions as close to design as practical, the performance of the full operational sequence that brings the system into operation for reactor shutdown and for loss-of-coolant accidents, including operation of applicable portions of the protection system and the transfer between normal and emergency power sources (GDC 46).

Evaluation Against Criterion 46

The SW system is designed to permit system operability testing with simulation of emergency reactor shutdown or LOCA conditions and transfer between normal and emergency power sources.

For further discussion, see the following sections:

a.	Principal design criteria	1.2
b.	Standby service water system	9.2.7
c.	Electric power	8
d.	Initial test program	14

3.1.2.5 Group V - Containment (Criteria 50-57)

Although Columbia's design of containment isolation provisions for the lines penetrating containment do not satisfy the requirements of GDC 55 and 56 or 57 or the alternative acceptance criteria in Item II, Section 6.2.4 of the SRP, Columbia's design meets acceptable isolation criteria on other defined acceptance bases as provided by GDC 55 and 56.

As evidenced by Columbia's design documents, Columbia's containment design is as it was described decades ago at original licensing of the plant. Hence, the FSAR crediting of outboard check valves as GDC 55 compliant PCIVs for isolation outside containment remains valid and consistent with the staff conclusion reflected in NUREG-0892.

3.1.2.5.1 Criterion 50 - Containment Design Basis

The reactor containment structure, including access openings, penetrations, and containment heat removal system shall be designed so that the containment structure and its internal compartments can accommodate, without exceeding the design leakage rate and with sufficient margin, the calculated pressure and temperature conditions resulting from any loss-of-coolant accident. This margin shall reflect consideration of (1) the effects of potential energy sources which have not been included in the determination of the peak conditions, such as energy in steam generators and energy from metal-water and other chemical reactions that may result from degraded emergency core cooling functioning, (2) the limited experience and experimental data available for defining accident phenomena and containment responses, and (3) the conservatism of the calculational model and input parameters (GDC 50).

Evaluation Against Criterion 50

The containment structure, including access openings and penetrations, are designed to accommodate, without exceeding the design leak rate, the transient peak pressure and temperature associated with a LOCA up to and including a double-ended rupture of the largest reactor coolant pipe.

The containment structure and ESF systems have been evaluated for various combinations of energy release. The analysis accounts for system thermal energy, chemical energy, and nuclear decay heat energy.

The maximum temperature and pressure reached in the drywell and containment during the worst case accident are shown in Chapters 6 and 15 to be below the design temperature and pressure of this structure.

The cooling capacity of the containment heat removal systems is adequate to prevent overpressurization of the structure and to return the containment to near atmospheric pressure.

For further discussion, see the following sections:

a.	Classification of structures, components, and systems	3.2
b.	Wind and tornado loadings	3.3
c.	Missile protection	3.5
d.	Protection against dynamic effects associated with the postulated rupture of piping	3.6

e.	Seismic design	3.7
f.	Steel containment	3.8
g.	Containment systems	6.2
h.	Containment heat removal systems	6.2.2
i.	Accident analyses	15

3.1.2.5.2 Criterion 51 - Fracture Prevention of Containment Pressure Boundary

The reactor containment boundary shall be designed with sufficient margin to assure that under operating, maintenance, testing, and postulated accident conditions (1) its ferritic materials behave in a nonbrittle manner and (2) the probability of rapidly propagating fracture is minimized. The design shall reflect consideration of service temperatures and other conditions of the containment boundary material during operation, maintenance, testing, and postulated accident conditions, and the uncertainties in determining (1) material properties, (2) residual, steady-state, and transient stresses, and (3) size of flaws (GDC 51).

Evaluation Against Criterion 51

The containment vessel was designed, fabricated, inspected, and tested to meet the requirements of ASME Code Section III Subsection NE (1971 edition through Summer 1972 Addenda). Material for the containment was qualified by impact testing at a temperature which is at least 30°F below the minimum service temperature of +30°F. Means are provided by an auxiliary boiler to maintain the reactor building and consequently the containment temperature at a suitable level during a shutdown of the unit during cold weather.

To demonstrate that the primary containment pressure boundary meets the requirements of Criterion 51, the Class 1, Class 2, and Class MC components of the CGS containment pressure boundary were reviewed according to the fracture toughness requirements of the Summer 1977 Addenda of Section III for Class 2 components and fracture toughness data presented in NUREG-0577, "Potential for Low Fracture Toughness and Lamellar Tearing of PWR Steam Generator and Reactor Coolant Pump Supports." Based on review of the available fracture toughness data and material fabrication histories, and the use of correlations between metallurgical characteristics and material fracture toughness, it was concluded that the ferritic materials in the CGS containment pressure boundary meet the fracture toughness requirements that are specified for Class 2 components by the 1977 Addenda of Section III of the ASME Code. Compliance with these code requirements provide reasonable assurance that the CGS reactor containment pressure boundary materials will behave in a nonbrittle manner,

that the probability of rapidly propagating fracture will be minimized, and that the requirements of Criterion 51 are satisfied.

The preoperational test program and the quality assurance program ensure the integrity of the containment and its ability to meet all normal operating and accident requirements.

The containment design thus meets the requirements of Criterion 51.

For further discussion, see the following sections:

a.	Steel containment	3.8.2
b.	Reactor building ventilation system including spent fuel pool area ventilation system	9.4
c.	Initial test program	14
d.	Quality assurance	17

3.1.2.5.3 Criterion 52 - Capability for Containment Leakage Rate Testing

The reactor containment and other equipment which may be subjected to containment test conditions shall be designed so that periodic integrated leakage rate testing can be conducted at containment design pressure (GDC 52).

Evaluation Against Criterion 52

The containment system is designed and constructed and the necessary equipment is provided to permit periodic integrated leak rate tests during the plant lifetime. The testing program will be conducted in accordance with Appendix J to 10 CFR Part 50.

For further discussion, see the following sections:

a.	Leak rate tests	3.8.2
b.	Containment leakage testing	6.2.6

3.1.2.5.4 Criterion 53 - Provisions for Containment Testing and Inspection

The reactor containment shall be designed to permit (1) appropriate periodic inspection of all important areas, such as penetrations, (2) an appropriate surveillance program, and (c) periodic testing at containment design pressure of

the leaktightness of penetrations which have resilient seals and expansions bellows (GDC 53).

Evaluation Against Criterion 53

The reactor containment design permits periodic inspection of the exposed interior surfaces. It also includes provisions for periodic testing of the leaktightness of all penetrations and inserts in the reactor containment pressure boundary.

The containment design therefore meets the requirements of Criterion 53.

For further discussion, see the following sections:

a.	Steel containment	3.8.2
b.	Containment functional design	6.2.1
c.	Containment heat removal systems	6.2.2
d.	Containment leakage testing	6.2.6
e.	Inservice inspection of Class 2 and 3 components	6.6

3.1.2.5.5 Criterion 54 - Piping Systems Penetrating Containment

Piping systems penetrating primary reactor containment shall be provided with leak detection, isolation, and containment capabilities having redundancy, reliability, and performance capabilities which reflect the importance to safety of isolating these piping systems. Such piping systems shall be designed with a capability to test periodically the operability of the isolation valves and associated apparatus and to determine if valve leakage is within acceptable limits (GDC 54).

Evaluation Against Criterion 54

Piping systems penetrating containment are designed to provide the required isolation and testing capabilities. These piping systems are provided with test connections to allow periodic leak detection tests to be performed.

The ESF actuation system test circuitry provides the means for testing isolation valve operability.

Conformance with Criterion 54 is further discussed in Sections 3.1.2.5.6 (Criterion 55), 3.1.2.5.7 (Criterion 56), and 3.1.2.5.8 (Criterion 57).

3.1.2.5.6 Criterion 55 - Reactor Coolant Pressure Boundary Penetrating Containment

Each line that is part of the reactor coolant pressure boundary and that penetrates primary reactor containment shall be provided with containment isolation valves as follows, unless it can be demonstrated that the containment isolation provisions for a specific class of lines, such as instrument lines, are acceptable on some other defined basis:

(1) One locked closed isolation valve inside and one locked closed isolation valve outside containment; or

(2) One automatic isolation valve inside and one locked closed isolation valve outside containment; or

(3) One locked closed isolation valve inside and one automatic isolation valve outside containment. A simple check valve may not be used as the automatic isolation valve outside containment; or

(4) One automatic isolation valve inside and one automatic isolation valve outside containment. A simple check valve may not be used as the automatic isolation valve outside containment.

Isolation valves outside containment shall be located as close to the containment as practical and upon loss of actuating power, automatic isolation valves shall be designed to take the position that provides greater safety.

Other appropriate requirements to minimize the probability or consequences of an accidental rupture of these lines or of lines connected to them shall be provided as necessary to assure adequate safety. Determination of the appropriateness of these requirements, such as higher quality in design, fabrication, and testing, additional provisions for inservice inspection, protection against more severe natural phenomena, and additional isolation valves and containment, shall include consideration of the population density, use characteristics, and physical characteristics of the site environs (GDC 55).

Evaluation Against Criterion 55

The RCPB [as defined in 10 CFR Part 50, Section 50.2 (v)] consists of the RPV, pressure retaining appurtenances attached to the vessel, valves, and pipes which extend from the RPV up to and including the outermost isolation valve. The RCPB lines which penetrate the

containment have isolation valves capable of isolating the containment to preclude any significant releases of radioactivity. Lines which do not penetrate the containment but which form a portion of the RCPB, can be isolated from the RCPB.

The design of the isolation systems described meet the requirements of Criterion 55.

For further discussion, see the following sections:

a.	Integrity of RCPB	5.2
b.	Containment isolation system	6.2.4
c.	Instrumentation and controls	7
d.	Accident analyses	15

3.1.2.5.7 Criterion 56 - Primary Containment Isolation

Each line that connects directly to the containment atmosphere and penetrates primary reactor containment shall be provided with containment isolation valves as follows, unless it can be demonstrated that the containment isolation provisions for a specific class of lines, such as instrument lines, are acceptable on some other defined basis:

(1) One locked closed isolation valve inside and one locked closed isolation valve outside containment; or

(2) One automatic isolation valve inside and one locked closed isolation valve outside containment; or

(3) One locked closed isolation valve inside and one automatic isolation valve outside containment. A simple check valve may not be used as the automatic isolation valve outside containment; or

(4) One automatic isolation valve inside and one automatic isolation valve outside containment. A simple check valve may not be used as the automatic isolation valve outside containment.

Isolation valves outside containment shall be located as close to the containment as practical and upon loss of actuating power, automatic isolation valves shall be designed to take the position that provides greater safety (GDC 56).

Evaluation Against Criterion 56

Criterion 56 requires that lines which penetrate the containment and communicate with the containment interior must have two isolation valves; one inside the containment, the other outside. It should be noted that this criterion does not reflect consideration of the BWR suppression pool design. For instance, those lines which connect to the suppression pool do not have an isolation valve located inside the containment as this would necessitate placement of the valve underwater. In effect, this would result in introducing a potentially unreliable valve in a highly reliable system thereby compromising design.

The manner in which the containment isolation system meets this requirement is described in the following sections:

a.	Containment isolation system	6.2.4
b.	Instrumentation and control systems	7
c.	Primary containment and reactor vessel isolation control system instrumentation and controls	7.3
d.	Accident analyses	15

3.1.2.5.8 Criterion 57 - Closed System Isolation Valves

Each line that penetrates primary reactor containment and is neither part of the reactor coolant pressure boundary nor connected directly to the containment atmosphere shall have at least one containment isolation valve which shall be either automatic, or locked closed, or capable of remote manual operation. This valve shall be outside containment and located as close to the containment as practical. A simple check valve may not be used as the automatic isolation valve (GDC 57).

Evaluation Against Criterion 57

Each line that penetrates the reactor containment and is neither part of the RCPB nor connected directly to the containment atmosphere has at least one containment isolation valve which is automatic, locked closed or capable of remote manual operation, located outside the containment as close to the containment as practical. Simple check valves are not used as automatic isolation valves on these lines.

Details demonstrating conformance with Criterion 57 are provided in the following sections:

a. Containment isolation system 6.2.4

b. Instrumentation and controls 7

3.1.2.6 Group VI - Fuel and Reactivity Control

3.1.2.6.1 Criterion 60 - Control of Releases of Radioactive Materials to the Environment

The nuclear power unit design shall include means to control suitably the release of radioactive materials in gaseous and liquid effluents and to handle radioactive solid wastes produced during normal reactor operation, including anticipated operational occurrences. Sufficient holdup capacity shall be provided for retention of gaseous and liquid effluents containing radioactive materials, particularly where unfavorable site environmental conditions can be expected to impose unusual operational limitations upon the release of such effluents to the environment (GDC 60).

Evaluation Against Criterion 60

Waste handling systems have been incorporated in the plant design for processing and/or retention of radioactive wastes from normal plant operations to ensure that the effluent releases to the environment are as low as reasonably achievable (ALARA) and within the limits of 10 CFR Part 20. The plant is also designed to prevent radioactivity releases during accidents from exceeding the limits of 10 CFR Part 100.

The principal gaseous effluents from the plant during normal operation are the noncondensable gases from the air ejectors. These gases are exhausted through a hold up system and offgas treatment system including charcoal adsorbers. The effluent from this system is continuously monitored and controlled and the system will be shutdown and isolated in the event of abnormally high radiation levels.

Ventilation air from the various plant areas is continuously monitored and controlled. In the event of an accident inside containment, noncondensable gases are held within the leaktight containment vessel. Release of these effluents will be by controlled purging of the containment.

Liquid radioactive wastes are collected in waste collector tanks, treated on a batch basis through demineralizers, and then either returned to the plant systems or released in a controlled manner to the environment. All discharges to the environment are routed through a monitoring station that continuously monitors and records the activity of the waste and provides an alarm to the operator in the unlikely event of high activity level.

Solid wastes including spent resins, filter sludges, filter cartridges, evaporator bottoms, contaminated tools, equipment, and clothing are collected, packaged, and shipped offsite in approved shipping containers.

The design of the waste disposal systems meets the requirements of Criterion 60.

For further discussion, see the following sections:

a.	Principal design criteria	1.2
b.	Detection of leakage through RCPB	5.2.5
c.	Containment functional design	6.2.1
d.	Heating, ventilating, and air conditioning systems	9.4
e.	Liquid waste management systems	11.2
f.	Gaseous waste management systems	11.3
g.	Solid waste management system	11.4
h.	Process and effluent radiological monitoring and sampling systems	11.5
i.	Radiation protection	12
j.	Accident analyses	15

3.1.2.6.2 Criterion 61 - Fuel Storage and Handling and Radioactivity Control

The fuel storage and handling, radioactive waste, and other systems which may contain radioactivity shall be designed to assure adequate safety under normal and postulated accident conditions. These systems shall be designed (1) with a capability to permit appropriate periodic inspection and testing of components important to safety, (2) with suitable shielding for radiation protection, (3) with appropriate containment, confinement, and filtering systems, (4) with residual heat removal capability having reliability and testability that reflects the importance to safety of decay heat and other RHR, and (5) to prevent significant reduction in fuel storage coolant inventory under accident conditions (GDC 61).

Evaluation Against Criterion 61

3.1.2.6.2.1 New Fuel Storage. New fuel is placed in dry storage in the new fuel storage vault which is located inside the reactor building. The storage vault within the reactor building provides adequate shielding for radiation protection. Storage racks preclude accidental criticality (see evaluation against Criterion 62). The new fuel storage racks do not require any special inspection and testing for nuclear safety purposes.

3.1.2.6.2.2 Spent Fuel Handling and Storage. Irradiated fuel is stored in the spent fuel pool in the reactor building. Fuel pool water is circulated through the FPC system to maintain fuel pool water temperature, purity, water clarity, and water level. Storage racks preclude accidental critically (see evaluation against Criterion 62).

Reliable decay heat removal is provided by the closed loop FPC system. It consists of two circulating pumps, two heat exchangers, two filter-demineralizers, two skimmer surge tanks, and the associated piping, valves, and instrumentation. The pool water is circulated through the system, suction is taken from fuel pool skimmer surge tanks, flow passes in series through the heat exchangers and filters, and it is discharged through diffusers at the bottom of the fuel pool. Normal source of cooling water to the heat exchangers is from the reactor closed cooling water (RCC) system. When the preferred RCC source is unavailable, the SW system provides cooling water and makeup. The FPC system can also be interconnected with the RHR system to increase the cooling capacity of the FPC system. See Section 9.1.3.

The portion of the system required for cooling of spent fuel after refueling is designed to Seismic Category I requirements and can be isolated by automatic redundant, Seismic Category I isolation valves from the Seismic Category II cleanup portion of the system. Safety-grade cooling water from the SW system is available to the shell side of the FPC heat exchangers by remote-manual operation from the control room. Safety-grade makeup water to the fuel pool is also available from the SW system by remote-manual operation from the control room.

High- and low-level switches indicate pool water level changes in the main control room. Fission product concentration in the pool water is minimized by use of the filter-demineralizer. This minimizes the release of radioactivity from the pool to the reactor building environment.

No special tests are required to ensure system operability, except as noted below, because at least one pump, with a heat exchanger, and filter-demineralizer is routinely in operation while fuel is stored in the pool. Routine visual inspection of the system components, instrumentation, and trouble alarms is adequate to verify system operability.

Service water flow to the shell side of the fuel pool cooling heat exchangers, including operation of the valves that interconnect the service water and RCC systems to the FPC system, are tested in conjunction with testing of the service water system. The service water makeup isolation valves are also tested in conjunction with testing of the service water system.

3.1.2.6.2.3 Radioactive Waste Systems. The radioactive waste systems provide all equipment necessary to collect, process, and prepare for disposal of all radioactive liquids, gases, and solid waste produced as a result of reactor operation.

Liquid radwastes are segregated and treated as equipment drain, floor drain, chemical, detergent, sludges, or concentrated wastes. Processing methods include filtration, ion exchange, neutralization, concentration, solidification, analysis, and dilution. Liquid wastes are also decanted and sludge is accumulated for disposal as solid radwaste. Wet solid wastes and concentrates are normally dewatered and packaged in steel or polyethylene containers as required for disposal. Dry solid radwastes are packaged in steel boxes or other suitable containers. Gaseous radwastes are monitored, processed, recorded, and controlled so that radiation doses to persons outside the controlled area are below those allowed by applicable regulations.

Accessible portions of the refueling and radwaste buildings have sufficient shielding to maintain dose rates within the limits set forth in 10 CFR Part 20 and 10 CFR Part 50. The radwaste building is designed to preclude accidental release of radioactive materials to the environs.

The radwaste systems are used on a routine basis and do not require specific testing to ensure operability. Performance is monitored by radiation monitors during operation.

The fuel storage and handling and radioactive waste systems are designed to ensure adequate safety under normal and postulated accident conditions. The design of these systems meets the requirements of Criterion 61.

For further discussion, see the following sections:

a.	RHR system	5.4.7
b.	Containment systems	6.2
c.	New fuel storage	9.1.1
d.	Spent fuel storage	9.1.2
e.	Spent fuel pool cooling and cleanup system	9.1.3

f. Heating, ventilating, and air conditioning systems 9.4

g. Radioactive waste management 11

h. Radiation protection 12

3.1.2.6.3 Criterion 62 - Prevention of Criticality in Fuel Storage and Handling

Criticality in the fuel storage and handling system shall be prevented by physical systems or processes, preferably by use of geometrically safe configurations (GDC 62).

Evaluation Against Criterion 62

Appropriate plant fuel handling and storage facilities are provided to preclude accidental criticality for new and spent fuel. Criticality in new and spent fuel storage is prevented by the geometrically safe configuration of the new fuel storage racks and by the geometrically safe configuration of the spent fuel racks using fixed poison. There is sufficient spacing between assemblies to ensure that the array when fully loaded is substantially subcritical. Fuel elements are limited to top loading and fuel assembly positions by rack design. The new and spent fuel racks are Seismic Category I components.

Spent fuel and new fuel is stored under water in the spent fuel pool. The racks in which spent fuel assemblies are placed are designed to ensure subcriticality in the storage pool. Fuel is maintained at a subcritical multiplication factor k_{eff} of less than 0.95 under both normal and abnormal conditions. Abnormal criticality conditions may result for abnormal conditions. Abnormal criticality conditions may result from accidental dropping of a fuel assembly to a location adjacent to or on top of a loaded fuel storage rack. Various abnormal loading conditions such as loadings from the operating basis earthquake (OBE) and safe shutdown earthquake (SSE), the dropping of a fuel assembly, or a stuck assembly exerting an upward force on the racks were also considered in the design of the racks.

Refueling interlocks include circuitry which senses conditions of the refueling equipment and the control rods. These interlocks reinforce operational procedures that prohibit making the reactor critical. The fuel handling system is designed to provide a safe, effective means of transporting and handling fuel and to minimize the possibility of mishandling or maloperation.

The use of geometrically safe configurations for new and spent fuel storage, the use of fixed neutron poison in the spent fuel racks, and the design of fuel handling systems precludes accidental criticality in accord with Criterion 62.

For further discussion, see the following sections:

a.	Refueling interlocks system instrumentation and controls	7.7.1.13
b.	New fuel storage	9.1.1
c.	Spent fuel storage	9.1.2
d.	Fuel handling system	9.1.4

3.1.2.6.4 Criterion 63 - Monitoring Fuel and Waste Storage

Appropriate systems shall be provided in fuel storage and radioactive waste systems and associated handling areas, (1) to detect conditions that may result in loss of residual heat removal capability and excessive radiation levels and (2) to initiate appropriate safety actions (GDC 63).

Evaluation Against Criterion 63

Appropriate systems have been provided to meet the requirements of this criterion. A malfunction of the FPC system which could result in loss of RHR capability and excessive radiation levels is alarmed in the control room. Alarmed conditions include high/low level in the fuel pool, cooling water pump discharge pressure low, and high/low level in the fuel storage pool skimmer surge tanks. System temperature is also continuously monitored and alarmed in the control room. The area radiation monitors sense radioactivity in this area and initiate an alarm in the control room on abnormal radiation levels.

Area radiation, tank, and sump levels are monitored and alarmed to give indication of conditions that may result in excessive radiation levels in radioactive waste system areas. These systems satisfy the requirements of Criterion 63.

For further discussion, see the following sections:

a.	Area radiation monitoring system instrumentation	12.3.4
b.	Fuel storage and handling	9.1
c.	Radioactive waste management	11
d.	Radiation protection	12

3.1.2.6.5 Criterion 64 - Monitoring Radioactivity Releases

> Means shall be provided for monitoring the reactor containment atmosphere, spaces containing components for recirculation of loss-of-coolant accident fluids, effluent discharge paths, and the plant environs for radioactivity that may be released from normal operations, including anticipated operational occurrences, and from postulated accidents (GDC 64).

Evaluation Against Criterion 64

Means have been provided for monitoring radioactivity releases resulting from normal and anticipated operational occurrences. The following potential station release paths are monitored:

a. Main plant vent monitor,

b. Turbine building ventilation exhaust,

c. Radwaste building ventilation exhaust,

d. Liquid radwaste system effluent,

e. Standby service water system,

f. Plant service water,

g. Containment monitoring system radiation monitors, and

h. Turbine building sumps.

In addition, offsite monitors are provided.

For further discussion of the means and equipment used for monitoring radioactivity releases, see the following sections:

a.	Detection of leakage through RCPB	5.2.5
b.	Process radiation monitoring system instrumentation and controls	7.6
c.	Process and effluent radiological monitoring systems and sampling systems	11.5
d.	Area radiation and airborne radioactivity monitoring instrumentation	12.3.4

3.2 CLASSIFICATION OF STRUCTURES, COMPONENTS, AND SYSTEMS

Appendix A of 10 CFR Part 50 requires that all nuclear power plants be designed so that, if the safe shutdown earthquake (SSE) occurs, all structures, systems, and components (SSCs) important to safety remain functional.

General Design Criterion 1 (GDC 1) of Appendix A to 10 CFR Part 50 requires that SSCs important to safety be designed, fabricated, erected, and tested to quality standards commensurate with the importance of the safety function to be performed.

3.2.1 SEISMIC CLASSIFICATION

Plant structures, systems, and components important to safety are designed to withstand the effects of an SSE and remain functional if they are necessary to ensure

a. The integrity of the reactor coolant pressure boundary (RCPB),

b. The capability to shut down the reactor and maintain it in a safe shutdown condition, or

c. The capability to prevent or mitigate the consequences of accidents which could result in potential offsite exposure comparable to the exposure limits of 10 CFR Part 50.67.

Plant structures, systems, equipment, and components, including their foundations and supports, designed to remain functional in the event of an SSE are designated as Seismic Category I, as indicated in Table 3.2-1.

All Seismic Category I SSCs are analyzed under the loading conditions of the SSE and the operating basis earthquake (OBE). Since the two earthquakes vary in intensity, the design of Seismic Category I structures, components, equipment, and systems to resist each earthquake and other loads are based on levels of material stress or load factors, whichever is applicable, with margins of safety appropriate for each earthquake. The margin of safety provided for Seismic Category I structures, components, equipment, and systems for the SSE are sufficient to ensure that their design functions are not jeopardized.

For further details of seismic design criteria refer to

Seismic design	3.7
Design of Category I structures	3.8
Systems and components	3.9

Seismic qualification of Seismic Category I instrumentation and electrical equipment	3.10

All SSCs not analyzed under the loading conditions of the SSE and OBE are classified Seismic Category II. Where applicable, the seismic loading conditions as determined from the Uniform Building Code are used for the design of Seismic Category II SSCs.

The OBE, as defined in 10 CFR Part 100, Appendix A, is not incorporated as part of the seismic classification scheme.

The seismic classification indicated in Table 3.2-1 meets the requirements of NRC Regulatory Guide 1.29, Revision 3, except as otherwise noted in the table.

Seismic Category 1M classification denotes systems, structures or components that are designed and constructed to comply with position C.2 of Regulatory Guide 1.29.

3.2.2 SYSTEM QUALITY GROUP CLASSIFICATIONS

System quality group classifications, as defined in NRC Regulatory Guide 1.26, Revision 3, are determined for each water, steam, or radioactive waste containing component of those applicable fluid systems relied on to ensure

a. The integrity of the RCPB,

b. The capability to shut down the reactor and maintain it in a safe shutdown condition, or

c. The capability to prevent or mitigate the consequences of accidents which could result in potential offsite exposure comparable to the exposure limits of 10 CFR Part 50.67.

The quality group classifications for systems and components which meet these definitions are shown in Table 3.2-1.

System quality group classifications, as indicated in Tables 3.2-1 and 3.2-2, meet the requirements of 10 CFR 50.55a and Regulatory Guide 1.26, Revision 3.

Note: Classification of the RWCU system in the Radwaste Building takes exception to Reg. Guide 1.26. Piping, pumps, valves, and supports of the RWCU system in the Radwaste Building have been reclassified as Quality Group D, taking exception to the Reg. Guide 1.26 recommended classification of Quality Group C.

3.2.3 SAFETY CLASSIFICATIONS

Structures, systems, and components were classified as Safety Class 1, Safety Class 2, Safety Class 3, or General Class G in accordance with the ANS-22 definition of their importance to nuclear safety (ANS-22 became ANSI/ANS-52.1-1983). Recognizing that components within a system may be of differing safety importance, a single system may have components in more than one safety class. Supports are designed in accordance with ASME III-Winter 1973 Addenda-Subsection NF and are classified appropriately based on the component supported. Jurisdictional boundaries between NF and other codes were established by the owner as required by the ASME Code. Load combinations and allowable stresses used in support design are in accordance with ASME III-NF as defined in Section 3.9 and are applied to both ASME and the American Institute of Steel Construction (AISC) support members. Modifications and construction practices are controlled by the quality classification of the individual support and by the additional requirements of each applicable code. Table 3.2-1 provides a summary of the safety classes for the principal SSCs of the plant.

Design requirements for components of safety classes are also described in this section. Reference is made to accepted industry codes and standards which define design requirements commensurate with the safety function(s) performed.

3.2.3.1 Safety Class 1

3.2.3.1.1 Definition of Safety Class 1

Safety Class 1 applies to components of the RCPB or core support structure whose failure could cause a loss of reactor coolant at a rate in excess of the normal makeup system or to equipment in which a single failure could cause major fuel damage.

3.2.3.1.2 Design Requirements for Safety Class 1

The design requirements for Safety Class 1 mechanical equipment (i.e., vessel, pipes, pumps, and valves) are described in Section 3.9. The design requirements for the reactor vessel are described in Section 5.3.

The design requirements for Safety Class 1 structures (i.e., reactor pedestal and supports of the RCPB as defined in Section 3.2.3.1.1) are specified in Sections 3.8 and 3.9.

Safety Class 1 SSCs are identified in Table 3.2-1.

3.2.3.2 Safety Class 2

3.2.3.2.1 Definition of Safety Class 2

Safety Class 2 applies to those SSCs, other than service water systems, that are not Safety Class 1 but are necessary to accomplish the safety function of

a. Inserting negative reactivity to shut down the reactor,
b. Preventing rapid insertion of positive reactivity,
c. Maintaining core geometry appropriate to all plant process conditions,
d. Providing emergency core cooling,
e. Providing and maintaining containment, and
f. Removing residual heat from the reactor and reactor core.

3.2.3.2.2 Design Requirements for Safety Class 2

The design requirements for Safety Class 2 mechanical equipment (i.e., vessels including heat exchangers, pipes, pumps, valves, and tanks) are described in Section 3.9.

The design requirements for Safety Class 2 structures (i.e., reactor building including the primary containment) are specified in Section 3.8.

The seismic and environmental design requirements for Safety Class 2 instrumentation and electrical equipment are specified in Sections 3.10 and 3.11.

Safety Class 2 SSCs are identified in Table 3.2-1.

3.2.3.3 Safety Class 3

3.2.3.3.1 Definition of Safety Class 3

Safety Class 3 applies to those SSCs that are not Safety Class 1 nor Safety Class 2 that is relied upon to accomplish a nuclear safety function.

3.2.3.3.2 Design Requirement for Safety Class 3

The design requirements for Safety Class 3 structures, (i.e., standby service water pump houses, diesel generator buildings, radwaste/control building, and spray ponds) are specified in Section 3.8.

The design requirements for Safety Class 3 mechanical equipment (i.e., vessels including heat exchangers, pipes, pumps, valves, and tanks) are described in Section 3.9.

The seismic and environmental design requirements for Safety Class 3 instrumentation and electrical equipment are specified in Sections 3.10 and 3.11.

3.2.3.4 General Class G, Structures, Systems, and Components

3.2.3.4.1 Definition of General Class Structures, Systems, and Components

A boiling water reactor (BWR) has a number of SSCs in the power conversion or other portions of the facility which have no direct safety function but which may be connected to or

influenced by the equipment within the safety classes defined above. Such SSCs are designated as General Class G. For example, portions of the service water systems, the turbine generator auxiliaries, and portions of the heating, ventilating, and air conditioning (HVAC) systems are designated as having no safety classification.

3.2.3.4.2 Design Requirements for General Class G Structures, Systems, and Components

The design requirements for equipment classified as General Class G are specified with appropriate consideration of the intended service of the equipment and expected plant and environmental conditions under which it will operate. Design requirements are based on applicable industry codes and standards.

3.2.4 QUALITY ASSURANCE CLASSIFICATION

Structures, systems, and components are classified in Table 3.2-1 using the following quality class designations

a. Quality Class I - Any nuclear system, structure, subassembly, component, or design characteristics that prevent or mitigate the consequences of postulated accidents that could cause undue risk to the health and safety of the public. All engineered safety features fall within this category. All Quality Class I items meet the applicable provisions of 10 CFR Part 50 Appendix B.

b. Quality Class II+ - Assigned to SSCs having no safety-related function but requiring quality augmentation either as a result of NRC requirements or as committed by CGS. Quality augmentation may include such requirements as environmental qualification, seismic qualification, or other quality affecting activities specifically committed. Augmented quality applies to the following categories of SSCs:

1. Essential fire protection SSCs,

2. Structures, systems, and components that do not perform a safety-related function but must be seismically supported/mounted (seismic 2-over-1) per Regulatory Guide 1.29,

3. Structures, systems, and components required for radwaste management that are subject to Regulatory Guide 1.143,

4. Structures, systems, and components required to cope with a station blackout per Regulatory Guide 1.155 (see Section 8A),

5. Structures, systems, and components required to respond to or mitigate anticipated transients without scram (ATWS) per the requirements of 10 CFR 50.62,

6. Structures, systems, and components required to respond to an electrical separation safe shutdown event (see Section 8.3.1.4.4.1.4),

7. Postaccident monitoring instruments subject to Regulatory Guide 1.97, Category 2, requirements,

8. Remote shutdown items required in response to control room evacuation (10 CFR 50 Appendix A, GDC 19) and,

9. Beyond Design Basis External Event (BDBEE) structures, systems, and components associated with Spent Fuel Level Instrumentation per requirements of NRC Order EA-12-051 and portions of the HCV system per the requirements of NRC Order EA-13-109.

c. Quality Class II - Any system, structure, subassembly, component, or design characteristic that could cause a safety hazard to plant personnel, an extended reduction in unit output, an unscheduled unit trip, or equipment damage. Appropriate quality assurance requirements for these items are assigned in the purchase specifications.

d. Quality Class G - Any nonnuclear system, structure, subassembly, component, or design characteristic to which quality assurance requirements are assigned in accordance with the consequences of failure, operating costs, or procurement costs.

3.2.5 CORRELATION OF SAFETY CLASSES WITH OTHER DESIGN REQUIREMENTS

The design of plant equipment is commensurate with the safety importance of the equipment. Hence, the various safety classes have a gradation of design requirements. The correlation of safety classes with other design requirements is summarized in Table 3.2-3.

3.2.6 IDENTIFICATION OF SAFETY-RELATED SYSTEMS AND COMPONENTS ON FLOW DIAGRAMS AND IN THE MASTER EQUIPMENT LIST

The system classification are shown on the flow diagrams using symbols code group A, B, C, D, D+; Seismic Category I, II; and Quality Class I, II, II+, and G. The Master Equipment List (MEL) uses arabic number designators for quality class and seismic category. The following is a comparison of the classification designators:

Flow Diagram	Table 3.2-1	MEL
Code Group A	Quality Group A	
Code Group B	Quality Group B	
Code Group C	Quality Group C	
Code Group D	Quality Group D	
Code Group D+	Quality Group D+	
Seismic Category I	Seismic Category I*	Seismic Category 1* Seismic Category 1M*
Seismic Category II	Seismic Category II*	Seismic Category 2*
Quality Class I	Quality Class I	Quality Class 1
Quality Class II	Quality Class II	Quality Class 2
Quality Class II+	Quality Class II+	Quality Class A
Quality Class G	Quality Class G	Quality Class G

Flow diagrams which include the seismic and code classifications assigned to each piping system are identified in Table 3.2-1. The flow diagrams delineate the boundary of seismic and code classifications for each system and present the as-built classifications. For the appropriate quality class of specific components, refer to the MEL. In some instances, these classifications reflect voluntary upgrades which may exceed Regulatory Guide 1.26, Revision 3, requirements. For inservice inspection requirements, the appropriate levels of inspection are given in Sections 5.2.4 and 6.6.

Note: Classification of the RWCU system in the Radwaste Building takes exception to Reg. Guide 1.26. Piping, pumps, valves, and supports of the RWCU system in the Radwaste Building have been reclassified as Quality Group D, taking exception to the Reg. Guide 1.26 recommended classification of Quality Group C.

* Table 3.2-1 may indicate Seismic Category I, 1M or II. Clarification of the Seismic 2 over 1 (i.e., 1M) support/mounting requirements is specified in the notes and/or MEL (see Table 3.2-1).

Table 3.2-1

Equipment Classification

Principal Component[a]	Scope of Supply[b]	Safety Class[c]	Location[d]	Quality Group Classification[e]	Quality Class[f]	Seismic Category[g]	Notes[h]
1. Reactor system							
Reactor vessel	GE	1	C	A	I	I	
Reactor vessel support skirt	GE	1	C	N/A	I	I	
Reactor vessel appurtenances pressure retaining portions	GE	1	C	A	I	I	
Control rod drive housing supports	GE	2	C	N/A	I	I	
Reactor internal structures, engineered safety features	GE	2	C	N/A	I	I	
Reactor internal structures, other	GE	G	C	N/A	N/A	N/A	
Control rods	GE	2	C	N/A	I	I	
Control rod drives	GE	2	C	N/A	I	I	
Core support structure	GE	2	C	N/A	I	I	
Power range detector hardware	GE	2	C	B	I	I	
Fuel assemblies	P	1	C	N/A	I	I	
Reactor vessel stabilizer	GE	2	C	N/A	I	I	
2. Nuclear boiler system (Figure 10.3-2)							
Vessels, level instrumentation condensing chambers	GE	1	C	A	I	I	
Vessels	P	2	C	B	I	I	
Piping, relief valve discharge from relief valve to suppression pool	P	3	C	C	I	I	
Piping, relief valve discharge within suppression chamber and suppression pool	P	2	C	B	I	I	1
Piping, main steam and feedwater within outermost isolation valve	GE/P	1	C,R	A	I	I	
Pipe supports, main steam	GE	1	C,R	A	I	I	
Pipe restraints, main steam	P	2	C,R	N/A	I	I	
Piping, other within outermost isolation valves	P	1	C,R	A	I	I	2
Safety/relief valves	GE	1	C	A	I	I	
Valves, main steam isolation valves	GE		C,R	A	I	I	
Valves, other, isolation valves and within containment	P	1	C	A	I	I	

Table 3.2-1

Equipment Classification (Continued)

Principal Component[a]	Scope of Supply[b]	Safety Class[c]	Location[d]	Quality Group Classification[e]	Quality Class[f]	Seismic Category[g]	Notes[h]
Piping and valves outboard of outside isolation valve to and including first valve capable of timely actuation	P	2	R	B	I	I	2
Mechanical modules, instrumentation (with safety function)	GE	2	C,R	N/A	I	I	
Electrical modules (with safety function)	GE	2	C,R	N/A	I	I	
Cable (with safety function)	P	2	C,R,W	N/A	I	I	
3. Reactor recirculation system (Figure 5.4-7)							
Piping	GE	1	C	A	I	I	2
Pipe suspension, recirculation line	GE	1	C	N/A	I	I	
Pipe restraints, recirculation line	GE	2	C	N/A	I	I	
Pumps	GE	1	C	A	I	I	
Valves	GE	1	C	A	I	I	2
Motor, pump	GE	3	C	N/A	II+	I/IM	37
Electrical modules (with safety function)	GE	2	C,R	N/A	I	I	
Cable (with safety function)	P	2	C,R,W	N/A	I	I	
4. Control rod drive hydraulic system (Figure 4.6-5)							
Valves, scram discharge volume lines	GE/P	2	R	B	I	I	2
Valves, insert and withdraw lines	GE	2	R	B	I	I	3
Valves, other	P	G	R	D	II	II	2,4
Piping discharge volume lines	P	2	R	B	I	I	
Piping insert and withdraw lines	GE/P	2	C,R	B	I	I	
Piping, other	P	G	R	D	II	II	2,4
Hydraulic control unit	GE	2	R	Special	I	I	5
Electrical modules (with safety function)	GE	2	R	N/A	I	I	
Cables (with safety function)	P	2	C,R,W	N/A	I	I	

Table 3.2-1

Equipment Classification (Continued)

Principal Component[a]	Scope of Supply[b]	Safety Class[c]	Location[d]	Quality Group Classification[e]	Quality Class[f]	Seismic Category[g]	Notes[h]
5. Standby liquid control system (Figure 9.3-14)							6
Standby liquid control tank	GE	2	R	B	II+	I	
Pump	GE	2	R	B	II+	I	
Pump motor	GE	2	R	N/A	II+	I	
Valves, explosive	GE	1	R	A	I	I	
Valves, isolation and within containment	P	1	C	A	I	I	2
Valves, beyond isolation valves	P	2	R	B	II+	I	2
Piping, within isolation valves to reactor vessel	P	1	C,R	A	I	I	2
Piping, beyond isolation valves	P	2	R	B	II+	I	2
Electrical modules (with safety function)	GE	2	C	N/A	I	I	
Cable (with safety function)	P	2	C,R,W	N/A	I	I	
Electrical modules, with boron injection function	GE	2	C	N/A	II+	I	
Cable, with boron injection function	P	2	C,R,W	N/A	II+	I	
6. Neutron monitoring system							
Tubing TIP	GE/P	2/G	C	B/D	I/II	I/II	
Electrical modules, IRM and APRM	GE	2	C,R	N/A	I	I	
Cable, IRM and APRM	P	2	C,R,W	N/A	I	I	
Valves, isolation TIP subsystem	GE/P	2	C,R	B	I	I	
Power range detector hardware	GE	2	R	B	I	I	
7. Reactor protection							
Electrical modules	GE	2	C,R,T	N/A	I	I	
Cable	P	2	C,R,T,W	N/A	I	I	
8. Leak detection system							7
Temperature element	GE	2	C,R	N/A	I	I	
Differential temperature switch	GE	2	C,R	NA/	I	I	
Differential flow indicator	GE	2	C,R	N/A	I	I	
Pressure switch	GE	2	C,R	N/A	I	I	

Table 3.2-1

Equipment Classification (Continued)

Principal Component[a]	Scope of Supply[b]	Safety Class[c]	Location[d]	Quality Group Classification[e]	Quality Class[f]	Seismic Category[g]	Notes[h]
Differential pressure indicator switch	GE	2	C,R	N/A	I	I	
Differential flow summer	GE	2	C,R	N/A	I	I	
9. Process radiation monitors							
Electrical modules, main steam line and building ventilation monitors	GE	2	C,R,T,W	N/A	I	I	
Cable, main steam line and reactor building ventilation monitors	P	2	C,R,T,W	N/A	I	I	
10. Residual heat removal system (Figure 5.4-15)							
Heat exchangers, primary side	GE	2	R	B	I	I	
Heat exchanger, secondary side	GE	3	R	C	I	I	
Piping, within outermost isolation valves, reactor coolant pressure boundary	P	1	C,R	A	I	I	
Piping, other	P	2	R	B	I	I	8
Pumps	GE	2	R	B	I	I	
Water leg pumps	P	2	R	B	I	I	
Main Pump motors	GE/P	2	R	N/A	I	I	
Valves, isolation reactor coolant pressure boundary	P	1	C,R	A	I	I	
Valves, other	P	2	R	B	I	I	2
Mechanical modules	GE	2	R	B	I	I	
Electrical modules (with safety function)	GE	2	R	N/A	I	I	
Cable (with safety function)	P	2	C,R,W	N/A	I	I	
11. Low-pressure core spray (Figure 6.3-4)							
Piping, within outermost isolation valves to reactor vessel	P	1	C,R	A	I	I	2
Piping, beyond outermost isolation valves	P	2	R	B	I	I	2
Pumps	GE	2	R	B	I	I	
Water leg pumps	P	2	R	B	I	I	
Main Pump motors	GE	2	R	N/A	I	I	

Table 3.2-1

Equipment Classification (Continued)

Principal Component[a]	Scope of Supply[b]	Safety Class[c]	Location[d]	Quality Group Classification[e]	Quality Class[f]	Seismic Category[g]	Notes[h]
Valves, isolation, reactor coolant pressure boundary	P	1	C	A	I	I	2
Valves, other	P	2	C,R	B	I	I	2
Electrical modules (with safety function)	GE	2	R	N/A	I	I	
Cable (with safety function)	P	2	R,W	N/A	I	I	
12. High-pressure core spray (Figure 6.3-4)							
Piping, within outermost isolation valve	P	1	C,R	A	I	I	2
Piping, return test line to condensate storage tank beyond second isolation valve	P	G	R,O	D	II	II	4
Piping, beyond outermost isolation valve, other	P	2	R	B	I	I	2
Pump	GE/P	2	R	B	I	I	
Water leg pumps	P	2	R	B	I	I	
Main Pump motor	GE	2	R	N/A	I	I	
Valves, beyond diesel shutoff valves	P	3	P	C	I	I	
Valves, isolation, reactor coolant pressure boundary	P	1	C	A	I	I	
Valves, beyond isolation valves, motor operated	GE	2	R	B	I	I	2
Valves, other	P	2	R,P	B	I	I	
Electrical modules (with safety function)	GE	2	R	N/A	I	I	
Electrical auxiliary equipment	GE	3	DG	N/A	I	I	
Cable (with safety function)	P	2	W,R	N/A	I	I	
(See 38a - high-pressure core spray standby power supply)							
13. Reactor core isolation cooling system (Figure 5.4-11)							
Piping, within outermost isolation valves reactor coolant pressure boundary	P	1	C,R	A	I	I	2
Piping, beyond outermost isolation valves	P	2	R	B	I	I	2,10
Piping, drip pot discharge valve to condenser	P	G	R	D	II	II	4

Table 3.2-1

Equipment Classification (Continued)

Principal Component[a]	Scope of Supply[b]	Safety Class[c]	Location[d]	Quality Group Classification[e]	Quality Class[f]	Seismic Category[g]	Notes[h]
Piping, condenser to vacuum tank and to the condensate pump discharge; and vacuum pump discharge to the outboard check valve break flange	P	G	R	D	I	I	2
Pump	GE	2	R	B/D	I	I	
Water leg pumps	P	2	R	B	I	I	2
Valves, isolation reactor coolant pressure boundary	P	1	C, R	A	I	I	2
Valves, reactor coolant pressure boundary	P	1	R	A	I	I	2
Valves, containment isolation	P	2	R	B	I	I	
Valves, other (with safety function)	P	2	R	B/D	I	I	
Turbine	GE	2	R	N/A	I	I	9
Electrical modules (with safety function)	GE	2	R	N/A	I	I	
Cable (with safety function)	P	2	R,W	N/A	I	I	
Reactor core isolation cooling electrohydraulic system	GE	2	R	N/A	I	I	
14. Fuel service equipment							
Fuel preparation machine	GE	3	R	N/A	I	I	
General purpose grapple	GE	3	R	N/A	I	I	
New fuel inspection stand	GE	G	R	N/A	II+	1M	
15. Refueling equipment							
Refueling platform	GE	G	R	N/A	II+	1M	
Refueling bellows	P	G	C,R	D	II+	I	11
16. Storage equipment							
Fuel storage racks	GE/P	3	R	N/A	I	I	
17. Radwaste system (Figures 11.2-2, 9.3-9, 9.3-12, 11.2-3, and 11.2-4)							2,4,13, 14,36
Tanks, atmospheric	GE/P	G	W	D+	II+	II	
Heat exchangers	GE/P	G	W	D+	II+	II	

Table 3.2-1

Equipment Classification (Continued)

Principal Component[a]	Scope of Supply[b]	Safety Class[c]	Location[d]	Quality Group Classification[e]	Quality Class[f]	Seismic Category[g]	Notes[h]
Piping and valves forming part of containment boundary	P	2	C,R	B	I	I	
Piping and valves forming part of secondary containment	P	3	R	C,D	I,II+	I	36
Piping, other	P	G	W	D+	II+	II	
Pumps	GE/P	G	W	D+	II+	II	
Valves, flow control and filter system	GE/P	G	W	D+	II+	II	
Valves, other	P	G	W	D+	II+	II	
Mechanical modules	GE/P	G	W	D+	II+	II	
Radioactive equipment and floor drains and other radwaste piping and valves upstream of collector tanks	P	G	R,T,W	D+	II+	II	4
Instrumentation and control boards	GE/P	G	W	N/A	II+	II	
Concentrator	GE	G	W	D+	II+	II	
Plant discharge line	GE/P	G	W	D	II	II	15
18. Reactor water cleanup system (Figure 5.4-22)							
Vessels, filter/demineralizer	GE	G	W	C	II	II	
Regenerative Heat exchangers	P	G	R	C	II	II	
Non-Regenerative Heat exchangers	P	G	R	C	II+	1M	
Piping, within outermost isolation valves	P	1	C	A	I	I	2
Piping, beyond outermost containment isolation valves	P	G	R,W	C,D,D+	II,II+	II	2,4,38
Pumps	GE	G	R,W	C,D,D+	II,II+	II	2,4
Valves, isolation valves reactor coolant pressure boundary	P/GE	1	C,R	A	I	I	2
Valves, beyond outermost containment isolation valves	GE/P	G	R,W	C,D,D+	II,II+	II	2,4
Mechanical modules	GE	G	R,W	C,D,D+	II,II+	II	4
19. Fuel pool cooling and cleanup system (Figures 9.1-6.1 and 9.1-6.2)							
a. Cooling							
Vessels	P	3	R	C	II	I	
Heat exchangers	P	3	R	C	II	I	16
Piping	P	3	R	C	II	I	17
Pumps	P	3	R	C	II	I	18
Makeup system (normal)	P	G	R	C	II	II	4,19

Table 3.2-1

Equipment Classification (Continued)

Principal Component[a]	Scope of Supply[b]	Safety Class[c]	Location[d]	Quality Group Classification[e]	Quality Class[f]	Seismic Category[g]	Notes[h]
RHR connection	P	3	R	C	I	I	19
Makeup system (emergency)	P	3	R	C	I	I	19
b. Cleanup							
Vessels, filter/demineralizer	P	G	W	C	II	II	
Piping	P	G	R,W	C,D+	II,II+	II	4
Pumps	P	G	W	C	II	II	
Piping, suppression pool to outer isolation valves	P	2	R	B	I	I	
20. Control room panels							
Electrical modules (with safety function)	GE	2	W	N/A	I	I	
Cable (with safety function)	GE/P	2	W	N/A	I	I	
21. Local panels and racks							
Electrical modules (with safety function)	GE	2	R	N/A	I	I	
Cable (with safety function)	P	2	R	N/A	I	I	
22. Offgas system (Figure 11.3-2)							4
Tanks	GE	G	T,W	D+	II+	II	
Heat exchangers	GE	G	T,W	D+	II+	II	
Piping	P	G	T,W,O	D+	II+	II	
Pumps	GE	G	T,W	D+	II+	II	
Valves	P	G	T,W	D+	II+	II	
Mechanical modules (with safety function)	GE	G	T,W	C	II	II	
Pressure vessels	GE	G	T,W	D+	II+	II	
23. Standby service water system (Figure 9.2-12)							
Piping	P	3	P,R,DG,O,W	C	I	I	
Pumps	GE	3	P	C	I	I	
Pump motors	GE	3	P	N/A	I	I	
Valves	P	3	P,R,DG,O,W	C	I	I	
Electrical modules (with safety function)	P	3	P,R,DG,O,W	N/A	I	I	
Cable (with safety function)	P	3	P,R,DG,O,W	N/A	N/A	I	

Table 3.2-1

Equipment Classification (Continued)

Principal Component[a]	Scope of Supply[b]	Safety Class[c]	Location[d]	Quality Group Classification[e]	Quality Class[f]	Seismic Category[g]	Notes[h]
24. Turbine plant service water (Figure 9.2-1)							
Piping and valves	P	G	A,T,R,O,P, W,S	D	II,II+	II	4
Pumps	P	G	P	D	N/A	II	
25. Reactor building closed cooling water system (Figure 9.2-2)							4
Heat exchangers	P	G	R	D	II	II	
Pumps	P	G	R	D	II	II	
Tanks	P	G	R	D	II	II	
Piping and valves inside containment	P	G	C	C	II	II	
Containment isolation valves and associated piping	P	2	C,R	B	I	I	
Piping and valves in reactor building	P	G	R	D	II	II	
Piping and valves, other	P	G	W	D	II	II	
26. Primary containment cooling system (Figure 9.4-8)							
Piping and valves up to outermost isolation valves, containment purge and exhaust	P	2	C,R	B	I	I	
27. Standby gas treatment system (Figure 3.2-2)							
Filter units	P	2	R	B	I	I	
Fans	P	2	R	B	I	I	
Piping and valves	P	2	R	B	I	I	20
28. Primary containment atmospheric control system (DEACTIVATED) (Figure 3.2-3)							
Piping and valves	P	2	C,R	B	I	I	
Equipment	P	2	R	B	I	I	
29. Other heating, ventilating, and air conditioning (Figures 9.4-1, 9.4-2, and 9.4-7)							
Reactor building (nonessential)	P	G	R	N/A	II	II	4
Reactor building (essential)	P	3	R	N/A	I	I	

Table 3.2-1

Equipment Classification (Continued)

Principal Component[a]	Scope of Supply[b]	Safety Class[c]	Location[d]	Quality Group Classification[e]	Quality Class[f]	Seismic Category[g]	Notes[h]
Turbine building	P	G	G	N/A	II	II	21
Radwaste building	P	G	W	N/A	II	II	21
Control room, critical switchgear area, cable spreading area (nonessential)	P	G	W	N/A	II	II	4
Control room, critical switchgear area, cable spreading area (essential)	P	3	W	N/A	I	I	
Diesel generator building	P	3	DG	N/A	I	I	22
Standby service water pump house	P	3	P	N/A	I	I	22
30. Condensate storage and transfer (Figure 9.2-11)							
Condensate storage tank	P	G	O	C	II	II	23
Piping and valves	P	G	O,T,R,W	D	II	II	4,24
Pumps	P	G	O	D	II	II	
31. Instrument and sample lines							2
32. Fuel storage facilities							
Fuel pool/dryer separator liner	P	3	R	N/A	II	I	
Storage racks and supports	GE	3	R	N/A	I	I	
33. Building cranes							
Reactor building	P	3	R	N/A	I	I	
Turbine building	P	G	T	N/A	II	II	
Radwaste building	P	G	W	N/A	II	II	
Standby service water pump house	P	G	P	N/A	II+	1M	
Miscellaneous	P	G	P,W,T,S	N/A	II	II	
34. Instrument and service air (Figures 9.3-1.1, 9.3-1.2, 9.3-1.3, 9.3-1.4 and 9.3-1.5)							
Piping and valves	P	G	R,W,T,O	D	II	II	4
Compressors	P	G	T	D	II	II	
Vessels	P	G	T	D	II	II	
Compressor cooling system	P	G	T	D	II	II	

Table 3.2-1

Equipment Classification (Continued)

Principal Component[a]	Scope of Supply[b]	Safety Class[c]	Location[d]	Quality Group Classification[e]	Quality Class[f]	Seismic Category[g]	Notes[h]
35. Containment instrument air system (Figure 9.3-2)							
Piping and valves inside containment to and including outboard isolation valve	P	2	C,R	B	I	I	
Piping and valves to main steam relief valves	P	2	R	B	I	I	
Other piping and valves	P	G	R	D	II	II	4
Receiver	P	G	R	D	II	II	4
Piping and valves outside containment isolation valves to and including solenoid pilot valves controlling supply of nitrogen from the nitrogen bottles	P	3	R	C	I	I	
36. High-pressure core spray standby power systems (Division 3)							
Day tanks	P	3	DG	C	I	I	
Piping and valves, fuel oil system	P	3	DG	C	I	I	
Pumps, fuel oil system	P	3	DG	C	I	I	
Diesel generators	GE	2	DG	N/A	I	I	25
Electrical modules (with safety functions)	GE	2	DG	N/A	I	I	
Cable (with safety functions)	P	3	DG	N/A	I	I	
Diesel fuel storage tanks	P	3	DG	C	I	I	
Diesel generators service water supply	P	3	P	C	I	I	
Diesel starting air	P	3	DG	D	I,II	I	26,27
Diesel intake exhaust piping	P	3	DG	D	I	I	26
Diesel jacket water cooling	GE	3	DG	D	I	I	26
37. Standby ac power systems (Divisions 1 and 2)							
Storage and day tanks	P	3	DG	C	I	I	
Piping and valves, diesel oil	P	3	DG	C	I	I	
Pumps, diesel oil	P	3	DG	C	I	I	
Diesel generators	P	2	DG	N/A	I	I	25
Electrical modules (with safety function)	P	3	DG	N/A	I	I	
Diesel cooling water supply	P	3	DG	C	I	I	
Cable (with safety function)	P	3	DG	N/A	I	I	

Table 3.2-1

Equipment Classification (Continued)

Principal Component[a]	Scope of Supply[b]	Safety Class[c]	Location[d]	Quality Group Classification[e]	Quality Class[f]	Seismic Category[g]	Notes[h]
Diesel intake/exhaust air piping	P	3	DG	D	I	I	26
Diesel starting air	P	3	DG	D	I,II	I	26,27
Diesel jacket water cooling	P	3	DG	D	I	I	26
38. Auxiliary ac power system							
Essential components	P	2	W,R,DG	N/A	I	I	
Nonessential components	P	G	W,R,T,O	N/A	II	II	4
39. Auxiliary 125/250-V dc power system							
Batteries	P	2	W	N/A	I	I	
Battery Chargers	P	3	W	N/A	I	I	
Cables	P	2	W,R	N/A	I	I	
Modules	P	2	W,R	N/A	I	I	
40. 24-V dc power system							
Batteries	P	2	W	N/A	I	I	
Battery chargers	P	2	W	N/A	I	I	
Cables	P	2	W,R	N/A	I	I	
Modules	P	2	W,R	N/A	I	I	
41. 120-V critical power supply system							
Equipment	P	2	W,R	N/A	I	I	
42. Power conversion system (Figures 10.3-1 and 3.2-4)							
Main steam piping from outermost isolation valves up to turbine stop valves	P	2	R,T	B	I	I	28
Main steam branch piping to first valve capable of timely closure	P	2	T	B	I	I	28
Main steam piping downstream of MS-V-146 including turbine bypass piping, and steam piping down stream of first valve capable of timely closure	P	G	T	D	II	II	

Table 3.2-1

Equipment Classification (Continued)

Principal Component[a]	Scope of Supply[b]	Safety Class[c]	Location[d]	Quality Group Classification[e]	Quality Class[f]	Seismic Category[g]	Notes[h]
Turbine stop valves, turbine control valves, and turbine bypass valves	P	G	T	D	II	II	29,30
Main steam leads from turbine control valve to turbine casing	P	G	T	D	II	II	30
Feedwater and condensate system beyond outermost isolation valve	P	G	R,T	D	II	II	4
Turbine generator	P	G	T	D	II	II	
Condenser	P	G	T	D	II	II	
Air ejection equipment	P	G	T	D	II	II	
Feedwater treatment system	P	G	T	D	II	II	
Turbine bypass system beyond turbine bypass valve	P	G	T	D	II	II	
Turbine gland sealing system components	P	G	T	D	II	II	
Piping, valves, other	P	G	T	D	II	II	
Equipment, other	P	G	T	D	II	II	
43. Circulating water and cooling tower makeup water system(s) (Figure 10.4-4)							
Piping and valves	P	G	P	D	II	II	31
Pumps	P	G	P	D	II	II	
Cooling tower fans	P	G	P	D	II	II	
44. Main steam isolation valves leakage control system (DEACTIVATED) (Figure 3.2-5)							
Piping and valves within primary containment and out through the outermost isolation valves	*P*	*1*	*R,C*	*A*	*I*	*I*	
Piping and valves beyond the outermost isolation valves	*P*	*2*	*R*	*B*	*I*	*I*	
Blowers	*P*	*2*	*R*	*N/A*	*I*	*I*	
45. Containment vessel	P	2	R	B	I	I	

Table 3.2-1

Equipment Classification (Continued)

Principal Component[a]	Scope of Supply[b]	Safety Class[c]	Location[d]	Quality Group Classification[e]	Quality Class[f]	Seismic Category[g]	Notes[h]
46. Buildings							
Reactor building	N/A	2	R	N/A	I	I	
Turbine building	N/A	G	T	N/A	II	II	32
Radwaste control building	N/A	3/G	W	N/A	I,II	I/II	33
Diesel generator building	N/A	3	DG	N/A	I	I	
Spray ponds and standby service water pump house	N/A	3	P	N/A	I	I	
Service building	N/A	G	S	N/A	II	II	
Cooling towers	N/A	G	O	N/A	II	II	
Makeup water pump house	N/A	G	O	N/A	I	II	31
Circulation water pump house	N/A	G	O	N/A	II	II	
Air intake structures No. 1 and No. 2	N/A	3	O	N/A	I	I	
47 Containment/drywell atmosphere monitoring system	P	3	R	A	I	I	
48. Drywell insulation							
Insulation on piping which is within the drywell	P	G	R	N/A	I	I	
49. Instrumentation and control equipment							
Safety-related instrumentation and control systems	P	1	C,R,T,DG	A	I	I	34
50. Postaccident sampling system (Figure 3.2-6)							
Piping within outermost reactor coolant boundary isolation valves	P	1	C,R	A	I	I	
Piping within outermost containment isolation valves	P	2	C,R	B	I	I	
Piping within the outermost RHR system isolation valves	P	2	R	B	I	I	
Piping beyond the outermost reactor coolant boundary, containment, or RHR system isolation valves	P	G	R,W	D	II	II	
Sample station	GE	G	R,W	D	G	II	
All other	P	G	R,W	D	II	I	

Table 3.2-1

Equipment Classification (Continued)

Principal Component[a]	Scope of Supply[b]	Safety Class[c]	Location[d]	Quality Group Classification[e]	Quality Class[f]	Seismic Category[g]	Notes[h]
51. Hydrogen Water Chemistry System							
Hydrogen and air injection piping and valves near and inside TGB (Figure 10.4-9.1)	GE/P	G	O,T	D	II	II	
52. Hydrogen Storage and Supply Facility (HSSF) (Figures 10.4-9.2, 10.4-9.3)							
Tubing and valves	P	G	H	D	II	II	
Buried piping from HSSF to TGB	P	G	H,O	D	II	II	
Liquid Hydrogen Storage Vessel	P	G	H	D	II+	1M	35
Vessels, other	P	G	H	D	II	II	
53. Hardened Containment Vent (HCV)							
Piping and valves forming part of containment boundary from the containment penetration up to and including Rupture Discs HCV-RD-54 and HCV-RD-60	P	2	R	B	I	I	
Piping and valves forming part of secondary containment from but not including Rupture Discs HCV-RD-54 and HCV-RD-60 to the secondary containment penetrations including the PCIV pneumatic lines between the valves and secondary containment	P	2	R	D	I	I	
Piping and valves from the secondary containment penetration to the exhaust point	P	G	R	D	II+	I	

Table 3.2-1

Equipment Classification (Continued)

[a] A module is an assembly of interconnected components which constitute an identifiable device or piece of equipment. For example, electric modules include sensors, power supplies, and signal processors; and mechanical modules include turbines, strainers, and orifices.

[b] GE - General Electric; P - Plant Owner (Energy Northwest)

[c] 1, 2, 3, G - Safety classes defined in Section 3.2.3.

[d]

A - Auxiliary building
C - Part of or within primary containment
L - Offsite locale
R - Reactor building
S - Service building
T - Turbine building
M - Any other location
O - Outdoors onsite
P - Pump house
W - Radwaste and control building
DG - Diesel generator building
H - Hydrogen Storage and Supply Facility

[e] A, B, C, D - NRC quality groups defined in Regulatory Guide 1.26, Revision 3. The equipment is constructed in accordance with the codes listed in Table 3.2-2, as minimum requirements.

N/A - Quality Group classification not applicable to this equipment.

[f] Quality Classes defined in Section 3.2.4.

Table 3.2-1

Equipment Classification (Continued)

[g] I - constructed in accordance with the seismic requirements of Seismic Category I structures and equipment as described in Section 3.7.
II - constructed in accordance with the requirements of Seismic Category II structures and equipment as described in Section 3.7. The approaches outlined in the Uniform Building Code will be followed where applicable.

N/A - seismic requirements as described for Seismic Category I and II structures and equipment are not applicable to this structure or equipment.

1M - non-safety-related components required to be seismically supported/mounted. This was alternatively called Seismic II⊕ which is Seismic II piping supported on hangers designed to Seismic I loads.

[h] The notes clarify system/component boundaries, design requirements, and/or alternate quality classification applications.

Reactor pressure boundary components (RPBC) and their original applicable code cases are listed in the attachments to Table 3.2-1. Current practices regarding code cases that are adopted for use at CGS (and are approved by Regulatory Guides 1.147, 1.84, 1.85, or other approval authority) requires that they are specified in the component's design specification as required by ASME Section III, NA-3250.

Table 3.2-1

Equipment Classification (Continued)

NOTES

1. This piping has been upgraded from Safety Class 3 to Safety Class 2 and from Quality Group Classification C to Quality Group Classification B.

2. a. Lines 0.75-in. and smaller which are part of the RCPB are Quality Group B or higher and Seismic Category I.

   b. All instrument lines which are connected to the RCPB and are used to actuate and monitor safety systems are Quality Group B from the outer isolation valve or the process shutoff valve (root valve) to the bulkhead of the instrument rack, if rack mounted, or the sensing instrumentation, if locally mounted.

   c. All instrument lines which are connected to the RCPB and are not used to actuate and monitor safety systems are Quality Group D from the outer isolation valve or the process shutoff valve (root valve) to the sensing instrument

   d. All other instrument lines:

      1. Through the root valve are of the same classification or higher as the system to which they are attached;

      2. Beyond the root valve to the instrument rack bulkhead, if rack mounted, or to the sensing instrumentation, if locally mounted, if used to actuate a safety system, are of the same classification as the system to which they are attached;

      3. Beyond the root valve, if not used to actuate a safety system are Quality Group D.

      4. All sample lines from the outer isolation valve or the process root valve through the remainder of the sampling system are Quality Group D.

Table 3.2-1

Equipment Classification (Continued)

NOTES (Continued)

3. The control rod drive insert and withdraw lines from the drive flange up to and including the first valve on the hydraulic control unit (HCU) is in Safety Class 2.

4. Supports for Quality Class II (nonessential) piping systems, HVAC, cable trays, and system components in the reactor building, primary containment, the control building, diesel generator building, the standby service water (SW) pump houses, and the radwaste building corridor are designed and constructed to withstand an SSE per position C.2 of Regulatory Guide 1.29. These supports are constructed to Quality Class II requirements, as a minimum.

5. The HCU is a GE factory assembled engineered module of valves, tubing, piping, and stored water which controls a single control rod drive by the application of precisely timed sequences of pressure and flows to accomplish slow insertion or withdrawal of the control rods for power control and rapid insert ion for reactor scram.

   Although the HCU is field installed and connected to process piping, many of its internal parts differ markedly from process piping components because of the more complex functions they must provide. Thus, although the codes and standards invoked by Quality Groups A, B, C, D pressure integrity quality levels clearly apply to all levels to the interfaces between the HCU and the connecting conventional piping components (e.g., pipe nipples, fittings, simple hand valves, etc.), it is considered that they do not apply to the specialty parts (e.g., solenoid valves, pneumatic components, and instruments).

   The design and construction specifications for the HCU do invoke such codes and standards as can be reasonably applied to individual parts in developing required quality levels, but these codes and standards are supplemented with additional requirements for these parts and for the remaining parts and details. For example, (a) all welds are LP inspected, (b) all socket welds are inspected for gap between pipe and socket bottom, (c) all welding is performed by qualified welders, and (d) all work is done per written procedures. Quality Group D is generally applicable because the codes and standards invoked by that group contain clauses which permit the use of manufacturer's standards and proven design techniques which are not explicitly defined within the codes of Quality Groups A, B, or C. This is supplemented by the quality control techniques described above.

Table 3.2-1

Equipment Classification (Continued)

NOTES (Continued)

6. The standby liquid control (SLC) system is not a safety-related backup to a scram function (RPS/CRD). However, these components of the SLC system are designed to engineering standard greater than those normally applied to Safety Class 2 systems.

7. Only equipment associated with a safety action (e.g., isolation) need conform to a safety function.

8. These lines meet the requirements of Quality Group B except that hydrostatic testing of the containment spray piping is not required.

9. The RCIC turbine does not fall within the applicable design codes. To ensure that the turbine is fabricated to the standards commensurate with its safety and performance requirements, GE has established specific design requirements for this component which are as follows:

   a. All welding is qualified in accordance with Section IX, ASME Boiler and Pressure Vessel Code;

   b. All pressure containing castings and fabrications are hydrotested to 1.5 times design pressure;

   c. All high-pressure castings are radiographed according to:

      1. ASTM E-94
      2. E-142 maximum feasible volume
      3. E-71, 186 or 280 severity level 3;

   d. All-cast surfaces are magnetic particulate or liquid penetrant tested according to ASME, Section III, Paragraph NB-2575 or NB-2576;

Table 3.2-1

Equipment Classification (Continued)

NOTES (Continued)

e. Wheel and shaft forgings are ultrasonically tested according to ASTM-A-388;

f. Butt-welds are radiographed according to ASME Section III, IX-3300, and magnetic particle or liquid penetrant tested according to ASME Section III, IX-3500, or IX-3600;

g. Notification is made on major repairs and records maintained thereof;

h. Record system and traceability according to ASME Section III, NA-4900;

i. Control and identification according to ASME Section III, NA-4400;

j. Procedures conform to ASME Section III, NA-4400;

k. Inspection personnel are qualified according to ASME Section III, Appendix IX, paragraph IX-400.

10. The RCIC turbine exhaust line from the isolation valve to the suppression pool meets all the requirements of Quality Group B except that hydrostatic testing of this portion of piping is not required.

11. Although the refueling bellows are designed to withstand the SSE without rupture, they may be plastically deformed.

12. DELETED.

13. Equipment, piping, and valves that are part of the radwaste system but not used for processing radioactive fluids are designed to Quality Group D standards.

Table 3.2-1

Equipment Classification (Continued)

NOTES (Continued)

14. Equipment, piping, and valves that are part of the radwaste solids handling system are designed to Quality Group D standards.

15. Up to and including the last stop valve, this line meets requirements of Quality Group C.

16. The fuel pool cooling heat exchangers have been upgraded to 270 psig (shell side) and Seismic Category I through several modifications. These heat exchangers are Quality Class II (with the modifications installed as Quality Class I) and ASME Section III Class 3. See Note 13 in Figure 9.1-6.1.

17. Piping and valves of the cooling portion of the fuel pool cooling system have been upgraded to Seismic Category I and are ASME Section III Class 3, Code Group C (with exception of valves listed in Note 16 in Figure 9.1-6.1). See Note 13 in Figure 9.1-6.1 for Quality Classification.

18. The fuel pool cooling circulation pumps have been upgraded to Seismic Category I. Their respective motors have been upgraded to Quality Class I Seismic Category I. The fuel pool cooling pumps are ASME Section III Class 3. See Note 13 in Figure 9.1-6.1 for Quality Classification.

19. The fuel pool cooling system (see Section 9.1.3) normally receives makeup from the Seismic Category II condensate storage tank. Should this normal supply be unavailable, makeup is available from the Seismic Category I SW system. Likewise, the normal source of cooling water to the FPC heat exchangers is from the Seismic Category II RCC system. When this normal supply is unavailable, the Seismic Category I SW system provides the cooling water and makeup. In addition, by means of removable spool-pieces, the RHR system is also available as the supplementary source of cooling during cold shutdown under core offload conditions. The above complies with Regulatory Guides 1.26, Revision 3, and 1.29, Revision 3.

Table 3.2-1

Equipment Classification (Continued)

NOTES (Continued)

The cleanup portion is automatically isolated from the cooling portion of the system by Seismic Category I valves on low fuel pool level (see Section 9.1.3).

20. Piping and valves downstream of valves SGT-V-5A1, SGT-V-5A2, SGT-V-5B1, and SGT-V-5B2 meet the requirements of Quality Group B except that a pneumatic test is not performed.

21. Lavatory exhaust systems are designed to Quality Assurance Class G.

22. Part of the HVAC components are non-safety-related. Non-safety-related equipment and components required to be seismically supported/mounted according to Regulatory Guide 1.29 are designated Seismic Category 1M and Quality Assurance Class II+. Non-safety-related equipment and components not required to be seismically supported/mounted according to Regulatory Guide 1.29 are designated Seismic Category II and Quality Assurance Class II.

23. The condensate storage tanks are designed, fabricated, and tested to meet ASME Code, Section III, Subsection ND-3800. In addition, the specification for this tank requires 100% surface examination of the side wall to bottom joint, and 100% volumetric examination of the side-wall weld joints.

24. The high-pressure core spray (HPCS) suction piping from the condensate storage tank provides the initial source of makeup water to the HPCS system for safety injection. Consequently, this piping has been upgraded by full volumetric examination of every weld.

25. The auxiliary piping systems on the engines are built to the guidelines of ANSI B31.1.

26. These piping systems are liquid penetrant or magnetic particle examined to the acceptance standards of ASME Section III, Class 3, if they are over 4 in. IPS as required by the 1973 Winter Addenda except for the diesel cooling water piping that is on engine skid.

Table 3.2-1

Equipment Classification (Continued)

NOTES (Continued)

27. Piping upstream from the check valves at the inlet of the air receivers is Quality Class II, ANSI B31.1, Seismic Category I. All other piping is Quality Class 1.

28. The piping is supported to Seismic Category I requirements, but is not housed in a Seismic Category I structure. The power conversion system structures are constructed in accordance with applicable codes for steam power plants. The turbine building, interacting with main steam lines and branch lines, is designed as a modified Seismic Category II structure as described in Section 3.8.4.1.3.

29. All cast pressure retaining parts of a size and configuration for which volumetric examination methods are required are examined by radiographic methods by qualified personnel. Ultrasonic examination to equivalent standards may be used as an alternative to radiographic methods. Examination procedures and acceptance standards are at least equivalent to those specified as supplementary types of examination in ANSI B31.1.0 Code, Paragraph 136.4.3.

30. The following qualification is met with respect to the certification requirements:

    a. The manufacturer of the turbine stop valves, turbine governor valves, turbine bypass valves, and mainsteam leads from turbine control valve to turbine casting utilized quality control procedures, and

    b. A certification has been obtained from the manufacturer of these valves and steam leads that the quality control program so defined has been accomplished.

Table 3.2-1

Equipment Classification (Continued)

NOTES (Continued)

31. The makeup water pump house is designed to withstand the design-basis tornado. The design also considers the possible effects of tornado-generated missiles. The tower makeup water piping, valves, and cabling located underground are provided with adequate earth cover to be resistant to tornado-generated missiles or are protected by tornado-resistant structures. The circulating water system also supports the post-tornado operation of the standby service water system. In the event of the loss of the spray headers in the SW spray ponds, tornado-protected underground lines can provide a flow path to provide makeup water from TMU, and to return water to the CW basin. See FSAR Section 9.2.5.3 for additional discussion.

32. Portions of the turbine building that support or interact with main steam piping are designed to Seismic Category I.

33. Those portions of the radwaste and control building that house systems or components necessary for safe shutdown of the reactor are designed to Quality Class I and Seismic Category I requirements. Those portions of the radwaste building housing equipment containing significant quantities of radioactive material are designed to Seismic Category I requirements.

34. Safety-related instrument and control systems are identified in Table 7.1-1.

35. The HSSF liquid hydrogen storage tank, foundations, anchorage (i.e., anchor bolts, slide plates, and the baseplate welding) and the underlying soil are not safety-related, and are designated as Quality Class II+. However, these are designed for Seismic Category I loads and ground motion as defined by Regulatory Guide 1.60. In addition, they were designed to remain in place for both design basis tornado characteristics and maximum probable flood.

36. Piping located between secondary containment isolation valves EDR-V-394, EDR-V-395, FDR-V-219, FDR-V-220, FDR-V-221 and FDR-V-222 is classified as Seismic Category I, Quality Class II+ and Quality Group D.

37. Seismic Category I applies to the motor rotor, bearings and bearing load path parts. The motor is mounted Seismic Category IM.

38. Large bore piping is analyzed to Seismic Category I loading.

Table 3.2-1 Attachment 1

Nuclear Boiler System

Component	Code Case	Comments	Component	Code Case	Comments
PI(1)-ST-X70d			PI(1)-4S-X114		
PI(1)-4S-X71a			PI(1)-ST-X114		
PI(1)-ST-X71a			PI(1)-4S-X115		
PI(1)-4S-X71b			PI(1)-ST-X115		
PI(1)-ST-X71b			PI(1)-ST-(IR-64)-4		
PI(1)-4S-X72a			PI(1)-ST-(IR-64)-5		
PI(1)-ST-X72a			PI(1)-ST-MS-PT-2		
PI(1)-4S-X75c			RFW(1)-4A	1 thru 11, K,L,M,S,T	
PI(1)-ST-X75c			RFW(1)-4B	1 thru 11, K,L,M,S,T	
PI(1)-4S-X75d					
PI(1)-ST-X75d					
PI(1)-4S-X106					
PI(1)-ST-X106					
PI(1)-4S-X107					
PI(1)-ST-X107					
PI(1)-4S-X108					
PI(1)-ST-X108					
PI(1)-4S-X109					
PI(1)-ST-X109					
PI(1)-4S-X110					
PI(1)-ST-X110					
PI(1)-4S-X111					
PI(1)-ST-X111					
PI(1)-4S-X112					
PI(1)-ST-X112					
PI(1)-4S-X113					
PI(1)-ST-X113					

Table 3.2-1 Attachment 1

Nuclear Boiler System (Continued)

Component	Code Case	Comments	Component	Code Case	Comments
MS(9)-4	1, 4 thru 11 K,L,M,S,T		PI(1)-4S-X39a		
MS(18)-2-1	1, 4 thru 11 K,L,M,S,T		PI(1)-ST-X39a		
MS(18)-2-2	1 thru 11 K,L,M,S,T		PI(1)-4S-X39b		
MS(18)-2-3	1, 3 thru 11 K,L,M,S,T		PI(1)-ST-X39b		
MS(18)-2-4	1, 4 thru 11, K,L,M,S,T		PI(1)-4S-X42a		
MS(18)-2-5	1, 3 thru 11 K,L,M,S,T		PI(1)-ST-X42a		
MS(18)-2-6	1, 4 thru 11 K,L,M,S,T		PI(1)-4S-X42b		
MS(18)-2-7	1, 4 thru 11 K,L,M,S,T		PI(1)-ST-X42b		
MS(18)-2-8	1, 4 thru 11,K,L,M,S,T		PI(1)-4S-X42e		
MS(18)-2-9	1, 3 thru 11 K,L,M,S,T		PI(1)-ST-X42e		
MS(18)-2-10	1, 3 thru 11 K,L,M,S,T		PI(1)-4S-X61c		
MS(18)-2-11	1, 3 thru 11 K,L,M,S,T		PI(1)-ST-X61c		
MS(18)-2-12	1, 3 thru 11 K,L,M,S,T		PI(1)-4S-X62b		
MS(18)-2-13	1, 4 thru 11 K,L,M,S,T		PI(1)-ST-X62b		
MS(18)-2-14	1, 4 thru 11 K,L,M,S,T		PI(1)-4S-X69a		
MS(18)-2-15	1, 3 thru 11 K,L,M,S,T		PI(1)-ST-X69a		
MS(18)-2-16	1, 3 thru 11 K,L,M,S,T		PI(1)-4S-X69b		
MS(18)-2-17	1, 4 thru 11 K,L,M,S,T		PI(1)-ST-X69b		
MS(18)-2-18	1, 4 thru 11 K,L,M,S,T		PI(1)-4S-X69f		
B22-G001A	1 thru 3		PI(1)-ST-X69f		
B22-G001B	1 thru 3		PI(1)-4S-X70a		
B22-G001C	1 thru 3		PI(1)-ST-X70a		
B22-G001D	1 thru 3		PI(1)-4S-X70b		
PI(1)-4S-X38a			PI(1)-ST-X70b		
PI(1)-ST-X38a			PI(1)-4S-X70c		
PI(1)-4S-X38b			PI(1)-ST-X70c		
PI(1)-ST-X38b			PI(1)-4S-70d		

Table 3.2-1 Attachment 2

Reactor Recirculation System

Component	Code Case	Comments	Component	Code Case	Comments
PI(1)-4S-X40c			PI(1)-ST-X44Ah		
PI(1)-ST-X40c			PI(1)-4S-X44Aj		
PI(1)-4S-X40d			PI(1)-ST-X44Aj		
PI(1)-ST-X40d			PI(1)-4S-X44Ak		
PI(1)-4S-X40e			PI(1)-ST-X44Ak		
PI(1)-4S-X40f			PI(1)-4S-X44A1		
PI(1)-4S-X41c			PI(1)-ST-X44A1		
PI(1)-ST-X41c			PI(1)-4S-X44Am		
PI(1)-4S-X41d			PI(1)-ST-X44Am		
PI(1)-ST-X41d			PI(1)-4S-X44Ba		
PI(1)-4S-X41e			PI(1)-ST-X44Ba		
PI(1)-4S-X41f			PI(1)-4S-X44Bb		
PI(1)-4S-X44Aa			PI(1)-ST-X44Bb		
PI(1)-ST-X44Aa			PI(1)-4S-X44Bc		
PI(1)-4S-X44Ab			PI(1)-ST-X44Bc		
PI(1)-ST-X44Ab			PI(1)-4S-X44Bd		
PI(1)-4S-X44Ac			PI(1)-ST-X44Bd		
PI(1)-ST-X44Ac			PI(1)-4S-X44Be		
PI(1)-4S-X44Ad			PI(1)-ST-X44Be		
PI(1)-ST-X44Ad			PI(1)-4S-X44Bf		
PI(1)-4S-X44Ae			PI(1)-ST-X44Bf		
PI(1)-ST-X44Ae			PI(1)-4S-X44Bg		
PI(1)-4S-X44Af			PI(1)-ST-X44Bg		
PI(1)-ST-X44Af			PI(1)-4S-X44Bh		
PI(1)-ST-X44Ag			PI(1)-ST-X44Bh		
PI(1)-ST-X44Ag			PI(1)-4S-X44Bj		
PI(I)-4S-X44Ah			PI(1)-ST-X44Bj		

Table 3.2-1 Attachment 3

Control Rod Drive Hydraulic System

Component	Code Case	Comments	Component	Code Case	Comments
PI(1)-4S-X44Bk			PI(1)-ST-X75b		
PI(1)-ST-X44Bk			PI(1)-4S-X75e		
PI(1)-4S-X44Bl			PI(1)-ST-X75e		
PI(1)-ST-X44B1			PI(1)-4S-X75f		
PI(1)-4S-X44Bm			PI(1)-ST-X75f		
PI(1)-ST-X44Bm			PI(1)-4S-X78f		
PI(1)-4S-X61a			PI(1)-ST-X78f		
PI(1)-ST-X61a			PI(1)-1-RRC-SPV-85A		
PI(1)-4S-X61b			PI(1)-1-RRC-SPV-85B		
PI(1)-ST-X61b			RRC(5)-4S-A	1, 3 thru 11 K,L,M,S,T	
PI(1)-4S-X62c			RRC(5)-4S-B	1, 3 thru 11 K,L,M,	
PI(1)-ST-X62c			RRC(51)-1	1, 3 thru 11 K,L,M	
PI(1)-4S-X62d			RRC(51)-4	1, 3 thru 11 K,L,M,S,T	
PI(1)-ST-X62d			B35-G001A	1, 3	
PI(1)-4S-X69e			B35-G001B	1, 3	
PI(1)-ST-X69e					
PI(1)-4S-X70e					
PI(1)-4S-X70f					
PI(1)-4S-X74a					
PI(1)-ST-X74a					
PI(1)-4S-X74e					
PI(1)-ST-X74e					
PI(1)-4S-X74f					
PI(1)-ST-X74f					
PI(1)-4S-X75a					
PI(1)-ST-X75a					
PI(1)-4S-X75b					

Table 3.2-1 Attachment 3

Control Rod Drive Hydraulic System (Continued)

Component	Code Case	Comments	Component	Code Case	Comments
CRD-I/W	G				
CRD-SCRAM/INST	5, 13, G				
Hy(1)-65-A	1, 3 thru 11 K,L,M,S				
Hy(1)-65-B	4 thru 11 K,L,M,S,T				

Table 3.2-1 Attachment 4

Standby Liquid Control System

Component	Code Case	Comments	Component	Code Case	Comments
SLC(1)-1S	1, 3 thru 11 K,L,M				
SLC(2)-3S	1, 3 thru 11 K,L,M,S,T				
SLC(2)-4S	1, 3 thru 11 K,L,M,S,T				
PI(1)-ST-SLC-FT-1					
PI(1)-ST-SLC-PT-4					

Table 3.2-1 Attachment 5

Residual Heat Removal System

Component	Code Case	Comments	Component	Code Case	Comments
PI(1)-4S-X37e			PI(1)-ST-(H22-PO21)-A10		
PI(1)-ST-X37e			PI(1)-ST-(H22-PO21)-B1		
PI(1)-4S-X37f			PI(1)-ST-(H22-PO21)-B3		
PI(1)-ST-X37f			PI(1)-ST-(H22-PO21)-B4		
PI(1)-4S-X39d			PI(1)-ST-(H22-PO21)-B5		
PI(1)-ST-X39d			PI(1)-ST-(H22-PO21)-B6		
PI(1)-4S-X39e			PI(1)-ST-(IR-69)-2		
PI(1)-ST-X39e			PI(1)-ST-(IR-69)-3		
PI(1)-4S-X42d			PI(1)-ST-(IR-69)-7		
PI(1)-ST-X42d			PI(1)-ST-(IR-71)-1		
PI(1)-4S-X54Bf			PI(1)-ST-(IR-71)-2		
PI(1)-ST-X54Bf			PI(1)-ST-RHR-DPIS-9A		
PI(1)-4S-X61f			PI(1)-ST-RHR-DPIS-9B		
PI(1)-ST-X61f			PI(1)-ST-RHR-DPIS-9C		
PI(1)-1-X62f			PI(1)-ST-RHR-FT-1		
PI(1)-1-X69c			PI(1)-ST-RHR-FT-13		
PI(1)-4S-X74b			PI(1)-ST-RHR-LT-8A		
PI(1)-ST-X74b			PI(1)-ST-RHR-LT-8B		
PI(1)-ST-(H22-P018)-A5			PI(1)-ST-RHR-PI-2A		
PI(1)-ST-(H22-P018)-A6			PI(1)-ST-RHR-PI-2B		
PI(1)-ST-(H22-P018)-A7			PI(1)-ST-RHR-PI-2C		
PI(1)-ST-(H22-P018)-A9			PI(1)-ST-RHR-PS-18		
PI(1)-ST-(H22-P018)-A10			RHR(1)-2A	1, 3 thru 12 K,L,M,S,T	
PI(1)-ST-(H22-P021)-A5			RHR(1)-2B	1 thru 12 K,L,M,S,T	
PI(1)-ST-(H22-P021)-A6			RHR(1)-2C	1, 3 thru 11 K,L,M,S,T	
PI(1)-ST-(H22-P021)-A7			RHR(1)-4A	1, 3 thru 11 K,L,M,S,T	
PI(1)-ST-(H22-P021)-A9			RHR(1)-4B	1, 3 thru 11 K,L,M,S,T	

Table 3.2-1 Attachment 5

Residual Heat Removal System (Continued)

Component	Code Case	Comments	Component	Code Case	Comments
RHR(1)-4C	1, 3 thru 11 K,L,M,S,T				
RHR(3)-1C	1, 3 thru 12 K,L,M,S,T				
RHR(3)-2A	1, 3 thru 11 K,L,M,S,T				
RHR(3)-2B	1, 3 thru 11 K,L,M,S,T				
RHR(4)-1A	1, 3 thru 12 K,L,M,S,T				
RHR(4)-1B	1, 3 thru 12 K,L,M,S,T				
RHR(4)-1C	1, 3 thru 11 K,L,M,S,T				
RHR(9)-1	1, 3 thru 11 K,L,M,S,T				
RHR(1)-4B1	1, 4 thru 11 K,L,M,S,T				
RHR(1)-4A1	1, 3 thru 11 K,L,M,S,T				

Table 3.2-1 Attachment 6

Low-Pressure Core Spray

Component	Code Case	Comments	Component	Code Case	Comments
LPCS(1)-2	1 thru 11 K,L,M,P,S,T				
LPCS(1)-4	1, 4 thru 11 K,L,M,S,T				
LPCS(2)-1	1, 3 thru 11 K,L,M,S,T				
LPCS(3)-1	1, 3 thru 11 K,L,M,S,T				
PI(1)-4S-X78b					
PI(1)-ST-X78b					
PI(1)-1-X78d					
PI(1)-ST-X78d					
PI(1)-ST-(H22-POO1)-A2					
PI(1)-ST-(H22-POO1)-A3					
PI(1)-ST-(H22-POO1)-A4					
PI(1)-ST-(H22-POO1)-A5					
PI(1)-ST-(H22-POO1)-A6					
PI(1)-ST-(H22-POO1)-A7					
PI(1)-ST-LPCS-PI-1					

Table 3.2-1 Attachment 7

High-Pressure Core Spray

Component	Code Case	Comments	Component	Code Case	Comments
PI(1)-4S-X73a					
PI(1)-ST-X73a					
PI(1)-1-X78e					
PI(1)-ST-X78e					
PI(1)-ST-(H22-PO24)-A1					
PI(1)-ST-(H22-PO24)-A2					
PI(1)-ST-(H22-PO24)-A5					
PI(1)-ST-(H22-PO24)-A6					
PI(1)-ST-(H22-PO24)-A8					
PI(1)-ST-HPCS-PS-3					
HPCS(1)-4CL1	1, 3 thru 11 K,L,M,S,T				
HPCS(1)-4CL2	1, 3 thru 11 K,L,M,S,T				
HPCS(2)-1	1, 3 thru 11 K,L,M,S,T				
HPCS(3)-1	1, 4 thru 11 K,L,M,S,T				

Table 3.2-1 Attachment 8

Reactor Core Isolation Cooling System

Component	Code Case	Comments	Component	Code Case	Comments
RCIC(1)-4CL1	1, 4 thru 11 K,L,M,S,T		PI(1)-ST-(H22-PO17)-A5		
RCIC(1)-4CL2	1, 4 thru 12 K,L,M,S,T		PI(1)-ST-(H22-PO17)-A6		
RCIC(2)-1	1 thru 11 K,L,M,S,T		PI(1)-ST-(H22-PO17)-A7		
RCIC(12)-4CL1	1, 2, 4 thru 11 K,L,M,S,T		PI(1)-ST-(H22-PO17)-A8		
RCIC(12)-4CL2	1, 3 thru 11 K,L,M,S,T		PI(1)-ST-(H22-PO17)-B1		
RCIC(13)-4CL2	1 thru 11 K,L,M,S,T		PI(1)-ST-(H22-PO17)-B2		
RCIC(16)-1	1, 3 thru 11 K,L,M,S,T		PI(1)-ST-(H22-PO17)-B3		
RCIC(19)-1	1, 3 thru 11 K,L,M,S,T		PI(1)-ST-(H22-PO17)-B6		
RCIC(50)-1	1 thru 11 K,L,M,S,T		PI(1)-ST-(H22-PO17)-B7		
PI(1)-4S-X38c			PI(1)-ST-(H22-PO18)-A13		
PI(1)-ST-X38c			PI(1)-ST-(H22-PO21)-A13		
PI(1)-4S-X38d			PI(1)-ST-(H22-PO29)-A5		
PI(1)-ST-X38d			PI(1)-ST-(H22-PO29)-A6		
PI(1)-4S-X38e			PI(1)-ST-(IR-62)-2		
PI(1)-ST-X38e			PI(1)-ST-(IR-62)-4		
PI(1)-4S-X38f			PI(1)-ST-(IR-62)-5		
PI(1)-ST-X38f			PI(1)-ST-(IR-63)-15		
PI(1)-1-X54Aa			PI(1)-ST-(IR-63)-16		
PI(1)-ST-X54Aa			PI(1)-ST-(IR-67)-4		
PI(1)-4S-X71c			PI(1)-ST-RCIC-PCV-15		
PI(1)-ST-X71c			PI(1)-ST-RCIC-PS-1		
PI(1)-4S-X71d			PI(1)-ST-RCIC-PS-9A		
PI(1)-ST-X71d			PI(1)-ST-RCIC-PS-9B		
PI(1)-4S-X71e			PI(1)-ST-RCIC-PS-34		
PI(1)-ST-X71e					
PI(1)-4S-X71f					
PI(1)-ST-X71f					

Table 3.2-1 Attachment 9

Radwaste System

Component	Code Case	Comments	Component	Code Case	Comments
PI(1)-ST-(IR-61)-6					
PI(1)-ST-(IR-65)-3					
PI(1)-ST-(IR-61)-4					
PI(1)-ST-(IR-65)-4					
PI(1)-ST-(IR-62)-17					
PI(1)-ST-(IR-62)-18					
EDR(48)-1	1, 3 thru 11 K,L,M,S,T				
FDR(48)-1	1, 4 thru 11 K,L,M,S,T				
MWR(62)-15	1, 3				

Table 3.2-1 Attachment 10

Reactor Water Cleanup System

Component	Code Case	Comments	Component	Code Case	Comments
RWCU(1)-3A	1 thru 11 K,L,M,S,T				
RWCU(1)-3B	1, 3 thru 12 K,L,M,S,T				
RCWU(1)-4	1, 3 thru 11 K,L,M,S,T				
RWCU(3)-4	1 thru 11 K,L,M,S,T				
PI(1)-4S-X78c					
PI(1)-4S-X79a					
PI(1)-ST-X79a					
PI(1)-4S-X79b					
PI(1)-ST-X79b					
PI(1)-ST-(H22-P002)-A8					
PI(1)-ST-(H22-P002)-A9					
PI(1)-ST-(H22-P002)-A12					
PI(1)-ST-(H22-P002)-A13					

Table 3.2-1 Attachment 11

Standby Service Water System

Component	Code Case	Comments	Component	Code Case	Comments
PI(1)-ST-(IR-69)-1					
PI(1)-ST-(IR-69)-8					
PI(1)-ST-(IR-69)-10					
PI(1)-ST-(IR-62)-3					
PI(1)-ST-(IR-71)-4					
PI(1)-ST-(IR-71)-5					
PI(1)-ST-FPC-FT-16					
PI(1)-ST-FPC-FT-17					
PI(1)-ST-FPC-LIS-1A					
PI(1)-ST-FPC-LIS-1B					
PI(1)-ST-FPC-SPV-1					
FPC(1)-1	1 thru 11 K,L,M				
FPC(2)-1A	1, 3 thru 11 K,L,M				
FPC(2)-1B	1, 3 thru 11 K,L,M,S,T				
FPC(5)-2	1, 3 thru 11 K,L,M,S,T				
FPC(7)-1	1				
FPC(12)-1	1, 4 thru 11 K,L,M,N,S,T				

Table 3.2-1 Attachment 12

Standby Service Water System

Component	Code Case	Comments	Component	Code Case	Comments
SW(1)-2	1, 3 thru 11 K,L,M,S,T		PI(1)-ST-SW-PS-11B		
SW(1)-2-UG	1, 3 thru 11 E,K,L,M		PI(1)-ST-SW-PS-11A		
SW(2)-2	1, 3 thru 11 K,L,M,S,T		PI(1)-ST-(CMS-SR-14)-C2		
SW(2)-2-UG	1, 4 thru 11 E,K,L,M		PI(1)-ST-(IR-22)-1		
SW(21)-2	1 thru 11 K,L,M,S,T		PI(1)-ST-(IR-22)-2		
SW(21)-2-UG	1, 3 thru 11 E,K,L,M,S,T		PI(1)-ST-(IR-22)-3		
SW(22)-2	1, 3 thru 11 K,L,M,S,T		PI(1)-ST-(IR-69)-15		
SW(22)-2-UG	1, 3 thru 11 E,K,L,M,S,T		PI(1)-ST-(SW-SR-43)-A		
SW(70)-1-HPCS	1, 3 thru 11 K,L,M,S,T		PI(1)-ST-(SW-SR-43)-B		
SW(71)-1-HPCS	1, 3 thru 11 K,L,M		P1(1)-ST-SW-FIS-9		
PI(1)-ST-(CMS-SR-13)-C1			PI(1)-ST-SW-FIS-12		
PI(1)-ST-(CMS-SR-13)-C2			PI(1)-ST-SW-FIS-15		
PI(1)-ST-(H22-PO18)-A11					
PI(1)-ST-(H22-PO18)-A12					
PI(1)-ST-(H22-PO21)-A11					
PI(1)-ST-(H22-PO21)-A12					
PI(1)-ST-(IR-21)-1					
PI(1)-ST-(IR-21)-2					
PI(1)-ST-(IR-21)-3					
PI(1)-ST-(IR-24)-1					
PI(1)-ST-(IR-24)-2					
PI(1)-ST-(IR-71)-9					
PI(1)-ST-(SW-SR-42)-A					
PI(1)-ST-(SW-SR-42)-B					
PI(1)-ST-(CMS-SR-14)-C1					
PI(1)-ST-SW-FT-8A					
PI(1)-ST-SW-FT-8B					

Table 3.2-1 Attachment 13

Reactor Building Closed Cooling Water System

Component	Code Case	Comments	Component	Code Case	Comments
RCC(3)-1	1 thru 11 K,L,M,S,T				
RCC(4)-2	3 thru 11 K,L,M,S,T				
RCC(5)-2	1, 3 thru 11 K,L,M,S,T				
RCC(36)-1	1 thru 11 K,L,M,S,T				

Table 3.2-1 Attachment 14

Primary Containment Cooling System

Component	Code Case	Comments	Component	Code Case	Comments
CSP(1)-1B	1, 3 thru 11 K,L,M,S,T		PI(1)-4S-X73e		
CEP(1)-1A	1, 2, 4 thru 11 K,L,M,S,T		PI(1)-ST-X73e		
CEP(1)-1B	1 thru 11 K,L,M,S,T		PI(1)-4S-X82b		
PI(1)-4S-X29c			PI(1)-ST-X82b		
PI(1)-4S-X29d			PI(1)-4S-X82c		
PI(1)-ST-X29d			PI(1)-ST-X82c		
PI(1)-4S-X29e			PI(1)-4S-X84a		
PI(1)-ST-X29e			PI(1)-ST-X84a		
PI(1)-4S-X30a			PI(1)-4S-X84b		
PI(1)-ST-X30a			PI(1)-ST-X84b		
PI(1)-4S-X30d			PI(1)-4S-X85c		
PI(1)-ST-X30d			PI(1)-ST-X85c		
PI(1)-4S-X72b			PI(1)-4S-X85d		
PI(1)-ST-X72b			PI(1)-ST-X85d		
PI(1)-4S-X72c			PI(1)-4S-X85e		
PI(1)-ST-X72c			PI(1)-ST-X85e		
PI(1)-4S-X72d			PI(1)-4S-X86a		
PI(1)-ST-X72d			PI(1)-ST-X86a		
PI(1)-4S-X72e			PI(1)-4S-X86b		
PI(1)-ST-X72e			PI(1)-ST-X86b		
PI(1)-4S-X72f			PI(1)-4S-X87a		
PI(1)-ST-X72f			PI(1)-ST-X87a		
PI(1)-4S-X73c			PI(1)-4S-X87b		
PI(1)-ST-X73c			PI(1)-ST-X87b		
PI(1)-4S-X73d			PI(1)-ST-(IR-62)-14		
PI(1)-ST-X73d			PI(1)-ST-(IR-62)-15		
			PI(1)-ST-(IR-62)-16		

Table 3.2-1 Attachment 14

Primary Containment Cooling System (Continued)

Component	Code Case	Comments	Component	Code Case	Comments
PI(1)-ST-(IR-62)-19					
PI(1)-ST-(IR-63)-1A					
PI(1)-ST-(IR-63)-1B					
PI(1)-ST-(IR-63)-2					
PI(1)-ST-(IR-63)-3					
PI(1)-ST-(IR-63)-4					
PI(1)-ST-(IR-63)-10					
PI(1)-ST-(IR-64)-1A					
PI(1)-ST-(IR-64)-1B					
PI(1)-ST-(IR-64)-2					
PI(1)-ST-(IR-64)-38					
PI(1)-ST-(IR-64)-7					
PI(1)-ST-(IR-64)-9					
PI(1)-ST-(IR-65)-1					
PI(1)-ST-(IR-65)-2					
PI(1)-ST-(IR-65)-7					
PI(1)-ST-(IR-65)-8					
PI(1)-ST-(IR-65)-9					
PI(1)-ST-(IR-66)-3					
PI(1)-ST-(IR-67)-2					
PI(1)-ST-(IR-67)-3					
PI(1)-ST-(IR-68)-1					
PI(1)-ST-(IR-68)-2					
PI(1)-ST-(CMS-SR-13)-DT					
PI(1)-ST-(CMS-SR-14)-DT					

Table 3.2-1 Attachment 15

Standby Gas Treatment System

Component	Code Case	Comments	Component	Code Case	Comments
PI(1)-ST-SGT-FT-1A1					
PI(1)-ST-SGT-FT-1A2					
PI(1)-ST-SGT-FT-1B1					
PI(1)-ST-SGT-FT-1B2					

Table 3.2-1 Attachment 16

Primary Containment Atmospheric Control System (DEACTIVATED)

Component	Code Case	Comments	Component	Code Case	Comments
PI(1)-ST-CAC-FT-1A					
PI(1)-ST-CAC-FT-1B					
PI(1)-ST-CAC-FT-2A					
PI(1)-ST-CAC-FT-2B					
PI(1)-ST-CAC-FT-3A					
PI(1)-ST-CAC-FT-3B					
PI(1)-ST-CAC-FT-4A					
PI(1)-ST-CAC-FT-4B					
CAC(1)-1	1, 3 thru 11 K,L,M,S,T				
CAC(2)-1	1, 3 thru 11 K,L,M,S,T				
CAC(11)-1	1 thru 11 K,L,M,S,T				
CAC(12)-1	1, 2, 3, 7				
CAC(21)-1A	1				
CAC(21)-1B	4 thru 11 K,L,M				

Table 3.2-1 Attachment 17

Other Heating, Ventilating, Air-Conditioning

Component	Code Case	Comments	Component	Code Case	Comments
PI(1)-ST-(IR-67)-10					
PI(1)-ST-(IR-67)-13					
PI(1)-ST-(IR-68)-15					
PI(1)-ST-(IR-69)-16					
PI(1)-ST-(IR-69)-17					
PI(1)-ST-(IR-71)-12					
PI(1)-ST-(IR-71)-13					

Table 3.2-1 Attachment 18

Condensate Storage and Transfer

Component	Code Case	Comments	Component	Code Case	Comments
COND(98)-1	1, 4 thru 11 K,L,M,N				

Table 3.2-1 Attachment 19

Instrument and Service Air

Component	Code Case	Comments	Component	Code Case	Comments
CAS(5)-1	1, 3 thru 11 K,L,M				
SA(1)-1	1, 4 thru 11 K,L,M,S,T				

Table 3.2-1 Attachment 20

Containment Instrument Air

Component	Code Case	Comments	Component	Code Case	Comments
CIA(3)-2	1, 3 thru 11 K,L,M				
CIA(5)-1A	1, 3 thru 11 K,L,M				
CIA(5)-1B	1 thru 11 K,L,M				
CIA(5)-2A	1, 3 thru 11 K,L,M				
CIA(5)-2B	1, 3 thru 11 K,L,M				
PI(1)-1-X56					
PI(1)-ST-(IR-67)-8					
PI(1)-ST-(IR-67)-9					
PI(1)-ST-(IR-68)-8					
PI(1)-ST-(IR-68)-9					
PI(1)-ST-(IR-68)-10					
PI(1)-ST-(IR-71)-17					
PI(1)-ST-(IR-71)-18					
PI(1)-ST-(IR-72)-1					
PI(1)-ST-(IR-74)-4					
PI(1)-ST-CIA-PIS-5					
PI(1)-ST-CIA-PIS-6					
PI(1)-ST-CIA-PIS-7					
PI(1)-ST-CIA-PIS-8					

Table 3.2-1 Attachment 21

Diesel Generator System

Component	Code Case	Comments	Component	Code Case	Comments
DO(1)-1A	1, 3 thru 11 K,L,M				
DO(1)-1B	1, 4 thru 11 K,L,M				
DO(1)-1-HPCS	1, 3 thru 11 J,K,L,M				
DO(9)-1A	1				
DO(9)-1B	1				
DO(9)-1-HPCS	1				
PI(1)-ST-DO-LS-11A					
PI(1)-ST-DO-LS-11B					
PI(1)-ST-DO-LS-13					

Table 3.2-1 Attachment 22

Power Conversion System

Component	Code Case	Comments	Component	Code Case	Comments
PI(1)-ST-(IR-81)-1					
PI(1)-ST-(IR-81)-3					
PI(1)-ST-(IR-82)-1					
PI(1)-ST-(IR-82)-3					
PI(1)-ST-(IR-83)-1					
PI(1)-ST-(IR-83)-3					
PI(1)-ST-(IR-84)-1					
PI(1)-ST-(IR-84)-3					
PI(1)-ST-MS-PTD-1A					
PI(1)-ST-MS-PTD-1B					
PI(1)-ST-MS-PT-54A					
PI(1)-ST-MS-PT-54B					
PI(1)-ST-MS-PS-56A					
PI(1)-ST-MS-PS-56B					
PI(1)-ST-MS-PS-56C					
PI(1)-ST-MS-PS-56D					
MS(1)-4A	1, 3 thru 12 K,L,M,S,T				
MS(1)-4B	1, 3 thru 11 K,L,M				
MS(1)-4C	1, 3 thru 12 K,L,M,S,T				
MS(1)-4D	1, 3 thru 12 K,L,M,S,T				

Table 3.2-1 Attachment 23

Main Steam Isolation Valves Leakage Control System (DEACTIVATED)

Component	Code Case	Comments	Component	Code Case	Comments
MSLC(2)-1	1 thru 11 K,L,M,S,T				
MSLC(4)-1	1, 3 thru 11 K,L,M				
PI(1)-ST-(IR-21)-7					
PI(1)-ST-(IR-21)-9					

Table 3.2-1 Attachment 24

Containment Vessel

Component	Code Case	Comments	Component	Code Case	Comments
Containment Vessel	F				
Containment System	2, 14, H	Pen. Assem. & Stiffener			

Table 3.2-1 Attachment 25

Postaccident Sampling System

Component	Code Case	Comments	Component	Code Case	Comments
PI(1)-4S-X73f					
PI(1)-4S-X77Ac					
PI(1)-4S-X77Ad					
PI(1)-4S-X80b					
PI(1)-4S-X82d					
PI(1)-4S-X82f					
PI(1)-4S-X83a					
PI(1)-4S-X83f					
PI(1)-4S-X84e					
PI(1)-4S-X84f					
PI(1)-4S-X88					

Table 3.2-1 Attachment 26

Key to Code Cases

The Following Code Cases Were Used as Noted on the Attachments	
Regulatory Guide 1.85	Regulatory Guide 1.84
1. N-242-1	A. N-154
2. 1567	B. N-122
3. 1713	C. N-318
4. 1644 thru 1644-6	D. N-316
5. N-71-7 (1644-7)	E. N-328
6. N-71-8 (1644-8)	F. N-362
7. N-71-9 (1644-9)	G. 1606-1
8. N-249	H. N-58 (1614)
9. N-249-1	J. N-192
10. 1728	K. 1718
11. N-225	L. N-111 (1729)
12. N-224-1	M. N-247
13. 1571	N. N-240
14. N-274	P. N-272
	R. N-252
	S. 1683-1
	T. N-175 (1818)
	U. N-411-1

Table 3.2-2

Code Group Designations - Industry Codes and Standards
for Mechanical Components[a,b]

Quality Group Classification	ASME Section III Code Classes	ASME Section III Code Applicable Subsection				
		Pressure Vessels and Heat Exchangers	Pumps, Valves, and Piping	Metal Containment Components	Storage Tanks 0-15	Storage Tanks Atmospheric
A	1	NA and NB TEMA C	NA and NB[c]	-	-	-
B	2 or MC	NA and NC TEMA C	NA and NC[c]	- NA and NE	NA and NC API-620[d]	NA and NC or D100, B96.1 or API-620[e]
C	3	NA and ND TEMA C	NA and ND[c]	- -	NA and ND or API-620[f]	NA and ND or D100, B96.1 or API-650[f]
D		ASME Section VIII Division 1 TEMA C	Piping and valves B31.1[g] Pumps[h]	-	API-620 or equivalent[i]	API-650 AWWA-D100 ANSI B96.1 or equivalent[i]

[a] With options and additions as necessary for service conditions and environmental requirements.

Table 3.2-2

Code Group Designations - Industry Codes and Standards
for Mechanical Components[a,b] (Continued)

[b] Components of the reactor coolant pressure boundary meet the requirements of 10 CFR 50, Section 50.55a, "Codes and Standards," except as shown in Table 5.2-1 and discussed in Section 5.2.1.1. All components satisfy codes and addenda in effect at the time of component order or later.

[c] For pumps classified A, B, or C; applicable subsections NB, NC, or ND; respectively, in ASME Code Section III is used as a guide in calculating the thickness of pressure-retaining portions of the pump and in sizing cover bolting.

[d] 100% volumetric examination of the sidewall and roof weld joints for plates over 3/16 in. thick and 100% surface examination of weld joints for plates 3/16 in. thick or less of the sidewall to bottom and sidewall to roof joints. These examination requirements are performed in accordance with the rules of ASME Section III, Class 2.

[e] 100% volumetric examination of the sidewall weld joints for plates over 3/16 in. thick and 100% surface examination sidewall to bottom joints. These examination requirements are performed in accordance with the rules of ASME Code Section III, Class 2.

[f] Nondestructive tests examination requirements per ASME Code, Section VIII, Division 1.

[g] Welds not totally conforming to B31.1 are evaluated and dispositioned on a case-by-case basis considering (a) the function of the systems, (b) the risk of failure, and (c) the consequences of failure for safety and plant availability.

[h] For pumps classified Group D, and operating above 150 psig and 212°F Section VIII, Division 1 is used as a guide in calculating the wall thickness for pressure-retaining parts and in sizing the cover bolting.

[i] Tanks are designed to meet the intent of API, AWWA, and/or ANSI 96.1 standards as applicable.

Table 3.2-3

Summary of Safety Class Design Requirements (Minimum)

Design Requirements	Safety Class			
	1	2	3	G
Quality group classification[a]	A	B	C	D
Quality class[b]	I	I, II+	I, II+	II, G
Seismic category[c]	I	I, 1M	I, 1M	II

[a] The equipment is constructed in accordance with the indicated code group listed in Table 3.2-1 and defined in Table 3.2-2.

[b] I (1 in MEL) - the equipment is constructed in accordance with the quality assurance requirements of 10 CFR 50, Appendix B, and Nuclear Energy Division Boiling Water Reactor Quality System Summary.

II+ (A in MEL) - Non-safety-related equipment for which Columbia Generating Station has made specified commitments to the NRC or others relating to the quality. Some 10 CFR 50, Appendix B, criteria are applied.

II (2 in MEL), G - The equipment is constructed in accordance with the quality assurance requirements as specified in contract documents as described in Section 3.2.3.

[c] I - the equipment of these safety classes is constructed in accordance with the seismic requirements for the safe shutdown earthquake as described in Section 3.7.

1M - The equipment does not perform a safety-related function but must be seismically supported/mounted per Regulatory Guide 1.29.

II - The seismic requirements for the safe shutdown earthquake are not applicable to the equipment of this classification. The approaches outlined in the Uniform Building Code are followed where applicable.

Deleted

3.3 WIND AND TORNADO LOADINGS

3.3.1 WIND LOADINGS

3.3.1.1 Design Wind Velocity

All Seismic Category I structures are designed to withstand a basic wind velocity (fastest mile), including gusts, of 100 mph at an elevation of 30 ft above the site grade. This wind velocity exceeds the basic wind velocity having a statistically derived probable period of recurrence of 100 years in this geographical area, as specified in the American Society of Civil Engineers Task Committee Report (Reference 3.3-1).

The Hanford region experiences high wind speeds due to squall lines, frontal passages, strong pressure gradients, and thunderstorms. The Hanford Reservation has experienced only one recorded tornado (June 1948) and has not been known to be affected by typhoons. No complete statistics are readily available which present frequency of occurrence of high winds produced or accompanied by a particular meteorological event. However, the highest winds produced by any cause are tabulated for the Hanford Meteorological Station (HMS) in Tables 2.3-5 and 2.3-6. Figure 2.3-4 indicates the return probability of any peak wind gust again due to any cause. The 100-mph design wind speed is conservative for the CGS site for the following reasons:

a. Peak wind gusts measured at the 50-ft HMS tower level, as reported in Tables 2.3-5 and 2.3-6, have never exceeded 80 mph, and

b. The statistically derived 100-year return period peak gust (Figure 2.3-4) at an elevation of 50 ft is 86 mph based on HMS records.

Recurrence intervals, data sources, and the history of occurrence of high winds, hurricanes, and tornadoes in the vicinity of the site are discussed in the CGS Environmental Report.

3.3.1.2 Determination of Applied Forces

The basic wind velocity of 100 mph is applied in accordance with Table 1(a) of Reference 3.3-1, including the variation in wind velocity with height and drag coefficients. Considering a gust factor of 1.0 and drag coefficient of C_D and V as the specific wind velocity at a particular height above grade given in Table 1(a) of Reference 3.3-1, the total combined average wind pressure p is given by

$$p = C_D \times 0.002558\ V^2$$

For example, at a height of 30 ft with V = 100 mph, C_D = 1.3, p = 33 psf

The above chosen gust factor is adequate for the CGS site for the following reasons. In Reference 3.3-1, the wind gust factor is defined as gust velocity divided by the velocity of the fastest mile of wind. Whereas the gust factor can not be less than 1.0, it is implied in Section 3.3.1.1 that the factor is unity since the 100-mph fastest mile wind accounts for wind gusts. A factor greater than 1.0 is not warranted at CGS since the statistically derived peak wind gust considered is less than the assumed site basic wind velocity. Additional considerations regarding gust factors and fastest mile velocities are presented in Section 2.3.1.2.1.4.

The following wind velocities are used in the design of structures at various elevations:

Height Above Grade (ft)	Wind Speed, V (mph)*
Less than 50	100
50 to 149	120
150 to 400	140

The wind pressures are applied as static forces. The translation of wind velocities into applied static forces, the wind force distribution, and the drag coefficients are in accordance with published values such as Reference 3.3-1. *The italicized information is historical and was provided to support the application for an operating license. The magnitude and distribution of the applied static forces originally calculated for structures are as follows:*

Height Above Grade	*Windward Side 0.8q (psf)*	*Leeward Side 0.5q (psf)*
Less than 50 ft	*20*	*13*
50 to 150 ft	*30*	*18*
150 to 400 ft	*0*	*25*

The term q, as described in Reference 3.3-1, is designated as the dynamic pressure of a free wind stream at a point on the surface of a structure immersed in the wind stream and when multiplied by the pressure coefficient, Cp, characteristic of the building types defined in Reference 3.3-1, gives the pressure on the structure's surfaces.

The original reactor building membrane roofing system has been replaced with a modern elastic sheet membrane system in accordance with the Factory Mutual system for Class I Fire and I-90 windstorm rating. Local wind uplift forces at the roof perimeter and corners would result in local failure of the existing controlled release fasteners during a gale or squall windstorm.

* *Table 1(a), Reference 3.1-1.*

3.3.2 TORNADO LOADINGS

3.3.2.1 Applicable Design Parameters

The original tornado design criteria provided for wind speeds of 300 mph rotational and 60 mph translational velocity, with a pressure drop of 3 psi to occur in 3 sec as discussed in Section 2.3.1.2.1.3, Tornados. The tornado design criteria were updated in January 1996 based on the design basis tornado characteristics in NUREG-1503 (Reference 3.3-2), which were found acceptable by the NRC (References 3.3-3 and 3.3-4).

Since January 1996, the updated design basis tornado is one having a maximum horizontal component of tangential (or peripheral rotational) wind velocity of 160 mph and a constant translational velocity of 40 mph. The resultant wind velocity (the sum of the maximum horizontal component of tangential velocity and the translational velocity) is 200 mph. The atmospheric pressure at the center of the tornado is 0.9 psi below ambient. The 0.9 psi external pressure drop is assumed to occur at a rate of 0.3 psi/sec. The nonventing structures are designed for the worst combination of wind velocity and associated atmospheric pressure drop in accordance with the load combinations contained in Section 3.3.2.2. The venting structures are designed for the worst combination of wind velocity and associated difference of the pressure within and the atmospheric pressure outside. The effects of a design basis tornado are considered in combination with other loads, including tornado-generated missiles, in Section 3.5.

3.3.2.2 Determination of Forces on Structures

Design static pressures, drag coefficients, and wind pressures are selected in accordance with published values such as Reference 3.3-1. The provisions for gust factors and variation of wind velocity, noted therein, are not applied for the following reasons.

The wind velocity may vary with the height of the structures but, for conservatism, the wind force due to tornado loadings is applied as a uniform static load invariant with the height above grade.

The total wind velocity occurs only in a localized area but is used in the design over the full height of the projected area of the structure. The total wind velocity is in effect the gust wind velocity, since by definition a tornadic gust wind velocity is a high localized wind velocity of very short duration. Therefore, no additional gust factor is applied.

The procedure used to transform the design-basis tornado wind velocity into an effective pressure applied to exposed surfaces of structures is described in Reference 3.3-1.

The following is an example of how Reference 3.3-1 was applied in the original calculations:

The same procedure as that used to transform the basic design-basis wind velocity in Section 3.3.1.2 is used with the exception that the velocity and velocity pressure are assumed not to vary with height.

The equivalent uniform tornado wind velocity used on the structure due to a tangential component of 300 mph and a transitional component of 60 mph is 360 mph. The pressure loads are calculated on the basis of a uniform 360 mph wind velocity.

a. The dynamic pressure on the structure is:

$q = 0.002558 \times (360)^2 = 331.5$ psf

b. The applied static pressures are:

1. Windward pressure on walls:

$p = 0.8 \times 331.5 = 265$ psf

2. Leeward suction on walls:

$p = 0.5 \times 331.5 = 166$ psf

3. Total design pressure on the structure is the sum of 265 psf and 166 psf, or 431 psf.

The differential pressure loading is calculated using the following pressure-time function: The differential pressure is assumed to vary from zero to 0.9 psi at a rate of 0.3 psi/sec and then return to zero at 0.3 psi/sec.

The procedure used for transforming the tornado-generated missile loadings into effective static loads is described in Section 3.5.3.

Mathematical models for the design-basis tornado take into consideration the phase relationship between the wind load and the differential pressure effects.

The tornado load, W′, in the load combinations in Tables 3.8-9 and 3.8-10 constitutes the combined effect of the three separate loads a, b, and c generated by the design basis tornado. The three loads are combined in the following manner to obtain the combined effect:

a. $W' = W_w$

b. $W' = W_p$

c. $W' = W_m$

d. $W' = W_w + 0.5W_p$

e. $W' = W_w + W_m$

f. $W' = W_w + 0.5W_p + W_m$

where:

W' = Total tornado load

W_w = Tornado wind load

W_p = Tornado differential pressure load

W_m = Tornado-generated missile load

3.3.2.3 Additional Design Features

Except for the steel superstructure atop the refueling floor, the reactor building remains sealed through the tornado event and a differential pressure of 0.9 psi across the exterior and interior is bounded by the design. All other Seismic Category I structures are provided with adequate openings to relieve a differential pressure of 0.9 psi in 3 sec or are designed to withstand an external pressure drop of 0.9 psi.

The structural steel frame superstructure atop the refueling floor of the reactor building is designed to withstand the design basis tornado. However, all the siding and roof decking enclosing the steel superstructure is designed for a maximum differential pressure of approximately 0.5 psi. The siding and girts are designed to blow off the steel frame when a differential pressure of approximately 0.5 psi is exceeded. The roof decking and roof purlins are designed to blow off the steel frame when a differential pressure of approximately 0.5 psi is exceeded. This value considers the dead weight loading from the roof membrane, roofing insulation, roof decking, and roof purlins. This is ensured by the use of controlled release type fasteners connecting the girts to the columns and roof purlins to the roof trusses. The release of the girts, siding, roof purlins, and roof decking from the structural steel frame will not affect the ability to shut down the reactor, the integrity of the primary containment or other Seismic Category I structures, or the capability of the essential heat removal systems to perform their intended design functions.

The design of the reactor building crane and its support system considers tornado effects in addition to normal loads to eliminate the possibility of generating internal missiles which may endanger the primary and secondary containment structures. The trolley is provided with

latches to engage tornado racks attached to the bridge girder to prevent horizontal movement of the trolley due to tornado loadings. The bridge trucks are provided with latches to engage tornado racks attached to the crane runway girders to prevent horizontal movement of the bridge due to tornado loadings. See Figure 3.8-44.

Based on the General Electric publication, (Reference 3.3-5), there is no credible mechanism by which a significant amount of water could be sucked from the fuel pool by a tornado.

The design of hardened containment vent system considers tornado effects in addition to normal loads to eliminate the possibility of creating a tornado generated missile.

The design considers the possible effects of tornado-generated missiles discussed in Section 3.5. Primary containment and components, equipment, and systems essential to a safe shutdown are protected from tornado-generated missiles by enclosing structures.

The diesel generator building and the radwaste and control building are designed to withstand the effects of tornado-generated missiles that might be released, such as girts and roof purlins. The results of analyses determining the effects of missiles are discussed in Section 3.5.

Piping and cabling required for safe shutdown and which penetrate exterior walls of the tornado-resistant structures are located below grade or are protected, as in the case of the standby service water (SW) piping at the service water pump houses, by tornado-resistant structures. Piping and cabling required for safe shutdown, which is provided with less than adequate earth cover for tornado protection, is protected with a tornado-resistant concrete slab or other structure. For information concerning protection provided for the SW system see Section 9.2.5.

3.3.2.4 Effect of Failure of Structures or Components Not Designed for Tornado Loads

The two reinforced-concrete spray pond structures have the capability to tolerate tornado generated missiles. Each pond is made up of four perimetral walls, 1 ft 3 in. at the top and 2 ft 0 in. at the bottom, and a floor slab of 7-in. thickness placed on top of a 2-in.-unreinforced-concrete subgrade leveling slab, as described in Section 3.8.4.1.5. Finish grade around the perimetral walls of the spray ponds is 1 ft 0 in. below the top of the walls, and the normal pond water level is at 6 in. below the top of the walls. The walls and slab are bounded by Quality Class I high relative density backfill. On this basis, missile protection is provided for the pond structures. A direct hit by a tornado-generated design basis missile resulting in localized floor and wall penetration is unlikely because of the protection provided by the backfill and the water in the pond.

Damage to the spray pond concrete structure due to tornado-generated missiles would be localized cracking in the area of impact. The structure will remain intact and any leakage will be made up by the cooling tower makeup system which pumps water directly from the river.

The makeup water pump house is a non-Seismic Category I structure impervious to tornado damage. The pump house and structures associated with the cooling tower makeup system, such as valve boxes, are designed to withstand the design basis tornado, including tornado-generated missiles. Piping, valves, and electrical equipment are protected in a similar way. Exterior wall and roof penetrations are designed and anchored to withstand the design basis tornado and the effects of tornado-generated missiles. Tornado-generated missiles are discussed in Section 3.5. Section 9.2.5.3 provides a discussion on the makeup water system and ultimate heat sink interaction if tornado damage to the spray headers require a feed-and-bleed mode of operation.

The availability of essential electrical power to the makeup water pump house systems is ensured. The electrical lines are underground with sufficient earth cover to resist tornado-generated missiles.

The electrical lines are installed in such manner as to provide two redundant electrical systems from the power source to the makeup water pump house. The two electrical systems are physically separated to provide adequate missile protection of one system from the other. At one end of each system, redundant power source transformers, associated switchgear, and cabling are provided on the ground floor of the turbine building where, for the trajectories required to cause damage to this equipment, they are protected against missile impact and spalling by the exterior walls of the turbine building and the floor slabs overhead. The terminal ends and transformers at the makeup water pump house are enclosed within the tornado-resistant pump house. Manholes within each system are also designed to withstand tornado-generated missiles.

The spray pond piping and supports are designed to withstand the effects of the design basis tornado. The piping system cannot be protected from the impact of tornado-generated missiles. In the event of missile damage to one of the pond spray headers, the alternate spray system which is 100% redundant is placed in operation. (In the event that both spray systems are rendered inoperative, the cooling tower makeup water system is placed into operation to provide continuous water supply to the spray ponds using Columbia River water which based on historical data has not exceeded 70°F.) The cooling tower makeup water system is provided with sufficient protection to prevent its loss of function in the event of a design-basis tornado passing over the project site. Since the makeup water flow rate exceeds that of the SW systems, and since the makeup water temperature is lower than the SW system design temperature of 85°F, the continuous availability of cooling water is ensured. Procedures for alternate spray pond use is described in Section 9.2.5.

Failure of nontornado-resistant cooling towers due to tornado loads does not endanger Seismic Category I structures since the plant arrangement provides sufficient distance between the cooling towers and Seismic Category I structures.

The liquid nitrogen storage tank located at the corner of the diesel generator building will not fail due to tornado wind loads. However, if the design-basis tornado missile were to strike the tank straight on near the top of the tank, it could be toppled. Toppling of the liquid nitrogen storage tank due to the impact of a tornado missile can cause the entire contents of the tank to be rapidly emptied in the vicinity of the inerting system skid. There is no safety-related equipment in the vicinity of the tank that would be affected by the cryogenic temperatures associated with liquid nitrogen. In addition, due to the turbulent mixing produced in close proximity to a tornado, no oxygen deficiency condition could be sustained outdoors at the diesel generator intake structures.

Failure of nontornado-resistant structures and components will not affect the ability to shut down the reactor, the integrity of the primary containment or other Seismic Category I structures, the capability of the essential heat removal systems to perform their intended design functions, nor result in the release of radioactivity.

3.3.2.5 Conformance with Regulatory Guide 1.76, Revision 0

The discussion of conformance with Regulatory Guide 1.76, Revision 0, is in Section 1.8.3.

3.3.3 REFERENCES

3.3-1 Task Committee Report, Wind Forces on Structures, Transactions of the American Society of Civil Engineers, Paper No. 3269, Vol. 126, Part II, 1961.

3.3-2 Nuclear Regulatory Commission, Final Safety Evaluation Report Related to the Certification of the Advanced Boiling Water Reactor Design, NUREG-1503, Vol. 1, July 1994.

3.3-3 Letter from J. V. Parrish, Supply System, to Document Control Desk, NRC, Subject: WNP-2 Request for Approval to Revise Tornado Design Criteria, October 10, 1995 (G02-95-212).

3.3-4 Letter from J. W. Clifford, NRC, to J. V. Parrish, Supply System, Subject: Revision of Tornado Design Criteria for the Supply System WNP-2, dated January 24, 1996 (G12-96-032).

3.3-5 Miller, D. R., and Williams, W. A., Tornado Protection for the Spent Fuel Storage Pool, General Electric Company, APED-5696, November 1968.

3.4 WATER LEVEL (FLOOD) DESIGN

3.4.1 FLOOD PROTECTION

3.4.1.1 External Flood Levels

3.4.1.1.1 Design Basis Flood

From the flooding conditions considered in Section 2.4, the design basis flood (DBF) condition arrived at for use in the protection of Seismic Category I structures and safety-related systems and components is that flood which results from the probable maximum precipitation (PMP) event. The PMP event results in a flood elevation of 433.3 ft mean sea level (msl). This event includes an additional 2.2 ft to account for wind wave action.

3.4.1.1.2 Breach of the Grand Coulee Dam

Floods associated with breaches of the Grand Coulee Dam are discussed in Section 2.4.4. The associated highest flood level is at el. 424 ft msl with wave action included.

3.4.1.1.3 Acceptance Criteria

The facility design and equipment locations are in accordance with General Design Criterion 2, as related to systems and components withstanding flood conditions, and Regulatory Guide 1.59, Revision 1, dated April 1976.

3.4.1.2 Groundwater Levels

3.4.1.2.1 Design Basis Groundwater

The design basis groundwater conditions are defined in Section 2.4.13. From the groundwater conditions considered in Section 2.4.13, the design-basis groundwater condition for use in the protection of Seismic Category I structures and safety-related systems and components is a rise of the present groundwater table with the possible construction of Ben Franklin Dam as discussed in Section 2.4.13.

The design-basis groundwater is el. of 420 ft msl. The normal groundwater table is at approximately el. 380 ft msl.

3.4.1.2.2 Breach of the Grand Coulee Dam

The effects on the groundwater table due to a breach of the Grand Coulee Dam is discussed in Section 2.4.4. This flood would peak for a short time and would not affect the design-basis groundwater level of 420 ft msl due to its short duration.

3.4.1.2.3 Design Basis Flood Probable Maximum Precipitation

As stated in Section 3.4.1.1.1, the worst DBF condition results from the PMP event. Due to the short duration of this flood and its confines, groundwater level at the site would not be affected.

3.4.1.3 Identification of Structures, Systems, and Components

Seismic Category I structures and safety-related systems and components are identified in Section 3.2. Figures 1.2-1 through 1.2-24 show locations and elevations for systems and components. See Section 2.4.2 for discussion of flood protection of safety-related systems and components.

3.4.1.4 Description of Structures, Systems, and Components

3.4.1.4.1 Flood Protection Requirements

3.4.1.4.1.1 External Flood Protection Requirements. The plant site elevation at Seismic Category I structures and safety-related systems and components is approximately 441 ft msl, except at the spray ponds where the finish grade elevation is 434 ft msl and the spray pond overflow weirs are at 434.5 ft msl. These elevations are sufficient to protect the plant site and, therefore, Seismic Category I structures and the safety-related systems and components housed therein against the DBF. Exterior and access openings to all Seismic Category I structures are located above the plant site grade and, therefore, above the DBF level. Flood protection measures are not provided since they are not required.

3.4.1.4.1.2 Internal Flood Protection Requirements. Section 3.4.1.5.2 discusses internal flood protection measures provided for safety-related systems, equipment, and components.

Figures 1.2-2, 1.2-7 through 1.2-17, and 1.2-22 illustrate plant arrangement and layout and show that safety-related equipment is located within individual rooms or compartments. The pump rooms located on the 422 ft 3 in. elevation are enclosed by reinforced-concrete walls. Penetrations and doors in these walls are provided with seals that minimize the effects of flooding between rooms should a break occur in one of the rooms.

The potential flooding and environmental effect attributable to postulated through-wall leakage cracks in moderate-energy fluid piping systems and postulated rupture of high-energy fluid piping systems are evaluated and discussed in Section 3.6.1.

Section 6.3 addresses single failure of the emergency core cooling systems (ECCS) piping, including leak detection requirements for ECCS passive failures, ECCS passive failures during long-term cooling, and potential flooding attributable thereto.

Section 9.3.3 discusses the design bases, system descriptions, safety evaluation testing and inspection requirements, and the instrumentation requirements relative to equipment and floor drainage systems. The design bases used ensure equipment and floor drainage systems integrity during normal plant operation and preclude any danger to health and safety of plant personnel, the environs and the general public. Five independent sumps are provided in the reactor building at floor el. 422.25 ft. These sumps serve pump rooms as shown on Figures 1.2-6 and 1.2-7. There is a single equipment drain sump for the reactor building (see Figure 9.3-9) located in the CRD/Condensate pump room. This sump also connects to the RCIC pump room through an unisolable drain header. The other four sumps are floor drain sumps serving the ECCS pump rooms. A single floor drain sump serves no more than two rooms. A sump located in one room is connected to a second room by a drain header containing a single isolation valve. Each sump is equipped with a level monitoring system, which automatically actuates the sump pump when high water level is reached in the sump. Each sump pump discharges to the Radwaste System. The isolation valve located in the header between connected rooms automatically closes on high water level in the sump to isolate the room with the leak.

The sumps collect water from such typical sources as equipment drains from the drywell and from other equipment carrying low purity water and from the drywell floor drain and other floor and pit drains. In the event of a pipe break in one of the pump rooms of sufficient size to exceed the capacity of the sump pump and overflow a sump in one room, the effects of common mode flooding between pump rooms are minimized by the following:

a. The reactor building equipment drain sump, located in the CRD/Condensate pump room, serves only the RCIC and the CRD/Condensate pump rooms. Although both rooms will be affected by a flood occurring in one room, analysis ensures that sufficient safe shutdown equipment remains unaffected by the flood, preserving the ability to safely shutdown the plant. Existing equipment drains located in the RHR pump rooms A and B are capped and, thus, do not connect to each other or to a common equipment drain sump. See Section 9.3.3.2.1.

b. The floor drain sumps serving more than one pump room have a single isolation valve in the drain header between pump rooms. This valve is fail-safe and automatically closes on a high water level in the sump. Accordingly, flooding

in any pump room, exceeding the capacity of the sump pump, will be confined to the room in which the leakage occurs with only minimal leakage through wall penetrations and door seals into other rooms or areas. Analysis is performed to ensure that sufficient safe shutdown equipment remains unaffected by the flood, preserving the ability to safely shutdown the plant. The high sump level also annunciates in the main control room. See Section 9.3.3.2.2.1.

c. Wall-mounted Class 1E level switches are also located in each of the ECCS and RCIC pump rooms and are mounted just above floor level. These level switches ensure that if a failure of the sump pump, the sump header isolation valve, or sump alarm system should occur in any of these rooms during a flood event, prompt operator notification of the event would be received allowing sufficient time for mitigating actions and safe plant shutdown. See Sections 6.3.2.5 and 9.3.3.2.2.1.

Administrative controls ensure that separation criteria is maintained by ensuring the appropriate doors and hatches are closed.

3.4.1.4.2 Groundwater Protection Requirements

Seismic Category I structures house safety-related systems and components and Seismic Category I components. The elevation of the lowest floor surface of these structures is as follows:

Structures	Elevation of Top of Floor
Reactor building	422 ft 3 in.
Radwaste and control room areas of radwaste control building	437 ft 0 in.
Diesel-generator building	441 ft 0 in.
Spray ponds 1A and 1B	420 ft 0 in.
Standby service water pump houses 1A and 1B	408 ft 3 in.
Retaining area for the condensate storage tanks	441 ft 0 in.

Seismic Category I structures and safety-related systems and components are located above the present groundwater el. 380 ft msl and are not subject to any force effects of buoyancy and static water from this groundwater elevation. Uplift and increased lateral hydrostatic pressure are considered in the design of all Seismic Category I structures and safety-related systems and components, to ensure their safety in the event of a rise in the groundwater table to 420 ft msl. Standby service water pump houses 1A and 1B are designed to resist the increased hydrostatic pressure which would result from the rise in the groundwater to el. 420 ft msl. The lowest floor surface in the reactor building is the top of the foundation mat at el. 422 ft 3 in. msl. Since this is above the design basis groundwater level, the structure is unaffected by the force effects of buoyancy and static water due to groundwater at el. 420 ft msl. Groundwater el. 420 ft msl was compared with foundation levels of Seismic Category I structures and it was determined that waterproofing is not required. Seismic Category I piping and electric conduit penetrations that are below grade are above the design basis groundwater table, and sealing against groundwater pressure is therefore not required. However, all pipes penetrating exterior walls are waterproofed sealed by boots installed on both sides of the wall penetration; all electrical conduit penetrations are through-wall waterproof sealed using silicon foam.

The only materials underlying the site that might exhibit unfavorable response to seismic or other events under saturated soil conditions are the loose to medium dense, fine to coarse sand with scattered gravel, in the upper approximate 40 ft of the soil profile. These were removed and recompacted as structural fill, as described in Sections 2.5.4.8 and 2.5.4.12. Structural fill supports the Seismic Category I structures, including the turbine generator building and service building, in the central plant complex. Structural fill, as required, is also utilized below the other Seismic Category I and safety-related structures including underground piping and electrical duct banks. The structural fill is compacted to a minimum of 75% relative density and an average relative density of not less than 85%. The compacted backfill will eliminate the possibility of liquefaction and provide satisfactory foundation performance should the groundwater level at the Columbia Generating Station site rise.

To evaluate the possible effects of a gross rise in groundwater levels, Shannon and Wilson, soil consultants, performed a series of repetitive triaxial tests in identical soils in the dry and saturated states and concluded that saturation would not necessitate changes in allowable bearing pressures or settlement calculations as discussed in Section 2.5.4.10.

To provide conservatism in the design of structures, the seismic dynamic response of the structures and components was examined over a range of soil shear moduli, as discussed in Section 2.5.4.7.

The possibility of soil liquefaction under the effects of the safe shutdown earthquake was evaluated for the conditions found to exist at the Columbia Generating Station site. Soils having high (75% plus) relative densities have been found in the past to be safe against liquefaction. In the soil underlying the foundations at Columbia Generating Station, liquefaction potential can only be assessed on the basis of soil type and general characteristics.

The foundations of all critical structures lie on compacted fill of fine to coarse sand with gravels. The phenomenon of the liquefaction has never been observed in such soils as this, and therefore, liquefaction was not postulated at the Columbia Generating Station site.

3.4.1.5 Flood Protection Measures

3.4.1.5.1 External Flood Protection Measures

As discussed in Section 3.4.1.4.1, external flood protection measures are not provided since they are not required. Equipment is located so that it is not vulnerable. Protection is not required to cope with potential leakage from such phenomena as cracks in structure walls. Since Seismic Category I structures are located at sufficient grade and distance from the Columbia River, as described in Section 2.4, the effects of wind wave action, including spray, do not require flood protection measures.

3.4.1.5.2 Internal Flood Protection Measures

The primary or safety-related functions fulfilled by the reactor building include the capability to withstand the effects of flooding from internal sources. Measures provided are discussed in Sections 3.8.4.1.1, 3.8.4.3.3, and 3.8.4.4.1.1. ECCS and RCIC pump rooms located in the reactor building basement at elevation 422 ft 3 in. are designed to withstand the effects of flooding between and including the top of the foundation mat at el. 422 ft 3 in. and el. 466 ft. Although not watertight, the doors and penetrations in these pump room walls are provided with seals that will minimize flooding between rooms (except for the RCIC and CRD pump rooms that are connected by an unisolable sump pipe) even with significant hydrostatic pressure generated from flooding water levels up to 466 ft. These pump rooms, comprised of exterior walls, interior walls, biological shield wall, isolation valves (when provided), penetrations, and doors are designed so that any one compartment at any one time, flooded to an elevation of 466 ft, can withstand the effects of seismically induced water sloshing loads. Section 3.8.4.3.3 discusses the CRD/Condensate pump room and railroad bay south exterior wall design hydrostatic pressure. Section 3.8.4.1.1 discusses the equipment hatch in the vehicle air lock (railroad bay) floor at el. 441 ft. See Section 3.4.1.4.1.2 for additional nonstructural related internal flood protection measures.

3.4.1.6 Emergency Flood Protection

Emergency flood protection procedures for bringing the reactor to a safe shutdown are unnecessary because flood conditions do not impact safe shutdown operation.

3.4.2 ANALYSIS PROCEDURES

Seismic Category I structures are located at sufficient grade and distance from the Columbia River so that dynamic water forces are precluded. Seismic Category I structures are designed

for the force effects of buoyancy and hydrostatic pressure due to the design basis groundwater in conjunction with loading combinations in Section 3.8.4. Seismic Category I structures are checked for stability and foundation pressures. In all cases, the dead loads of structures maintain stability and a positive soil bearing pressure. Design loads due to groundwater force application are applied to all Seismic Category I structures as follows:

a. A vertical hydrostatic pressure due to the water head below el. 420 ft msl on subgrade surfaces of structures and a lateral hydrostatic pressure on subgrade surfaces of structures. The lateral pressure is treated as an additional triangular loading increasing at the rate of 62.4 lb/ft^2 per vertical foot from el. 420 ft to the bottom of the structure, and

b. A buoyant force equal to the weight of water displaced by the structure.

The loading combinations used in conjunction with hydrostatic pressure due to groundwater, taken from Table 3.8-9, are

a. $U = 1.4D + 1.7L + 1.7\ P_o + 1.4F + 1.7Q$

b. $U = 1.4D + 1.7L + 1.4\ T_o + 1.7\ P_o + 1.4F + 1.7Q$

c. $U = 0.9D + 1.4F + 1.7Q$

d. $U = 0.9D + 1.4\ T_o + 1.4F + 1.7Q$

e. $U = 1.1D + 1.3L + 1.3\ P_o + 1.1F + 1.3Q + 1.3W$

f. $U = 1.1D + 1.3L + 1.1\ T_o + 1.3\ P_o + 1.1F + 1.3Q + 1.3W$

g. $U = 1.4D + 1.7L + 1.7\ P_o + 1.9E + 1.4F^* + 1.7Q$

h. $U = 1.4D + 1.4L + 1.4\ T_o + 1.4\ P_o + 1.4E + 1.4F^* + 1.4Q^*$

In the above load combinations, Q denotes lateral pressure on subgrade surfaces of structures due to either dry or saturated soils; and Q* denotes lateral pressure, including seismic effects, on subgrade surfaces of structures due to either dry or saturated soils. In applying the above loading combinations in conjunction with lateral hydrostatic pressure due to groundwater, the value for saturated soil is used.

In the above load combinations, the vertical hydrostatic pressure due to the water head below el. 420 ft msl and acting on subgrade surfaces of structures is included in D, dead loads, with consideration given to the direction of the hydrostatic pressure. The loading combinations

used in conjunction with hydrostatic pressure due to internal flooding are given in Table 3.8-9. The definitions of load terms used in the load combinations are given in Section 3.8.4.3.3.

3.5 MISSILE PROTECTION

The CGS missile protection design basis conforms to 10 CFR 50, Appendix A, General Design Criteria for Nuclear Power Plants, Criterion 4, Environmental and Missile Design Bases. The objectives of missile protection design are to ensure that the plant can be brought to and kept in a safe shutdown mode and to prevent offsite radiological consequences assuming an additional single component failure.

The primary provisions incorporated into the design of the CGS facility to preclude damage to the systems necessary to achieve and maintain a safe plant shutdown are separation and redundancy. These provisions provide that in the event of an accident plus an additional active component failure, where a system required for safe (cool) shutdown is rendered unavailable, enough systems are left available to bring the plant to a safe (cool) shutdown without allowing any offsite radiological consequences. This redundancy and separation is obtained by the deliberate routing of systems, by the presence of structural floors, walls, structural steel members, and adjacent equipment which serve as barriers.

Design against generated missiles involves an initial selection process to define postulated missiles, an evaluation of postulated missile credibility, then a damage assessment to evaluate the effects of credible missiles, and finally, if necessary, to ensure safe shutdown, the provision of barriers or physical modifications of systems and components to preclude damage.

Structures housing systems and components essential for safe shutdown are designed to withstand externally generated missiles so that essential systems and components are not damaged by such missiles or by the secondary effects of such missiles.

3.5.1 MISSILE SELECTION AND DESCRIPTIONS

3.5.1.1 Internally Generated Missiles (Outside Containment)

3.5.1.1.1 Systems Available for Safe Shutdown

Systems available outside containment to facilitate safe shutdown include: high-pressure core spray (HPCS), low-pressure core spray (LPCS), residual heat removal (RHR), standby service water (SW), reactor core isolation cooling (RCIC), control rod drives (CRD), and the reactor feedwater system (RFW). These systems and their function are described in Sections 4.6, 5.4.9, 7.3, and 7.4.

Figures 3.5-1 through 3.5-15 illustrate the location of these systems. Seismic categories, quality group classifications, and reference sections are provided in Table 3.5-1.

3.5.1.1.2 Missiles Due to Rotating Equipment Failure

The systems located outside the primary containment have been reviewed to identify potential rotating equipment missiles. The design objective is to prevent the generation of missiles and their effects.

All rotating equipment (e.g., pumps, turbines, fans, and compressors) outside the primary containment have been evaluated to determine missile generation potential (postulated missiles), missile credibility, and an analysis of credible missile effects was completed. Credible missiles outside containment, missile sources, safety-related systems requiring protection (if any), and the extent of damage to safety-related systems (if any) are listed in Table 3.5-2. All emergency core cooling systems (ECCS) rotating equipment outside the primary containment are grouped by division in different rooms or areas of the plant, separated by walls or barriers, so that a single missile cannot damage redundant systems. The walls or barriers are designed to contain all missiles.

The RCIC turbine is prevented from reaching a runaway speed, where component failure could occur, by overspeed tripping devices. However, the RCIC turbine, similar to all plant rotating equipment, is also evaluated for credible missile generation at normal full speed operation. In addition, as with the ECCS systems, the RCIC turbine is located in a separate compartment.

3.5.1.1.3 Missiles Due to Pressurized Component Failure

The potential of the following equipment to generate missiles was investigated:

a. High energy piping

Pressurized piping in systems where the service temperature exceeded 200°F and/or the service pressure exceeded 275 psig was evaluated for potential generation of missiles. High energy piping pipe whip is discussed in Section 3.6.

b. Valve bonnets

1. Pressurized seal bonnets

Valves with an American National Standards Institute (ANSI) rating of 900 psig and above are pressurized seal bonnet type valves, constructed in accordance with the American Society of Mechanical Engineers (ASME) Boiler and Pressure Vessel (B&PV) Code Section III. Valve bonnets, on pressure seal bonnet type valves, are prevented from becoming missiles by the retaining ring, which would have to fail in

shear, and by the yoke, which would capture the bonnet or reduce bonnet energy.

The bonnet bolts preload the pressure seal gasket to seal the valve initially. When pressurized, the valve is sealed by process fluid pressure and the bonnet bolts are under no load. All ASME III, Class I, 900# bonnet seal type valves were analyzed per ASME B&PV Code Section III requirements. Valve design pressures used in these analyses were given by the ASME B&PV Code Section III, Division 1, Subsection NB, Figure NB-3545.1-2, for weld-end valves. Using a typical pressure seal valve, the total thrust load on the retaining ring and valve body was calculated. The results demonstrated that both the retaining ring and valve body meet the ASME B&PV Code Section III, Division 1, NB-3227, requirements for pressures much higher than the normal operating pressure of the valve.

The majority of valves inside containment have massive valve operators which are supported by the yoke. For these valves, the valve operators act as an additional limitation to the yoke becoming a missile.

For a yoke clamp to fail, it must be assumed that the retaining ring fails completely and instantaneously so that the bonnet could strike the yoke. The yoke is normally under no load and complete failure of the yoke clamp is not considered credible.

Because of the highly conservative design of the retaining ring of these valves, bonnet ejection is highly improbable, and hence bonnets are not considered credible missiles.

2. Bolted bonnets

Most valves of ANSI rating 600 psig and below are valves with bolted bonnets. Valve bonnets are prevented from becoming missiles by limiting stresses in the bonnet-to-body bolting material by requirements set forth in the ASME B&PV Code Section III and by designing flanges in accordance with applicable code requirements. Even if bolt failure were to occur, the likelihood of all bolts experiencing simultaneous complete severance failure is remote. A study of bolted valve bonnets was made in which 25% of the connective bolts in the circular pattern were assumed missing. The stresses occurring under operating conditions with these bolts missing were found to be within acceptable limits. The widespread use of valves with bolted bonnets and the lack of

historical incidence of complete severance failures of bonnets confirms that bolted valve bonnets need not be considered credible missiles.

3. Screwed-typed bonnets

Some valves in the 1 in. to 1.5 in. size range have coarse threaded bonnets which screw into the valve body. These valves were analyzed and found to have low stress intensities in the bonnet retaining threads. The valve design stress intensities were found to be a minimum of 4.5 times the stress intensities that will be experienced by the valves. Because of the highly conservative design of these valves, they are not considered credible missiles.

c. Valve stems

Valve stems are not considered credible missiles if at least one feature in addition to the stem threads is included in their design to prevent ejection; for example, valves with backseats.

d. Thermowells and sample probes

Temperature or other detectors installed on piping or in wells are evaluated as potential missiles if failure of a single circumferential weld would cause their ejection. This is highly improbable since a complete and sudden failure of a circumferential weld is needed for a detector to become a missile. These circumferential welds were analyzed and found to have yield stress values from six to 20 times the stress intensities that will be experienced in service. Because of their highly conservative design, thermowells and sample probes are not considered credible missiles.

e. Nuts and bolts

Nuts, bolts, nut and bolt combinations, and nut and stud combinations are unlikely to fail because of the low stress intensities for these parts. The ASME and ANSI Codes limit the allowable stresses in bolts and studs to 20% to 30% of yield. These low stress intensities are ensured by measuring the torque of all bolts, studs, and nuts during installation. Because of their highly conservative design, nuts and bolts are not considered credible missiles.

f. Blind flanges

Bolted blind flanges are not considered credible missiles because of the extremely unlikely occurrence of all bolts experiencing simultaneous complete severance failure as discussed in Item b.2 above.

g. Nitrogen tanks and bottles

Nitrogen tanks and bottles in the reactor building provide nitrogen for CRDs, charging of main steam safety/relief valve (SRV), isolation valve accumulator tanks, and instrument nitrogen inside containment. These tanks and bottles have design pressures considerably in excess of their operating pressures. Because of their highly conservative design, installed nitrogen tanks and bottles are not considered credible missiles.

No credible missiles are in a position to impact any of the nitrogen tanks or bottles.

3.5.1.1.4 Evaluation of Postulated Missiles

a. Assessment of postulated missile credibility

Postulated missiles are analyzed to determine if a credible failure mode resulting in a missile exists. Failure modes determined to be credible are then assessed for impact on plant safe shutdown.

b. Assessment of potential credible missile damage

The ability of the plant to achieve safe shutdown is ensured by physical separation and redundancy of safety-related systems. The adequacy of the physical separation and redundancy of safety-related systems was evaluated using the following procedure:

1. Target determination

Based on the missile location and orientation, the target areas are predicted. Trajectories are selected to encompass the most adverse conditions. The essential systems within that region are assumed damaged and not available for a safe shutdown;

2. Evaluation of system damage

The essential systems which are available after the worst postulated missile accident and the most critical additional single failure are determined. An evaluation is then made to determine whether these remaining systems are sufficient to achieve safe reactor shutdown; and

3. Protection of systems

When the separation and redundancy of the essential systems is not adequate, or when a redundant system is not available, one or more of the following measures are taken to ensure safe shutdown:

(a) The orientation of the credible missile is changed so that systems necessary for safe shutdown are not damaged,

(b) Missile barriers are provided, and

(c) It is shown that the essential components will not be damaged by the credible missile.

c. Determination of missile energies

One of the following methods is used to calculate the extent of the damage caused by a credible missile:

1. Piston-type missiles

The velocity of a piston-type missile is calculated by assuming that the work done will be converted into kinetic energy of the missile with no losses of energy due to friction or air resistance.

Work is the integral of force times displacement, while the kinetic energy of the missile is one-half the product of the missile mass times the square of the missile velocity. Assuming the applied force constant (PA_o), the kinetic energy is equated to the work done (Reference 3.5-1). Subsequently, the missile velocity is obtained by the expression:

$$V = \left[\frac{2\,PA_o\,L}{m}\right]^{1/2}$$

(Reference 3.5-1)

where:

V = the initial velocity at the end of a piston stroke (ft/sec)

P = pressure of the fluid (psi)

A_o = cross-sectional area of the piston ($in.^2$)

L = length of the stroke in ft

m = mass of missile ($lb\text{-}sec^2/ft$)

2. Jet-propelled missiles

Postulated jet-propelled missiles are propelled by fluid escaping from a pressurized system in which there is essentially no lateral containment of the fluid. The escaping jet will not only impinge on the missile, but will also flow around and past the missile.

The velocity of this type of postulated missile is estimated by (Reference 3.5-1):

$$\left(1 - \frac{V}{V_f}\right) - \text{Log}_e\left(1 - \frac{V}{V_f}\right) = K_1 - \frac{K_2}{N_o + X \text{ Tan } B}$$

where:

$$K_1 = \left(1 - \frac{V_o}{V_f}\right) - \text{Log}_e\left(1 - \frac{V_o}{V_f}\right) + \frac{K_2}{N_o}$$

$$K_2 = \frac{A_o A_m P_b}{m\pi(\text{Tan } B)}$$

V = missile velocity at distance X (fps)

V_f = jet velocity = (fps)

N_o = radius of throat (ft)

P_f = density of the jet fluid ($lb\text{-}sec^2/ft^4$)

X = distance traveled (ft)

B = angle of jet expansion, degrees from normal

V_o = initial velocity of missiles

A_o = throat area (ft^2)

A_m = cross-sectional area of missile (ft^2)

m = mass of missile ($lb\text{-}sec^2/sec$)

3. Stored strain energy missiles

Stored strain energy missiles are assumed to convert all the strain energy at which they fail into kinetic energy. The velocity is calculated from the following formula (Reference 3.5-1):

$$V = \left[\frac{g}{EW}\right]^{1/2} S$$

where:

V = missile velocity (ft/sec)

E = modulus of elasticity (lb/ft^2)

W = specific weight of missile (lb/ft^3)

S = ultimate stress in the missile before failure (lb/ft^2)

g = acceleration of gravity (ft/sec^2)

4. Rotating Machinery

A variety of missiles from rotating machinery can be treated by considering each as a rotating block. Because it is part of a rotating structure, the block is considered to be initially rotating about its axis of revolution at a speed, ω, radians per second. The kinetic energy (KE) of the block is given by (Reference 3.5-4):

$$KE = \frac{1}{2}\left[Rcg^2 + K^2\right]\left(\frac{w}{g}\right)(\omega)^2, \text{ ft} - \text{lb}$$

where:

Rcg = radius to the center of gravity (CG) of the rotating block, measured from the initial axis of rotation in the machinery, ft

K = radius of gyration of the rotating block, about the cg axis of the rotating block

w = block weight, lb

g = acceleration of gravity, ft/sec^2

ω = angular velocity, rad/sec

In this expression the Rcg term gives the kinetic energy due to translation, while the K term gives the kinetic energy due to rotation of the block about its cg axis.

3.5.1.1.5 Example of Postulated Missile Evaluation

a. Assessment of postulated missile credibility

The reactor protection system motor generator sets in the critical dc switchgear rooms in the reactor building (el. 467 ft 0 in.) were analyzed to determine their credibility as missiles. A structural failure of the 1800 rpm flywheel during the normal operation of the motor generator would produce high energy missiles with the potential to damage systems, components, or structures in their paths. Motor generator set modification to eliminate or contain the flywheel missiles was evaluated, but a feasible modification was not practical. The flywheels were, therefore, credible missiles.

b. Assessment of potential credible missile damage

The flywheel missiles were postulated to exit the motor generator sets along a plane perpendicular to the motor generator set, with the missile exiting a maximum of 10 degrees from the perpendicular plane.

1. Target determination

The potential targets for the flywheel missiles were determined by reviewing the applicable drawings and visual inspection of the target area in the switchgear rooms. It was determined that safety-related cables in these rooms could potentially be damaged.

2. Evaluation of system damage

The safety-related cables which could be damaged by the flywheel provide dc power to instrument panels in the control room and to isolation valves inside containment. Damage to these cables was determined to be unacceptable.

3. Protection of systems

It was determined that there was not a feasible method of providing that the cables would not be damaged by the flywheel missiles. To preclude damage to the safety-related cables, the following alternatives were investigated:

(a) The motor generator sets were analyzed to determine if a change in orientation was feasible. This was not a feasible alternative.

(b) The feasibility of constructing a barrier around the flywheel was investigated. This was a feasible alternative.

c. Barrier design

A missile barrier proved to be the only feasible alternative. The barrier was designed to contain the highest energy missile that could be produced by the flywheel. The barrier was constructed of steel and energy-absorbing aluminum honeycomb material and firmly anchored to the concrete floor. This eliminated the effects of the credible missile. A tabulation of plant systems protected by missile barriers is provided in Table 3.5-3.

3.5.1.2 Internally Generated Missiles (Inside Containment)

3.5.1.2.1 Systems Available for Safe Shutdown

Figures *3.5-16* through 3.5-32 describe the mechanical and instrumentation locations of systems available for a safe shutdown. Each system (LPCS, HPCS, RHR, ADS, CRD, and primary containment) is color coded to specify the location of structures, systems, or

components. In addition, the reactor protection system and containment isolation valves inside containment are available for safe shutdown of the plant and to prevent offsite radiological consequences. Information pertaining to applicable seismic category, quality group classification, and reference sections where these systems are described is provided in Table 3.5-4. The evaluation of credible missile kinetic energies and missile target determinations is discussed in Section 3.5.1.1.4. Target and barrier damage evaluations are discussed in Section 3.5.3.

3.5.1.2.2 Missiles Due to Rotating Equipment

Rotating equipment inside containment consists of the following:

a. Recirculation pump and motor

The most substantial piece of nuclear steam supply system (NSSS) rotating machinery is the recirculation pump and motor. This potential missile source is discussed in Reference 3.5-4.

It is concluded in Reference 3.5-4 that destructive pump overspeed is highly improbable. If it occurred, it could result in failure of certain pump and motor components having the potential to become missiles. A careful examination of the pump and motor structure shows that rotor or shaft failure will not result in ejection of motor-generated missiles, and impeller missiles cannot penetrate the pump case. Reference 3.5-4 concludes that in the unlikely event of impeller failure resulting in ejection of missiles through ruptured pipe, penetration of containment by missile fragments is highly improbable. Evaluation of the effects on safety-related systems of impeller fragments that might be ejected from openings in ruptured pipe is not evaluated because of the extreme improbability of this event and because the effects would not be more severe than the assumed consequences of jet impingement due to pipe inside containment as discussed in Section 3.6. The recirculation pump and motor are, therefore, not considered to be credible missile sources.

b. Fans as potential missiles

The fans inside primary containment are designed such that the casing will restrain any possible missile. Therefore, fans and parts thereof are not considered as possible sources of missiles.

3.5.1.2.3 Missiles Due to Pressurized Component Failure

A discussion of the potential for missile generation from the failure of pressurized components, e.g., valve stems, valve bonnets, and temperature element assemblies, is presented in

Section 3.5.1.1.3. That discussion is also applicable to pressurized components inside containment. In addition, SRV and main steam isolation valve (MSIV) accumulators are particular to inside containment.

Pressurized ASME III vessels, such as SRV and MSIV accumulators, are not considered credible missiles. These vessels have low stresses and operate in the "moderate energy" range and, therefore, any failures would be a crack-type and not of concern for missile generation.

All potential sources of postulated missiles inside the primary containment were analyzed to determine missile credibility utilizing the criteria discussed above and in Section 3.5.1.1.3, as required by General Design Criterion 4, "Environmental and Missile Design Basis." It was determined that all postulated missiles inside the primary containment incorporated design features that eliminated their credibility as potential sources of missiles.

3.5.1.2.4 Falling Objects

Structural elements, equipment, and components inside containment which could be considered as potential falling objects are evaluated in accordance with Section 3.7.2.8.

3.5.1.2.5 Secondary Missiles Generated by Postulated Credible Primary Missiles

Secondary missiles are not considered credible missiles due to their low probability of occurrence and their low kinetic energy levels. The probability of damage due to a secondary missile is the probability of occurrence of a primary missile times the probability of hitting a part that can become a secondary missile times the probability that the part will actually become a missile. This probability is very low.

The level of stored kinetic energy in a secondary missile will be low because of the large energy required to produce a secondary missile. In addition, no reliable method to predict secondary missile characteristics is known, other than those characteristics in common with primary missiles.

3.5.1.3 Turbine Missiles

In April 1992, the original Westinghouse shrunk-on-disc type LP rotors were removed and new Westinghouse Fully Integral LP rotors were installed. The LP turbine missile analysis is based on Fully Integral rotors using a probabilistic method (Reference 3.5-27).

It is concluded that the probability of damage to safety-related systems by turbine missiles is acceptably low, due to (a) the protection provided by reinforced-concrete structural barriers, (b) the calculated probability of turbine missile generation, and (c) periodic testing and inspection of turbine overspeed protection systems with associated corrective action as required.

3.5.1.3.1 Safety-Related Targets

Target areas which are evaluated for capability to protect safety-related equipment, components, and systems from postulated turbine missiles consist of the following:

a. Vertical targets

1. Reactor building north exterior wall,

2. Control room north wall, and

3. North wall of vertical cable chase, between reactor building and control room.

b. Horizontal targets

1. Reactor building refueling floor,

2. Roof over vertical cables chase, and

3. Floor slab above control room.

3.5.1.3.2 Turbine Placement and Orientation

Figure 3.5-33 shows the turbine generator layout relative to safety-related plant structures and turbine missile target areas. Also shown on this drawing is the reinforced-concrete shield wall which acts as a barrier for protection of some safety-related targets from postulated low trajectory turbine missiles. A cross-sectional view through the turbine building and reactor building is shown in Figure 3.5-34 to indicate relative elevations of the turbine and target areas. See Figures 1.2-4, 1.2-8 and 1.2-16 for a general arrangement drawing of the turbine building, reactor building, and control building at the turbine operating floor elevation. CGS has an "unfavorable oriented" turbine generator in relation to the identified safety-related targets.

3.5.1.3.3 Missile Identification and Characteristics

3.5.1.3.3.1 High Pressure Turbine. Postulated missiles from the high pressure turbine (HPT) are shown in Reference 3.5-22 to have insufficient energy to penetrate the casing at normal operating speed. At 20% overspeed (120% of normal, or rated speed), HPT missiles are postulated to penetrate the casing, but at velocities too low to reach safety-related targets. The minimum bursting speed of the high pressure turbine rotor, based on minimum specified mechanical properties of the rotor material, is 300% of the rated speed (Reference 3.5-6).

The maximum speed at which the unit may rotate is 3200 rpm, which is 178% of rated speed 1800 rpm (Reference 3.5-27). At this speed the highest stressed low pressure turbine disc would fracture, damaging the turbine to the extent that additional overspeed would not be possible. Therefore, high pressure turbine missiles are not considered.

3.5.1.3.3.2 Low Pressure Turbine. Each low pressure turbine consists of a double-flow rotor assembly, an outer cylinder, two inner cylinders, and stationary blade rings. The rotor is a fully integral, single forging consisting of the shaft, disks, and couplings without any shrink fits or keyways and is made with low stress corrosion cracking (SCC) susceptible materials.

Westinghouse Report "Analysis of the Probability of the Generation of Missiles from Fully Integral Nuclear Low Pressure Rotors" (Reference 3.5-27) states

> To assess the probability of missile generation resulting from a burst of a fully integral nuclear low pressure rotor, five potential failure mechanisms are considered:
>
> a. Ductile burst,
>
> b. Fracture resulting from high cycle fatigue cracking,
>
> c. Fracture resulting from low cycle fatigue cracking-startup/shutdown cycles,
>
> d. Fracture resulting from stress corrosion cracking, and
>
> e. Destructive overspeed.
>
> All the listed failure mechanisms demonstrate that the new Fully Integral rotor design significantly reduces the likelihood of missile generation, except for the destructive overspeed mechanism.
>
> The probability of reaching a destructive overspeed for the Fully Integral LPT rotor is primarily dependent on the DEH control system, which functions to avoid this condition.

3.5.1.3.4 Strike and Damage Probability

A probabilistic approach is adopted to assess the possibility of damage to systems required for safe shutdown or of accidents which could result in potential offsite exposure due to high trajectory missiles. The probability of this occurring is represented by combined probabilities of

$$P_4 = P_1 \times P_2 \times P_3$$

where:

P_1 = missile generation probability

P_2 = probability of a missile striking a structure or component required for safe shutdown or whose failure could result in release of radioactivity

P_3 = probability of significant damage to the structure or component

P_4 = combined overall probability

The terms and assumptions applicable to this analysis follow the procedures outlined by S. H. Bush in Reference 3.5-7.

3.5.1.3.4.1 Missile Generation Probability. Missile generation probability is based on the failure probability of the Fully Integral rotor design (installed 1992) and the turbine overspeed protection system. The dominant failure mechanisms of the rotor are SCC and turbine overspeed. The P1 values for SCC were provided by Westinghouse (References 3.5-27 and 3.5-28) and meet the requirements of the NRC Safety Evaluation Report (SER) for specific turbine inspection and testing intervals. However, the SER states the NRC position that the LP rotor operation, maintenance, and inspection programs be based on the P1 values being less than the 1×10^{-5} probability requirement for loading the turbine without inspection or inservice restriction. This value is applicable to the CGS unfavorably oriented turbines.

The P1 values for the CGS low pressure turbine Fully Integral rotors for stress corrosion cracking are

Inspection Interval (years)	P1 at Rated Running Speed	P1 at 20% Overspeed
4	4.0×10^{-14}	1.4×10^{-14}
8	8.8×10^{-11}	2.0×10^{-11}
12	4.3×10^{-9}	7.7×10^{-10}
16	5.1×10^{-8}	7.9×10^{-9}
32	8.3×10^{-6}	8.9×10^{-7}

The probability for SCC at 20% overspeed (120% of normal or rated speed) is lower than the SCC at rated speed condition, and therefore not considered in determining the overall strike and damage probability of turbine-generated missiles (Reference 3.5-28).

As with previous rotor designs (including the CGS original built-up rotors and current Fully Integral rotors), the potential exists for SCC to be the dominant failure mechanism depending on inspection interval (Reference 3.5-29). However, in Fully Integral rotor designs, the probability of failure by the SCC mechanism has been reduced drastically and the analysis shows that at the normal inspection interval established by the preventive maintenance (PM) program of 80,000 to 100,000 running hours (translates to 10-12 years), the contribution from SCC to P1 would be approximately 4.3×10^{-9}. Considering typical use factors for nuclear turbines, and considering that the crack locations are readily observable during routine turbine maintenance and inspection per the PM program, it is concluded that the NRC safety criteria of $P1 \leq 1 \times 10^{-5}$ will not be exceeded.

The methodology developed to calculate the probability of missile generation due to overspeed events identifies three turbine overspeed events that can result from the failure of the turbine valves to close following a system separation or a total loss of load (References 3.5-30 and 3.5-31). These overspeed events are design overspeed (approximately 120% of rated turbine speed), intermediate overspeed (approximately 130%), and destructive overspeed (runaway speed in excess of approximately 180%). Design overspeed is assumed when a system separation occurs and a turbine trip does not occur at event initiation, one or more governor valves or two or more interceptor valves fail to close immediately, and a successful overspeed trip closes the throttle valves and reheat stop valves. Intermediate overspeed is assumed to occur when there is a system separation and one or more alignment of reheat stop valves and interceptor valves fail to close. Destructive overspeed is assumed to occur when a system separation occurs and at least one governor valve and one throttle valve in the same steam chest fail to close.

Missile generation probability analyses (References 3.5-30 and 3.5-31), indicate that the design and intermediate overspeed failure probabilities are not major contributors to turbine missile ejection probability for plants with fully integral low pressure rotors.

The P1 value for turbine overspeed is derived from the probability of failure of the turbine overspeed protection system in a manner that results in destructive overspeed and includes consideration for periodic turbine valve testing. Additionally, the P1 value includes conservatism to account for design and intermediate overspeed missile generation. The overspeed protection system is a fault tolerant, redundant, digital electro-hydraulic turbine control and overspeed protection system (installed-May 2007). The system has the capability of failure detection and on-line repair of critical components. The missile generation probability analysis for potential turbine overspeed yields a missile generation probability of 3.4×10^{-6} for P1 based on a twelve month turbine valve testing interval (Reference 3.5-32).

Combining the SCC mechanism (assuming inspection at 12 year intervals) and the destructive overspeed mechanism to establish a combined P1 value for missile generation, yields a probability of turbine missile generation of 3.4×10^{-6}.

3.5.1.3.4.2 Strike Probability (P2) and Damage Probability (P3). Rather than performing elaborate calculations for site-specific strike and damage probabilities as previously performed for the disc type rotors, generally accepted industry typical values were used for P2 and P3. For CGS, the product of P2 * P3 is 1×10^{-2} for unfavorably oriented turbine generators (Reference 3.5-28).

3.5.1.3.4.3 Combined Overall Probability (P4). Assuming the longest turbine inspection interval of 12 years and a destructive overspeed probability assuming a twelve month turbine valve test interval, the highest overall damage probability for postulated missiles is then calculated by

$$\begin{aligned} P4 &= P1 * P2 * P3 \\ &= (3.4 \times 10^{-6}) * (1 \times 10^{-2}) \\ &= 3.4 \times 10^{-8} \text{ (which is acceptably less than the NRC safety criteria of } P4 \leq 1 \times 10^{-7}) \end{aligned}$$

3.5.1.3.5 Turbine Overspeed Protection System and Testing

A single failure in the overspeed sensing and turbine trip systems will not prevent overspeed protection from operating. The turbine generator is equipped with a fault tolerant and redundant DEH control system.

The DEH control system, with its overspeed protection features and inspection and testing requirements, is described in Sections 7.7.1.5 and 10.2.

3.5.1.3.6 Turbine Valve Testing

Turbine valve testing is discussed in Section 10.2.

3.5.1.3.7 Turbine Characteristics

For information characterizing the Westinghouse turbines used at CGS, refer to Westinghouse report covering the effects of a high pressure turbine rotor fracture (Reference 3.5-6) and low pressure turbine forged integral rotor fractures, (Reference 3.5-27). Therein, the low-pressure disc materials, manufacturing processes, and operating conditions are stated.

3.5.1.4 Missiles Generated by Natural Phenomena

The consideration of potential missiles injected or suspended in a tornado wind stream is based on References 3.5-8 and 3.5-12.

All Seismic Category I and safety-related structures and components are designed to include the effects of missiles generated by the design basis tornado described in Section 3.3.2 except as noted in Sections 3.5.1.4.1 and 3.5.2. Missiles are categorized as either external or internal missiles. External missiles are materials and/or items usually found outside and in the immediate vicinity of the buildings, whereas internal missiles are materials and/or items found inside the buildings. Descriptions, properties, and impact velocities of the design-basis tornado-generated external missiles are shown in Table 3.5-5. Tornado missile protection provided by plant structures is described in Section 3.5.1.4.1. Those structures have adequate thickness to prevent penetration, perforations, and backface spalling. The basis for evaluating missile penetration is discussed in Section 3.5.3. The protection provided for external and internal missiles is discussed in Sections 3.5.1.4.1 and 3.5.1.4.2, respectively.

Figures 1.2-1 through 1.2-24 indicate the location of structures, equipment, and components protected against tornado-generated missiles.

3.5.1.4.1 Tornado-Generated External Missiles

Structures that house systems, equipment, and components essential to safe shutdown are designed to withstand the effects of design-basis tornado-generated missiles described in Section 3.5.1.4. These structures provide protection by the following means:

a. Reactor building

The location of the reactor building with respect to the other plant structures is illustrated in Figure 1.2-1. Portions of the reactor building exterior walls are protected by adjacent structures against direct impact of tornado generated missiles, as indicated in Figure 3.5-35. The exterior walls of the reactor

building, up to the refueling floor at el. 606 ft 10.5 in., are capable of withstanding the impact of the design basis tornado generated missiles. The exterior walls are constructed of 4 ft thick reinforced concrete to el. 471 ft 0 in. which is 30 ft above plant finish grade. From el. 471 ft 0 in. to the refueling floor at el. 606 ft 10.5 in., the exposed exterior walls are constructed of reinforced concrete, 18 in. minimum in thickness. The reactor building exterior wall thickness from plant grade to the refueling floor at el. 606 ft 10.5 in. is adequate to prevent design basis missile penetration and spalling of concrete. (See Figures 3.5-36 through 3.5-38.)

The refueling floor at el. 606 ft 10.5 in. comprises the spent fuel storage pool, dryer/separator pool, and various other items of refueling equipment. The reactor building walls and roof above this floor are constructed of insulated metal siding and insulated metal roof decking erected on a superstructure consisting of a structural steel frame as indicated in Figures 1.2-11 and 1.2-12. The superstructure also supports the overhead bridge crane. The refueling floor at el. 606 ft 10.5 in. is constructed of reinforced concrete of various thicknesses, with a minimum thickness of 18 in. The walls and floor of the pools have a minimum thickness of 5 ft. The equipment on the refueling floor is not required for safe shutdown. The refueling floor and the walls and floor of the pools are sufficiently thick to withstand the effects of the design basis missiles, and to prevent secondary missile effects caused by spalling of concrete. A missile impacting the spent fuel pool does not have sufficient energy to damage the equipment and spent fuel located in the pool, as discussed in Reference 3.5-12.

b. Diesel generator building

The exposed exterior walls of the structure are constructed of reinforced concrete with a minimum thickness of 2 ft 8 in. The roof has a minimum thickness of 1 ft 6 in. The thicknesses of walls and roof are sufficient to withstand the effects of the design-basis tornado-generated missiles. Figures 1.2-22 and 3.5-42 through 3.5-44 illustrate this structure.

c. Radwaste and control building

The exposed exterior concrete walls and roofs, housing safety-related systems, equipment, and components are designed to withstand the effects of the design-basis tornado-generated missiles. Figures 1.2-13 through 1.2-17 illustrate the radwaste and control building and their relative location in the plant complex. The exterior walls that house safety-related equipment have a minimum thickness of 2 ft. The roof of the portion of the building that houses safety-related equipment is 1 ft 6 in. thick (see Figure 3.5-45).

d. Standby service water pump houses and spray ponds

The exterior walls of both pump houses are constructed of reinforced concrete and are 2 ft 4 in. thick, minimum. The roofs of the pump houses are 1 ft thick. These thicknesses are adequate to withstand design-basis tornado-generated missiles. In addition, the two pump houses are redundant to each other. In the event that one pump house is inoperable, the other is capable of providing sufficient service water for safe shutdown. See Figures 3.5-46 and 3.5-47.

The ability of the spray ponds to tolerate the design-basis tornado-generated missiles is discussed in Section 3.3.2.3.

Figure 1.2-20 illustrates the pump houses and spray ponds.

e. Makeup water pump house

The exterior walls and roof of the makeup water pump house are of reinforced concrete and are sufficiently thick to withstand the effects of the design-basis tornado-generated missiles, as discussed in Section 3.3.2.3. The exterior walls, with the exception of the equipment access opening, are 2 ft 4 in. thick and the roof slab is 1 ft 4 in. thick. Figures 1.2-1, 1.2-23 and 1.2-24 furnish its location and arrangement. The 8 ft 0 in. by 10 ft 0 in. equipment access opening is protected by a 14-in.-thick concrete door.

f. Turbine building

Safety-related components in the turbine building are located in areas where tornado missile protection is provided by reinforced-concrete exterior walls, a minimum of 18 in. in thickness, and two reinforced-concrete slabs overhead, at el. 471 ft and 501 ft. Figures 1.2-2 through 1.2-6 illustrate the turbine building.

g. Safety-related systems outside of tornado-hardened structures

The protection provided to the pipe lines and electrical lines located underground between the spray ponds, SW pump houses, makeup water pump houses, reactor building, and the diesel generator building is described in Sections 3.5.2 and 3.5.3. The protection provided to the critical electrical trays in the corridor between the turbine generator building and the radwaste and control building is also described in Sections 3.5.2 and 3.5.3.

3.5.1.4.2 Tornado-Generated Internal Missiles

The tornado-generated internal missiles as mentioned in Section 3.5.1.4 are materials and/or items attached to or found inside a building, but subjected to the design basis tornado described in Section 3.3.2 as a result of a loss of a building exterior wall or roof. The materials and/or items considered as potential tornado-generated internal missiles are discussed below.

a. The reactor building steel framed superstructure uses girts and roof purlins fastened to the building frame by means of controlled release fasteners. The steel girts and purlins are considered to become free falling tornado-generated internal missiles which can strike the roof of the diesel generator building, the radwaste and control building, and main steam corridor slabs, in the event a tornado blows the roofing and/or siding off of the building frame. Structures housing safety-related systems, equipment, and components are designed to withstand the effects of these missiles.

b. In the event that a tornado blows the roof purlins, roof decking, girts, and siding panels off the reactor building frame, the reactor building crane is then exposed to the design basis tornado. The reactor building crane is designed with provisions which preclude it, or any part thereof, from becoming a missile (see Section 3.3.2.3).

3.5.1.4.3 Flood Generated Missiles

The design basis flood el. discussed in Section 3.4 and defined in Section 2.4, exceeds the flood levels associated with breaches of the Grand Coulee Dam. The final plant grade level is higher than the design basis flood. Therefore, flood-generated missiles are not considered in the design of the Seismic Category I safety-related structures and installations.

3.5.1.4.4 Protection and Design

Systems protected from missiles generated by natural phenomena, and barrier design are described in Sections 3.5.2 and 3.5.3 respectively.

3.5.1.5 Missiles Generated by Events Near the Site

Hazards due to missiles postulated in the design basis explosions or accidents at nearby industrial plants, military facilities, pipe lines, or storage facilities can be discounted as discussed in Section 2.2.

The Hydrogen Storage and Supply Facility (HSSF) contains a liquid hydrogen storage tank, ASME tubes (gaseous hydrogen), trailer tubes (gaseous hydrogen) and a hydrogen pipeline to the plant. An analysis shows that an explosion and subsequent missile generation from a

random tank rupture at normal pressure would not affect the plant due to the remote distance of the facility. Another analysis shows that an overpressurization event and subsequent rupture of the liquid hydrogen tank is a credible event. However, the total annual probability of impact for any of the missiles generated is less than 10^{-7} and does not meet the threshold for consideration as a design basis event. The hydrogen storage containers have relief valves to prevent overpressurization.

3.5.1.6 Aircraft Hazards

NUREG-0800, Standard Review Plan, Section 3.5.1.6, "Aircraft Hazards," provides guidance to ensure that the risks from aircraft hazards are low enough for nuclear power plants. If the distance at which aircraft activity occurs meets all the criteria provided in the following, the probability of an aircraft accident resulting in radiological consequences greater than the exposure limits in 10 CFR 50.67 can be considered to be less than about 10^{-7} per year and no additional analysis is required (Reference 3.5-16):

a. The plant-to-airport distance (D) is between 5 and 10 statute miles, and the projected annual number of operations is less than 500 D^2, or D is greater than 10 statute miles and the number of operations is less than 1000 D^2,

b. The plant is at least 5 statute miles from the edge of military training routes, including low-level training routes, except for those associated with a use greater than 1000 flights per year or where activities (such as practice bombing) may create an unusual stress situation, and

c. The plant is at least 2 statute miles beyond the nearest edge of a federal airway, holding pattern, or approach pattern.

Additionally, aviation crashes associated with general aviation (light planes, $<$12,500 lb) may be excluded from this analysis, as tornado design-basis requirements establish structural requirements sufficient to protect safety-related structures, systems, and components against these types of events (Reference 3.5-17).

3.5.1.6.1 Airports

There are no active airports located within 10 statute miles of the CGS site, but there are two commercial airports and six private airports which are active within 20 miles of the site. The annual number of operations of flights from these airports of less than 1000 D^2 is satisfied for all aviation uses at the commercial airports, including general, airtaxi, freight, and commercial traffic.

3.5.1.6.2 Military Airspace Use

The airspace over the Hanford site is periodically used as a marshaling area for military aircraft participating in training missions at the Yakima Training Center. A low-level military training route associated with this training passes above the western edge of the Hanford site about 18 miles west of CGS (Reference 3.5-18). Thus Criterion 2 associated with military use is also satisfied.

3.5.1.6.3 Federal Airways and Airport Approaches

CGS does not satisfy the third criterion identified in Section 3.5.1.6 of being at least 2 statute miles beyond the nearest federal airway, holding pattern, or approach pattern. Therefore, the probability of an aircraft accident resulting in an exposure greater than 10 CFR 50.67 limits has been evaluated.

Figure 2.2-3 shows the commercial airports, low-level federal airways, and airport instrument approaches in the vicinity of the CGS site. Airway V187 (with a minimum altitude of 3500 ft mean sea level) passes over the CGS site. The 14 nautical mile (NM) instrumented approach pattern is also important to the CGS site. Aircraft tend to maintain significant altitude over the Hanford site because of a request by the Federal Aviation Administration (FAA) (Reference 3.5-18).

The Tri-City Airport traffic supervisor provided a conservative estimate of 7500 flights per year that can be expected through airway V187 and the 14 NM approach (Reference 3.5-19). The number obtained is for flights by aircraft that are under instrument flight rule (IFR) flight plans. Aircraft that leave the airport in the general direction of V187 and that are under visual flight rules do not have to file a flight plan and are not required to follow the airway. For the purpose of this evaluation, the total number of aircraft flying through the airspace over CGS is assumed to be those constrained to the airway V187 and those using the 14 NM instrument-approach path (i.e., 7500 per year). Other flight paths are either sufficiently far away (more than 2 miles) with sufficiently low volume or are not currently active.

The aircraft using the Richland Airport may also pass over the CGS airspace. However, the only aircraft over 12,500 lb expected to use this approach would be ambulance (Life-Flight) aircraft using the Richland Airport under adverse weather conditions. Other aircraft activities possibly impacting the CGS site include activities conducted by/for the Department of Energy or their contractors on the Hanford site. These typically consist of less than 10 low-level flights per year over the entire Hanford site airspace (Reference 3.5-19). The additional risk posed by these operations is expected to be very low and is sufficiently bound by the conservatisms used in the above estimates.

The probability per year (P_{PY}) of an aircraft crashing into the plant can be expressed as (Reference 3.5-16) equation 3.5.1.6-1:

$$P_{PY} = C \times N \times A_{eff}/w$$

where:

C = In-flight crash rate per mile for aircraft using airway

N = Number of flights per year along the airway

w = Width of airway in miles

A_{eff} = Effective area of the plant in square miles.

The effective area of the facility is the ground surface area covered by all flight crash trajectories that could impact the surface structure. This area is larger than the facility itself because of the possibility of the aircraft skidding across the ground before hitting the facility as well as the possibility of a direct hit on the structure before striking the ground. The effective area is the sum of the structure's area, the shadow area (behind the structure), and the aircraft skid area (in front of the structure).

3.5.1.6.4 Summary

The probability per year, estimated per Reference 3.5-16, is 9.07×10^{-8}. Thus, the probability of an aircraft accident resulting in radiological consequences exceeding 10 CFR 50.67 limits is below 10^{-7}/year. Therefore, aircraft are discounted as credible missiles and accidents involving aircraft are not considered design basis events.

3.5.2 SYSTEMS TO BE PROTECTED

The structures, systems, and components necessary for bringing the plant to a safe shutdown and the protection provided for these structures, systems, and components from missiles is discussed in Sections 3.5.1 and 3.5.2.

Protection provided for the safety-related structures located outdoors against tornado-generated missiles is described in Section 3.5.1.4 and by turbine missiles in Section 3.5.1.3.

The plant structures, systems, equipment, and components that are required to bring the plant to a safe shutdown condition, or whose failure could lead to offsite radiological consequences under accident conditions, are protected from external (outdoor) missiles by barrier structures or redundant systems as follows:

a. The exposed exterior walls of safety-related structures are designed to protect internal structures, systems, and components. Structures with such exposed exterior walls are described in Section 3.8.4 and shown in figures referred to therein. Figure 3.5-35 illustrates exterior walls subject to tornado-generated missile impact.

b. All openings for heating, ventilation, and air conditioning system fresh air intakes (FAI) and exhausts (EXH), in buildings housing safety-related equipment, are protected against externally generated missiles as indicated in Table 3.5-6. Examples are the louvered openings above the floor at el. 572 ft 0 in. in the north and south walls of the reactor building. These openings are protected by a labyrinth of missile shield walls inside the opening.

c. The SW and the TMU pipelines and electrical lines between the SW pump houses, the TMU pump house, the reactor building, and the diesel generator building are located below grade and are protected from external missiles by sufficient Quality Class I earth cover of high relative density (described in Section 3.5.3). The TMU system is required for safe shutdown only when both spray ring headers are lost to tornado missiles (see Section 3.3.2).

d. The two SW pump houses, the tower makeup water pump house, and the valve boxes along the cooling tower makeup water lines are tornado-hardened (see Section 3.5.3).

e. As described in Sections 3.8.4.1.5 and 3.3.2.3, the spray ponds (except spray headers) are below grade and are protected from external missiles by sufficient Quality Class I earth backfill of high relative density. The spray headers are not required to be protected from tornado missiles.

f. The critical electrical trays in the corridor between the turbine generator building and the radwaste and control building are protected from possible missiles by the cantilever wall on column line 17 (Figure 3.5-48) and the additional 10 ft 0 in. high cantilever barrier wall immediately east of it. The 10 ft 0 in. high barrier wall provides missile protection for the door at el. 441 ft 0 in. on column line 17. Although the trays are above the door level and do not require missile protection provided by the 10 ft 0 in. high wall, the protection is provided, as shown in Figure 3.5-48.

g. The 18 in. CW piping used to provide service water return flow to the CW basin following a tornado has been analyzed to withstand the effects of all postulated tornado missiles, assuming that it is embedded in soil with the surface of the soil flush with the top of the pipe.

h. The tower makeup water (TMU) pipe lines and electrical lines between the TMU pump house and the SW pump houses are located below grade and are protected from external missiles by sufficient Quality Class I earth cover.

i. Portions of the following underground and aboveground piping associated with the diesel oil system are safety related. However, tornado missile protection is not provided to that piping. In the event of damage to the fill and vent connections due to tornado missiles, there are tank pump out connections and unused flanged connections on the storage tank which can be used as fill and vent openings.

1. Diesel oil day tank overflow and drain to storage tanks,
2. Diesel oil storage tank fill and vent lines, and
3. Filter-polisher unit recirculation piping.

3.5.3 BARRIER DESIGN

The barrier design objectives emphasize missile containment and structural integrity without secondary missile generation.

The overall response of barriers subject to impact are investigated by the use of general energy equations given in Reference 3.5-9. On determination of penetration depth and duration of impact, an effective dynamic force is computed. The additional calculation of the natural period of the target structure and the selection of a ductility ratio facilitates the determination of the required structural resistance. In this manner, missile impact is translated to an equivalent static load in an effort to quantify bending moments and shear. The detailed method used for predicting the overall response of missile barriers, including the forcing function method of determining ductility in structural elements and the basis for the ductility ratios used in the calculations, is provided in Appendix C of Reference 3.5-13 that was approved by the NRC.

3.5.3.1 Concrete Barriers

Concrete missile barriers are designed in accordance with penetration equations such as the modified Petry equation (Reference 3.5-2), the Ballistic Research Laboratory formula (Reference 3.5-1), or the modified NDRC formula (Reference 3.5-14). In all cases, except for barriers exposed to turbine missiles, a minimum concrete thickness of 2.2 times the penetration thickness determined for an infinitely thick slab is provided to prevent perforation, spalling, or scabbing. For discussion of turbine-generated missiles, see Section 3.5.1.3.

3.5.3.2 Steel Barriers

The Ballistic Research Laboratories Formula (Reference 3.5-1) is used to determine penetration depths of missiles into steel barriers.

3.5.3.3 Earth Barriers

When the protective barrier is of earthen origin, the soil penetration studies are based on alternate techniques. Buried safety-related piping and electrical systems required for a safe shutdown are ensured adequate protection from tornado-generated missiles. The original embedment depth of 5 ft was calculated to provide acceptable protection for the original design-basis tornado/missile parameters. The current design-basis tornado/missile parameters are now less severe and are used for any required evaluations for protection from postulated missiles. Based on the specific circumstances, the required embedment may be less than the original 5 ft.

3.5.3.4 Applications

Examples of barrier design are as follows:

Steel covers for manholes containing cabling for safety-related equipment required for safe shutdown are designed to withstand tornado-generated missile impact and associated wind pressure. These steel plates are designed using conventional elastic analysis and design methods for determining stress and strain. The design uses two plates of ASTM A 514 steel plate to prevent penetration and blowout.

The reactor building vehicle air lock (railroad bay) exterior doors and the SW pump house exterior equipment doors are designed and certified by the manufacturer to withstand the effects of tornado-generated exterior missiles as described in Section 3.5.1.4.

All other doors in Seismic Category I and safety-related structures are not designed to withstand the effects of the missiles described in Section 3.5.1. These doors are backed up, wherever missile protection is required, with reinforced-concrete walls forming a labyrinth behind the door. Similarly, louvers in exterior walls, which are vulnerable to missile penetration, are backed up by reinforced-concrete plenums or walls.

Based on the selection and description of missiles cited in Section 3.5.1, the interaction of missiles with structural elements is determined and the results are given in Section 3.5.1.4.1. The tabulations assume the missiles to impact at the most vulnerable point of a structure or component (e.g., at the center of a slab).

The reactor protection system motor generator sets flywheels located in the critical dc switchgear rooms at el. 467 ft 0 in. in the radwaste building were analyzed and determined to be credible missile sources, with the potential consequences affecting the safe shutdown of the

plant. Barriers were constructed around these flywheels of steel and aluminum honeycomb material, which were designed to contain the credible missiles (see Section 3.5.1.1.5).

The SW piping between the SW pump houses, the reactor building, and the diesel generator building is provided with sufficient cover for protection from tornado-generated missiles (see Section 3.5.3.3). The SW piping exits the pump houses at a centerline el. of 435 ft 3 in. and immediately turns down at a 45 degree angle to el. 432 ft, where the piping is routed to the reactor building in high relative density Quality Class I backfill. Grade level is at 440 ft 6 in., providing an embedment depth of over 7 ft from the top of the pipe. Where the pipe exits the pump houses, a 1.5-in. asphaltic concrete road with a 6-in. base coarse and 2-in. leveling coarse bed provides additional protection from tornado-generated missiles. Additionally, the two SW loops are separated by at least 20 ft to preclude loss of redundancy.

The tower makeup water piping to the river is embedded in sufficient Quality Class I backfill for protection of tornado-generated missiles (see Section 3.5.3.3).

The control room remote air intake structure piping is embedded a minimum of 5 ft for protection from tornado-generated missiles. The remote air intake structures are also missile-hardened.

3.5.4 REFERENCES

3.5-1 Gwaltney, R. C., "Missile Generation and Protection in Light Water Cooled Power Reactor Plant," Oak Ridge National Laboratory.

3.5-2 Amerikan, A., "Design of Protective Structures," Bureau of Yards and Docks No. NAVDOCKS P-51, 1950.

3.5-3 Cottrell, W. B., Savolainen, A. W., U.S. Reactor Containment Technology, Oak Ridge National Laboratory and Bechtel Corporation, August 1965.

3.5-4 Langley, D. K., Robare, D. J., Analysis of Recirculation Pump under Accident Conditions, Rev. 2, General Electric Company, March 30, 1979. Transmittal letter, from D. J. Robare, G. E., to D. B. Vassallo, NRC, March 30, 1979.

3.5-5 Regulatory Guide 1.115, Rev. 0, "Protection Against Low Trajectory Turbine Missiles."

3.5-6 CT-24022, Rev. 0, December 1978, Westinghouse Turbine Missile Report (HP 296/LP 281).*

3.5-7 Bush, S. H., Probability of Damage to Nuclear Components Due to Turbine Failure, Nuclear Regulatory Commission, Washington D.C., November 1972.

3.5-8 Bates and Swanson, "Tornado Design Considerations for Nuclear Power Plants," American Nuclear Society, November 1967.

3.5-9 Biggs, J. M., Introduction to Structural Dynamics, McGraw Hill, New York, 1964, Chapter 2.

3.5-10 Air Force Design Manual, "Principles and Practices for Design of Structures," AFSNC-TDR-62-138, Chapter 7, December 1962.

3.5-11 Regulatory Guide 1.14, Rev. 1, "Reactor Coolant Pump Flywheel Integrity," August 1975.

3.5-12 Miller, D. R., and Williams, W. A., Tornado Protection for the Spent Fuel Pool, General Electric Company, APED-5696, November 1968.

3.5-13 Burns and Roe, Inc., "Protection Against Pipe Breaks Outside Containment," Hempstead, New York, Report No. WPPSS-74-2-R3, April 1974.

3.5-14 Kennedy, R. P., "A Review of Procedures for the Analysis and Design of Concrete Structures to Resist Missile Impact Effects," Nuclear and Systems Sciences Group, Holmes and Narver, Inc., September 1975.

3.5-15 "Analysis of the Probability of the Generation and Strike of Missiles from a Nuclear Turbine," Westinghouse Electric Corporation Steam Turbine Division Engineering, March 1974.

3.5-16 NUREG-0800, NRC Standard Review Plan, Section 3.5.1.6, July 1981.

3.5-17 Policy, Technical, and Licensing Issues Pertaining to Evolutionary and Advanced Light-Water Reactor (ALWR) Designs, SECY-93-087.

* Applicable for original HPT and LPT Rotors, not the replacement Fully Integral (FI) LPT rotors. Superseded by 3.5-27.

3.5-18 Seattle Sectional Aeronautical Chart, 54th Edition, U.S. Department of Commerce, National Oceanic and Atmospheric Administration, National Ocean Service, Washington D.C., January 1, 1998.

3.5-19 Lowry, P. P., SAIC, personnel communication, Contact with Local Organizations to Support WNP-2 SAR Chapter 1 (Memo 001ppl.98 to WNP-2, Safety Analysis Report File, April 1, 1998), Science Applications International Corporation, Richland, Washington.

3.5-20 Kimura, C. Y., C. T. Bennett, G. M. Sandquist, and S. Smith, Aircraft Accident Data Development for Aircraft Risk Evaluation to Ground Facilities through the Use of a G.I.S., UCRL-JC-118793, Lawrence Livermore National Laboratory, Livermore, California, 1995.

3.5-21 CT-24076, Rev. 1, July 1980. Westinghouse "Methodology for Calculating the Probability of a Missile Generation from Rupture of a Low Pressure Turbine Disc." *

3.5-22 CT-24896, Rev. 0, December 1980. Westinghouse "Turbine Missile Report," (HP296/LP281)."*

3.5-23 CT-24870, Rev. 1, March 1981. Westinghouse "Turbine Missile Report, Results of Probability Analysis of disc Rupture and Missile Generation."*

3.5-24 "Cracking in Low Pressure Turbine Discs," IE Information Notice No. 79-37, letter from R. J. Engelken, NRC, to N. O. Strand, WPPSS, December 28, 1979.*

3.5-25 "Structural Analysis and Design of Nuclear Plant Facilities," Chapter 6 (Design Against Impulse and Impact Loads) ASCE Manuals and Reports on Engineering Practice No. 58, 1980.*

3.5-26 MSTG-1-P, Westinghouse Final Report for NRC Use, "Criteria for Low Pressure Nuclear Turbine Disc Inspection," June 1981.

3.5-27 WSTG-4NP, October 1984. Westinghouse Report Submitted to the NRC, "Analysis of the Probability of the Generation of Missiles from Fully Integral Nuclear Low Pressure Rotors."

* Applicable for original HPT and LPT Rotors, not the replacement FI LPT rotors. Superseded by Reference 3.5-27.

3.5-28 WESS-90-008, June 26, 1990. Westinghouse Letter with FI Rotor Missile Analysis Information with NRC's SER response.

3.5-29 Westinghouse Letter, May 4, 1991, "Requested Information on Turbine Missile Probabilities" with Fully Integral Rotor Overspeed Analysis Summary.

3.5-30 WCAP-11525, June 1987. Westinghouse "Probabilistic Evaluation of Reduction in Turbine Valve Test Frequency."

3.5-31 WCAP-14732, Revision 1, June 1997. Westinghouse "Probabilistic Analysis of Reduction in Turbine Valve Test Frequency for Nuclear Plants with Westinghouse BB-296 Turbines with Steam Chests."

3.5-32 ME-02-06-16, Revision 1, December 2007. DEH/Pressure Control Upgrade Frequency.

Table 3.5-1

Systems Description Outside Containment

Systems Available for a Safe Shutdown	Function	Section	Figures	Seismic/Quality Class
RCIC	Maintain RPV water inventory	5.4.6, 7.4.1.1	3.5-9 through 3.5-14	I/I
HPCS	Maintain RPV water inventory	6.3, 7.3.1.1.1.1	3.5-9 through 3.5-14	I/I
SW	Heat rejection	7.3.1.1.6	3.5-9 through 3.5-14	I/I
RHR A B C	Maintain water inventory and decay heat removal	5.2, 7.3.1.1.1.4, 6.3, 5.4.7	3.5-1 through 3.5-8	I/I
CRD	Reactivity control	7.7.1.2	3.5-15	I/I
RFW	Maintain RPV water inventory	5.4.9	3.5-9 through 3.5-14	--
LPCS	Maintain RPV water inventory	6.3, 7.3.1.1.1.3	3.5-1 through 3.5-8	I/I

Note: Identification of missiles to be protected against, their sources, and bases for selection are discussed in Section 3.5.1.1.3. The ability of the structures, systems, and components to withstand the effects of selected internally generated missiles is discussed in Section 3.5.1.1.2.

Table 3.5-2

Internally Generated Missiles Outside Containment

Missile	Equipment Number	Description	Seismic/ Quality Class	Resolution Code Notes
F-7	RRA-FN-6	RCIC pump room fan coil fan	I/I	(a)
F-9	RRA-FN-2	MS fan coil fan	I/I	(a)
F-11	RRA-FN-7	RR lock fan coil fan	1M/II+	(b)
F-33	REA-FN-2A	Exhaust fan	1M/II+	(b)
F-35	REA-FN-2B	Exhaust fan	1M/II+	(b)
F-37	REA-FN-1A	Exhaust fan	1M/II+	(b)
F-39	REA-FN-1B	Exhaust fan	1M/II+	(b)
F-41	ROA-FN-1A	Supply fan	1M/II+	(b)
F-43	ROA-FN-1B	Supply fan	1M/II+	(b)
F-57	RRA-FN-3	RHR pump room fan coil fan	I/I	(b)
F-59	REA-FN-15	Exhaust fan	1M/II+	(b)
F-61	RRA-FC-19	FPC heat exchanger and pump room cooler	I/I	(b)
F-62	RRA-FC-20	FPC heat exchanger and pump room cooler	I/I	(b)
P-1	LPCS-P-2	LPCS water leg pump	I/I	(d)
P-3	HPCS-P-3	HPCS water leg pump	I/I	(d)
P-5	CRD-P-1A	CRD pump C12-C001A	1M/II+	(d)
P-6	CRD-P-1B	CRD pump C12-C001B	1M/II+	(d)

Table 3.5-2

Internally Generated Missiles
Outside Containment (Continued)

Missile	Equipment Number	Description	Seismic/ Quality Class	Resolution Code Notes
P-7	RHR-P-3	RHR water leg pump	I/I	(d)
P-9	COND-P-3	Reactor building condensate supply pump	1M/II+	(d)
P-10	RCIC-P-4	RCIC condensate pump	I/I	(d)
P-11	RCIC-P-2	RCIC vacuum pump	I/I	(d)
P-12	RCIC-DT-1	RCIC turbine drive	I/I	(d)
P-13	RCIC-P-1	RCIC pump	I/I	(d)
P-14	COND-P-4	Radwaste building condensate supply pump	1M/II+	(c)
P-15	COND-P-5	Condensate filter demineralizer backwash pump	1M/II+	(c)
P-16	RCIC-P-3	RCIC water leg pump	I/I	(d)
P-17	FPC-P-3	Suppression pool cleanup pump	1M/II+	(b)
P-18	RHR-P-2A	RHR pump	I/I	(b)
P-19	RHR-P-2B	RHR pump	I/I	(b)
P-20	RWCU-P-1A	Cleanup circulation pump	1M/II+	(b)
P-21	RWCU-P-1B	Cleanup circulation pump	1M/II+	(b)
P-24	RCC-P-1A	RBCC water pump	1M/II+	(b)
P-25	RCC-P-1B	RBCC water pump	1M/II+	(b)
P-26	RCC-P-1C	RBCC water pump	1M/II+	(b)
P-27	RCC-P-2	RBCC chemical metering pump	1M/II+	(b)

Table 3.5-2

Internally Generated Missiles
Outside Containment (Continued)

Missile	Equipment Number	Description	Seismic/ Quality Class	Resolution Code Notes
P-28	FPC-P-1A	Fuel pool cooling pump	I/(II/I)	(b) (g)
P-29	FPC-P-1B	Fuel pool cooling pump	I/(II/I)	(b) (g)
P-30	PWC-P-4A	Potable water pump	1M/II+	(b)
P-31	PWC-P-4B	Potable water pump	1M/II+	(b)
P-32	EDR-P-5A EDR-P-5B	Reactor building equipment drain sump pumps	1M/II+	(b)
P-33	FDR-P-1A	Reactor building floor drain sump pump	1M/II+	(b)
P-34	FDR-P-1B	Reactor building floor drain sump pump	1M/II+	(b)
P-35	FDR-P-2	Reactor building floor drain sump pump	1M/II+	(b)
P-36	FDR-P-3	Reactor building floor drain sump pump	1M/II+	(b)
P-37	FDR-P-4A	Reactor building drywell floor sump pump	1M/II+	(b)
P-38	FDR-P-4B	Reactor building drywell floor sump pump	1M/II+	(b)
P-39	ROA-P-1A	Air washer pump	1M/II+	(b)
P-40	ROA-P-1B	Air washer pump	1M/II+	(b)
R-1	RPS-MG-1	RPS motor generator set	II/II	(e)
R-2	RPS-MG-2	RPS motor generator set	II/II	(e)
F-71	RRA-FN-8	MS tunnel fan coil fan	I/I	(b)

Table 3.5-2

Internally Generated Missiles
Outside Containment (Continued)

Missile	Equipment Number	Description	Seismic/ Quality Class	Resolution Code Notes
F-72	RRA-FN-9	MS tunnel fan coil fan	I/I	(b)
R-5	DSA-C-1C	Starting air compressor HPCS diesel generator	I/I	(b)
R-6	DSA-C-2C	Starting air compressor HPCS diesel generator	I/I	(b)
R-7	DSA-C-1A1	Starting air compressor diesel generator A1	I/I	(f)
R-8	DSA-C-1A2	Starting air compressor diesel generator A2	I/I	(f)
R-9	DSA-C-1B1	Starting air compressor diesel generator B1	I/I	(f)
R-10	DSA-C-1B2	Starting air compressor diesel generator B2	I/I	(f)
R-11	DLO-P-3A1	Motor driven lube oil pump diesel generator A1	I/I	(b)
R-12	DLO-P-3A2	Motor driven lube oil pump diesel generator A2	I/I	(b)
R-13	DLO-P-3B1	Motor driven lube oil pump diesel generator B1	I/I	(b)
R-14	DLO-P-3B2	Motor driven lube oil pump diesel generator B2	I/I	(b)
R-15	DO-P-3A1	Motor driven lube oil pump	I/I	(b)
R-16	DO-P-3A2	Motor driven lube oil pump	I/I	(b)
R-17	DO-P-3B1	Motor driven lube oil pump	I/I	(b)
R-18	DO-P-3B2	Motor driven lube oil pump	I/I	(b)
R-19	DO-P-6	dc motor driven HPCS fuel pump	I/I	(b)

Table 3.5-2

Internally Generated Missiles
Outside Containment (Continued)

Missile	Equipment Number	Description	Seismic/ Quality Class	Resolution Code Notes
F-73	DEA-FN-13	Exhaust fan loop A pump room	1M/II+	(b)
F-74	DEA-FN-23	Exhaust fan loop B pump room	1M/II+	(b)
F-75	DEA-FN-33	Exhaust fan HPCS oil pump room	1M/II+	(b)
F-76	DEA-FN-32	Exhaust fan day tank room	1M/II+	(b)
F-77	DEA-FN-12	Exhaust fan day tank room	1M/II+	(b)
F-78	DEA-FN-22	Exhaust fan day tank room	1M/II+	(b)
F-79	DRA-FN-34	Fire deluge equipment room recirculation fan	1M/II+	(b)
F-80	DRA-EUH-11	Electric unit heater loop A oil pump room	1M/II+	(b)
F-81	DRA-EUH-21	Electric unit heater loop B oil pump room	1M/II+	(b)
F-82	DRA-EUH-31	Electric unit heater HPCS oil pump room	1M/II+	(b)
F-83	DRA-EUH-32	Electric unit heater fire deluge equipment room	1M/II+	(b)
F-84	DRA-EUH-33	Electric unit heater fire deluge equipment room	1M/II+	(b)
F-85	DMA-AH-32	Air handling HPCS diesel generator room	I/I	(b)
F-86	DMA-AH-12	Air handling Division 1 diesel generator room	I/I	(b)
F-87	DMA-AH-22	Air handling Division 2 diesel generator room	I/I	(b)
F-88	DEA-FN-11	Exhaust fan Division 1 diesel generator room	I/I	(b)

Table 3.5-2

Internally Generated Missiles
Outside Containment (Continued)

Missile	Equipment Number	Description	Seismic/ Quality Class	Resolution Code Notes
F-89	DEA-FN-21	Exhaust fan Division 2 diesel generator room	I/I	(b)
F-90	DEA-FN-31	Exhaust fan HPCS diesel generator room	I/I	(b)

RESOLUTION CODE NOTES:

[a] These postulated missiles originate from air conditioning fan coil units. These fan coil units are contained in housings capable of containing any potential fan missile. The air outlets have grating installed to prevent potential missiles from exiting via this route. The air inlets are into the fan impeller eye and thus the fan inlets are not a missile exit path. Missiles originating from this equipment cannot get beyond the protective housing.

[b] These postulated missiles were determined to be credible. A safe shutdown analysis was performed, which determined that the failure of all equipment in the missile path envelope would have no effect on the ability of the plant to safely shut down in the event of an accident.

[c] These postulated missiles are impeller fragments originating from the radwaste building condensate supply pump and the condensate filter demineralizer backwater pump. These missiles were assumed to be credible. A safe shutdown analysis was performed, which determined that the failure of all equipment in the missile path would have no effect on the ability of the plant to shut down in the event of an accident, with the exception of impacts on one 20-in. standby service water pipe with standard (3/8-in.) wall thickness. A worst case missile, which would transmit the maximum energy to a point of contact with the nearest standby service water pipe was analyzed.

This worst-case missile and impact could not penetrate the standby service water pipes. The target pipe would sustain acceptable deformation in which the pressure integrity of the target pipe is not affected.

This analysis demonstrated that these pumps could not generate a missile capable of compromising the safe shutdown functions of the service water pipes.

Table 3.5-2

Internally Generated Missiles
Outside Containment (Continued)

Resolution Code Notes (Continued):

[d] These postulated missiles are pump impeller and turbine blade fragments. Analysis has shown that the impeller and turbine casings have sufficient thickness to contain each postulated missile. Postulated missiles originating from this equipment cannot be ejected beyond the protective casings.

[e] These postulated missiles are flywheel fragments from the RPS motor-generator sets. A safe shutdown analysis was performed which showed critical Division 1 and 2 electrical power and control cables were in the potential missile path that were required to safely shut down the plant in the event of an accident. Missile barriers were designed and installed around both motor-generator flywheels. These barriers ensure that potential missiles originating from the motor generators will have no effect on the ability of the plant to shut down in the event of an accident.

[f] These postulated missiles originate from the air compressors that provide starting air for the diesel generator sets. These four compressors are of the reciprocating three-cylinder piston type. The three cylinder heads cover the upper portion of the crankshaft and preclude any missile exiting the compressor from the upper half of the crankcase. Credible missiles were postulated to exit out the bottom half of the crankcase. A safe shutdown analysis was performed, which determined that the failure of all equipment in the missile path envelope would have no effect on the ability of the plant to safely shut down in the event of an accident.

[g] Pumps purchased or installed prior to Jan 1, 1980 shall be Quality Class II. Pumps purchased or installed after Jan 1, 1980 shall be Quality Class 1.

Table 3.5-3

Plant Systems Protected By Missile Barriers

The missile barrier for RPS motor-generator set 1, located in the Division 1 essential switchgear room in the radwaste building, el. 467 ft 0 in., protects electric power and control cables servicing the following equipment:

Power distribution panel DP-S1-1A

Power panel PP-7A-F

Inverter IN-3

Motor control center MC-S1-1D

Motor control center MC-7A

Power panel PP-7A

24 V dc power supply system DP-SO-A

The missile barrier for RPS motor-generator set 2, located in the Division 2 essential switchgear room in the radwaste building, el. 467 ft 0 in., protects electric power and control cables servicing the following equipment:

24 V dc power supply system PP-DP-SO-8

125 V dc power distribution panel DP-S1-2D

125 V dc power distribution panel DP-S1-2E

125 V dc power distribution panel DP-S1-2A

125 V dc power distribution panel MC-S1-2D

Motor control center MC-8A

Motor control center MC-8F

Instrument and control power panel PP-8A-F

Instrument and control power panel PP-8A-E

Motor control center MC-8B

Table 3.5-4

Systems Description Inside Containment

Systems Available for a Safe Shutdown	Function	Section	Figures	Seismic/Quality Class
RPS	Reactor protection	7.2.1.1, 4.6	3.5-29	I/I
CRD	Reactivity control	7.7.1.2	*3.5-19* through *3.5-22*, *3.5-25*, *3.5-27*, *3.5-28*	I/I
Inboard isolation valves	Containment isolation	5.4.5, 6.2.4	--	I/I
HPCS	Maintain RPV water inventory	7.3.1.1.1.1, 6.3	*3.5-16* through *3.5-18*, *3.5-20*, *3.5-25*, *3.5-27*, 3.5-29, 3.5-31	I/I
LPCS	Maintain RPV water inventory	7.3.1.1.1.3, 6.3	*3.5-16* through *3.5-19*, *3.5-26*, *3.5-28*, 3.5-29, 3.5-31	I/I
ADS	Depressurize RPV	5.2, 7.3.1.1.1.2	*3.5-17*, 3.5-29	I/I
RHR A B C	Maintain RPV water inventory and decay, heat removal	6.3, 5.4.7, 7.3.1.1.1.4	*3.5-16* through *3.5-18*, *3.5-20* *3.5-26*	I/I
Containment	Containment integrity	3.8.2	*3.5-1* through 3.5-50, 3.8-49	I/I

Note: Identification of missiles to be protected against, their sources, and bases for selection are discussed in Section 3.5.1.2.3. The ability of the structures, systems, and components to withstand the effects of selected internally generated missiles is discussed in Section 3.5.1.2.2.

Table 3.5-6

Location of and Missile Protection
Provided for Fresh Air Intakes (FAI) and Exhausts (EXH)

Building Location	Exterior Walls: Opening Type	Exterior Walls: Size	Opening Centerline Location: Elevation	Opening Centerline Location: Plan	Figure	Protection
Reactor						
South	FAI	6 ft 2-7/8 in. W x 17 ft 8 in. H	581 ft 8 in.	5 ft 8 in. west of col. line 6	3.5-36 3.5-37	Shielding wall
North	EXH	72 in. diameter	595 ft 8 in.	6 ft 0 in. west of col. line 6	3.5-36 3.5-38	Shielding wall
Radwaste and control						
West	FAI	4 ft 0 in. x 4 ft 0 in.	526 ft 6 in.	4 ft 6 in. north of col. line K.1	3.5-45 3.5-49 3.5-50	Shielding wall, slab and hood
Roof	EXH	3 ft 0 in. x 3 ft 0 in.	546 ft 0 in.	5 ft 0 in. north of col. line K.1 4 ft 0 in. east of col. line 15.1	3.5-39 3.5-40	Concrete shielding hood
Diesel Generator						
South	FAI	10 ft 11 in. W x 12 ft 8 in. H	449 ft 4 in.	5 ft 7.5 in. east of col. line 9.4	3.5-41 3.5-42	Shielding wall
South	FAI	10 ft 11 in. W x 12 ft 8 in. H	449 ft 4 in.	7 ft 5.5 in. east of col. line 7.4	3.5-41 3.5-42	Shielding wall
South	FAI	10 ft 11 in. W x 12 ft 8 in. H	449 ft 4 in.	6 ft 5.5 in. west of col. line 3.8	3.5-41 3.5-42	Shielding wall
South	EXH	36 in. diameter	480 ft 2.5 in.	3 ft 9 in. east of col. line 8.4	3.5-43 3.5-42	Penthouse
South	EXH	36 in. diameter	480 ft 2.5 in.	3 ft 9 in. west of col. line 7.4	3.5-42 3.5-43	Penthouse

Table 3.5-6

Location of and Missile Protection
Provided for Fresh Air Intakes (FAI)
and Exhausts (EXH) (Continued)

Building Location	Exterior Walls: Opening Type	Exterior Walls: Size	Opening Centerline Location: Elevation	Opening Centerline Location: Plan	Figure	Protection
Diesel Generator (Continued)						
South	EXH	36 in. diameter	480 ft 2.5 in.	3 ft 9 in. east of col. line 6.6	3.5-42 3.5-43	Penthouse
South	EXH	36 in. diameter	480 ft 2.5 in.	3 ft 9 in. west of col. line 5.5	3.5-42 3.5-43	Penthouse
South	EXH	36 in. diameter	480 ft 2.5 in.	2 ft 9 in. east of col. line 5.5	3.5-42 3.5-43	Penthouse
East	EXH	1 ft 0.5 in. x 1 ft 0.5 in.	452 ft 6 in.	12 ft 8 in. south of col. line P.1	3.5-44 3.5-42	Shielding beam MB5
East	FAI	1 ft 0.5 in. x 1 ft 0.5 in.	452 ft 6 in.	3 ft 2 in. north of col. line Q	3.5-44 3.5-42	Shielding beam MB5
East	EXH	1 ft 0.5 in. x 1 ft 0.5 in.	452 ft 6 in.	12 ft 10 in. south of col. line Q	3.5-44 3.5-42	Shielding beam MB5
East	FAI	1 ft 0.5 in. x 1 ft 0.5 in.	452 ft 6 in.	8 ft 2 in. north of col. line R	3.5-44 3.5-42	Shielding beam MB5
East	EXH	1 ft 0.5 in. x 1 ft 0.5 in.	452 ft 6 in.	7 ft 10 in. south of col. line R	3.5-44 3.5-42	Shielding beam MB5
East	FAI	1 ft 0.5 in. x 1 ft 0.5 in.	452 ft 6 in.	10 in. north of col. line P.1	3.5-44 3.5-42	Shielding beam MB5

Table 3.5-6

Location of and Missile Protection
Provided for Fresh Air Intakes (FAI)
and Exhausts (EXH) (Continued)

Building Location	Exterior Walls: Opening Type	Exterior Walls: Size	Opening Centerline Location: Elevation	Opening Centerline Location: Plan	Figure	Protection
SSWPH[a] 1A						
East	FAI	2 ft 6 in. x 2 ft 6 in.	437 ft 6 in.	3 ft 3 in. south of col. line A	3.5-46	Wall and floor
West	EXH	3 ft 5 in. x 3 ft 5 in.	451 ft 11 in.	3 ft 4.5 in. north of col. line E	3.5-46 3.5-47	Wall
SSWPH[a] 1B						
South	FAI	2 ft 6 in. x 2 ft 6 in.	437 ft 6 in.	3 ft 3 in. west of col. line A	3.5-46	Wall and floor
North	EXH	3 ft 5 in. x 3 ft 5 in.	451 ft 11 in.	3 ft 4.5 in. east of col. line E	3.5-46 3.5-47	Wall
FAIS[b]						
Roof	FAI	3 ft 3 in. x 3 ft 5 in.	441 ft 9 in.	Centerline of structure	3.8-49	Slabs, walls

[a] Standby service water pump house
[b] Fresh air intake structures

NOTES:
1. FOR NOTES SEE DWGS S900, S909 & S917.
2. ALL WORK ON THIS DWG IS PER CONTRACT 206 UNLESS OTHERWISE NOTED.

SECTION 209-209
SECTION 1173-1173
DETAIL II
SECTION 1483-1483
SECTION 1865-1865
SECTION 300-300
SECTION 298-298
SECTION 297-297
SECTION 807-807
SECTION 8087 - 8087
SECTION 8088 - 8088
SECTION 2330-2330
SECTION 210-210
SECTION 211-211
SECTION 302-302
SECTION 2519 - 2519
SECTION 2518 - 2518
PART PLAN BELOW SLAB @ EL. 542'-0"
SECTION 8080 - 8080
SECTION 8081 - 8081
SECTION 8085 - 8085
SECTION 8084-8084
SECTION 8086 - 8086
DETAIL-I

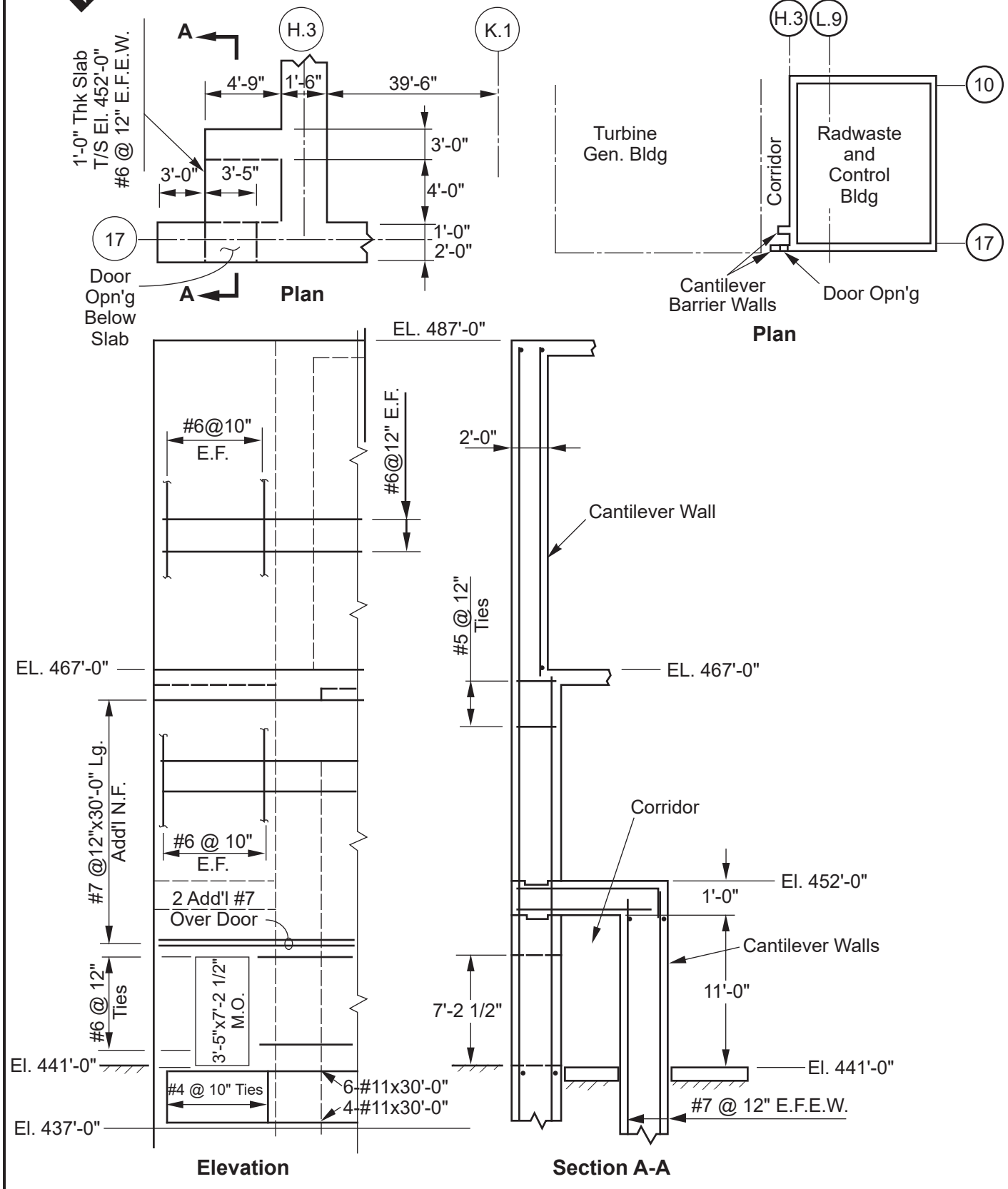

Columbia Generating Station **Final Safety Analysis Report**	**Cantilever Barrier Structure**		
	Draw. No. 910402.24	Rev.	Figure 3.5-48

3.6 PROTECTION AGAINST DYNAMIC EFFECTS ASSOCIATED WITH THE POSTULATED RUPTURE OF PIPING

This section describes the design bases and design measures that are implemented for Columbia Generating Station to ensure that the primary containment vessel and all essential equipment inside and outside primary containment, including components of the reactor coolant pressure boundary (RCPB), have been adequately protected against the effects of blowdown jet and reactive forces, and pipe whip resulting from postulated rupture of piping located either inside or outside of primary containment. Design measures have been implemented to ensure that any such postulated accident does not result in loss of required functions that are necessary to mitigate the consequences of that particular accident and place the reactor in a cold shutdown condition. The implementation of design measures considered a single, random active component failure.

The implementation of criteria for protection of safety-related systems from the effects of pipe rupture as discussed in this section is based not only on analytic evaluations but also on the walkdown of plant systems, equipment, and components which were performed. Verification of the protection of safety-related systems, equipment, and components from the effects of pipe rupture was provided by means of this final walkdown prior to fuel load.

The power uprate and Maximum Extended Load Line Limit Analysis (MELLLA) projects resulted in changes to the input parameters associated with the pipe break analysis. The evaluation of these changes (see Reference 3.6-10 and 3.6-24) supports the conclusion that the analysis and design presented in this section bounds the power uprate and MELLLA conditions.

3.6.1 PLANT DESIGN FOR PROTECTION AGAINST POSTULATED PIPING FAILURES IN FLUID SYSTEMS OUTSIDE PRIMARY CONTAINMENT

The analysis of piping systems is performed in accordance with Branch Technical Position (BTP) ASB 3-1, Rev. 1, 1981. Systems or components important to plant safety or shutdown, which are located approximate to high- or moderate-energy piping systems and are susceptible to the consequences of failures of these piping systems, were considered during the evaluations described below. The identification is related to the predetermined piping failure locations as described in Section 3.6.2.

A listing of systems containing high- and moderate-energy lines is provided in Tables 3.6-1 and 3.6-2, and the physical arrangements of piping systems are shown in Figures 3.5-10, 3.5-11, and Figures 3.6-1 through 3.6-20B.

The continued habitability of the control room following a postulated fluid system piping failure is addressed in Section 3.6.1.12.

The results of failure mode and effect analyses are provided in accordance with BTP ASB 3-1 to verify that the consequences of failures of high- and moderate-energy lines do not affect the ability to safely shut the plant down. The analyses consider a single active component failure occurring in a required system concurrently with the postulated event. The results of these analyses are presented in Sections 3.6.1.11 and 3.6.1.18.

3.6.1.1 Energy Classification of Fluid Piping Systems Outside Containment

3.6.1.1.1 High and Moderate Energy Criteria

Definitions of high- and moderate-energy fluid piping systems are given in Section 3.6.2.1. Fluid systems which could be classified as high energy during operation, but are required to function only to mitigate the consequences of a loss-of-coolant accident (LOCA), are considered moderate energy as ruptures of these systems during operation would imply a second passive component failure.

Specifically, the low-pressure coolant injection (LPCI) modes of the residual heat removal (RHR) system, the low-pressure core spray (LPCS) system, the high-pressure core spray (HPCS) system, the suppression pool cooling modes of the RHR system and the standby liquid control (SLC) system are considered moderate energy.

Fluid piping systems which are classified as high energy by Section 3.6.2.1, whose temperature does not exceed 200°F, and whose pressure is derived solely by a centrifugal pump instead of a fluid reservoir, are considered moderate energy systems. In these cases the system is depressurized as a subcooled liquid after the break and the pump energy is simply converted to velocity head. The jet force induced by the pump at the break plane is insufficient to cause pipe whip and thus these cases are properly considered as moderate energy systems.

According to the criteria established in Section 3.6.2.1, the shutdown cooling mode of the RHR and the normally unpressurized portions of the reactor core isolation cooling (RCIC) system, are considered moderate energy.

3.6.1.1.2 Systems Subject to Analysis

According to the criteria established in Section 3.6.1.1.1, the high-energy fluid piping systems subject to analysis are listed in Table 3.6-1. The moderate-energy fluid piping systems subject to analysis are listed in Table 3.6-2.

3.6.1.2 Criteria for Establishing the Postulated Design Basis Break Locations

The criteria that define the postulated design basis break locations in high- and moderate-energy fluid piping systems are presented in Sections 3.6.2.1.1 through 3.6.2.1.3.

3.6.1.3 Criteria for Establishing the Postulated Design Basis Break Orientations

The criteria that define the postulated design basis break orientations in high- and moderate-energy fluid piping systems are presented in Section 3.6.2.1.4.

3.6.1.4 Summary of Dynamic Analysis of Category I Piping and Supports

3.6.1.4.1 Design Basis Breaks for the Dynamic Analysis Outside Primary Containment

Table 3.6-3 lists the number of design basis breaks on which the dynamic analysis is based as well as the particular piping system involved, the diameter of the pipe, the plan figure showing the piping system, the maximum blowdown thrust or the thrust versus time figure, and the room or area containing the postulated break.

3.6.1.4.2 Diagrams of Mathematical Models Used in the Dynamic Analysis

3.6.1.4.2.1 Models Used for Pipe Whip Restraint Design. A description of the mathematical models used to design the pipe whip restraints is presented in Section 3.6.2.2.2.

3.6.1.4.2.2 Models Used for Structural Analysis. Descriptions of the mathematical models and procedures used to ensure adequacy of Seismic Category I structures are presented in Sections 3.6.1.6 through 3.6.1.10.

3.6.1.4.2.3 Models Used to Represent Jet Stream Dynamics. Descriptions of the procedure used to model the dynamics of a jet stream caused by a postulated rupture of a high-energy fluid piping system are presented in Section 3.6.2.3.1.

3.6.1.4.3 Effect of Postulated Fluid Piping System Ruptures on Structures, Systems, or Components Necessary for Safe Reactor Operation

A discussion is presented in Section 3.6.1.11 concerning the effects of postulated high- and moderate-energy fluid piping system failures on structures, systems, and components necessary to shut down and maintain the reactor in a cold shutdown condition.

3.6.1.5 Methods to Protect Structures, Systems, or Components Necessary for Safe Reactor Operation From the Dynamic Effects of Postulated Fluid Piping System Ruptures

3.6.1.5.1 Pipe Whip Restraints

A description of the method used to design pipe whip restraints is presented in Section 3.6.2.3.3.

3.6.1.5.2 Protective Provisions for Structures, Systems, and Components Important to Safety

Separation of redundant features is the basic design criteria utilized to protect structures, systems, or components important to safety from the dynamic effects of postulated pipe ruptures including pipe whip impact and blowdown jet impingement.

The emergency core cooling pumps and the RCIC pump are located in individual rooms. The CRD/Condensate pumps are also located in an individual room, but the equipment drain sump located in that room is connected to the RCIC pump room through an unisolable pipe; other rooms that are connected to a common sump are provided with a connecting line isolation valve. In the event of a flood in any pump room, the walls of each room, including penetrations and doors, allow only minimal leakage between rooms and can withstand the dynamic effects of any postulated fluid piping system rupture in their vicinity as well.

The remaining mechanical and electrical equipment, which must function to mitigate the consequences of a postulated fluid piping system rupture outside primary containment, is protected by providing adequate separation of redundant features per the requirements of BTP ASB 3-1, Rev. 1, 1981.

A more detailed discussion of the analysis employed to demonstrate that structures, systems, and components important to safety are adequately protected is provided in Section 3.6.1.11.

3.6.1.5.3 Physical Separation of Systems or Components Important to Safety

Physical separation of systems or components important to safety is provided by maintaining sufficient distance between redundant features, by enclosing high-energy fluid piping systems and systems or components important to safety within protective structures.

3.6.1.5.4 Description, Number, and Location of Pipe Whip Restraints Outside Primary Containment

Typical pipe whip restraints are seen in Figures 3.6-21 and 3.6-22.

A total of 12 restraints are utilized for the main steam and feedwater lines in the main steam tunnel outside of primary containment. These restraints are illustrated in Figure 3.6-24.

3.6.1.6 Procedures to Evaluate the Structural Adequacy of Seismic Category I Structures Under Pipe Break Effects Outside Containment

3.6.1.6.1 General Approach

Structures and structural components important to safety are designed with sufficient strength to resist the effects of postulated pipe breaks in high energy fluid piping systems, such as pipe whip and jet impingement. High-energy fluid piping systems are defined in Section 3.6.1.1. Section 3.6.1.6 discusses the effects of postulated pipe breaks on structures and structural components. Environmental effects of postulated pipe breaks are addressed in Sections 3.6.1.13, 3.6.1.15, and 3.11.

The main component effects of a postulated pipe break include the following:

a. Pipe whip with its impacting energy,
b. Jet impingement and accompanying jet reaction, and
c. Pressurization and temperature effects which accompany pipe break.

Pipe whip effects from circumferential breaks are seen in Figure 3.6-25. Jet impingement effects from circumferential breaks and longitudinal splits are seen in Figure 3.6-26. Circumferential breaks and longitudinal splits are defined in Section 3.6.2.1.4.

In making a structural evaluation of the effects of pipe break accidents, the loads resulting from these pipe break accidents are used in combination with other prevailing loads that occur at the time of the break. For load information and combinations see Sections 3.6.1.6.5 and 3.6.1.6.6.

To make a structural evaluation of the effects of a postulated pipe break, the local damage to the structural element is predicted and the overall structural response is assessed. Local damage is the damage done to a structural element in the immediate vicinity of the pipe whip impact or the jet impingement. Overall structural response concerns the overall response of the entire structural element to the effects of a postulated pipe break. In the following discussion, whipping pipe is described as missiles.

3.6.1.6.2 Local Damage Prediction

Local damage prediction due to whip or jet impingement in the immediate vicinity of the impacted area includes estimation of the depth of penetration and whether, in the case of concrete targets, secondary missiles might be generated by spalling. In general, a whipping pipe is a blunt missile and penetration and spalling are not appreciable for the structural component (e.g., walls) thickness of interest. Such a condition is seen in Figure 3.6-25. Jet impingement local damage is not considered significant because the fluid mass does not have the mass concentration of a solid and because of the divergence of a jet which spreads the load

over a wide area (see Figure 3.6-26). Missile penetration is predicted for reinforced-concrete targets and for steel targets.

3.6.1.6.2.1 Reinforced Concrete Targets.

Penetration

The depth to which a rigid missile penetrates a reinforced-concrete target of infinite thickness is estimated by the following Modified Petry Formula (References 3.6-15 and 3.6-17):

$$X = K_p A_p \quad \log_{10}\left(1 + \frac{V_s^2}{215{,}000}\right) \tag{3.6-1}$$

where

X = depth of missile penetration into concrete element of infinite thickness (ft)

K_p = penetration coefficient for reinforced concrete (4.76×10^{-3} ft^3 /lb. for normal reinforced concrete with a crushing strength of 3200 psi and 1.4% of reinforcement. See Reference 3.6-15.)

$$Ap = \frac{W}{A} = \frac{\text{Missile Weight (lb)}}{\text{Projected Frontal Missile Area (ft}^2\text{)}}$$

V_s = striking velocity of missile (ft/sec)

When the element has a finite thickness, the depth of penetration is (References 3.6-15 and 3.6-17):

$$X_1 = \left[1 + e^{-4\frac{(t-2)}{x}}\right] x, (t = 2x) \tag{3.6-2}$$

where

X_1 = depth of penetration of missile into a concrete element of finite thickness (ft)

e = base of Napierian Logarithms

t = thickness of concrete element (ft)

Perforation

The thickness of a concrete element that will be just perforated by a missile is given as (References 3.6-15 and 3.6-17):

$$T = 2X \text{ (ft)} \qquad (3.6\text{-}3)$$

Spalling

Spalling of concrete from the side opposite the impact surface of the structural element may occur even if the missile does not perforate the element. The estimate of the thickness that will just start spalling is given as (Reference 3.6-20):

$$T_s = 2.2X \text{ (ft)} \qquad (3.6\text{-}4)$$

3.6.1.6.2.2 Steel Targets. The Ballistic Research Laboratories formula is used to determine perforation of a steel target. The thickness, T, of a steel target that will be just perforated by a missile is given as (Reference 3.6-17):

$$T^{3/2} = \frac{0.5MV^2}{17{,}400\ K^2 D^{3/2}} \qquad (3.6\text{-}5)$$

where

T = steel wall thickness to just perforate (in.)

M = mass of the missile (weight/g in lb-sec^2/ft)

V = velocity of missile (ft/sec)

K = constant depending on grade of steel and is usually ≅1

D = diameter of missile (in.). For irregularly shaped missiles, an equivalent diameter is used, taken as the diameter of a circle with the same area as the projected frontal area of the irregularly shaped missile

The recommendation in Reference 3.6-13 to increase the perforation thickness, T, obtained by the Ballistic Research Laboratories Formula by 25% to prevent perforation is observed; that is:

$$t_p = 1.25T \qquad (3.6\text{-}6)$$

where

t_p = thickness of steel barrier required to prevent penetration (in.)

3.6.1.6.3 Overall Structural Response

3.6.1.6.3.1 General. In general, pipe break loads are considered in combination with other loads (see Section 3.6.1.6.6). Dead loads, live loads, operating thermal loads, and earthquake loads may or may not be significant compared to the pipe break load, depending on the severity of the pipe break load. Thermal loadings due to pipe break have only skin effect and are not considered.

Pressure loads due to pipe break do not necessarily peak with pipe whip and jet impingement loads; however, in the analysis, they are considered to act simultaneously.

With regard to pipe break, when high energy pipes under pressure fail, a fluid jet is created. The associated jet impingement force on a target as well as the reaction force exerted on the piping by the fluid jet force have a time history qualitatively presented in Figure 3.6-27. This force is conservatively idealized as a step function load. For the fluid forces associated with these pipe failures, see Table 3.6-3.

To obtain a solution for the actual complex system, the structure is idealized by an equivalent single degree of freedom system (see Figure 3.6-28) following the procedures described by J. M. Biggs in Chapter 5 of Reference 3.6-1. The response of this mathematical idealization to a step function load (jet impingement) or to a step function load concurrently with an impact loading (due to whipping pipe) involves an energy transfer from the impacting object to the impacted structure. The following exposition on how this energy transfer is addressed makes use of procedures that have been presented by the Bechtel Corporation in its report on missile impact, Topical Report BC-TOP-9A, Revision 2 (Reference 3.6-13).

3.6.1.6.3.2 Structural Response to Whipping Pipe Missile Impact Load.

Discussion

A method of energy-balance procedures is used to evaluate the structural response when a missile impacts a target. The method utilizes the strain energy of the target at maximum response to counteract the residual kinetic energy of the target or target missile combination that results from the missile impact.

A missile of mass M_m is postulated to strike a spring-backed target mass, M_e, with a velocity, V_s. Since the actual coupled mass during impact varies, an estimated average effective target mass, M_e, is used to evaluate the inertia effects during impact. The impact of the missile is

considered plastic. This assumes that the missile remains in contact with the target after impact.

Velocity After Impact

The velocities of the missile and target after impact are calculated from the following relationships (Reference 3.6-19):

$$V_m = \frac{V_s(M_m - eM_e)}{M_m + M_e} \quad (3.6\text{-}7)$$

$$V_t = \frac{V_s M_m (1 + e)}{M_m + M_e} \quad (3.6\text{-}8)$$

where

V_m = missile velocity after impact (ft/sec)

V_t = target velocity after impact (ft/sec)

V_s = missile striking velocity (obtained by using basic velocity formulas, knowing the initial thrust force, missile mass, and missile travel before impact) (ft/sec)

M_m = mass of missile (lb-sec^2/ft)

M_e = effective mass of target during impact (lb-sec^2/ft)

e = coefficient of restitution

Plastic Impact

In a plastic impact, the coefficient of restitution becomes zero, and the velocity of the missile and target masses become equal following impact. The strain energy, E_s, required to stop the missile/target combination is the summation of the missile mass kinetic energy and the target mass kinetic energy at the end of the impact duration, as follows.

$$E_s = \frac{M_m V_m^2}{2} + \frac{M_e V_T^2}{2} \quad (3.6\text{-}9)$$

From Equations 3.6-7 and 3.6-8:

$$V_m = V_T = \frac{M_m V_s}{M_m + M_e} \tag{3.6-10}$$

Substituting the value for V_m and V_T from Equation 3.6-10 into Equation 3.6-9, the required target strain energy is:

$$E_s = \frac{M_m{}^2 V_s{}^2}{2(M_m + M_e)} \tag{3.6-11}$$

Target Effective Mass

Due to the complexity of missile-target impact, a determination of an effective coupled mass on a continuous time basis by means of a general analytical solution is not available. However, an estimate of the average effective mass can be approximated from the results of impact tests on reinforced-concrete beams (Reference 3.6-10) in which the measured structural response is used to back-calculate the average mass during impact. Based on these data, the following formulas are used for estimating the target effective mass.

For concrete beams:

$$M_e = (D_x + 2T)\frac{B\gamma_c T}{g}, \text{ if } B \leq (D_y + 2T) \tag{3.6-12}$$

$$M_e = (D_x + 2T)(D_y + 2T)\frac{\gamma_c T}{g}, \text{ if } B \geq (D_y + 2T) \tag{3.6-13}$$

For concrete slabs:

$$M_e = (D_x + T)(D_y + T)\frac{\gamma_c T}{g} \tag{3.6-14}$$

For steel beams:

$$M_e = (D_x + 2d)M_x \tag{3.6-15}$$

For steel plates:

$$M_e = D_x D_y \frac{\gamma_s t}{g} \qquad (3.6\text{-}16)$$

where

M_e = average effective mass of target during impact $\frac{(lb - sec^2)}{ft}$

M_x = mass per unit length of steel beam $\frac{(lb - sec^2)}{ft}$

D_x = maximum missile contact dimension in the direction (longitudinal axis for beams or slabs) (ft)

D_y = maximum missile contact dimension in the y direction (transverse to longitudinal axis for beams or slabs) (ft)

T = thickness or depth of concrete element (ft)

t = thickness of steel plate (ft)

d = depth of steel beam (ft)

B = width of concrete beam (not to exceed D + 2T)(ft)

γ_c = weight per unit volume of concrete (lb/ft^3)

γ_s = weight per unit volume of steel (lb/ft^3)

g = acceleration of gravity (32.2 ft/sec^2)

Structural Response by Energy Balance Method

a. General Procedures

The strain energy, E_s, required to stop the target (or missile-target combination) is determined from the relationships in Section 3.6.1.6.3.2.

The resistance-displacement function, R(x), for a concentrated load at the area of impact is determined from the target structure physical configuration and material properties.

The estimated maximum target response is determined by equating the available target strain energy to the required strain energy and solving for the maximum displacement, x_m, (see Figure 3.6-29).

b. Elasto-Plastic Target Response

For elasto-plastic target response with no other concurrent loads acting:

$$R(x) = Kx, (0 < x \leq x_e)$$

$$R(x) = Kx_e = R_m, (x_e < x \leq x_m)$$

where

R = resisting force of target (lb)

x = displacement of target (ft)

k = elastic Spring constant for target (lb/ft)

x_e = yield displacement (ft) (See Tables 3.6-4, 3.6-5, and Figure 3.6-29)

R_m = plastic resistance (lb) (See Tables 3.6-4, 3.6-5, and Figure 3.6-29)

x_m = maximum displacement of target (ft)

then

$$E_s = R_m\left(x_m - \frac{x_e}{2}\right)$$

or

$$x_m = \frac{E_s}{R_m} + \frac{x_e}{2} \qquad (3.6\text{-}17)$$

The required ductility ratio, μ_r, is obtained from Equation 3.6-17 by dividing both sides of the equation by x_e.

$$\mu_r = \frac{x_m}{x_e}$$

$$\mu_r = \frac{E_s}{x_e R_m} + 1/2 \qquad (3.6\text{-}18)$$

If other loads are present on the target structure which act concurrent with missile impact loads, (see Sections 3.6.1.6.5 and 3.6.1.6.6 and Table 3.6-6), the maximum combined displacement is determined as follows:

Let

x' = $x_e - x_o$ (see Figure 3.6-29) (ft)

x_o = displacement due to other loads (ft)

x_e = yield displacement (ft)

x_m = maximum combined displacement (ft)

R_m = plastic resisting force (lbs)

k = elastic spring constant (lb/ft)

Then

$$E_s = \frac{k(x')^2}{2} + kx'(x_m - x_e)$$

(See Figure 3.6-29)

or

$$x_m = \frac{E_s}{kx'} - \frac{x'}{2} + x_e$$

Substituting $x' = x_e - x_o$ in the above equation gives

$$x_m = \frac{E_s}{k(x_e - x_o)} + \frac{x_e + x_o}{2} \qquad (3.6\text{-}19)$$

The required ductility ratio, μr, is obtained by dividing both sides of Equation 3.6-19 by x_e.

$$\mu_r = \frac{E_s}{R_m(x_e - x_o)} + \frac{1 + x_o / x_e}{2} \qquad (3.6\text{-}20)$$

The values of M_r should be less than the allowable ductility ratios, M, given in Table 3.6-7.

3.6.1.6.3.3 Jet Impingement. Jet impingement loads are loads that emanate from a break in a high energy line. It is postulated that the characteristics of the jet are such that the jet exits from a break opening in the pipe equal in area to the cross sectional area of the pipe itself (see Figure 3.6-26). The jet is postulated to travel conforming to the configuration of the cross sectional area of the pipe for a distance of five pipe diameters and then to diverge at an angle of divergence of 10°. Where piping is restrained and break separation is limited to one-half pipe diameter or less a fan jet is postulated. A fan jet is perpendicular to the pipe centerline and extends 360° around the break at a 10° half angle as shown in Figure 3.6-30. For the jet thrust forces at the postulated breaks, see Table 3.6-3. Jet loads impacting structures are treated as equivalent static loads. A dynamic load factor is applied to the jet force emanating from the pipe and the resulting load is modified by an appropriate load factor according to its use in combination with other loads. The structure impacted is then evaluated for structural capability.

3.6.1.6.4 Allowable Design Stresses and Strains

For allowable design stresses and strains for reinforced concrete and structural steel, see Section 3.8.4.5 and Tables 3.8-11 and 3.8-12, except as modified in Sections 3.6.1.6.4.1 and 3.6.1.4.2.

3.6.1.6.4.1 Pipe Whip Loading With or Without Other Loads. The acceptability of pipe whip loading with or without other loads is considered from two aspects:

a. The overall structural response of the impacted structural element, and
b. The local damage sustained by the impacted structural element.

The overall structural response is considered acceptable if the ductility ratio resulting from the loading does not exceed the maximum allowable ductility ratios as given in Table 3.6-7. The

determination of ductility ratios utilizes the procedures set forth in Section 3.6.1.6.3 and the loading combinations in Section 3.6.1.6.6. In using these procedures, the allowable limit on section strength, M, used in the determination of yield displacement X_e, (Section 3.6.1.6.3.2, Tables 3.6-4 and 3.6-5 and Figure 3.6-29) is computed in accordance with the strength design methods described in ACI 318-71 (Reference 3.6-12) and in the general practices of Part 2 of the AISC specifications (Reference 3.6-11), modified by the dynamic strength increase factors of Table 3.6-8.

The local damage is considered acceptable if the pipe whip impact does not case spalling and excessive penetration in concrete, or perforation in steel, as determined by the procedures described in Section 3.6.1.6.2.

3.6.1.6.4.2 Pipe Break Loads (Excluding Pipe Whip) With or Without Other Loads. Pipe break loads (excluding pipe whip) with or without other loads are considered acceptable if the loading from the loading combinations in Section 3.6.1.6.6 does not result in stresses that exceed the allowable limits on section strength as given in Tables 3.8-11 and 3.8-12, modified by the dynamic strength increase factors in Table 3.6-8.

3.6.1.6.5 Loads, Definition of Terms, and Nomenclature

For loads, definition of terms, and nomenclature, see Section 3.8.4.3.

3.6.1.6.6 Load Combinations

3.6.1.6.6.1 Seismic Category I Concrete Structures. For load combinations for Seismic Category I concrete structures, see Table 3.8-9, load combinations 6, 7, and 8.

3.6.1.6.6.2 Seismic Category I Steel Structures. For load combinations for Seismic Category I steel structures, see Table 3.8-10, load combinations 6, 7, and 8.

3.6.1.7 Structural Design Loads

Structural elements are designed to withstand the loads generated by piping failures outside of primary containment in combination with other loads given in Section 3.6.1.6.6. Table 3.6-6 furnishes the design loads considered in the areas where piping failures occur.

3.6.1.8 Analysis of Load Reversal

Structural elements such as floors, interior walls, exterior walls, and the building as a whole are analyzed for the effects of reversal of load due to the postulated pipe failure accident. They are also analyzed for rebound loads that accompany pipe break accidents. The analysis approach for rebound is seen in Figure 3.6-31.

3.6.1.9 Modified Structures

The capabilities of structures to carry the design loads will be demonstrated for modifications as part of design change process controls.

3.6.1.10 Verification That Failure of Any Structure Does Not Preclude Safe Reactor Shutdown

Structures subject to pipe whip and/or jet impingement loads are investigated and found not to fail under these loads in conjunction with the applicable load combinations, so that there are no cases of structural barriers failing and causing additional structural failures which would adversely affect the mitigation of the consequences of accidents and the capability to bring the plant to a cold shutdown condition.

3.6.1.11 Verification That Adequate Redundancy Exists for All Postulated Fluid Piping System Ruptures

3.6.1.11.1 Approach

The purpose of the study is to ensure that for all postulated ruptures of fluid piping systems, safe reactor operation and shutdown is not precluded. The basis of this approach is that adequate separation of redundant systems or components required to shut down and maintain the reactor in a cold condition provides the level of protection required to ensure safe reactor operation and shutdown.

The input used for this study includes the routing of all cables, cable trays, and conduit necessary to shut down and maintain the reactor in a cold condition. The locations of all motor control centers; instrument racks; sensors; and heating, ventilating, and air conditioning (HVAC) equipment necessary to shut down and maintain the reactor in a cold condition are also included in the input of this study.

The locations of all postulated high- and moderate-energy fluid piping system ruptures dictate where this study is to be performed.

The input described above is coded to indicate the location of the system or component by elevations; the electrical division to which the component belongs; what the function of the component is; the various references, such as the drawings, in which the component is found; devices interconnecting the component and another system; and additional information of this type. This coding facilitates storage of the input for retrieval at any time.

Table 3.6-3 lists the high-energy design-basis break locations outside containment, the piping systems involved, the pipe diameter, the plan figure showing the piping system, and the maximum blowdown thrust or the thrust versus time figure.

Figures 3.6-32 through 3.6-56 illustrate and list the high-energy break locations inside containment and inside the main steam tunnel.

Moderate-energy crack locations are postulated in accordance with Standard Review Plan Sections 3.6.1 and 3.6.2.

3.6.1.11.2 Method of Analysis for Postulated High-Energy Fluid System Ruptures

3.6.1.11.2.1 Effects of Postulated Passive Component Failures. Postulated pipe breaks in high-energy fluid systems are investigated to determine their effects on the ability to bring the plant to a safe shutdown and to limit the offsite radiological consequences to an acceptable level as stated in 10 CFR 50.

On a case-by-case basis, the effects of pipe whip, jet impingement, and the resulting environmental conditions on safety-related equipment necessary for safe shutdown are evaluated. The effects of the postulated pipe break are dependent on the fluid properties of the system, the location and orientation of the pipe break, the proximity to safe shutdown systems, components, and structures, and the individual design limits of the safe shutdown systems, components, and structures.

Pipe breaks in high energy systems are postulated according to the criteria in Section 3.6.2.1. After identifying what equipment becomes inoperable, a worst case single random active component failure is postulated in a system not affected by the postulated high-energy fluid system rupture. Additionally, if the direct consequences of the postulated rupture results in a reactor or turbine trip, or could otherwise cause a loss of offsite power, offsite power is assumed unavailable.

3.6.1.11.2.2 Analytical Procedure. After all the consequences of the postulated pipebreak, passive and active component failures are evaluated, an analysis determines if safe shutdown can be accomplished. The following guidelines are used in this analysis:

a. For postulated ruptures of fluid piping systems, ensure that core cooling and reactivity control is maintained,

b. Demonstrate that redundant components or systems necessary to safely shut down and cool the reactor are not involved in the postulated passive component failure, and

c. Demonstrate that offsite radiological consequences do not exceed relevant standards.

3.6.1.11.3 Method of Analysis for Postulated Moderate-Energy Fluid System Ruptures

3.6.1.11.3.1 Approach. The analysis of moderate energy piping is performed in accordance with BTP ASB 3-1, Rev. 1, 1981. Postulated ruptures in moderate-energy fluid systems do not generate pipe whip. The analysis investigates the effects of the environment that results from such a postulated rupture on safety-related equipment, including the effects of water spray.

The effects of the postulated moderate-energy pipe cracks are dependent on the fluid properties, available fluid reservoir, drain systems, and the location and the individual design limits of the safety-related equipment, components, and structures necessary for safe shutdown.

Where moderate-energy pipe cracks are postulated in close proximity to high energy systems, the environmental analysis compares the effects of both high- and moderate-energy pipe ruptures. The most limiting case is evaluated for safe cold shutdown.

Moderate-energy pipe cracks are postulated according to the criteria in Section 3.6.2.1.

3.6.1.11.3.2 Method of Analysis. The locations of all postulated ruptures, resulting in through wall leakage cracks, are identified for later retrieval. The analysis assumes that the spray resulting from a postulated moderate-energy rupture causes the malfunction of all equipment not enclosed by compartments that minimize the effects of flooding.

Additionally, the most damaging single random active component failure in a system not affected by the postulated moderate energy pipe rupture is assumed. If the direct consequences of the passive component failure results in a turbine or reactor trip or could otherwise cause a loss of offsite power, then offsite power is assumed unavailable.

3.6.1.11.4 Summary of Analysis

In those cases where analysis discussed in Sections 3.6.1.11.2 and 3.6.1.11.3 identified a location where a postulated pipe rupture in a high- or moderate-energy system had impact on a safety-related component, which precluded the safe shutdown and cooling of the reactor, the component was relocated or protected.

This analysis by actual examination of the plant is undertaken to provide results based on as-built conditions.

Piping layouts for areas containing high- and moderate-energy lines, whose failure can affect the performance of safety-related equipment, are presented as Figures 3.5-10, 3.5-11, and Figures 3.6-1 through 3.6-20B.

Section 3.6.1.11 discusses in detail the methods used to demonstrate that no fluid system piping rupture, in conjunction with a single active component failure, precludes safe shutdown of the plant.

The following should serve to further clarify the method of analysis:

a. Analysis is performed to section B.3 criteria (pages 3.6.1-12 and 3.6.1-13) of BTP ASB 3-1, Rev. 1, 1981;

b. The forces developed at each postulated high-energy pipe break are determined by the methods of Section 3.6.2.2. The effects of the resultant pipe whip and jet impingement are evaluated. Credit is taken for automatic isolation and/or operator action to mitigate the consequences of the postulated pipe break, if the equipment required for this function is not affected by the break or included in item d below;

c. As a first step, all equipment with impact from the whipping pipe or jet is assumed to fail. If the equipment is required for safe cold shutdown or accident mitigation, a detailed analysis is performed to determine if the equipment will actually fail. Structures contacted by the whipping pipe or jet are evaluated for structural adequacy by the methods described in Section 3.6.2.2;

   Impact to pipes of smaller nominal diameter than the impacting pipe are assumed to fail, regardless of wall thickness of impacted pipe. Impact to pipe of both larger nominal diameter and thinner wall thickness than the impacting pipe are assumed to develop through wall leakage cracks;

d. The following comprises the minimum set of equipment necessary for safe shutdown following any high-energy or moderate-energy pipe break/crack assuming a worst-case single active failure:

   1. Pipe break/crack detection instrumentation
   2. Automatic, high-energy line break isolation equipment
   3. RPS (scram)
   4. MSIVs
   5. Five (5) SRVs for reactor vessel depressurization
   6. A single RHR loop with a heat exchanger (loop A or B), in the alternate shutdown cooling mode providing reactor vessel inventory makeup (short term cooling) and reactor vessel and suppression pool inventory cooling (long term cooling)
   7. Supporting Service Water
   8. Supporting HVAC
   9. Supporting electrical power sources;

e. After items b, c, and d have been evaluated, the ability to safely shut down is evaluated;

f. If analysis indicates that safe shutdown cannot be accomplished, then

1. Reroute or relocate cable, pipe, or equipment to prevent loss of function, or

2. If this is not feasible, shield the appropriate affected component(s) to prevent loss of function;

g. The flooding and environmental effects of moderate-energy failure are evaluated to determine whether they are more severe than the high-energy breaks. The high-energy breaks are addressed in Sections 3.6.1.11 and 3.6.1.15.

The area temperature is evaluated by determining the limiting postulated pipe break and using RELAP4/MOD5 (Reference 3.6-21) or GOTHIC (References 3.6-25 and 3.6-26). GOTHIC analyses described within Section 3.6 are performed in accordance with the constraints and limitations provided in the River Bend Unit 1 Safety Evaluation (Reference 3.6-27), or have demonstrated results which are essentially the same or conservative. The limiting pipe break for temperature analysis is that pipe break giving the highest energy release rate over the longest blowdown period.

The effects of flooding are evaluated by determining the limiting pipe break and calculating the effects of the fluid release. The limiting pipe break for flooding analysis is that pipe break with the highest mass flow rate over the longest blowdown period.

Peak differential pressure analysis results are provided in Table 3.6-9 and discussed in Section 3.6.1.20.

See Section 3.6.1.13 for electrical equipment environmental qualifications.

3.6.1.12 Control Room Habitability

A postulated rupture of main steam, feedwater, or RWCU piping has no effect on the continued habitability of the control room, since the radiation dose that control room personnel receive as a result of a postulated rupture is below the allowable limits.

The nuclear steam supply system (NSSS) piping outside of primary containment within the reactor building is enclosed by the main steam tunnel. The main steam tunnel, provided with pressure-relieving blowout panels, is designed to withstand the worst postulated piping system rupture attributable to the NSSS within the steam tunnel.

The high energy piping in the main steam tunnel is provided with pipe whip restraints as described in Section 3.6.1.5. These restraints limit the motion of the free ends of the ruptured NSSS piping to preclude the impact of the NSSS piping with the main steam tunnel structure.

The remaining high energy piping outside the primary containment is not routed in the vicinity of the control room, or does not possess sufficient energy to adversely affect the structural integrity of the control room wall.

Additionally, a remote shutdown panel is provided to permit safe reactor shutdown to a cold condition in the event the control room must be evacuated.

3.6.1.13 Electrical Equipment Environmental Qualifications

All electrical systems necessary for safe shutdown and necessary to maintain the plant in a safe shutdown condition are designed to remain functional in the general area environment resulting from a high-energy line break or from leakage cracks in moderate-energy piping. Specific equipment is either of the following:

a. Designed to remain functional as long as necessary in the general area environment, or

b. Isolated from the general area environment in compartments capable of maintaining normal equipment operating conditions.

Certain rotating equipment cannot be designed to function in the more severe, local steam environment. However, due to physical separation, rotating equipment of not more than one system is exposed to the local conditions which exceed the general area accident environment. Required redundancy is thus maintained for safety equipment.

See Section 3.11 for a more complete description of environmental design of electrical equipment.

3.6.1.13.1 Identification of Equipment

Safety equipment required to mitigate the consequences of an accident and place the reactor in a cold shutdown condition is listed in Table 3.11-2. The table also indicates the required duration following an accident that equipment is required to operate.

3.6.1.13.2 Environmental Design

See Section 3.11 for a discussion of environmental design and an analysis of safety-related electrical components. The section identifies the safety-related equipment that must operate in a hostile environment, and Table 3.11-2 indicates the postulated environmental enveloping conditions for both the general and local accident areas.

3.6.1.13.3 Jet Impingement Barriers

For results of the steam system study, see Section 3.6.1.11.4. Jet impingement barriers have been provided where analysis indicates they are needed to protect components required for reactor safe shutdown. In addition, some room wall, floors, and ceilings act as jet impingement barriers.

3.6.1.13.4 Control Room Equipment

Control room environmental effects, resulting from pipe break accidents, are discussed in Section 3.6.1.12. The postulated pipe breaks have no effect on the control room environment. All control room equipment, therefore, remains functional following a break.

3.6.1.13.5 Onsite Power Distribution System Equipment

See Section 3.11.

3.6.1.14 Design Diagrams of Nuclear Steam Supply System Piping

Figures 3.6-58 to 3.6-60 show the routing of NSSS piping from the outboard end of the containment penetrations to the turbine building.

3.6.1.15 Flooding Analysis

A study investigating the potential flooding attributable to the postulated rupture of high-energy fluid piping systems outside primary containment is provided below.

3.6.1.15.1 Postulated Rupture of the Reactor Feedwater Piping

The reactor feedwater piping outside primary containment, inside the reactor building, is completely enclosed by the main steam tunnel to provide protection against the dynamic effects of postulated fluid piping system ruptures. The main steam tunnel is provided with a blowout panel to discharge steam, to the atmosphere, above the turbine building. A second blowout panel provides for water drainage from the main steam tunnel into the turbine building. A flooding evaluation of the turbine building from any feedwater line break has been completed which shows that no safety-related equipment located within the turbine building would be adversely affected.

3.6.1.15.1.1 Consequences. The postulated rupture, of the feedwater piping in the main steam tunnel, would scram the reactor on low water level.

The isolation valves on the reactor pressure boundary would close to prevent loss of reactor coolant. A postulated active component failure could prevent the inboard isolation valve from

closing, while the dynamic effects of the passive component failure could prevent the outboard isolation valve from closing. The inboard check valve would close to prevent coolant loss, effectively stopping the reactor feedwater flow into the main steam tunnel.

Although a loss of offsite power is assumed, sufficient equipment remains available to safely shut down the reactor to a cold condition.

3.6.1.15.2 Postulated Ruptures of Reactor Water Cleanup System

Since the reactor water cleanup (RWCU) system has no safety function, postulated ruptures of this system have no effect on safe reactor operation, except the effect these postulated ruptures have on structures, systems, or components important to safety. As the analyses discussed in Sections 3.6.1.11 and 3.6.1.20 indicate, postulated ruptures of the RWCU system have no effect on the ability to safely shut down the reactor to a cold condition.

3.6.1.15.3 Postulated Ruptures of the Auxiliary Steam, Heating Steam, Auxiliary Condensate, and Heating Steam Condensate Systems

Since these systems have no safety function, postulated ruptures of these systems, as described in Sections 3.6.1.11 and 3.6.1.20, have no unacceptable consequences, except the effect these postulated ruptures have on structures, systems, or components important to safety. Ruptures in the auxiliary steam (AS), heating steam (HS), auxiliary condensate (CO), or HS condensate (HCO) systems do not prevent safe reactor shutdown to a cold condition. In the case of an AS line break in the reactor building, redundant isolation valves are automatically closed by temperature elements. There are no dynamic effects from the rupture, but the equipment environment (temperature and humidity) would exceed the qualified limits if the AS line to the reactor building was not isolated.

3.6.1.15.4 Additional Considerations

Postulated ruptures of high-energy fluid piping systems are not considered to cause flooding if the contained fluid is in the vapor phase. The main steam and reactor core isolation coolant systems are not considered sources of flooding incidents for this reason.

3.6.1.16 Quality Control and Inspection Programs

The quality control and inspection programs, required for the design and construction of piping systems outside containment, were given in Section 17.1. For the operational phase, the Inservice Inspection (ISI) Program and the Operational Quality Assurance Program Description (OQAPD) are applicable.

3.6.1.17 Leak Detection System Capabilities

The floor and equipment drain headers drain into five sumps in the reactor building at el. 422 ft 3 in. Four sumps are provided for floor drains and one for equipment drains. These sumps contain level switches which activate the sump pumps on high water level. This allows the operator to determine the severity of the leak and take corrective action.

In addition, wall-mounted Class 1E level switches are provided in each pump room in the reactor building at the basement (422 ft 3 in.) level. See Sections 3.4.1.4, 6.3.2.5, and 9.3.3 for more details.

3.6.1.18 Emergency Procedures to Mitigate the Consequences of a Postulated Fluid Piping System Rupture Outside Primary Containment

Shutdown modes available to the operator are determined by whether or not the reactor is isolated.

3.6.1.18.1 Reactor Not Isolated

For those classes of postulated ruptures which do not result in isolation of the RCPB, a normal shutdown is accomplished by using the main condenser and reactor feedwater system.

3.6.1.18.2 Reactor Isolated

With the reactor isolated from the main condenser, a variety of shutdown modes are available to the operator. A single postulated pipe rupture does not preclude the availability of all of them.

3.6.1.18.2.1 Reactivity Control. Before a shutdown can be accomplished, the core must be prevented from generating additional power. Two methods of reactivity control are utilized on the Columbia Generating Station reactor.

The CRD system is the normal means of controlling core reactivity.

The SLC system can be used to shut down the reactor by means of injected sodium pentaborate poison. Both of these systems are redundant and driven by either offsite or plant standby power supplies.

No single accident can render both power supplies unavailable.

3.6.1.18.2.2 Core Coolant Level Maintenance. The systems available for core cooling during reactor isolation are RHR, automatic depressurization system (ADS), RCIC, LPCS, and HPCS. The RHR system is comprised of four modes: shutdown cooling, hot standby (see

Section 5.4.7), low pressure cooling injection (see Section 6.3.2.2.4), and suppression pool cooling (see Section 6.2.2). See Section 6.3.1.2.4 for a description of the ADS. See Section 5.4.6 for a description of the RCIC system. See Section 6.3.2.2.3 for a description of the LPCS. See Section 6.3.2.2.1 for a description of the HPCS.

3.6.1.18.3 Methods of Shutdown Following a Postulated Rupture of a Fluid Piping System

3.6.1.18.3.1 Postulated Rupture of Main Steam Piping in the Main Steam Tunnel Vicinity. A postulated rupture of the main steam system does not generate any pipe whip impact on structures in the reactor building, since the main steam lines are supplied with pipe whip restraints.

High pressure differential signals from the main steam flow restrictors (indicating decrease in steam pressure at the turbine inlet) or high temperature indication in the vicinity of the main steam piping initiates automatic isolation of the main steam lines which, in turn, causes a reactor scram. Automatic relief valve operation maintains the reactor vessel pressure within allowable limits.

With the reactor isolated and scrammed, the HPCS or manual initiation of the ADS would be used to depressurize the reactor while either of the two redundant trains of the shutdown cooling mode of RHR systems would be employed to remove decay and sensible heat from the reactor pressure vessel (RPV).

3.6.1.18.3.2 Postulated Rupture of Reactor Feedwater Piping. A postulated rupture of a reactor feedwater pipe does not generate pipe whip impacts on structures outside primary containment within the reactor building since the feedwater piping is restrained.

The resulting blowdown from the feedwater break scrams the reactor when the low water level setpoint is reached. The operator can also initiate manual scram as the instrumentation will indicate a mismatch in main steam flow rate, reactor feedwater flow rate, and RPV inventory.

The scram, due to low water level, initiates emergency core cooling and RCIC operation. Decay heat removal is manually initiated by the operator.

The shutdown modes available after an operator initiated scram are the same as listed in Section 3.6.1.18.3.1.

3.6.1.18.3.3 Postulated Rupture of Reactor Core Isolation Cooling System Piping. Ruptures are postulated in the RCIC system in the turbine steam supply line or the condensate removal line, from the drip pot. A rupture of either line precludes operation of the RCIC system. A rupture of either line does not generate a scram and, therefore, normal shutdown procedures are used. Automatic isolation of the RCIC system occurs if a high pressure drop across the flow restrictor is sensed, high area temperature is sensed, or low line pressure is sensed.

3.6.1.18.3.4 Postulated Rupture of Residual Heat Removal System Piping. The RHR system, except in the hot standby mode, operates at pressures less than 135 psig steam dome pressure. Postulated failures of the RHR system piping at these pressures does not require any particular safety action. Rather shutdown cooling is reestablished using the redundant train of the RHR system.

In the event that the suction line from the RPV to the RHR pumps becomes inoperable, reactor depressurization can be accomplished by using the HPCS or the ADS. Heat can be removed from the suppression pool by use of the suppression pool cooling mode of the RHR system. For a detailed discussion of the possible shutdown modes see Section 15.2.9.

3.6.1.18.3.5 Postulated Rupture of the Control Rod Drive System Piping. Rupture of the CRD piping does not generate any significant pipe whip loads. While rupture of the CRD piping could prevent system operation, reactor scram is possible using either the nitrogen accumulators or reactor pressure. The SLC system could also be used to bring the reactor to a subcritical condition if the CRDs failed to function.

3.6.1.18.3.6 Postulated Ruptures of the Auxiliary Steam, Heating Steam, Auxiliary Condensate, and Heating Steam Condensate Piping. The consequences of a rupture in any of the above, including the dynamic effects of pipe whip and the resulting environmental conditions, are investigated as described in Section 3.6.1.11. In no instance does a postulated rupture of these systems preclude reactor shutdown to a cold condition.

These systems provide no emergency function that would be required to mitigate the consequences of a postulated piping failure. Therefore, normal reactor shutdown as well as the emergency methods described would not be simultaneously impaired.

3.6.1.18.3.7 Postulated Rupture of the Reactor Water Cleanup System Piping. The consequences of a RWCU system piping rupture are investigated as discussed in Section 3.6.1.11. In no circumstance, does the postulated failure of RWCU system piping preclude the availability of all shutdown modes. Since the RWCU system does not fulfill any safety function, nonoperability has no impact on the safe shutdown of the reactor.

3.6.1.19 Seismic and Quality Classifications of Piping Used in the Dynamic Analysis

See Table 3.2-1 for the seismic and quality classifications of piping systems identified in Table 3.6-3. See Section 3.2 for the definitions of the various seismic and quality classifications.

3.6.1.20 Method Used to Predict Blowdown Rates and Subcompartment Pressure Transient After a Postulated Pipe Break

3.6.1.20.1 Blowdown Analysis for a Postulated Pipe Break Outside the Primary Containment

The analytical approach used to determine the blowdown mass and energy rates from a postulated pipe break outside the primary containment are described in Sections 3.6.1.20.1.1 through 3.6.1.20.1.3.

3.6.1.20.1.1 Method of Analysis for a Postulated Pipe Break in Larger Pipes. For larger pipes, the blowdown mass and energy release are predicted by using the computer programs RELAP3 (Reference 3.6-9) or RELAP4/MOD5 (Reference 3.6-21) or GOTHIC (References 3.6-25 and 3.6-26). In the computer model, the piping system is nodalized into a number of volumes connected by flow junctions (or flow paths in GOTHIC). A multiplier of 1.0 is used with the choked flow correlation. Except in special cases, all breaks are assumed to be the double-ended circumferential type which open instantaneously. Initial conditions and other assumptions necessary for the analysis are such that the result is on the conservative side.

3.6.1.20.1.2 Method of Analysis for a Postulated Pipe Break in Smaller Pipes. For smaller pipes, a constant blowdown profile with an applicable choked flow correlation is used. The initial conditions are chosen to maximize the blowdown mass and energy release rates.

3.6.1.20.1.3 Blowdown Mass and Energy Release Rates for a Postulated Pipe Break in the Main Steam Line and the Reactor Feedwater Line in the Main Steam Tunnel. See Section 3.6.1.20.3.2 for a description of the arrangement and features of the main steam tunnel. For subcompartment analysis in the main steam tunnel, the postulated break in the main steam line and in the feedwater line is assumed to be a crack with the flow area equivalent to the flow area of a single-ended pipe. The blowdown mass and energy release rates are computed by the RELAP3 Program or GOTHIC (References 3.6-25 and 3.6-26).

Figures 3.6-61 and 3.6-62 show the mass and energy release rates after a postulated crack in the main steam line in the main steam tunnel. Figures 3.6-63 and 3.6-64 show the mass and energy release rates after a postulated crack in the reactor feedwater line in the main steam tunnel.

3.6.1.20.2 Subcompartment Analysis for Postulated Pipe Break Outside the Primary Containment Excluding the Main Steam Tunnel, Ventway, and Tunnel Extension

3.6.1.20.2.1 Method of Analysis. The pressure transient in the reactor building after a postulated pipe break is analyzed with the computer programs RELAP3 (Reference 3.6-9) or RELAP4/MOD5 (Reference 3.6-21) or GOTHIC (References 3.6-25 and 3.6-26). In the computer model, subcompartments are represented by nodes (or volumes in GOTHIC), and flow paths between two nodes are represented by flow junctions (or flow paths in GOTHIC). Volumes, vent areas, flow resistances, initial atmospheric conditions, as well as the blowdown mass and energy release rates from the pipe breaks, are input to the computer program. Since

the absolute pressure within the subcompartments after a pipe break outside the primary containment is low in all cases, no significant pressure gradient exists within a subcompartment itself. Therefore, a subcompartment is not nodalized in the analysis and a sensitivity study is not performed.

Table 7.6-2 lists leak detection system instrumentation. Table 6.2-16 lists valve closure times for automatic isolation functions tied into the leak detection system. Credit is taken for automatic isolation if the system capability is not affected by the postulated pipe break or assumed as a single active component failure. Check valves close on reversal of flow in a fraction of a second. In all cases, the blowdown terminates when the inventory of fluid in the line is exhausted.

Where blowdown flow is not automatically terminated by isolation valves or check valves as described above, the duration of the blowdown event as the inventory of fluid in a line is exhausted is not considered in the analysis of peak compartmental pressure and temperature. To evaluate the peak pressures and temperatures in compartments and structures following a postulated break of the high energy pipes inside the structures, the blowdown analysis is extended far beyond the initial transient until the blowdown flow becomes steady or decreases continuously. The duration of the analysis is therefore sufficient to correctly predict the peak pressures and temperatures in these compartments and structures.

For a postulated pipe break or leakage crack in the main steam lines outside the primary containment, the flow from the reactor side of the break is terminated by the closing of the main steam isolation valves (MSIVs) located in each of the four main steam lines. The MSIVs start to close at 0.5 sec after the break and are fully closed at or prior to 5.5 sec after the break, as given in Table 15.6-5.

For a postulated break or leakage crack in the reactor feedwater lines outside primary containment, the flow from the reactor side of the break is terminated by closing of the check valves in each of the two reactor feedwater lines. The check valves start to close when the direction of flow reverses, and the flow from the reactor side of the break is therefore terminated within a fraction of a second.

3.6.1.20.2.2 Initial Atmospheric Conditions. The initial atmospheric conditions within the subcompartments used for the analysis are

Reactor Building:

a. Pressure = 14.7 psia,
b. Temperature = 110°F, and
c. Relative humidity = 0.0%.

Radwaste Building:

a. Pressure = 14.45 psia,
b. Temperature = 80° F, and
c. Relative humidity = 60%.

These conditions are simulated in the RELAP computer analysis as a homogeneous saturated steam-water mixture at 14.7 psia with an average density equivalent to the density of air at the above conditions. When using GOTHIC, the initial conditions are as described using air and water vapor.

3.6.1.20.2.3 Vent Flow. In the RELAP analyses, the vent flow between the subcompartments is assumed to be a homogeneous steam-water mixture with 100% water entrainment. For choked flow, a multiplier of 0.6 is used for Moody two-phase flow correlations. In the GOTHIC analyses, vent flow is modeled as air, steam and water with choked flow as described in References 3.6-25 and 3.6-26. For unchoked flow, the flow resistance consists of an entrance loss, an exit loss, and frictional losses. For conservatism, an entrance loss of approximately 0.5 and an exit loss of 1.0 are assumed for most of the vents.

3.6.1.20.2.4 Results of Subcompartment Analyses. Subcompartment analyses are performed for all subcompartments containing high energy piping. The results are summarized in Table 3.6-9 for subcompartments containing safety related SSCs.

3.6.1.20.2.5 Verification of Structural Adequacy. Verification of structural adequacy of compartments or of structural elements thereof subject to pressure generated by a postulated pipe break and to the local effects in the structure generated by the postulated pipe break; namely, a broken pipe reaction, jet impingement, and pipe whipping impact are discussed in Sections 3.6.1.6 through 3.6.1.10.

3.6.1.20.3 Subcompartment Analysis for a Postulated Pipe Break in the Main Steam Tunnel

See Section 3.6.1.20.3.2 for a description of the arrangement and features of the main steam tunnel. Subcompartment analysis in the main steam tunnel, ventway, and tunnel extension is performed for a postulated crack in the main steam line (see Section 3.6.1.20.1.3). Comparison of mass and energy release rates for the postulated crack in the main steam line to that of a postulated crack in the reactor feedwater line (Figures 3.6-61 through 3.6-64) shows that the main steam line crack is the limiting case. Other lines inside the main steam tunnel or its extension are of smaller sizes and a break in those lines is less severe.

3.6.1.20.3.1 General Approaches. The pressure and temperature transients in the main steam tunnel, ventway, and tunnel extension after a postulated crack in the main steam line are computed by the RELAP4/MOD5 program (Reference 3.6-21) or GOTHIC (References 3.6-25 and 3.6-26). The general approaches discussed in Sections 3.6.1.20.2.1 through 3.6.1.20.2.3 also apply to this case.

3.6.1.20.3.2 Description of the Main Steam Tunnel, Ventway, and Tunnel Extension. Descriptive information of the main steam tunnel, ventway, and tunnel extension is provided in Section 3.8.4.1.1.4. Figures 3.6-65 and 3.6-66 show a sectional plan view and a sectional elevation view, respectively, of the main steam tunnel, ventway, and tunnel extension.

In plan, the main steam tunnel is located at 0° azimuth of the north side of the reactor building; in elevation, it extends from el. 501 ft 0 in. to el. 522 ft 0 in. At the interface of the reactor building and the turbine generator building, the main steam tunnel continues for a short distance into the turbine generator building; the portion in the turbine generator building is referred to as the tunnel extension. The ventway starts at the same level as the main steam tunnel and extends horizontally from the main steam tunnel in the easterly direction and continues upward to the underside of the corridor floor above at el. 548 ft 0 in., where a blowout panel in the north wall of the ventway provides a ventilating path to the atmosphere.

Four blowout panels are used, as shown in Figures 3.6-65 and 3.6-66:

a. Panel A, vertical, part of secondary containment, located between the north end of the main steam tunnel (in the reactor building) and the tunnel extension (in the turbine generator building), bolted in place, of sheet steel,

b. Panel B, vertical, part of secondary containment, located in the east wall of the main steam tunnel, bolted in place, of sheet steel,

c. Panel C, horizontal, part of secondary containment, located at the top of the main steam tunnel, the north edge of panel is hinged, other edges are free and not bolted in place, of sheet steel, and

d. Panel D, vertical, not part of secondary containment, located in the north exterior wall of the ventway, bolted in place, of insulated metal siding.

The fasteners of the blowout panels which are bolted in place (namely, panels A, B, and D) are designed to fail in single shear, and all blow-off panels (namely, panels A, B, C, and D) are designed to blow-off and permit venting when the pressure generated in the main steam tunnel, ventway, and tunnel extension by a postulated pipe break within the main steam tunnel or tunnel extension exceeds 0.5 psi.

3.6.1.20.3.3 Analysis for a Postulated Pipe Break in the Main Steam Tunnel. The analysis for a postulated pipe break in the tunnel extension is discussed in Section 3.6.1.20.3.4.

Figure 3.6-67 shows the nodalization scheme for a postulated pipe break in the main steam tunnel. For conservatism blow-out panels A and B are assumed to remain in place during the pressure transient. Therefore, the tunnel extension and the turbine generator building are not modeled in this case. Nodes 1 and 2 represent the main steam tunnel. Nodes 3, 4, 5, and 6 represent the ventway. Tables 3.6-10 and 3.6-11 provide the volume and flow junction data, respectively.

The hinged panel C is modeled as an inertia valve in the RELAP4/MOD5 analysis (see Reference 3.6-21). The differential equation of motion for the valve gate is:

$$I\,\ddot{\theta}\,(t) = \overline{A}\,P\,(t) - K\,\dot{\theta}\,(t) \qquad (3.6\text{-}21)$$

where

θ = opening angle (radians)

t = time (sec.)

$\dot{\theta} = \frac{d\theta}{dt}$

$\ddot{\theta} = \frac{d_2\theta}{dt^2}$

I = moment of inertia (lb_{mass} - ft^2)

A = area X moment arm (ft^3)

P = differential pressure (lb/ft^2)

K = damping constant $\left(\frac{lb_{mass} \text{ - } sec^2}{ft}\right)$

Let ω= angular velocity in radians/sec. and substituting $\omega = \dot{\theta}$ and $\omega = \theta$ in Equation 3.6-21.

$$I\dot{\omega} + K\omega = \overline{A}P$$

It has the solution

$$\theta = \theta_o + \omega_o t + \left(\frac{AP}{K} + \omega_o\right)\left[t\frac{I}{K}\left(1 - e^{\frac{-Kt}{I}}\right)\right] \qquad (3.6\text{-}22)$$

where θ_o and ω_o are values for θ and ω at $t = O$.

For panel D, the differential equation of motion is

$$M\ddot{s}(t) + AP(t) \qquad (3.6\text{-}23)$$

where

M = mass of panel $\left(\frac{lb_{mass} - sec^2}{ft}\right)$

s = displacement (ft)

v = velocity (ft/sec)

s = linear acceleration (ft/sec^2)

A = area of panel (ft^2)

P = average pressure (lb/ft^2)

t = time (sec)

The frictional force is neglected. The solution of the above equation is:

$$s = s_o + (v_o + \frac{F}{2m} t)\, t \qquad (3.6\text{-}24)$$

where s_o and v_o are values for s and v at t = O.

The displacement, s, of the panel and the opening area as functions of time are determined by iterative procedures.

Pertinent properties of blow-out panels C and D are seen in Table 3.6-12.

Figures 3.6-68 and 3.6-69 are plots of the pressure transients and Figures 3.6-70 and 3.6-71 are plots of the temperature transients for a postulated pipe break in Node 1.

Figures 3.6-72 and 3.6-73 are plots of the pressure transients and Figures 3.6-74 and 3.6-75 are plots of the temperature transients for a postulated pipe break in Node 2.

Blow-out panels C and D are assumed to blow off at the differential pressure noted in Section 3.6.1.20.3.2.

3.6.1.20.3.4 Analysis for a Postulated Pipe Break in the Tunnel Extension. Figure 3.6-76 shows the nodalization scheme for a postulated pipe break in the tunnel extension. Nodes 1 and 2 represent the tunnel extension. The vertical pipe restraint (see Figure 3.6-24) divides

Node 1 and 2. Nodes 3, 4, and 5 represent the following portions of the turbine generator building:

a. Node 3 represents the portion between the mezzanine floor at el. 471 ft 0 in. and the operating floor at el. 501 ft 0 in.,

b. Node 4 represents the portion between the ground floor at el. 441 ft 0 in. and the mezzanine floor at el. 471 ft 0 in., and

c. Node 5 represents the portion between the operating floor el. 501 ft 0 in. and the roof of the turbine generator building.

For conservatism, panel A (in Figures 3.6-65 and 3.6-66) is assumed to remain in place during the pressure transient, and only 10% of the insulated metal siding comprising the exterior walls above the operating floor (see Figure 1.2-5) of the turbine generator building is assumed to blow off the structural steel frame at a differential pressure of 0.5 psi. Tables 3.6-13 and 3.6-14 provide the volume and flow junction data, respectively.

Figures 3.6-77 and 3.6-78 are plots of the pressure transients and Figures 3.6-79 and 3.6-80 are plots of the temperature transients for a postulated pipe break in Node 1.

Figures 3.6-81 and 3.6-82 are plots of the pressure transients and Figures 3.6-83 and 3.6-84 are plots of the pressure transients for a postulated pipe break in Node 2.

3.6.1.20.3.5 Verification of Structural Adequacy. Verification of structural adequacy of the main steam tunnel ventway and tunnel extension, or of structural elements thereof, subject to load combinations involving pressure generated by a postulated pipe break and local effects in the structure generated by the postulated pipe break; namely, broken pipe reaction, jet impingement, and pipe whip impact are discussed in Sections 3.6.1.6 through 3.6.1.10.

3.6.1.20.3.6 Turbine Building Consequences of a Postulated Pipe Break in the Steam Tunnel Extension. The only items with safety-related functions in the turbine building are some reactor protection system (RPS) sensor inputs from the main steam system, MSIV isolation logic inputs from the main steam system, and the tower makeup transformers located on the turbine ground floor which are required to function only for the design basis tornado event. This last item is remote from the steam and feedwater lines (being located on the turbine ground floor) and has been evaluated to have adequate protection from tornado missiles and internal flooding (see Section 3.6.1.15.1). The RPS and MSIV isolation logic sensor inputs due to their nature cannot be made immune from pipe break effects. However, loss of this equipment during a postulated event would not result in loss of capability to bring the plant to a cold shutdown or mitigate the radiological consequences of such an incident even assuming a single failure among the safety systems that remain unaffected.

A pipe break in a main steam or feedwater line in the turbine building or steam tunnel extension could result in transitory pressurization of the corridors between the turbine building, reactor building, radwaste control building, and the diesel generator building. Air and steam would be forced into these corridors through openings in the south wall of the turbine-generator building, and through the seismic gap between the turbine building, reactor building, and radwaste control building. The large volume of the turbine building and because the turbine building metal siding and exterior doors are not leaktight and are not designed to withstand more than a minimal pressure differential, would result in the peak pressures seen by the reinforced-concrete walls of the reactor building and radwaste control building not exceeding the structural capacity of the walls. The doors to the control room are low-range blast doors designed to withstand a pressure differential of 3 lb/in.^{2}, which is considered adequate to maintain control room habitability as discussed in Section 3.6.1.12.

3.6.1.21 Description of Methods of Analyses to Ensure That Primary or Secondary Containment Integrity Is Not Compromised by a Postulated Passive Component Failure

The previous 20 sections present the results of analyses that indicate that postulated piping failures do not adversely affect safe reactor operation. Implicit in these analyses is the necessity of conforming to relevant standards with regard to offsite radiological consequences.

3.6.2 DETERMINATION OF BREAK LOCATIONS FOR DYNAMIC EFFECTS ASSOCIATED WITH THE POSTULATED RUPTURE OF PIPING

Information concerning postulated break and crack location criteria and methods of analysis for evaluating the dynamic effects associated with postulated breaks and cracks in high- and moderate-energy fluid system piping inside and outside of primary containment is presented in this section. The information presented in this section and in Section 3.6.1 confirms that the requirements for the protection of structures, systems, and components relied on for safe reactor shutdown or to mitigate the consequences of a postulated pipe break have been met.

3.6.2.1 Criteria Used to Define Break and Crack Location and Configuration

The following section establishes the criteria for the location and configuration of postulated breaks and cracks in high-energy and moderate-energy piping systems both inside and outside of primary containment.

High-energy fluid systems are defined as those systems or portions of systems that during normal plant conditions* are maintained pressurized under conditions where either one or both of the following are met:

a. Maximum temperature exceeds 200°F
b. Maximum pressure exceeds 275 psig.

Moderate energy fluid systems are defined as those systems, or portions of systems, that during normal plant conditions are pressurized under both of the following conditions:

a. Maximum temperature is 200°F or less, and
b. Maximum pressure is 275 psig or less.

Piping systems are classified as moderate-energy systems, when they operate as high energy piping for only short periods in performing their system function. For the major operational period they qualify as moderate-energy fluid systems. An operational period is considered "short" if the total fraction of time that the system operates, within the pressure-temperature conditions specified for high-energy fluid system, is less than approximately 2% of the time period that the system operates as a moderate-energy fluid system.

A postulated pipe break is defined as a sudden, gross failure of the pressure boundary either in the form of a complete circumferential severance (guillotine break) or as development of a sudden longitudinal crack (longitudinal split). These are postulated for high-energy fluid systems only. For moderate-energy fluid systems, pipe rupture is confined to postulation of leakage cracks in piping and branch runs. These cracks affect the surrounding environmental conditions only and do not cause jet impingement or uncontrolled whipping of the pipe.

A moderate-energy piping system crack is not postulated simultaneously with a high-energy piping system break, nor is any pipe break or crack outside containment postulated concurrently with a pipe break or crack inside containment.

Postulated pipe break locations are selected as described herein and are based on the guidelines provided in Regulatory Guide 1.46, Revision 0; the BTP ASB 3-1, and as expanded in BTP MEB 3-1 for piping inside and outside primary containment.

* Normal plant conditions are defined as the plant operating conditions during reactor startup, operation at power, hot standby, or reactor cool down to cold shutdown, but excluding test modes.

3.6.2.1.1 Postulated Pipe Break Locations in High-Energy Fluid System Piping Not in the Containment Penetration Area

Pipe breaks (not including leakage cracks) are postulated at locations as indicated below:

3.6.2.1.1.1 Postulated Pipe Break Locations in ASME Section III Class I Piping Runs.

The terminal ends* of the pressurized portions of the run.

Intermediate locations of postulated pipe breaks are selected by application of one of the following sets of rules:

a. Pipe break is postulated at each location of significant change in flexibility, such as pipe fittings (elbows, tees, and reducers), and circumferential connections to valves and flanges;

b. Based on stress and fatigue analysis, as calculated according to ASME Code Section III Subarticle NB-3600, no break is postulated if any of the following applies:

1. S_n† does not exceed $2.4S_m$‡,

---

* Terminal ends are extremities of piping runs that connect to structures, components (e.g., vessels, pumps, valves), or pipe anchors that act as rigid constraints to piping motion and thermal expansion. A branch connection to a main piping run is a terminal end of the branch run, except where the branch run is classified as part of the main run in the stress analysis and is shown to have a significant effect on the main run behavior. In piping runs which are maintained pressurized during normal plant conditions for only a portion of the run (i.e., up to the first normally closed valve), a terminal end of such runs is the piping connection to this closed valve.

† S_n is the primary plus secondary stress intensity range, as calculated by use of Equation (10) of ASME Code Section III Subsection NB, Paragraph NB 3653.1, between any two load sets (including the zero load set) for normal and upset plant conditions, including an OBE event transient.

‡ S_m is the design stress intensity, as described in ASME Code Section III Subsection NB, Paragraph NB 3229.

2. S_n exceeds $2.4S_m$ but does not exceed $3S_m$, and the Cumulative Usage Factor (U)* does not exceed 0.1, and

3. S_n exceeds $3S_m$, but S_e† and S_r‡ are each less than $2.4S_m$, and U does not exceed 0.1.

3.6.2.1.1.2 Postulated Pipe Break Locations in ASME Section III Class 2 and 3 Piping Runs.

The terminal ends of the pressurized portions of the run.

Intermediate locations of postulated pipe breaks are selected by applications of one of the following sets of rules:

a. Pipe break is postulated at each location of significant change in flexibility, such as pipe fittings (elbows, tees, and reducers), and circumferential connections for valves and flanges,

b. At each location here the stresses under the loadings resulting from upset plant conditions, including an operating basis earthquake (OBE) event as calculated by the summation of Equations (9) and (10) of ASME Code Section III Subsection NC, Paragraph NC 3652, exceed 0.8 ($1.2S_h + S_A$) where S_h and S_A), are as defined in Paragraph NC 3611.2, or

c. Intermediate breaks are not postulated in sections of straight pipe where there are no pipe fittings, valves, or flanges.

3.6.2.1.1.3 Break Locations in Other Piping Runs. Postulated pipe break locations for piping other than ASME Code Section III Class 1, 2, and 3, are postulated in accordance with pipe whip criteria which conforms to the criteria set forth for ASME Code Section III Class 2 and 3 piping.

---

* U is the Cumulative Usage Factor that indicates the total fatigue damage as calculated by the procedure in ASME Code Section III Subsection NB, Paragraph NB 3653.

† S_e is the nominal value of expansion stress as calculated by use of Equation (12) of ASME Code Section III Subsection NB, Paragraph NB 3653.6(a).

‡ S_r is the range of primary plus secondary membrane plus bending stress intensity, excluding thermal bending and thermal expansion stresses as calculated by use of Equation (13) of ASME Code Section III Subsection NB.

3.6.2.1.2 Postulated Pipe Break Locations in High-Energy Fluid System Piping Between Primary Containment Isolation Valves

Pipe breaks (not including leakage cracks) are postulated in locations as indicated below:

3.6.2.1.2.1 Postulated Pipe Break Locations in ASME Section III Class 1 Piping Between Primary Containment Isolation Valves. No pipe breaks are postulated in the portion of piping between primary containment isolation valves, if any of the following apply:

a. S_n does not exceed $2.4S_m$,

b. S_n exceeds $2.4S_m$ but does not exceed $3S_m$, and the Cumulative Usage Factor (U) does not exceed 0.1, or

c. S_n exceeds $3S_m$, but S_e and S_r are each less than $2.4S_m$, and U does not exceed 0.1.

The stress levels in the ASME Section III Class 1 containment penetration high-energy piping are maintained at or below these limits and therefore, breaks are not postulated.* See Section 3.6.2.1.2.3 for further discussion of containment penetration piping.

Piping systems which may have break exclusion areas between primary containment isolation valves are those determined by examining the list of high-energy piping systems (see Section 3.6.2.1 and Table 3.6-15). Systems which do not pass through primary containment are excluded. In addition, systems which are not pressurized between the isolation valves during normal plant operation (see Table 3.6-15) are excluded. The remaining systems, those which may have break exclusion areas between primary containment isolation valves are listed in Table 3.6-16. Break exclusion areas for these systems are shown in Figures 3.6-85 through 3.6-88.

3.6.2.1.2.2 Postulated Pipe Break Locations in ASME Section III Class 2 and 3 Piping Between Primary Containment Isolation Valves. See Section 3.6.2.1.1.2, for stress criteria applicable to ASME Section III Class 2 and 3 piping between containment isolation valves.

The stress levels are maintained at or below these limits and therefore, breaks are not postulated. See Section 3.6.2.1.2.3 for further discussion of containment penetration piping.

* A program for augmented inservice inspection for high energy line breaks is included in the Inservice Inspection Program Plan.

3.6.2.1.2.3 Primary Containment Penetration Piping. To maintain containment integrity, primary containment penetrations are designed with the following characteristics:

a. They are capable of withstanding the forces caused by impingement of the fluid from the rupture of the largest local pipe without failure, and

b. They are capable of withstanding the maximum reactions that the pipes to which they are attached are capable of exerting.

Piping and electrical penetration details are discussed and shown in Section 3.8.6.

The stress criteria for postulating breaks in containment penetration piping between isolation valves is given in Sections 3.6.2.1.2.1 and 3.6.2.1.2.2.

Welded attachments, for pipe supports or other purposes, to these portions of piping are avoided except where detailed stress analyses or tests are performed to demonstrate compliance with the limits of Section 3.6.2.1.2. In addition, the number of circumferential and longitudinal piping welds and branch connections are minimized.

Any pipe anchors or restraints (e.g., connections to containment penetrations and pipe whip restraints) are designed such that they are not welded directly to the outer surface of the piping except where such welds are 100% volumetrically examinable while in service, and a detailed stress analysis is performed to demonstrate compliance with the limits of Section 3.6.2.1.2.

Tunnel structures surrounding the primary containment penetration piping are designed for the thermal and pressure loads of a through wall leakage crack regardless of crack postulation requirements. See Section 3.6.1.20 for further discussion.

Access for ISI of welds in high-energy (hot type) containment penetration assemblies is described in Section 3.8.6.1.1. All required ISI locations are accessible.

3.6.2.1.3 Postulated Through Wall Leakage Crack Locations in High- and Moderate-Energy Fluid Systems

Cracks in high energy systems, regardless of ASME Code classification, were evaluated at Columbia Generating Station both inside and outside of containment. Inside containment it was found that the circumferential or longitudinal high energy line breaks bounded the structural and environmental consequences produced by a leakage crack at any location in a high energy line. Outside containment analyses were completed or protection was provided to ensure that critical plant systems are not harmed by leakage cracks in adjacent high energy systems.

In moderate-energy piping systems consisting of ASME Code Section III Class 2 and 3 piping and moderate-energy nonnuclear piping, including fluid system piping between primary containment isolation valves, cracks are not postulated provided the stress range of 0.4 ($1.2S_h^*$ + $S_A^\dagger$) is not exceeded for the load combination which includes the effects of pressure, weight, other sustained loads, and occasional loads such as the OBE and thermal expansion loads. Since all piping in structures housing safety-related systems are supported and controlled as Seismic Category I systems regardless of service, the criteria for postulated cracks is the same as above for all systems.

3.6.2.1.4 Types of Breaks and Cracks Postulated in High-Energy and Moderate-Energy Fluid System Piping

3.6.2.1.4.1 Breaks in High-Energy Fluid System Piping. The following types of breaks are postulated in high-energy fluid system piping:

No breaks need be postulated in piping having a nominal diameter less than, or equal to 1 in.

Circumferential breaks are postulated only in piping exceeding a 1 in. nominal pipe diameter.

Longitudinal splits are postulated only in piping having a nominal pipe diameter equal to or greater than 4 in.

Longitudinal splits are not postulated at terminal ends.

At each of the postulated break locations, consideration is given to the occurrence of either a longitudinal split or circumferential break. Both types of breaks are considered if the maximum stress ranges in the circumferential and axial directions are not significantly different. Only one type break is considered as follows:

a. If the result of a detailed stress analysis indicates that the maximum stress range in the axial direction is at least 1.5 times that in the circumferential direction, only a circumferential break is postulated. Where usage factor is a determinant in establishing a postulated break location, the fatigue dominant stresses are

---

* S_h is the allowable stress at maximum (hot) temperatures defined in ASME Code Section III, Article NC 3611.2.

† S_A is the allowable stress range for thermal expansion, as defined in ASME Code Section III, Article NC 3611.2.

examined as indicated above to determine whether longitudinal, circumferential, or both are postulated; or

b. If this type of analysis indicates that the maximum stress range in the circumferential direction is at least 1.5 times that in the axial direction, only a longitudinal split is postulated.

Where break locations are selected without the benefit of stress calculations, circumferential breaks are postulated at the piping welds to each fitting, valve, or welded attachment.

For a longitudinal split, the break area is assumed to be equal to cross-sectional flow area of the pipe.

For circumferential breaks, pipe whipping is assumed to occur in the plane defined by the piping configuration and is assumed to cause pipe movement in the direction of the jet reaction.

A longitudinal break is assumed to result in an axial split without severance and to be oriented at any point about the circumference of the pipe or alternatively at the point(s) of highest stress as indicated by a detailed stress analysis. If a postulated break location is at a nonaxisymmetric fitting, such as a tee or elbow, the split is assumed to be oriented (but not concurrently) on each side of the fitting at its center, perpendicular to the plane of the fitting and is assumed to cause pipe movement in the direction of the jet reaction.

For a circumferential break, the dynamic force of the jet discharge at the break location is based upon the effective cross sectional flow area of the pipe and on a calculated fluid pressure, as modified by an analytically or experimentally determined thrust coefficient. A circumferential break is assumed to result in pipe severance with full separation amounting to at least a one-pipe-diameter lateral displacement of the ruptured piping sections, except as limited by structural design features. The break is assumed to be oriented perpendicular to the longitudinal axis of the pipe. Line restrictions, flow limiters, and the absence of energy reservoirs are accounted for in the calculation of the design jet discharge.

3.6.2.1.4.2 Cracks in High-Energy and Moderate-Energy Fluid System Piping. The following controlled through wall leakage cracks are postulated in high-energy and moderate-energy fluid systems (or portion of systems):

Cracks are postulated in fluid systems or portions of systems whose size exceeds a nominal pipe diameter of 1 in.

Fluid flow from the postulated crack is based on a circular opening of area equal to that of a rectangle one-half pipe-diameter in length and one-half pipe wall thickness in width.

The flow from the postulated crack is assumed to result in an environment that wets all unprotected components within the compartment, with subsequent flooding in the compartment and communicative compartments. Flooding effects are determined on the basis of a conservatively estimated time period required to affect corrective action.

3.6.2.1.5 Protection Criteria for the Effects of Pipe Break

Protection from the effects of a whipping pipe due to a pipe break is provided where necessary. Protection from pipe whip need not be provided if any one of the following conditions exists: The piping is classified as moderate energy piping. Following a single postulated pipe break, piping for which the unrestrained movement of either end of the ruptured pipe, in the direction of the jet reaction about a plastic hinge, formed within the piping, cannot impact any structure, system, or component important to safety. Piping for which the internal energy level associated with the whipping is insufficient to impair the safety function of any structure, system, or component to an unacceptable level. Any line restrictions (e.g., flow limiters) between the pressure source and break location, and the effects of either a single-ended or double-ended flow condition are accounted for in the determination of the internal fluid energy level associated with the postulated pipe break reaction. The energy level in a whipping pipe will be considered insufficient to rupture an impacted pipe of equal or greater nominal pipe size and of equal or heavier wall thickness.

For further discussion of pipe whip protection, see Section 3.6.2.3.3.

Protection of essential systems from the effects of jet impingement is provided where necessary to ensure reactor shutdown to a safe cold condition and to limit the release of radioactivity to within 10 CFR Part 100 limits. For further discussion of criteria for protection against jet impingement, see Section 3.6.2.3.2.

3.6.2.2 Analytic Methods to Define Blowdown Forcing Functions and Response Models

3.6.2.2.1 Analytical Methods to Define Blowdown Forcing Functions

The rupture of a pressurized pipe causes the flow characteristics of the system to change, creating reaction forces which can dynamically excite the piping system. The reaction forces are a function of time and space and depend on fluid state within the pipe prior to rupture, break flow area, frictional losses, plant system characteristics, piping system, and other factors. The methods used to calculate the reaction forces for various piping systems are presented in the following sections.

A rise time, not exceeding 1 msec, is assumed for the initial pulse of the fluid blowdown forcing function, unless longer crack propagation times or rupture opening times are substantiated by experimental data or analytical theory.

Blowdown forcing functions are determined by either of two general methods given below:

a. The predicted blowdown forces on pipes fed by a pressure vessel can be described by transient and steady-state forcing functions. The forcing functions used are based on methods described in References 3.6-3 and 3.6-22. These may be simply described as follows:

1. The transient forcing functions occur at points along the pipe from the propagation of waves (wave thrust) along the pipe and at the broken end from the reaction force due to the momentum of the fluid leaving the end of the pipe (blowdown thrust);

2. The waves cause various sections of the pipe to be loaded with time-dependent forces. It is assumed that the pipe is one-dimensional in that there is no attenuation or reflection of the pressure waves at bends, elbows and the like. Following the rupture, a decompression wave is assumed to travel from the break at a speed equal to the local speed of sound within the fluid. Wave reflections occur at the break end and the pressure vessel end until a steady flow condition is established. Free-space and vessel conditions are used as boundary conditions. The blowdown thrust causes a reaction force perpendicular to the plane of the pipe break, reaching a final steady state value;

3. The initial blowdown force on the pipe is taken as the sum of the wave and blowdown thrusts and is equal to the vessel pressure (P_o) times the break area (A). After the initial decompression period (i.e., the time it takes for a wave to reach the first change in direction), the force is assumed to drop off to the value of the blowdown thrust (i.e., 0.7 P_oA);

4. Time histories of transient pressure, flow rate, and other thermodynamic properties of the fluid can be used to calculate the flowdown force on the pipe using the following equation:

$$F = \{(P - P_a) + \frac{\rho u^2}{g}\}A$$

where

F = blowdown force

P = pressure at exit plane

P_a = ambient pressure

u = velocity at exit plane

ρ = density at exit plane

A = area of break

g = gravitational constant

5. Following the transient period, a steady-state period is assumed to exist. Steady-state blowdown forces are calculated, considering frictional effects. For saturated steam, these effects reduce the blowdown forces from the theoretical maximum of 1.26 P_oA. The method of accounting for these effects is presented in References 3.6-3 and 3.6-22. For subcooled water, a reduction from the theoretical maximum of 2.0 P_oA is found through the use of Bernoulli's and other standard equations, such as Darcy's equation, which account for friction.

b. The following is an alternative method for calculating blowdown forcing functions.

Computer code simulation either by RELAP3 (Reference 3.6-9) or GOTHIC (References 3.6-25 or 3.6-26) is used to obtain exit plane thermodynamic states for postulated ruptures (see Section 3.12.11 for further discussion of the software). Specifically, the software calculates exit pressure, specific volume, and mass rate. From these data the blowdown reaction load is calculated using the following relation:

$$\frac{T}{A_E} = (P_E - P_\infty) + \frac{G_E{}^2 \overline{V}_E}{g_C}$$

$$R = -\frac{T}{A_E} \times A_E$$

where

$\frac{T}{A_E}$ = thrust per unit break area

P_E = exit pressure

P_∞ = receiver pressure

G_E = exit mass flux

$\overline{V}_E$ = exit specific volume

g_c = gravitational constant

R = reaction force on the pipe

3.6.2.2.2 Analytical Methods to Define Response Models

3.6.2.2.2.1 General Description of Analytical Methods. The prediction of time-dependent and steady-thrust reaction loads caused by blowdown of subcooled, saturated, and two-phase fluid from a ruptured pipe is used in the design of piping systems and in the evaluation of dynamic effects of pipe breaks. A detailed discussion of the analytical methods employed to compute these blowdown loads are given in Section 3.6.2.2.1. The analytical methods used to account for this loading are discussed below.

3.6.2.2.2.2 Dynamic Analysis of the Effects of Pipe Rupture.

Criteria

a. Analysis is performed for each postulated pipe break;

b. The analysis includes the dynamic response of all components of the system including the pipe, pipe whip restraints, and all structures required to transmit loading to foundation. The structures are analyzed for a suddenly applied force in conjunction with impact and rebound effects due to gaps between piping and pipe whip restraints;

c. The analytical model adequately represents the mass/inertia and stiffness properties of the system;

d. Pipe whipping is assumed to occur in the plane defined by the piping geometry and configuration and to cause pipe movement in the direction of the jet reaction;

e. Piping contained within the broken loop is no longer considered part of the RCPB. Plastic deformation in the pipe is considered as a potential energy absorber. Limits of strain are imposed similar to pipe whip material (see Section 3.6.2.2.3.2) restraint. Piping systems are designed so that plastic

instability would not occur in the pipe at the design dynamic and static loads, unless damage studies are performed which show that the consequences could not result in the direct damage of any essential system or component; and

f. Components such as vessel safe ends and valves, which are attached to the broken piping system and do not serve a safety function or whose failure would not further escalate the consequences of the accidents, are not designed to meet ASME Code requirements for essential components under faulted loading. However, if these components are required for safe shutdown or if they serve a safety function to protect the structural integrity of an essential component, then these components are designed to code limits for faulted conditions and to the limits necessary to ensure operability.

Analytical Models

a. Lumped-Parameter Analysis Model: Lumped mass points are interconnected by springs to take into account for the effects of inertia and stiffness inherent in the system, and time histories of the responses are computed by numerical integration to account for gaps and inelastic effects. This analytical method is discussed in detail in Reference 3.6-4;

b. Energy-Balance Analysis Model: Kinetic energy, generated during the first quarter cycle movement of the ruptured pipe as imparted to the piping/restraint system through impact, is converted into equivalent strain energy. Deformations of the pipe and the restraint are compatible with the level of absorbed energy; and

c. Pipe whip restraints for the reactor recirculation system are designed by the NSSS supplier. The analytical method utilized for this design is the computer program PDA which is described in Reference 3.6-4 and further discussed in Section 3.12.33.

Pipe whip restraints for all other piping systems requiring such protection are designed by the architect/engineer; the method described below is used for this pipe whip restraint design.

Simplified Dynamic Analysis

a. To simplify dynamic analysis the following conservative assumptions are used:

1. The entire structure including pipe, restraint linkage, support beams, and major structure to foundation connections absorb energy by elastic, elastoplastic, or plastic deformation. To provide a simplified dynamic

mathematical model, one member is generally considered to absorb all the energy. This member is classified as an energy absorbing member and is designed as described in Section 3.6.2.3.3.2. The other components of the structure are assumed as infinitely rigid. These are classified as load transmitting members and are designed as described in Section 3.6.2.3.3.2;

2. The time history of unbalanced forces on the ruptured pipe is reduced to a suddenly applied constantly maintained force, which envelopes the actual force at any particular time, or is based on a more sophisticated blowdown calculation; and

3. Dynamic loading on the pipe whip restraint is reduced to a suddenly applied, constantly maintained force described above, in conjunction with a kinetic energy of impact.

b. Simplified analytical models such as simple beams, structural frames, and ring girders on assumed rigid supports are modeled as single springs. One example of such a typical analytical model is shown in Figure 3.6-89. For these, the required member resistance (R_r) is determined by application of the formula shown in Figure 3.6-90. This derived equation is based on References 3.6-1 and 3.6-2. The following is a description, and discussion of the parameters used in this derivation:

1. The term (R_r) represents the required member resistance (strength) when loaded by a suddenly applied constantly maintained force (F_1), in conjunction with a kinetic energy of impact (K), due to collision of a moving body (i.e., ruptured pipe) with the member in question;

2. The impulse (i) is represented by the area under any load time history having a time of duration (t_d), which is small compared with the natural period of the impacted member;

3. The kinetic energy is represented by $i^2/2M$, where (i) is the impulse and (M) is the mass of the moving body;

4. The kinetic energy of impact (K) is also represented by the product of the Force (F_1) which accelerates the ruptured pipe, and a distance (d) the total distance traveled by the moving body from time zero to time of collision with the member in question. Note that when the resisting member is in direct contact with the ruptured pipe, the distance (d) is zero and the kinetic energy (K) reduces to zero. Likewise, when no

resisting member is required, the ruptured pipe does not collide with anything and therefore no kinetic energy of impact exists. In these events the equation shown in Figure 3.6-90 is applicable with (K) equal to zero;

5. The energy absorbing member is permitted to deform into the plastic region. Thus the member resistance is bilinear. (Y_e) is the deflection of the member at the end of elasticity of the member. (Y_m) is the maximum deflection of the member;

6. The elastic spring constant (k) is the ratio of load on the member divided by the deflection due to this load, where the deflection is equal to or less than the value (Y_e) and the load is compatible with this concept. Thus (k) can be expressed as (R_r/Y_e);

7. For inelastic response the maximum deflection (Y_m) is always larger than the elastic deflection (Y_e). For this case, the ratio (Y_m/Y_e) is defined as the ductility ratio (μ);

8. The maximum deformation of the energy absorbing member is controlled by limiting the ductility ratio (μ).

   Reference 3.6-6 provides the ductility ratio that corresponds to collapse (μ_c). For structural steel members, these values vary with upper limits in the order of 20 to 30 and up (for very ductile structures). For Columbia Generating Station, the maximum permissible ductility ratio is limited to 50% of (μ_c), except that energy absorbing members in direct contact with primary containment are limited to 5% of (μ_c). For Columbia Generating Station, only steel members are utilized as energy absorbing members, as defined in Section 3.6.2.3.3.2. The maximum values of (μ_c), for various structural components, are given in Table 3.6-7; and

9. The equation derived in Figure 3.6-90 accounts for a suddenly applied constantly maintained force in conjunction with a kinetic energy of impact on the resisting member. Total transfer of energy is implied. This is combined with the constantly maintained force (from ruptured piping blowdown) on the restraint structure. This assumption is consistent with a zero coefficient of restitution (full plasticity), and is a conservative assumption.

With regard to rebound, it should be noted that if a coefficient of restitution of unity is assumed (full rebound), there is zero kinetic energy transfer to the restraint structure.

If a coefficient of restitution less than unity is assumed (partial rebound), there is a partial amount of kinetic energy transfer to the restraint structure.

A coefficient of restitution of zero conservatively assumed in the application of the equation mentioned above gives zero rebound with 100% kinetic energy transfer to the restraint structure.

It should also be noted that the assumption of a suddenly applied constantly maintained force as used in the equation mentioned above is conservative with respect to rebound. Rebound implies a finite time of short duration contact with the restraint structure, in contrast to the infinite time assumed.

c. Actual structural resistance for the above structures is determined by methods of limit analysis using a dynamic yield strength, as defined in Section 3.6.2.2.3.1.

3.6.2.2.3 Material Properties Under Dynamic Loads

3.6.2.2.3.1 Dynamic Yield Strength. To account for the rapid strain rate effects, dynamic yield strength is utilized. This phenomenon is documented in References 3.6-6 and 3.6-7. Material tests have shown a consistent increase in yield strength under rapid loading. Under rapid strain rate, carbon steel yield strength consistently improves by more than 40%. High strength alloy steel displays a somewhat smaller improvement. For Columbia Generating Station, a conservative dynamic yield strength of 110% of minimum static yield strength, at the specified operating temperature, is used.

3.6.2.2.3.2 Maximum Strain of Tension Members. Pure tension members, such as U-bars shown in Figure 3.6-21 which act to limit pipe whip are permitted to deform during energy absorption: (a) a maximum of 50% of the minimum uniform strain (at the maximum stress on an engineering stress-strain curve) based on actual restraint material tests or (b) one-half of minimum percent elongation as specified in the applicable ASME Code Section II or ASTM Specifications if demonstrated to be less than 50% of the minimum uniform strain based on representative test results.

The dynamic tensile and impact properties are specified to be not less than (a) 70% of the static percent elongation or (b) 80% of the statically determined minimum total energy absorption.

3.6.2.2.3.3 Maximum Deformation of Flexural Members. Deformations of energy absorbing flexural support members are generally limited to 50% of that deformation which corresponds to structural collapse, except that deformation of energy absorbing members in direct contact with the primary containment vessel is limited to 5% of that deformation which corresponds to structural collapse.

3.6.2.2.3.4 Materials and Proportions of Structural Shapes. The materials and proportions of structural shapes for energy absorbing members are in accordance with recommendations for dynamic member design as documented in References 3.6-6 and 3.6-7.

3.6.2.3 Dynamic Analysis Methods to Verify Integrity and Operability

3.6.2.3.1 Dynamic Analysis Methods for Jet Impingement Effects

The procedure for analyzing the dynamic effects of jet impingement has been extracted from Reference 3.6-8.

Computer simulation using either RELAP3 (Reference 3.6-9) or GOTHIC (References 3.6-25 and 3.6-26) with required geometric input data is run to obtain the exit plane thermodynamic state and mass flow rate. Specifically, the quantities output the computer simulations are

M	= mass flow rate	lb_m/sec
$\overline{V}_E$	= specific volume	ft^3/lb_m
P_E	= exit pressure	lb_f/ft^2

The reaction load on the piping system is given by

$$\frac{T}{A_E} = (P_E - P_\infty) + \frac{G_E{}^2 \overline{V}_E}{g_c} \qquad (3.6\text{-}25)$$

where

$\frac{T}{A_E}$	= thrust per unit area	lb_f/ft^2
P_∞	= receiver pressure	lb_f/ft^2
G_E	= mass flux	$lb_m/sec\ ft^2$

P_E	= exit pressure	lb_f/ft^2
$\bar{V}_E$	= specific volume at exit	ft^3/lb
g_c	= Newton's constant	$32.174 \frac{ft - lb_m}{lb_f\ sec^2}$

(T/AE) yields the thrust reaction load on the piping system subject to the assumption that the vapor to liquid velocity ratio is unity. By conservation of forward momentum, the jet force per unit area (F_j/A_E) equals the thrust force per unit area (T/AE). To determine the effect of the fluid jet on targets located some distance LT from the break, the following procedure is used.

Classify target distance LT as less than, equal to, or greater than the distance required for full jet expansion L_∞. See Figure 3.6-91.

where

$$L_\infty = \frac{D_E}{2}\left[\left(\frac{A_\infty}{A_E}\right)^{1/2} - 1\right] \qquad (3.6\text{-}26)$$

$$\frac{A_\infty}{A_E} = \left[\frac{G_E{}^2}{g_c}\right]\left[\frac{\bar{v}_\infty}{T / A_E}\right] \qquad (3.6\text{-}27)$$

where

A_∞	= area of jet at full expansion	ft^2
A_E	= area of exit	ft^2
D_E	= diameter of exit	ft
G_E	= mass flux	$lb_m/sec\ ft^2$
g_c	= Newton's Constant	$32.174 \frac{ft - lb_m}{lb_f\ sec^2}$
h_E	= exit plant enthalpy	Btu/lb
L_∞	= distance to full expansion	ft

P_∞ = receiver pressure lb_f/ft^2

T = thrust

$\overline{V}_\infty$ = specific volume at full expansion

Assuming the kinetic energy of the fully expanded jet to be insignificant, the following relation holds between vessel stagnation enthalpy and fully expanded jet enthalpy:

$$h_o = h_\infty \tag{3.6-28}$$

Therefore,

$$x_\infty = \frac{h_o - h_{f_\infty}}{h_{fg_\infty}} \tag{3.6-29}$$

where

h_o = stagnation enthalpy at full expansion, Btu/lb

h_{f_∞} = liquid enthalpy at full expansion, Btu/lb

h_{fg_∞} = vaporization enthalpy at full expansion, Btu/lb

X_∞ = quality at full expansion

then,

$$\overline{V}_\infty = \overline{V}_{f_\infty} + X_\infty \overline{V}_{fg_\infty} \tag{3.6-30}$$

where

$\overline{V}_{f_\infty}$ = specific volume of liquid at full expansion, ft^3/lb_m

$\overline{V}_{fg_\infty}$ = specific volume of vaporization at full expansion ft^3/lb_m

$\overline{V}_\infty$ = specific volume at full expansion, ft^3/lb_m

From Equations 3.6-29 and 3.6-30, subject to the assumption of Equation 3.6-28, Equations 3.6-26 and 3.6-27 can be solved for L_∞.

For $L_T < L_\infty$ property variations are assumed linear from A_E to A_∞ for area and from P_E to P_∞ for pressure.

The jet impingement load F_j is as follows with F_j a constant:

$$F_{jT} = F_j \times \frac{A_T}{A_L} \tag{3.6-31}$$

where

A_T = area of target which is intercepted by the jet

A_L = jet area at the target distance calculated as

in Region 1: for $O < L < L_\infty$

$$A_L = \left(A_\infty - A_E\right)\frac{L_T}{L_\infty} + A_E \tag{3.6-32}$$

in Region 2: for $L_\infty \le L \le 1/2\left[\sqrt{\frac{4A_\infty}{\pi}} - D_E\right] \cot 10^\circ$

$A_L = A_\infty$

where

$$L_3 = 1/2\left[\left(\frac{4A_\infty}{\pi}\right)^{1/2} - D_E\right] \cot 10^\circ \tag{3.6-33}$$

in Region 3: for $1/2\left[\sqrt{\frac{4A_\infty}{\pi}} - D_E\right] \cot 10^\circ < L < \infty$

$$A_L = A_E\left(1 + \frac{2_L}{D_E}\tan 10^\circ\right)^2 \tag{3.6-34}$$

for nonflashing/nonexpanding fluids:

$$A_L = A_E \quad (3.6\text{-}35)$$

3.6.2.3.2 Jet Impingement Effect

3.6.2.3.2.1 Physical Separation. The physical separation of different essential systems and components is used to ensure that the plant retains function of sufficient essential systems to ensure safe shutdown in the event of a postulated LOCA and subsequent generation of a jet stream together with an additional single random active component failure and the loss of offsite power.

Where physical separation cannot be used to protect systems, a detailed analysis is performed to determine the effects of jet impingement on their operability. If necessary, barriers are provided to protect structures, systems, and components required for a safe shutdown to prevent offsite radiological consequences and to mitigate the effects of a LOCA.

3.6.2.3.2.2 Jet Impingement Evaluation. The evaluation of the adequacy of physical separation included the inspection of all essential systems and their components that are necessary to start, operate, and control the essential systems required for safe shutdown. The evaluation included the following:

a. Review pipe break locations to provide conservative jet stream orientation and geometry,

b. Review effected equipment by both design drawing examination and plant walkdown,

c. Review signals that result in the actuation of essential systems,

d. Review signals that are necessary to be returned to inside primary containment, to activate the shutdown systems,

e. Review availability of power that is required inside primary containment to operate the essential systems, and

f. Review mechanical engineered safety systems required for safe shutdown.

3.6.2.3.2.3 Postulated Pipe Rupture Locations Inside Containment. The criteria used to define pipe rupture locations is described in Section 3.6.2.1. Figures 3.6-32 through 3.6-56 show the inside containment break locations resulting from the application of the criteria provided in Section 3.6.2.1. Pipe whip restraint locations are also shown in these figures.

3.6.2.3.2.4 Signals From Primary Containment. For instrumentation located inside primary containment, sufficient redundancy is provided such that all signals necessary to cause actuation of essential systems remain functional. Each system that is required to bring the plant to a safe shutdown condition is furnished with two or more sets of redundant instrumentation lines.

In this review, it is conservatively assumed that a jet stream or whipping pipe may damage one of these sets. The redundant system is shown to remain operational by physical separation and barriers, such as the RPV. An example of the above is the location of sets A and B instrumentation lines for the HPCS. Set A and its redundant set B are located at opposite sides of the RPV. Therefore, a jet stream or whipping pipe cannot damage both sets of instrumentation. Function of instrumentation inside primary containment necessary to result in the actuation of the HPCS system is thereby ensured. These conditions as discussed for the HPCS instrumentation lines are typical for all instrumentation lines that support essential systems. The capabilities of redundant instrumentation is discussed in Section 7.3.

3.6.2.3.2.5 Signals to the Primary Containment. No instrumentation signal is necessary to return inside primary containment to operate any of the essential systems. Signals to the ADS valves are provided through their power supply as described in the following section.

3.6.2.3.2.6 Power Requirement Inside Primary Containment. The only essential system that requires power inside primary containment is the ADS.

There are 18 main steam relief valves inside primary containment, seven of which are in the ADS mode. These seven valves will quickly depressurize the RPV in the event of a small break and allow the LPCS or the LPCI to keep the core covered with water, thus permitting the reactor to be brought to a safe shutdown.

There are two independent and redundant electrical systems (divisions) inside primary containment which operate the ADS valves. The divisions are run separately in main paths of conduits, and individual conduits are branched to corresponding ADS valves.

Each ADS valve is equipped with three solenoids and two divisions as noted above. Power to the ADS valves is required to open a solenoid valve connected to the air accumulator, thus allowing the pressurized air to open the ADS valves.

The physical arrangement of the electrical conduits is such that one division runs next to the primary containment vessel wall and the other division runs around the sacrificial shield wall. The conduits for Division 1 (A solenoids) are routed above the platform at el. 541 ft in a horizontal configuration, running toward penetration X-105C. The conduits for Division 2 (B solenoids) are routed below the platform at el. 522 ft in a horizontal configuration, running toward penetration X-105B. The conduits are routed such as to take advantage of the piping

and structure for protection against a possible jet impingement. The ADS supply lines are discussed in Section 7.3.

Six out of the seven furnished ADS valves have to be operational to enable adequate depressurization of the RPV. Jet impingement cannot incapacitate more than three electrical lines. Since four lines would have to be incapacitated to incapacitate more than one valve, safety is ensured.

This condition is typical for all conduits leading to the ADS valves.

3.6.2.3.2.7 Mechanical Engineered Safety Systems. Under conditions involving a LOCA, a loss of offsite power, and the failure of any one diesel generator, the availability of redundant essential systems is determined by study of design drawings and by field walkdown of the physical location of these systems to verify that sufficient separation is provided between two redundant systems. Specifically, two situations are investigated:

a. The possibility of a jet from an essential system destroying or in any way damaging its redundant system. For example, in the case of failure of Division 2 diesel generator, the possibility of a pipe whip or jet from the HPCS damaging the LPCS and ADS is investigated; and

b. The possibility of a jet, from a high energy line, being capable of damaging an essential system and its redundant system. For example, in the event of Division 2 diesel generator failing, in conjunction with a possible jet or pipe whip from the RCIC, which may be capable of damaging the LPCS, ADS, HPCS, or related systems, thus preventing the plant from being brought to a safe shutdown is investigated.

All essential systems are examined to ensure that they will be capable of performing their required function after a jet impingement.

3.6.2.3.2.8 Jet Impingement on Major Structures Inside Primary Containment. Jet impingement loading on the steel primary containment vessel is discussed in Section 3.8.2. Jet impingement loading on the concrete and steel internal structures of the steel primary containment vessel is discussed in Section 3.8.3. Jet impingement loading on primary containment penetrations is discussed in Section 3.8.6.

3.6.2.3.3 Pipe Whip Restraints

3.6.2.3.3.1 Definition of Function. Pipe whip restraints, as differentiated from piping supports, are designed to function and carry load for an extremely low probability gross failure in a piping system carrying high energy fluid. The piping integrity does not depend on the pipe whip restraints for any loading combination. If the piping integrity is compromised by a

pipe break, the pipe whip restraint acts to limit the movement of the broken pipe to an acceptable distance. The pipe whip restraints (i.e., those devices which serve only to control the movement of a ruptured pipe following gross failure) will be subject to a once in a lifetime loading. The pipe break event is considered to be a faulted condition for the piping system, its restraints, and structure to which the restraint is attached. The design and analysis of these components for this event are described later in this section and in Section 3.6.2.2. Piping is no longer considered to be a part of the RCPB following the break. Plastic deformation of the pipe is considered as a potential energy absorber. Piping systems are designed so that plastic instability would not occur in the pipe under design dynamic and static loads if the consequences of such instability could result in the loss of the primary containment integrity or loss of required plant shutdown capability.

3.6.2.3.3.2 Pipe Whip Restraint Features. The restraints are close to the pipe to minimize the kinetic energy of impact and yet are sufficiently removed from the pipe to permit unrestricted thermal pipe movement.

To facilitate ISI of piping, the restraints are generally located a suitable distance away from all circumferential welds and are of bolted construction so as to be removable.

Pipe whip restraint structures fall into one of the following two categories:

a. Energy absorbing members: These are modeled as elastic, elastoplastic, or plastic springs in a dynamic analysis. The required resistant (strength) of these structures is derived by application of the principles of structural dynamics; or

b. Load transmitting members: These are relatively stiff components and are modeled as rigid members in the dynamic analysis. Their function is to transmit loading from the source to foundation. The load due to the postulated pipe rupture is in the form of an equivalent static load and is derived as a result of the dynamic analysis performed for the energy absorbing members.

Energy absorbing members are ductile structures such as simple beams, frames, and ring girders (including the piping system itself) having the capability to deflect significantly in absorbing the energy imparted to them by a postulated broken pipe. For loading conditions including the effects of postulated pipe rupture, these members are designed within the limits for inelastic systems as stated in Table F1322.2-1 of ASME Boiler and Pressure Vessel (B&PV) Code Section III, 1974 Editions, Summer 1974 Addenda, Appendix F, “Rules for Evaluation of Faulted Conditions” adjusted to account for rapid strain rate effects as discussed in Section 3.6.2.2.3. These members are constructed to meet the requirements of Quality Class I structures.

The U-bar straps, as shown in Figure 3.6-21 and described in Section 3.6.2.2.3.2, act as nonlinear energy absorbing, nonrebounding, plastic springs. The U-bar straps are justified by empirical data, as described in Sections 3.6.2.2.2.2 and 3.12.33.

Load transmitting members are rigid components such as clevises, brackets or pins, rigid pipe whip restraint weldments as shown in Figure 3.6-22, or similar components; as well as major structures such as the drywell diaphragm floor, primary containment vessel, reactor pedestal, reactor building and foundation. For loading conditions, including the effects of postulated pipe rupture, the members in Figure 3.6-22 are designed within the limits stated in Table F1322.2-1 of ASME Code Section III, Appendix F, "Rules for Evaluating Faulted Condition" for components and component supports; except that the members beyond those included in the dynamic analytical model (i.e., reactor pedestal, reactor building, as well as certain steel members assumed to be infinitely rigid) are designed to AISC, ACI, and other appropriate structural component criteria. All these members are constructed to the requirements of Quality Class I structures.

The design limits for connecting members such as clevises, brackets, and pins per Figure 3.6-21 are based on the following stress limits:

a. Primary stresses (in accordance with definitions in ASME Section III) are limited to the higher of

   1. 70% of Su, where Su = minimum ultimate strength by tests or ASTM specification, and

   2. Sy + 1/3 (Su - Sy), where Sy = minimum yield strength by test or ASTM specification; or

b. Recommended stress limits in accordance with ASME Code Section III, Subsection NF, for faulted conditions, if applicable. The design limits for welds of connecting members to steel structures are based on the following stress limits: the maximum primary weld stress intensity (two times shear stress) is limited to three times AWS or AISC building allowable weld shear stress.

The recirculation pump discharge and suction piping utilizes the U-bar strap pipe whip restraints (Figure 3.6-21), while all other systems listed in Table 3.6-15 use rigid types as shown in Figure 3.6-22 or similar configurations.

Typical installations of pipe whip restraints are shown in Figures 3.6-23, 3.6-24, and 3.6-92 through 3.6-95.

3.6.2.3.3.3 Pipe Whip Restraint Loading. For the purpose of predicting the pipe rupture forces associated with the reactor blowdown, the local line pressures are assumed to be those

normally associated with the reactor operating at ≥ 105 % of rated power and with a vessel dome pressure of 1040 psig.

In calculating pipe reaction, credit is taken for any line restriction and line friction between the break and the pressure reservoir. The following represent typical restrictions to flow which are specifically considered:

a. Jet pump nozzles,
b. Core spray nozzles (inside internals shroud),
c. Feedwater sparger, and
d. Steam line flow limiter.

The hydraulic bases and calculational techniques for predicting unbalanced forces on a pipe associated with a postulated instantaneous pipe rupture are as discussed in Section 3.6.2.

The dynamic loading on the pipe whip restraint commences at the effective time of impact of the pipe with the restraint. It includes the following:

a. Unbalanced force on the pipe associated with a postulated instantaneous pipe rupture in the form of a suddenly applied force; and

b. Dynamic inertia load of the moving section of pipe which is accelerated by the unbalanced force associated with the pipe rupture and collides with the restraint. This load is in the form of kinetic energy of impact.

3.6.2.3.4 Pipe Whip Effects on Safety-Related Components

Pipe whip (displacement) effects on safety-related structures, systems, and components can be placed in two categories: (a) pipe displacement effects on components (nozzles, valves, tees, etc.) which are in the same piping run in which the break occurred and (b) controlled pipe whip displacements as they apply to external components such as building structure, other piping systems, cable trays, and conduits.

3.6.2.3.4.1 Pipe Displacement Effects on Components in Same Piping Run. The criteria which is used for determining the effects of pipe displacements on inline components are as follows:

a. Components such as vessel safe ends and valves which are attached to the broken piping system and do not serve a safety function or whose failure would not further escalate the consequences of the accident, need not be designed to meet ASME Code Section III imposed requirements for essential components under faulted loading, and

b. If these components are required for safe shutdown, or serve a safety function to protect the structural integrity of an essential component, the code requirements for faulted conditions and limits to ensure operability, if required, are met.

The methods used to calculate the pipe whip loads on piping components in the same run as the postulated break are described in Section 3.6.2.2.2.

3.6.2.3.4.2 Pipe Displacement Effects on Structures, Other Systems, and Components. The criteria which are used for determining the effects of pipe displacements on structures, other systems, and components are as follows:

a. Systems and components which do not serve a safety function or whose failure would not further escalate the consequences of the accident, need not be designed to meet ASME Code Section III imposed requirements for essential components under faulted loading;

b. Systems and components that serve a safety function but are not required to mitigate the consequences of the postulated accident including consideration of random active component failure, are not required to be designed to meet the ASME Code Section III requirements for essential components under faulted conditions;

c. Systems and components, which do serve a safety function and which are required to mitigate the consequences of the particular postulated accident, are located such that the displaced pipe will not come in contact with these systems and components. In areas where this is not feasible, and contact is possible, the components are designed to meet the ASME Code requirements for faulted conditions; and

d. Pipe whip effects on structures are discussed in Section 3.6.2.3.3.2. Structural deflections resulting from pipe whip are covered in Section 3.6.2.2.2.2c.

The methods used to calculate the pipe whip loads are described in Section 3.6.2.2.2.

3.6.2.4 Guard Pipe Assembly Design Criteria for Dual Barrier Containment

The containment structure does not utilize dual barriers, guard pipes, or other protective devices that limit the pressurization of the space between the two barriers. The use of guard pipes is restricted to type 1 penetration assemblies (see Figure 3.8-54) as described in Section 3.8.6.1.1.

3.6.2.5 Implementation of Criteria for Pipe Whip and Jet Impingement Protection

The effects of jet impingement are discussed in Section 3.6.2.3.2. The implementation of criteria for pipe whip protection is discussed in the following.

3.6.2.5.1 Piping Systems Outside Primary Containment

Studies are performed as described in Section 3.6.1 to ensure that in the event of a postulated pipe rupture, sufficient equipment remains functional to mitigate the consequences of the particular pipe rupture, including considerations of failure of a single random active component. The study indicates that pipe whip supports are required within the main steam tunnel and to protect normally open isolation valves that are required to close. Pipe whip protection requirements in the main steam tunnel are discussed in Section 3.6.2.5.4.11.

Pipe whip protection requirements for isolation valves are discussed in Section 3.6.2.5.3.6.

3.6.2.5.2 Piping Systems Inside Primary Containment

High-energy piping systems inside primary containment subject to postulated pipe rupture are tabulated in Table 3.6-15. Specific criteria for determination of break locations and dynamic effects associated with the postulated rupture of piping are discussed in Section 3.6.2.1. The function and features of pipe whip restraints are discussed in Section 3.6.2.3.3. Equipment and system requirements subsequent to a postulated pipe rupture in a fluid system are discussed in Section 3.6.2.5.3.

Pipe whip restraints are furnished when it is necessary to limit pipe movements resulting from a postulated break, which could otherwise cause unacceptable damage to equipment necessary to mitigate the consequences of the particular postulated pipe rupture, including considerations of a single random active failure. For high-energy piping inside primary containment, this includes the following:

a. Assurance of primary containment leaktightness,

b. Assurance that potential for damage is such that the maximum pipe break areas and/or combinations of pipe break areas do not exceed the values described in Section 3.6.2.5.3.2 so that emergency core cooling systems (ECCS) capability is not impaired,

c. Assurance that the CRD system maintains sufficient function to ensure reactor shutdown,

d. Assurance that there is sufficient capability to maintain the reactor in a safe shutdown condition.

The criteria used to define pipe rupture locations for piping systems discussed in Section 3.6.2.5.4 follows Section 3.6.2.1.1.1.

Figures 3.6-32 through 3.6-56 show the piping configurations for each high energy system inside primary containment and include numerical identification of all significant points of interest in the piping system, locations of pipe whip supports, and postulated pipe break locations. The pipe whip supports are identified by the acronym PWS followed by an identification number on Figures 3.6-32 through 3.6-54 and as noted in Figure 3.6-55.

3.6.2.5.3 System Requirements Subsequent to Postulated Pipe Rupture

3.6.2.5.3.1 Control Rod Insertion Capability. To maintain the ability to insert the control rods in the event of a pipe break, no more than one in any array of nine CRD withdrawal lines may be completely crimped (totally blocked). Complete severance of withdrawal lines does not affect the rod insert function. Protection of the CRD insert lines is not required since a reactor pressure of 450 psig or higher can adequately insert the control rods, and no postulated pipe break resulted in severance or total crimping of the CRD insert or withdrawal lines. (See Reference 3.6-23.)

3.6.2.5.3.2 Core Cooling Requirements. The designed ECCS capability can be maintained provided that dynamic effects consequences do not exceed the following break area, break combination, and maintenance of minimum core cooling requirements.

3.6.2.5.3.3 Maximum Allowable Break Areas. For breaks involving recirculation piping, the total effective area of all broken pipes, including the effective area of the recirculation line break, does not exceed the total effective area of the design-basis double-ended recirculation line break. By limiting the total area of all broken pipes involving recirculation loops to an area less than or equal to that of the design basis accident (DBA) (circumferential break of recirculation loop), no accident can be more severe than the DBA.

For breaks not involving recirculation piping, the total effective area of all broken pipes for a given system shall not exceed the total effective area of the double-ended break of the maximum area pipe connected to the reactor boundary for that system.

3.6.2.5.3.4 Break Combinations. In addition to the pipe break area restrictions, breaks involving one recirculation loop do not result in loss of function or damage to the other recirculation loop or loss of coolant from the other loop in excess of that which can result from a break of the attached cleanup connection on the suction side of the loop.

3.6.2.5.3.5 Required Cooling Systems. To ensure compliance with Appendix A of 10 CFR Part 50, General Design Criteria, the cooling system requirements after an additional single active safety system failure are defined in Table 6.3-3. Cases which do not meet the

requirements in Table 6.3-3 must be assessed on an individual basis to determine compliance with core cooling requirements.

3.6.2.5.3.6 Containment System Integrity. The following were considered in addressing the LOCA dynamic effects with respect to containment system integrity.

Leaktightness of the containment fission product barrier is ensured throughout any LOCA.

For those lines which penetrate the containment and are closed during normal operation, the inboard isolation valves are as close as practicable to the RPV. This arrangement reduces the length of pipe subject to a pipe break.

Pipe whip supports are provided in the vicinity of normally open isolation valves inside and outside primary containment for high energy systems to ensure that operability of these valves remains unimpaired during a postulated pipe rupture event.

3.6.2.5.4 System by System Description of Pipe Whip Protection

3.6.2.5.4.1 Main Steam System.

System Arrangement

The main steam system consists of four 26-in. lines which are arranged inside primary containment with mirror image symmetry about the 0° and 180° north-south azimuth. The lines exit the RPV on opposite sides of primary containment and drop down vertically in two parallel pairs to the main steam relief valve platform at el. 541 ft where they are routed horizontally in parallel in the northeast and northwest quadrants to the 0° north azimuth. At this point, the four lines drop vertically in parallel to an elevation just above the diaphragm floor. The MSIVs are located here. The four lines exit the containment nearest the north azimuth at el. 500 ft (approximately). The two feedwater piping loops are described in Section 3.6.2.5.4.2 and are routed near the main steam lines.

Pipe Whip Protection

The postulated pipe breaks and pipe whip restraints for the four main steam lines are shown in Figures 3.6-32 through 3.6-35. Where pipe breaks are postulated inside primary containment, the main steam lines are restrained to prevent the unacceptable motion of these pipes. These restraints are mounted on the side of the sacrificial shield wall structure, as well as on radial beams which extend from the sacrificial shield wall to the primary containment vessel wall. A sliding beam seat at the primary containment wall, permits the beam to grow axially and also permits the primary containment wall to move relative to the sacrificial shield wall.

A structural steel frame (see Figure 3.6-57) between the drywell diaphragm floor and the containment vessel, in the area of the MSIVs, is provided for mounting of pipe whip restraints. The structure is designed with vertically sliding connections at the containment vessel to allow for differential thermal expansion between the containment vessel and the diaphragm floor.

Verification of Pipe Whip Protection Adequacy

Sufficient pipe whip protection is provided for the main steam system to ensure safety as defined in Section 3.6.2.5.2. The pipe whip restraints limit the pipe whip motion of the main steam lines to prevent impact and rupture of the adjacent feedwater lines which would otherwise result in a break area in excess of the ECCS capability. Impact with the CRD piping is prevented by pipe whip restraints at the main steam relief valve platform and separation. The CRD piping bundles are routed below the el. 541 ft main steam relief valve platform, a considerable distance away from where the main steam lines drop down to the diaphragm floor.

3.6.2.5.4.2 Reactor Feedwater System (Inside Primary Containment).

System Arrangement

The reactor feedwater system inside primary containment consists of two piping loops symmetrically arranged with respect to 0° and 180° north-south azimuth. The two piping loops emerge from each side of the reactor as three 12-in. vertical risers which drop down and join a header at the main steam relief valve platform. The header is routed parallel to and outside of the main steam lines, increasing in diameter from 12 in. to 18 in. and to 24 in. as it approaches the 0° north azimuth. At this location, the two 24-in. feedwater pipes drop down to 12 ft 6 in. above the diaphragm floor. The pipe is furnished with a check valve in each line in the short horizontal run near the primary containment vessel penetration.

Pipe Whip Protection

The postulated pipe breaks and pipe whip restraints for both reactor feedwater loops are shown in Figures 3.6-36 and 3.6-37. The feedwater lines are restrained to provide protection from the results of all postulated pipe breaks. Specifically, protection is provided where the resulting pipe motion would otherwise impact equipment necessary to mitigate the consequences of the break causing unacceptable damage to that equipment. The restraints are mounted on the side of the sacrificial shield wall, on radial beams at the el. 541 ft. main steam relief valve platform, and on a specially designed structure between the containment and diaphragm floor as shown in Figure 3.6-57. Special features of these structures are described in Section 3.6.2.5.4.1.

Verification of Pipe Whip Protection Adequacy

Sufficient pipe whip protection is provided for the reactor feedwater system to ensure safety as defined in Section 3.6.2.5.2.

In all cases the pipe is sufficiently restrained to prevent impact with containment or impact with other piping systems that would result in violation of pipe break area or pipe break combination limitations. Impact with the CRD piping is prevented by pipe whip restraints at the main steam relief valve platform and separation. The CRD piping bundles are routed below the el. 541 ft. main steam relief valve platform at a considerable distance away from the 0° north azimuth where the 24-in. feedwater lines drop to 12 ft 6 in. above the diaphragm floor. In two cases, portions of the 12-in. vertical risers are restrained in only one direction, allowing impact with one main steam relief valve. This constitutes acceptable damage because depressurization can be accomplished with one valve not functioning. Furthermore, the HPCS is available as a redundant system.

3.6.2.5.4.3 Reactor Water Cleanup System.

System Arrangement

The RWCU system consists of two 4-in. lines which branch from the two reactor recirculation cooling (RRC) pump suction lines located near the 0° and 180° north and south azimuths. The two lines are routed along the diaphragm floor at approximate el. 500 ft. to azimuth 67° where they join into one 6-in. pipe. This 6-in. pipe branches off into two segments. One branch rises to el. 538 ft just below the main steam relief valve platform. It is then routed to azimuth 150° where it exits primary containment. An isolation valve is located inside primary containment near the penetrations. The other 6-in. segment reduces to a 4-in. pipe and then rises to el. 514 ft and terminates at the 2-in. RPV drain system.

Pipe Whip Protection

The postulated pipe breaks and pipe whip restraints for the RWCU system are shown in Figure 3.6-38. At all locations where pipe breaks are postulated inside primary containment, the RWCU system is restrained to prevent unacceptable motion of the pipe. Where the pipe is routed along the diaphragm floor, restraints are mounted on special structures built up from the floor. Where the pipe is routed below main steam relief valve platform, restraints are mounted on intermediate structures between radial beams.

Verification of Pipe Whip Protection Adequacy

Sufficient pipe whip protection is provided for the RWCU system to ensure safety as defined in Section 3.6.2.5.2. Pipe whip restraints located above the diaphragm floor are designed to prevent impact with the floor, which might impair steam quenching capability of the

suppression pool. Pipe whip restraints located directly below the main steam relief valve platform prevent impact with CRD piping and also primary containment. Equipment necessary to mitigate RWCU pipe breaks, such as ADS system, core spray, LPCI, is protected by separation.

3.6.2.5.4.4 Standby Liquid Control Piping.

System Arrangement

The SLC system includes a section of 1.5-in. piping connected to a short length of 4-in. piping which is connected to HPCS-V-76. The 1.5-in. piping is routed through check valve SLC-V-7 and then downward to penetration X-13. SLC-V-7 limits the high energy portion of the system to approximately 18 in. of piping.

Pipe Whip Protection

The postulated pipe breaks for the SLC system are shown in Figures 3.6-39 and 3.6-48. Pipe whip restraints are not required for this system.

Verification of Pipe Whip Protection Adequacy

Sufficient pipe whip protection is provided for the SLC system to ensure safety as defined in Section 3.6.2.5.2. In the event of a pipe whip resulting from a pipe rupture at any postulated location, the piping system does not damage equipment or systems required for safe shutdown of the reactor. Therefore, pipe restraints are not required for this system.

3.6.2.5.4.5 Residual Heat Removal System - Shutdown Cooling Supply and Return Piping.

System Arrangement

The RHR shutdown cooling supply and return piping consists of two 12-in. piping loops and one 20-in. loop, with all three branching from the RRC piping at the el. 512 ft platform. All three loops are routed primarily in a horizontal plane below the 512 ft platform from the RRC pipe to its primary containment penetration. There is a normally closed valve in each loop located as close as possible to the high energy source, thereby limiting the portion of each loop considered high energy on the basis defined in Section 3.6.2.1.

Pipe Whip Protection

The pipe whip restraints for the RHR shutdown cooling supply and return system are shown in Figures 3.6-43, 3.6-44, and 3.6-45. Where pipe breaks are postulated inside primary containment, the lines are restrained to prevent the unacceptable motion of these pipes. For the two 12-in. shutdown cooling return loops restraints are mounted on intermediate structures

between the radial beams in the el. 512 ft platform. The radial beams extend from the reactor pedestal to the primary containment wall. A sliding beam seat at the primary containment wall permits differential thermal expansion between the containment vessel and reactor pedestal. Restraints for the 20-in. cooling return loop are mounted on a specially designed structure between the diaphragm floor and radial beams in the el. 512 ft platform as shown in Figure 3.6-95.

Verification of Pipe Whip Protection Adequacy

Sufficient pipe whip protection is provided for the RHR shutdown cooling supply and return system to ensure safety as defined in Section 3.6.2.5.2.

For the two 12-in. shutdown cooling return loops, pipe whip restraints are provided to prevent impact with primary containment wall and the diaphragm floor. The pipe whip restraints also prevent impact with the CRD piping bundles located above the el. 512 ft. platform. The ECCS system and the ADS systems are protected by separation, being located at higher elevations.

For unrestrained sections of this system, analysis shows a plastic hinge does not develop at the recirculation pipe, and pipe whip does not occur.

For the 20-in. shutdown cooling supply loop, pipe whip restraints are provided to prevent impact with primary containment and the diaphragm floor. Impact with the CRD piping is precluded by a 90° separation from both CRD piping bundles.

3.6.2.5.4.6 Reactor Core Isolation Cooling Reactor Pressure Vessel Head Spray System.

System Arrangement

The RPV head spray system is a 6-in. line that originates at the top of the RPV dome. After a 2-ft vertical riser and a 2-ft horizontal run, there is a normally closed valve that limits the high energy portion of this system to a total length of 4 ft.

Pipe Whip Protection

The postulated pipe breaks for this system are shown in Figure 3.6-46. A pipe whip restraint is provided to prevent RCIC head spray line impact on the containment head as a result of the postulated break locations.

Verification of Pipe Whip Protection Adequacy

Sufficient pipe whip protection is provided to ensure safety as defined in Section 3.6.2.5.2. The location of the normally closed valve limits the high energy section of this system as steel

pads welded to the containment vessel head have been provided to distribute the impact load and prevent direct impact with the containment vessel head.

3.6.2.5.4.7 Low-Pressure and High-Pressure Core Spray Piping.

System Arrangement

The LPCS and HPCS are 12-in. piping systems with similar arrangements inside primary containment. They originate at el. 561 ft from the reactor at azimuths 120° and 240° respectively and drop vertically to an elevation just below the main steam relief valve platform where there is an expansion loop in a horizontal plane leading to a penetration through primary containment. In the vertical section, there is a normally closed check valve located as close as possible to the reactor, thereby limiting the portion of piping in both systems considered high energy under the definition given in Section 3.6.2.1.

Pipe Whip Protection

The postulated pipe breaks and pipe whip restraints for the LPCS and HPCS systems are shown in Figures 3.6-47 and 3.6-48. Where pipe breaks are postulated inside primary containment the two lines are restrained to prevent the unacceptable motion of these pipes. These restraints are mounted directly onto the sacrificial shield wall.

Verification of Pipe Whip Protection Adequacy

Sufficient pipe whip protection is provided for the LPCS and HPCS systems to ensure safety as defined in Section 3.6.2.5.2. Pipe whip restraints are provided to limit pipe movement resulting from postulated pipe breaks to prevent impact with primary containment and adjacent RHR/LPCI piping. Impact on safety/relief valves (SRVs) resulting from postulated pipe breaks in the HPCS system, is precluded by sufficient separation between these two redundant depressurization methods. The CRD piping bundles are separated by sufficient distance from the high energy sections of the LPCS and HPCS systems.

3.6.2.5.4.8 Residual Heat Removal Condensing Mode and Reactor Core Isolation Cooling Turbine Steam Supply System.

System Arrangement

The RHR condensing mode has been deactivated. All system piping outboard of containment isolation valve RCIC-V-64 has been deactivated and is no longer in use. RCIC-V-64 has been locked closed and the motor operator disconnected. The piping inboard of RCIC-V-64 remains pressurized during plant operation.

The inboard system consists of a 10-in. piping loop which branches off a main steam line at el. 551 ft 2.25 in. and azimuth 105°. An expansion loop in the horizontal plane leads to a penetration through primary containment at el. 550 ft and azimuth 120°.

The RCIC turbine steam supply system consists of a 4-in. line which branches off the 10-in. inboard RHR condensing mode line at approximately azimuth 125° and drops down to el. 532 ft below the main steam relief valve platform. The line is then routed horizontally to a penetration through primary containment at azimuth 35°.

Pipe Whip Protection

The postulated pipe breaks and pipe whip restraints for the inboard RHR condensing mode and RCIC turbine steam supply systems are shown in Figure 3.6-49. Where pipe breaks are postulated inside primary containment, this piping is restrained to prevent unacceptable motion of the piping. The restraints for these two systems are mounted on specially designed structures which tie into the sacrificial shield wall and/or radial beams of the main steam relief valve platform.

Verification of Pipe Whip Protection Adequacy

Sufficient pipe whip protection is provided for the inboard RHR condensing mode and RCIC turbine steam supply systems to ensure safety as defined in Section 3.6.2.5.2. For the 10-in. inboard RHR condensing mode system, pipe whip restraints are provided at all locations where pipe breaks are postulated. The pipe whip restraints limit pipe motion resulting from postulated break to prevent impact with primary containment vessel wall, the HPCS system, and the main steam SRVs. Protection is required since either the ADS or the HPCS are required to depressurize the reactor subsequent to a pipe break in a line with a cross-section area less than 0.7 ft^2 (see Section 3.6.2.5.3).

For the 4-in. RCIC turbine steam supply, restraints are provided for the portion above the main steam relief valve platform to protect containment and the HPCS and SRVs. For the section of this system below the main steam relief valve platform, the pipe movement resulting from postulated breaks will move radially inward impacting the sacrificial shield or vertically down impacting the el. 512 ft platform. The CRD piping bundle in this area is located above this line precluding impact.

3.6.2.5.4.9 Main Steam Valve Drainage Piping.

System Arrangement

The main steam valve drainage piping consists of four 2-in. pipe lines, each originating at the bottom of the four MSIVs inside primary containment. The four lines are routed above the

diaphragm floor joining into one 3-in. line which then exits containment. Isolation valves are located just inside and just outside of the primary containment penetration.

Pipe Whip Protection

The postulated pipe breaks and pipe whip restraints for this system are shown in Figure 3.6-50. Where pipe breaks are postulated the system is restrained to prevent unacceptable motion of the main steam valve drainage piping. A number of the pipe whip restraints for this system are mounted on specially designed structures built up from the diaphragm floor. The remaining restraints are attached to the structure between primary containment and the diaphragm floor (see Section 3.6.2.5.4.1), which has been designed to support the main steam and reactor feedwater pipe whip restraints.

Verification of Pipe Whip Protection Adequacy

Sufficient pipe whip protection is provided for the main steam valve drainage piping to ensure safety as defined in Section 3.6.2.5.2. Pipe whip restraints are provided for this system to protect primary containment structure and the diaphragm floor. Other required safety systems are protected by separation by being located at considerably higher elevations.

3.6.2.5.4.10 Main Steam Reactor Pressure Vessel Head Vent System.

System Arrangement

The RPV head vent system consists of a 2-in. line which originates at the top of the RPV dome and is routed through the primary containment bulkhead plate at azimuth 237°. The line is then routed below the bulkhead plate, to azimuth 70° where it drops down to el. 570 ft and joins a 26-in. main steam line.

Pipe Whip Protection

The postulated pipe breaks and pipe whip restraints for this system are shown in Figure 3.6-51. For the piping section above the bulkhead plate, the pipe whip restraints are mounted onto a removable lattice framework. For the portion of this line below the primary containment bulkhead plate, the restraints are mounted on structures, which tie into the stiffening beams for the bulkhead plate.

Verification of Pipe Whip Protection Adequacy

Sufficient pipe whip protection is provided for the RPV head vent piping to ensure safety as defined in Section 3.6.2.5.2. There are no safety-related systems in the vicinity of the RPV head vent piping and pipe whip restraints are provided to protect the primary containment structure.

3.6.2.5.4.11 Main Steam and Reactor Feedwater Piping Inside Main Steam Tunnel.

System Arrangement

The four 26-in. main steam and two 24-in. reactor feedwater lines inside the main steam tunnel originate at the primary containment penetrations and run horizontally to the end of the tunnel. At this point the six lines drop vertically and are then routed horizontally within the turbine generator building. An isolation valve is located in each line just beyond the penetration.

Pipe Whip Protection

The postulated pipe breaks and pipe whip restraints for the main steam and reactor feedwater lines inside the main steam tunnel are shown in Figures 3.6-53 and 3.6-54. Where breaks are postulated, the six lines are restrained to prevent unacceptable motion. The restraints are mounted on steel structures which then tie into the concrete walls and floors.

Verification of Pipe Whip Protection Adequacy

Sufficient pipe whip protection is provided for the main steam and reactor feedwater lines inside the main steam tunnel to ensure safety.

Pipe whip restraints are provided to prevent pipe whip impact with the main steam or feedwater isolation valves. In addition, impact with adjacent main steam or feedwater lines is prevented. See Figure 3.6-24.

3.6.2.5.4.12 Residual Heat Removal System - Low Pressure Core Injection.

System Arrangement

The RHR/LPCI piping consists of three 14-in. loops whose arrangement is the same for two loops with the third loop being the mirror image of the other two. The piping originates at the reactor vessel at el. 552 ft, rises vertically to el. 563 ft where there is a horizontal section with a check valve. This valve is normally closed, limiting the high energy portion of each loop. After the valve the normally unpressurized section of piping drops to an elevation just below the main steam relief valve platform where it is routed to a penetration through primary containment at el. 534 ft.

Pipe Whip Protection

The postulated pipe breaks and pipe whip restraints for the three RHR/LPCI mode piping loops are shown in Figures 3.6-40, 3.6-41, and 3.6-42. Where pipe breaks are postulated, the three piping loops are restrained to prevent unacceptable motion. The restraints for this system are

mounted onto the sacrificial shield wall and also on structures which tie back to the sacrificial shield wall.

Verification of Pipe Whip Protection Adequacy

Sufficient pipe whip protection is provided for the RHR/LPCI mode piping to ensure safety as defined in Section 3.6.2.5.2. The pipe whip restraints limit pipe motion resulting from postulated breaks to preclude impact with primary containment and adjacent feedwater or core spray piping. Impact with adjacent feedwater or core spray piping may result in pipe break escalation that can exceed limitations of pipe break area and pipe break combination. The CRD piping bundles are separated by a considerable distance from high energy sections of the RHR/LPCI mode piping.

3.6.2.5.4.13 Reactor Pressure Vessel Drain System.

System Arrangement

The RPV drain system is a 2-in. line that originates at the bottom of the RPV and is routed inside the pedestal to a sleeve which leads through the pedestal. Outside the reactor pedestal the line then joins the RWCU system.

Pipe Whip Protection

The postulated pipe breaks and pipe whip restraint for the RPV drain system are shown in Figure 3.6-52. At postulated pipe break locations inside primary containment, the RPV drain system is restrained to prevent unacceptable motion of the pipe. This system contains only one pipe whip restraint. Where the pipe is routed along the platform at el. 512 ft 8 in., the pipe whip restraint is mounted on a transverse beam which is welded to the top of the radial platform beams.

Verification of Pipe Whip Protection Adequacy

Sufficient pipe whip protection is provided for the RPV drain system to ensure safety as defined in Section 3.6.2.5.2. The single pipe whip support for the RPV drain system serves the dual purpose of providing pipe whip protection and seismic restraint. The pipe whip restraint is located above the platform at el. 512 ft 8 in., and is designed to prevent impact with the Quality Class I electrical conduits in the immediate vicinity of the RPV drain line. Since an annular clearance of only 1/16-in. is maintained between the pipe and the pipe whip support, the pipe whip support is also utilized as a rigid three-way support.

3.6.2.5.4.14 Reactor Recirculation Cooling System.

System Arrangement

The two A and B loops of the recirculation piping system consist of the pump discharge and suction piping as shown in Figure 3.6-55. The recirculation pump A and B discharge lines are arranged in a diametrically opposed manner, in the northern and southern segments, respectively, of primary containment. The A lines exit the RPV in five, equally spaced, 12-in. diameter lines commencing at azimuth 30° and ending at azimuth 150° (for B lines azimuth 210° to 330°). These five lines drop vertically alongside the sacrificial shield wall, from el. 536 ft 0 in. to a 16-in. diameter header at centerline el. 528 ft 0 in. A single 24-in. diameter line then drops vertically from the center of the header to el. 506 ft 3-7/8 in. where it is routed into the discharge nozzle of the recirculation pump.

The recirculation pump B and A suction lines are oriented along the 0° and 180° azimuths, respectively, with respect to the RPV. Each suction line consists of a single 24-in. diameter line which exits the RPV at el. 535 ft 3/4 in. and drops vertically alongside the sacrificial shield wall to el. 502 ft 6-1/8 in. where it is routed to the suction nozzle of the recirculation pump.

Pipe Whip Protection

For the recirculation pump suction and discharge systems, the location of postulated pipe breaks and pipe whip restraints are shown in Figure 3.6-55 which is representative of both recirculation loops. Conformance of the postulated break locations with the criteria of Section 3.6.2.1.1.1 is demonstrated in Figure 3.6-56. Where pipe breaks are postulated inside primary containment, the recirculation system piping is restrained to prevent unacceptable motion. These restraints are generally mounted on the side of the sacrificial shield wall structure or the RPV pedestal immediately below. Four restraints, which are located near the diaphragm floor and are not near the sacrificial shield wall or the RPV pedestal, consist of saddle type structures mounted on the diaphragm floor.

Verification of Pipe Whip Protection Adequacy

Sufficient pipe whip protection is provided for the RRC system piping to ensure safety as defined in Section 3.6.2.5.2. Pipe whip restraints are provided to prevent impact with the diaphragm floor as well as to mitigate the consequences of a pipe rupture with respect to surrounding piping systems, structures, and components required for safe shutdown.

The physical separation of the recirculation system from the containment vessel precludes any damage that could result as a result of postulated pipe break.

3.6.3 REFERENCES

3.6-1 Biggs, J. M., Introduction to Structural Dynamics, McGraw-Hill, New York, 1964.

3.6-2 Hansen, R. J., Holley, M. J., Biggs, J. M., Namyet, S., Minami, J. K., Structural Design for Dynamic Loads, McGraw-Hill, New York, 1959.

3.6-3 System Criteria and Applications for Protection Against the Dynamic Effects of Pipe Break, General Electric, Nuclear Energy Division, Design Specification No. 22A 2625, Rev. 2, San Jose, California, June 15, 1973.

3.6-4 PDA-Pipe Dynamic Analysis Program for Pipe Rupture Movement, General Electric, Nuclear Energy Division, Report NEDE 10313.

3.6-5 Design Report, Recirculation System Pipe Whip Restraint for BWR/4, 218, 251 Mark I, and Mark II Product Line Plant, Sections 1, 2, and 3 only, General Electric, Specification No. 22A 4046.

3.6-6 Air Force Design Manual, Principles and Practices for Design of Hardened Structures, U.S. Dept. of Commerce, Office of Technical Services, Publication No. AD 295408, Technical Documentary Report No. AFSWC-TDR-62-138, Washington, D.C., December 1962.

3.6-7 ASCE Manual, Design of Structures to Resist Nuclear Weapons Effects, Manuals and Reports on Engineering Practice No. 42, American Society of Civil Engineers, New York, 1961.

3.6-8 Moody, F. J., Prediction of Blowdown Thrust and Jet Forces, American Society of Mechanical Engineers Paper No. 69-HT-31, New York, 1969.

3.6-9 Rettig, W. H., et al., "RELAP3: A Computer Program for Reactor Blowdown Analysis," IN-1321, U.S. Atomic Energy Commission Scientific and Technical Report, Reactor Technology TID-4500, Idaho Operations Office, June 1970.

3.6-10 G. E. Proprietary Report GE-NE-208-17-0993, Revision 1, General Electric Company, "WNP-2 Power Uprate Project NSSS Engineering Report," December 1994.

3.6-11 AISC, "Specification for Design, Fabrication, and Erection of Structural Steel for Buildings," American Institute of Steel Construction, New York, February 12, 1969.

3.6-12 ACI 318-71, "Building Code Requirements for Reinforced Concrete," American Concrete Institute, Detroit, Michigan, 1971.

3.6-13 Linderman, R. B., Rotz, J. V., Yeh, G. C. K., Design of Structures for Missile Impact, Bechtel Power Corporation, Topical Report BC-TOP-9A, Revision 2, San Francisco, California, September 1974.

3.6-14 Roark, R. J., Formulas for Stress and Strain, Fourth Edition, McGraw-Hill Book Company, Inc., New York, 1965.

3.6-15 Amarikian, A., Design of Protective Structures, Bureau of Yards and Docks, Department of the Navy, Report NP-3726, August 1950.

3.6-16 Moody, F. J., Maximum Flow Rate of a Single Component, Two-Phase Mixture, American Society of Mechanical Engineers Journal of Heat Transfer, pp. 134-142, February 1965.

3.6-17 Gwaltney, R. C., Missile Generation and Protection in Light-Water Cooled Power Reactor Plants, ORNL NSIC-22, Oak Ridge National Laboratory, Oak Ridge Tennessee, for the U. S. Atomic Energy Commission, September 1968.

3.6-18 Not Used

3.6-19 Harris and Crede, Shock and Vibration Handbook, McGraw Hill Book Company, Inc., 1961.

3.6-20 Kennedy, R. P., A Review of Procedures for the Analysis and Design of Concrete Structures to Resist Missile Impact Effects, Nuclear System Sciences Group, Holmes & Narver Inc., Anaheim, California, September 1975.

3.6-21 Idaho National Engineering Laboratory, RELAP4/MOD5, A Computer Program For Transient Thermal-Hydraulic Analysis of Nuclear Reactors and Related Systems, Volume I: RELAP4/MOD5 Description, Volume II: Program Implementation, Volume III: Checkout Application, National Technical Information Service, U.S. Department of Commerce, Springfield, Virginia.

3.6-22 ANSI/ANS 58.2, "Design Basis for Protection of Light Water Nuclear Power Plants From the Effects of Postulated Pipe Rupture," 1980.

3.6-23 G. E. Proprietary Report NEDE-24834, General Electric Company, "Hanford 2 Crimped CRD Line," June 1980.

3.6-24 NEDE-33507-P, Revision 1, "Columbia Generating Station APRM/RBM/Technical Specifications/Maximum Extended Load Line Limit Analysis (ARTS/MELLLA)," January 2012.

3.6-25 Zachry Nuclear Engineering, Inc. (formerly Numerical Applications, Inc.), GOTHIC Thermal Hydraulic Analysis Package, Version 7.0 (QA), June 2001.

3.6-26 Zachry Nuclear Engineering, Inc. (formerly Numerical Applications, Inc.), GOTHIC Thermal Hydraulic Analysis Package, Version 8.1 (QA), September 2014.

3.6-27 River Bend Safety Evaluation - Amendment No. 139 to Facility Operating License No. NPF-47 for the River Bend Station, Unit 1 approved May 20, 2014 via ML041410566.

Table 3.6-1

High Energy Fluid Systems Outside
Primary Containment

System	Portion
Reactor core isolation cooling	Turbine supply and condensate removal lines
Auxiliary steam	Entire system
Heating steam	Entire system
Auxiliary condensate	Entire system
Heating steam condensate	Entire system
Control rod drive	Exhaust water header
Reactor water cleanup	Supply and return piping between RPV and Demineralizers
Main steam	Portion inside reactor building
Reactor feedwater	Portion inside reactor building

Table 3.6-2

Moderate Energy Fluid Systems Outside
Primary Containment

System	Portion
Residual heat removal	Entire system
Condensate	Entire system
Control rod drive	Portion which is not high energy
Demineralized water	Entire system
Reactor closed cooling water	Entire system
Fuel pool cooling	Entire system
Service water	Entire system
Plant service water	Entire system
Low pressure core spray	Entire system
High pressure core spray	Entire system
Reactor core isolation cooling	Portion which is not high energy
Fire protection	Entire system
Standby liquid control	Entire system

Table 3.6-3

Design Basis Break Locations Outside
Primary Containment

System	Node	M-200 Isometric	Diameter (in.)	Maximum Force (kips) or Thrust vs. Time Figure	Plan Location Figure
RCIC	15	120	4	3.6-96	3.5-11
RCIC	38	120	4	3.6-97	3.5-10
RCIC	40	120	4	3.6-97	3.5-10
RCIC	8	120	4	14.59	3.5-11
RCIC	54	120	4	10.6	3.6-5
RWCU	75	126	4	17.64	3.6-8
RWCU	45	126	4	17.64	3.6-8
RWCU	23	126	6	3.6-100	3.6-9
RWCU	2	126	6	3.6-101	3.6-9
RWCU	94	128	6	3.6-102	3.6-9
RWCU	133	128	6	3.6-99	3.6-8
RWCU	38	129	4	3.6-98	3.6-8
RWCU	17	129	4	3.6-98	3.6-8
RWCU	1056	129	5	23.79	3.6-8
RWCU	1034	129	5	23.79	3.6-8
MS	195	134	2	2.85	3.6-2
MS	207	134	2	2.85	3.6-2
MS	219	134	2	2.85	3.6-2
MS	228	134	2	2.85	3.6-2
MS	171	134	3	6.88	3.6-2
AS	87/387	139	4	3.6-105	3.6-1
AS	42, 73, 44	139	4	3.6-104	3.6-1
AS	168	139	4	3.6-104	3.6-1
AS	12	141	6	7.28	3.6-1

Table 3.6-3

Design Basis Break Locations Outside
Primary Containment (Continued)

System	Node	M-200 Isometric	Diameter (in.)	Maximum Force (kips) or Thrust vs. Time Figure	Plan Location Figure
AS	87	141	8	12.61	3.6-1
AS	153	141	8	12.61	3.6-1
AS	42	141	8	12.61	3.6-1
RWCU	1	142	6	30.25	3.6-9
RWCU	13	142	6	30.25	3.6-9
RWCU	1	144	4	13.34	3.6-11
RWCU	31	144	4	13.34	3.6-9
RWCU	48	144	6	30.25	3.6-9
RWCU	105	144	6	13.25	3.6-9
RWCU	767-771	144	6	30.25	3.6-9
RWCU	1140	144	4	13.29	3.5-11
HS	1	148	3	1.02	3.6-18
HS	387/987	148	4	3.6-105	3.6-18
HS	143	148	2	1.02	3.6-18
HS	151	148	2	1.02	3.6-18
HS	161	148	2	1.02	3.6-18
HS	443	148	2	1.02	3.6-18
HS	424	148	2	1.02	3.6-18
HS	17	148	2	1.02	3.6-18
HS	192	148	2	1.02	3.6-18
HS	203	148	2	1.02	3.6-18
HS	1101	148	3	1.02	3.6-18
HCO	211	149	2.5	0.182	--
HCO	269	149	4	0.182	--

Table 3.6-3

Design Basis Break Locations Outside
Primary Containment (Continued)

System	Node	M-200 Isometric	Diameter (in.)	Maximum Force (kips) or Thrust vs. Time Figure	Plan Location Figure
HCO	59	149	3	0.182	3.6-16
HCO	923	149	3	0.182	3.6-20
RFW	159	128	4	18.33	3.5-11
RFW	160	128	4	18.33	3.5-11
RFW	161	128	4	18.33	3.5-11
RFW	166	128	4	18.33	3.5-11
RFW	876	335B	24	433.12	3.5-11
RFW	874	335B	24	433.12	3.5-11
RFW	839	335B	24	433.12	3.5-11
RFW	837	335B	24	433.12	3.5-11
RFW	875 (36)	335B (128)	4	18.33	3.5-11
RFW	838 (6)	335B (128)	4	18.33	3.5-11
HS	313	342	6	7.28	3.6-1
AS	34	342	8	12.6	3.6-1
SS	1000	342	8	12.6	--
MS	1190	315	26	432.2	3.6-2
MS	171	400	26	432.2	3.6-2
MS	4	401	26	432.2	3.6-2
MS	67	402	26	432.2	3.6-2
CO	--	440	2.5	1.63	--
CO	--	440	2.5	1.63	--
CO	--	440	2.5	1.63	--
HS	43	447	6	1.82	--
HS	--	447	6	1.82	--

Table 3.6-3

Design Basis Break Locations Outside
Primary Containment (Continued)

System	Node	M-200 Isometric	Diameter (in.)	Maximum Force (kips) or Thrust vs. Time Figure	Plan Location Figure
HS	1000	447	6	1.82	--
HS	193-194	447	6	1.82	--
HS	313	448	6	1.82	--
HS	47 (203-205)	448	6	1.82	--
HS	201-202	448	6	1.82	--
HS	199-200	448	6	1.82	--
HS	43 (198-984)	448	6	1.82	--
HS	206-207	448	6	1.82	--
HS	44 (208-209)	448	6	1.82	--
HS	209-210	448	6	1.82	--
HS	45 (211-213)	448	4	0.802	--
HS	18	448	4	0.802	--
HCO	0	449	3	0.093	--
HCO	1-2	449	3	0.093	--
HCO	3-4	449	3	0.093	--
HCO	5-6	449	3	0.093	--
HCO	170 (7-8)	449	3	0.093	--
HCO	9-10	449	3	0.093	--
HCO	11-12	449	3	0.093	--
HCO	145	449	3	0.093	--
HCO	160 (15-17)	449	3	0.093	--
HCO	18-19	449	3	0.093	--
HCO	21-22	450	3	0.093	--
HCO	26 (25-27)	450	3	0.093	--

Table 3.6-3

Design Basis Break Locations Outside
Primary Containment (Continued)

System	Node	M-200 Isometric	Diameter (in.)	Maximum Force (kips) or Thrust vs. Time Figure	Plan Location Figure
HCO	27-28	450	3	0.093	--
HCO	29-131	450	2.5	0.060	--
HCO	227-1227	450	2.5	0.060	--
HCO	1228-228	450	2.5	0.060	--
RWCU	600	500[a]	4	13.38	3.6-20a
RWCU	100a	500[a]	4	13.39	3.6-20b
RWCU	1670	500[a]	1.5	1.64	3.6-20a
RWCU	720	500[a]	4	13.39	3.6-20b
RWCU	6913	500[a]	2	2.61	3.6-20a
RWCU	680	500[a]	4	13.39	3.6-20a
RWCU	501	500[a]	4	13.39	3.6-20b
RWCU	4770	500[a]	1.5	1.64	3.6-20a
RWCU	310	500[a]	4	13.39	3.6-20b
RWCU	2898	500[a]	2	2.61	3.6-20a
RWCU	270	500[a]	4	13.39	3.6-20a
RWCU	100	500[a]	4	13.39	3.6-20a

[a] For Nodal Locations, Refer to FSAR Figures 3.6-38.4 and 3.6-38.5

Table 3.6-4

Resistance-Yield Displacement
Values for Beams

Description	Resistance	Yield Displacement
1. Cantilever 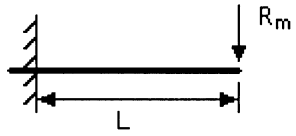	$R_m = \frac{M_u}{L}$	$X_e = \frac{R_m L^3}{3EI}$
2. Simply supported 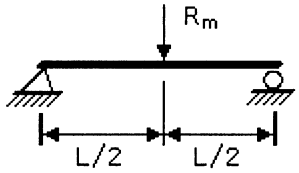	$R_m = \frac{4M_u}{L}$	$X_e = \frac{R_m L^3}{48EI}$
3. Fixed supports 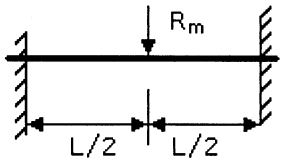	$R_m = \frac{4\left(M_u^+ + M_u^-\right)}{L}$	$X_e = \frac{R_m L^3}{192EI}$

where:

M_u^+ = ultimate positive moment capacity (ft-lb)
M_u^- = ultimate negative moment capacity (ft-lb)
I = moment of inertia ($in.^4$)
for reinforced-concrete I = I_a see notes accompanying table

NOTES

The resistance of typical structural elements, whose flexural strength defines the minimum capacity, and their yield displacement approximations are presented in Tables 3.6-4 and 3.6-5. It is preferable that the limiting capacity of an element be in the flexural mode, not in shear. In evaluating the yield displacement with the usual elastic analysis, the moment of inertia must account for cracking of concrete sections. The empirical relation for this type of loading is an average moment of inertia, I_a, calculated as follows.

Table 3.6-4

Resistance-Yield Displacement
Values for Beams (Continued)

NOTES (Continued)

$$I_a = \tfrac{1}{2}\left(I_g + I_c\right) = \tfrac{1}{2}\left(\frac{bt^3}{12} + Fbd^3\right)$$

where

I_g = moment of inertia of gross concrete cross section of thickness t about its centroid (neglecting steel areas) ($in.^4$)

I_c = moment of inertia of the cracked concrete section ($in.^4$)

b = width of concrete sections (in.)

F = coefficient for moment of inertia of cracked section with tension reinforcing only (see Figure 3.6-106)

t = concrete thickness (in.)

d = distance from extreme compression fiber to centroid of tension reinforcing (in.)

The moment of inertia, I_a, as calculated by the above equation must be used in the displacement equation in Tables 3.6-4 and 3.6-5 for all reinforced-concrete members. The ultimate moment capacity of a concrete section is considered as the moment strength:

$$M_u = 0.9A_s f_{dy}\left(d - a/2\right) \quad \text{(in.-lb)}$$

where

A_s = area of tensile reinforcing steel ($in.^2$)

f_{dy} = allowable dynamic yield stress for reinforcing steel ($lb/in.^2$)

d = distance from extreme compression fiber to centroid of tension reinforcing (in.)

a = depth of equivalent rectangular stress block (in.)

Table 3.6-4

Resistance-Yield Displacement
Values for Beams (Continued)

NOTES: (Continued)

If the element has compression steel, the appropriate equation for compression steel applies.

The amount of reinforcing steel in concrete members satisfied the following criteria:

For members with tension steel only:

$$\frac{1.4\sqrt{f'_c}}{f_y}\left(\frac{t}{d}\right)^2 \leq \frac{A_s}{bd} \leq \frac{0.25\ f'_c}{f_y}$$

For members with tension and compression steel:

$$\frac{1.4\sqrt{f'_c}}{f_y}\left(\frac{t}{d}\right)^2 \leq \frac{A_s}{bd}$$

$$\frac{A_s - A'_s}{bd}\left(\frac{t}{d}\right)^2 \leq \frac{0.25\ f'_c}{f_y}$$

where

f'_c = compression strength of concrete (lb/in.^{2})
A'_s = area of compressive reinforcement of concrete (in.^{2})

Table 3.6-5

Resistance-Yield Displacement
Values for Slabs and Plates

Description	Resistance	Yield Displacement

1. Simply supported on all four sides with load at center

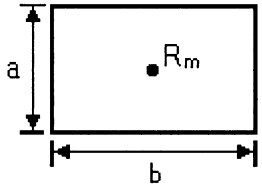

$$R_m = 2\pi M_u$$

$$X_e = \frac{\alpha R_m a^2}{12EI}\left(1 - \nu^2\right)$$

b/a	1.0	1.1	1.2	1.4	1.6	1.8	2.0	3.0	∞
α	0.1390	0.1518	0.1624	0.1781	0.1884	0.1944	0.1981	0.2029	0.2031

2. Fixed supports on all 4 sides with load at center

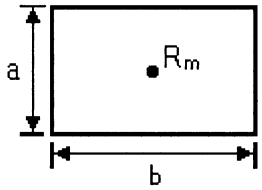

$$R_m = 2\pi\left(M_u^+ + M_u^-\right)$$

$$X_e = \frac{\alpha R_m a^2}{12EI}\left(1 - \nu^2\right)$$

b/a	1.0	1.2	1.4	1.6	1.8	2.0	∞
α	0.0671	0.0776	0.0830	0.0854	0.0864	0.0866	0.0871

where

ν = Poisson's ratio
t = thickness (in.)
E = modulus of elasticity (lb/in.^{2})
I = moment of inertia per unit width (in.^{4}/in.)
for reinforced-concrete section I = I_a see notes accompanying Table 3.6-4
M_u^+ = ultimate positive moment capacity (in.-lb/in.)
M_u^- = ultimate negative moment capacity (in.-lb/in.)

Table 3.6-6

Design Load in Areas Where Piping Failures Occur

Pipe Break	Room	El. (ft)	Differential Pressure (psid)	Differential Temperature (°F)		Live Load (psf)	Hung Loads (psf)		Equipment Loads (Kips)
				Int. to Int.	Int. to Ext.		From Floor	From Ceiling	
120-8	R15	422	3.9	0	40	--	--	59	1.4[k] pump
120-4	R113	441	4.1	0	40	250	59	68	None
120-5, 6, 7	R112	441	3.9	0	40	250	59	68	None
139-3, 4, 19, 20, 21	R206	471	1.2	0	40	250	32	34	None
120-1, 2	R313	510 ft 6 in.	2.9	0	40	250	40	30	None
128-11									
128-10	R408	522	2.3	0	--	250	41	88	None
126-3, 5	R406	522	15.0	0	--	250	126	0	1.5[k] pump
129-47, 48	R407								
126-1, 2	R409	535	14.6	0	--	250	40	80	None
129-39, 41, 42, 43, 44, 45									
128-48									
144-27, 28	R511	548	6.6	20	--	400	80	55	None
144-32									
126-6, 128-7, 8	R510	548	2.9	20	--	400	65	51	Heat exchangers 16.2 and 29.5
142-20, 21, 22, 23									
144-29, 31									

Table 3.6-6

Design Load in Areas Where Piping Failures Occur (Continued)

Pipe Break	Room	El. (ft)	Differential Pressure (psid)	Differential Temperature (°F)		Live Load (psf)	Hung Loads (psf)		Equipment Loads (Kips)
				Int. to Int.	Int. to Ext.		From Floor	From Ceiling	
128-9	R509	548	1.00	20	--	400	88	50	None
139-1	R604	572	0.07	0	40	250	15	36	Heat and vent unit 51K
148-1, 2, 3, 5, 6, 7, 8, 9, 10, 11, 12									
120-6	R308	501	1.6	0	40	1000	63	55	None
Steam tunnel	R310	501	20.0	20	--	1000	277	41	None
(RWCU-100, 600)[a]	C230	467	0.58	0	--	150	(P)[b]	40	None
(RWCU-100a, 720)[a]	C333	487	1.00	0	--	150	120	40	37[k] Demin
(RWCU-1670, 6913, 680)[a]	C217	467	0.95	0	--	150	170	120	None
(RWCU-310, 501)[a]	C336	487	1.00	0	--	150	120	40	37[k] Demin
(RWCU-270, 2898, 4770)[a]	C219	467	0.95	0	--	150	170	120	None

Notes: For location of pipe break numbers, see Table 3.6-3.
For vertical and horizontal seismic factors, see Section 3.7.
[a] For Node Locations, Refer to FSAR Figures 3.6-38.4 and 3.6-38.5.
[b] Force given as multiple point loads.

Table 3.6-7

Maximum Ductility Ratios Steel
Structural Components

Steel beams (lateral load)	
(Note: To develop this ductility, the flanges must be thick enough to prevent local plastic buckling)	26
Steel beams (lateral and axial load)	8
Welded portal frams (vertical load)	6-16

REINFORCED-CONCRETE STRUCTURAL COMPONENTS

Tension reinforced-concrete beams and slabs, (flexure controls design)	$\frac{0.10}{p^a}$ _ 10
Doubly reinforced-concrete beams and slabs, (flexure controls design)	$\frac{0.10}{p\text{-}p'^b}$ _ 10
Reinforced-concrete columns, walls, and other elements exhibiting brittle fracture (compression controls design)	1.3

[a] p is the ratio of tensile reinforcement.

[b] p' is the ratio of compression reinforcement.

Table 3.6-8

Dynamic Strength of Materials

	Dynamic Increase Factor
Reinforced concrete	
Concrete	
Compression, axial or flexural	1.25
Shear as a measure of diagonal tension and punching shear	1.00
Bond	1.00
Reinforcing steel	
Tension	1.10
Compression	1.10
Shear reinforcement to resist shear as a measure of diagonal tension and punching shear	1.00
Structural Steel	
Flexure and tension	1.10
Compression	1.10
Shear	1.00

Table 3.6-9

Summary of Subcompartment Pressure Analysis[a]

Compartment Where Break Occurs			Piping System	Differential Pressure	
Elevation (ft)	Room	Description	Line Designation	Maximum Differential (psi)	Differential Between the Rooms
422	R15/R112	RCIC pump room	4"RCIC (13)-4	2.8	R15, R112/R206
				2.8	R15, R112/R14, R113
				2.8	R15, R112/R6, R116
471	R206	El. 471 ft, SE corner	4"AS (11)-2	0.25	Reactor building and
		Open floor area	3"AS (11)-2	0.25	ambient
471	R206C	Pipe chase el. 471 ft	4"RCIC (13)-4	1.2	R308/R206
501	R308	TIP room	4"RCIC (13)-4	0.2	R308/R305, R206, R313
501	R308	TIP room	6"RWCU (2)-4	0.24	R308/R305, R206, R313
501	R313	El. 510 ft valve room	6"RWCU (2)-4	0.24	R313/R308, R408
441	R105	Railway Bay	4"RWCU (5)-3	0.27	R105, Reactor Bldg
441	R102/R107/ R111	El. 441 Reactor Building Stairwell	4"RWCU (5)-3	0.25	R102/R107/R111, Reactor Bldg
471	R206	El. 471 Open Floor Area	4"RWCU (5)-3	0.25	R206, Reactor Bldg
501	R305	El. 501 Open Floor Area	4"RWCU (5)-3	0.24	R305, Reactor Bldg
522	R404	El. 522 Open Floor Area	4"RWCU (5)-3	0.24	R404, Reactor Bldg
548	R510	El. 548 Open Floor Area	4"RWCU (5)-3	0.22	R510, Reactor Bldg

Table 3.6-9

Summary of Subcompartment Pressure Analysis[a]

Compartment Where Break Occurs			Piping System	Differential Pressure	
Elevation (ft)	Room	Description	Line Designation	Maximum Differential (psi)	Differential Between the Rooms
572	R604/R607/ R608	El. 572 Open Floor Area	4"RWCU (5)-3	0.2	R604/R607/R608, Reactor Bldg
606	R704	El. 606 Fuel Handling Area	4"RWCU (5)-3	0.17	R704, Reactor Bldg
522	R406/R407[b]	RWCU pump room	4"RWCU (1)-4	6.9	R406/R404, R305
			6"RWCU (1)-4	5.6	R406/R407, R409
				3.9	R409/R504, R404
				1.7	R405/R305, R404, R504
				2.2	R409/R405
467	C230	Cable Chase Room	4"RWCU (2)-3	0.58[c]	C230/C217, C212, Reactor building
				0.33	
487	C344	Cable Chase Room	4"RWCU (1)-3	0.59	C344/C325, C326
				0.34	Reactor building

Table 3.6-9

Summary of Subcompartment Pressure Analysis[a] (Continued)

Compartment Where Break Occurs			Piping System	Differential Pressure	
Elevation (ft)	Room	Description	Line Designation	Maximum Differential (psi)	Differential Between the Rooms
522	R408	Valve room	6"RWCU (2)-4	1.1	R408/R404
				1.1	R408/R305
				1.1	R408/R509
548	R509	Valve room	6"RWCU (2)-4	0.9	R509/R508, R408
				0.9	R509/R607
548	R510	RWCU HX room	6"RWCU (1)-5SX/SXL	2.7	R510/R504, R508
				2.7	R510/R404, R604
548	R511/ R511A	Valve room	6"RWCU (1)-4	6.3	R511/R404, R504
				2.4	R511/R604
572	R604	El. 572 ft open floor area	4"HS (1)-2	0.07	Reactor building and
			4"AS (11)-2	0.07	Ambient

[a] Table applies to reactor building secondary containment and portions of the radwaste building, exclusive of the main steam tunnel, tunnel ventway, and tunnel extension.

[b] Break could occur in either room; break assumed in R406.N

[c] This differential pressure does not account for hydrostatic pressure due to flooding. With the approximate 9.6 inches of flooding in room C230, the differential pressure across the floor/door C228 is approximately 0.93 psi.

Table 3.6-10

Subcompartment Analysis

Nodal Volume Data for a Postulated Pipe Break in the Main Steam Tunnel[a]

Node	Description	Volume (ft^3)	Elevation (ft)
1	Main steam tunnel, south	7427	501
2	Main steam tunnel, north	4345	501
3	Ventway, el. 501 ft 0 in. to el. 519 ft 0 in.	3629	501
4	Ventway, el. 519 ft 0 in. to el. 532 ft 0 in., west	3672	519
5	Ventway, el. 519 ft 0 in. to el. 532 ft 0 in., east	2340	519
6	Ventway, el. 532 ft 0 in. to el. 548 ft 0 in.	7855	532

[a] For nodalization scheme, see Figure 3.6-67.

Table 3.6-11

Subcompartment Analysis

Flow Junction Data for a Postulated Pipe Break in the Main Steam Tunnel[a]

From Node	To Node	Junction Flow Area (ft^2)	Junction Elevation (ft)	Junction Inertia (ft^{-1})	Form Loss Coefficient[b]		Frictional Loss Coefficient[b]
					Forward Flow	Reverse Flow	
1	2	438.7	509	0.02656	1.06	1.14	0.1
2	3	c					
2	4	218.4	519	0.06044	2.66	2.69	0.1
3	5	170.0	519	0.08014	0.163	0.116	0.1
4	5	84.6	525	0.378	0.6	0.6	0.1
4	6	310.4	532	0.368	0.6	0.6	0.1
5	6	170.0	532	0.0486	0.145	0.206	0.1

[a] For nodalization scheme, see Figure 3.6-67.

[b] These data are dimensionless.

[c] No data furnished since panel B between nodes 2 and 3 is assumed closed during postulated pipe break.

Table 3.6-12

Main Steam Tunnel Subcompartment Analysis
Information for Blowout Panels C and D

Panel C (horizontal, hinged, nonbolted, sheet steel blowout panel)

Total weight:	2060 lb
Area:	230.6 ft^2
Moment arm:	3.375 ft
Moment of inertia:	31,286 lb_{mass}-ft^2
Damping constant:	Neglected

Panel D (vertical, bolted, insulated metal blowout panel)

Total weight:	16,000 lb
Area:	1060.8 ft^2

Reference: Figures 3.6-65 and 3.6-66.

Table 3.6-13

Subcompartment Analysis

Nodal Volume Data for a Postulated Pipe Break in
the Main Steam Tunnel Extension[a]

Node	Description	Volume (ft^3)	Elevation (ft)
1	Main steam tunnel extension, south	2320	501
2	Main steam tunnel extension, north	2799	501
3	Turbine generator building, el. 471 ft 0 in. floor	728610	471
4	Turbine generator building, el. 441 ft 0 in. floor	658938	441
5	Turbine generator building, el. 501 ft 0 in. floor	1270590	501

[a] For nodalization scheme, see Figure 3.6-76.

Table 3.6-14

Subcompartment Analysis

Flow Junction Data for a Postulated Pipe Break in the Main Steam Tunnel Extension[a]

From Node	To Node	Junction Flow Area (ft^2)	Junction Elevation (ft)	Junction Inertia (ft^{-1})	Form Loss Coefficient[b]		Frictional Loss Coefficient[b]
					Forward Flow	Reverse Flow	
1	2	379.0	509	0.01395	0.6	0.56	0.1
1	3	73.6	501	0.1722	1.29	1.07	0.1
2	3	114.6	501	0.1434	1.16	0.99	0.1
3	4	230.0	471	0.1091	1.28	1.49	0.1
3	5	507.0	501	0.01176	1.54	1.55	0.1

[a] For nodalization scheme, see Figure 3.6-67.

[b] These data are dimensionless.

Table 3.6-15

Piping Systems Inside Containment for Which Design Basis Pipe Breaks are Postulated

System	Portion
Low pressure core spray (LPCS)	RPV to first check valve.
High pressure core spray (HPCS)	RPV to first check valve.
RHR/LPCI mode (loop A)	RPV to first check valve.
RHR/LPCI mode (loop B)	RPV to first check valve.
RHR/LPCI mode (loop C)	RPV to first check valve.
RHR shutdown cooling return (loop A)	Recirculation pump discharge to first check valve.
RHR shutdown cooling return (loop B)	Recirculation pump discharge to first check valve.
RHR shutdown cooling supply	Recirculation pump suction to closed valve RHR-V-9 (MOF009).
Reactor feedwater (RFW) line A	Entire run within primary containment.
Reactor feedwater (RFW) line B	Entire run within primary containment.
RHR condensing mode/RCIC turbine steam	Entire run within primary containment.
Main steam (MS) loop A	Entire run within primary containment.
Main steam (MS) loop B	Entire run within primary containment.
Main steam (MS) loop C	Entire run within primary containment.
Main steam (MS) loop D	Entire run within primary containment.
Standby liquid control (SLC)	RPV to closed valve SLC-V-8, HPCS line to first check valve.
Reactor water cleanup (RWCU)	Entire run within primary containment.
RRC Recirculation pump A discharge	Entire run within primary containment.

Table 3.6-15

Piping Systems Inside Containment for Which Design Basis
Pipe Breaks are Postulated (Continued)

System	Portion
RRC recirculation pump B discharge	Entire run within primary containment.
RRC recirculation pump A suction	Entire run within primary containment.
RRC recirculation pump B suction	Entire run within primary containment.
RRC reactor pressure vessel drain	RPV to three (3) closed valves.
Main steam (MS) valves drainage piping	Entire run within primary containment.
Main steam (MS) RPV head vent	Entire run within primary containment.
RCIC/RPV head spray	RPV to first check valve.

Table 3.6-16

Piping Systems Containing Break Exclusion
Areas Between Primary Containment Isolation Valves

Piping System	Pipe Size (in.)
Main steam loop A	26
Main steam loop B	26
Main steam loop C	26
Main steam loop D	26
Reactor feedwater line A	24
Reactor feedwater line B	24
RHR condensing mode/RCIC turbine steam	10/4
Reactor water cleanup	6

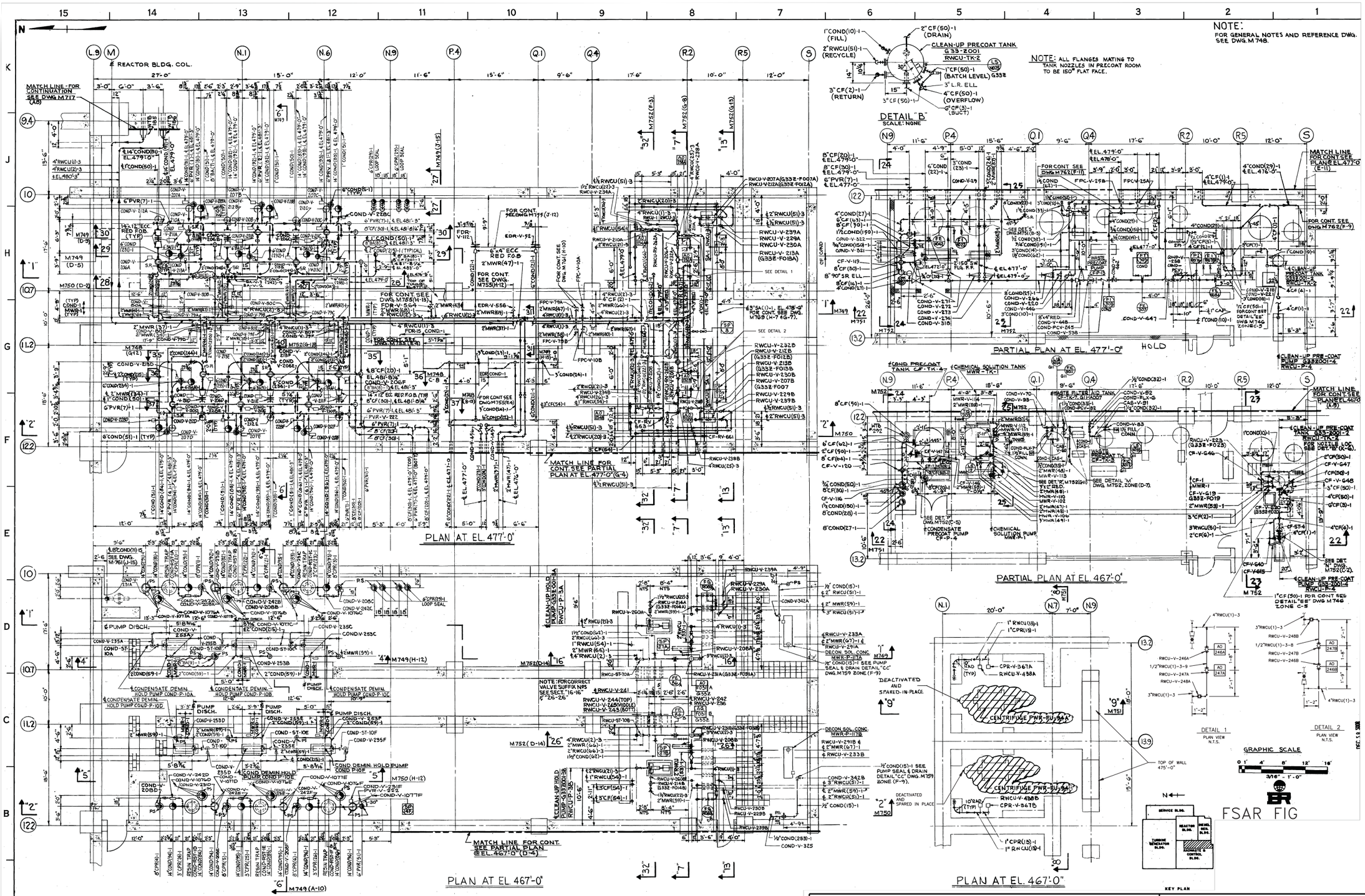

Columbia Generating Station
Final Safety Analysis Report

COND POLISHING AND RWCU PIPING PLAN EL 467FT AND EL 477FT W

Draw. No. M747	Rev. 47	Figure 3.6-20A

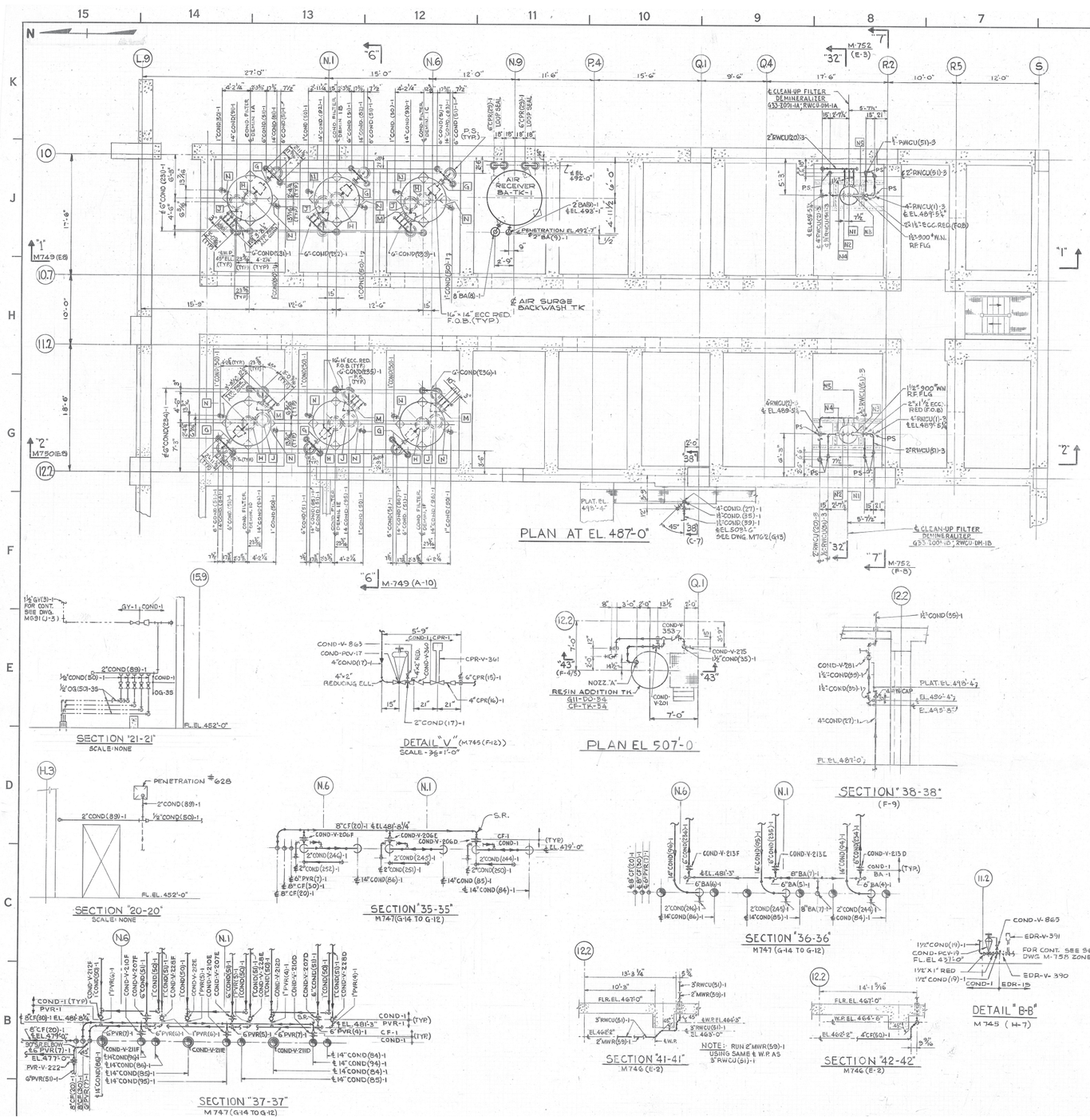

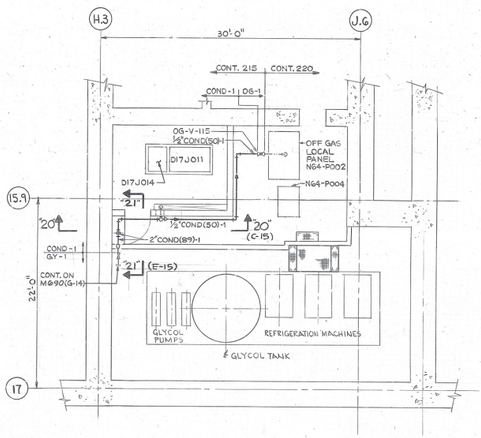

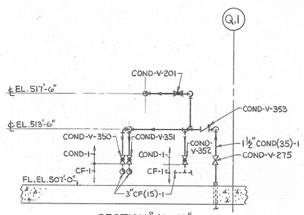

GENERAL NOTES:

1. ALL DRAINS TO EQUIPMENT DRAINS TO TERMINATE 1' ABOVE FINISHED FLOOR UNLESS OTHERWISE NOTED.
2. W. T. B. - WATER TIGHT BOOT; FOR DETAIL SEE DWG. M858, SHT. 1&2.
3. P.S. - PIPE SLEEVE.
4. ALL PIPING & ASSOCIATED COMPONENTS SHOWN ON THESE DWGS SHALL BE CLASSIFIED AS INDICATED ON THEIR RESPECTIVE SYSTEM FLOW DIAGRAMS
5. WORK THIS DWG. WITH DWGS. M745 THRU M747 AND M749 THRU M752
6. FOR INSTALLATION OF THERMOWELLS AND TEMPERATURE TEST CONNECTIONS SEE DWG. M610.
7. ALL VALVE STEMS FOR VALVES 2½" AND LARGER NOT LOCATED SHALL BE IN A VERTICAL POSITION.

REFERENCE DRAWINGS:

FLOW DIAGRAM - REACTOR WATER CLEAN-UP SYSTEM, DWG. M-523

FLOW DIAGRAM- FUEL POOL COOLING AND CLEAN-UP SYSTEM, DWG. M-524

FLOW DIAGRAM- CONDENSATE SUPPLY SYSTEM ALL BUILDINGS, DWG. M-527

FLOW DIAGRAM- RADIOACTIVE WASTE SYSTEM FLOOR DRAIN PROCESSING, DWG. M-531

FLOW DIAGRAM- RADIOACTIVE WASTE SYSTEM EQUIPMENT DRAIN PROCESSING, DWG. M-532

FLOW DIAGRAM- CHEMICAL WASTE PROCESSING, DWG. M-533

FLOW DIAGRAM - RADIOACTIVE WASTE SYSTEM CONDENSATE DEMINERALIZATION, DWG. M534.

FLOW DIAGRAM- RADIOACTIVE WASTE DISPOSAL SOLIDS HANDLING SYSTEM DWG. M-536

INSTALLATION OF THERMOWELLS AND SAMPLE PROBES DWG. M 610

GENERAL NOTES: (CONT'D)

8. TANK FLUSHING CONTROL AIR CHECK VALVES AND FLEXIBLE HOSES ARE TO BE INSTALLED AS CLOSE AS POSSIBLE TO INSTRUMENT AIR BUBBLER.

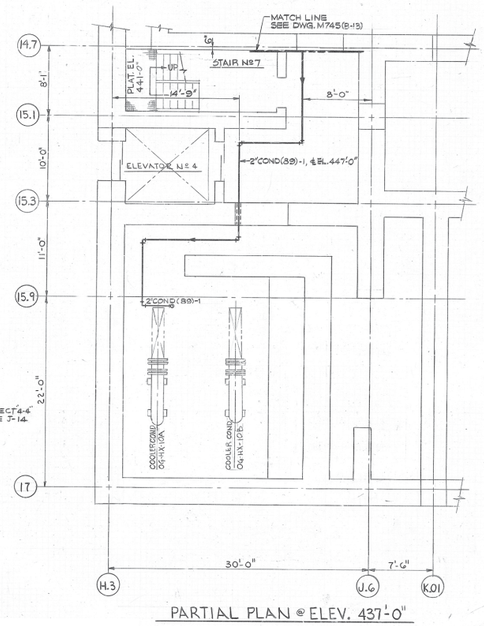

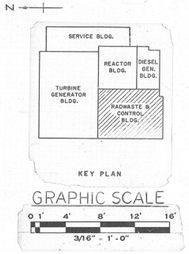

Columbia Generating Station
Final Safety Analysis Report

CONDENSATE POLISHING AND RWCU PIPING PLAN 487FT AND MISCELLANEOUS PARTIAL PLANS AND SECTIONS

Draw. No. M748	Rev. 15	Figure 3.6-20B

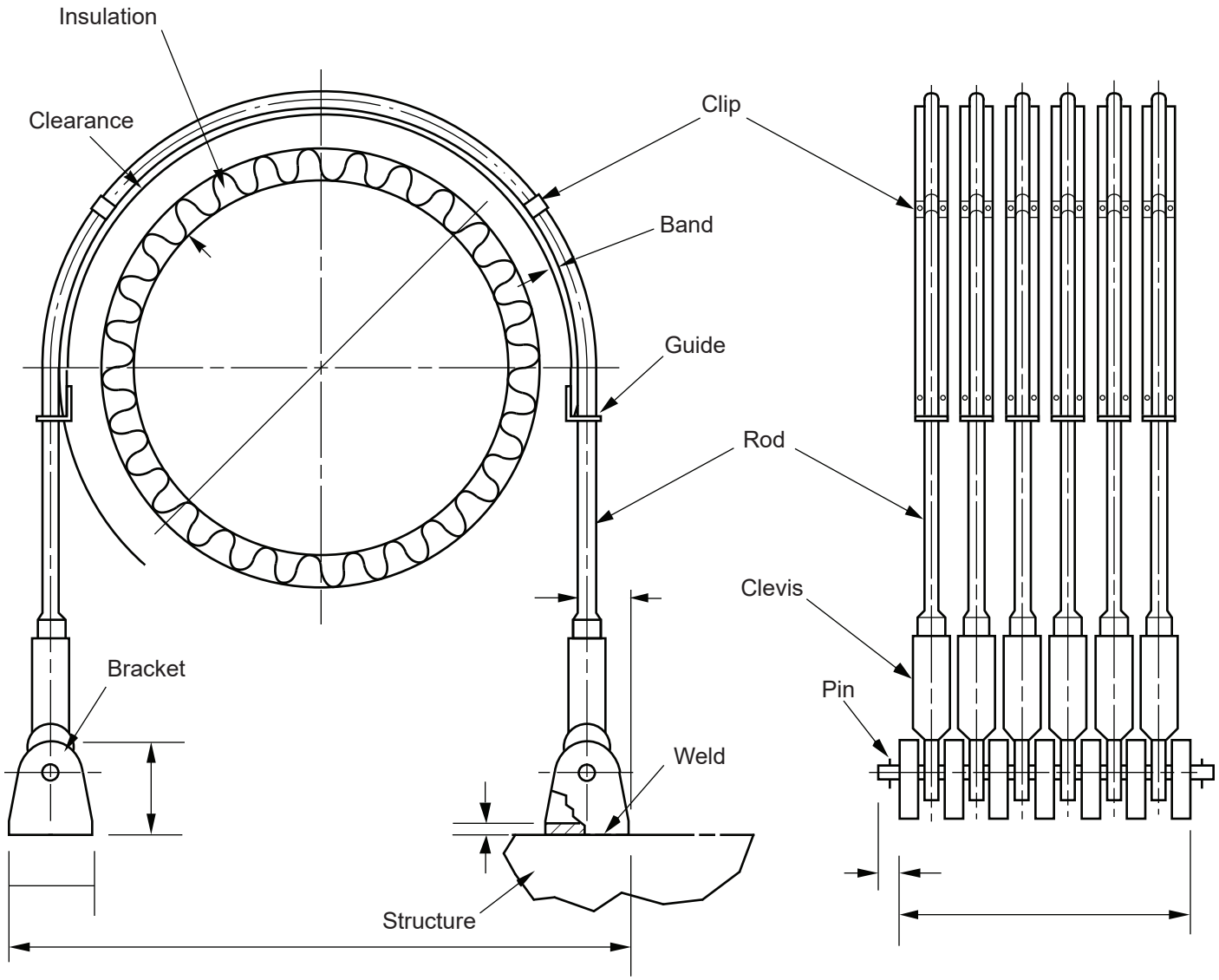

Columbia Generating Station
Final Safety Analysis Report

U-Bar Type Pipe Whip Restraint Configuration

Draw. No. 970187.78	Rev.	Figure 3.6-21

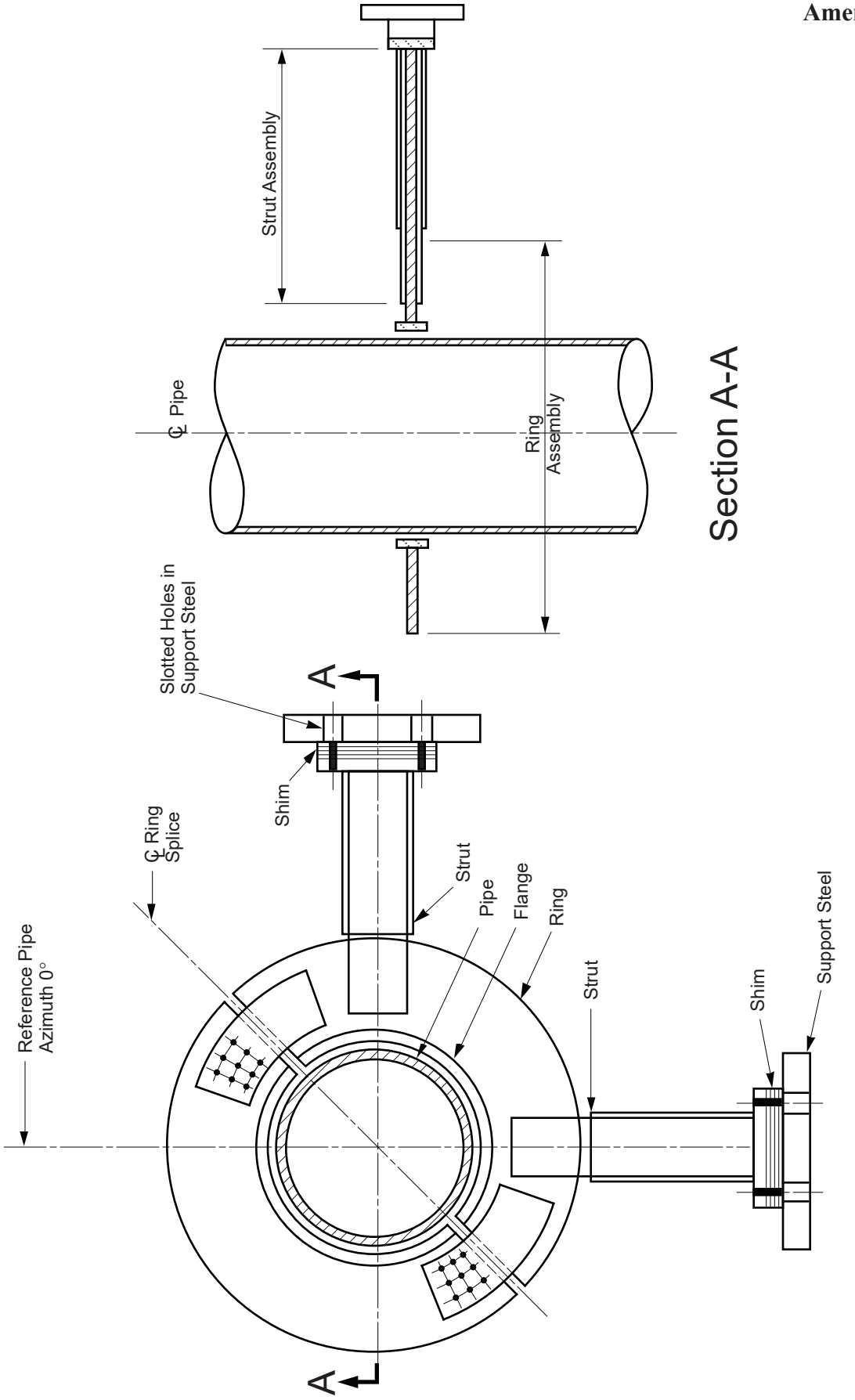

Columbia Generating Station
Final Safety Analysis Report

Rigid Type Pipe Whip Restraint Configuration

Draw. No. 990578.57	Rev.	Figure 3.6-22.1

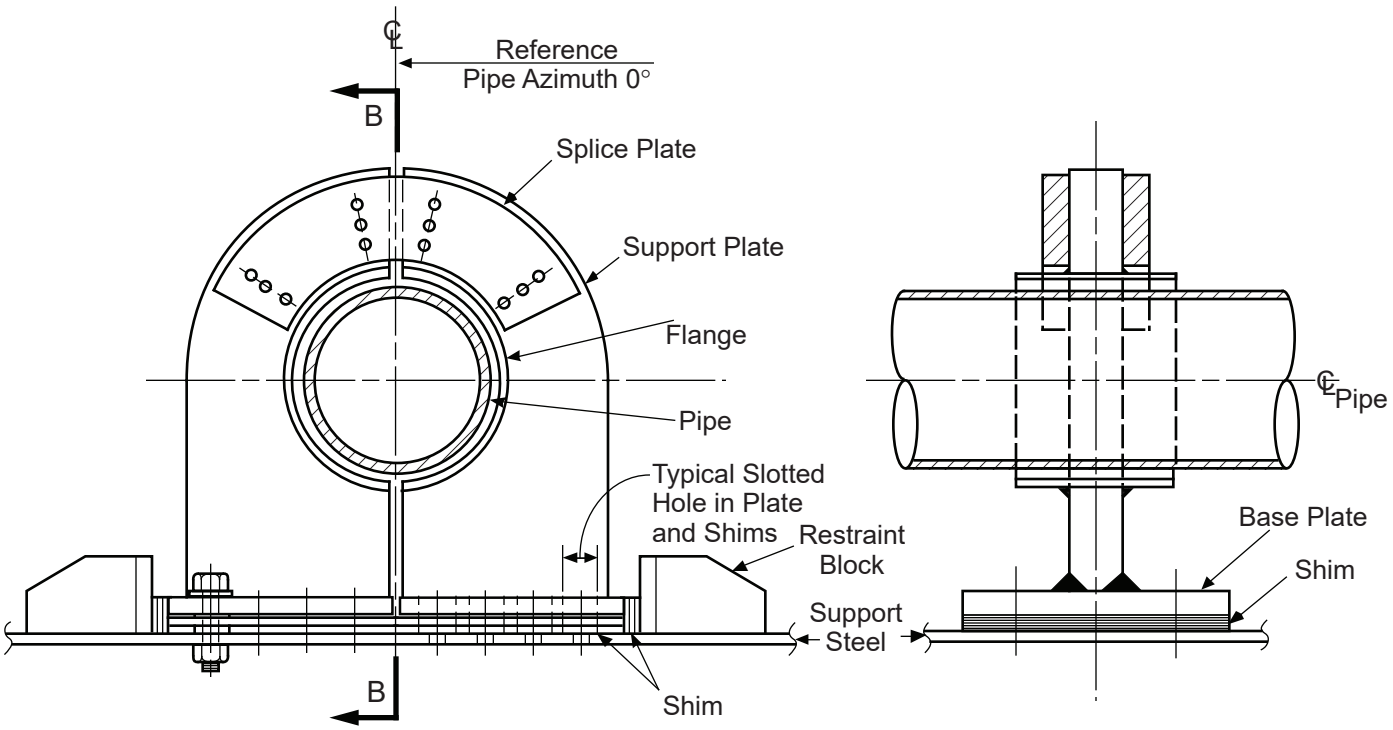

Type 2 Pipe Whip Support

Section B-B

Columbia Generating Station **Final Safety Analysis Report**	**Rigid Type Pipe Whip Restraint Configuration**		
	Draw. No. **970187.79**	Rev.	Figure **3.6-22.2**

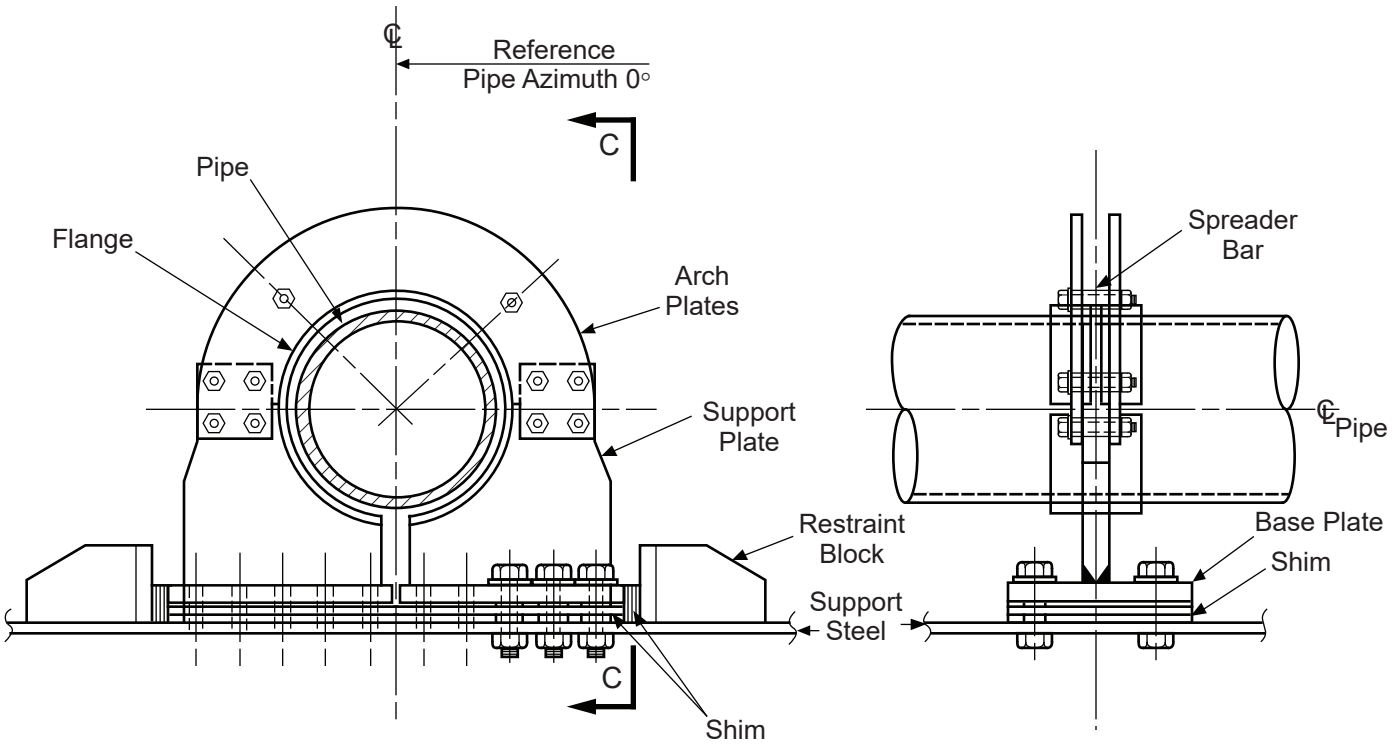

Type 3 Pipe Whip Support

Section C-C

Columbia Generating Station Final Safety Analysis Report	Rigid Type Pipe Whip Restraint Configuration		
	Draw. No. 970187.80	Rev.	Figure 3.6-22.3

Form No. 960690

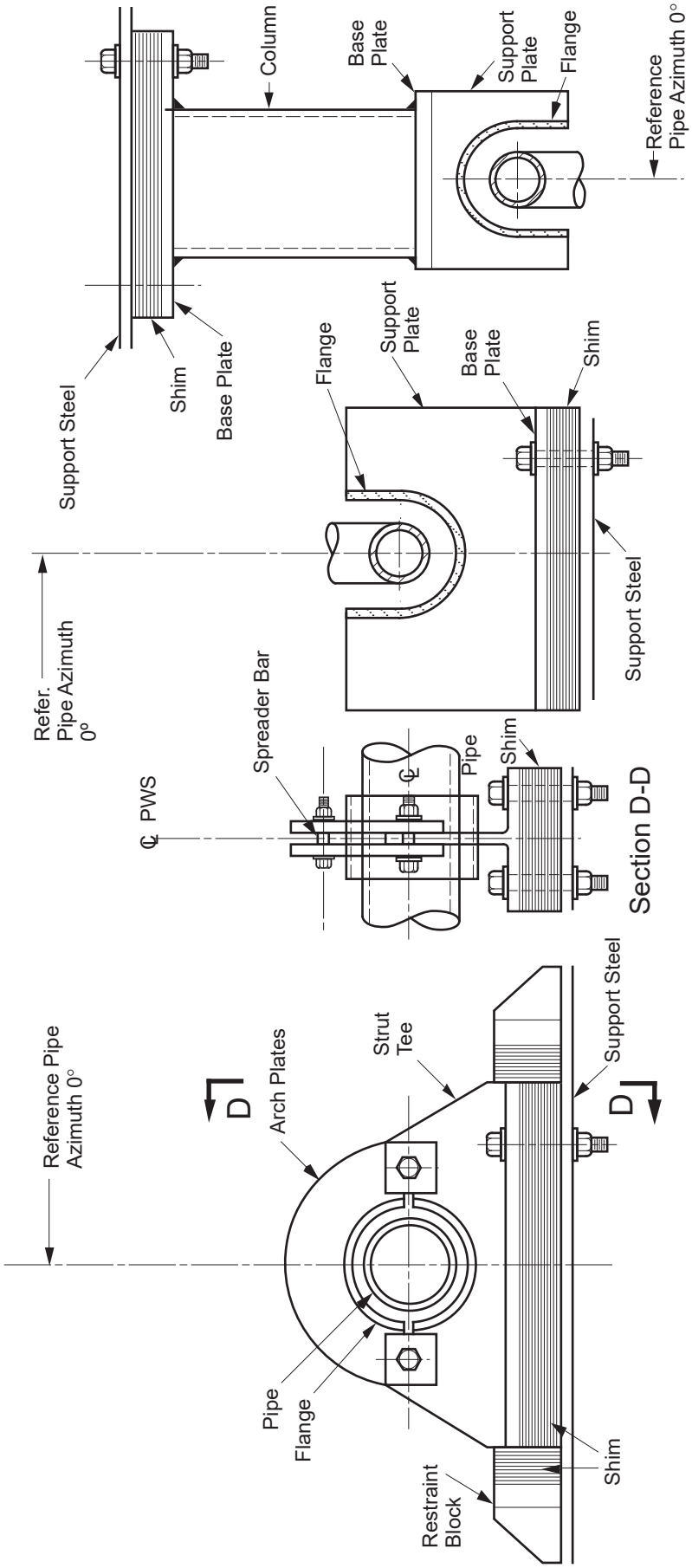

Columbia Generating Station
Final Safety Analysis Report

Rigid Type Pipe Whip Restraint Configuration

Draw. No. 990578.58	Rev.	Figure 3.6-22.4

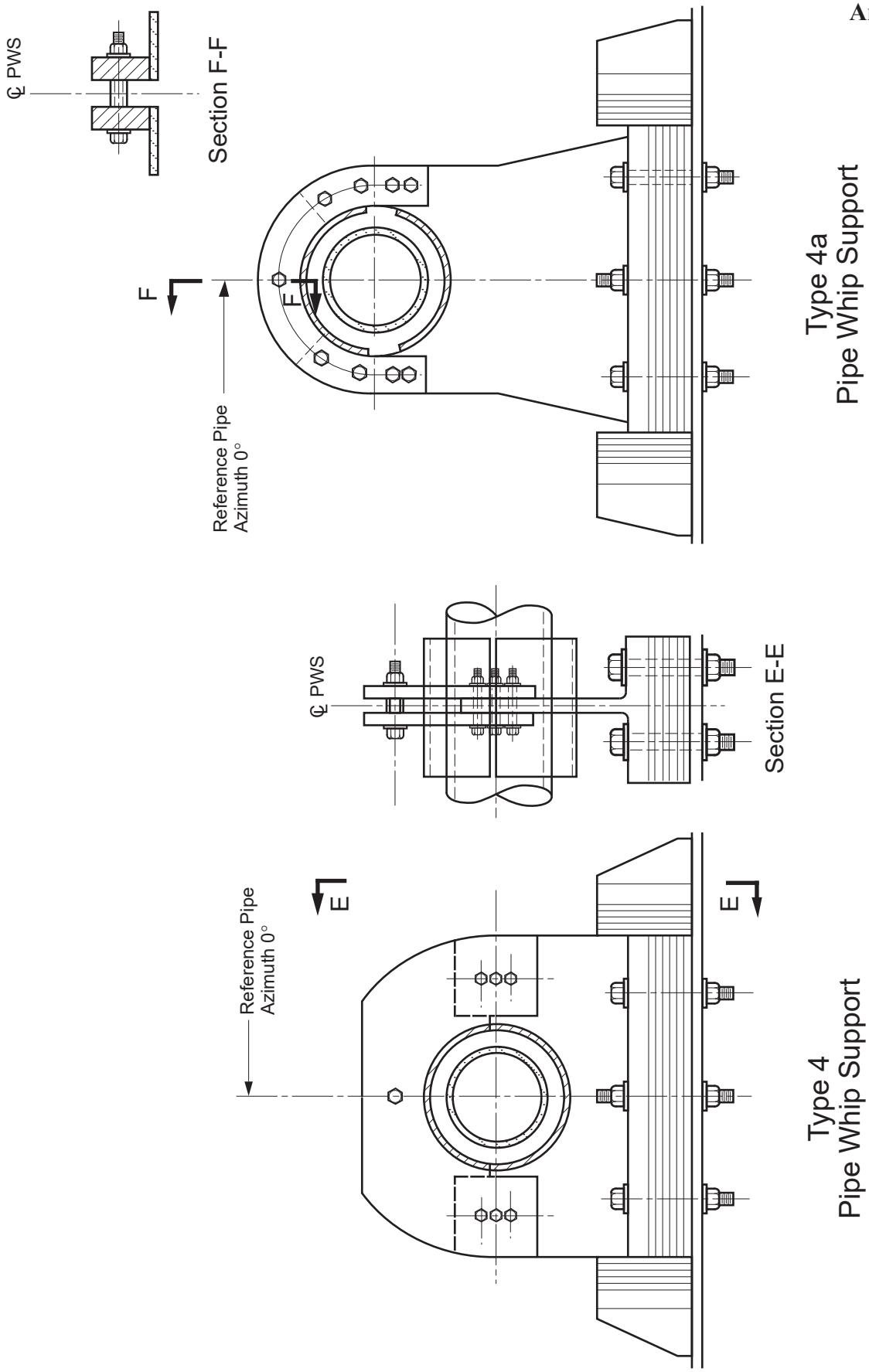

Columbia Generating Station
Final Safety Analysis Report

Rigid Type Pipe Whip Restraint Configuration

Draw. No. 990578.59	Rev.	Figure 3.6-22.5

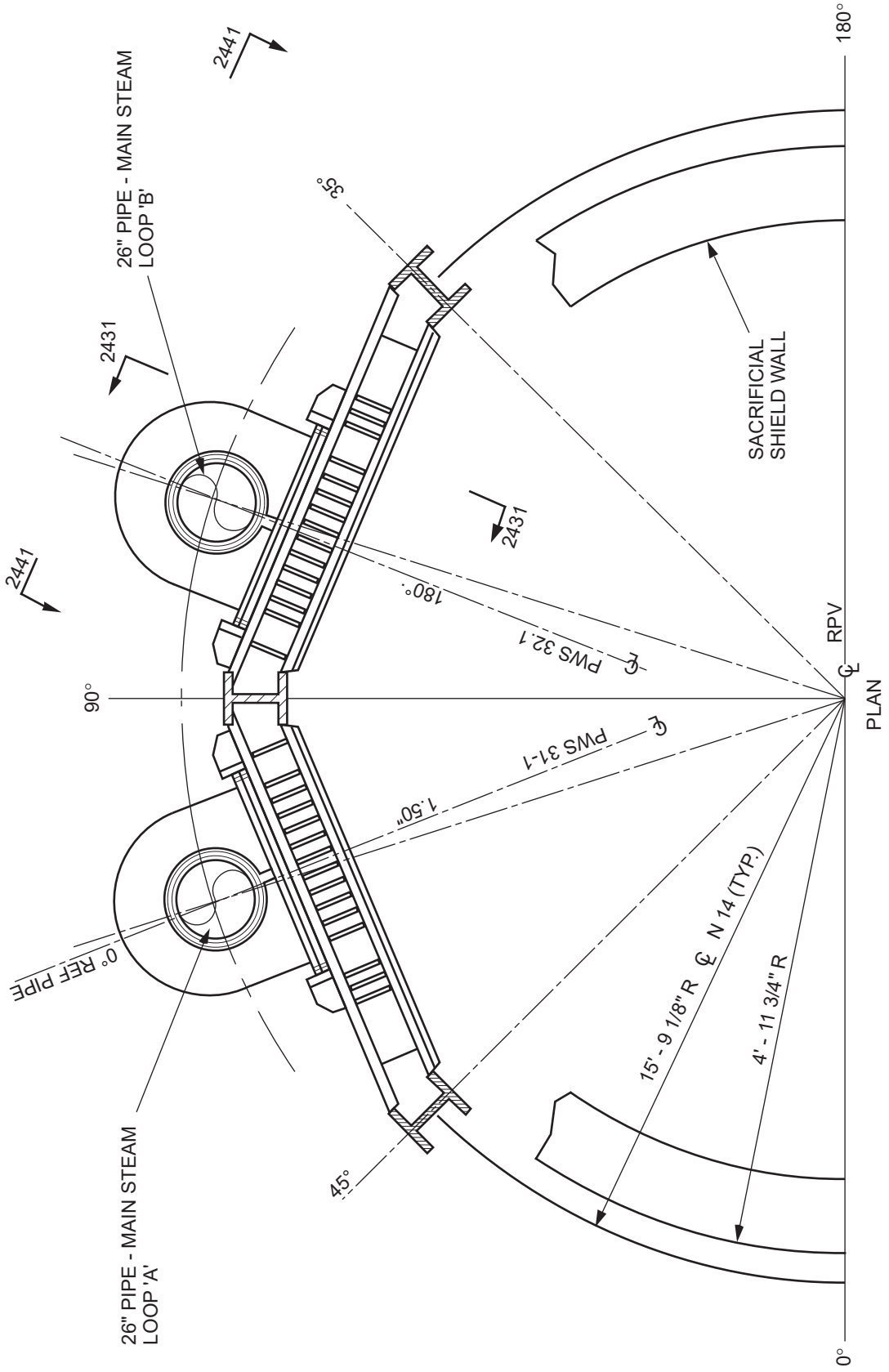

Columbia Generating Station **Final Safety Analysis Report**	**Pipe Whip Restraint Installation - Main Steam System**		
	Draw. No. **990578.60**	Rev.	Figure **3.6-23.1**

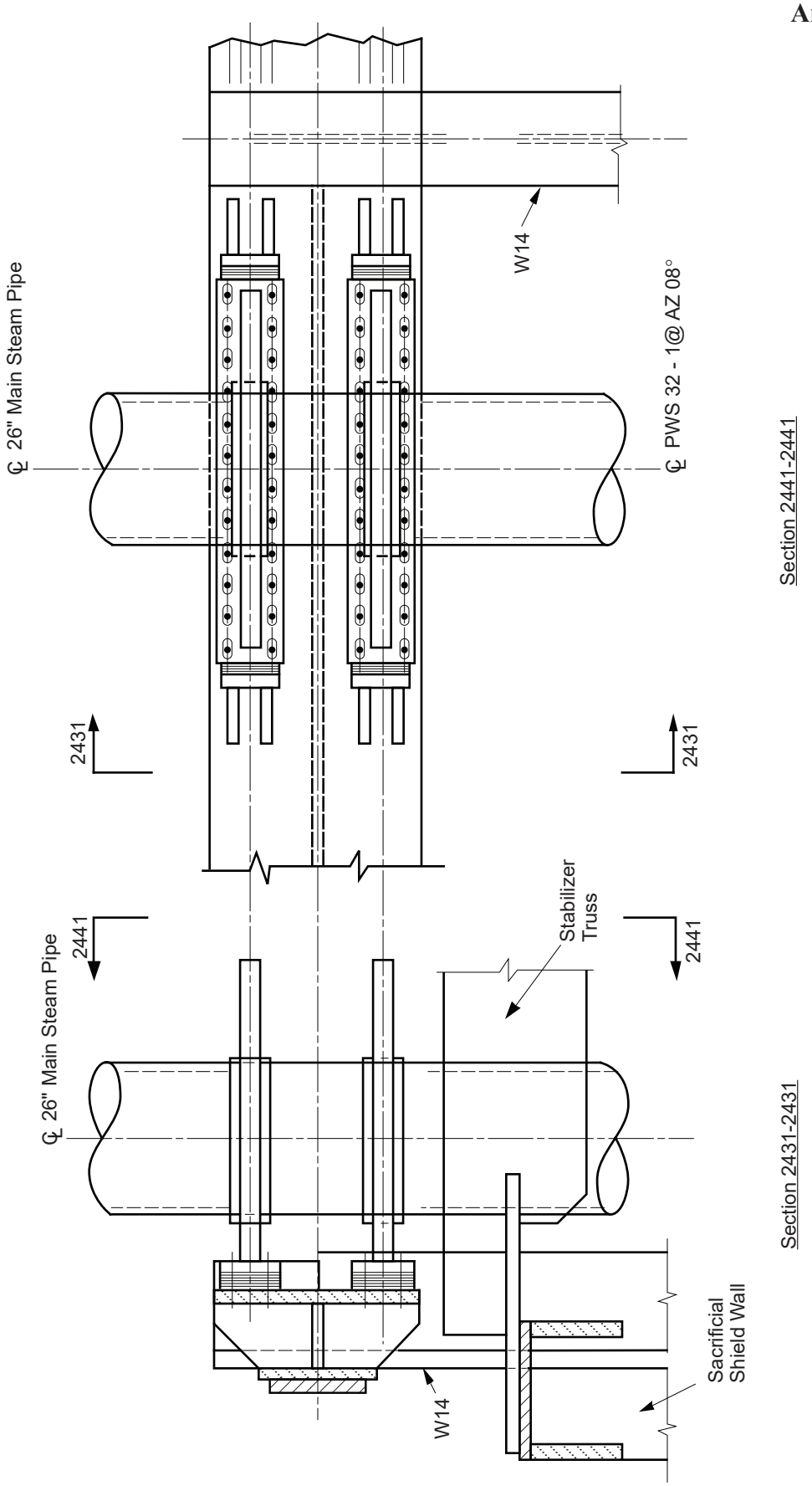

Columbia Generating Station
Final Safety Analysis Report

Pipe Whip Restraint Installation - Main Steam System

Draw. No. 990578.61	Rev.	Figure 3.6-23.2

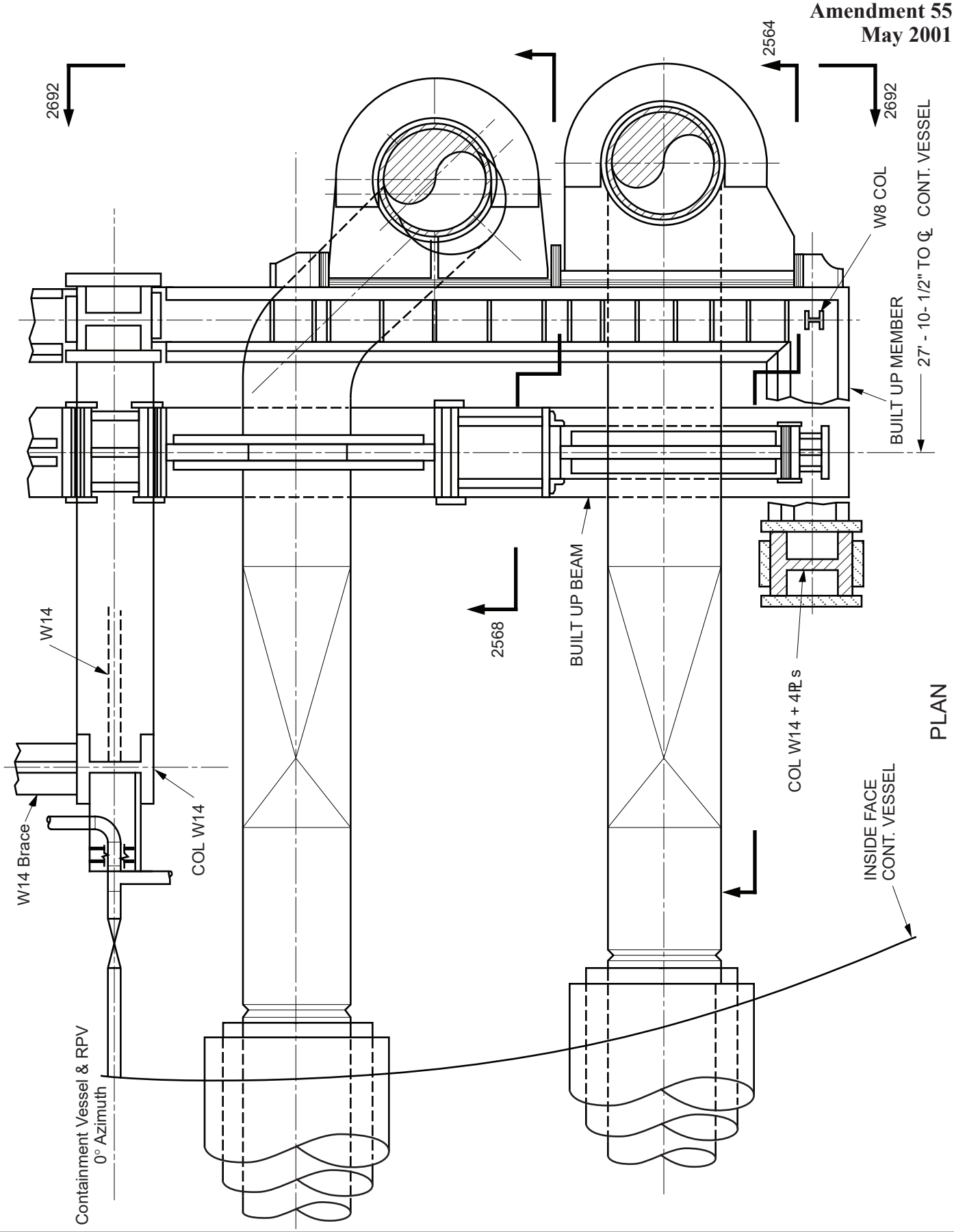

Columbia Generating Station
Final Safety Analysis Report

Pipe Whip Restraint Installation - Main Steam System

Draw. No. 990578.69	Rev.	Figure 3.6-23.3

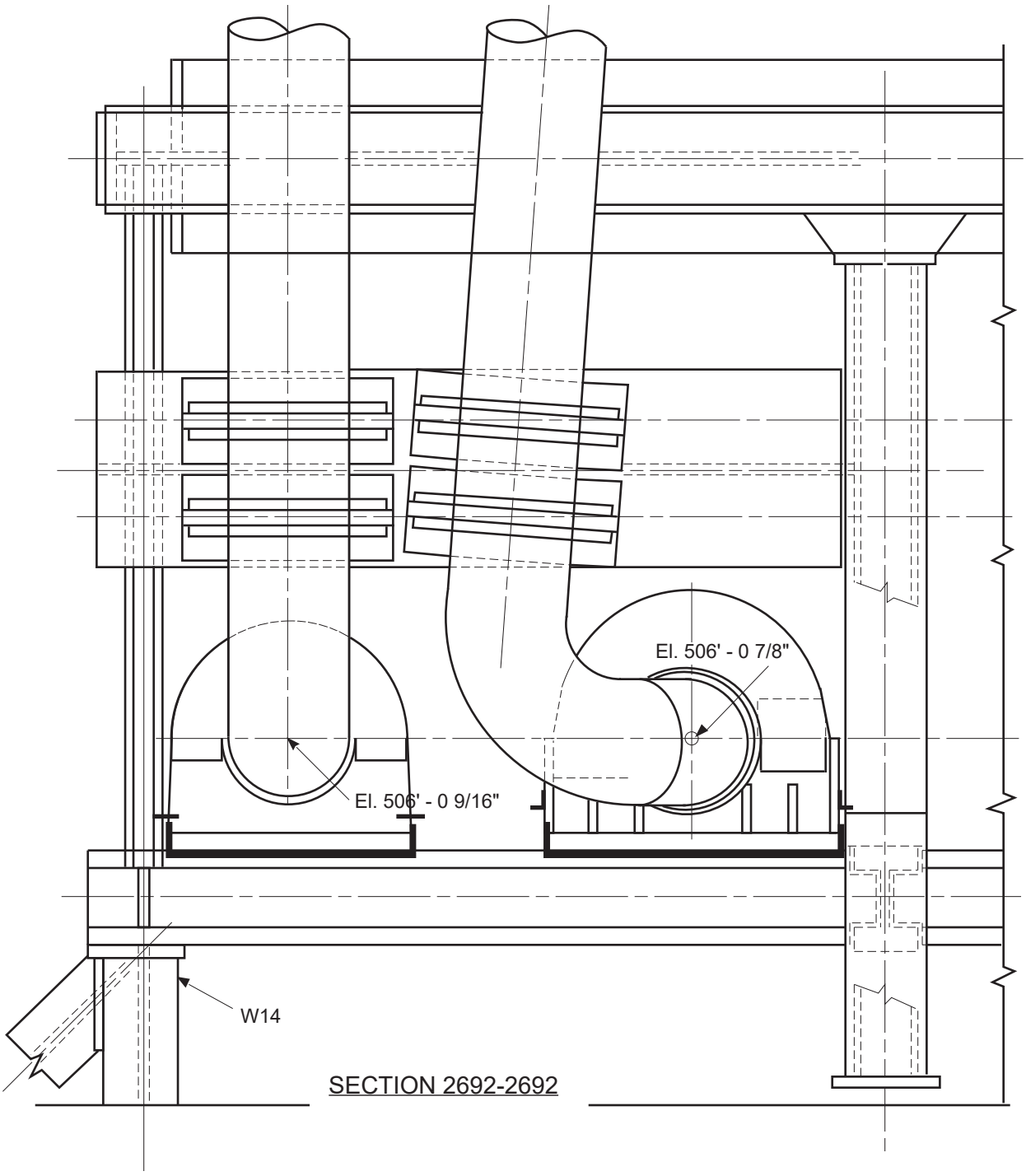

Columbia Generating Station
Final Safety Analysis Report

Pipe Whip Restraint Installation - Main Steam System

Draw. No. 010126.47	Rev.	Figure 3.6-23.4

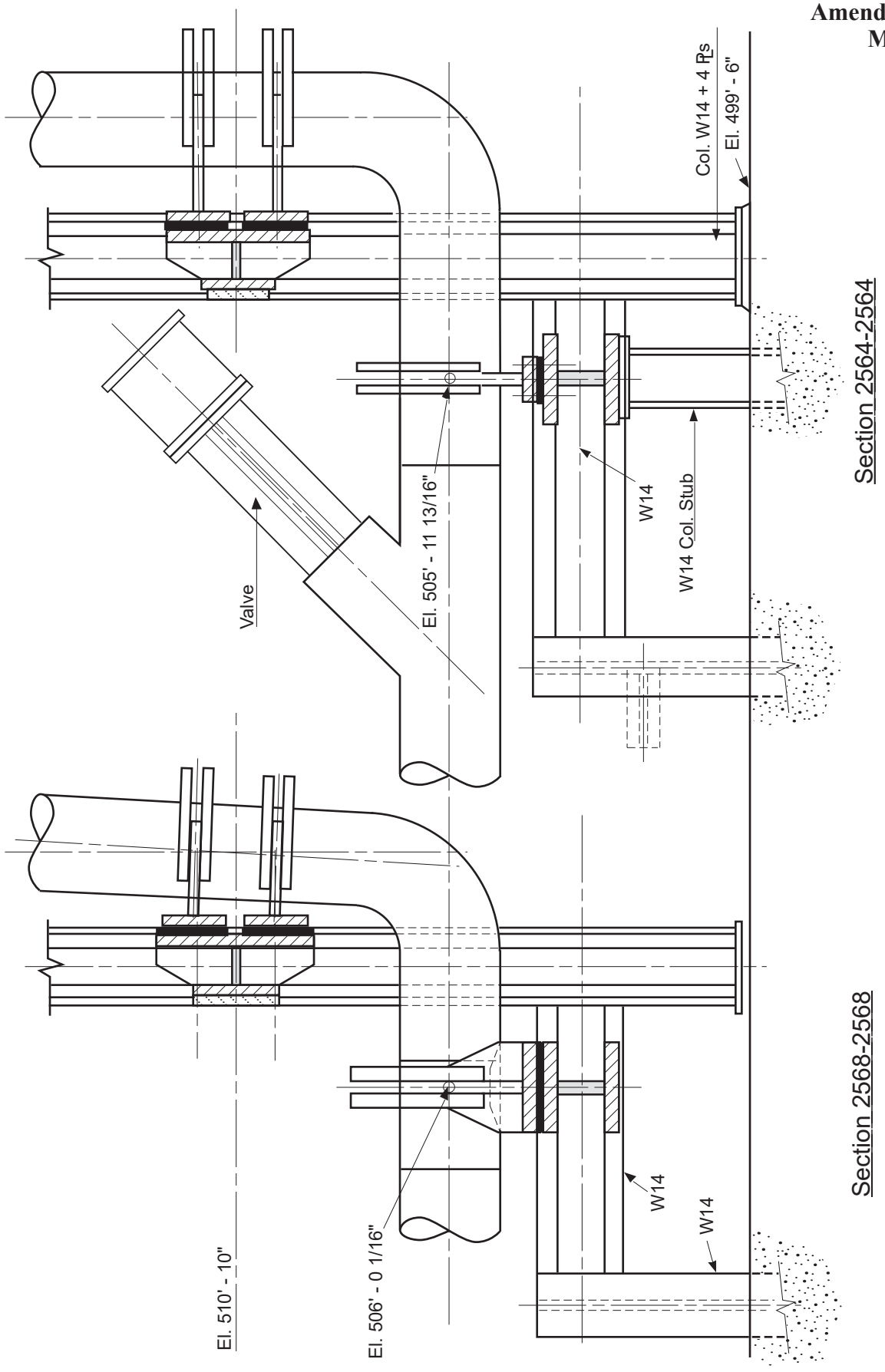

Columbia Generating Station
Final Safety Analysis Report

Pipe Whip Restraint Installation - Main Steam System

Draw. No. 010126.50	Rev.	Figure 3.6-23.5

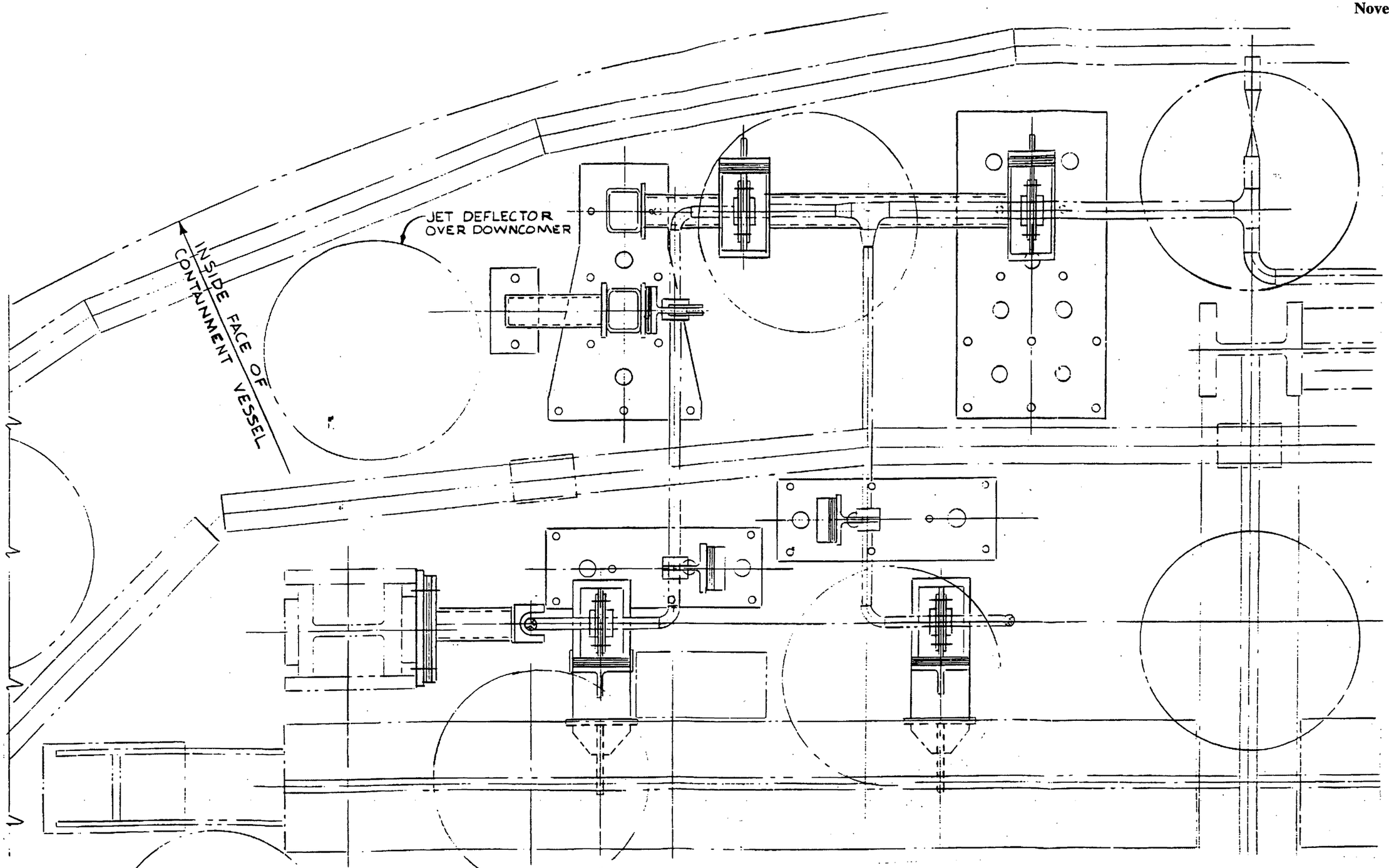

PLAN

Columbia Generating Station **Final Safety Analysis Report**	**Pipe Whip Restraint Installation - Main Steam System**		
	Draw. No. 020552.04	Rev.	Figure 3.6-23.6

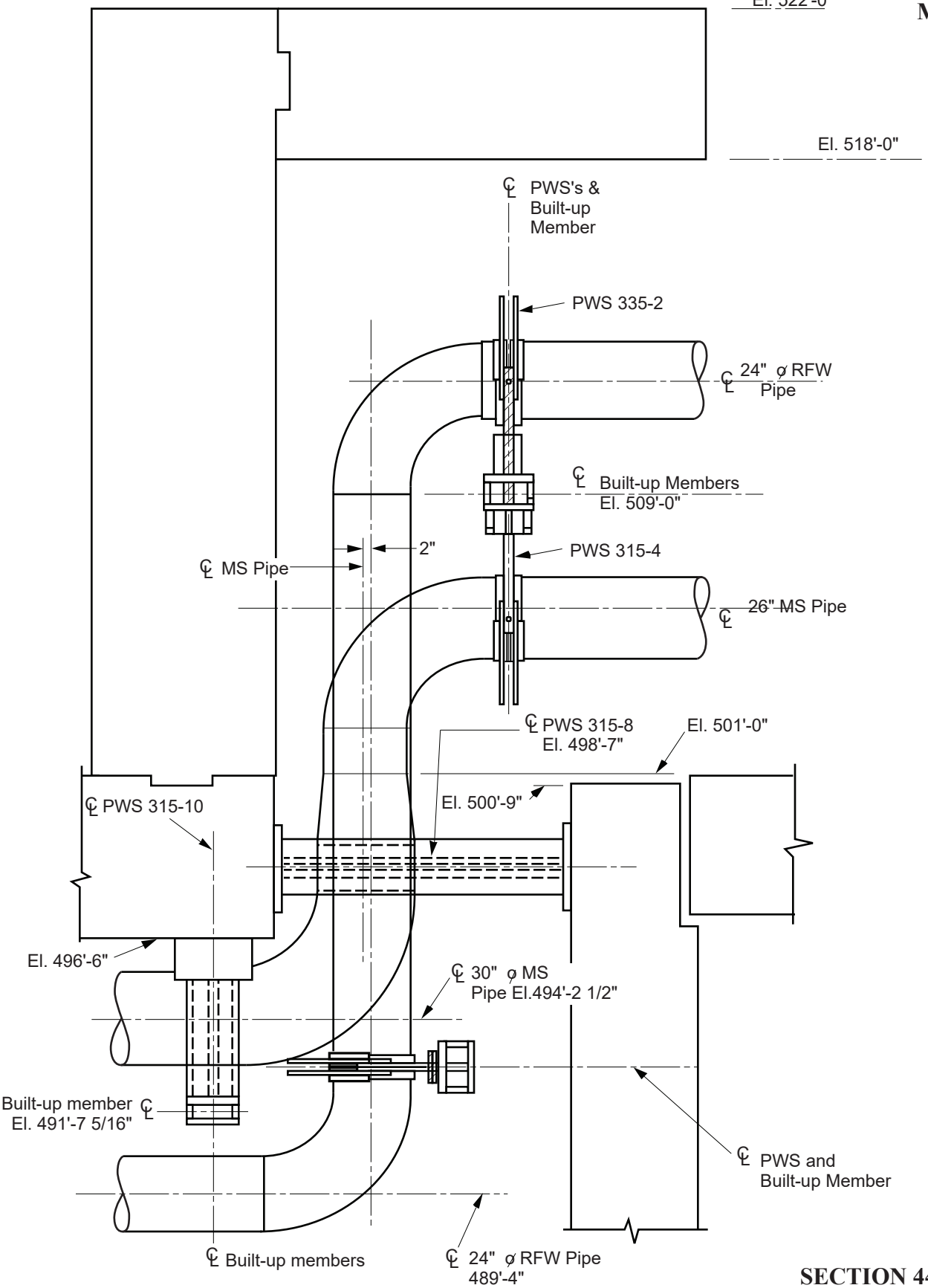

SECTION 4405-4405

Columbia Generating Station Final Safety Analysis Report	Pipe Whip Restraint Installation - Main Steam and Reactor Feedwater in Main Steam Tunnel		
	Draw. No. 990578.68	Rev.	Figure 3.6-24.1

Form No. 960690

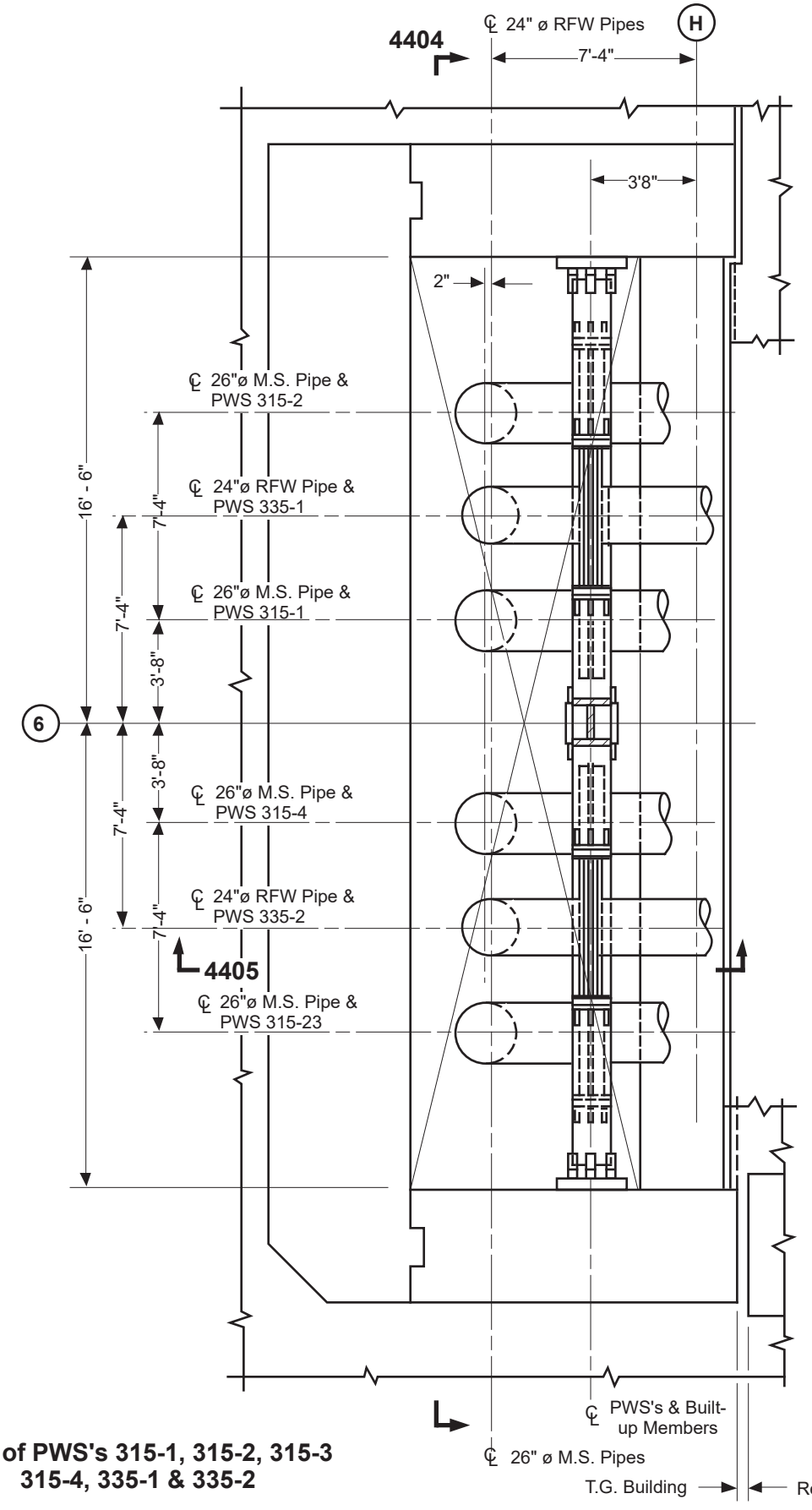

**Plan of PWS's 315-1, 315-2, 315-3
315-4, 335-1 & 335-2**

Columbia Generating Station **Final Safety Analysis Report**	**Pipe Whip Restraint Installation - Main Steam and Reactor Feedwater in Main Steam Tunnel**
	Draw. No. 010126.36 | **Rev.** | **Figure** 3.6-24.2

Form No. 960690

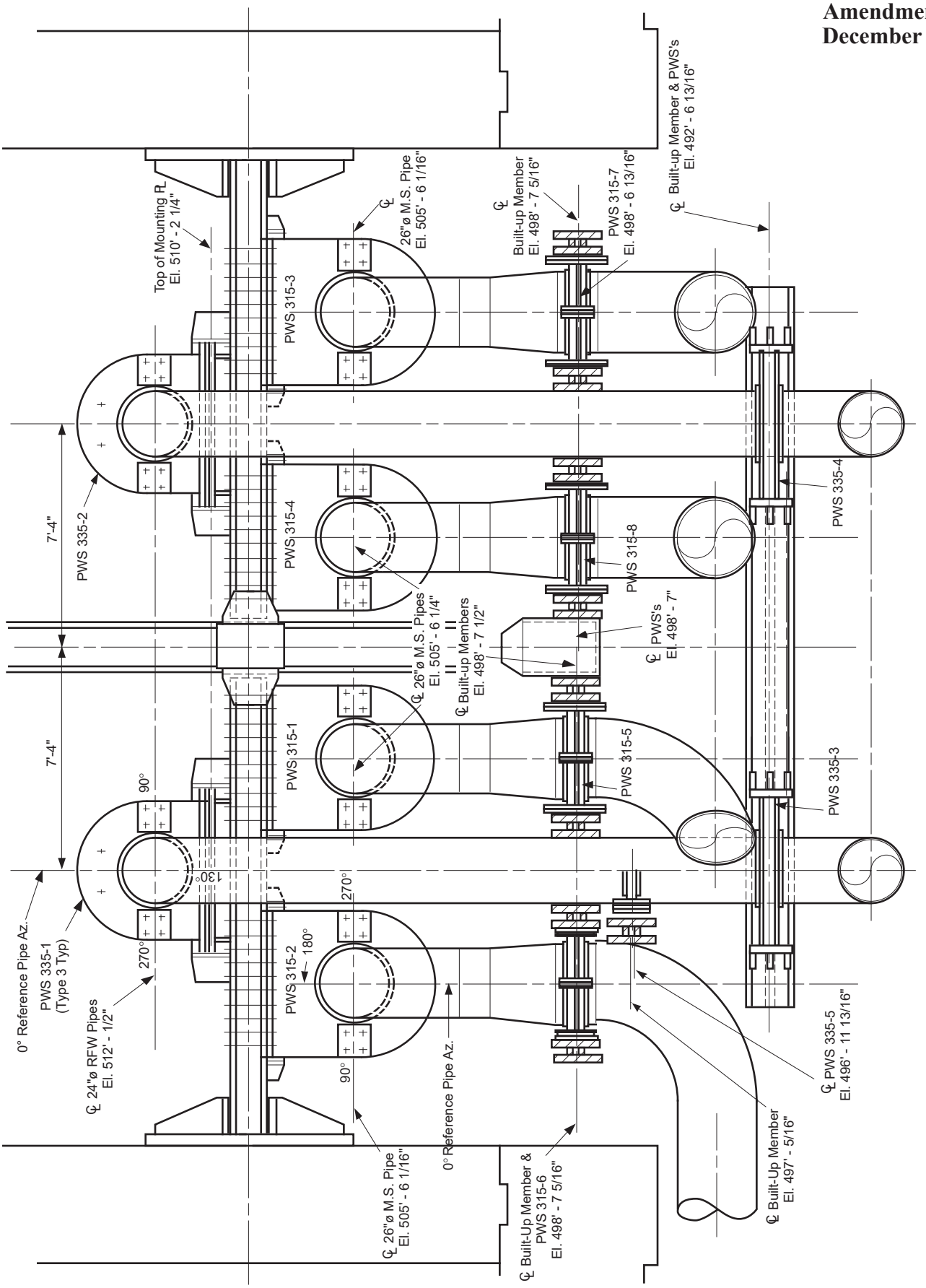

Section 4404-4404

Columbia Generating Station Final Safety Analysis Report	**Pipe Whip Restraint Installation - Main Steam and Reactor Feedwater in Main Steam Tunnel**
	Draw. No. **010126.45** | Rev. | Figure **3.6-24.3**

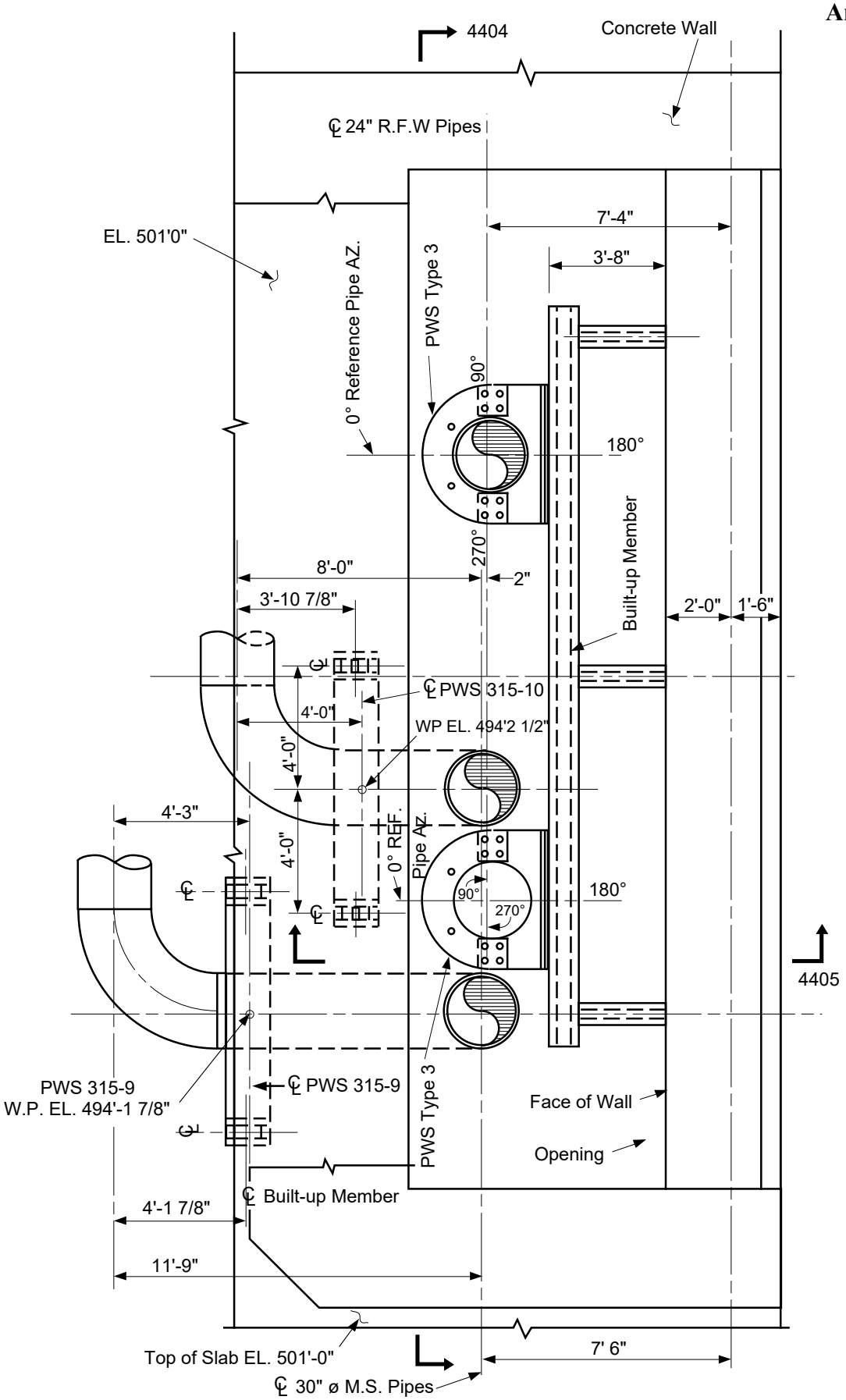

Columbia Generating Station **Final Safety Analysis Report**	**Pipe Whip Restraint Installation - Main Steam and Reactor Feedwater in Main Steam Tunnel**
	Draw. No. **010126.21** | Rev. | Figure **3.6-24.4**

Form No. 960690

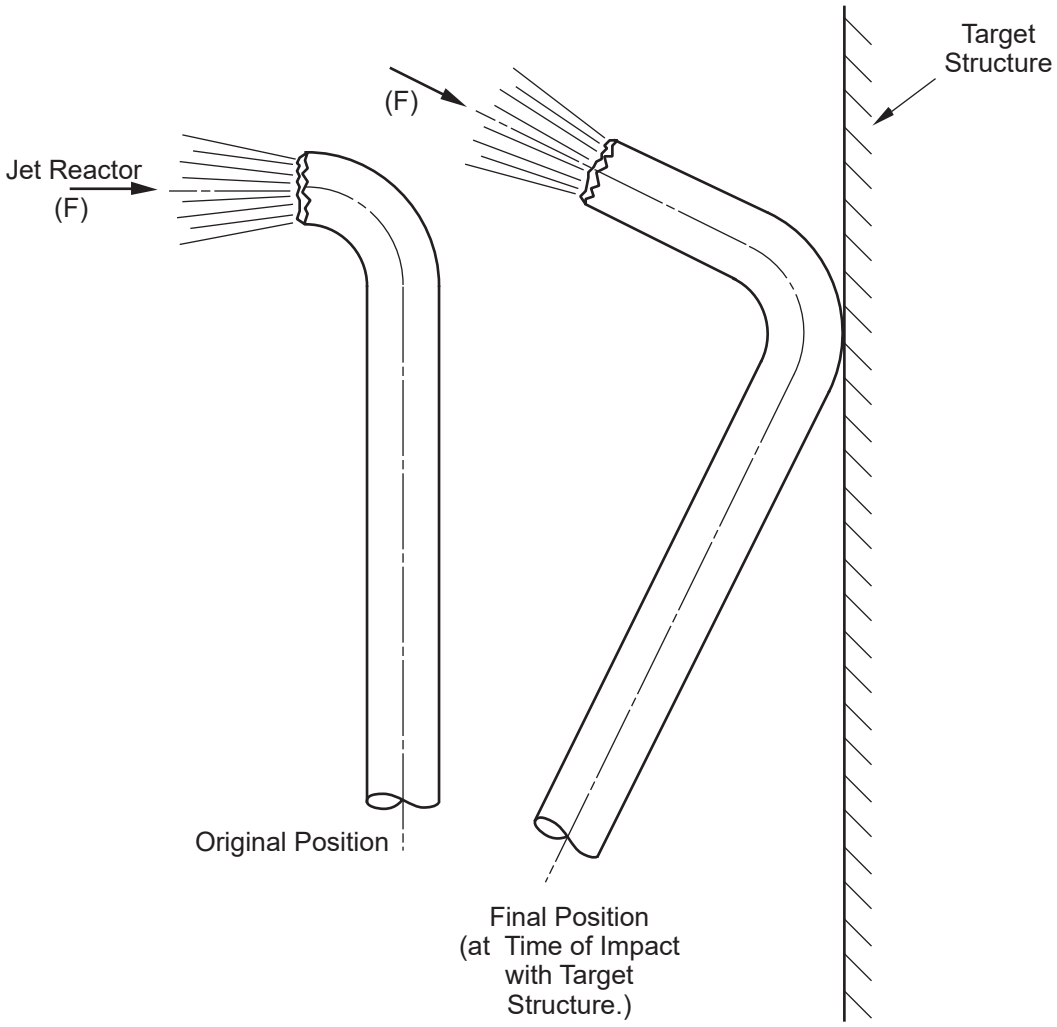

Note: Effects on target structure are:
(1) A jet reaction force, F (for time history description, see Fig. 3.6-27, and
(2) Impact due to energy accumulated by pipe while being accelerated from original to final position.
(3) Circumferential break is shown.

Columbia Generating Station Final Safety Analysis Report	Pipe Whip Impact on Target		
	Draw. No. 910402.22	Rev.	Figure 3.6-25

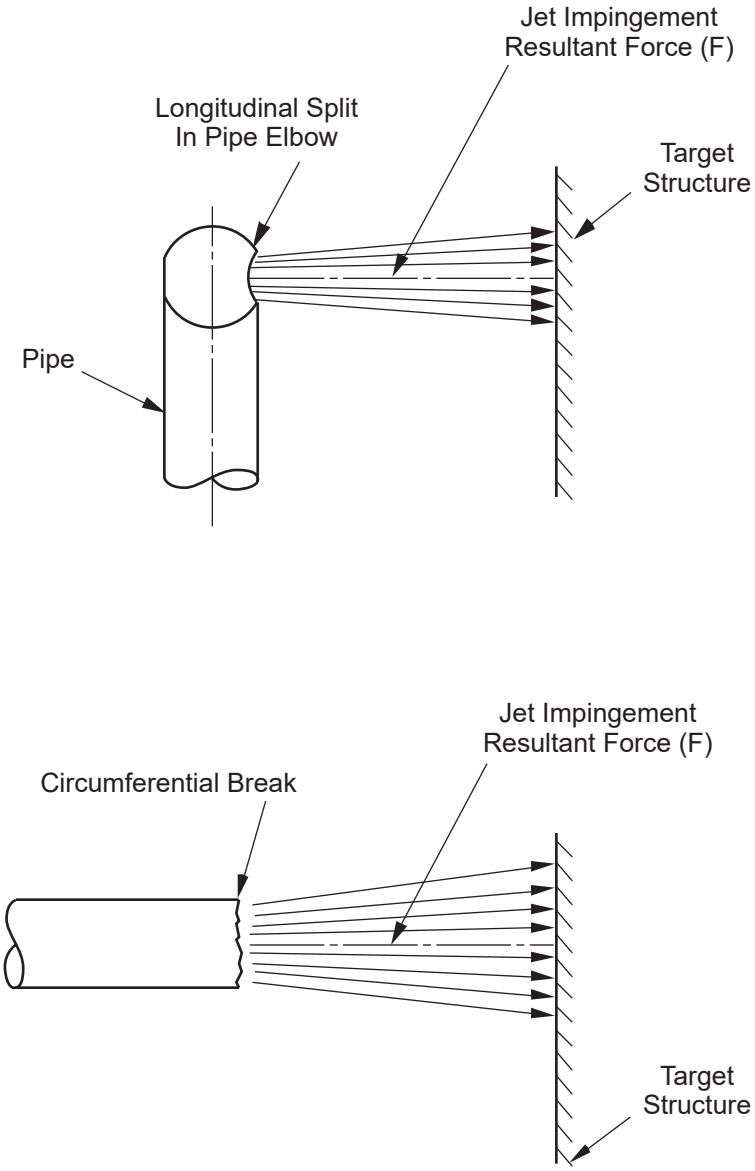

Note: For Time History Descriptions
See Fig. 3.6-27

Columbia Generating Station Final Safety Analysis Report	Jet Impingement on Target		
	Draw. No. 910402.23	Rev.	Figure 3.6-26

Trust Force Transient, Very Low Friction Flow

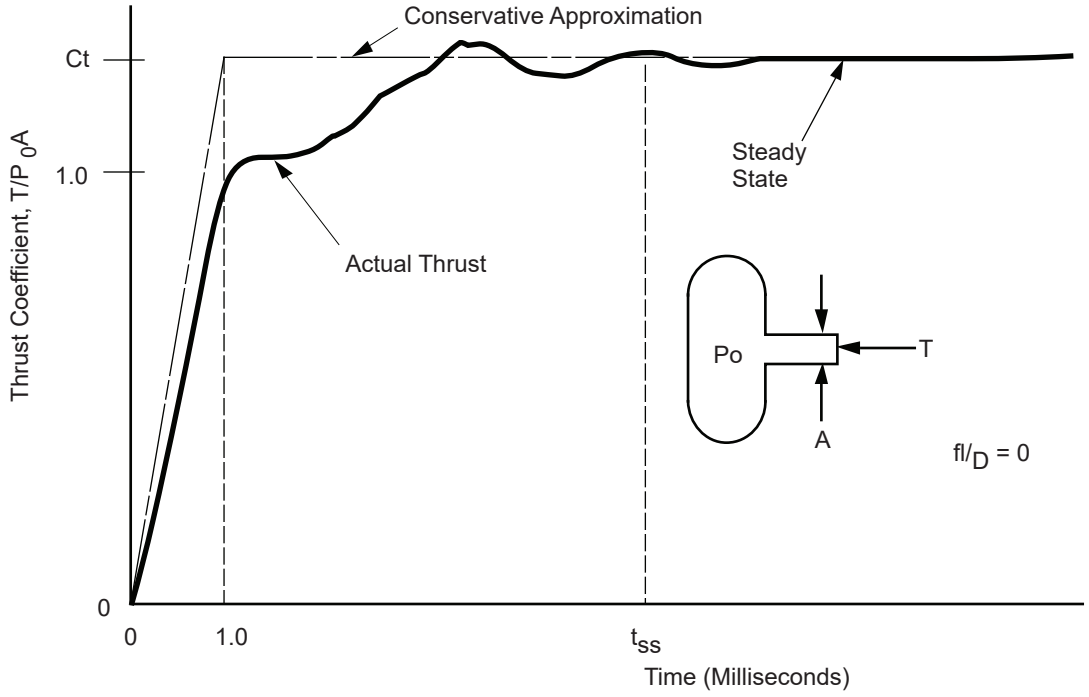

Thrust Force Transient, Friction Flow

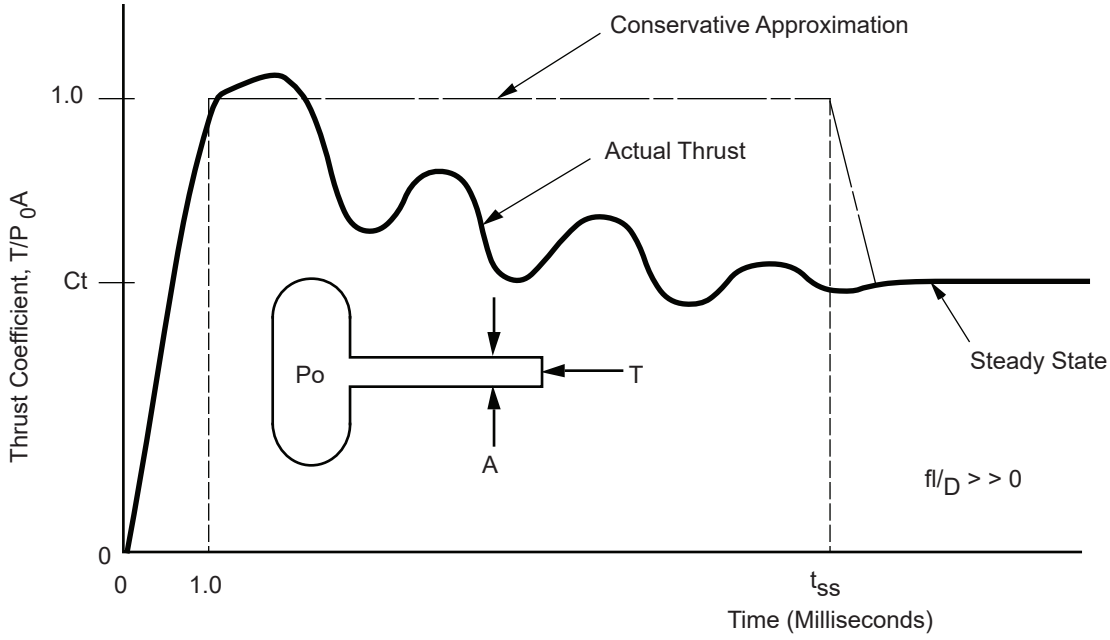

Columbia Generating Station Final Safety Analysis Report	Time History of Jet Impingement and Reaction Force		
	Draw. No. 990306.42	Rev.	Figure 3.6-27

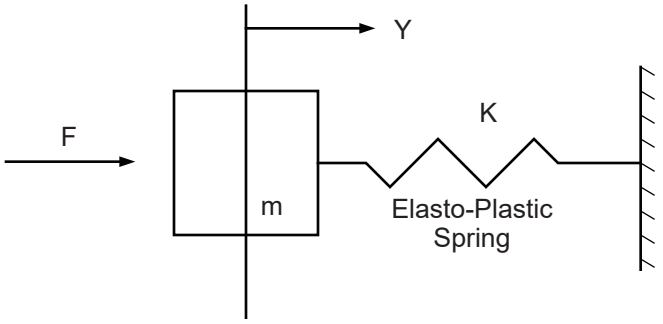

(A) Single degree of freedom mathematical idealization for a structure.

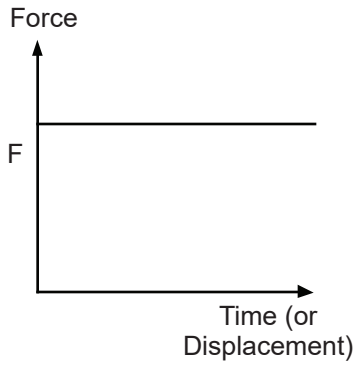

(B) Step Function Load

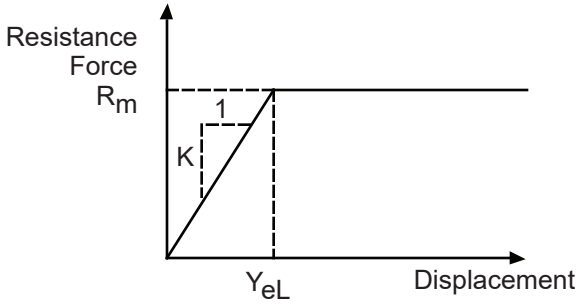

(C) Resistance Function

Columbia Generating Station Final Safety Analysis Report	Structural Response to a Step Function Loading		
	Draw. No. 970187.81	Rev.	Figure 3.6-28

Response	Resistance-Displacement Function	Available Strain Energy without other Loading	Available Strain Energy with other Loading
Elasto-Plastic	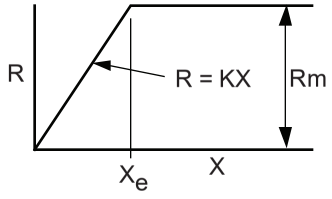	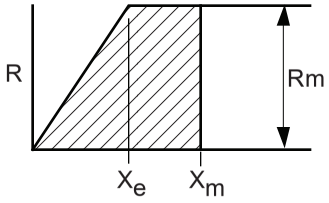	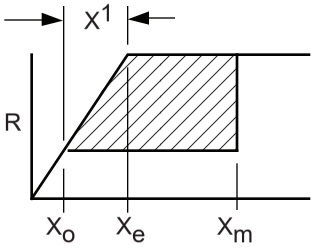

Note: Shaded Area (Strain Energy)
Must Equal E_S (from 3.6.1.6.3.2)

Columbia Generating Station Final Safety Analysis Report	Resistance-Displacement Functions with Associated Structural Response (with and without Effect of Other Loads)		
	Draw. No. 990306.43	Rev.	Figure 3.6-29

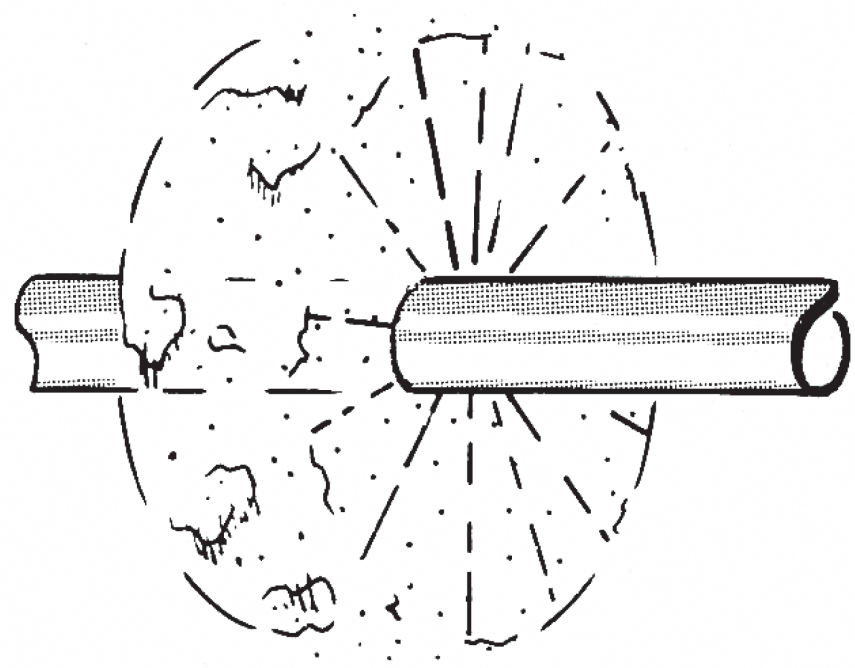

Columbia Generating Station
Final Safety Analysis Report

Jet from Circumferential Break with Ends Restrained (Fan Jet)

Draw. No. 020361.14	Rev.	Figure 3.6-30

Note: The wall rebound force is used in a direction opposite to the pipe or pipe jet impact load.

To determine R_m :

$$\frac{Y_{eL_2}}{R_{m_2}} = \frac{Y_{eL_1}}{R_{m_1}}$$

$$Y_{eL_2} = Y_{eL_1}\left(\frac{R_{m_2}}{R_{m_1}}\right)$$

$E1 = \mu Yel_2\ Rm_2 = ER = 1/2\ yel._1\ Rm_1$

$$\text{or } \mu YeL_1\left(\frac{R_{m_2}}{R_{m_1}}\right) Rm_2 = 1/2\ yel._1\ Rm_1$$

Therefore, $Rm_2^2 = 1/2\mu\ (RM_1^2)$

$$\text{or } Rm_2 = \frac{1}{\sqrt{2\mu}}\ Rm_1$$

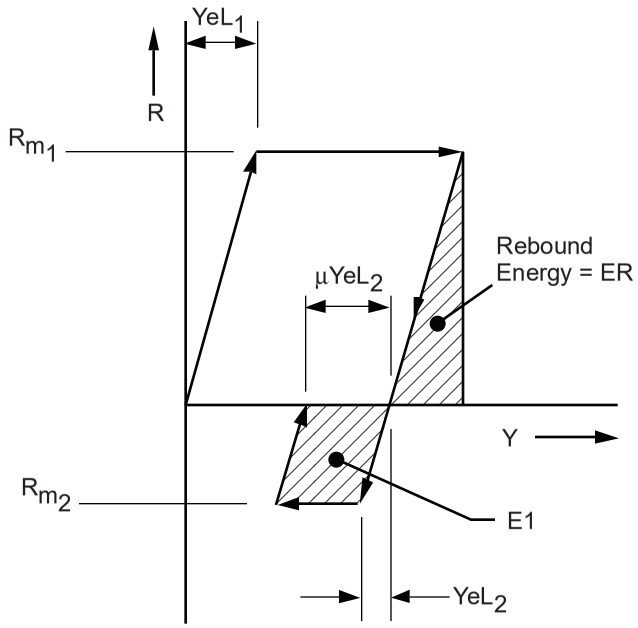

E1 = ER

Columbia Generating Station **Final Safety Analysis Report**	**Design for Wall Rebound**		
	Draw. No. 990306.44	Rev.	Figure 3.6-31

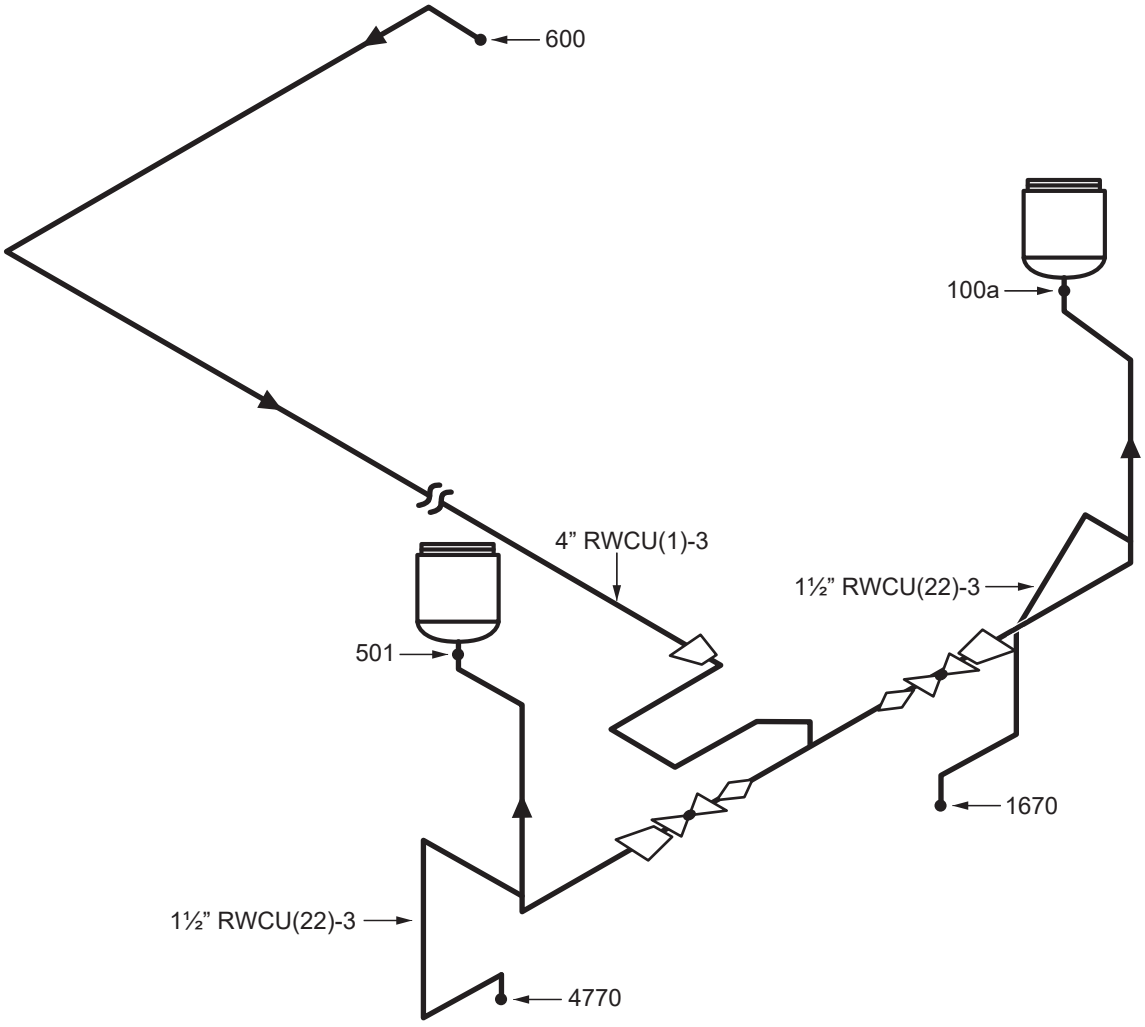

Based on M200-500,
ME-02-16-17, ME-02-16-18

Columbia Generating Station **Final Safety Analysis Report**	**Reactor Water Clean-Up** **RWCU-DM-1A & 1B Influent**		
	Draw. No. **160058.00**	Rev.	Figure **3.6-38.4**

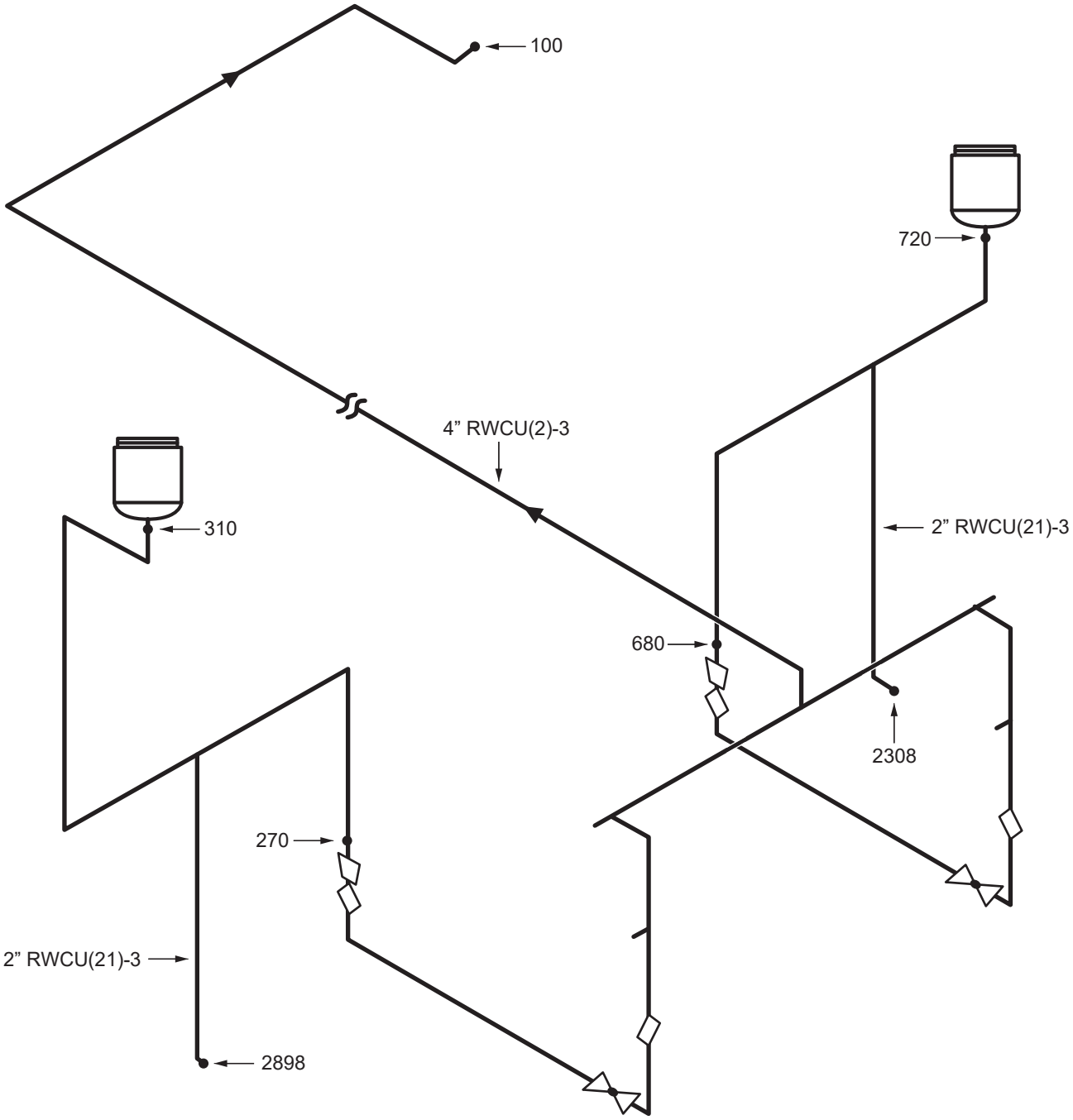

Based on M200-500,
ME-02-16-17, ME-02-16-18

Columbia Generating Station **Final Safety Analysis Report**	**Reactor Water Clean-Up** **RWCU-DM-1A & 1B Effluent**		
	Draw. No. **160058.01**	Rev.	Figure **3.6-38.5**

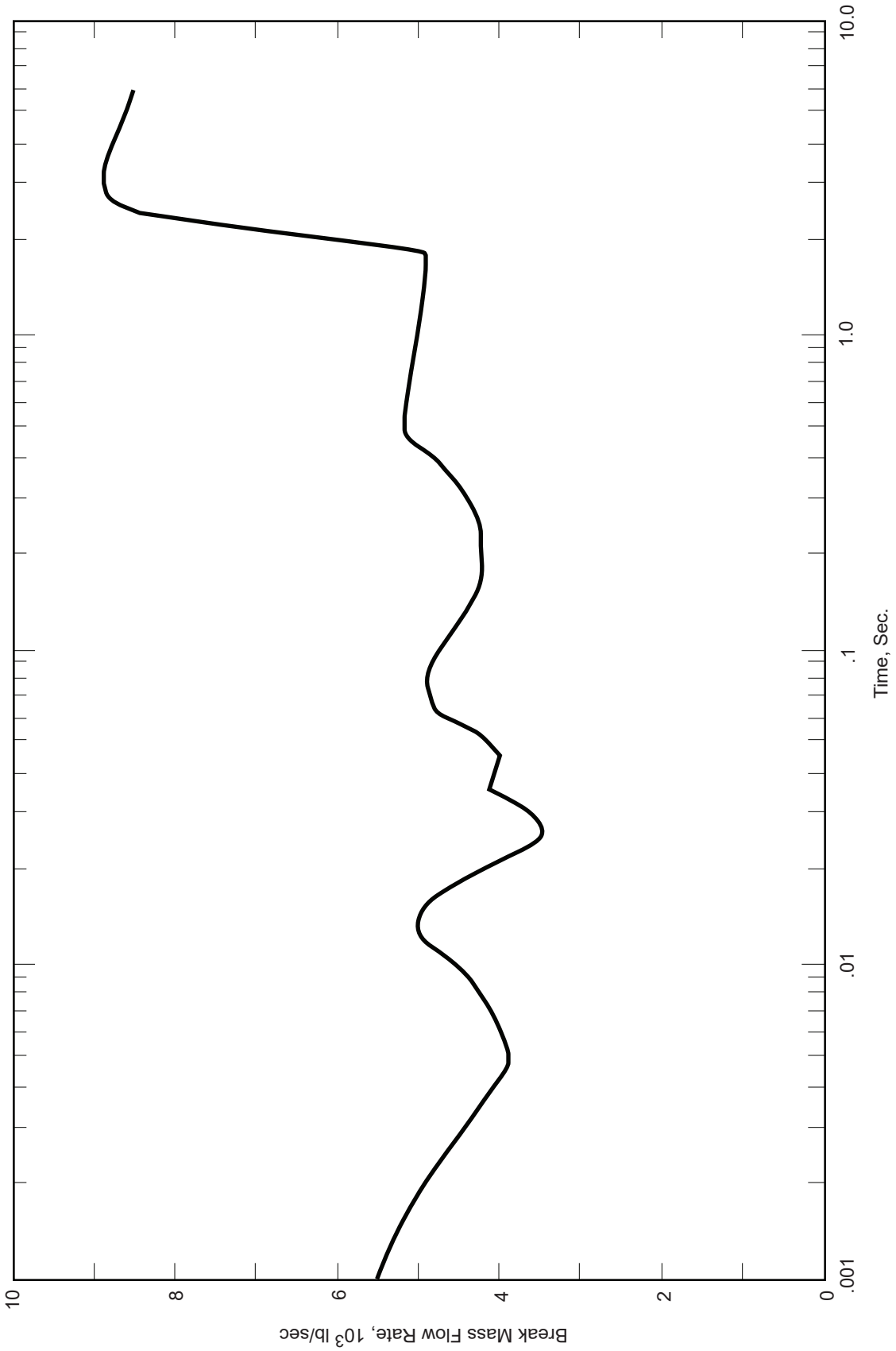

Columbia Generating Station Final Safety Analysis Report	Blowdown Mass Flow Rate from Postulated Crack in 26 in. Main Steam Line - Outside Primary Containment in Main Steam Tunnel		
	Draw. No. 990306.49	Rev.	Figure 3.6-61

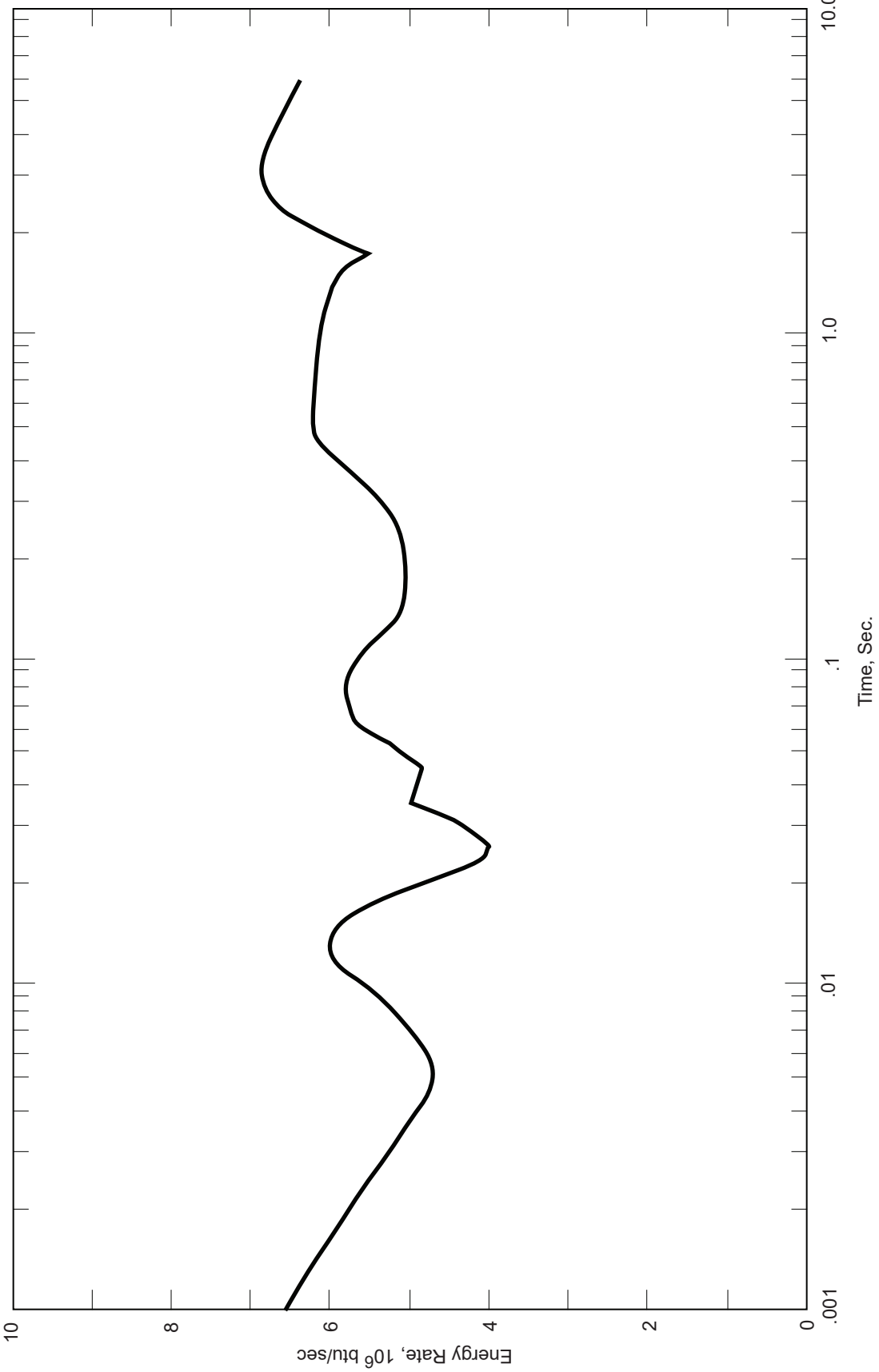

Columbia Generating Station Final Safety Analysis Report	Energy Release Rate from Postulated Crack in 26 in. Main Steam Line - Outside Primary Containment in Main Steam Tunnel		
	Draw. No. 990306.51	Rev.	Figure 3.6-62

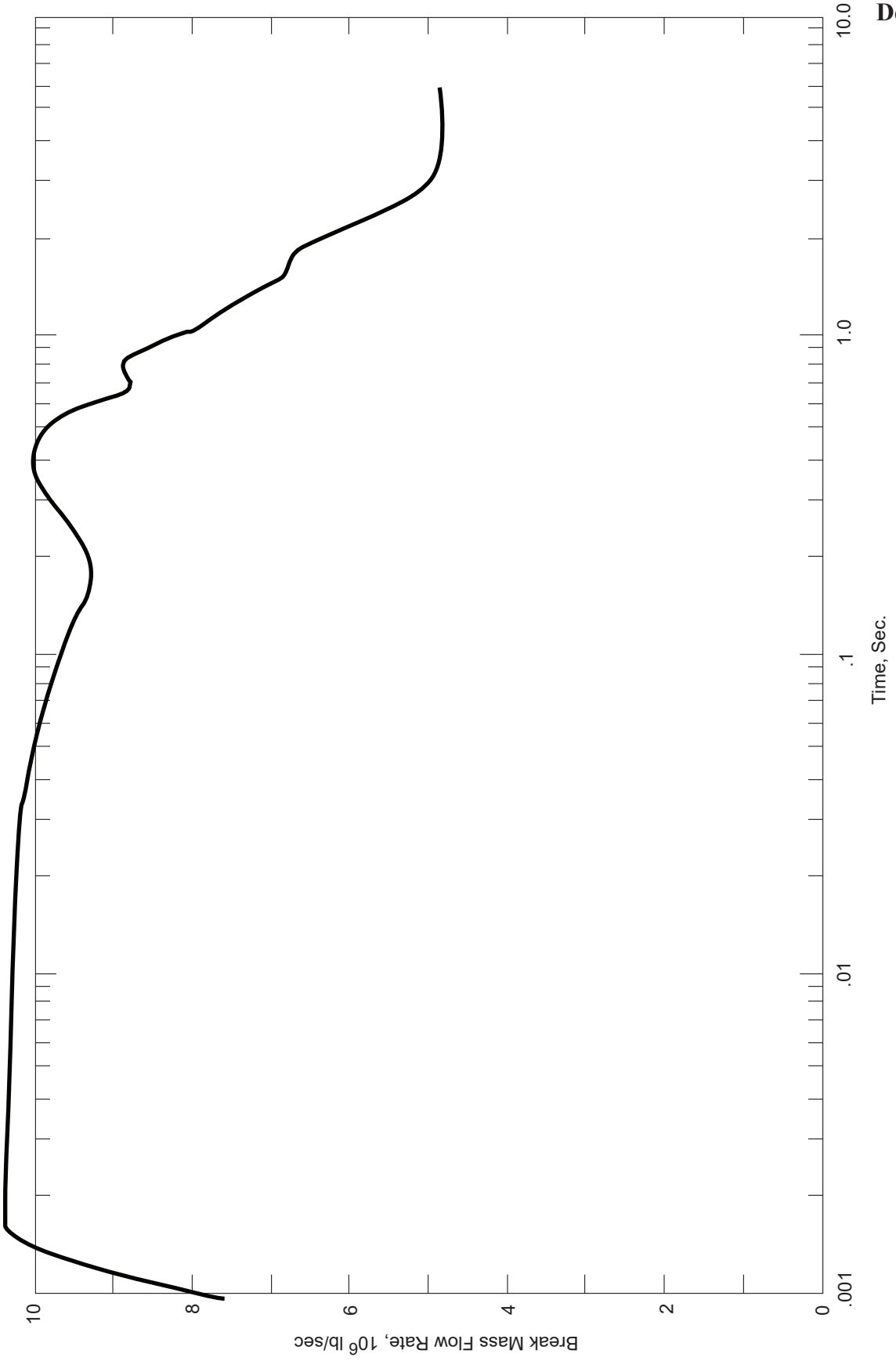

Columbia Generating Station Final Safety Analysis Report	Blowdown Mass Flow Rate from Postulated Crack in 24 in. Reactor Feed Line - Outside Primary Containment in Main Steam Tunnel		
	Draw. No. 990306.52	Rev.	Figure 3.6-63

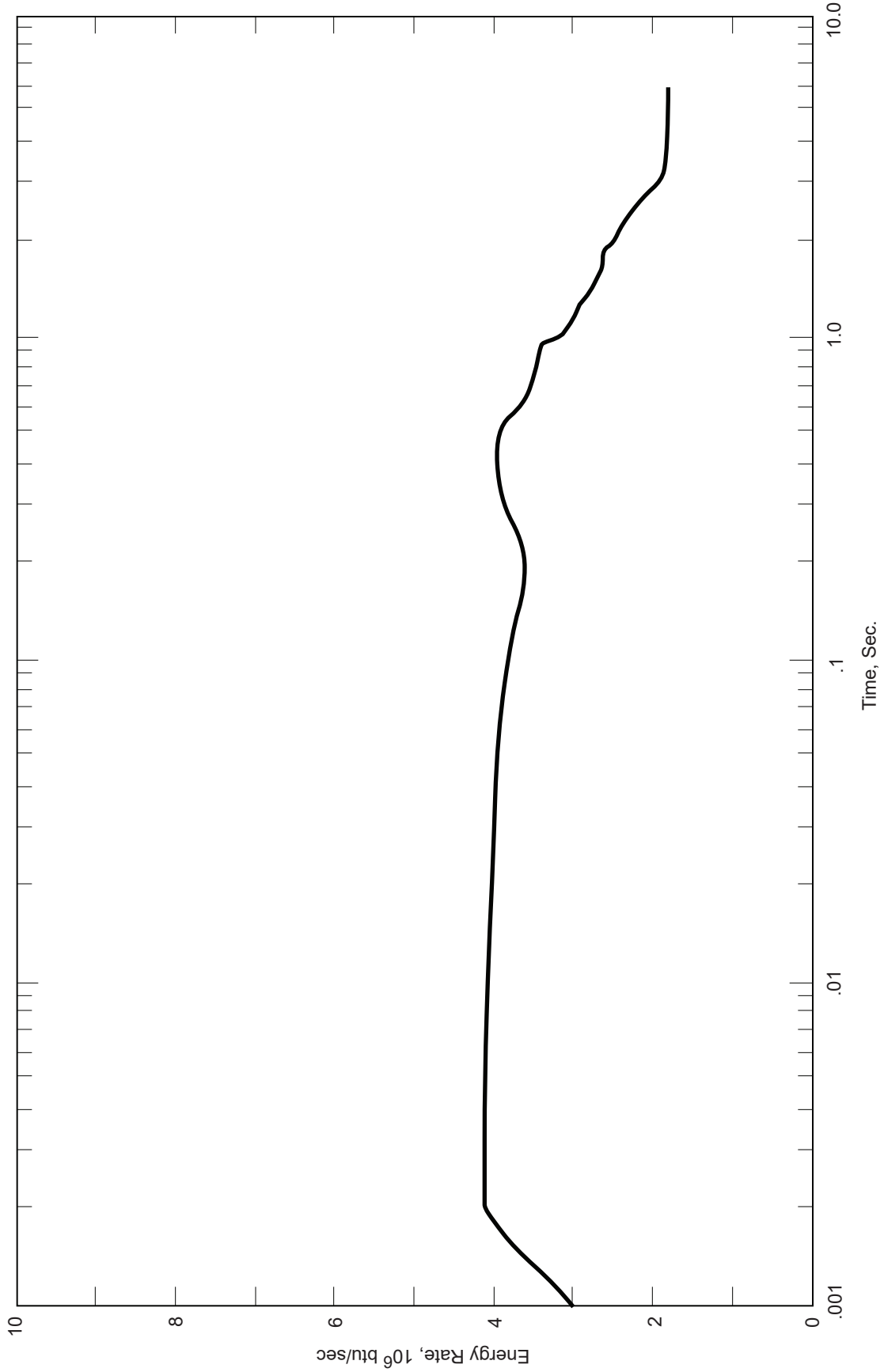

Columbia Generating Station
Final Safety Analysis Report

Energy Release Rate from Postulated Crack in 24 in. Reactor Feedwater Line - Outside Primary Containment in Main Steam Tunnel

Draw. No. 990306.53	Rev.	Figure 3.6-64

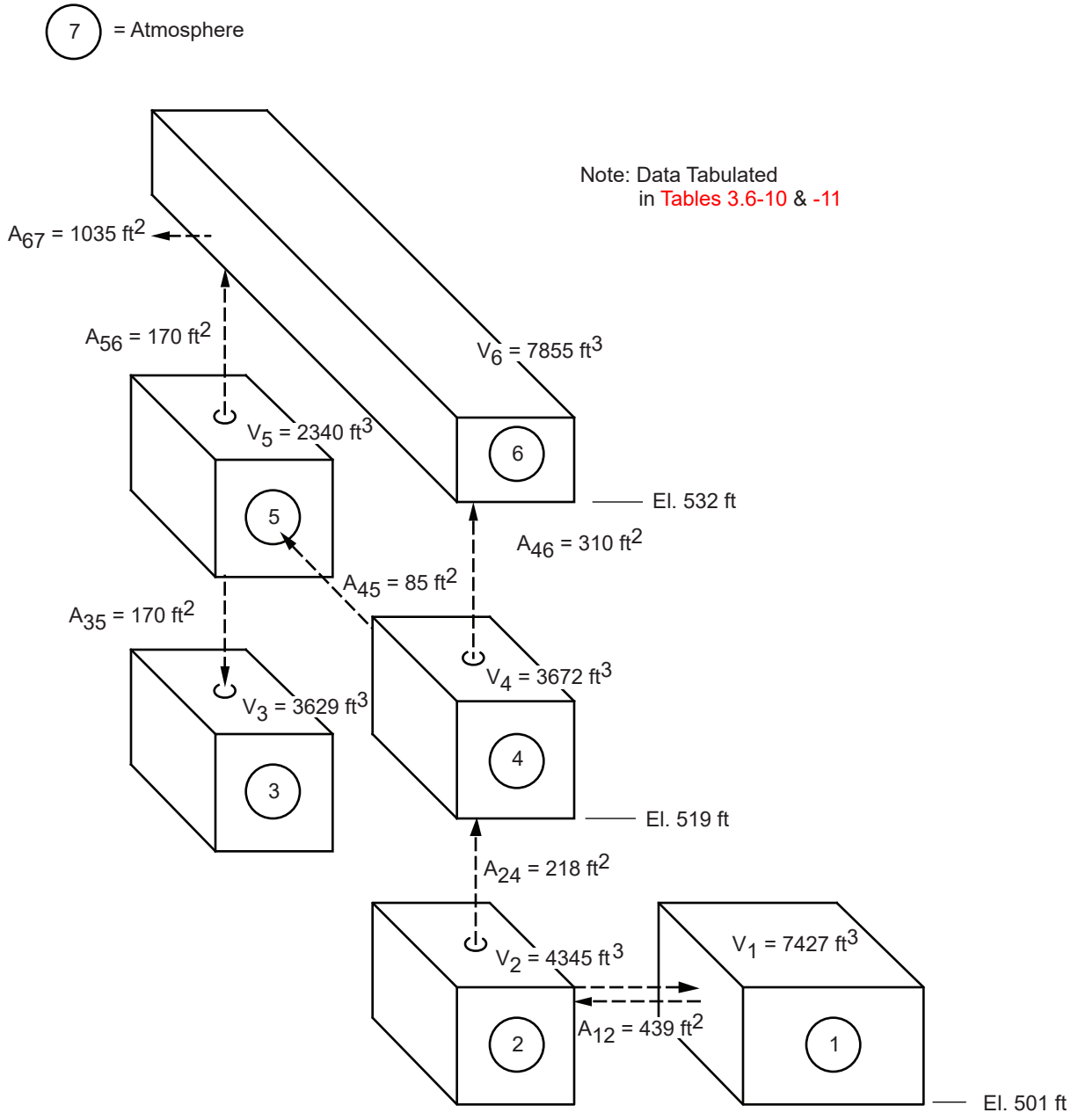

Columbia Generating Station Final Safety Analysis Report	Nodalization Scheme for Postulated Pipe Break in Main Steam Tunnel		
	Draw. No. 990306.56	Rev.	Figure 3.6-67

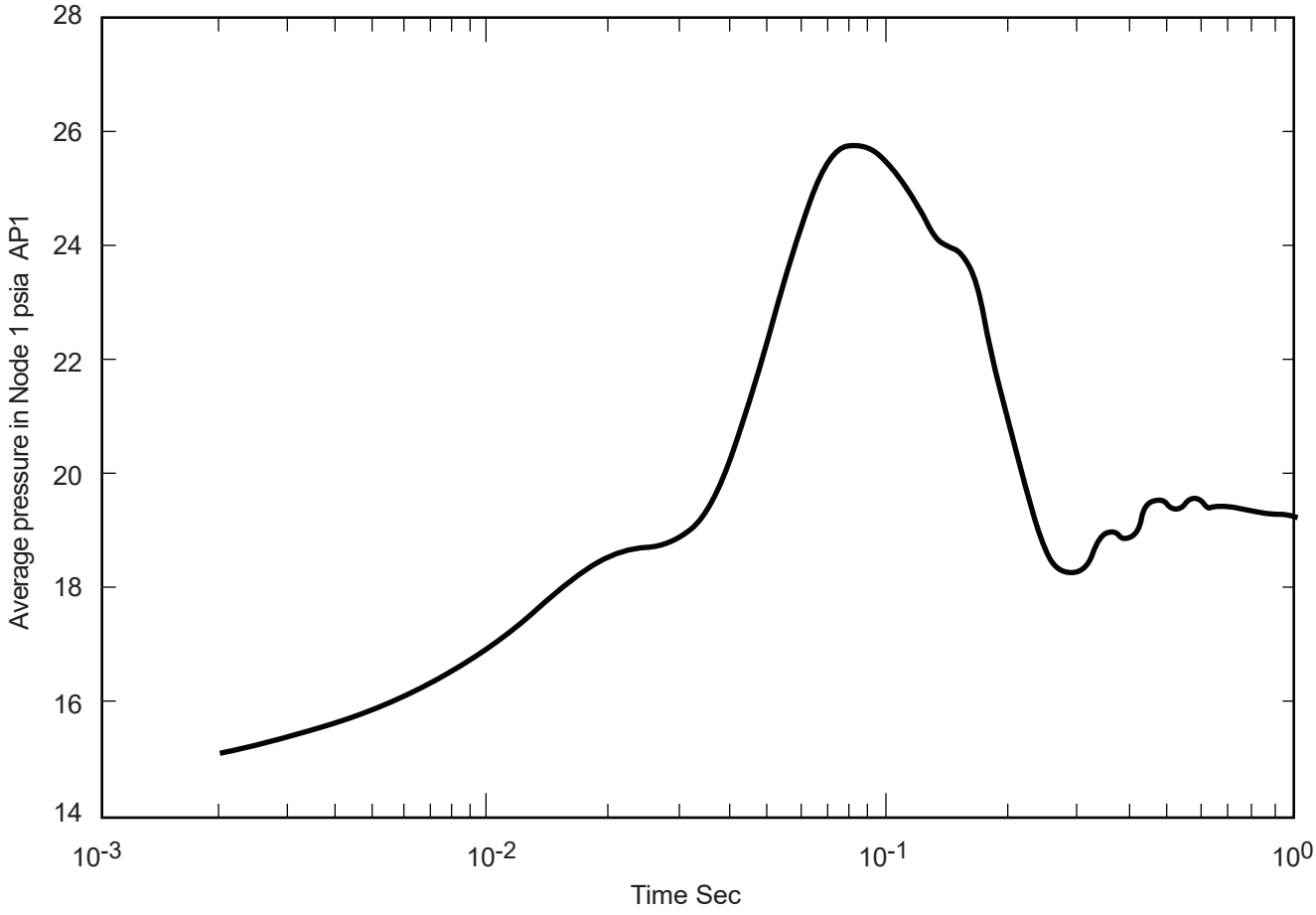

Columbia Generating Station Final Safety Analysis Report	Pressure Transient in Node 1 of Main Steam Tunnel after a Postulated Main Steam Pipe Break in Node 1 of Main Steam Tunnel		
	Draw. No. 970187.87	Rev.	Figure 3.6-68

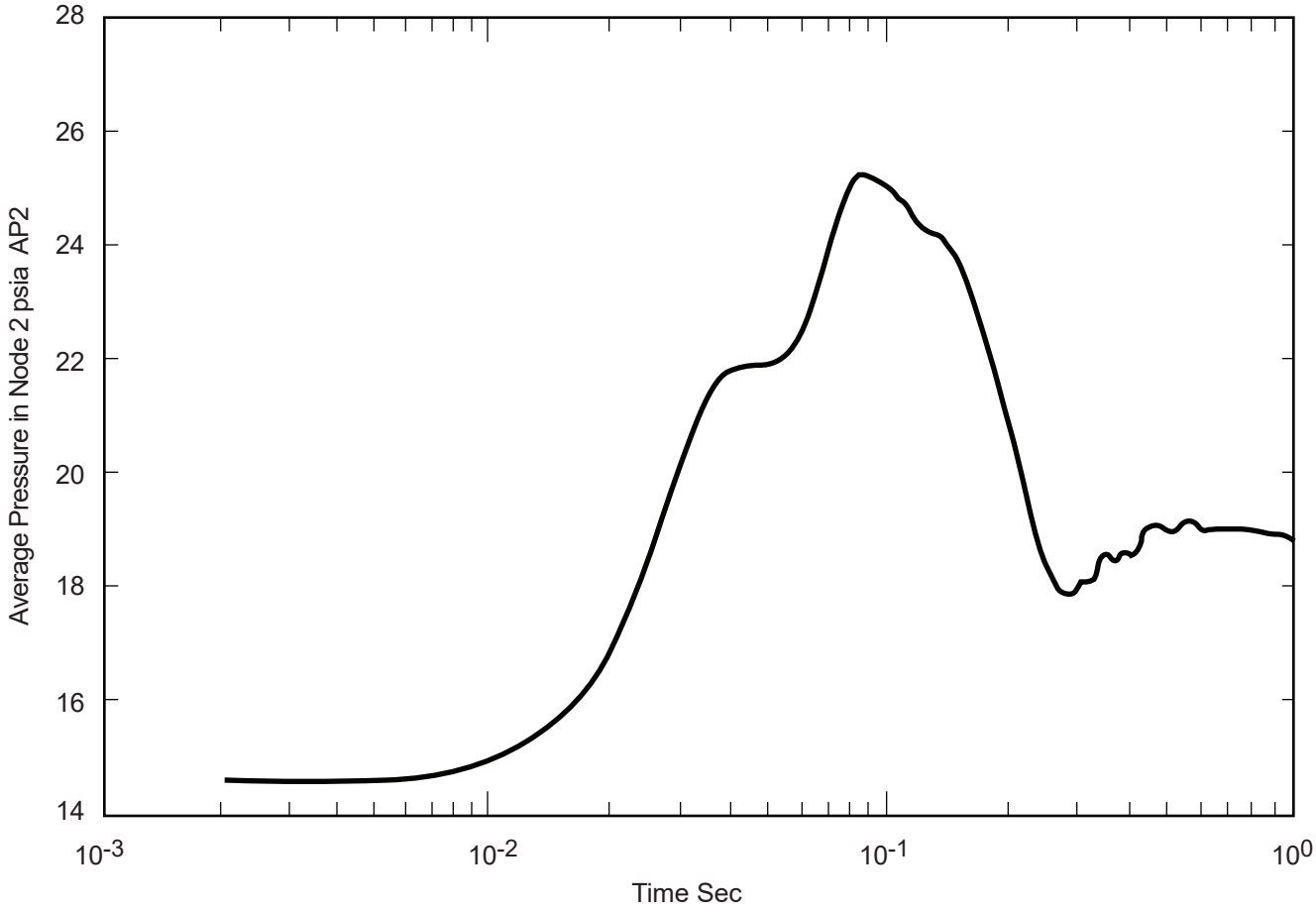

Columbia Generating Station Final Safety Analysis Report	Pressure Transient in Node 2 of Main Steam Tunnel after a Postulated Main Steam Pipe Break in Node 1 of Main Steam Tunnel		
	Draw. No. 970187.88	Rev.	Figure 3.6-69

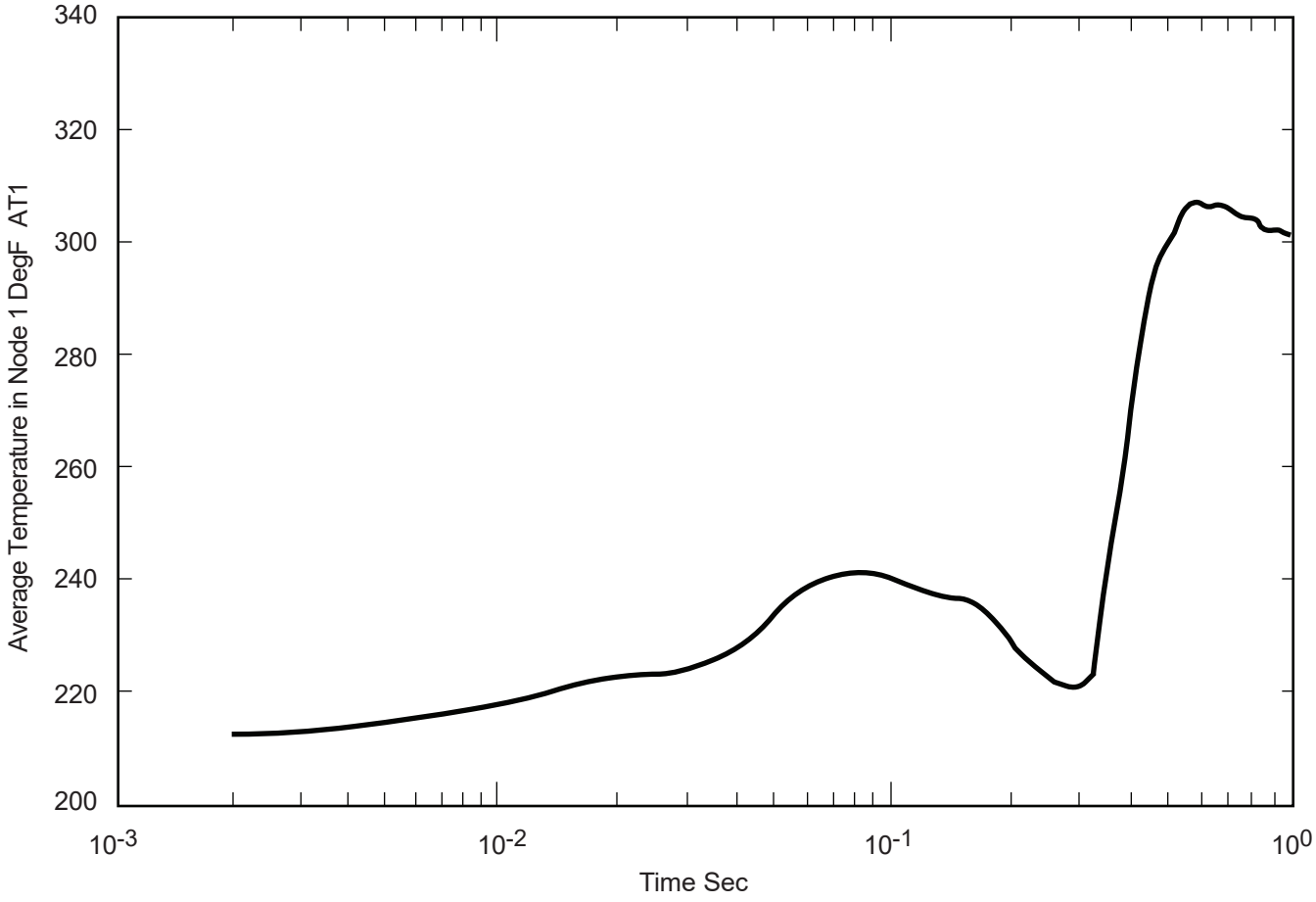

Columbia Generating Station Final Safety Analysis Report	Temperature Transient in Node 1 of Main Steam Tunnel after a Postulated Main Steam Pipe Break in Node 1 of Main Steam Tunnel		
	Draw. No. 970187.89	Rev.	Figure 3.6-70

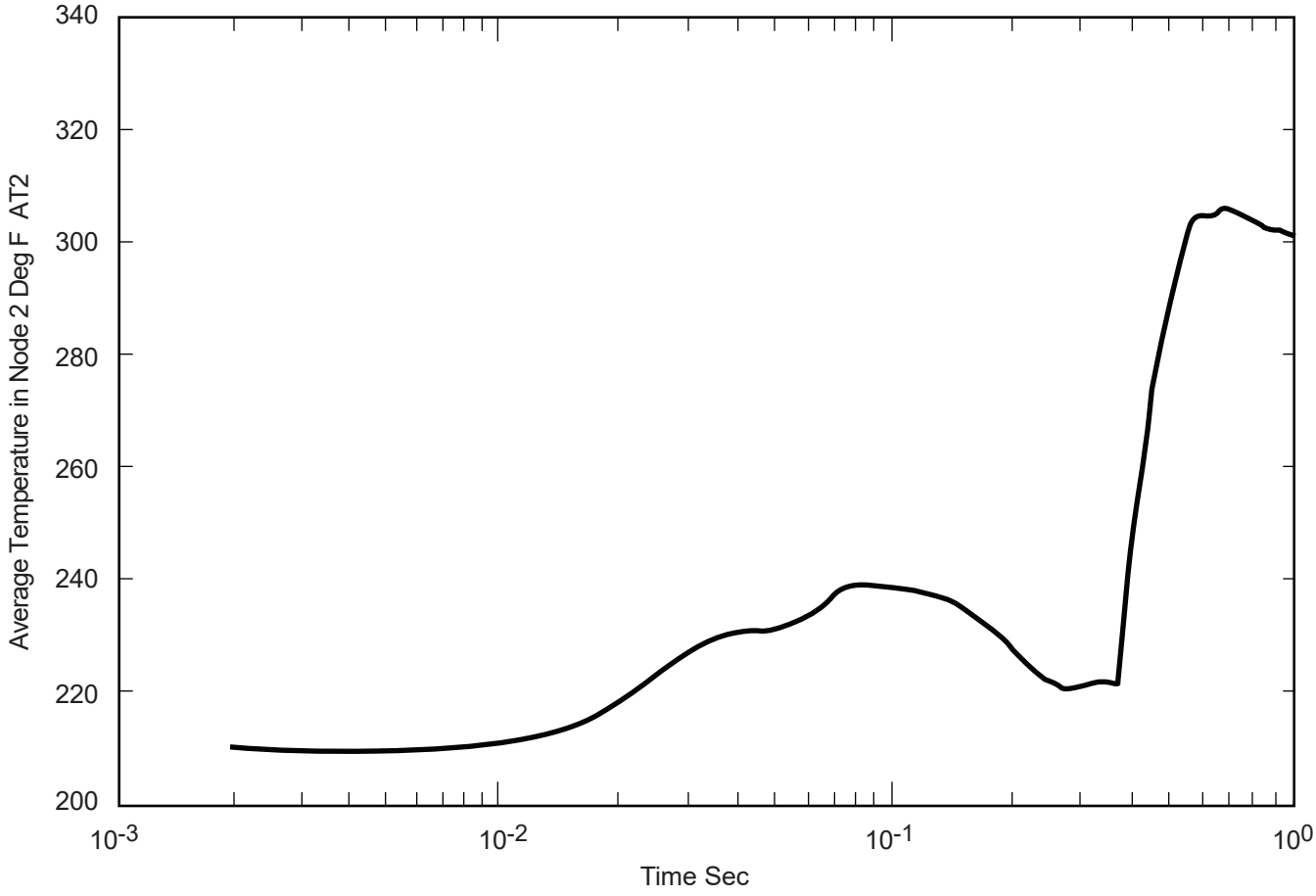

Columbia Generating Station Final Safety Analysis Report	Temperature Transient in Node 2 of Main Steam Tunnel after a Postulated Main Steam Pipe Break in Node 1 of Main Steam Tunnel		
	Draw. No. 970187.90	Rev.	Figure 3.6-71

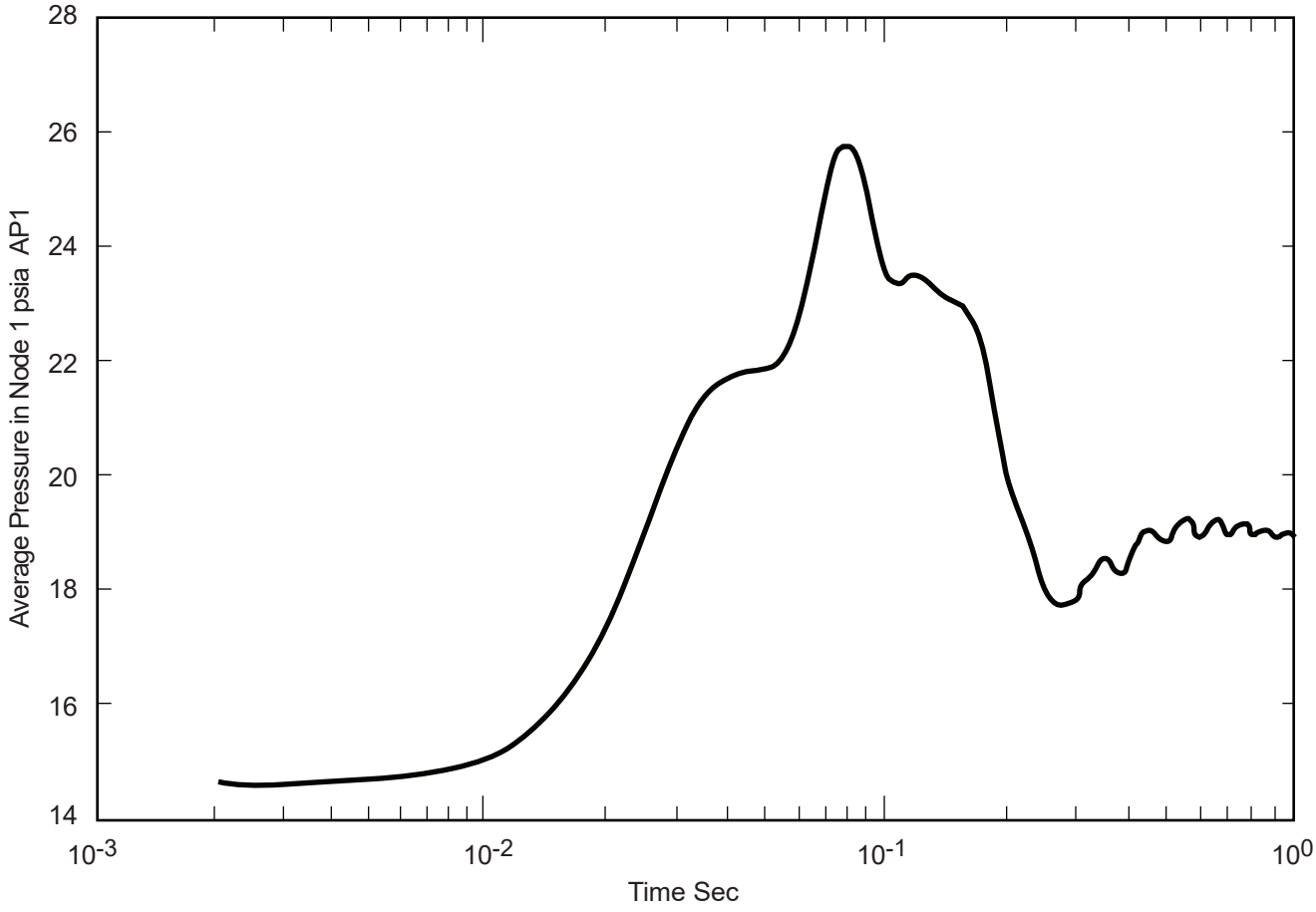

Columbia Generating Station Final Safety Analysis Report	Pressure Transient in Node 1 of Main Steam Tunnel after a Postulated Main Steam Pipe Break in Node 2 of Main Steam Tunnel		
	Draw. No. 970187.91	Rev.	Figure 3.6-72

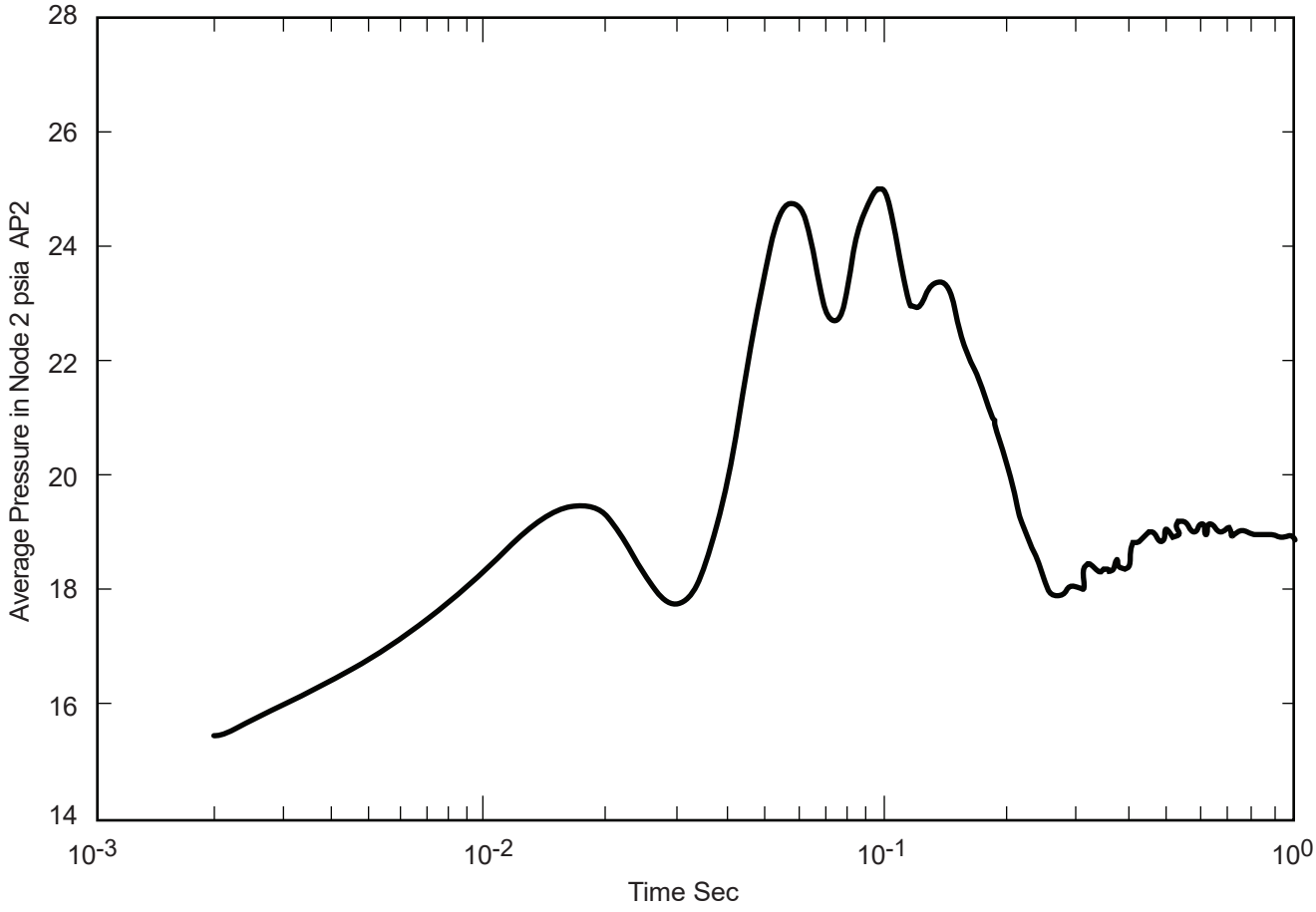

Columbia Generating Station Final Safety Analysis Report	Pressure Transient in Node 2 of Main Steam Tunnel after a Postulated Main Steam Pipe Break in Node 2 of Main Steam Tunnel		
	Draw. No. 970187.92	Rev.	Figure 3.6-73

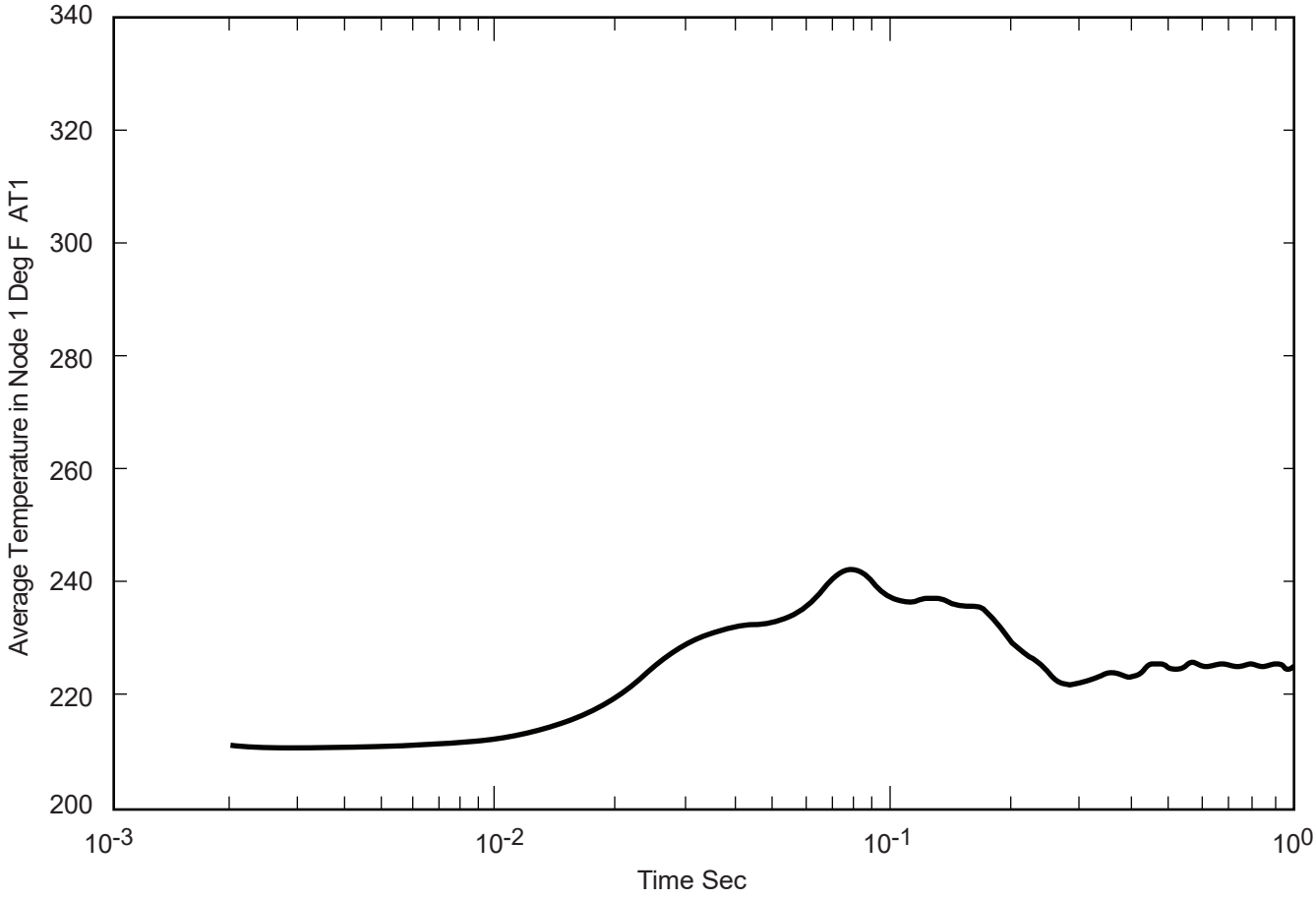

Columbia Generating Station Final Safety Analysis Report	Temperature Transient in Node 1 of Main Steam Tunnel after a Postulated Main Steam Pipe Break in Node 2 of Main Steam Tunnel		
	Draw. No. 970187.93	Rev.	Figure 3.6-74

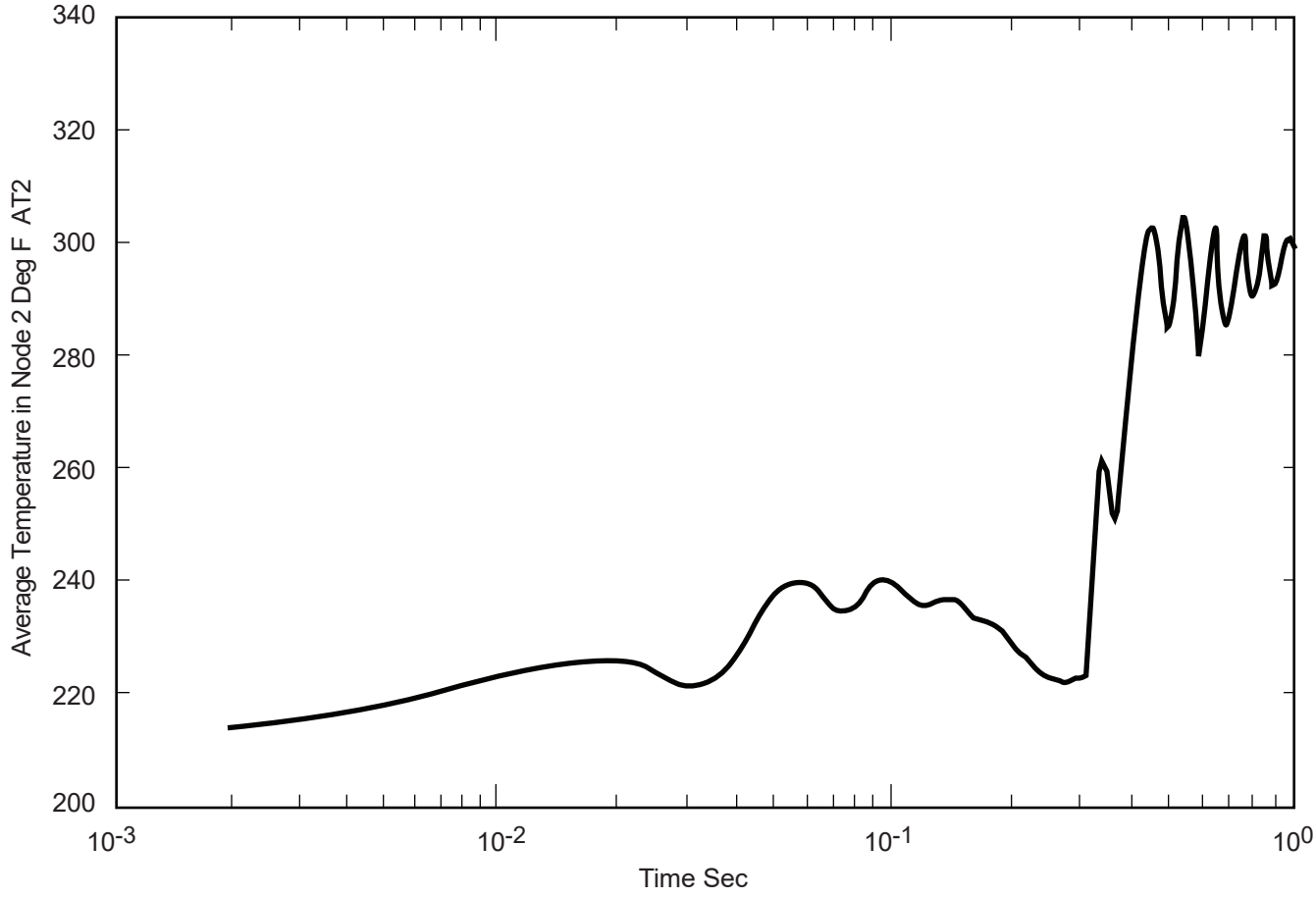

Columbia Generating Station Final Safety Analysis Report	Temperature Transient in Node 2 of Main Steam Tunnel after a Postulated Main Steam Pipe Break in Node 2 of Main Steam Tunnel		
	Draw. No. 970187.94	Rev.	Figure 3.6-75

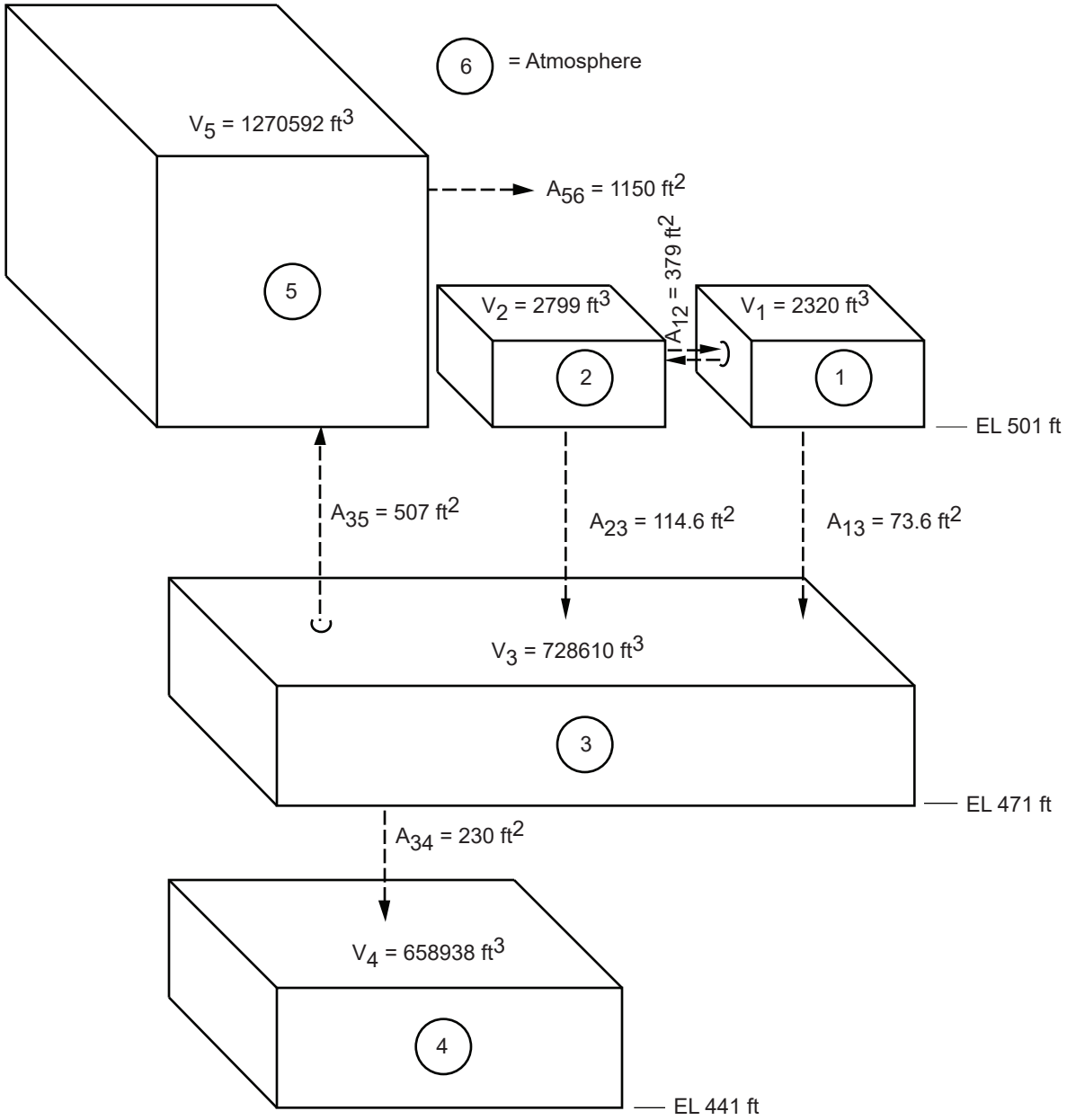

Note: Data Tabulated
in Tables 3.6-13 & -14

Columbia Generating Station Final Safety Analysis Report	Nodalization Scheme for Postulated Pipe Break in Main Steam Tunnel Extension		
	Draw. No. 990306.57	Rev.	Figure 3.6-76

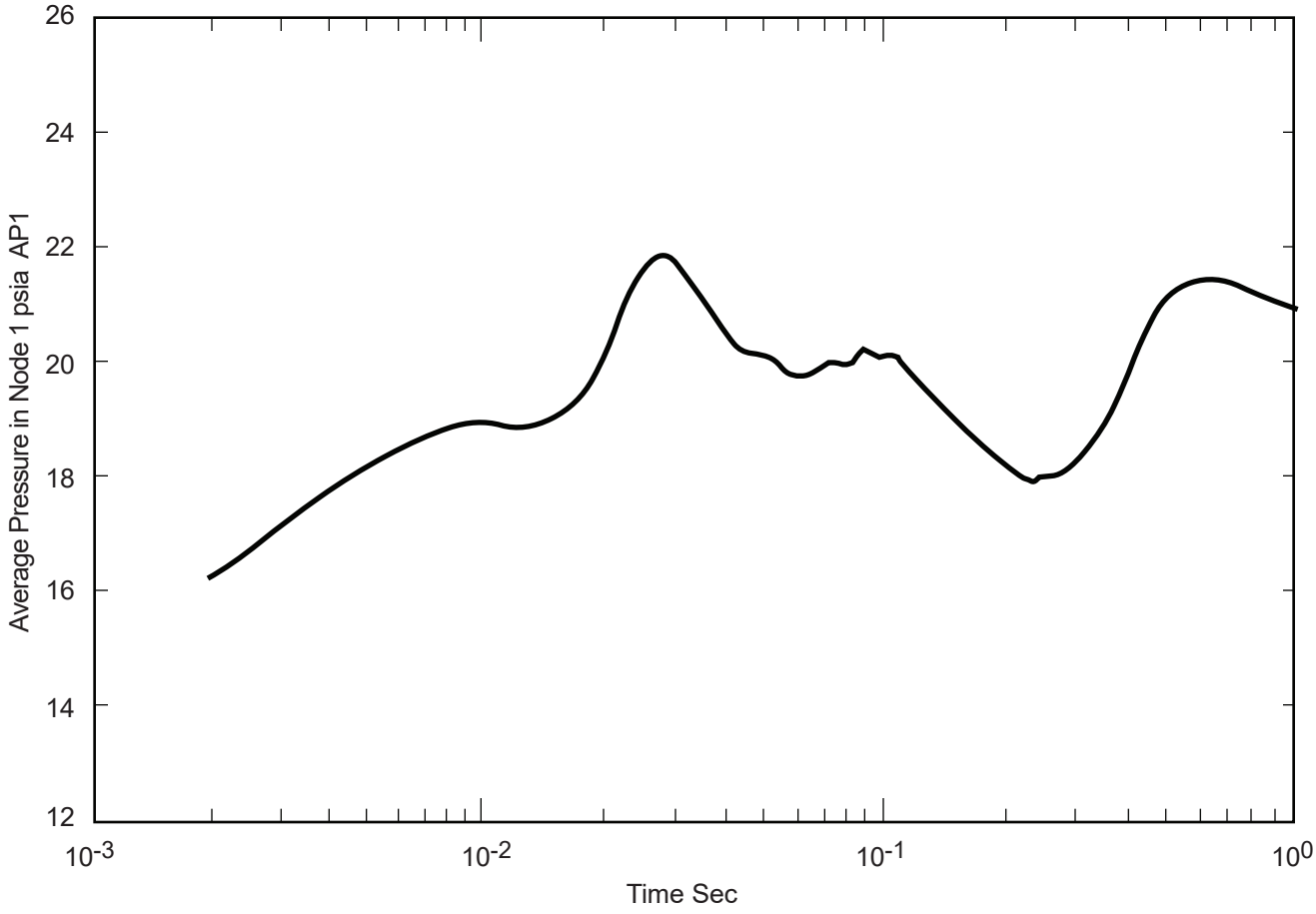

Columbia Generating Station Final Safety Analysis Report	Pressure Transient in Node 1 of Main Steam Tunnel Extension after a Postulated Main Steam Pipe Break in Node 1 of Main Steam Tunnel Extension		
	Draw. No. 970187.95	Rev.	Figure 3.6-77

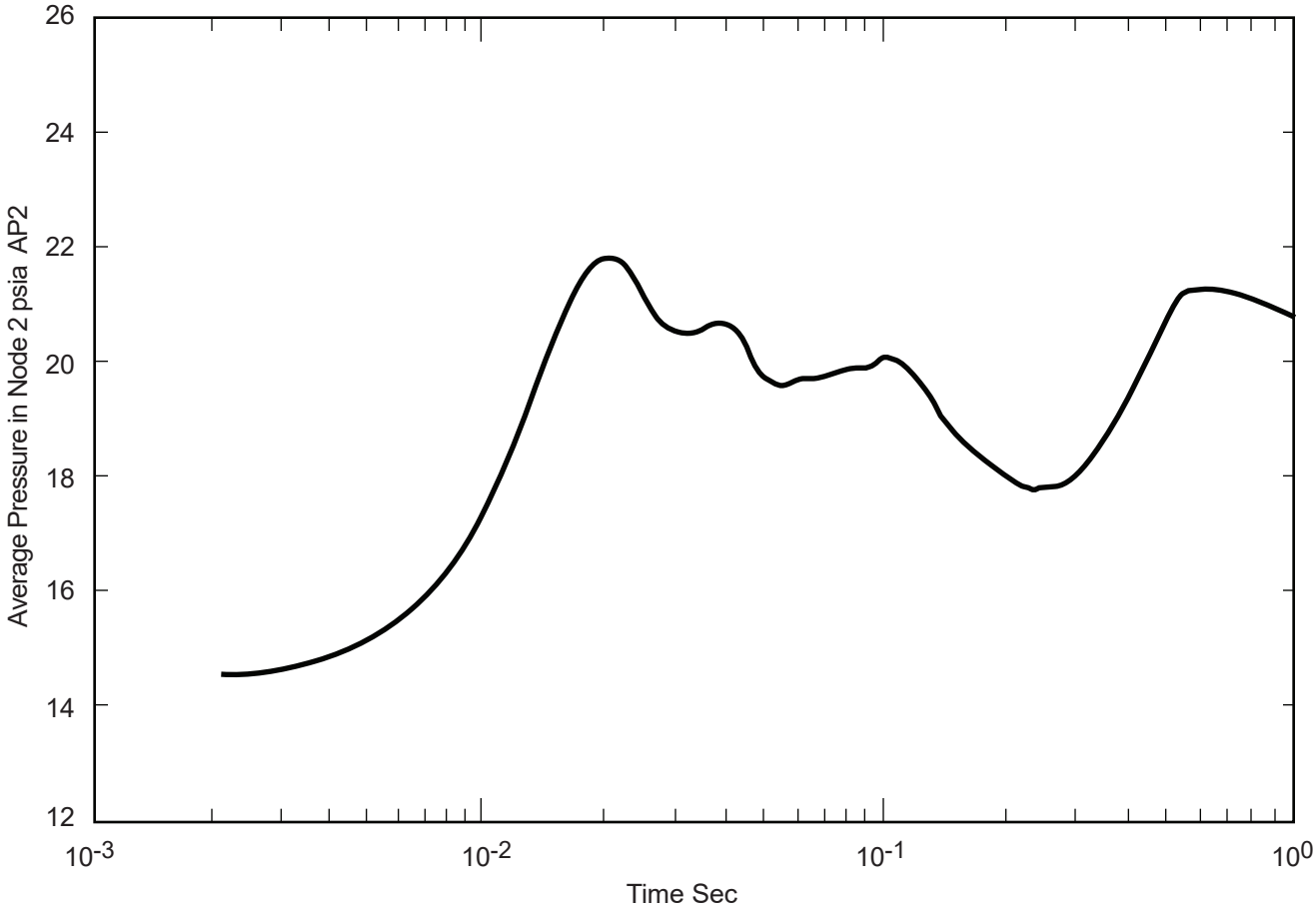

Columbia Generating Station Final Safety Analysis Report	Pressure Transient in Node 2 of Main Steam Tunnel Extension after a Postulated Main Steam Pipe Break in Node 1 of Main Steam Tunnel Extension		
	Draw. No. 970187.96	Rev.	Figure 3.6-78

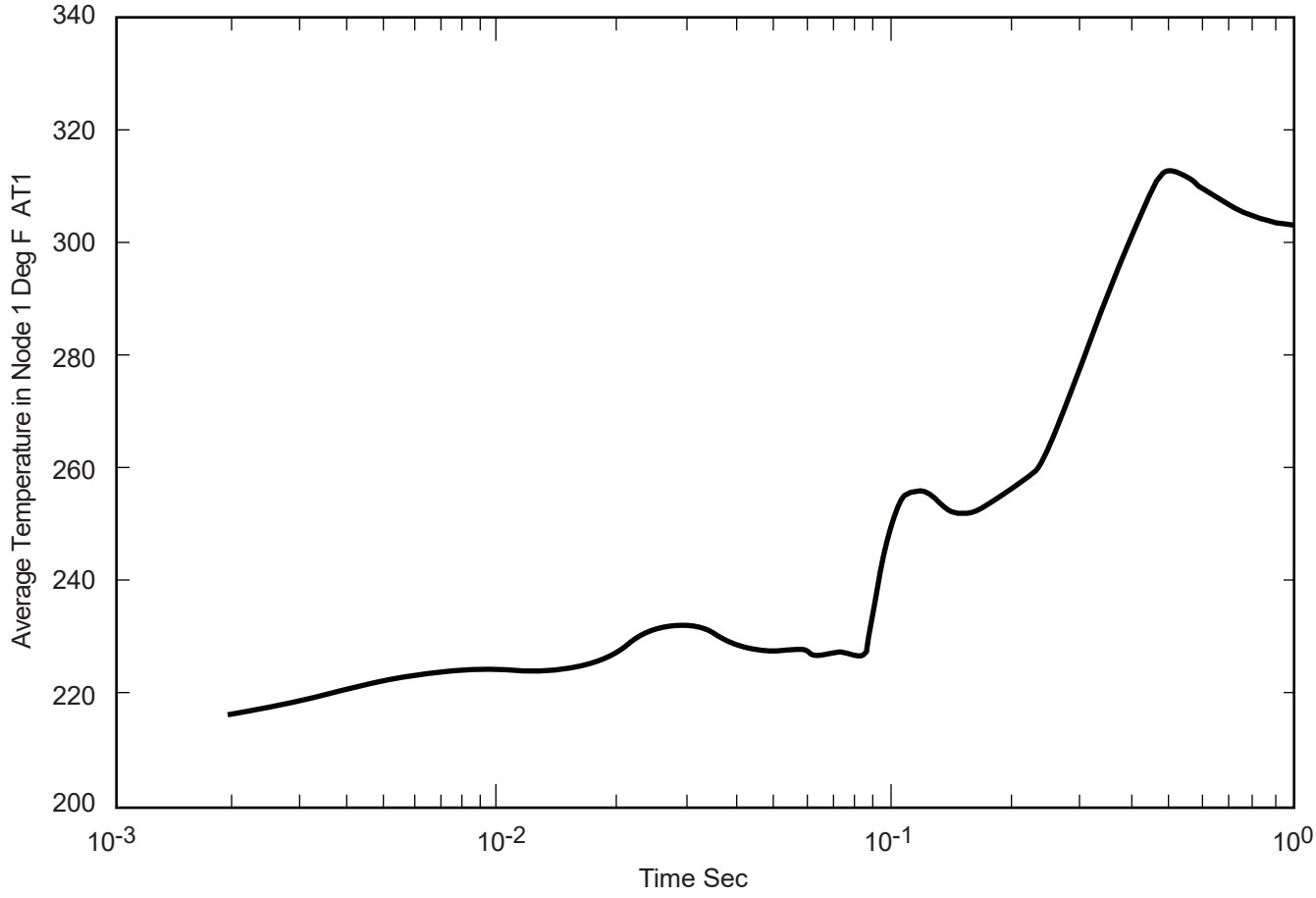

Columbia Generating Station Final Safety Analysis Report	Temperature Transient in Node 1 of Main Steam Tunnel Extension after a Postulated Main Steam Pipe Break in Node 1 of Main Steam Tunnel Exten.		
	Draw. No. 970187.97	Rev.	Figure 3.6-79

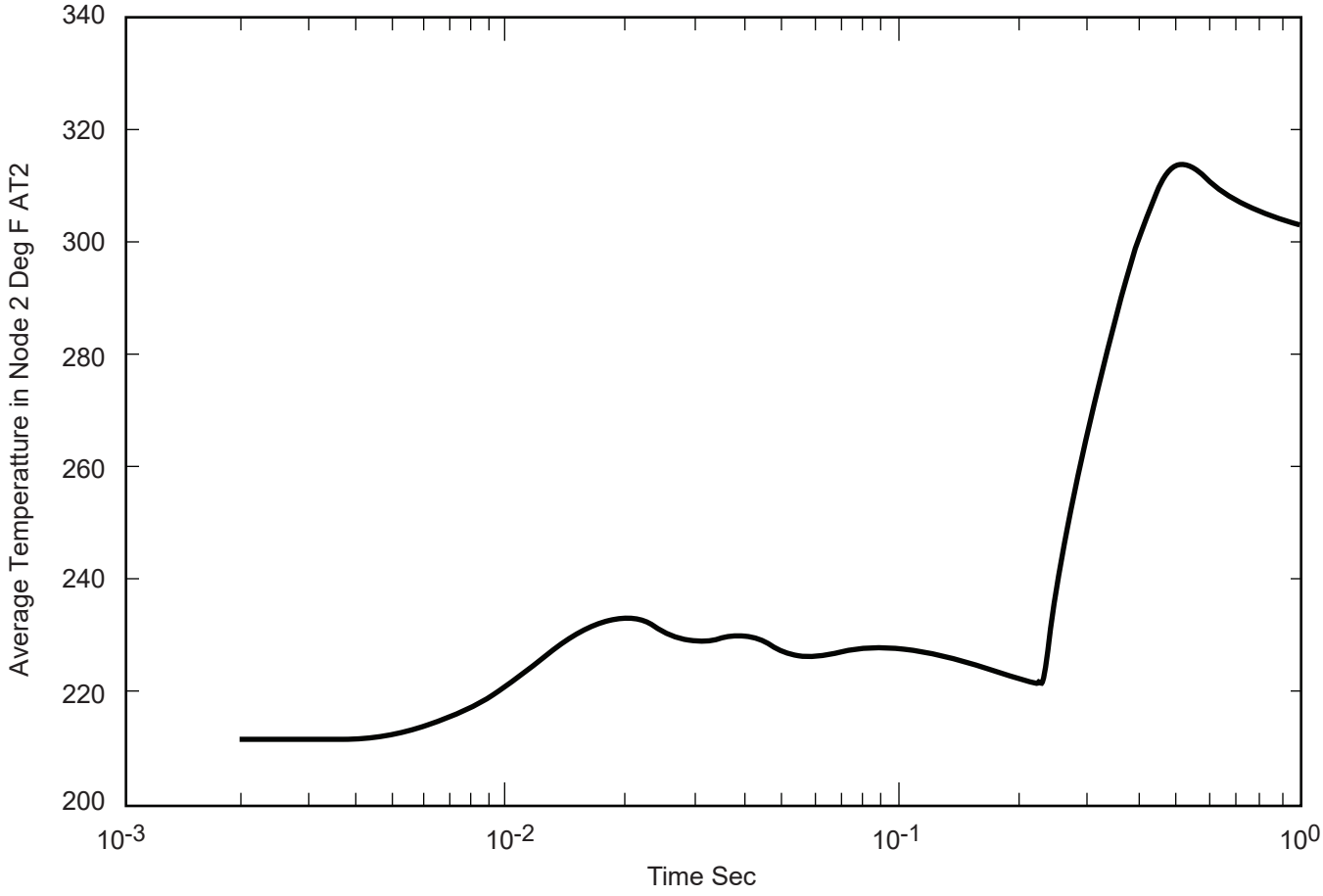

Columbia Generating Station Final Safety Analysis Report	**Temperature Transient in Node 2 of Main Steam Tunnel Extension after a Postulated Main Steam Pipe Break in Node 1 of Main Steam Tunnel Exten.**		
	Draw. No. **970187.98**	Rev.	Figure **3.6-80**

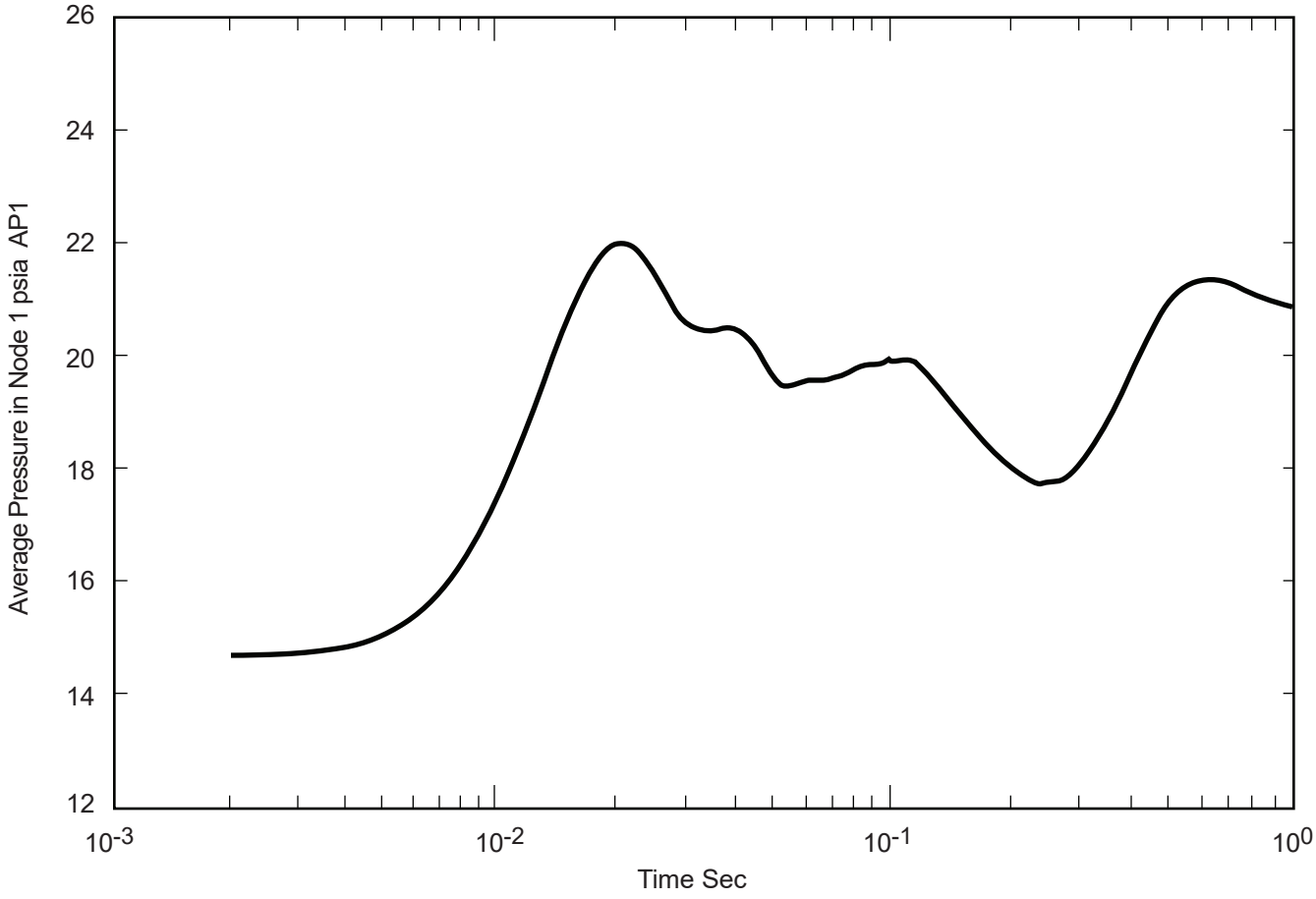

Columbia Generating Station Final Safety Analysis Report	Pressure Transient in Node 1 of Main Steam Tunnel Extension after a Postulated Main Steam Pipe Break in Node 2 of Main Steam Tunnel Exten.		
	Draw. No. 970187.99	Rev.	Figure 3.6-81

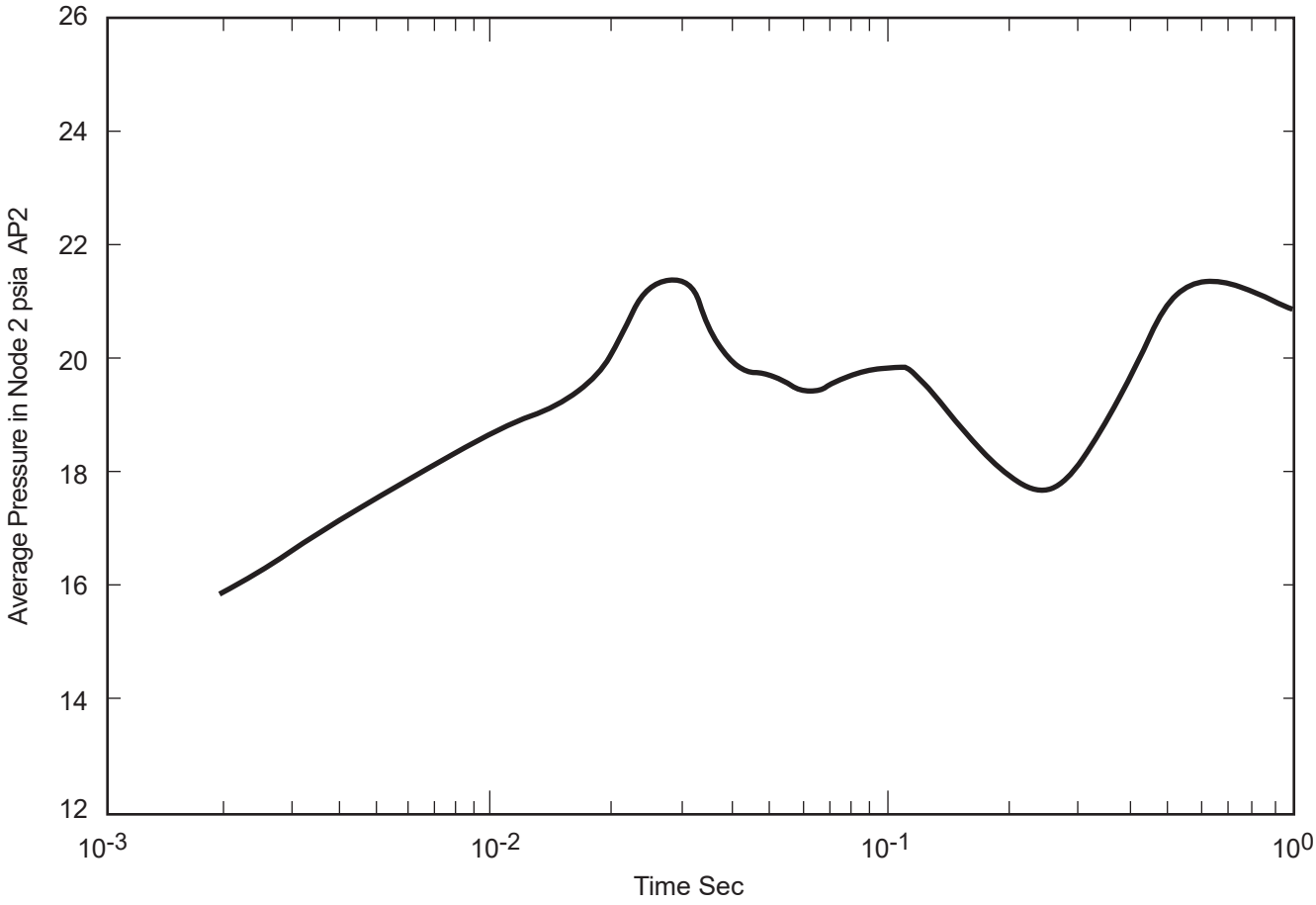

Columbia Generating Station Final Safety Analysis Report	Pressure Transient in Node 2 of Main Steam Tunnel Extension after a Postulated Main Steam Pipe Break in Node 2 of Main Steam Tunnel Extension		
	Draw. No. 900547.97	Rev.	Figure 3.6-82

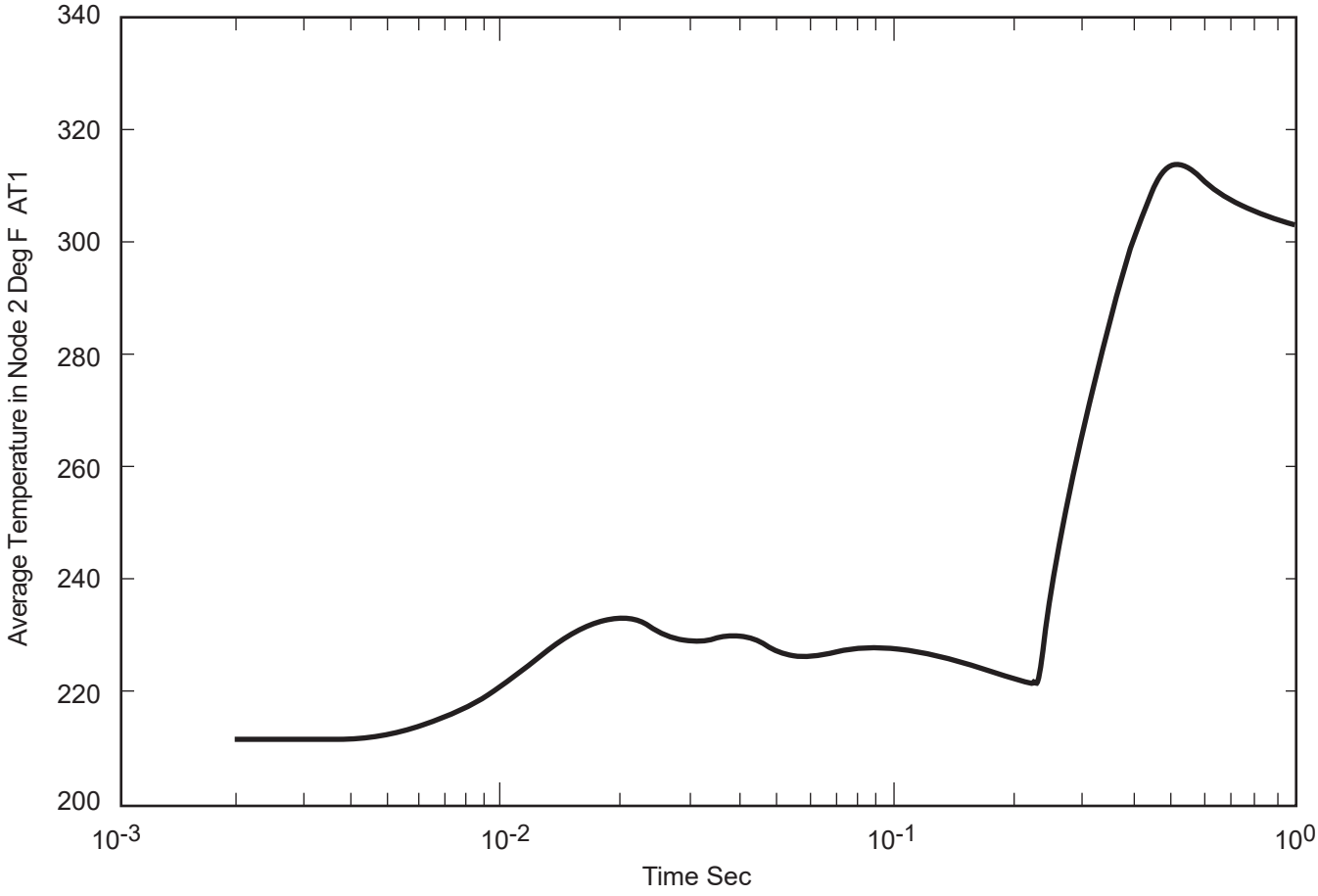

Columbia Generating Station Final Safety Analysis Report	Temperature Transient in Node 2 of Main Steam Tunnel Extension after a Postulated Main Steam Pipe Break in Node 2 of Main Steam Tunnel Exten.		
	Draw. No. 910402.25	Rev.	Figure 3.6-83

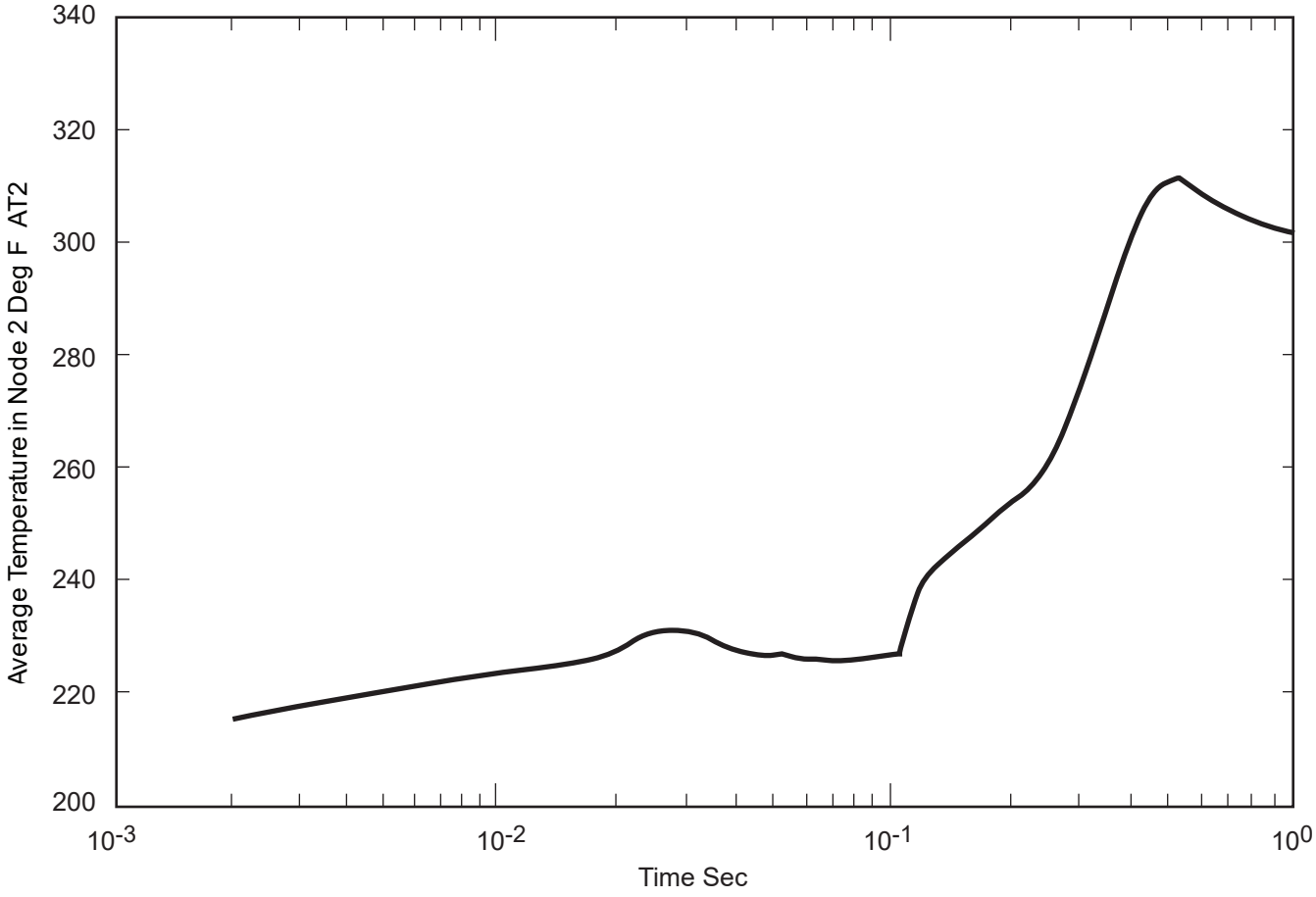

Columbia Generating Station Final Safety Analysis Report	Temperature Transient in Node 2 of Main Steam Tunnel Extension after a Postulated Main Steam Pipe Break in Node 2 of Main Steam Tunnel Extension		
	Draw. No. 900547.99	Rev.	Figure 3.6-84

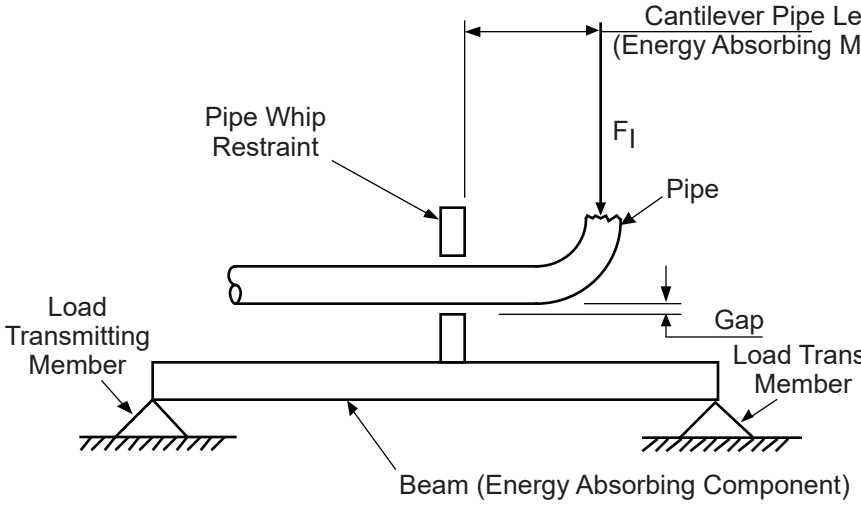

(A) Pipe Whip Support Configuration

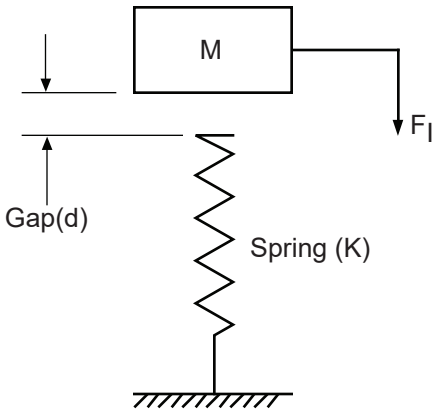

(B) Single Degree of Freedom Mathematical Idealization for a Structure

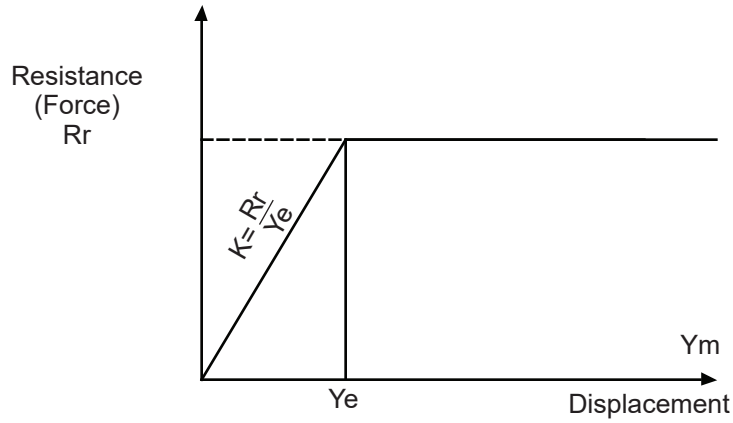

(C) Resistance Function

Columbia Generating Station Final Safety Analysis Report	**Analytical Model**		
	Draw. No. **970187.84**	Rev.	Figure **3.6-89**

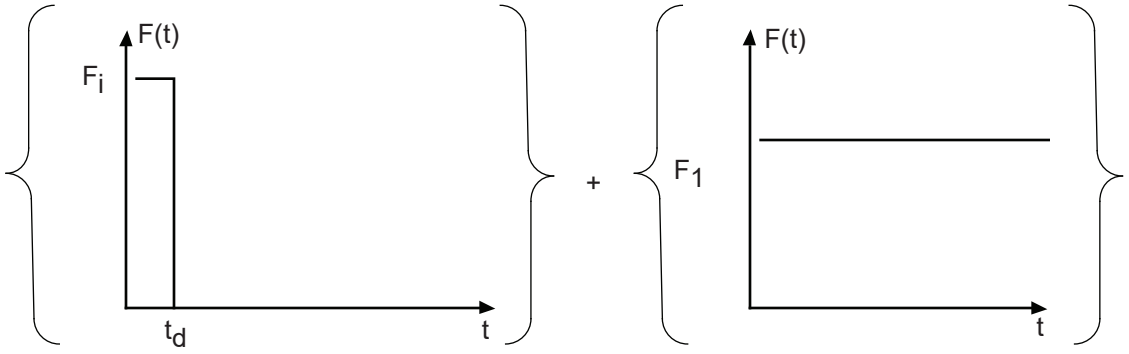

Impulse (i) = F_i (t_d)

Kinetic Energy (K) = $\frac{i^2}{2M}$ = F_1 x distance (d)

Note: $\mu + \frac{Y_m}{Y_e}$; Elastic Spring Constant k = $\frac{R_r}{Y_e}$

Ref. 3.6-1 Chapter 5 paragraph 5.5b

$F_1 Y_m + K = R_r [Y_m - (1/2) Y_e]$

Substituting $\mu = \frac{Y_m}{Y_e}$ & $\frac{R_r}{k} + Y_e$

$R_r^2 (\mu - 1/2) - uF_1 R_r - (K) (k) = 0$

Solving Quadratically:

$$R_r = \left[\frac{\mu F_1}{(2\mu-1)} \right] + \left[\left\{ \frac{u F_1}{(2\mu-1)} \right\}^2 + \frac{2 (K) (k)}{(2\mu-1)} \right]^{1/2}$$

Columbia Generating Station Final Safety Analysis Report	**Required Resistance of Structures (R_r)**		
	Draw. No. 970187.85	Rev.	Figure 3.6-90

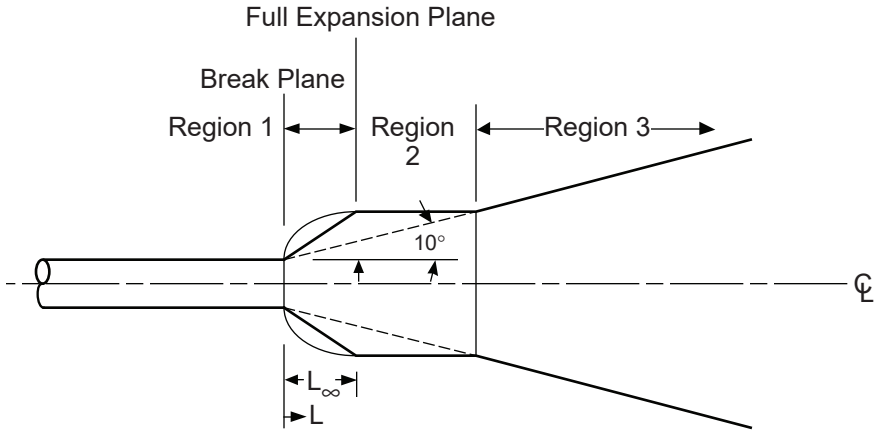

(A) Circumferential Break with Full Separation

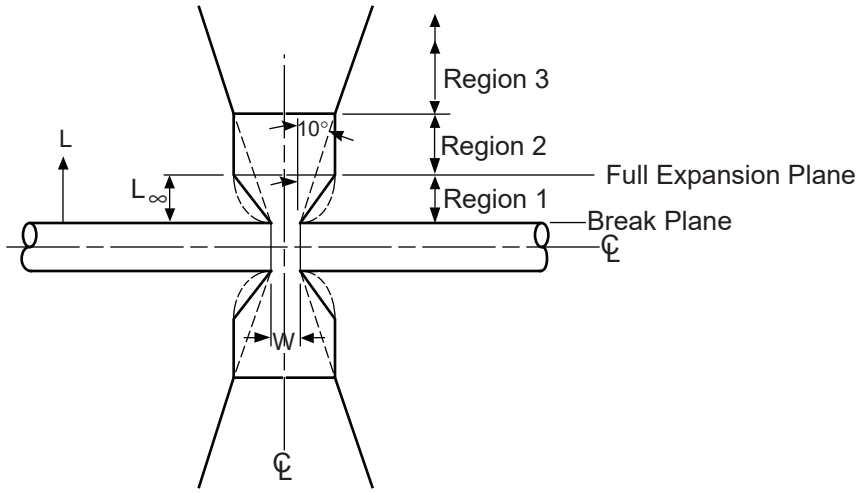

(B) Circumferential Break with Partial Separation

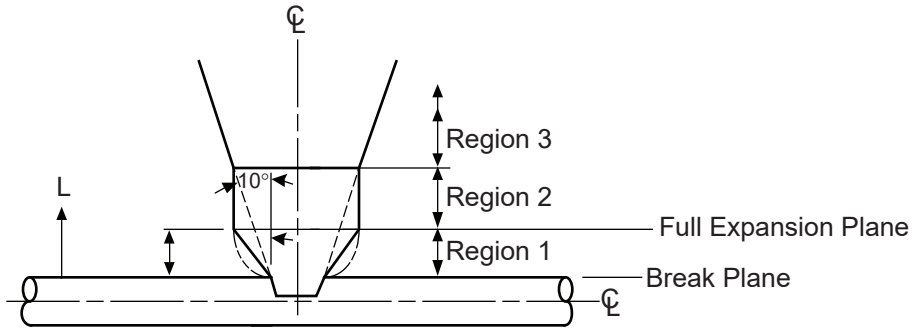

(C) Longitudinal Break

Columbia Generating Station **Final Safety Analysis Report**	**Fluid Jet Geometry**		
	Draw. No. **970187.86**	Rev.	Figure **3.6-91**

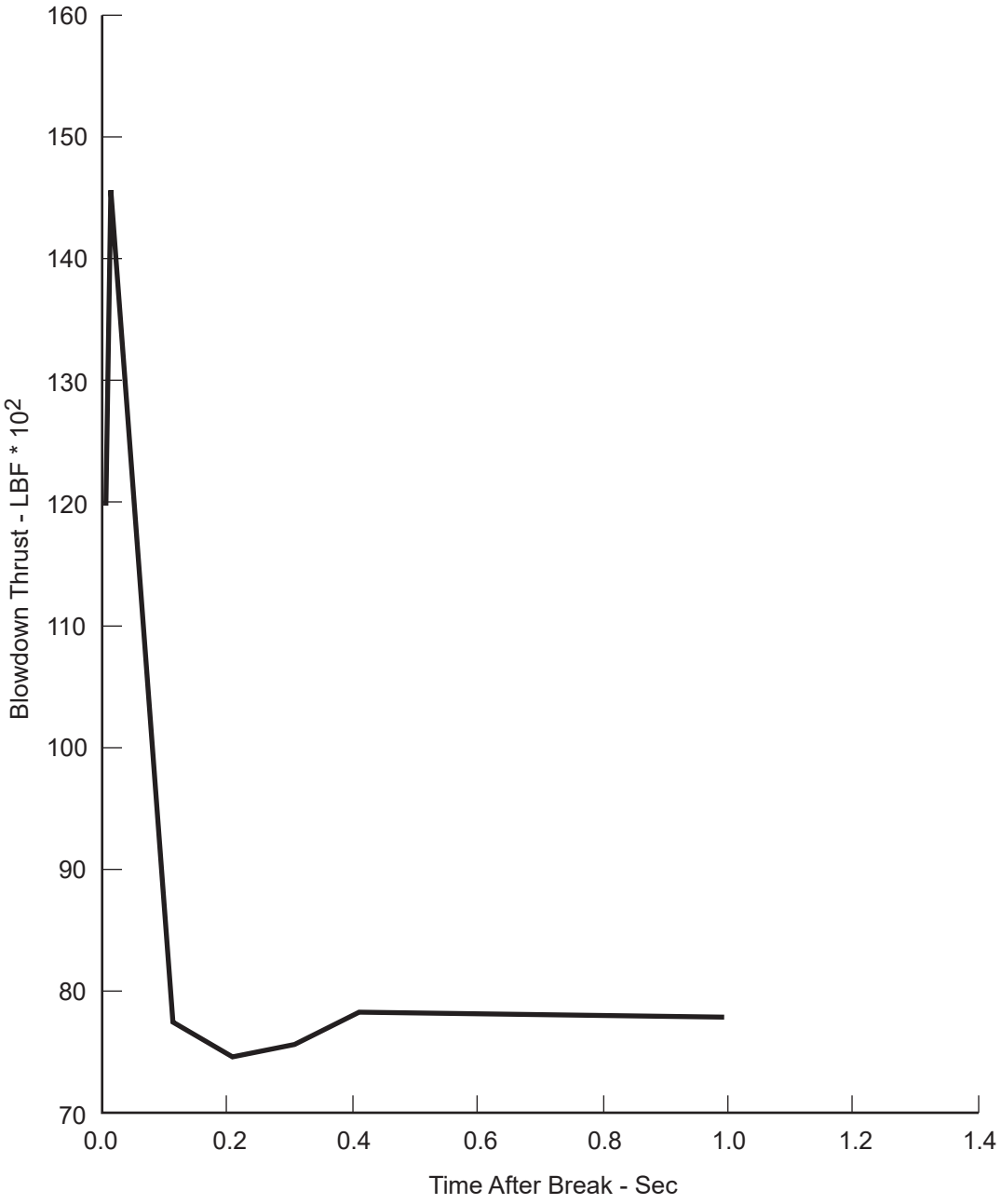

Columbia Generating Station Final Safety Analysis Report	Thrust Versus Time - Reactor Side of Break on 4 in. RCIC (13) - 4 in. Room R206		
	Draw. No. 910402.06	Rev.	Figure 3.6-96

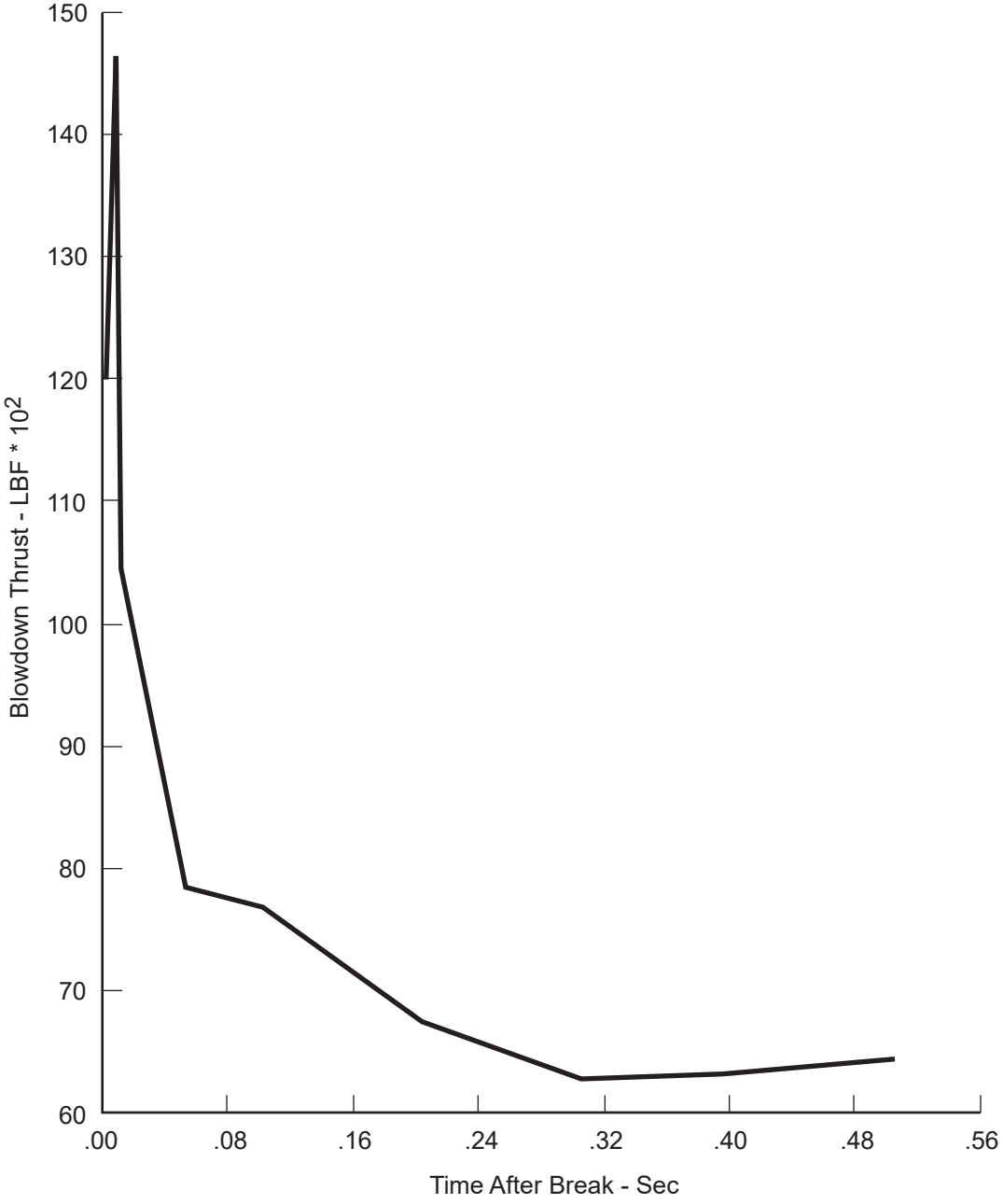

Columbia Generating Station Final Safety Analysis Report	Thrust Versus Time - Reactor Side of Break on 4 in. RCIC (13) - 4 - El. 431.8 ft		
	Draw. No. 910402.07	Rev.	Figure 3.6-97

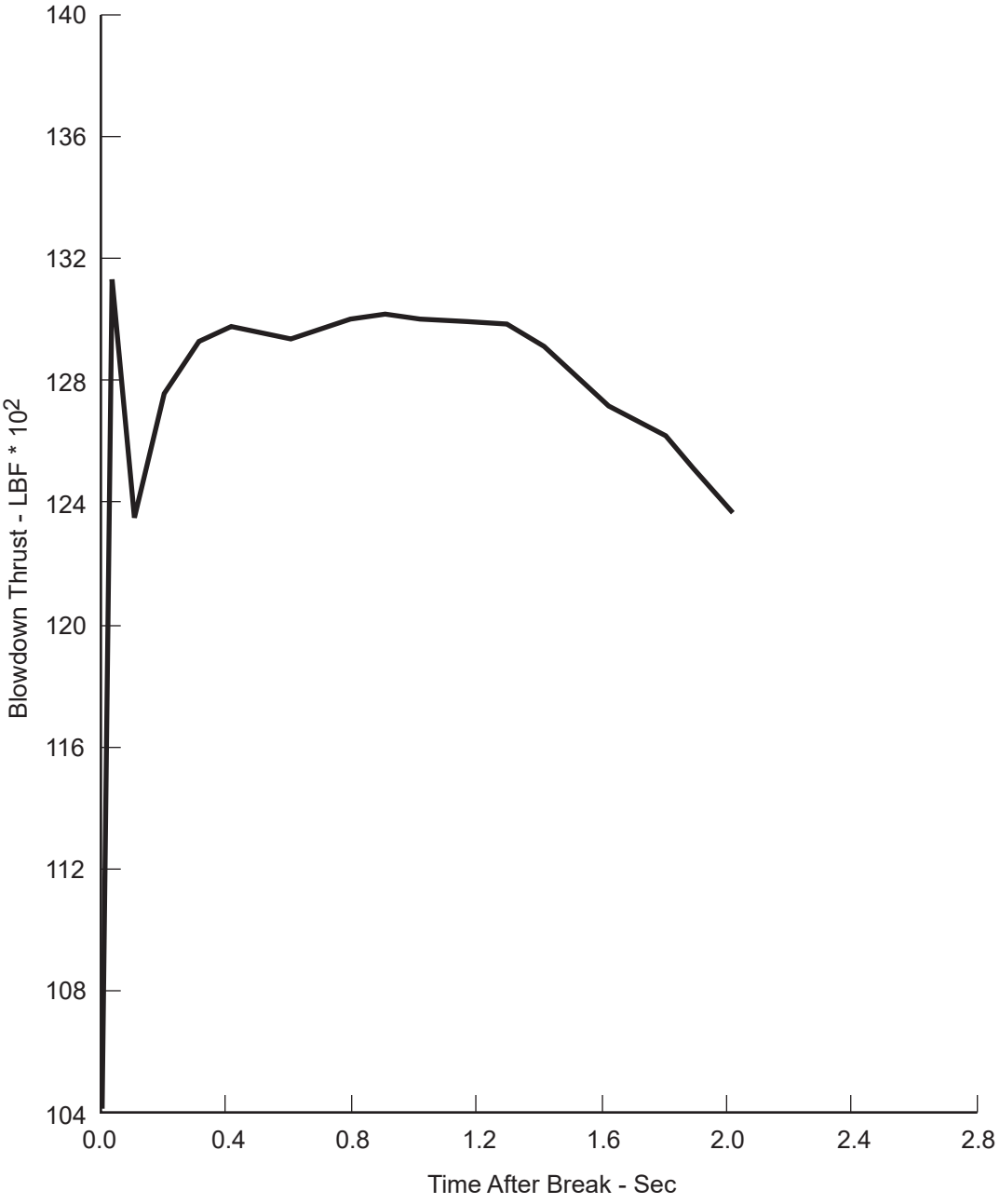

Columbia Generating Station Final Safety Analysis Report	**Thrust Versus Time - Upstream Side of Break on 4 in. RWCU (2) - 4 - El. 536 ft 0 in., Room R409**		
	Draw. No. 910402.08	Rev.	Figure 3.6-98

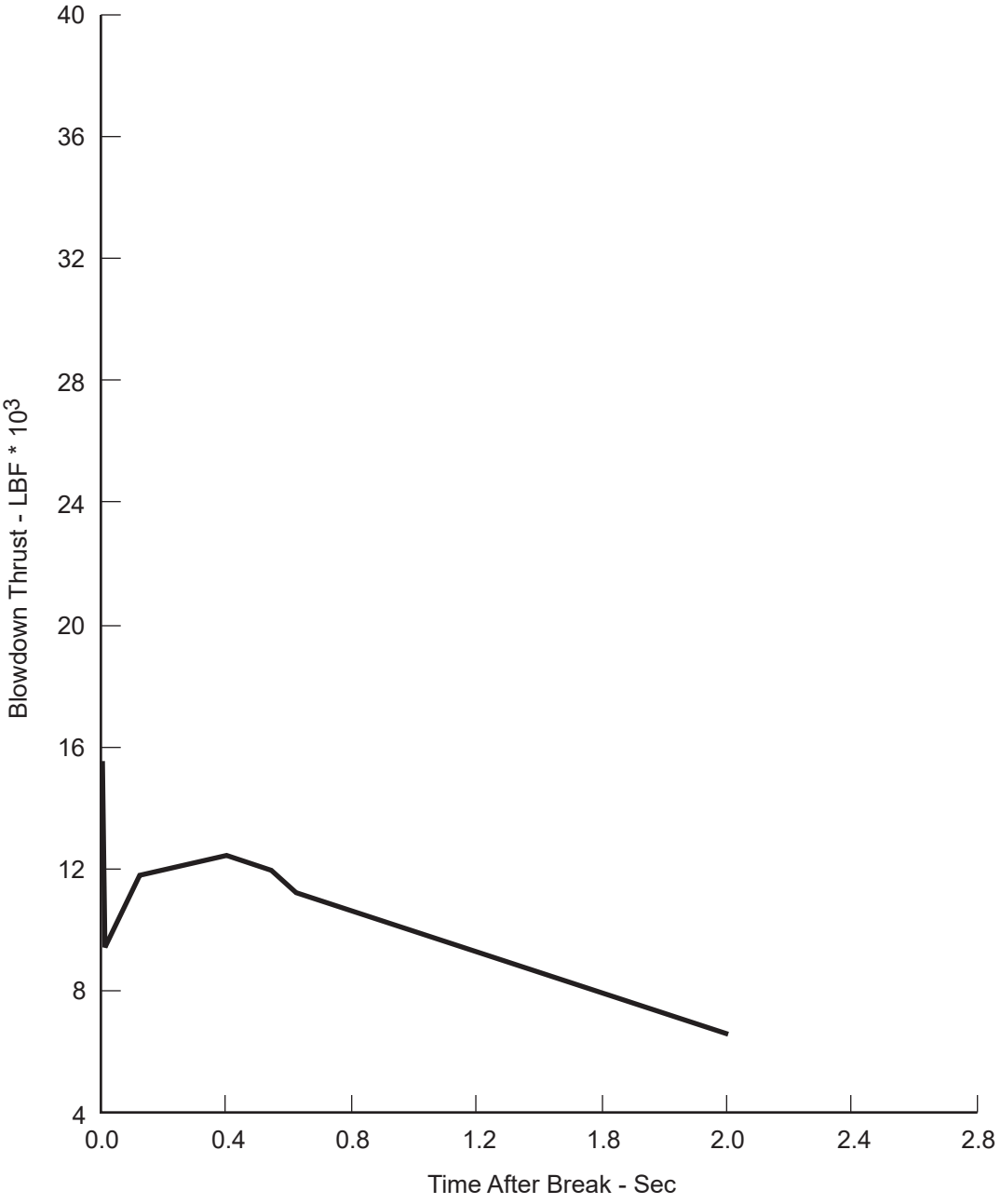

Columbia Generating Station Final Safety Analysis Report	**Thrust Versus Time - Heat Exchanger Side of Break on 6 in. RWCU (2) - 4 - El. 514 ft 0 in., Room R308**		
	Draw. No. 910402.05	Rev.	Figure 3.6-99

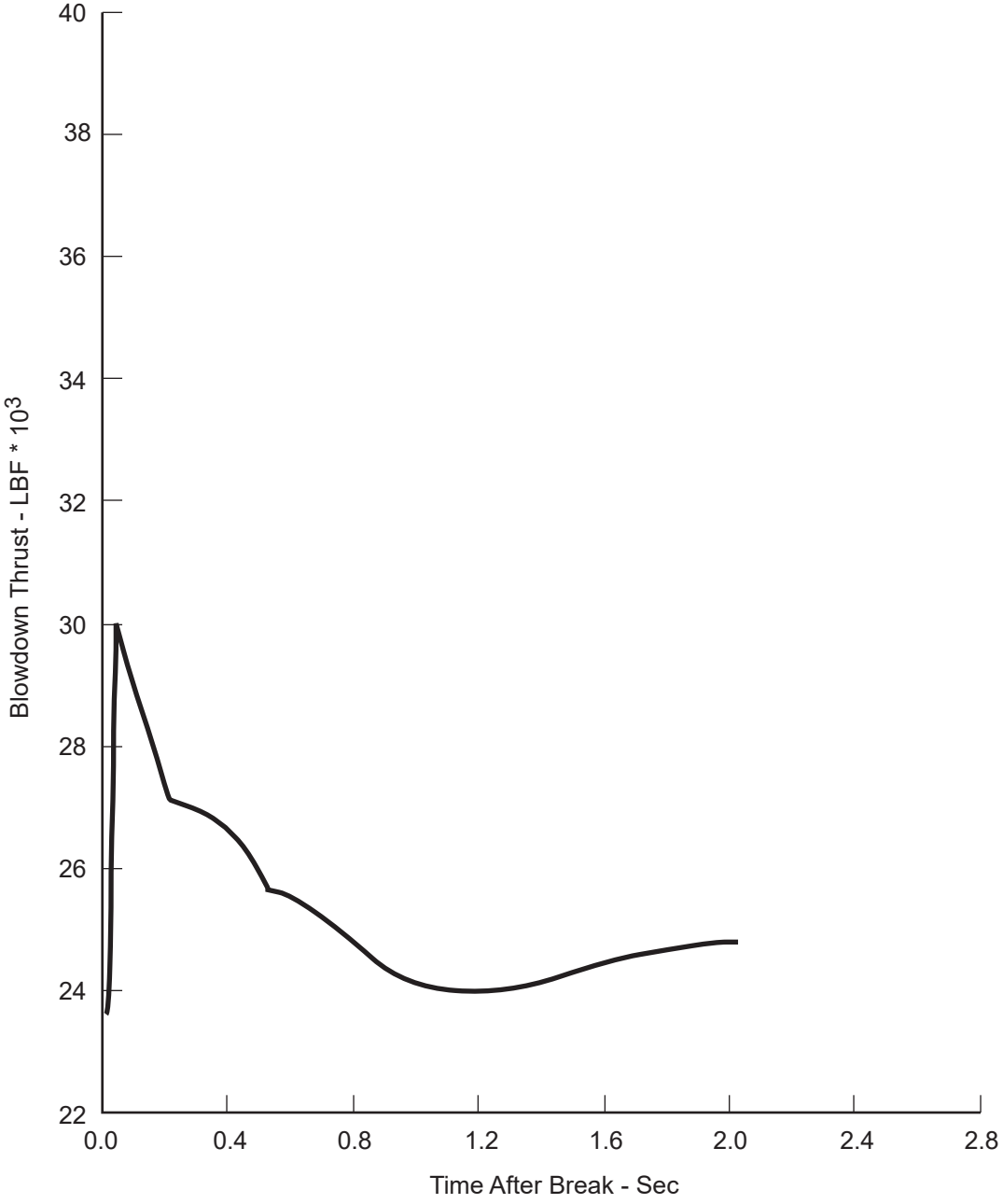

Columbia Generating Station Final Safety Analysis Report	**Thrust Versus Time - Pump Side of Break on 6 in. RWCU (1) - 4 - El. 548 ft 0 in., Room R409**		
	Draw. No. 910402.09	Rev.	Figure 3.6-100

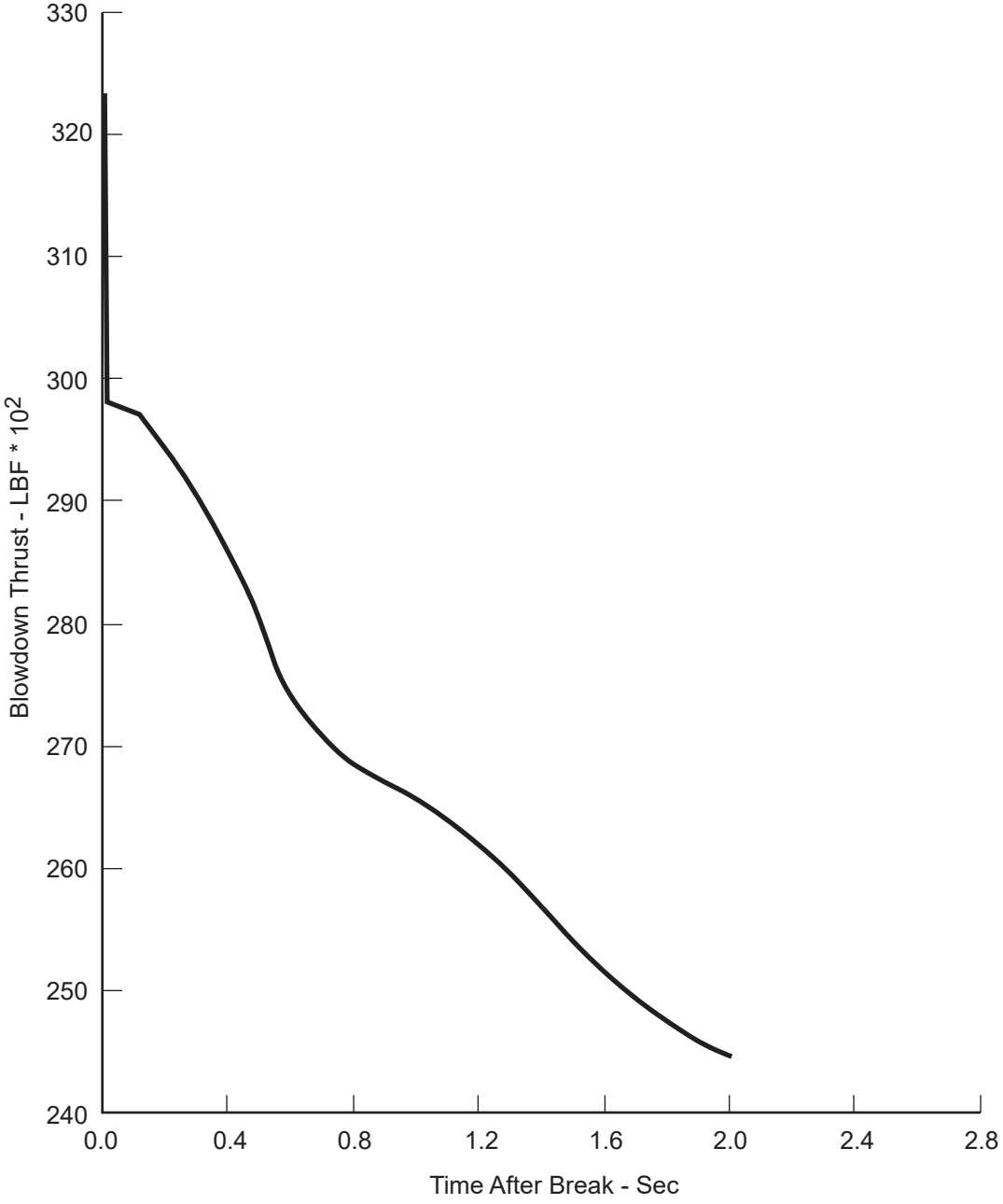

Columbia Generating Station Final Safety Analysis Report	**Thrust Versus Time - Pump Side of Break on 6 in. RWCU(1)-5SX/SXL - El. 557 ft 6 in., Room R510**		
	Draw. No. 910402.11	Rev.	Figure 3.6-101

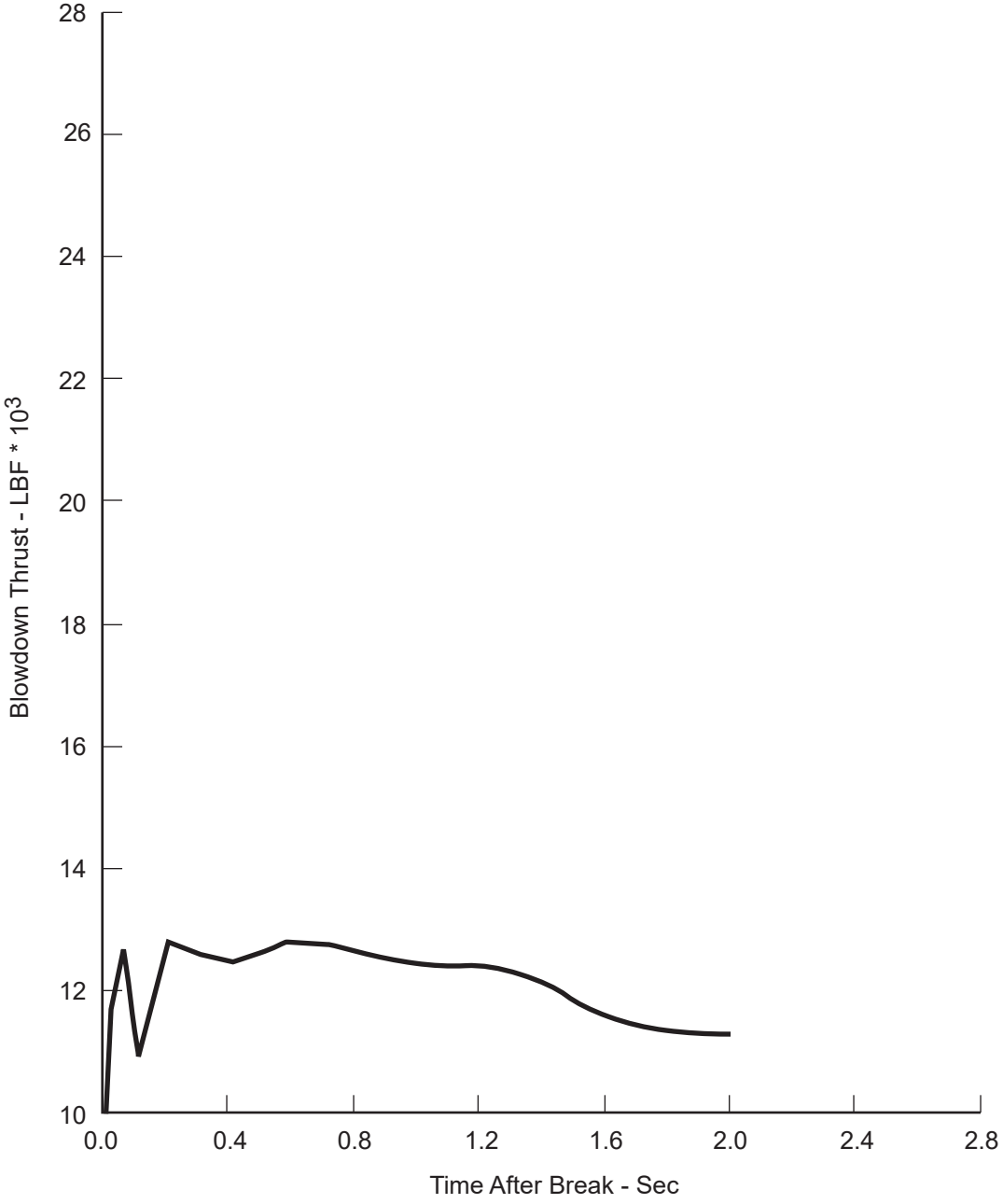

Columbia Generating Station Final Safety Analysis Report	Thrust Versus Time - Downstream Side of Break on 6 in. RWCU(2)-5SX/SXL - El.557 ft 6 in., Room R510		
	Draw. No. 910402.12	Rev.	Figure 3.6-102

DELETED

Columbia Generating Station Final Safety Analysis Report	**Thrust Versus Time - Both Sides of Break on 4 in. RWCU (1) - 4 El. 556.5 ft 0 in., Room R510**		
	Draw. No. **910402.13**	Rev.	Figure **3.6-103**

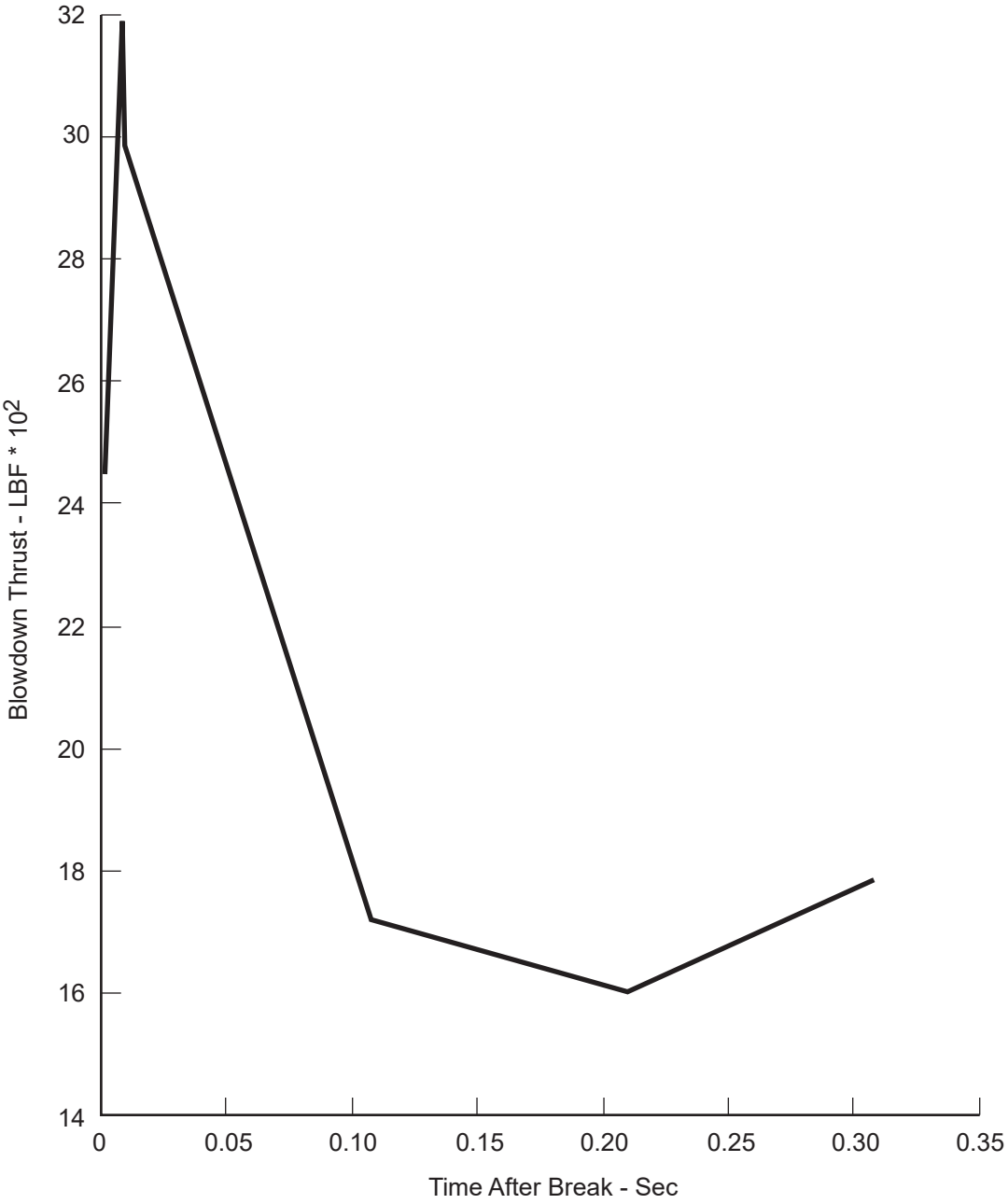

Columbia Generating Station Final Safety Analysis Report	**Thrust Versus Time - Upstream Side of Break on 4 in. AS (11) - 2 - El. 472 ft 0 in., Room R206**		
	Draw. No. 910402.14	Rev.	Figure 3.6-104

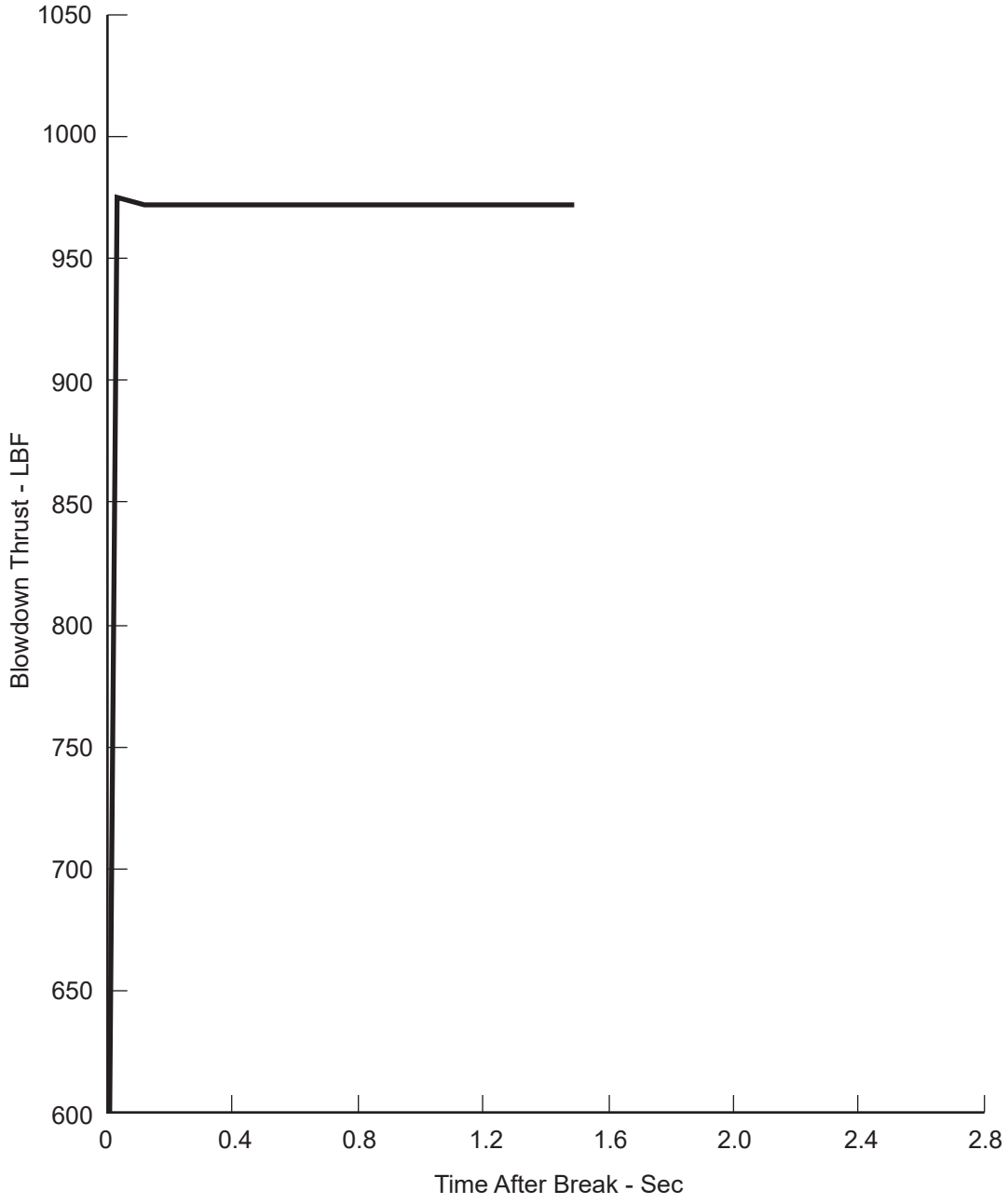

Columbia Generating Station Final Safety Analysis Report	Thrust Versus Time - Upstream Side of Break on 4 in. HS (1) - 2 - El. 574.5 ft 0 in., Room R604		
	Draw. No. 910402.15	Rev.	Figure 3.6-105

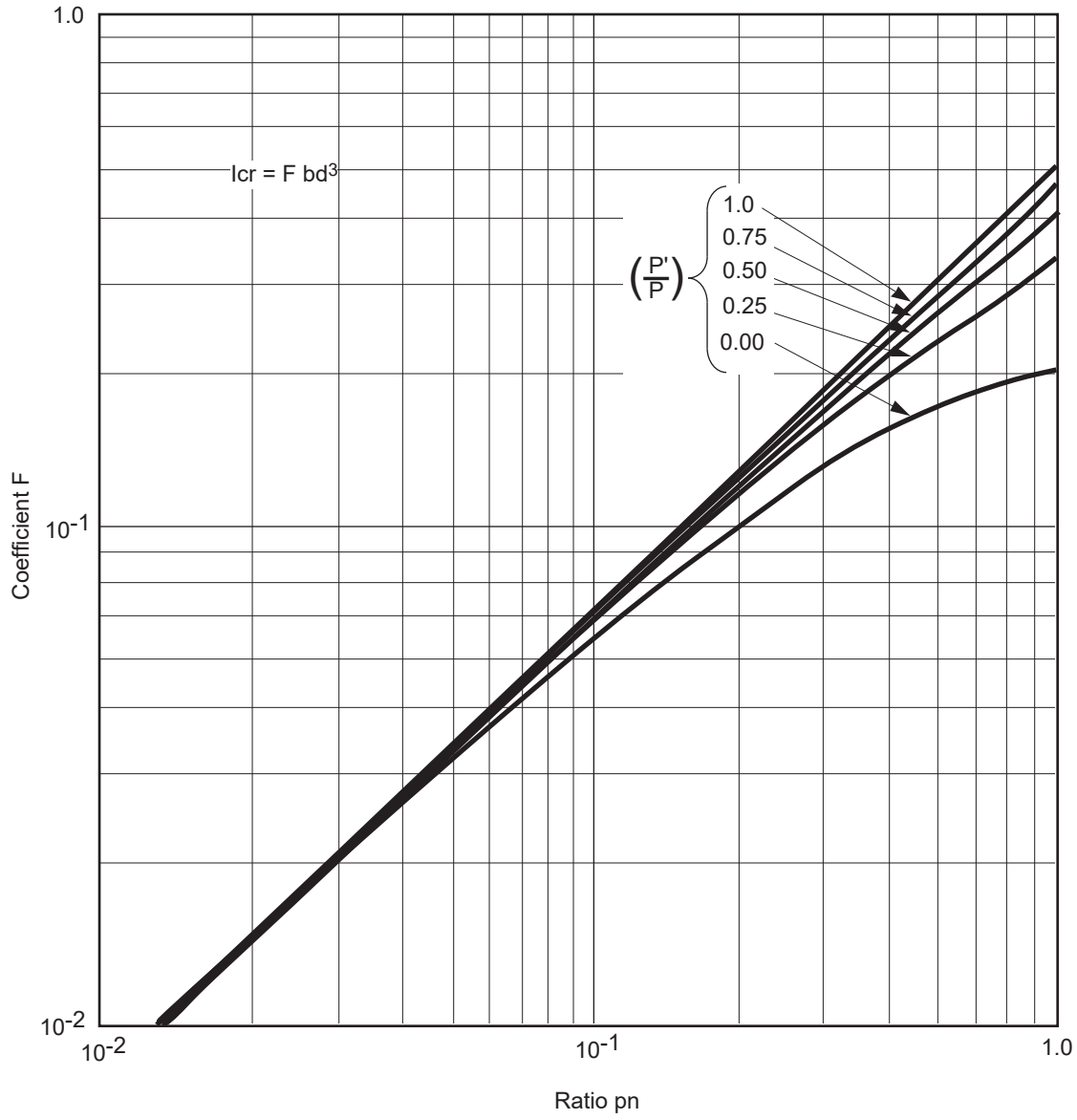

$$p = \frac{As}{bd}\ ,\ p' = \frac{A's}{bd}\ ,\ n = \frac{Es}{Ec}$$

$$F = \frac{K^3}{bd}\ ,\ + pn\,(l-k)^2\ + \left(\frac{2n-1}{n}\right)(pn)\frac{P'}{P}\left(K - \frac{d'}{d}\right)^2$$

$$\frac{2n-1}{n} \cong 1.9, \quad \frac{d'}{d} \cong 0.10, \quad k = -m + (m^2 + 2q)^{1/2}$$

$$m = pn\,(1 + 1.9\,\frac{p'}{p}), \quad q = pn\,(1 + 0.19\,\frac{p'}{p})$$

Columbia Generating Station Final Safety Analysis Report	**Coefficients for Moment of Inertia of Cracked Sections**		
	Draw. No. **990306.64**	Rev.	Figure **3.6-106**

3.7 SEISMIC DESIGN

All structures, systems, and components (SSCs) of the facility are defined as either Seismic Category I or non-Category I. The non-Category I seismic features are also referred to in other sections of this report as Seismic Category II. The requirements for Seismic Category I qualification are given in Section 3.2 along with a list of SSCs that are so categorized.

All SSCs related to plant safety are designed to withstand the effects of the safe shutdown earthquake (SSE) and the operating basis earthquake (OBE).

The SSE is that earthquake which is based on an evaluation of the maximum earthquake potential considering the regional and local geology and seismology and specific characteristics of local subsurface material. It is that earthquake which produces the maximum vibratory ground motion for which certain SSCs are designed to remain functional. These SSCs are those necessary to ensure

a. The integrity of the reactor coolant pressure boundary,

b. The capability to shut down the reactor and maintain it in a safe shutdown condition, or

c. The capability to prevent or mitigate the consequences of accidents which could result in potential offsite exposures comparable to the exposure limits of 10 CFR Part 50.67.

The OBE is that earthquake which, considering the regional and local geology and seismology and specific characteristics of local subsurface material, could reasonably be expected to affect the plant site during the operating life of the plant. It is that earthquake which produces the vibratory ground motion for which those features of the nuclear power plant necessary for continued operation without undue risk to the health and safety of the public are designed to remain functional. The OBE amplitude equals 50% the SSE amplitude.

Geological and seismic criteria related to the site are given in Section 2.5. Based on these criteria the characteristics and intensity of the postulated SSE are established.

3.7.1 SEISMIC INPUT

3.7.1.1 Design Response Spectra

The vibratory ground motion produced by the SSE is defined by design response spectra corresponding to the maximum vibratory accelerations at the elevations of the foundations of the nuclear power plant structures. The design response spectra are idealized, smooth curves relating the response of the foundations of the nuclear power plant structures to the vibratory

ground motion, considering such foundations to be single-degree-of-freedom damped oscillators and neglecting soil-structure interaction effects. The vibratory ground motion produced by the OBE is also defined by design response spectra.

Figures 3.7-1 and 3.7-2 show the design response spectra for the horizontal and vertical components, respectively, of ground motion associated with the SSE, for damping coefficients of 0.5, 2.0, 5.0, 7.0, and 10.0% of critical damping. The maximum horizontal ground acceleration for the SSE was selected to equal 0.25g, as described in Section 2.5, where g is acceleration of gravity. The peak ground acceleration in the vertical direction is taken as two-thirds of the horizontal value. The amplification values (and associated frequency ranges) in the design response spectra correspond to those of Newmark and Hall (Reference 3.7-1) with the exception that for 0.5, 2.0, and 5.0% of critical damping the amplification values were set at 4.8, 3.6, and 2.4, respectively. These response spectra correspond to design response spectra considered acceptable for soil sites (References 3.7-1 and 3.7-2).

These design response spectra are not identical to the design response spectra as defined in Regulatory Guide 1.60, Revision 1, scaled to 0.25g maximum horizontal ground acceleration. However, the latter are used with higher damping values as defined in Regulatory Guide 1.61, Revision 0. A response spectrum dynamic modal analysis was performed on the reactor building structure for an SSE input earthquake using (a) the design response spectra defined in Figure 3.7-1 and the damping values of Table 3.7-1, and (b) the design response spectra, scaled to 0.25g maximum horizontal ground acceleration, and damping values defined in Regulatory Guides 1.60, Revision 1, and 1.61, Revision 0, respectively. The structural responses of each of these modal analyses were within 10% of each other at almost all locations.

Figures 3.7-3 and 3.7-4 show the design response spectra for the horizontal and vertical components, respectively, of ground motion associated with the OBE, for damping coefficients of 0.5, 2.0, 5.0, 7.0, and 10.0% of critical damping. The ordinates of these spectra represent one-half of the ordinates of the design response spectra associated with the SSE.

Both earthquakes are of 15 sec duration. This is justified because (a) most records show a short period (10 to 20 sec) of high intensity acceleration, (b) the structural response analysis indicates that the low intensity build-up and phase-out periods preceding and following the high intensity acceleration period have no significant effect on structural response, and (c) the 15 sec duration is long enough to incorporate at least 7.5 cycles of motion at frequencies above 0.5 cps which is considered a representative limit for flexible structures.

3.7.1.2 Design Time History

A synthetic record of strong motion earthquake acceleration which reproduces the frequency content displayed in Figures 3.7-1 through 3.7-4 was developed (see Figure 3.7-5) by using a mathematical model described by Shinozuka (Reference 3.7-3). It consists of a duration T

(T was set at 15 sec) of a stationary Gaussian process with zero mean and a specified auto-correlation function which corresponds to the mean-square spectral density function.

The italicized information is historical and was provided to support the application for an operating license.

$$S_g(\omega) = \frac{S}{\left(\omega^2 - \omega_g^2\right)^2 + 4\zeta_g^2\omega^2\omega_g^2} \qquad \textit{(Eq.3.7.1.2-1)}$$

where ω_g, ζ_g and S are positive parameters which will be determined such as to conservatively represent the frequency content of the ground acceleration displayed in Figures 3.7-1 through 3.7-4. This mathematical model with zero mean and the mean-square spectral density function defined by equation (3.7.1.2-1) was simulated by way of the following series:

$$\ddot{x}_g(t) = s\left(\frac{2}{N}\right)^{1/2} \sum_{k=1}^{N} \cos\left(w_k t + f_k\right) \qquad \textit{(Eq. 3.7.1.2-2)}$$

where, $\ddot{x}_g(t)$ is the mathematical model of earthquake acceleration (a Gaussian random process defined above), and

$$\sigma = \left[\int_{-\infty}^{+\infty} S_g(\omega).\ d\omega\right]^{1/2} \qquad \textit{(Eq. 3.7.1.2-3)}$$

is the standard deviation of the process $\ddot{x}_g(t)$; ω_k (=1,2,…,N) are independent random variables identically distributed with the density function $g(\omega) = g(\omega k)$ obtained by normalizing $S_g(\omega)$

$$g(\omega) = S_g(\omega) / \sigma^2 \qquad \textit{(Eq. 3.7.1.2-4)}$$

and ϕ_K are independent random variables identically distributed with the uniform density $1/2^{\pi}$ between 0 and 2^{π}.

The sample function, $\ddot{x}_g(t)$, which was chosen to represent the random process $x_g(t)$ was corrected and optimized locally.

The response spectra derived from the synthetic record of earthquake acceleration envelope the design response spectra at all damping values used in the design. The comparisons of the synthetic and design response spectra are shown in Figures 3.7-6 through 3.7-10 for the

horizontal component of the OBE. *The spectra were calculated at a set of discrete values for circular frequency (ω_o, $\omega_o r$, $\omega_o r^2$,…, $\omega_o r^{n-1}$) forming a geometric progression. To ensure that the error due to the harmonic component of the simulated earthquake acceleration which contributes most to the response spectrum value is limited to 10%, the ratio of the geometric progression, r, was taken equal to 1.0196 for the damping coefficient of 2.0% of critical damping. This ratio corresponds to a period interval varying from 0.003 sec at a period of 0.03 sec to 0.010 sec at a period of 0.50 sec. The same intervals were used in computing the response spectra at other damping values.*

3.7.1.3 Critical Damping Values

The specific percentage of critical damping values used in dynamic analysis for Category I SSCs are shown in Table 3.7-1 and are based on the recommendations of Reference 3.7-1. Damping values for foundation materials (soils) are also shown in Table 3.7-1.

3.7.1.4 Supporting Media for Seismic Category I Structures

Table 3.7-2 provides a description of the foundation/supporting media for Seismic Category I structures.

All of the buildings/structures shown in Table 3.7-2 have independent foundations. Bedrock was encountered at approximately 525 ft beneath the plant grade (+440 ft 6 in. msl). See Section 2.5 for soil layering characteristics, shear wave velocity, shear modulus, and soil density.

3.7.2 SEISMIC SYSTEM ANALYSIS

Analysis of Seismic Category I SSCs is accomplished by using either the response spectrum method or the time-history method. The results obtained by the response spectrum method of dynamic analysis were used in the design of Seismic Category I structures. Seismic Category I structures were also analyzed by the time-history method of dynamic analysis, using as input a synthetic record of strong motion earthquake acceleration as defined in Section 3.7.1. The results of this analysis are used to generate seismic response spectra for the design and analysis of Seismic Category I systems and components housed in these structures. Alternately, the time histories of structural response at points of attachments/supports of components are used as input in the analysis of systems and components. In the case of Seismic Category I systems and components, the equivalent static load method and dynamic tests are used when conditions allow or require them as described below.

Analysis of Seismic Category I SSCs considers the following stress-producing earthquake effects:

a. Inertia forces determined by a dynamic analysis, and

b. Effects due to differential support displacement, where applicable.

The allowable stress, load combinations, and deformation limits are those set forth in the appropriate codes and design standards which are summarized in Sections 3.8, 3.9, and 3.10.

3.7.2.1 Seismic Analysis Methods

3.7.2.1.1 Introduction

Modeling procedures allow the equations of motion of a system to be written as a finite set of simultaneous ordinary differential equations. There are two approaches to the solution of the equations of dynamic equilibrium: the mode-superposition method and the direct integration method. The former was used in the original seismic analysis. It generally consists of two steps, the solution of the characteristic value problem represented by the free vibration response of the system and the transformation to normal coordinates utilizing the mode shapes of the system. This procedure uncouples the equations of motion so that the response of the system in each individual mode may be evaluated independently. Thus, the problem becomes one of solving independent differential equations rather than a set of simultaneous differential equations and, since the system is linear, the principle of superposition holds, and the total response of the system is determined by summing the responses of the individual modes.

3.7.2.1.2 The Equations of Dynamic Equilibrium

The equations of motion of a multi-degree-of-freedom discrete mass damped system subjected to an arbitrary ground motion assuming velocity proportional damping, are expressed in matrix form as follows:

$$\underline{m}\,\ddot{\underline{v}}(t) + \underline{c}\,\dot{\underline{v}}(t) + \underline{k}\,\underline{v}(t) = -\underline{m}\,\underline{I_O}\ddot{v}_g(t) \qquad \textit{(Eq. 3.7.2.1-1)}$$

where

$\underline{m}$ = *Mass matrix*

$\underline{c}$ = *Damping matrix*

$\underline{k}$ = *Stiffness matrix*

$\underline{I_O}$ = *Unit vector*

$\ddot{v}_g(t)$ = *Ground acceleration*

$\underline{v}(t)$, $\dot{\underline{v}}(t)$, *and* $\ddot{\underline{v}}(t)$ = *Matrices of displacements, velocities. and accelerations, respectively.*

3.7.2.1.3 Solution of the Equations of Dynamic Equilibrium by Direct Integration

The direct integration method was not used.

3.7.2.1.4 Solution of the Equations of Dynamic Equilibrium by Mode-Superposition

The solutions to the dynamic equilibrium equations used *orthogonality relations and expressing the displacements, velocities, and accelerations in terms of generalized coordinates, (i.e.,* $\underline{v(t)} = \underline{\phi}\ \underline{\dot{Y}(t)}$, $\underline{\ddot{v}(t)} = \underline{\phi}\ \underline{\ddot{Y}(t)}$, $\underline{\dot{v}(t)} = \underline{\phi}\ \underline{\dot{Y}(t)}$, *) Equation 3.7.2.1-1 is rewritten as the following uncoupled, normal equations of motion:*

$$M_r \ddot{Y}_r(t) + 2d_r\omega_r \dot{Y}_r(t) + K_r Y_r(t) = \psi_r M_r \ddot{v}_g(t) \qquad \textit{(Eq. 3.7.2.1-2)}$$

where

$M_r = \underline{\phi}_r^T\ \underline{m}\ \underline{\phi}_r$ = *Generalized mass for the rth mode;*

$d_r = \dfrac{\underline{\phi}_r^T\ \underline{c}\ \underline{\phi}_r}{2\omega_r\ \underline{\phi}_r^T\ \underline{m}\ \underline{\phi}_r}$ = *Damping ratio of the rth mode (damping ratio for the rth mode is obtained using a weighted average as described in Section 3.7.1)*

$\psi_r = \dfrac{\underline{\phi}_r^T\ \underline{m}\ \underline{I}_\phi}{\underline{\phi}_r^T\ \underline{m}\ \underline{\phi}_r}$ = *Participation factor for the rth mode;*

ω_r = *undamped circular frequency of the rth mode;*

$\underline{Y(t)}$ = *time dependent normal coordinate vector;*

$\underline{\phi r}$ = *mode shape matrix for the rth mode;*

$\underline{\phi}_r^T$ = *transpose of* $\underline{\phi}_r$.

The undamped circular frequencies, ω, are calculated from

$$\left[\underline{k} - \omega^2 \underline{m}\right] = 0 \qquad \textit{(Eq. 3.7.2.1-3)}$$

and the mode shape matrix for the rth mode is obtained from

$$\left[\underline{k} - \omega_r^2 \underline{m}\right]\underline{\phi}_r = 0 \qquad \textit{(Eq. 3.7.2.1-4)}$$

The solution of the differential equation 3.7.2.1-2, for the case of at-rest initial conditions is

$$Y_r(t) = \frac{\psi_r}{\omega_r\sqrt{1-\lambda_r^2}\int_o^t \ddot{v}_g(\tau)e^{-\lambda r\omega r(t-\tau)} \sin\left[\omega_r\sqrt{1-\lambda_r^2}(t-\tau)\right]d\tau} \qquad \textit{(Eq. 3.7.2.1-5)}$$

For small damping ratios, λ_r, the above solution is approximated by:

$$Y_r(t) = \frac{\psi_r}{\omega_r}\int_o^t \ddot{v}_g(\tau)e^{-\lambda_r\omega_r(t-\tau)} \sin\left[\omega_r(t-\tau)\right]d\tau \qquad \textit{(Eq. 3.7.2.1-6)}$$

There are two methods of dynamic analysis that were used to solve the multi-degree-of-freedom problems: the response spectrum method and the time-history method.

3.7.2.1.5 Response Spectrum Method of Analysis

If the design earthquake is specified in terms of a response velocity spectrum, Equation 3.7.2.1-6 becomes

$$Y_r(t)\,max = \frac{\psi_r S_{vr}}{\omega_r} \qquad \textit{(Eq. 3.7.2.1-7)}$$

where: S_{vr} = Spectral velocity for the rth mode

$$S_{vr} = \left|\int_o^t \ddot{v}_g(\tau)e^{-\lambda_r\omega_r(t-\tau)} \sin\left[\omega_r(t-\tau)\right]d\tau\right| max \qquad \textit{(Eq. 3.7.2.1-8)}$$

The maximum modal displacements, $\underline{v}_{r\,max}$, for the rth mode is

$$\underline{v}_{r\,max} = \underline{\phi}_r \frac{\psi_r S_{vr}}{\omega_r} \qquad \textit{(Eq. 3.7.2.1-9)}$$

where S_{vr} *= spectral velocity for the rth mode.*

If the design earthquake is specified in terms of a response acceleration spectrum instead of a velocity spectrum, the maximum modal displacements, $\underline{v}_{r\,max}$, of the structure for the rth mode are

$$\underline{v}_{r\,max} = \underline{\phi}_r \frac{\psi_r S_{ar}}{\omega_r^2} \qquad \textit{(Eq. 3.7.2.1-10)}$$

where S_{ar} = *Spectral acceleration for the* r^{th} *mode.*

The maximum modal inertia forces, $\underline{F}_{r\,max}$, *for the* r^{th} *mode are computed from*

$$\underline{F}_{r\,max} = \underline{k}\ \underline{v}_{r\,max} \qquad \textit{(Eq. 3.7.2.1-11)}$$

When the maximum modal displacements and modal inertia forces are known, the other modal quantities such as shears and moments are computed for each mode by conventional structural analysis procedures.

3.7.2.1.5.1 Combination of Modal Response. In a response spectrum modal dynamic analysis, if the modes were not closely spaced (i.e., if the frequencies differ from each other by more than 10% of the lower frequency), the modal responses were combined by the square-root-of-the-sum-of-the-squares (SRSS) method as described in Section 3.7.2.1.5.1.1. If two or more frequencies differ from each other by less than 10%, their modal responses were first combined by the absolute sum method and then combined with other individual modal responses by the SRSS method. For some nuclear steam supply system (NSSS) equipment, a double sum method, as described in Section 3.7.2.1.5.1.2 was used to evaluate the combined response. In a time-history method of dynamic analysis, the vector sum at every step was used to calculate the combined response. The use of the time-history analysis method precluded the need to consider closely spaced modes.

3.7.2.1.5.1.1 Square Root-of-the-Sum-of-the-Squares Method. Mathematically, this SRSS method is expressed as follows:

$$R = \left[\sum_{i=1}^{n} (R_i)^2 \right]^{1/2} \qquad \textit{(Eq. 3.7.2.1-12)}$$

where:

R = *Combined response*

R_i = *Response in the* i^{th} *mode*

n = *Number of modes considered in the analysis.*

3.7.2.1.5.1.2 Double Sum Method. This method is defined mathematically as

$$R = \left[\sum_{k=1}^{N} \sum_{s=1}^{N} \left| R_k \; R_s \right| \varepsilon_{ks} \right]^{1/2} \qquad \textit{(Eq. 3.7.2.1-13)}$$

where

R = *Representative maximum value of a particular response of a given element to a given component of excitation*

R_k = *Peak value of the response of the element due to the kth mode*

N = *Number of significant modes considered in the modal response combination*

R_s = *Peak value of the response of the element attributed to s^{th} mode*

where:

$$\varepsilon_{ks} = \left[1 + \left(\frac{(\omega_k - \omega_s)}{(\rho_k \omega_k + \beta_s \omega_s)} \right)^2 \right]^{-1}$$

in which:

$$\omega_k = \omega_k \left[1 - \beta_k^2 \right]^{1/2}$$

$$\beta_k = \beta_k + \frac{2}{t_d \omega_k}$$

where ω_k and β_k are the modal frequency and the damping ratio in the kth mode, respectively, and t_d is the duration of the earthquake.

3.7.2.1.6 Time-History Method of Analysis

The time-history of ground acceleration, $\ddot{v}_g(t)$, is defined at discrete time intervals. *The acceleration is approximated by a segmentally linear function and the solution to Duhamel's Integral (Equation 3.7.2.1-5) is obtained by using a step-by-step integration procedure (Reference 3.7-7).*

$Y_r(t)$ is computed as a function of time for $r = 1,2,3,\ldots,n$, where n is the number of significant modes of the system. The modal displacements, $\underline{v_r(t)}$, at the time t for the rth mode, are then calculated from

$$\underline{v_r(t)} = \underline{\phi_r} Y_r(t) \qquad \textit{(Eq. 3.7.2.1-14)}$$

The total displacements, $\underline{v(t)}$, of the structure at any time, t, are obtained by adding the individual modal displacements at time t:

$$\underline{v(t)} = \underline{v_1(t)} + \underline{v_2(t)} + \cdots + \underline{v_n(t)} \qquad \textit{(Eq. 3.7.2.1-15)}$$

The inertia forces, $\underline{F_r(t)}$, at time t, for the rth mode are determined from

$$\underline{F_r(t)} = \underline{k}\ \underline{v_r(t)} \qquad \textit{(Eq. 3.7.2.1-16)}$$

The total inertia forces, $\underline{F(t)}$, on the structure at any time t, are obtained by adding the individual modal inertia forces at time t.

$$\underline{F(t)} = \underline{F_1(t)} + \underline{F_2(t)} + \cdots + \underline{F_n(t)} \qquad \textit{(Eq. 3.7.2.1-17)}$$

Once the time-histories of the displacements and inertia forces have been determined, the time-histories of internal forces, such as shears and moments, for each mode are determined by conventional structural analysis procedures. The total internal forces are obtained by adding the internal forces from each mode at each increment of time. For example, the matrix of the desired moments, $\underline{M(t)}$, is calculated from

$$\underline{M(t)} = \underline{M_1(t)} + \underline{M_2(t)} + \cdots + \underline{M_n(t)} \qquad \textit{(Eq. 3.7.2.1-18)}$$

where $\underline{M_1(t)},\cdots,\underline{M_n(t)}$ are the time-histories of moments in the individual modes. The maximum values of the internal forces are determined and used for design.

3.7.2.1.7 Analysis for Differential Support Displacements

Certain Seismic Category I systems (piping runs, electrical raceways and supports, duct runs, etc.), and particularly those spanning between different structures are subject to differential support displacements. Seismic Category I system components so effected are analyzed for such effects. The relative support displacements are obtained from the dynamic analysis of structures and are imposed on the systems analyzed thus determining through a static analysis the additional stresses due to relative support displacements.

Stresses due to relative displacements of supports for piping runs are combined with other stresses as described in Section 3.9.3.1.1.7.

For Seismic Category I raceways and cables spanning between different structures subject to differential movements, a flexible transition is made in the system. The transition includes a slack section in cables and a flexible section in the raceways. The slack in the cable sections and flexibility in the raceway sections are sufficient to accommodate the expected differential movements.

Conduit crossing expansion joints or vibration joints in concrete slabs are provided with suitable vibration or expansion fittings to compensate for the building vibration, expansion, and contraction.

For Seismic Category I ductwork spanning between different structures subject to differential movements, a flexible transition is made. The transition includes a slack section in the ductwork and sufficient flexibility in the system to accommodate the expected differential movements.

3.7.2.1.8 Dynamic Analysis of Seismic Category I Structures, Systems, and Components

Seismic Category I SSCs are analyzed for earthquake effects using either response spectrum or time-history methods of analysis.

3.7.2.1.8.1 Dynamic Analysis of Buildings. All Seismic Category I structures were analyzed by the response spectrum method of analysis and the results of the analyses were used in the design of these structures. Modal maxima were combined as described in Section 3.7.2.1.5. Seismic Category I structures for which floor response spectra are required were also analyzed by the time-history method of analysis. The analyses were performed assuming the horizontal ground motion to act in either of two orthogonal directions, North-South and East-West. Maximum stresses resulting from any one horizontal and the vertical excitations were considered to act simultaneously and were added using the absolute sum method.

3.7.2.1.8.2 Dynamic Analysis of Piping Systems. Each pipe line was idealized by a mathematical model consisting of lumped masses connected by elastic members. The stiffness matrix for the piping system was determined using the elastic properties of the pipe. This includes the effects of torsion, bending, shear, and axial deformations as well as change in stiffness due to curved members. The mode shapes and the undamped natural frequencies were determined. The dynamic response of the system was calculated by using either the response spectrum or time-history method of analysis. When the piping system is anchored and supported at points with different excitations, the response spectrum analysis was performed using the envelope response spectrum of all attachment points. Alternatively, the multiple excitation analyses methods may be used where acceleration time histories or response spectra are applied to all piping system attachment points.

The analyses were performed assuming the horizontal ground motion to act in either of two orthogonal directions, North-South or East-West. Any one of the horizontal and vertical excitations were considered to act simultaneously. Moments and forces from each of the horizontal and vertical excitations considered, are added as described in C.3 discussion for Regulatory Guide 1.92.

The relative displacements between anchors were determined from the dynamic analysis of the structures. These relative displacements are then used in a static analysis to determine the additional stresses imposed on the piping system.

An alternate simplified method of dynamic analysis was used for cold and/or limber piping systems. This is the equivalent static load method for piping. This method consists of applying constant horizontal and vertical load factors conservatively derived from seismic floor response spectra.

The description of the method is as follows: Enveloped seismic building response spectra were derived from widened seismic floor response spectra. (The widening of the building response spectra is described in Section 3.7.2.5). The piping system was then supported seismically such that the minimum fundamental frequency was chosen to be above the spectral peak of the enveloped response spectrum for any given span of pipe between adjacent supports. Thus, the initial maximum seismic support spans were analytically determined from this model for the chosen fundamental frequency. The static "g" levels acting on the piping system were then obtained from the enveloped response spectra assuming that the frequencies of the piping system is at or above the chosen frequency. These maximum spans were modified, if required, so that the maximum stresses did not exceed a conservative value of maximum stress based on the American Society of Mechanical Engineers (ASME) Code allowables and a limiting piping deflection between supports.

In the application of the alternate simplified method, a conservative static "g" loading was chosen for all piping systems when this approach was used irrespective of the building or building elevation. This simplified the work and results in different amounts of conservatism for different piping systems. To confirm the adequacy of the alternate simplified method, a study was performed for several representative piping systems. Pipe stress and pipe support loads were calculated for these representative systems using response spectrum analysis method. Results were examined to confirm that both pipe stresses and pipe support loads were calculated using the equivalent static load method.

3.7.2.1.8.3 Dynamic Analysis of Equipment. Equipment is idealized by a mathematical model consisting of lumped masses connected by elastic members or springs. Results for selected Seismic Category I equipment are given in Table 3.9-2. The dynamic response of the system was originally calculated by using the response spectrum method of analysis. When the equipment is supported at two or more points at different elevations, the response spectrum

analysis was performed by using the response spectra at the elevation near the center of gravity of the equipment as the design spectra for the NSSS equipment, and for balance-of-plant using the envelope of response spectra for supports. Modal maxima were combined as described in Section 3.7.2.1.5. The analyses were performed assuming the horizontal ground motion to act in either of two orthogonal directions, North-South and East-West. Maximum stresses resulting from any one horizontal or vertical excitation are considered to act simultaneously and the absolute values are added directly, as described in Sections 3.7.2.6 and 3.7.2.7.

The relative displacements between anchors are determined from the dynamic analysis of the structures. All cases of relative displacement between anchors are considered. If significant, these relative displacements are then used in a static analysis to determine additional stresses imposed on equipment. Further details are given in Section 3.7.2.1.8.3.1 for the NSSS equipment and Section 3.7.3.9 for all other equipment. The cases where the relative displacements between anchors are insignificant and thus neglected in the analysis are those cases where the equipment is supported on a single structural element as a floor slab or wall. Typical examples where relative displacements are considered insignificant are a bank of electrical switchgear located on and anchored to a single floor slab, a diesel generator set located on and anchored to a single isolated foundation, and an air handling unit located on and anchored to a single wall.

3.7.2.1.8.3.1 Differential Seismic Movement of Interconnected Components. The procedure for considering differential displacements for equipment anchored and supported at points with different displacement excitation is as follows.

Relative displacement between the supporting points induces additional stresses in the supported equipment. These stresses can be evaluated by performing a static analysis where each supporting point is displaced a prescribed amount. From the dynamic analysis of the complete structure, the time history of displacement at each supporting point is available. The maximum relative displacements obtained from the time history were used to calculate stresses statistically.

In the static calculation of the stresses due to relative displacements in the response spectrum method, the modal relative displacement was used. The mathematical model of the equipment was then subjected to the modal relative displacement at its supporting points. This procedure was repeated for the significant modes (modes contributing most to the total displacement response at the supporting point) of the structure. The total stress due to relative displacement was obtained by combining the modal results using the method described in Section 3.7.2.1.5.1.

When a component is covered by the ASME Boiler and Pressure Vessel (B&PV) Code, the stresses due to relative displacement as obtained above are treated as secondary stresses.

3.7.2.1.9 Equivalent Static Load Method

This method of analysis is used for design of certain systems:

a. Unless otherwise justified, for systems which can be realistically represented by a simple model, the equivalent static acceleration corresponds to the response spectrum value at the system natural frequency times a factor of 1.5 providing the spectrum is single peaked. If the response spectrum has multiple peaks and the natural frequency lies between two peaks or below a peak, the equivalent static acceleration corresponds to the highest peak located above the natural frequency times a factor of 1.5. If the natural frequency of the system is not known, the equivalent static acceleration corresponds to the response spectrum peak (highest) times a factor of 1.5. If the system natural frequency is at or above the zero period acceleration (ZPA) of the response spectrum, the equivalent static acceleration is the ZPA with no multiplication factor required.

b. Equivalent static load method for piping is described in Section 3.7.2.1.8.2.

3.7.2.1.10 Dynamic Testing

When certain Seismic Category I equipment and components potential functional failure cannot be evaluated analytically (i.e., when structural integrity alone cannot ensure the design intended function), dynamic testing is used to ensure operability. For example, dynamic tests of electrical items are performed in accordance with the requirements of IEEE Standard 344 (Reference 3.7-8). Test performance data and results are obtained either from previously tested comparable equipment or from the actual testing of equipment supplied. When seismic testing is impractical, a combination of test and analysis is used. Other dynamic test procedures which conservatively simulate the seismic conditions for the equipment are also used when found acceptable by the engineer.

Seismic Category I equipment which is difficult to represent by a mathematical model or which is required to demonstrate its ability to remain operating without changing the mode of its operation (such as level switch which should not switch from “on” to “off” or vice versa during the earthquake) was subjected to actual vibration inputs on shake tables. These shake tests were performed by qualified laboratories.

The seismic qualification tests conducted in the laboratory generally consist of the following:

a. The equipment was mounted on the shake table in such a manner as to represent its installed condition;

b. Sine sweep tests were performed covering all practicable frequency ranges with constant or variable acceleration levels to determine the natural resonant

frequencies of the equipment. This procedure enables the determination of the predominant resonant frequencies, by monitoring the output response; and

c. Proof testing was then performed to establish the capability of equipment to function during the particular seismic event and withstand the effects of the particular seismic event, represented by the required response spectra at the appropriate damping level. This was accomplished by using one of the following methods.

1. Sine dwell tests

This test utilizes a sine wave function with one of the equipment natural frequencies and acceleration levels equal to or greater than the corresponding maximum floor acceleration as input. The test duration is generally 30 sec, during which time the behavior of the equipment is observed and recorded. This test is performed at all equipment resonances and at frequencies spaced apart throughout the frequency range. Alternately, the test may be performed only at the equipment resonances when justified.

2. Sine beat tests

A sine beat function with the number of beats and cycles per beat corresponding to the equipment natural frequency and with predetermined acceleration level equal to or greater than the corresponding maximum floor acceleration, is used as input motion to test and record the behavior of the equipment.

3. Random motion tests

A random waveform motion consisting of frequency bandwidths one-third octave apart over the practicable frequency range is used in this test. The amplitude of each frequency bandwidth is independently adjusted in each axis until the test response spectra exceeds the required response spectra. The behavior of the equipment was observed and recorded to ensure its capability to withstand the input vibrations.

3.7.2.2 Natural Frequencies and Response Loads

A summary of natural frequencies, natural mode shapes, and modal responses (displacements, accelerations, moments, and shears) were provided for the significant modes of the reactor building and are shown in Figure 3.7-11 and Tables 3.7-3 through 3.7-15. The modal responses are for the OBE and SSE, for one horizontal (North-South) and the vertical

directions. All Seismic Category I structures were also analyzed by the time-history method of analysis, using as input the synthetic motion obtained as described in Section 3.7.1.2, to develop floor response spectra to be used in design of systems, components, and equipment housed in these structures. Floor response spectrum curves were computed at all lumped-mass points of Seismic Category I structures as described in Section 3.7.1.1. These curves are for the SSE and the OBE, for two horizontal orthogonal (North-South and East-West) and the vertical directions, with equipment damping values of 0.5, 1, 2, and 5 of critical damping and for equipment natural periods ranging from 0.03 to 2.50 sec per cycle. Typical floor response spectra are shown in Figures 3.7-12 and 3.7-15 through 3.7-21 for the reactor building at refueling floor and mat elevations.

3.7.2.3 Procedure Used for Modeling

Seismic Category I SSCs were modeled as a system of lumped masses and springs suitable for mathematical analysis. Each system analyzed is thus replaced by a discrete set of lumped masses, springs, and dashpots, idealizing both the inertia and stiffness properties of the system. The details of the mathematical models are determined by the complexity of the actual structure and the information required for the analysis.

Seismic subsystems, such as equipment and piping [with the exception of the reactor pressure vessel (RPV)], were decoupled from the structure as described in Section 3.7.2.3.1 by lumping their mass contribution to the structural model.

The seismic subsystems were then analyzed separately using the seismic input from the analysis of the structure. Where a subsystem is comparatively rigid and rigidly connected to the primary system, only the mass of the subsystem at the support point is included in the primary system model. Where the subsystem is flexible, such as pipe supported by hangers or equipment mounted on nonrigid supports, a coupled dynamic analysis was performed for both the subsystem and primary system.

The criteria used for decoupling piping systems, other than the NSSS piping systems, to establish the analytical models for seismic analysis are discussed in Section 3.9.3.1.18.5, and have been demonstrated as equivalent to the decoupling criteria outlined by Paragraph II.36 of Reference 3.7-15. The criteria for the NSSS main steam and recirculation piping systems are discussed below.

For NSSS systems and components, the ASME B&PV Code Section III requires that piping systems be designed and analyzed as complete systems from anchor to anchor. A complete piping system must include the subject piping system, all major branch line piping, and all equipment reached to the pipe which influences stresses and movement of the pipe. The piping systems within the General Electric contractual scope for which seismic analysis is performed are as follows:

a. Main steam piping from the RPV in the first anchor at the penetration head fittings, and

b. Reactor recirculation piping bound by the RPV nozzles.

The criteria employed for decoupling the main steam and recirculation piping systems to establish the analytical models for seismic analysis are given below:

a. Small branch lines (6 in. diameter and less) are decoupled from the main steam and recirculation piping systems and analyzed separately; and

b. The stiffness of all the anchors and its supporting steel is large enough to effectively decouple the piping on either side of the anchor for analytic code jurisdiction boundary purposes. The RPV is very stiff compared to the piping system and, therefore, during normal operating conditions, the RPV is assumed to act as an anchor. Penetration assemblies (heat fitting) are also stiff compared to the piping system and are assumed to act as an anchor. The stiffness matrix at the attachment location of the process pipe [i.e., main steam, reactor core isolation cooling (RCIC), residual heat removal (RHR) supply or RHR return] head fitting is sufficient to decouple the penetration assembly from the process pipe. General Electric analysis indicates that a satisfactory minimum stiffness for this attachment point is equivalent to the stiffness in bending and torsion of a cantilever equal to a pipe section of the same size as the process pipe and equal in length to three times the process pipe outer diameter.

Application of above criteria for analyses of the subject piping systems is as follows:

a. The main steam piping upstream of the outboard isolation valve (OBIV) is decoupled from the piping downstream of the OBIV at the first anchor at the penetration head fitting, and

b. The major branch lines which affect the stresses in the main steam and recirculation piping are incorporated in the analytical model for analysis. The system is not decoupled until it reaches the following virtual anchors:

    1. RCIC steam piping upstream of the OBIV is decoupled from the piping downstream of the OBIV at the first anchor at the penetration head fitting.

    2. Safety/relief valve discharge piping originating from the relief valve discharge flange is decoupled at each safety/relief discharge line first anchor at the suppression pool floor.

3. Residual heat removal supply and return piping (connected with the recirculation piping) upstream of the OBIV are each decoupled from the piping downstream of the OBIV at the first anchor at the penetration head fitting.

3.7.2.3.1 Modeling of Structures

In constructing the mathematical model of a structure, the locations for lumped masses were chosen at floor levels and points considered of critical interest such as supports/anchors for equipment and systems. The lumped mass comprises the weight of afferent walls, floors and other dead loads, including weight of systems supported on or hanging from the floor (pipes, ducts, raceways, etc.), and the weight of equipment mounted on the floor. It has been estimated that the equipment load constitutes, generally, less than 10% of the total weight associated with any lumped mass and is not expected to significantly effect the overall behavior of the structure. Between mass points, the structural properties were reduced to uniform segments of cross-sectional area, effective shear areas, and moments of inertia. Thus, the masses of the system were connected by weightless linear elastic springs which account for the axial (direct), flexural, and shear stress effects of the structure. Soil-structure dynamic interaction effects were considered by attaching basemat, assumed rigid, a set of equivalent springs, and dashpots as described in Section 3.7.2.4.

Typical mathematical models for the reactor building soil-structure lumped-mass system for horizontal and vertical input motions and the associated reactor building section are shown in Figures 3.7-13 and 3.8-1.

3.7.2.3.2 Modeling of Piping Systems

The continuous piping system is modeled as an assemblage of beams. The mass of each beam is lumped at the nodes and connected by a weightless elastic member, representing the physical properties of each segment. The pipe lengths between mass points must be sufficiently short, so as not to affect the accuracy of the dynamic analysis. The lengths utilized were determined by parametric studies. The resulting lengths are such that frequencies computed on the basis of a simply supported beam are no less than 33 Hz for all piping including the NSSS systems and components. All concentrated weights on the piping system such as main valves, relief valves, including valve operators with extended structures, and points of significant change in the geometry of the system, are modeled as lumped masses. The torsional effects of the valve operators and other equipment with offset centers of gravity, with respect to centerline of the pipe, are included in the analytical model. If the torsional stress is less than 500 psi, it is considered to be permissible to neglect this effect. Equipment nozzles are generally considered as boundaries for the piping systems. Inline spring-mounted equipment is modeled as a lumped mass.

3.7.2.3.3 Modeling of Equipment

For dynamic analysis, Seismic Category I equipment is represented by lumped mass systems that consist of discrete masses connected by weightless springs. The criteria used to lump masses are

a. The number of modes of a dynamic system is controlled by the number of masses used. Therefore, the number of masses is chosen so that all significant modes are included. The modes are considered significant if the corresponding natural frequencies are less than 33 Hz and the stress calculated from these modes are estimated to amount to a significant percentage (approximately greater than 10%) of the total stresses calculated from lower modes;

b. Mass is lumped at any point where a significant concentrated weight is located. Examples are the motor in the analysis of pump motor stand, or the impeller in the analysis of pump shaft;

c. If the equipment has a free-end overhang span whose flexibility is significant compared to the center span, a mass is lumped at the overhang span; and

d. When a mass is lumped between two supports, it is located at a point where the maximum displacement is expected to occur. This tends to conservatively lower the natural frequencies of the equipment. Similarly, in the case of live loads (mobile) and a variable support stiffness, the location of the load and the magnitude of support stiffness are chosen so as to yield the lowest frequency content for the system. This is to ensure conservative dynamic loads since equipment frequencies are such that the floor spectra peak is in the lower frequency range. If such is not the case, the model is adjusted to give more conservative results.

3.7.2.3.4 Modeling of Reactor Pressure Vessel and Internals

The seismic loads on the RPV and internals were based on a dynamic analysis of an entire RPV-building complex with appropriate forcing function supplied at ground level. For this analysis, the seismic model of the RPV and internals, as shown in Figure 3.7-14, and the mathematical model of the building were coupled together.

This mathematical model consists of lumped masses connected by elastic (linear) members. Using the elastic properties of the structural components, the stiffness properties of the model are determined. This includes the effects of both bending and shear. To facilitate hydrodynamic mass calculations, several mass points (representing fuel, shroud, and vessel) are selected at the same elevation. Mass points are located at all points of critical interest such as anchors, supports, and points of discontinuity, etc. In addition, mass points are chosen such

that the total mass of the structure is generally uniformly distributed over all the mass points, and the full range of frequency of response of interest is adequately represented.

The various lengths of control rod drive (CRD) housings were grouped into two representative lengths. These lengths represent the longest and shortest housings to adequately represent the full range of frequency response of the housings. The high fundamental nature frequencies of the CRD housings result in very small seismic loads. The small frequency differences between the various housings due to the length differences result in negligible differences in dynamic response. Hence, the modeling of intermediate length members becomes unnecessary. Not included in the mathematical model are light components such as jet pumps, in-core guide tubes and housings, spargers, and their supply headers. This reduces the complexity of the dynamic model. If the seismic responses of these components are needed, they can be determined after the system response has been found.

The presence of a fluid or other structural components (e.g., fuel within the RPV) introduces a dynamic coupling effect. Dynamic effects of water enclosed by the RPV were accounted for by a hydrodynamic mass matrix, which links the acceleration terms of the equations of motion of points at the same elevation in concentric cylinders with fluid entrapped in the annulus. The details of the hydrodynamic mass derivation are given in Reference 3.7-11. The seismic model of the RPV and intervals has two horizontal coordinates for each mass point. The remaining translational coordinate (vertical) is excluded because the vertical frequencies of the RPV and internals are well above the significant horizontal frequencies. All support structures, building, and containment walls are negligible. A separate generic and applicable vertical analysis is performed. Dynamic loads due to vertical motion are added to or subtracted from (whichever is more conservative), the static weight of components. The two rotational coordinates about each node point are excluded because of the moment contribution of rotary inertia from surrounding nodes. Since all deflections are assumed to be within the elastic range, the rigidity of some components is represented by equivalent linear springs.

The shroud support plate is loaded in its own plane during a seismic event and hence is extremely stiff. Therefore, the shroud support plate is modeled as a rigid link in the translational direction. The shroud support legs and the local flexibilities of the vessel and shroud contribute to the rotational flexibilities and are modeled as an equivalent rotational spring.

3.7.2.4 Soil/Structure Interaction

Soil/structure interactions were taken into account by coupling the structural model with the foundation medium.

The lumped mass-spring method was used to represent soil/structure interactions; and was obtained from a simplified mechanical analog to the model of a rigid mat resting on the surface of an elastic half space. The resulting compliance functions were approximated by the

frequency independent springs and dashpots (Reference 3.7-5) and are listed in Table 3.7-16. The spring and dashpot constants depend on the geometry of the foundation and on the dynamic properties of the soil. The selected ranges of values for the equivalent dynamic shear modulus, G (which are used in the dynamic analysis), were derived (Reference 3.7-6) by interpreting data from laboratory tests and measurements of seismic velocities adjusted for calculated strains. The ranges of G values are as follows:

Mode	Lower Bound (ksi)	Average Value (ksi)	Upper Bound (ksi)
Horizontal translatory and rocking	50	75	100
Vertical translatory	80	120	160

Based on additional studies performed for CGS, it was found that the use of the elastic half-space/compliance function method and the finite element method for soil/structure interaction analysis yield very comparable results. Therefore, either method is considered acceptable for seismic soil/structure interaction analysis of the CGS plant.

3.7.2.5 Development of Floor Response Spectra

All Seismic Category I structures were analyzed by the time-history method of analysis to obtain time histories of the structural response at points within these structures. The acceleration histories are used to generate floor response spectra.

The floor response spectra are computed for the SSE and the OBE for the two horizontal orthogonal directions and the vertical direction.

Spectral values, (the maximum response of a single degree-of-freedom oscillator) are obtained using a step-by-step integration (Reference 3.7-7). The analytical solution assumed that the acceleration histories of structural response are linear within the time interval of 0.02 sec. The integration was performed at either the 0.02 sec time intervals or at 0.05 times the natural period of the single degree-of-freedom oscillator, whichever was smaller.

The discrete periods or frequencies used in the calculation of the floor response spectra are in compliance with the values suggested in Regulatory Guide 1.122, Revision 0, September 1976.

To account for variations in structural frequencies, the peaks of the computed floor response spectra associated with each of the structural frequencies were widened by no less than +15%

for all Seismic Category I structures analyzed using lumped-mass stick models. The only exceptions were the standby service water pump house (SSWP) spectra where peaks were widened by only +10%. In lieu of performing an analysis to justify the 10% peak broadening of the SSWP spectra, the effects of using a 15% peak broadening of the same response spectra were reviewed. Examination of representative Seismic Category I equipment demonstrates that the equipment meets the 15% broadened curves. In addition, these response spectra are conservative since they are developed using a lumped mass spring model and conservative soil damping values of Table 3.7-1.

For the primary metal containment, the RPV, the RPV pedestal, and the sacrificial shield wall, the response spectra were widened by no less than +10%. However, these spectral data are obtained from the seismic analysis of the finite element building model which included the soil-structure interaction effects. This analysis was performed in accordance with the provisions of Regulatory Guides 1.60, 1.61, 1.92, and 1.122, and Standard Review Plan Section 3.7.2.

3.7.2.6 Three Components of Earthquake Motion

The use of three components of earthquake motion, as described by Regulatory Guide 1.92, Revision 1, was not a requirement for the issuance of the CGS construction permit. The total seismic response was calculated by combining the response calculated from analyses due to one horizontal and one vertical seismic input.

Two sets of seismic results were obtained. First the maximum value of the horizontal component of the earthquake was assumed to act in one horizontal direction simultaneously with the vertical component, and the loads were computed for this combination.

The maximum value of the horizontal component of the earthquake was assumed to act perpendicular to the direction previously assumed and simultaneously with the vertical component, and loads were computed for this combination. The larger of these two loads, at each point in the system, was used for design.

This method of analysis was based on the fact that the maximum resultant value of the horizontal component of the earthquake is determined when the horizontal component of the SSE is specified. This method conservatively assumes that the maximum horizontal and vertical components of the earthquake response occur simultaneously.

In accordance with Regulatory Guide 1.92, Revision 1, an alternative procedure is also acceptable for combining seismic responses, when designing structures, systems, or components submitted to the simultaneous action of three orthogonal earthquake motions. In this case the combined three-dimensional earthquake effect can be obtained for any structural response as the SRSS of the codirectional maximum responses caused by each of the three

earthquake components acting separately. Results of either modal response spectrum or time-history dynamic analyses can be processed this way.

The SRSS method of superposition, as summarized herein, may be used in conjunction with any mathematical model of SSCs, provided a complete set of three earthquake components is utilized as input in the dynamic analysis of that particular model. It should be noted that a comparison of response spectra clearly demonstrates that the original design basis (2-D method ABS) is more conservative than the SRSS/3 component method for all frequencies larger than 1.25 Hz. In the frequency range of interest for the CGS plant (approximately greater than 5 Hz), the margin of conservatism is very significant.

3.7.2.7 Combination of Modal Responses

When the response spectrum method of modal analysis is used, modal maxima are combined as described in Section 3.7.2.1.5.

3.7.2.8 Interaction of Non-Category I Structures With Seismic Category I Structures

The interfaces between Seismic Category I and non-Category I structures and plant equipment have been designed for the dynamic loads and displacements of both Seismic Category I and non-Category I structures and plant equipment. In addition, all non-Category I structures meet one of the following requirements:

a. The collapse of any non-Category I structure does not cause the non-Category I structure to strike a Seismic Category I structure or component,

b. The collapse of any non-Category I structure does not impair the integrity of Seismic Category I structures or components,

c. The non-Category I structures are analyzed and designed to prevent their failure under SSE in a manner such that the margin of safety of these structures is equivalent to that of Seismic Category I structures, and

d. The collapse of non-Category I structures will not prevent the functioning of Seismic Category I structures or components.

3.7.2.9 Effects of Parameter Variations on Floor Response Spectra

Variations in structural properties, damping, soil properties, and soil/structure interaction parameters could result in the shifting of calculated periods to resonant peaks in the floor response spectra. To account for the effects of such variations on the shape of calculated floor response spectra, smooth design envelopes which incorporate a minimum shift of the periods corresponding to calculated resonant peaks were developed and used in seismic design of

systems, equipment and components. The shift in resonant peaks covers at least the calculated variations in natural periods due to the probable variation in soil properties of +33-1/3% (see Section 3.7.2.4) and is never less than 10%. The actual shift in resonant peaks exceeds in some cases 15% as may be seen from Figures 3.7-12 and 3.7-15 through 3.7-21. Less significant variations in peak response values are also expected as a result of variations in structural properties used in dynamic analysis. The use of conservative damping coefficients and of smooth design spectrum envelopes in seismic design of systems, equipment, and components is adequate to account for variations in peak response values.

3.7.2.10 Use of Constant Vertical Static Factors

Seismic Category I SSCs were subjected to a vertical dynamic analysis with the vertical response spectra defining the input, with the exception that a static analysis can be performed in lieu of dynamic analysis as described in Section 3.7.2.1.9.

3.7.2.11 Method Used to Account for Torsional Effects

For nonsymmetrical structures, a stiffness analysis was performed to determine torsional effects on vertical structural elements resisting lateral loads. Inertial forces, determined from dynamic analysis of structures, were applied at the center of mass for each floor. Thus, torsion effects were introduced in each story by applying a twisting moment about the center of rigidity of the story under consideration. This moment is calculated as the sum of the products of the inertial force applied at the center of mass of each floor above and a lever arm equal to the distance from the center of mass of the floor to the center of rigidity of the story. The lever arm was not less than the minimum eccentricity required by the Uniform Building Code (Reference 3.7-9). The torsional moment and story shear were distributed to the resisting elements in accordance with the provisions of the Uniform Building Code.

Symmetrical structures were analyzed in a similar manner for torsional effects using minimum eccentricities between the center of mass and the center of rigidity as defined by the Uniform Building Code.

Calculation of torsional effects using a dynamic analysis that considers coupled translational and torsional degrees of freedom was also performed. The new torsional effects were compared with those loads derived by the design methodology prescribed above. Structures subjected to the new torsional moments were investigated and found to be structurally adequate under the new torsional loads considered in conjunction with the applicable load combinations.

3.7.2.12 Comparison of Responses

Comparisons of structural responses (accelerations) of the reactor building were obtained using (a) the response spectrum method with the site design response spectra, and (b) the time-history method with the simulated time-history of earthquake acceleration described in

Section 3.7.1.2 are presented in Figure 3.7-22. These results demonstrate the conservatism inherent in the simulation process illustrated by Figures 3.7-6 through 3.7-10, and carried over in the calculation of floor response spectra used in seismic design of systems, components, and equipment. A more appropriate comparison was obtained between structural responses (acceleration) of the reactor building obtained using (a) the response spectrum method with response spectra calculated from the simulated earthquake acceleration, and (b) the time-history method. These are also in Figure 3.7-22 and show good agreement between the results obtained using the two methods of dynamic modal analysis.

3.7.2.13 Methods for Seismic Analysis of Dams

No Seismic Category I dams are utilized in this facility.

3.7.2.14 Determination of Seismic Category I Structure Overturning Moments

Overturning and sliding effects of horizontal seismic loadings were considered in combination with the effects of vertical seismic loadings. The seismic loads used consist of two horizontal orthogonal and vertical components of earthquake motions. Each horizontal component was taken separately and is applied concurrently with the vertical component. For Seismic Category I structures, the results of the dynamic analysis were converted to equivalent static loads at the mass points.

Seismic Category I structures are located above the present groundwater elevation of 380 ft msl. However, uplift and lateral hydrostatic pressures are considered, taking into account the maximum groundwater elevation of 420 ft msl in the event the Ben Franklin Dam is constructed, as discussed in Section 3.4. The uplift and hydrostatic pressures, including seismic effects due to dry and saturated soils, as applicable, are applied concurrently.

To calculate the capability of safety-related structures to resist overturning, the following load combinations were considered:

a. D + E + Q* + Uplift
b. D + W + Q + Uplift
c. D + E′ + Q* + Uplift
d. D + W′ + Q + Uplift

Load combination in item c. above is used since the resulting horizontal and vertical forces produce the maximum overturning effects. The load terms in the load combinations are defined in Section 3.8.4.3.3, except as follows:

a. The dead load, D, also includes the weight of dry and saturated backfill, as applicable, and

b. The uplift force, not included in Section 3.8.4.3.3, is taken as the weight of the water displaced by the structure, acting vertically upward and applied to the bottom surface of the basemat.

The overturning moments and the stabilizing moments were calculated about the lower edge (toe) of the basemat. The safety factor against overturning was calculated by dividing the total stabilizing moment by the total overturning moment.

To calculate the capability of safety-related structures to resist sliding, the load combinations considered are the same as those listed above for calculating the capability of safety-related structures to resist overturning. Load combination c was used and produces the maximum sliding effects. The safety factor against sliding was calculated by dividing the frictional force resisting sliding between the basemat and the soil by the summation of horizontal forces causing sliding.

The factors of safety against overturning and sliding for safety-related structures are tabulated in Section 3.8.5.5.

3.7.2.15 Analysis Procedure for Damping

For structures and components, damping coefficients are selected as discussed in Section 3.7.1.3.

For the foundation materials, either internal or radiational damping or both are considered. The horizontal translation, vertical translation, and rocking motion damping values are determined as described in Reference 3.7-5.

The selected design values were significantly smaller than the calculated values. Table 3.7-1 presents the design values of the damping coefficients used. The formulas presented in Table 3.7-16 were used to calculate the realistic damping coefficients.

For composite structures made up from different materials, when the various components cannot be decoupled due to interaction effects, an approximate weighted average damping value was used for each mode of vibration of the structure. This is accomplished by breaking the mode shapes into their various components, then assigning a damping value to each component depending on the principal action of this component. A weighted average value is then determined for the particular mode under consideration. In this manner, a composite damping value is determined for each mode and the total response is calculated in the regular manner.

The method of obtaining weighted average damping values and how they were applied to the original design was obtained from the following relation:

$$D_n = \frac{D_s E_{sn} + D_h E_{hn} + D_r E_{rn}}{E_{sn} + E_{hn} + E_{rn}} \qquad \textit{(Eq. 3.7.2.15-1)}$$

where

D_n = *Weighted average damping for the nth mode*

D_s = *Damping ratio for the superstructure*

D_h = *Damping ratio for the horizontal translation*

D_r = *Damping ratio for the rocking motion*

E_{sn} = *Energy stored in the superstructure*

E_{hn} = *Energy stored in the horizontal spring*

E_{rn} = *Energy stored in the rocking spring*

The basis for Equation 3.7.2.15-1 is presented as Equation (4) in Reference 3.7-15.

In a linear dynamic analysis for the NSSS Systems and components the procedure to be utilized to properly account for damping in different elements of a coupled system model is as follows:

a. *A structural damping of the various structural elements of the model are first specified. Each value is referred to as the damping ratio (B_j) of a particular component which contributes to the complete stiffness of the system;*

b. *Perform a modal analysis of the linear system model. This will result in a modal matrix (ϕ) normalized such that $\phi_i^T K \phi_i W_i^2$, where K is the stiffness matrix, W_i the circular natural frequency of mode i and ϕ_i^T is the transpose ϕ, which is a column vector of ϕ corresponding to the mode shape of mode i. Matrix ϕ contains all translational and rotational coordinates; and*

c. *Using the strain energy of the individual components as a weighting function, the following equation can be derived to obtain a suitable damping ratio (B_i) for the ith mode.*

$$B = \frac{\sum_{j=1}^{N} \phi_{i_j}^{T} B_j K_j \phi_{ij}}{w_i^2} \qquad \textit{(Eq. 3.7.2.15-2)}$$

where

N = *Total number of structural elements*

f = *Mode shape for mode i (f as transpose)*

B_j = *Percent damping associated with element j*

K_j = *Stiffness contribution of element j*

W_i = *Circular natural frequency of mode i*

The original piping design calculations, as indicated in Table 3.7-1, have considered damping values lower than or equal to those permitted by Regulatory Guide 1.61. For piping reanalyses or for snubber support optimization, the following damping values, as stated in ASME Code Case N-411, may be used in both the OBE and SSE spectrum analyses of the ASME Class 1, 2, and 3 piping systems:

Frequency Range (Hz)	Critical Damping (%)
0-10	5
10-20	5 decreasing linearly to 2
Above 20	2

Subject to the requirements of NRC correspondence regarding Regulatory Guide 1.84 (Reference 3.7-13), the code case may be applied to any piping system including those located in the SSWPs. The SSWP spectral peaks shall be broadened by 15% when Code Case N-411 is applied. It may be noted that the seismic spectra for CGS were developed using either the ground response spectra as defined in Regulatory Guide 1.60, Revision 1, or were properly justified by studies to be similar to those which could have been obtained per Regulatory Guide 1.60. Also, the peak broading requirements of Regulatory Guide 1.122 is met in all cases except for SSWP spectra as noted.

The original design basis for CGS required that responses due to inertial loads be combined with seismic anchor motion loads by the absolute sum method. For snubber optimization or any reconciliation work, based on the recommendation of NUREG-1061, Volume 4, the SSRS methodology for the combination of inertial and seismic anchor motion loads is utilized.

3.7.3 SEISMIC SUBSYSTEM ANALYSIS

The general approach to the seismic subsystem analysis is identical to those procedures described in Section 3.7.2 for seismic system analysis, except for the soil/structure interaction effects.

3.7.3.1 Seismic Analysis Methods

The seismic analysis method used to analyze Seismic Category I subsystems is described in Section 3.7.2.1.

3.7.3.2 Determination of Number of Earthquake Cycles

3.7.3.2.1 Number of Cycles for All Items Except Nuclear Steam Supply System Systems and Components

Fatigue evaluation due to an SSE is not required by ASME Code Section III, since it qualifies as a faulted condition. The OBE is an upset condition and therefore, must be included in fatigue evaluations according to ASME Code Section III.

As a minimum, 50 maximum stress cycles due to OBE are used for fatigue evaluations of BOP piping and components.

3.7.3.2.2 Number of Cycles for Nuclear Steam Supply System Systems and Components

3.7.3.2.2.1 Nuclear Steam Supply System Piping. Fifty peak OBE cycles are postulated for fatigue evaluation.

3.7.3.2.2.2 Other Nuclear Steam Supply System Equipment and Components. To evaluate the number of cycles that exist within a given earthquake, a typical boiling water reactor building-reactor dynamic model was excited by three different recorded time histories: (a) May 18, 1940, El Centro NS component 29.4 sec, (b) 1952, Taft N 69° W component, 30 sec, and (c) March 1957, Golden Gate S 80E component, 13.2 sec. The model response was truncated such that the response of three different frequency bandwidths could be studied, (0-10 Hz, 10-20 Hz, and 20-50 Hz). This was done to provide a good approximation to the cyclic behavior expected from structures with different frequency content.

Enveloping the results from the three earthquakes and averaging the results from several different points of the dynamic model, the cyclic behavior, as given in Table 3.7-17, was formed.

Independent of earthquake or component frequency, 99.5% of the stress reversals occur below 75% of the maximum stress level, and 95% of the reversals lie below 50% of the maximum stress level.

In summary, the cyclic behavior number of fatigue cycles of a component during an earthquake is found in the following manner:

a. The fundamental frequency and peak seismic loads are found by a standard seismic analysis,

b. The number of cycles which the component experiences are found from Table 3.7-17 according to the frequency range within which the fundamental frequency lies, and

c. For fatigue evaluation, 0.005% of these cycles are conservatively assumed to be at the peak load and 4.5% are assumed to be at or above three-quarter peak. The remainder of the cycles has negligible contribution to fatigue usage.

The SSE has the highest level of response. However, the encounter probability of an SSE is so small that it is not necessary to postulate more than one SSE during the 40-year plant life. Fatigue evaluation due to the SSE is not necessary since it is a faulted condition and thus not required by ASME Code Section III.

The OBE is an upset condition and, therefore, must be included in fatigue evaluations according to ASME Code Section III. An investigation of seismic histories for many plants shows that during a 40-year life, it is probable that five earthquakes with intensities 10% of the SSE intensity, and one earthquake approximately 20% of the proposed SSE intensity, will occur. To cover the combined effects of these earthquakes and the cumulative effects of even lesser earthquakes, 10 peak OBE cycles are postulated for fatigue evaluation.

Table 3.7-18 shows the calculated number of fatigue cycles and the number of fatigue cycles used in design.

The Fatigue Management Program includes OBE, SRV, and chugging transients, consistent with the recommendations of the GALL Report to include monitoring of all plants transients that cause cycle strains to support a 60-year service life.

3.7.3.3 Procedure Used for Modeling

The procedure used for modeling for the subsystem dynamic analysis is described in Section 3.7.2.3.

The field location of seismic supports and restraints for Seismic Category I piping and piping system components is selected to satisfy the following two conditions:

a. Restraint locations are chosen sufficiently close to each other to limit the stress and strain of the piping system to acceptable values. Spring supports are not a

factor in seismic analysis. Seismic restraints are constructed sufficiently rigid so as to preclude interaction with the piping system; and

b. Structures are provided of sufficient capacity to support the seismic supports and restraints and to withstand the seismic and/or loss-of-coolant accident (LOCA) loads transferred to the supporting structure by the seismic support and/or restraint. The applicable load combinations in Tables 3.8-5, 3.8-6, 3.8-9, and 3.8-10 are used, depending on the loading conditions to which the structure could be subjected.

The final location of seismic supports and restraints for Quality Class 1, Seismic Category I piping, piping system components, and equipment, including the placement of snubbers, is checked against the drawings and instructions issued by the engineer. An additional examination of these supports and restraining devices is made to ensure that the location and characteristics of these supports and restraining devices are consistent with the dynamic and static analyses of the systems.

3.7.3.4 Basis for Selection of Frequencies

All frequencies in the 0.25 to 33 Hz range are considered in the analysis and testing of SSCs. These frequencies cover the natural frequencies of most of the components and structures under consideration. If the fundamental frequency of a component is greater than or equal to 33 Hz, it is treated as rigid and analyzed accordingly. Frequencies less than 0.25 Hz are not usually considered, as they represent very flexible structures and are not normally encountered in this plant.

3.7.3.5 Use of Equivalent Static Load Method of Analysis

When the natural frequency of a structure, equipment, or component is unknown, the item may be analyzed by applying a static force at the center of mass. To account for the possibility of more than one significant dynamic mode, the static force is calculated as 1.5 times the mass times the maximum acceleration from the applicable design response spectra of the point of attachments as described in Section 3.7.2.1.9. For structures, equipment, or components which may be realistically represented by a single degree-of-freedom system, the peak spectral acceleration is used. Equivalent static load method for piping is described in Section 3.7.2.1.8.2.

3.7.3.6 Three Components of Earthquake Motion

The procedure used to consider the three components of earthquake motion for Seismic Category I subsystems is described in Section 3.7.2.6.

3.7.3.7 Procedure for Combining Modal Responses

The procedure used for combining modal responses for Seismic Category I subsystems is described in Section 3.7.2.1.5.

3.7.3.8 Analytical Procedures for Piping

A description of the modeling and analytical procedures applicable to piping systems is described in Sections 3.7.2.3.2 and 3.7.2.1.8.2, respectively.

3.7.3.9 Equipment Components Supported at Multiple Locations with Distinct Inputs

For seismic analysis of equipment and components supported at different elevations and between buildings, the envelope of response spectra, for the points of attachment, is used.

The procedure for considering differential seismic movement effects on equipment/system with interconnected components, supported at different floors of the same structure, or supported by different structures, is as follows:

a. Relative (differential) displacements between different floors of a structure and between different structures during a seismic event are obtained from the dynamic analysis of the structures, and

b. Maximum relative (differential) displacements are imposed on the equipment/system being analyzed and the induced stresses determined through a static analysis.

The allowable stress criteria are defined in Sections 3.8, 3.9, and 3.10.

3.7.3.10 Use of Constant Vertical Static Factors

The use of constant vertical static factors, as applied to Seismic Category I subsystems, is limited, as discussed in Section 3.7.2.10.

3.7.3.11 Torsional Effects of Eccentric Masses

Torsional effects of eccentric masses are discussed in Section 3.7.2.3.2. When the torsional effect of an eccentric mass is likely to have a significant effect on the result of an analysis, the eccentric mass is included in the analytical mode. If the pipe stresses due to an eccentric mass are expected to be insignificant, the offset moment due to the eccentric mass is usually neglected.

3.7.3.12 Buried Seismic Category I Piping Systems and Tunnels

Seismic Category I piping penetrating exterior building foundation walls are furnished with oversized wall sleeves and flexible closure boots.

No buried Seismic Category I tunnels are utilized in this facility.

Underground nuclear safety related piping is designed to safely resist operating loads and loads due to accident conditions which include seismic waves passing through the soil media supporting these elements and relative seismic displacements between building and surrounding soil. Analysis of these underground pipes subject to ground motion is based on their configuration and boundary conditions and the elastic properties of the soil and piping.

For the stress analysis of the portions of the buried pipes penetrating the wall sleeves and connected to the buildings, the relative displacement between the building and soil is imposed on the buried pipe in addition to the pipe internal pressure, pipe dead weight, and seismic and thermal effects on the pipe. When the piping is enclosed in encapsulated sleeves, the supports inside the encapsulated sleeves are also modeled in the analysis of the piping system.

3.7.3.12.1 Procedures for Predicting the Stresses of Buried Pipes in the Free Field

3.7.3.12.1.1 Method of Analysis. The method of analysis developed is based on Reference 3.7-12.

3.7.3.12.1.2 Axial Stresses in Pipe. The method of analysis as suggested by N. M. Newmark in Reference 3.7-12 is used in the analysis of the axial stresses in buried pipes. The value of the maximum particle velocity, Vm, used in the analysis is calculated by following the recommendations of N. M. Newmark et al., in Reference 3.7-2.

3.7.3.12.1.3 Bending Stresses in Pipes. The method of analysis as suggested by N. M. Newmark in Reference 3.7-12 is used in the analysis of the bending stresses in buried pipes.

3.7.3.12.1.4 Buried Piping Encased in Oversized Culvert Sections. Certain portions of buried pipes are encased in oversized culverts. The encasement serves the dual purpose of providing protection against damage of piping under heavily loaded areas such as roads and of accommodating thermal expansion at changes in direction of the piping.

The encased piping does not come in contact with the soil and can thus be analyzed by the same methods used for piping in free space. The dead load, internal pressure, seismic, and thermal stresses are maintained below allowable limits.

3.7.3.12.2 Procedures for Predicting the Stresses of Buried Pipes at Connections to Various Buildings

The relative movement between the soil and buildings is accommodated by encasing the pipe for a sufficient length from the penetration to allow for elastic deformation thereby keeping stress levels below allowable limits. The encased pipe does not come in contact with the soil and can therefore be analyzed using the same methods that are used for piping in free space.

3.7.3.13 Interaction of Other Piping With Seismic Category I Piping

When non-Seismic Category I piping is attached to Seismic Category I piping, that portion of the other piping up to the nearest piping anchor or terminal point is also analyzed as Seismic Category I piping. The non-Seismic Category I piping is designed to withstand the SSE without failing in a manner that would cause the Seismic Category I piping to fail.

3.7.3.14 Seismic Analyses for Reactor Internals

The seismic analysis of the reactor is described in Section 3.7.2.3.4. A comparison of the maximum calculated seismic loads and the allowable seismic loads in the RPV and internals is given in Table 3.7-19. The damping values are given in Table 3.7-1.

3.7.3.15 Analysis Procedure for Damping

Damping values used for Seismic Category I subsystems are discussed in Section 3.7.2.15.

3.7.4 SEISMIC INSTRUMENTATION

3.7.4.1 Comparison With Regulatory Guide 1.12

The seismic instrumentation system for CGS complies with the requirements of Regulatory Guide 1.12, Revision 2.

3.7.4.2 Location and Description of Instrumentation

Triaxial strong-motion accelerographs are installed at appropriate locations to provide data on the seismic input to the free field area, containment, data on the frequency, amplitude, and phase relationship of the seismic response of the containment structure and to provide data on the seismic input to other Seismic Category I SSCs. The criteria for selection of Seismic

Category I structures, components, and equipment to be instrumented, and the location of instrumentation, is that which will enable the evaluation of the following:

a. To determine if the input design response spectra has been exceeded,

b. To determine if the calculated resultant vibratory responses used in the design of the representative Seismic Category I structures and equipment have been exceeded, and

c. The degree of applicability of the mathematical models used in the seismic analysis of the buildings and equipment.

In compliance with Regulatory Guide 1.12 Rev. 2, the seismic monitoring system at Columbia Generating Station is supported by six (6) strong motion recorders (SMR), one (1) Networked Control Center and a personal computer that provides and interface with the Networked Control Center (NCC).

The SMRs are triaxial time-history accelerographs which can operate on a stand-alone basis or be linked as part of the NCC. The accelerographs' internal sensors pickup vibration and transform into an electrical signal, which is proportional to the acceleration. The signal is compared to the trigger threshold. When the threshold is exceeded, an event is created and the data is recorded which is saved on the recorder that is equipped with a portable media drive. The media device can be removed and the data can be read with a standard personal computer (PC) independently.

The first SMR is located on the 422' elevation, which is the reactor building foundation. The second SMR is located on the 522' elevation of the reactor building. The third SMR is located on the 548' elevation of the reactor building. The SMRs located at the foundation and at elevation in the structures measure the seismic response spectra. This response spectra is used to determine the impact on plant equipment or piping in accordance with Regulatory Guide 1.167 (Ref. 6) prior to restart when the plant is shutdown due to OBE exceedance.

The free field SMR is located 1000 feet NE of the reactor building in a covered pit. The free field SMR data will be used to compare measured response to the design spectra to determine whether the OBE has been exceeded in accordance with Regulatory Guide 1.166.

Two additional SMRs are located in the Radwaste Building. The first SMR is located on the 437' elevation, which is the Radwaste Building foundation. The second SMR is located on the 487' elevation. All SMRs located in the free field, Reactor Building, and Radwaste Building are networked as part of the NCC interface and data gathering.

The NCC is a rack mounted unit that is located in the control room. The NCC connects the SMRs in a centralized location where the NCC acts as a primary control and access point for

the SMR. The NCC monitors the on-line operating status of each SMR on the network and performs common trigger and time synchronization for all connected SMRs. Additionally, when the trigger threshold has been exceeded through voting logic, the relay contacts on the NCC acts as a seismic switch to provide remote indication that a specified acceleration has been exceeded. The remote indication are notification to plant operator that the "Miminum Seismic Earthquake Exceeded." As part of the NCC, there are two power supplies with backup batteries, which provides power to the NCC and the SMRs that are connected to the network. The purpose of the batteries is to supply the NCC and SMRs with power to provide 25 minutes of system operation at any time over a 24-hour period without recharging, in combination with a battery charger in accordance with Regulatory Guide 1.12.

Note that when the NCC is connected to a PC, it performs the functions of an operator interface to interpret the collected data on each SMR, monitoring of on-line operating status of each SMR as well as configuring each of the SMR that is on the network. The computer utilizes proprietary software that is used in conjunction with the NCC to monitor, configure, gather and interpret the data from the SMRs. Interpreting the data would aid in the decision to shut down the plant in accordance with Regulatory Guide 1.166.

3.7.4.3 Control Room Operator Notification

The information, which the system makes available to the control room operator, is as described in Section 3.7.4.2.

The bases for establishing predetermined values for activating the readout of the seismic instrumentation to the control room operator are

a. To initiate the triaxial time-history recorders, at a very low level acceleration equal to 0.01g as recommended by Regulatory Guide 1.12, Rev. 2, Section 6.3, and

b. To provide immediate control room annunciation if the OBE has been exceeded.

3.7.4.4 Comparison of Measured and Predicted Responses

In accordance with Appendix A to 10 CFR 100, an orderly and sequential shutdown of the plant will be carried out according to detailed written station procedures if a seismic event with vibratory ground motion equal to or exceeding that of the OBE occurs. Prior to resuming operations, it will be demonstrated to the NRC that no functional damage has occurred to those features necessary for continued operation without undue risk to the health and safety of the public, or that the necessary repairs to those features have been completed.

As per Regulatory Guide 1.166, if the response spectrum check and the cumulative absolute velocity (CAV) check were exceeded, the OBE was exceeded and shutdown is required. If

either check does not exceed the criterion, the earthquake motion did not exceed the OBE. If only one check can be performed, the other check is assumed to be exceeded. In the event that data from the free-field instrumentation is unavailable, then the guidance of Regulatory Guide 1.166, Appendix A, will be followed.

The data from the free-field seismic instrumentation, coupled with information obtained from a plant walkdown, are used to make the initial determination for plant actions due to an earthquake. After an earthquake, a response spectrum check and the CAV will be calculated based on the recorded motions at the free-field instrument within 4 hours in accordance with Regulatory Guide 1.166 to determine if OBE was exceeded. If the OBE ground motion is exceeded or significant plant damage is identified during plant walkdowns, action will be take in accordance with Regulatory Guide 1.166 and plant procedures.

The Reactor Building and Radwaste Building foundation-level instrumentation are used for evaluation of the plant structures when the data from the free-field instrumentation is unavailable. In this case, the determination of OBE exceedance is based on a response spectrum check. A comparison is made between the foundation-level design response spectra and data obtained from the foundation-level instruments. If the response spectrum check at either foundation is exceeded, the OBE is exceeded and plant action is required for evaluation of plant operability. The CAV check is not applicable to the data recorded at the foundation-level instrumentation.

3.7.5 REFERENCES

3.7-1 Newmark, N. M., and W. J Hall, "Seismic Design Criteria for Nuclear Reactor Facilities," Proc. 4th World Conference on Earthquake Engineering, Vol. II, Santiago, Chile, pp. B5-1 to B5-12, 1969.

3.7-2 Newmark, N. M., Blume, J. A., and Kapur, K. K., Design Response Spectra for Nuclear Power Plants, American Society of Civil Engineers National Structural Engineering Meeting, San Francisco, CA, April 1973.

3.7-3 Shinozuka, M., Methods of Safety and Reliability Analysis, Technical Report No. 1, prepared for the National Science Foundation under Grant No. NSF-GF 3858, July 1969.

3.7-4 Shinozuka, M. "Simulation of Multivariate and Multi-Dimensional Random Processes," Journal of the Acoustical Society of America, Vol. 49, No. 1 (Part 2), pp 357-367, January 1971.

3.7-5 Richart, Jr., F. E., Hall, Jr., J. R., and Woods, R. D., Vibrations of Soils and Foundations, Prentice-Hall Inc., New Jersey, 1970.

3.7-6 E. D'Appolonia Consulting Engineers, Inc. Letter Report, Soil-Structure Interaction, Washington Public Power Supply System, Hanford No. 2 Nuclear Station, Richland, Washington, dated August 1972.

3.7-7 Nigam, N. C. and Jennings, P. C., "Digital Calculation of Response Spectra from Strong Motion Earthquake Records," Earthquake Engineering Research Laboratory, California Institute of Technology, Pasadena, CA, July 1969.

3.7-8 Institute of Electrical and Electronic Engineers (IEEE) Standard 344, "Guide for Seismic Qualification of Class 1 Electric Equipment for Nuclear Power Generating Stations."

3.7-9 ICBO, "Uniform Building Code" International Conference of Building Officials, Whittier, CA, 1970.

3.7-10 "BWR/6 General Electric Standard Safety Analysis Report" (Gessar), Vol. 1, General Electric Company, San Jose, CA, April 30, 1974.

3.7-11 Liu, L. K., "Seismic Analysis of the Boiling Water Reactor," Symposium on Seismic Analysis of Pressure Vessel and Piping Components, First National Congress on Pressure Vessel and Piping, San Francisco, CA, May 1971.

3.7-12 Newmark, N. M., "Earthquake Response Analysis of Reactor Structures," First International Conference on Structural Mechanics, Berlin, September 1971.

3.7-13 Letter from G. W. Knighton, NRC, to G. C. Sorensen, Supply System, Subject: Use of ASME Code Case N-411 in Piping Design at WNP-2 (TAC No. 64595) dated June 3, 1987.

3.7-14 Whitman, R. V., "Soil-Structure Interaction," Seismic Design of Nuclear Power Plants, R. J. Hansen, editor, the M.I.T. Press, Cambridge, Massachusetts, and London, England, 1970, pp. 245-269.

3.7-15 Nuclear Regulatory Commission, Standard Review Plan, NUREG-75/087.

Table 3.7-1

Damping Coefficients[a]
(% of critical damping)

Structure or Component[b]	Operating Basis Earthquake	Safe Shutdown Earthquake
Welded steel plate assemblies	1.0	1.0
Welded steel frame structures	2.0	2.0
Bolted or riveted steel frame structures	2.5	2.5
Reinforced-concrete equipment supports	2.0	3.0
Reinforced-concrete structures	3.0	5.0
Vital piping[c]	0.5	1.0
Equipment[c]	1.0	2.0
Welded structural assemblies (equipment and supports)	1.0	2.0
Bolted or riveted structural assemblies	2.0	3.0
Reactor pressure vessel, support skirt, shroud head, separator, and guide tubes	2.0	2.0
Control rod drive housings	3.5	3.5
Fuel	7.0	7.0
Steel frame structures	2.0	3.0
Soil		
Rocking	5	7
Translation (horizontal and vertical)	10	10

[a] The tabulated damping values are used in the seismic analysis in conjunction with the ground response spectra shown in Figure 3.7-1, for the design of all Seismic Category I structures, systems, and components. The original Annulus Pressurization analysis used 3% for all locations except the main steam at RPV nozzle with a 2% damping ratio. The damping ratio for MELLLA is 4% as specified in R.G. 1.61 Rev. 1.

[b] For structures or components, combined stresses are considered below one-half yield for loading combinations including the OBE, and at or near yield for loading combinations including the SSE.

[c] In the event these damping values are found to be too restrictive, the higher damping coefficients cited by Regulatory Guide 1.61 Rev.1 (i.e., 1.0 and 2.0% of critical damping for OBE and SSE events, respectively) may be used.

NOTE: See also Section 3.7.2.15 for the ASME Code Case N-411 damping application to CGS piping systems.

Table 3.7-2

Foundation/Supporting Media for
Seismic Category I Structures

Structure	Average Foundation Embedment Depth (ft)	Width of Structural Foundation (ft)	Total Structural Height (ft)
Reactor building	21.5	147	265
Control room structure and portions of radwaste buildings[a]	15.5	163.5	120
Diesel generator building	4	79.5	40
Standby service water pump houses	12.4	37.5	62
Spray ponds	21	250	16
Turbine generator building[b]	11	192.5	159

[a] See Section 3.8.4.1.2 for a description of the portions of the radwaste and control building designed as Seismic Category I.

[b] The turbine generator building, classified as a modified non-Category I seismic structure, is dynamically analyzed and designed to withstand the effects of an SSE and maintain its structural integrity.

Table 3.7-3

Reactor Building - Seismic Analysis
Natural Frequency and Natural Period

Direction	Mode	Natural Frequency (cps)	Natural Period (sec/cycle)
Horizontal (N-S)	1	1.92	0.519
	2	3.42	0.292
	3	5.17	0.193
	4	5.88	0.170
	5	7.52	0.133
	6	10.37	0.096
	7	11.41	0.087
	8	12.54	0.079
	9	16.82	0.059
	10	18.80	0.053
Vertical	1	4.14	0.241
	2	10.27	0.097
	3	12.92	0.077
	4	19.29	0.051
	5	20.31	0.049
	6	23.37	0.042
	7	33.01	0.030
	8	37.89	0.026
	9	46.03	0.021
	10	49.22	0.020

Table 3.7-4

Reactor Building - Seismic Analysis
Horizontal N-S Direction - OBE
Acceleration (units in g x 10^{-3})

	Mode Numbers										
Mass	1	2	3	4	5	6	7	8	9	10	Combined
1	681.65	770.36	147.14	10.00	0.58	1.13	0.61	1.74	0.02	0.05	1039.16
2	381.23	31.44	125.22	20.83	0.27	8.00	3.57	7.52	0.04	1.17	403.27
3	311.30	33.80	48.44	17.61	1.47	2.66	0.82	9.37	0.28	0.80	317.52
4	271.37	33.00	7.52	19.32	1.55	0.72	2.53	13.08	0.05	0.52	274.60
5	221.50	30.71	40.51	20.00	1.67	3.67	3.50	12.55	0.25	1.65	228.73
6	183.68	28.22	73.45	19.74	1.83	4.47	3.37	9.64	0.34	1.69	201.27
7	129.38	23.39	113.05	17.94	1.75	4.11	1.77	0.10	0.34	0.82	174.39
8	85.95	18.88	138.24	16.06	1.90	1.99	0.02	6.50	0.17	0.11	164.81
9	72.55	17.31	143.54	16.33	2.32	1.07	0.36	8.04	0.16	0.32	162.82
10	47.00	14.54	154.99	16.79	3.42	1.28	0.77	7.82	0.26	0.36	163.74
11	341.16	42.95	28.76	93.74	18.49	2.62	4.47	1.25	3.50	0.70	358.11
12	313.88	40.95	0.74	90.19	11.74	1.76	1.99	2.85	2.88	0.37	329.40
13	292.73	40.55	31.89	97.67	0.48	0.58	1.92	6.33	3.41	0.16	313.00
14	260.70	39.43	75.68	104.35	15.19	3.20	6.65	10.40	3.87	0.11	294.42
15	241.40	38.53	99.51	106.24	22.43	4.37	8.90	12.19	3.91	0.25	286.24
16	224.77	37.64	118.86	106.90	27.87	5.17	10.56	13.45	3.86	0.35	280.87
17	208.53	36.66	136.32	106.43	32.23	5.71	11.84	14.32	3.71	0.43	276.60
18	186.76	35.14	157.25	103.90	36.49	6.04	12.94	14.93	3.32	0.50	271.64
19	173.59	33.14	156.95	88.30	32.21	5.92	11.62	11.87	3.02	0.44	255.53
20	149.95	29.38	154.29	58.35	23.39	5.54	8.83	5.97	2.39	0.30	226.63
21	127.28	25.76	151.35	30.11	14.54	4.90	5.98	0.42	1.73	0.15	202.37
22	105.96	22.43	149.21	5.25	6.29	4.01	3.34	4.29	1.11	0.02	184.76
23	85.96	18.89	138.31	16.02	1.89	1.99	0.01	6.49	0.17	0.11	164.87
24	335.59	54.35	52.65	306.06	67.38	6.67	14.08	22.48	5.22	0.64	466.87
25	315.53	53.71	96.44	303.01	18.08	11.29	18.00	23.07	0.51	0.04	453.55
26	280.67	51.17	151.19	278.75	38.20	10.97	11.67	8.09	8.49	1.05	428.95
27	256.78	47.92	167.09	240.87	52.47	5.69	1.24	6.58	8.70	0.92	396.35
28	229.46	43.19	168.96	186.09	50.12	2.14	11.20	20.54	4.75	0.27	348.20
29	214.61	40.41	166.36	158.04	46.70	3.63	12.24	19.28	1.84	0.03	321.78
30	186.92	35.25	158.31	105.27	37.09	6.05	13.10	15.13	3.32	0.51	273.03
31	167.90	32.05	155.85	76.90	31.52	6.80	12.65	11.50	5.40	0.64	247.13
32	140.09	27.37	150.40	39.33	21.61	6.73	10.20	4.74	6.26	0.55	212.88
33	114.61	23.24	145.32	10.61	11.72	5.55	6.73	1.69	5.07	0.25	187.53
34	91.85	19.81	142.38	8.37	3.22	3.53	3.11	6.45	2.56	0.10	171.15
35	72.56	17.32	143.55	16.33	2.31	1.07	0.37	8.04	0.16	0.32	162.84

Table 3.7-5

Reactor Building - Seismic Analysis
Horizontal N-S Direction - OBE
Displacement (units in ft x 10^{-4})

	Mode Numbers										
Mass	1	2	3	4	5	6	7	8	9	10	Combined
1	1502.05	-536.45	44.83	-2.36	0.08	-0.09	-0.04	-0.09	0.0	0.0	1595.60
2	840.07	21.90	-38.15	4.91	-0.04	0.61	0.22	0.39	0.0	0.03	841.24
3	685.97	23.54	-14.76	4.15	0.21	0.20	-0.05	-0.49	-0.01	0.02	686.54
4	597.97	22.98	-2.29	4.56	0.22	-0.05	-0.16	-0.68	0.0	-0.01	598.44
5	488.09	21.39	12.34	4.72	0.24	-0.28	-0.22	-0.65	0.01	-0.04	488.74
6	404.75	19.65	22.38	4.65	0.26	-0.34	-0.21	-0.50	0.01	-0.04	405.87
7	285.11	16.29	34.44	4.23	0.25	-0.31	-0.11	-0.01	0.01	-0.02	287.68
8	189.39	13.15	42.12	3.79	0.27	-0.15	0.0	0.34	0.0	0.0	194.50
9	159.88	12.06	43.73	3.85	0.34	-0.08	0.02	0.42	0.0	0.01	166.24
10	103.58	10.12	47.22	3.96	0.49	0.10	0.05	0.41	0.01	0.01	114.36
11	751.76	29.91	-8.76	-22.11	2.67	0.20	-0.28	-0.06	-0.01	0.02	752.74
12	691.65	28.51	-0.22	-21.27	1.70	0.13	-0.12	-0.15	-0.08	0.01	692.57
13	645.04	28.24	9.72	-23.03	-0.07	-0.04	0.12	-0.33	-0.10	0.0	646.14
14	574.46	27.46	23.06	-24.61	-2.19	-0.24	0.42	-0.54	-0.11	0.0	576.11
15	531.94	26.83	30.32	-25.05	-3.24	-0.33	0.56	-0.63	-0.11	-0.01	534.08
16	495.28	26.21	36.22	-25.21	-4.02	-0.39	0.66	-0.70	-0.11	-0.01	497.95
17	459.51	25.53	41.54	-25.10	-4.65	-0.43	0.74	-0.74	-0.11	-0.01	462.80
18	411.53	24.47	47.91	-24.50	-5.27	-0.46	0.81	-0.77	-0.10	-0.01	415.79
19	382.52	23.08	47.82	-20.82	-4.65	-0.45	0.73	-0.62	-0.09	-0.01	386.78
20	330.42	20.46	47.01	-13.76	-3.38	-0.42	0.55	-0.31	-0.07	-0.01	334.68
21	280.47	17.94	46.11	-7.10	-2.10	-0.37	0.37	-0.02	-0.05	0.0	284.90
22	233.48	15.62	45.46	-1.24	-0.91	-0.30	0.21	0.22	-0.03	0.0	238.38
23	189.42	13.15	42.14	3.78	0.27	-0.15	0.0	0.34	0.0	0.0	194.53
24	739.49	37.84	16.04	-72.17	9.73	0.15	-0.88	1.17	-0.15	-0.01	744.21
25	695.29	37.40	29.38	-71.45	2.61	0.86	-1.13	1.20	-0.01	0.0	700.58
26	618.47	35.64	46.06	-65.73	-5.52	0.83	-0.73	0.42	0.24	0.02	624.70
27	565.83	33.37	50.91	-56.80	-7.58	0.43	-0.08	-0.34	0.25	0.02	571.97
28	505.62	30.08	51.48	-43.88	-7.24	-0.16	0.70	-1.07	0.14	0.01	511.07
29	472.90	28.18	50.69	-37.27	-6.74	-0.28	0.76	-1.00	0.05	0.0	477.95
30	411.88	24.55	48.23	-24.82	-5.36	-0.46	0.82	-0.79	-0.10	-0.01	416.20
31	369.98	22.32	47.48	-18.13	-4.55	-0.52	0.79	-0.60	-016	-0.01	374.15
32	308.70	19.06	45.83	-9.27	-3.12	-0.51	0.64	-0.25	-0.18	-0.01	312.82
33	252.55	16.18	44.28	-2.50	-1.69	-0.42	0.42	0.09	-0.15	-0.01	256.93
34	202.40	13.80	43.38	1.97	-0.46	-0.27	0.19	0.33	-0.07	0.0	207.47
35	159.89	12.06	43.74	3.85	0.33	-0.08	0.02	0.42	0.00	0.01	166.25

Table 3.7-6

Reactor Building - Seismic Analysis
Horizontal N-S Direction - OBE
Member Shears (units in kips)

	Mode Number										
Member	1	2	3	4	5	6	7	8	9	10	Combined
1	1778.0	-2009.4	383.8	-26.1	-1.6	-2.9	-1.6	-4.5	0.0	0.1	2710.5
2	11509.0	-1207.3	-2810.3	505.3	-5.3	201.2	89.4	187.1	1.0	30.0	11924.0
3	20658.0	27.1	-3380.6	-400.9	117.5	272.8	62.0	-60.0	-11.2	52.1	20939.0
4	25430.0	607.2	-3512.9	-61.1	144.7	260.3	17.6	-290.1	-12.0	43.0	25682.0
5	29256.0	1137.6	-2814.5	284.1	173.5	196.9	-42.9	-506.6	-7.8	14.6	29421.0
6	32468.0	1631.7	-1527.9	628.9	205.5	118.6	-102.0	-675.6	-1.8	-15.0	32461.0
7	35151.0	2116.5	821.4	1002.5	241.7	33.2	-138.8	-673.5	5.2	-32.0	35248.0
8	39200.0	2760.0	4264.8	126.2	15.3	-9.3	-88.7	-622.9	-1.0	-31.5	39535.0
9	42109.0	3325.2	8593.9	419.2	-52.9	-58.7	-39.8	-441.4	-17.4	-25.0	43110.0
10	45884.0	4484.0	20920.0	1753.8	218.5	43.1	21.4	179.6	3.3	3.7	50658.0
11	72.0	9.0	-6.0	-19.6	3.9	0.5	-0.9	-0.3	-0.7	0.1	75.5
12	915.4	-42.7	-429.3	183.7	110.9	13.3	-14.9	11.4	1.5	0.2	1034.9
13	935.0	-39.8	-426.9	176.7	110.9	13.2	-14.7	11.0	1.2	0.2	1049.9
14	987.4	-32.2	-412.6	156.9	108.0	12.6	-13.5	9.0	0.5	0.2	1087.7
15	1003.5	-29.3	-405.0	148.7	106.3	12.3	-12.8	8.1	0.2	0.2	1098.1
16	1031.5	-24.7	-390.3	135.3	102.8	11.6	-11.5	6.4	-0.3	0.1	1116.4
17	1081.3	-16.0	-358.0	110.5	95.2	10.3	-8.7	3.0	-1.2	0.0	1148.6
18	2357.1	264.8	796.3	-1041.1	-211.3	6.1	30.4	-55.0	-2.1	-0.7	2719.6
19	2380.2	269.2	817.5	-1053.1	-215.8	5.3	32.0	-56.6	-2.6	-0.8	2751.3
20	2405.4	274.5	845.6	-1063.7	-220.1	4.2	33.6	-57.7	-3.0	-0.8	2786.6
21	2428.1	279.0	872.7	-1069.2	-222.7	3.4	34.7	-57.8	-3.3	-0.9	2817.2
22	2925.0	384.6	1574.3	-1093.9	-252.3	-15.5	50.4	-37.6	-8.5	-1.0	3528.4
23	241.7	-76.2	-242.9	390.3	-11.7	8.7	-19.1	28.1	-12.1	-1.1	527.4
24	56.8	-44.7	-186.4	212.8	-1.1	15.3	-29.7	41.6	-12.4	-1.2	301.2
25	236.4	-8.9	-28.2	-79.0	-41.1	26.8	-41.9	50.1	-3.5	-0.1	271.8
26	374.8	34.4	60.7	-207.0	-69.0	29.9	-42.5	46.6	1.1	0.4	449.2
27	817.9	120.1	395.4	-575.8	-168.3	25.6	-20.4	5.9	10.5	1.0	1095.9
28	1033.6	157.7	550.6	-723.2	-211.9	22.2	-8.9	-12.1	12.3	1.0	1401.9
29	493.9	17.7	28.4	8.3	-53.1	2.3	4.2	-14.4	0.0	-0.3	498.3
30	718.0	59.1	228.5	-90.4	-93.7	-6.5	20.5	-29.2	-7.0	-1.1	768.6
31	833.8	81.8	354.2	-123.3	-111.7	-12.1	29.0	-33.2	-12.2	-1.6	926.9
32	940.1	103.3	488.4	-133.1	-122.5	-17.2	35.2	-31.6	-16.8	-1.8	1082.0
33	1075.2	132.0	693.5	-121.1	-127.1	-22.3	39.7	-22.3	-20.5	-1.7	1300.0
34	314.3	-275.1	-803.8	1405.7	-82.4	3.8	4.1	-18.7	4.1	0.6	1674.4
35	-1119.5	-218.3	-380.7	1191.1	-188.0	-8.7	17.7	-30.8	1.6	0.5	1703.6
36	-3776.0	-415.0	1859.0	1043.3	247.6	22.8	-50.5	15.5	8.0	0.7	4362.9
37	-995.0	-151.0	-450.0	119.2	127.0	23.2	-40.4	12.0	20.4	1.3	1117.7
38	-1225.0	-275.8	-1122.2	1132.0	300.4	2.9	-36.5	54.8	0.3	0.7	2053.3

Table 3.7-7

Reactor Building - Seismic Analysis
Horizontal N-S Direction - OBE
Member Moments (units in ft-kips x 10^3)

	Mode Number							
	1		2		3		4	
Member	Top	Bottom	Top	Bottom	Top	Bottom	Top	Bottom
1	8.51	-92.52	-0.03	94.97	-9.02	-9.11	-0.1	1.25
2	146.58	-589.63	-95.16	141.64	-46.11	154.31	-1.32	-18.13
3	635.28	-1056.16	-140.82	140.27	-200.22	269.10	17.85	-9.68
4	1100.61	-1761.78	-138.92	123.13	-312.27	403.60	9.25	-7.66
5	1806.29	-2420.64	-121.11	97.22	-445.67	504.77	7.08	-13.05
6	2468.16	-3442.18	-94.44	45.49	-547.79	593.62	12.29	-31.19
7	3493.30	-4442.34	-41.67	-15.48	-638.79	616.56	29.85	-56.92
8	4690.34	-5032.50	33.19	-57.29	-615.24	578.02	3.70	-4.80
9	5157.28	-6000.32	68.62	-135.20	-583.26	411.20	-20.21	11.82
10	6382.04	6382.04	166.90	-166.90	-727.50	727.50	-27.03	27.03
11	0.03	-1.16	0.0	-0.14	-0.05	0.14	0.0	0.31
12	1.18	-10.19	0.15	0.27	-0.19	4.42	-0.31	-1.50
13	10.33	-25.52	-0.27	0.92	-4.46	11.39	1.49	-4.36
14	25.44	-35.56	-0.91	1.24	-11.52	15.75	4.35	-5.96
15	35.77	-44.90	-1.23	1.50	-15.80	19.48	5.94	-7.30
16	45.20	-54.66	-1.49	1.71	-19.57	23.14	7.27	-8.51
17	54.67	-68.45	-1.70	1.90	-23.35	27.91	8.45	-9.86
18	68.62	-85.18	-1.88	0.02	-28.12	22.52	9.78	-2.46
19	85.49	-115.57	0.0	-3.40	-22.62	12.28	2.40	10.91
20	115.86	-146.32	3.43	-6.90	-12.43	1.73	-10.99	24.46
21	146.30	-177.07	6.92	-10.46	-1.86	-9.20	-24.50	38.05
22	182.61	-217.71	10.93	-15.54	5.31	-24.20	-39.03	52.15
23	2.48	-0.09	0.24	0.51	-4.01	6.41	-3.03	-0.82
24	0.21	0.71	-0.50	1.22	-6.58	9.61	0.67	-4.13
25	-0.48	-1.94	-1.19	1.10	-9.81	10.10	3.82	-3.01
26	2.06	-6.36	-1.08	0.69	-10.14	9.45	2.83	-0.46
27	7.88	-13.45	-0.44	-0.38	-9.40	6.71	-2.03	5.95
28	13.52	-26.70	0.40	-2.41	-6.70	-0.32	-6.22	15.44
29	27.31	-31.90	2.51	-2.68	0.39	-0.66	-16.41	16.33
30	32.13	-42.32	2.71	-3.55	0.68	-3.92	-16.63	17.91
31	42.42	-54.16	3.57	-4.72	3.94	-8.93	-18.06	19.80
32	54.31	-67.56	4.74	-6.20	8.93	-15.81	-19.91	21.79
33	67.70	-82.82	6.22	-8.07	15.77	-25.52	-21.88	23.58
34	0.0	0.0	0.0	0.0	0.0	0.0	0.0	0.0
35	0.0	0.0	0.0	0.0	0.0	0.0	0.0	0.0
36	-214.67	214.67	-15.63	15.63	-19.68	19.68	52.36	52.36
37	-62.40	62.40	-7.84	7.84	-25.49	25.49	23.63	23.63
38	0.0	0.0	0.0	0.0	0.0	0.0	0.0	0.0

Table 3.7-7

Reactor Building - Seismic Analysis
Horizontal N-S Direction - OBE
Member Moments (units in ft-kips x 10^3) (Continued)

	Mode Number							
	5		6		7		8	
Member	Top	Bottom	Top	Bottom	Top	Bottom	Top	Bottom
1	-0.26	0.18	0.23	-0.09	0.43	-0.35	2.42	-2.21
2	-1.65	1.85	1.26	-9.00	2.40	-5.84	12.95	-20.15
3	-3.05	0.66	9.62	-15.18	7.23	-8.50	27.62	-26.40
4	-1.81	-1.96	15.34	-22.11	9.52	-9.98	32.32	-24.77
5	0.73	-4.38	21.48	-25.62	10.57	-9.67	29.30	-18.66
6	2.95	-9.12	24.05	27.61	9.89	-6.83	22.46	-2.20
7	7.18	-13.71	24.23	-25.12	6.52	-2.78	5.87	12.31
8	6.53	-6.66	23.10	-23.02	3.69	-2.91	-12.32	17.76
9	-0.67	1.72	19.21	-18.04	3.62	-2.82	-15.92	24.76
10	-20.57	20.57	-24.29	24.29	-2.54	2.54	15.97	-15.97
11	0.01	-0.07	0.0	-0.01	0.0	0.02	0.0	0.0
12	0.08	-1.18	0.01	-0.41	-0.02	0.17	0.0	-0.11
13	1.18	-2.98	0.14	-0.36	-0.17	0.41	0.12	-0.29
14	3.00	-4.11	0.36	-0.49	-0.42	0.56	0.30	-0.39
15	4.12	-5.09	0.49	-0.60	-0.56	0.67	0.40	-0.47
16	5.09	-6.04	0.60	-0.70	-0.68	0.78	0.47	-0.53
17	6.05	-7.26	0.70	-0.83	-0.79	0.90	0.53	-0.57
18	7.26	-5.78	0.82	-0.87	-0.90	0.69	0.57	-0.19
19	5.77	-3.04	0.8	-0.93	-0.69	0.28	0.19	0.53
20	3.03	-0.24	0.91	-0.97	-0.28	-0.14	-0.53	1.26
21	0.23	2.59	0.96	-1.00	0.15	-0.59	-1.26	1.99
22	-2.93	5.96	0.59	-0.41	0.59	-1.20	1.75	2.20
23	6.45	-6.33	-0.88	0.79	1.20	-1.01	-1.25	0.98
24	6.59	-6.57	-0.82	0.57	1.05	-0.57	-1.00	0.33
25	6.82	-6.40	-0.58	0.30	0.57	-0.14	-0.32	-0.19
26	6.46	-5.67	-0.30	-0.04	0.13	0.36	0.19	-0.73
27	5.53	-4.38	0.15	-0.33	-0.43	0.57	0.60	-0.64
28	4.36	-1.66	0.34	-0.62	-0.57	0.69	0.62	-0.47
29	1.51	-1.02	0.65	-0.67	-0.69	0.65	0.38	-0.24
30	0.96	0.37	0.67	-0.58	-0.64	0.35	0.21	0.21
31	-0.40	1.97	0.58	-0.41	-0.40	-0.07	-0.23	0.70
32	-2.01	3.74	0.41	-0.16	0.08	-0.58	-0.72	1.16
33	-3.77	5.56	0.15	0.16	0.59	-1.15	-1.17	1.49
34	0.0	0.0	0.0	0.0	0.0	0.0	0.0	0.0
35	0.0	0.0	0.0	0.0	0.0	0.0	0.0	0.0
36	6.11	-6.11	-0.09	0.09	-1.17	1.17	1.19	-1.90
37	5.57	-5.57	0.18	-0.18	-1.14	1.14	1.47	-1.47
38	0.0	0.0	0.0	0.0	0.0	0.0	0.0	0.0

Table 3.7-7

Reactor Building - Seismic Analysis
Horizontal N-S Direction - OBE
Member Moments (units in ft-kips x 10^3) (Continued)

	Mode number					
	9		10		Combined	
Member	Top	Bottom	Top	Bottom	Top	Bottom
1	0.10	-0.10	-0.96	0.95	12.73	132.93
2	0.38	-0.42	-2.77	1.61	181.40	626.60
3	0.58	-0.35	-2.64	1.58	682.01	1099.59
4	0.47	-0.15	-2.34	1.22	1153.35	1812.09
5	0.24	-0.08	-1.79	1.48	1864.96	2474.95
6	0.17	-0.11	-1.91	2.36	2530.33	3493.56
7	0.20	-0.34	-2.50	3.36	3551.69	4485.42
8	0.12	-0.11	-3.27	3.54	4730.71	5066.00
9	-0.17	0.52	-3.34	3.84	5190.72	6016.01
10	0.14	-0.14	0.81	-0.81	6425.70	6425.70
11	0.0	0.01	0.0	0.0	0.06	1.22
12	-0.01	0.0	0.0	0.0	1.24	11.28
13	0.0	-0.02	0.01	-0.01	11.41	28.47
14	0.02	-0.03	0.01	-0.01	28.45	39.60
15	0.03	-0.03	0.01	-0.01	39.80	49.78
16	0.03	-0.02	0.01	-0.01	50.09	60.31
17	0.02	-0.01	0.02	-0.02	60.39	74.98
18	0.01	0.01	0.02	-0.01	75.19	88.34
19	-0.01	0.0	0.01	0.0	88.66	116.83
20	-0.05	0.08	0.0	0.01	117.14	148.53
21	-0.08	0.13	-0.01	0.02	148.52	181.69
22	-0.15	0.25	0.0	0.01	187.16	225.81
23	0.19	-0.07	0.02	-0.01	8.94	9.31
24	0.08	0.12	0.01	0.01	9.61	12.48
25	-0.12	0.15	-0.01	0.01	12.65	12.54
26	-0.14	0.13	-0.01	0.01	12.58	12.80
27	0.12	-0.19	0.02	-0.03	13.66	16.81
28	0.22	-0.37	0.03	-0.04	16.95	31.02
29	0.45	-0.45	0.05	-0.04	32.02	35.98
30	0.47	-0.37	0.04	-0.03	36.32	46.27
31	0.38	-0.21	0.03	-0.01	46.42	59.59
32	0.20	0.03	0.01	0.02	58.76	73.10
33	-0.04	0.33	-0.02	0.04	73.26	90.39
34	0.0	0.0	0.0	0.0	0.0	0.0
35	0.0	0.0	0.0	0.0	0.0	0.0
36	0.25	-0.25	0.0	0.0	225.50	225.50
37	0.33	-0.33	0.04	-0.04	72.12	72.12
38	0.0	0.0	0.0	0.0	0.0	0.0

Table 3.7-8

Reactor Building - Seismic Analysis
Horizontal N-S Direction - SSE
Acceleration (units in g x 10^{-3})

	Mode Number										
Mass	1	2	3	4	5	6	7	8	9	10	Combine
1	1171.05	-1177.02	276.94	-15.31	0.87	-1.74	-0.92	-2.67	-0.03	0.07	1683.35
2	654.94	48.04	-235.69	31.90	-0.40	12.34	5.36	11.52	0.06	1.81	698.76
3	534.80	51.65	-91.18	26.96	2.15	4.10	-1.23	-14.37	-0.43	1.24	545.88
4	466.20	50.43	-14.14	29.59	2.33	-1.10	-3.80	-20.06	-0.07	-0.80	470.67
5	380.53	46.92	76.24	30.63	2.51	-5.66	-5.26	-19.23	0.37	-2.55	392.93
6	315.55	43.12	138.21	30.23	2.76	-6.89	-5.07	-14.78	0.52	-2.61	349.14
7	222.28	35.73	212.77	27.47	2.63	-6.34	-2.67	0.15	0.51	-1.26	311.07
8	147.65	28.85	260.19	24.60	2.87	-3.06	-0.03	9.96	0.25	0.16	301.76
9	124.64	26.45	270.16	25.01	3.51	-1.65	0.54	12.32	0.24	0.50	300.05
10	80.75	22.21	291.72	25.71	5.15	1.97	1.16	11.98	0.39	0.56	304.92
11	586.10	65.63	-54.12	-143.56	27.90	4.05	-6.72	1.91	-5.25	1.08	610.12
12	539.23	62.56	-1.39	-138.12	17.72	2.71	-2.99	-4.37	-4.32	0.57	560.50
13	502.89	61.95	60.02	-149.57	-0.73	-0.90	2.89	-9.70	-5.11	0.25	531.88
14	447.87	60.25	142.44	-159.81	-22.93	-4.93	9.99	-15.94	-5.81	-0.17	501.30
15	414.72	58.86	187.30	-162.70	-33.85	-6.73	13.38	-18.69	-5.87	-0.38	489.14
16	386.14	57.51	223.71	-163.71	-42.05	-7.97	15.87	-20.61	-5.79	-0.54	482.14
17	358.25	56.01	256.57	-162.99	-48.64	-8.81	17.79	-21.95	-5.57	-0.67	477.42
18	320.84	53.69	295.97	-159.12	-55.07	-9.31	19.44	-22.74	-4.98	-0.77	472.93
19	298.22	50.63	295.40	-135.23	-48.61	-9.13	17.46	-18.19	-4.53	-0.67	448.09
20	257.60	44.89	290.39	-89.37	-35.30	-8.55	13.26	-9.15	-3.59	-0.46	403.14
21	218.66	39.36	284.85	-46.11	-21.94	-7.56	8.99	-0.65	-2.60	-0.23	365.06
22	182.03	34.27	280.84	-8.04	-9.49	-6.18	5.01	6.57	-1.66	-0.04	336.91
23	147.68	28.86	260.31	24.53	2.85	-3.07	-0.02	9.95	0.25	0.16	301.86
24	576.53	83.03	99.10	-468.71	101.66	10.28	-21.16	34.47	-7.83	-1.00	763.14
25	542.07	82.06	181.51	-464.05	27.28	17.41	-27.05	35.37	-0.76	-0.07	744.18
26	482.18	78.19	284.55	-426.89	-57.65	16.91	-17.53	12.40	12.74	1.62	711.68
27	441.14	73.22	314.49	-368.87	-79.17	8.77	-1.87	-10.08	13.06	1.42	664.52
28	394.20	65.99	318.01	-284.98	-75.63	-3.30	16.83	-31.49	7.13	0.42	591.78
29	368.69	61.84	313.11	-242.03	-70.47	-5.60	18.40	-29.56	2.76	-0.04	551.07
30	321.12	53.86	297.95	-161.22	-55.96	-9.33	19.69	-23.20	-4.98	-0.78	475.25
31	288.45	48.96	293.32	-117.77	-47.57	-10.49	19.01	-17.62	-8.10	-0.99	435.07
32	240.68	41.82	283.08	-60.23	-32.60	-10.38	15.33	-7.27	-9.40	-0.85	381.06
33	196.89	35.51	273.50	-16.25	-17.68	-8.55	10.11	2.60	-7.60	-0.39	340.15
34	157.80	30.27	267.98	12.82	-4.86	-5.44	4.67	9.88	-3.85	0.15	313.17
35	124.65	26.46	270.19	25.01	-3.49	-1.66	0.55	12.32	0.23	0.50	300.07

Table 3.7-9

Reactor Building - Seismic Analysis
Horizontal N-S Direction - SSE
Displacement (units in ft x 10^{-4})

	Mode Number										
Mass	1	2	3	4	5	6	7	8	9	10	Combined
1	2580.46	-819.63	84.38	-3.16	0.13	-0.13	-0.06	-0.14	0.0	0.0	2708.4
2	1443.20	33.46	-71.81	7.52	-0.06	0.94	0.36	0.60	0.0	0.04	1445.2
3	1178.46	35.97	-27.78	6.36	0.31	0.31	-0.08	-0.75	-0.01	0.03	1178.9
4	1027.29	35.11	-4.31	6.98	0.34	-0.08	-0.24	-1.04	0.0	-0.02	1027.6
5	838.50	32.67	23.23	7.22	0.36	-0.43	-0.33	-1.00	0.01	-0.06	839.5
6	695.34	30.03	42.11	7.13	0.40	-0.52	-0.32	-0.77	0.01	-0.06	697.3
7	489.79	24.88	64.83	6.48	0.38	-0.48	-0.17	0.01	0.01	-0.03	494.7
8	325.35	20.09	79.28	5.80	0.41	-0.23	0.0	0.52	0.01	0.0	335.6
9	274.66	18.42	82.31	5.90	0.50	-0.13	0.03	0.64	0.01	0.01	287.4
10	177.94	15.47	88.88	6.06	0.74	0.15	0.07	0.62	0.01	0.01	199.6
11	1291.49	45.70	-16.49	-33.85	4.03	0.31	-0.42	-0.10	-0.15	0.02	1292.4
12	1188.23	43.57	-0.42	-32.57	2.56	0.21	-0.19	-0.23	-0.12	0.01	1189.2
13	1108.15	43.14	18.29	-35.27	-0.11	-0.07	0.18	-0.50	-0.15	0.01	1109.6
14	986.90	41.95	43.40	-37.68	-3.11	-0.37	0.63	-0.83	-0.17	0.0	989.5
15	913.86	40.99	57.07	-38.36	-4.89	-0.51	0.84	-0.97	-0.17	-0.01	917.4
16	850.87	40.05	68.16	38.60	-6.07	-0.60	0.99	-1.07	-0.17	-0.01	855.4
17	789.41	39.01	78.17	-38.43	-7.02	-0.67	1.11	-1.14	-0.16	-0.02	795.2
18	706.99	37.39	90.18	-37.52	-7.95	-0.71	1.22	1.18	-0.14	-0.02	714.7
19	657.15	35.26	90.00	-31.89	-7.02	-0.69	1.09	-0.94	-0.13	-0.02	665.1
20	567.64	31.26	88.48	-21.07	-5.10	-0.65	0.83	-0.47	-0.10	-0.01	575.7
21	481.83	27.41	86.79	-10.87	-3.17	-0.57	0.56	-0.03	-0.07	-0.01	490.5
22	401.11	23.87	85.57	-1.90	-1.37	-0.47	0.31	0.34	-0.05	0.0	410.8
23	325.42	20.10	79.31	5.79	0.41	-0.23	0.0	0.52	0.01	0.0	335.6
24	1270.42	57.82	30.19	-110.52	14.68	0.78	-1.33	1.79	-0.23	-0.02	1276.6
25	1194.48	57.14	55.30	-109.42	3.94	1.32	-1.70	1.84	-0.02	0.0	1201.6
26	1062.51	54.45	86.70	-100.66	-8.32	1.28	-1.10	0.64	0.37	0.04	1072.7
27	972.08	50.98	95.82	-86.98	-11.43	0.67	-0.12	-0.52	0.38	0.03	982.1
28	868.64	45.95	96.89	-67.20	-10.92	-0.25	1.06	-1.63	0.21	0.01	887.8
29	812.43	43.06	95.40	-57.07	-10.18	-0.42	1.15	-1.53	0.08	0.0	821.2
30	707.59	37.51	90.78	-38.02	-8.08	-0.71	1.23	-1.20	-0.14	-0.02	715.4
31	635.61	34.10	89.37	-27.77	-6.87	-0.80	1.19	-0.91	-0.23	-0.02	643.4
32	530.34	29.12	86.25	-14.20	-4.71	-0.79	0.96	-0.38	-0.27	-0.02	538.3
33	433.86	24.73	88.33	-3.83	-2.55	-0.65	0.63	0.13	-0.22	-0.01	442.5
34	347.72	21.08	81.65	3.02	-0.70	-0.41	0.29	0.51	-0.11	0.0	357.8
35	274.68	18.42	82.32	5.90	0.50	-0.13	0.03	0.64	0.01	0.01	287.4

Table 3.7-10

Reactor Building - Seismic Analysis
Horizontal N-S Direction - SSE
Member Shears (units in kips)

Member	Mode Number										Combined
	1	2	3	4	5	6	7	8	9	10	
1	3054.5	-3070.1	722.4	-39.9	2.3	-4.5	-2.4	-7.0	-0.1	0.2	4390.8
2	19772.	-1844.7	-5289.3	773.8	-7.9	310.1	134.3	286.9	1.4	46.4	20571.
3	35489.	41.4	-6362.8	-613.9	177.3	420.6	93.1	-92.0	-16.8	80.7	36064.
4	43688.	927.8	-6611.8	-93.6	218.3	401.2	26.4	-444.7	-18.1	66.6	44200.
5	50259.	1738.1	-5297.2	435.1	261.8	303.5	-64.4	-776.7	-11.7	22.5	50578.
6	55778.	2493.1	-2875.7	964.7	310.1	182.8	-153.2	-1035.7	-2.7	-23.2	55930.
7	60387.	3233.8	1545.9	1535.2	364.7	51.1	-208.6	-1032.6	7.9	-49.4	60527.
8	67346.	4217.0	8027.3	193.3	23.1	-14.3	-133.3	-954.9	-1.5	-48.7	67962.
9	72339.	5080.6	16175.	642.0	-79.8	-90.5	-59.8	-676.8	-26.1	-38.6	74305.
10	78827.	6851.0	39375.	2685.8	329.7	66.4	32.1	275.4	5.0	5.7	88422.
11	123.6	13.8	-11.3	-30.1	5.8	0.8	-1.4	-0.4	-1.1	0.2	128.6
12	1572.5	-65.2	-808.0	281.3	167.4	20.4	-22.3	17.5	2.2	0.3	1799.7
13	1606.2	-60.8	-803.6	270.6	167.3	20.4	-22.1	16.8	1.8	0.3	1825.5
14	1696.3	-49.2	-776.6	240.3	163.0	19.4	-20.2	13.8	0.7	0.3	1889.1
15	1724.0	-44.8	-762.2	227.7	160.4	18.9	-19.2	12.4	0.3	0.3	1906.3
16	1772.1	-37.7	-734.7	207.2	155.2	17.9	-17.2	9.8	-0.4	0.2	1936.4
17	1857.7	-24.4	-673.8	169.3	143.6	15.9	-13.0	4.6	-1.8	0.0	1988.8
18	4049.4	404.6	1498.8	-1594.4	-318.9	9.3	45.7	-84.4	-3.2	-1.1	4633.4
19	4089.0	411.3	1538.7	-1612.8	-325.6	8.1	48.1	-86.8	-3.8	-1.2	4688.5
20	4132.4	419.4	1591.6	-1620.1	-322.1	6.5	50.5	-88.5	-4.5	-1.3	4750.7
21	4171.5	426.2	1642.6	-1637.4	-336.0	5.2	52.1	-88.6	-5.0	-1.4	4805.7
22	5024.9	587.6	2962.9	-1675.2	-380.6	-23.9	75.7	-57.7	-12.8	-1.5	6111.0
23	-415.2	-116.5	-457.2	597.7	-17.6	13.5	-28.7	43.0	-18.1	-1.8	870.7
24	-97.5	-68.2	-350.8	325.8	-1.6	23.7	-44.6	63.8	-18.6	-1.8	506.0
25	406.2	13.6	-53.1	-121.0	-62.0	41.4	-62.9	76.8	-5.2	-0.1	455.7
26	643.9	52.5	114.3	-317.0	-104.1	46.0	-63.9	71.4	1.7	0.7	749.8
27	1404.6	183.5	744.2	-881.9	-253.9	39.5	-30.6	9.1	15.8	1.5	1845.5
28	1775.6	241.0	1036.4	-1107.5	-319.7	34.3	-13.4	-18.6	18.4	1.4	2370.0
29	848.5	27.1	53.5	12.7	-80.2	3.5	6.4	-22.1	0.0	-0.5	855.0
30	1233.3	90.2	430.0	-138.5	-141.4	-10.0	30.8	-44.8	-10.4	-1.8	1326.3
31	1432.4	125.1	666.6	-188.9	-168.5	-18.6	43.6	-50.8	-18.3	-2.5	1607.9
32	1615.0	157.9	919.1	-203.8	-184.8	-26.5	52.9	-48.4	-25.3	-2.8	1888.2
33	1847.1	201.7	1305.3	-185.5	-191.9	-34.3	59.7	-34.2	-30.8	-2.7	2288.7
34	-539.8	-420.3	-1512.9	2152.7	-124.3	5.8	6.1	-28.7	6.2	0.9	2721.7
35	-1923.2	-333.6	-716.4	1824.1	-283.7	-13.4	26.6	-47.1	2.4	0.8	2781.5
36	-6464.0	-635.0	-3498.0	1593.3	373.6	35.1	-75.9	23.8	12.0	1.0	7557.2
37	-1728.0	-231.0	-853.0	182.3	191.7	35.8	-60.6	18.4	30.6	2.0	1961.0
38	-2105.0	-421.4	-2112.1	1733.6	453.2	4.4	-54.8	83.9	0.4	1.0	3507.1

Table 3.7-11

Reactor Building - Seismic Analysis
Horizontal N-S Direction - OBE
Member Moments (units in ft-kips x 10^3)

	Mode Number							
	1		2		3		4	
Member	Top	Bottom	Top	Bottom	Top	Bottom	Top	Bottom
1	14.62	158.94	-0.05	145.11	-16.98	-17.15	-0.02	1.91
2	251.79	-1012.98	-145.39	216.41	-86.79	290.43	-2.03	-27.76
3	1091.38	-1814.46	-215.15	214.31	-376.84	506.47	27.33	-14.83
4	1890.82	-3026.67	-212.25	188.13	-587.73	759.63	14.16	-11.73
5	3103.17	-4158.56	-185.04	148.54	-838.79	950.03	10.85	-19.68
6	4240.21	-5913.52	-144.29	69.50	-1031.02	1117.29	18.82	-47.76
7	6001.30	-7631.71	-63.67	-23.65	-1202.18	1160.43	45.71	-87.16
8	8057.97	-8645.82	50.72	-87.53	-1158.00	1087.92	5.67	-7.36
9	8860.00	-10308.3	104.85	-206.56	-1097.75	773.93	-30.96	18.10
10	10964.1	-10964.1	255.01	-255.01	-1369.25	-1369.25	-41.39	41.39
11	0.05	-2.00	0.0	-0.22	-0.09	0.27	0.0	0.48
12	2.02	-17.51	0.22	0.42	-0.36	8.32	-0.48	-2.29
13	17.74	-43.84	-0.41	1.40	-8.39	21.44	2.28	-6.68
14	43.71	-61.10	-1.39	1.89	-21.68	29.64	6.66	-9.12
15	61.45	-77.13	-1.88	2.29	-29.73	36.67	9.10	-11.17
16	77.66	-93.91	-2.27	2.62	-36.82	43.56	11.13	-13.03
17	93.92	-117.60	-2.59	2.91	-43.94	52.53	12.94	-15.10
18	117.88	-146.34	-2.88	0.03	-52.92	42.38	14.98	-3.78
19	146.87	-198.55	0.0	-5.20	-42.57	23.12	3.67	16.71
20	199.05	-251.37	5.24	-10.55	-23.40	3.25	-16.83	37.45
21	251.34	-304.20	10.58	-15.98	-3.50	-17.31	-37.53	58.27
22	313.71	-374.01	16.69	-23.74	9.99	-45.55	-59.76	79.87
23	4.26	-0.16	0.37	0.78	-7.56	12.06	-4.64	-1.26
24	0.37	1.22	-0.76	1.87	-12.39	18.09	1.03	-6.33
25	-0.82	-3.34	-1.82	1.68	-18.46	19.00	5.85	-4.61
26	3.54	-10.92	-1.66	1.06	-19.09	17.78	4.33	-0.70
27	13.54	-23.11	-0.68	-0.57	-17.70	12.63	-3.11	9.12
28	23.23	-45.87	0.61	-3.68	-12.61	-0.61	-9.53	23.65
29	46.91	-54.81	3.84	-4.09	0.74	-1.24	-25.12	25.01
30	55.21	-72.71	4.15	-5.43	1.28	-7.39	-25.46	27.42
31	72.88	-93.05	5.46	-7.22	7.42	-16.80	-27.65	30.31
32	93.30	-116.06	7.24	-9.47	16.80	-29.75	-30.49	33.36
33	116.31	-142.28	9.50	-12.33	29.67	-48.02	-33.51	36.12
34	0.0	0.0	0.0	0.0	0.0	0.0	0.0	0.0
35	0.0	0.0	0.0	0.0	0.0	0.0	0.0	0.0
36	-368.38	368.38	-23.88	23.88	-37.07	37.07	80.19	-80.19
37	-107.26	107.26	-11.98	11.98	-47.94	47.94	36.19	-36.19
38	0.0	0.0	0.0	0.0	0.0	0.0	0.0	0.0

Table 3.7-11

Reactor Building - Seismic Analysis
Horizontal N-S Direction - OBE
Member Moments (units in ft-kips x 10^3) (Continued)

	Mode Number							
	5		6		7		8	
Member	Top	Bottom	Top	Bottom	Top	Bottom	Top	Bottom
1	-0.39	0.28	0.35	-0.14	0.64	-0.53	3.71	-3.38
2	-2.49	2.80	1.94	-13.88	3.61	-8.77	19.85	-30.89
3	-4.61	0.99	14.84	-23.41	10.87	-12.77	42.34	-40.47
4	-2.73	-2.95	23.65	-34.08	14.31	-15.00	49.54	-37.98
5	1.11	-6.60	33.12	-39.49	15.89	-14.53	44.92	-28.61
6	4.46	-13.76	37.08	-42.56	14.86	-10.26	34.44	-3.37
7	10.84	-20.69	37.34	-38.72	9.80	-4.17	9.00	18.88
8	9.85	-10.05	35.61	-35.49	5.54	-4.38	-18.89	27.22
9	-1.00	2.60	29.62	-27.80	5.44	-4.24	-24.41	37.96
10	-31.04	31.04	-37.44	37.44	-3.82	3.82	24.49	-24.49
11	0.02	-0.11	0.0	-0.02	-0.01	0.03	0.0	0.0
12	0.12	-1.77	0.02	-0.22	-0.03	0.25	0.0	-0.18
13	1.78	-4.50	0.22	-0.55	-0.26	0.62	0.18	-0.45
14	4.53	-6.20	0.55	-0.75	-0.63	0.83	0.46	-0.60
15	6.22	-7.67	0.75	-0.92	-0.84	1.01	0.61	-0.72
16	7.69	-9.11	0.92	-1.09	-1.02	1.18	0.72	-0.81
17	9.13	-10.96	1.08	-1.28	-1.19	1.35	0.82	-0.88
18	10.96	-8.72	1.27	-1.33	-1.35	1.03	0.88	-0.29
19	8.71	-4.59	1.32	-1.43	-1.03	0.42	0.29	0.81
20	4.60	-0.37	1.41	-1.49	-0.42	-0.22	-0.81	1.93
21	0.35	3.91	1.47	-1.54	0.22	-0.88	-1.93	3.05
22	-4.43	8.99	0.92	-0.63	0.89	-1.80	-2.69	3.38
23	9.73	-9.55	-1.36	1.23	1.81	-1.52	-1.92	1.50
24	9.94	-9.92	-1.27	0.88	1.58	-0.85	-1.54	0.51
25	10.29	-9.66	-0.89	0.47	0.85	-0.21	-0.50	-0.29
26	9.75	-8.55	-0.46	-0.07	0.19	0.54	0.30	-1.12
27	8.34	-6.61	0.23	-0.50	-0.64	0.85	0.92	-0.98
28	6.58	-2.51	0.52	-0.95	-0.86	1.03	0.96	-0.72
29	2.28	-1.54	1.00	-1.03	-1.03	0.97	0.58	-0.37
30	1.46	0.55	1.04	-0.90	-0.96	0.52	0.32	0.32
31	-0.61	2.98	0.90	-0.63	-0.51	-0.10	-0.35	1.07
32	-3.03	5.64	0.63	-0.25	0.12	-0.87	-1.10	1.78
33	-5.69	8.39	0.23	0.25	0.88	-1.72	-1.80	2.28
34	0.0	0.0	0.0	0.0	0.0	0.0	0.0	0.0
35	0.0	0.0	0.0	0.0	0.0	0.0	0.0	0.0
36	9.22	-9.22	-0.14	0.14	-1.75	1.75	2.91	-2.91
37	8.41	-8.41	0.28	-0.28	-1.72	1.72	2.25	-2.25
38	0.0	0.0	0.0	0.0	0.0	0.0	0.0	0.0

Table 3.7-11

Reactor Building - Seismic Analysis
Horizontal N-S Direction - OBE
Member Moments (units in ft-kips x 10^3) (Continued)

	Mode Number					
	9		10		Combined	
Member	Top	Bottom	Top	Bottom	Top	Bottom
1	0.15	-0.15	-1.48	1.47	22.83	215.95
2	0.57	-0.62	-4.28	2.50	304.36	1076.96
3	0.87	-0.53	-4.09	2.45	1176.1	1896.69
4	0.70	-0.23	-3.63	1.89	1992.61	3126.87
5	0.37	-0.12	-2.76	2.29	3220.62	4268.73
6	0.25	-0.17	-2.96	3.66	4366.61	6018.91
7	0.30	-0.51	-3.87	5.21	6121.17	7720.12
8	0.19	-0.17	-5.06	5.48	8141.03	8714.58
9	-0.25	0.77	-5.17	5.94	8928.51	10339.5
10	0.22	-0.22	1.26	-1.26	11052.4	11052.4
11	0.0	0.02	0.0	0.0	0.10	2.09
12	-0.02	0.0	0.0	-0.01	2.12	19.61
13	0.0	-0.03	0.01	-0.01	19.84	49.50
14	0.03	-0.04	0.01	-0.02	49.49	68.84
15	0.04	-0.04	0.02	-0.02	69.19	86.56
16	0.04	-0.04	0.02	-0.02	87.06	104.79
17	0.03	-0.01	0.02	-0.02	104.95	130.21
18	0.01	0.01	0.03	-0.02	130.60	152.66
19	-0.02	0.07	0.02	0.0	153.21	200.72
20	-0.07	0.12	0.0	0.01	201.25	254.39
21	-0.13	0.19	-0.01	0.03	254.39	310.68
22	-0.22	0.38	0.0	0.02	320.00	386.02
23	0.29	-0.11	0.03	-0.01	14.40	15.80
24	0.11	0.19	0.01	0.02	16.29	21.76
25	-0.17	0.23	-0.02	0.02	22.08	22.14
26	-0.21	0.19	-0.02	0.01	22.23	22.65
27	0.18	-0.29	0.03	-0.04	24.06	28.71
28	0.33	-0.56	0.04	-0.06	28.93	51.84
29	0.68	-0.68	0.07	-0.07	53.44	60.44
30	0.71	-0.56	0.07	-0.04	60.99	78.26
31	0.57	-0.31	0.04	-0.01	78.51	99.61
32	0.31	0.05	0.01	0.03	99.90	124.89
33	-0.06	0.49	-0.03	0.07	125.15	155.22
34	0.0	0.0	0.0	0.0	0.0	0.0
35	0.0	0.0	0.0	0.0	0.0	0.0
36	0.37	-0.37	0.0	0.0	379.72	379.72
37	0.49	-0.49	0.07	-0.07	123.87	123.87
38	0.0	0.0	0.0	0.0	0.0	0.0

Table 3.7-12

Reactor Building - Seismic Analysis
Vertical Direction - OBE
Acceleration (units in g x 10^{-3})

	Mode Number										
Mass	1	2	3	4	5	6	7	8	9	10	Combined
1	159.32	-0.14	-38.87	7.46	1.10	0.41	-0.53	-0.01	0.0	-0.06	164.22
2	151.73	-0.10	-20.81	-0.27	-0.16	-0.21	1.09	0.02	0.0	-0.33	153.15
3	149.49	-0.09	-17.58	-0.41	-0.15	-0.14	0.21	0.0	0.0	0.28	150.52
4	146.55	-0.08	-13.80	-0.42	-0.10	-0.05	-0.50	-0.02	0.0	0.30	147.20
5	142.40	-0.06	-8.79	-0.37	-0.04	0.06	-1.06	-0.02	0.0	0.04	142.68
6	138.52	-0.05	-4.54	-0.29	0.02	0.14	-1.15	-0.02	0.0	-0.19	138.60
7	131.84	-0.03	2.00	-0.12	0.09	0.21	-0.76	0.0	0.0	-0.32	131.85
8	126.72	-0.01	6.16	0.0	0.13	0.23	-0.23	0.01	0.0	-0.15	126.87
9	125.01	-0.01	7.41	0.04	0.14	0.22	-0.05	0.02	0.0	-0.08	125.23
10	122.55	0.0	8.78	0.08	0.14	0.20	0.19	0.02	0.0	0.04	122.86
11	129.23	0.0	15.72	0.45	1.12	-11.97	-1.27	2.68	0.0	0.06	130.77
12	129.00	0.0	15.46	0.43	1.07	-11.30	-1.13	2.29	0.0	0.05	130.45
13	128.80	0.0	15.22	0.42	1.03	-10.72	-1.01	1.96	0.0	0.04	130.17
14	128.53	0.0	14.90	0.40	0.98	-9.93	-0.84	1.52	0.0	0.02	129.79
15	128.31	0.0	14.65	0.38	0.93	-9.35	-0.73	1.23	0.0	0.01	129.50
16	128.11	0.0	14.42	0.37	0.90	-8.81	-0.63	0.96	0.0	0.0	129.23
17	127.90	0.0	14.17	0.35	0.86	-8.26	-0.53	0.70	0.0	-0.01	128.96
18	127.57	0.0	13.80	0.33	0.79	-7.44	-0.39	0.36	0.0	-0.02	128.54
19	127.38	0.0	13.59	0.32	0.76	-6.99	-0.31	0.19	0.0	-0.02	128.30
20	126.97	0.0	13.14	0.29	0.69	-6.06	-0.16	-0.15	0.0	-0.03	127.80
21	126.54	0.0	12.67	0.26	0.62	-5.09	-0.02	-0.46	0.0	-0.03	127.28
22	126.10	0.0	12.19	0.24	0.55	-4.16	0.11	-0.73	0.0	-0.03	126.76
23	124.57	0.0	10.70	0.17	0.36	-2.13	0.17	-0.43	0.0	0.01	125.05
24	156.00	1.22	-31.69	0.64	4.86	0.29	0.06	-0.01	-0.09	-0.03	159.28
25	153.67	1.10	-27.09	-0.43	3.12	0.15	0.03	0.0	0.07	0.03	156.09
26	149.00	0.88	-18.05	-0.39	-0.17	-0.10	-0.09	-0.01	0.29	0.11	150.09
27	145.12	0.71	-11.26	0.21	-2.22	-0.24	-0.12	-0.01	0.21	0.06	145.58
28	140.28	0.50	-3.28	0.48	-4.33	-0.37	-0.12	-0.01	0.02	-0.02	140.40
29	139.66	0.47	-2.50	0.49	-4.40	-0.37	-0.11	-0.01	0.0	-0.02	139.77
30	138.19	0.43	-0.83	0.50	-4.41	-0.35	-0.08	0.0	-0.04	-0.03	138.28
31	136.62	0.38	0.42	0.47	-4.05	-0.29	-0.04	0.0	-0.06	-0.02	136.69
32	133.97	0.30	2.32	0.41	-3.30	-0.20	0.02	0.01	-0.06	0.01	134.04
33	131.18	0.22	4.17	0.33	-2.47	-0.09	0.08	0.01	-0.06	0.03	131.29
34	128.22	0.14	5.98	0.25	-1.57	-0.02	0.14	0.01	-0.04	0.04	128.38
35	125.01	0.06	7.66	0.15	-0.58	0.13	0.17	0.02	-0.02	0.05	125.24

Table 3.7-13

Reactor Building - Seismic Analysis
Vertical Direction - OBE
Displacement (units in ft x 10^{-6})

	Mode Number										
Mass	1	2	3	4	5	6	7	8	9	10	Combined
1	7589.63	-1.03	-190.01	16.34	0.18	0.61	-0.40	0.0	0.0	0.02	7692.03
2	7227.78	-0.76	-101.69	-0.59	-0.32	-0.32	0.81	0.01	0.0	-0.11	7228.50
3	7121.02	-0.69	-85.94	-0.91	-0.29	-0.21	0.16	0.0	0.0	0.09	7121.54
4	6981.40	-0.60	-67.43	-0.92	-0.20	-0.07	-0.37	-0.01	0.0	0.10	6981.73
5	6783.59	-0.48	-42.96	-0.80	-0.07	0.09	-0.79	-0.01	0.0	0.01	6783.73
6	6598.67	-0.37	-22.17	-0.63	0.04	0.20	-0.86	-0.01	0.0	-0.06	6598.71
7	6280.28	-0.20	9.78	-0.27	0.18	0.32	-0.57	0.0	0.0	-0.11	6280.29
8	6036.62	-0.08	30.11	0.0	0.26	0.34	-0.17	0.01	0.0	-0.05	6036.70
9	5955.15	-0.04	36.20	0.08	0.28	0.33	-0.03	0.01	0.0	-0.03	5955.26
10	5837.88	0.01	42.90	0.18	0.28	0.30	0.14	0.01	0.0	0.01	5838.04
11	6256.11	0.01	76.86	0.98	2.22	-17.68	-0.95	1.53	0.0	0.02	6156.62
12	6145.35	0.01	75.55	0.94	2.13	-16.88	-0.84	1.30	0.0	0.02	6145.84
13	6135.73	0.01	74.39	0.91	2.04	-16.01	-0.75	1.11	0.0	0.01	6136.20
14	6122.58	0.01	72.81	0.87	1.93	-14.84	-0.63	0.87	0.0	0.01	6123.03
15	6112.33	0.01	71.59	0.83	1.85	-13.96	-0.55	0.70	0.0	0.0	6112.77
16	6102.83	0.01	70.47	0.80	1.77	-13.17	-0.47	0.55	0.0	0.0	6103.25
17	6092.76	0.01	69.28	0.77	1.69	-12.34	-0.40	0.40	0.0	0.0	6093.17
18	6077.03	0.01	67.46	0.72	1.57	-11.12	-0.29	0.20	0.0	-0.01	6077.42
19	6067.97	0.01	66.42	0.69	1.51	-10.44	-0.23	0.11	0.0	-0.01	6068.34
20	6048.69	0.01	64.23	0.64	1.37	-9.05	-0.12	-0.09	0.0	-0.01	6049.04
21	6028.00	0.01	61.90	0.58	1.22	-7.61	-0.02	-0.26	0.0	-0.01	6028.32
22	6007.02	0.01	59.58	0.52	1.08	-6.22	0.08	-0.42	0.0	-0.01	6007.32
23	5934.34	0.01	52.28	0.37	0.72	-3.19	0.13	-0.24	0.0	0.0	5934.57
24	7431.29	9.41	-154.90	-1.40	9.61	0.43	0.04	0.0	-0.03	-0.01	7432.91
25	7320.58	8.54	-132.40	-0.94	6.16	0.23	0.0	0.0	0.03	0.01	7321.78
26	7097.74	6.83	-88.21	-0.09	-0.35	-0.15	-0.07	-0.01	0.11	0.04	7098.29
27	6913.16	5.49	-55.01	0.47	-4.40	-0.36	-0.09	-0.01	0.08	0.02	6913.38
28	6682.37	3.87	-16.01	1.05	-8.56	-0.55	-0.09	-0.01	0.01	-0.01	6682.40
29	6653.12	3.69	-12.22	1.08	-8.69	-0.55	-0.08	0.0	0.0	-0.01	6653.14
30	6582.74	3.29	-4.05	1.10	-8.72	-0.52	-0.06	0.0	-0.02	-0.01	6582.75
31	6508.01	2.12	2.06	1.04	-8.00	-0.44	-0.03	0.0	-0.02	-0.01	6508.02
32	6381.94	2.33	11.33	0.90	-6.53	-0.29	0.02	0.0	-0.02	0.0	6381.95
33	6249.23	1.72	20.40	0.73	-4.89	-0.13	0.06	0.01	-0.02	0.01	6249.27
34	6108.22	1.01	29.41	0.55	-3.10	0.03	0.10	0.01	-0.02	0.01	6108.29
35	5954.94	0.46	37.42	0.34	-1.15	0.19	0.13	0.01	-0.01	0.02	5955.06

Table 3.7-14

Reactor Building - Seismic Analysis
Vertical Direction - SSE
Acceleration (units in g x 10^{-3})

	Mode Number										
Mass	1	2	3	4	5	6	7	8	9	10	Combined
1	313.63	-0.21	-60.27	11.68	1.78	0.72	-1.07	-0.02	0.0	0.12	319.65
2	298.67	-0.15	-32.26	-0.42	-0.27	-0.38	2.18	0.05	0.0	-0.66	300.42
3	294.26	-0.13	-27.26	-0.65	-0.24	-0.25	0.42	0.0	0.0	0.57	295.52
4	288.49	-0.12	-21.39	-0.66	-0.16	-0.09	-0.99	-0.04	0.0	0.59	289.29
5	280.32	-0.09	-13.63	-0.57	-0.06	0.11	-2.2	-0.05	0.0	0.07	280.66
6	272.68	-0.07	-7.03	-0.45	0.03	0.24	-2.31	-0.04	0.0	-0.38	272.78
7	259.52	-0.04	3.10	-0.19	0.15	0.37	-1.52	0.0	0.0	-0.64	259.54
8	249.45	-0.02	9.55	0.0	0.21	0.39	-0.45	0.02	0.0	-0.30	249.64
9	246.08	-0.01	11.48	0.06	0.23	0.39	-0.09	0.03	0.0	0.15	246.35
10	241.24	0.0	13.61	0.13	0.23	0.35	0.37	0.03	0.0	0.08	241.62
11	254.39	0.0	24.38	0.70	1.81	-20.94	-2.54	5.38	0.0	0.13	256.49
12	253.94	0.0	23.97	0.67	1.74	-19.78	-2.26	4.60	0.0	0.10	255.90
13	253.55	0.0	23.60	0.65	1.67	-18.76	-2.02	3.93	0.0	0.08	255.38
14	253.00	0.0	23.09	0.62	1.58	-17.38	-1.69	3.06	0.0	0.04	254.68
15	252.58	0.0	22.71	0.60	1.51	-16.36	-1.47	2.46	0.0	0.02	254.15
16	252.19	0.0	22.35	0.57	1.45	-15.42	-1.26	1.93	0.0	0.0	253.66
17	251.77	0.0	21.98	0.55	1.38	-14.46	-1.06	1.41	0.0	-0.01	253.15
18	251.12	0.0	21.40	0.52	1.28	-13.02	-0.78	0.72	0.0	-0.03	252.38
19	250.75	0.0	21.07	0.50	1.23	-12.24	-0.63	0.37	0.0	-0.04	251.93
20	249.95	0.0	20.37	0.46	1.12	-10.60	-0.33	-0.30	0.0	-0.05	251.01
21	249.10	0.0	19.64	0.41	1.00	-8.92	-0.04	-0.93	0.0	-0.06	250.03
22	248.23	0.0	18.90	0.37	0.88	-7.29	0.22	-1.47	0.0	-0.06	249.06
23	245.23	0.0	16.58	0.26	0.59	-3.73	0.34	-0.86	0.0	0.01	245.82
24	307.08	1.83	-49.13	-1.00	7.85	0.51	0.12	0.01	-0.18	-0.06	311.12
25	302.51	1.66	-42.00	-0.67	5.03	0.27	0.01	0.0	0.15	0.06	305.47
26	293.30	1.33	-27.98	-0.06	-0.28	-0.18	-0.18	-0.02	0.59	0.21	294.64
27	285.67	1.07	-17.45	0.33	-3.59	-0.42	-0.23	-0.02	0.41	0.12	286.23
28	276.14	0.75	-5.08	0.75	-6.99	-0.65	-0.23	-0.02	0.04	-0.04	276.30
29	274.93	0.72	-3.88	0.77	-7.10	-0.64	-0.21	-0.02	0.0	-0.05	275.07
30	272.02	0.64	-1.28	0.79	-7.12	-0.61	-0.16	-0.01	-0.09	-0.06	272.14
31	268.93	0.57	0.65	0.74	-6.53	-0.52	-0.08	0.0	-0.11	-0.03	269.03
32	263.72	0.45	3.59	0.64	-5.34	-0.34	0.04	0.01	-0.12	0.01	263.82
33	258.24	0.33	6.47	0.52	-4.00	-0.16	0.16	0.02	-0.11	0.05	258.37
34	252.41	0.21	9.27	0.39	-2.53	0.03	0.27	0.03	-0.09	0.09	252.60
35	246.08	0.09	11.87	0.24	-0.94	0.22	0.34	0.03	-0.04	0.09	246.37

Table 3.7-15

Reactor Building - Seismic Analysis
Vertical Direction - SSE
Displacement (units in ft x 10^{-6})

	Mode Number										
Mass	1	2	3	4	5	6	7	8	9	10	Combined
1	14940.2	-1.62	-294.60	25.60	3.52	1.08	-0.80	-0.01	0.0	0.04	14943.1
2	14227.9	-1.14	-157.67	-0.93	-0.52	-0.56	1.63	0.03	0.0	-0.22	14228.8
3	14017.8	-1.04	-133.25	-1.42	-0.47	-0.37	0.32	0.0	0.0	0.19	14018.4
4	13742.9	-0.90	-104.55	-1.44	-0.33	-0.13	-0.74	-0.02	0.0	0.20	13743.3
5	13353.5	-0.72	-66.61	-1.26	-0.12	0.16	-1.59	-0.03	0.0	0.02	13353.7
6	12989.5	-0.56	-34.38	-0.98	0.06	0.36	-1.73	-0.02	0.0	-0.13	12989.5
7	12362.8	-0.30	15.16	-0.42	0.30	0.56	-1.14	0.0	0.0	-0.22	12362.8
8	11883.1	-0.12	46.69	-0.01	0.42	0.59	-0.34	0.01	0.0	-0.10	11883.2
9	11722.7	-0.06	56.13	0.12	0.45	0.58	-0.07	0.02	0.0	-0.05	11722.8
10	11491.9	0.01	66.52	0.28	0.46	0.52	0.28	0.02	0.0	0.03	11492.1
11	12118.3	0.01	119.16	1.54	3.58	-31.28	-1.90	3.06	0.0	0.04	12118.9
12	12097.2	0.01	117.14	1.48	3.43	-29.54	-1.69	2.61	0.0	0.03	12097.8
13	12078.2	0.01	115.35	1.43	3.30	-28.02	-1.51	2.23	0.0	0.02	12078.8
14	12052.3	0.01	112.88	1.36	3.12	-25.96	-1.27	1.74	0.0	0.01	12052.9
15	12032.1	0.01	111.00	1.30	2.98	-24.44	-1.10	1.40	0.0	0.01	12032.6
16	12013.4	0.01	109.26	1.26	2.86	-23.04	-0.95	1.09	0.0	0.0	12013.9
17	11993.6	0.01	107.41	1.21	2.73	-21.59	-0.79	0.80	0.0	0.0	11994.1
18	11962.7	0.01	104.59	1.13	2.54	-19.45	-0.58	0.41	0.0	-0.01	11963.2
19	11944.8	0.01	102.99	1.09	2.43	-18.28	-0.47	0.21	0.0	-0.01	11945.2
20	11906.9	0.01	99.59	1.00	2.20	-15.83	-0.25	-0.17	0.0	-0.02	11907.3
21	11866.1	0.01	95.98	0.91	1.97	-13.32	-0.03	-0.53	0.0	-0.02	11866.5
22	11824.8	0.01	92.38	0.81	1.74	-10.89	0.17	-0.83	0.0	-0.02	11825.2
23	11681.8	0.01	81.06	0.57	1.16	-5.57	0.25	-0.49	0.0	0.0	11682.1
24	14628.5	14.12	-240.17	-2.19	15.53	0.76	0.09	0.01	-0.07	-0.02	14640.5
25	14410.6	12.82	-205.28	-1.48	9.95	0.40	0.0	0.0	0.06	0.02	14412.1
26	13971.9	10.25	-136.77	-0.13	-0.56	-0.27	-0.14	-0.01	0.23	0.07	13972.6
27	13608.6	8.24	-85.30	0.73	-7.10	-0.63	-0.17	-0.01	0.16	0.04	13608.9
28	13154.3	5.81	-24.82	1.64	-13.82	-0.97	-0.17	-0.01	0.01	-0.01	13154.3
29	13096.7	5.54	-18.95	1.69	-14.04	-0.96	-0.16	-0.01	0.0	-0.02	13096.7
30	12958.1	4.94	-6.28	1.73	-14.09	-0.91	-0.12	-0.01	-0.03	-0.02	12958.1
31	12811.0	4.38	3.19	1.62	-12.91	-0.77	-0.06	0.0	-0.04	-0.01	12811.0
32	12562.9	3.49	17.57	1.40	-10.55	-0.51	0.03	0.01	-0.05	0.0	12562.9
33	12301.6	2.58	31.63	1.15	-7.90	-0.23	0.12	0.01	-0.04	0.02	12301.6
34	12024.0	1.65	45.29	0.86	-5.00	0.05	0.20	0.02	-0.03	0.03	12024.1
35	11722.3	0.70	58.02	0.53	-1.86	0.33	0.26	0.02	-0.02	0.03	11722.4

Table 3.7-16

Lumped Representation of Soil-Structure Interaction

Motion	Equivalent Spring Constant[a]	Equivalent Damping Coefficient[a,b]
	A. For a Rectangular Foundation	
Vertical	$k_v = \frac{G}{1-\nu}\beta_v\sqrt{4cd}$	(c)
Horizontal	$k_h = 4(1+\nu)G\beta_h\sqrt{cd}$	(c)
Rocking	$k_r = \frac{G}{1-\nu}\beta_R \cdot 8cd^2$	(c)
Torsional	(c)	(c)
	B. For a Circular Foundation	
Vertical	$k_v = \frac{4GR}{1-\nu}$	$c_v = 0.85k_vR\sqrt{\rho/G}$
Horizontal	$k_h = \frac{32(1-\nu)GR}{7-8}$	$c_h = 0.575k_hR\sqrt{\rho/G}$
Rocking	$k_R = \frac{8GR^3}{3(1-\nu)}$	$c_R = \frac{0.30}{1+B_R}k_RR\sqrt{\rho/G}$
Torsional	$k_t = \frac{16GR^3}{3}$	$c_t = \frac{\sqrt{k_tI_t}}{1+2B_t}$

[a] In above formulas

2c = width of the rectangular foundation (along axis of rotation for the case of rocking)

2d = length of the rectangular foundation (in the plane of rotation for rocking)

β_v, β_h, and β_R = constants depending on the ratio d/c (See Figure 10-16, p. 351 of Reference 3.7-5)

R = radius of the circular foundation

$B_R = \frac{3(1-\nu)I_R}{8\rho R^5}$

I_R = total mass moment of inertia of structure and foundation about the rocking axis at the base

$B_T = I_T \big/ \rho R^5$

I_T = polar mass moment of inertia of structure and foundation

G = shear modulus of soil material

ν = Poisson's ratio of soil material

ρ = density of soil material

Table 3.7-16

Lumped Representation of Soil-Structure Interaction (Continued)

[b] Conservative values not exceeding those defined in Table 3.7-1 are used for the soil damping in the analytical model for soil-structure interaction.

[c] Use formulas and diagrams for an equivalent circular base with a radius determined by the following:

For translation: $R = \sqrt{\frac{4cd}{\pi}}$

For rocking: $R = \sqrt[4]{\frac{16cd^3}{3\pi}}$

For torsion: $R = \sqrt[4]{\frac{16cd\left(c^2 + d^2\right)}{6\pi}}$

Table 3.7-17

Dynamic Response Cycles Expected During a Seismic Event for Nuclear Steam Supply Systems and Components

Number of Seismic Cycles	Frequency Bandwidth (Hz)		
	0-10	10-20	20-50
Total	168	359	643
Between 75% and 100% of peak loads (0.5% of total)	0.8	1.8	3.2
Between 50% 75% of peak loads (4.5% of total)	7.5	16.2	28.9

Table 3.7-18

Fatigue Evaluation Due to Seismic Load

Component	Calculated Number of Cycles at Peak Stress	Design Number of OBE Cycles at Peak Stress
1. Reactor pressure vessel		
Vessel	3	10
Shroud support	3	10
Skirt	3	10
2. Category I piping		
Recirculation lines	3	50
Steam lines	3	50

Table 3.7-19

Comparison of the Maximum and Allowable Seismic Loads
of Reactor Pressure Vessel and Internals

Location	Seismic Loads		Allowable Loads
	X-Excitation	Y-Excitation	
Top guide shear (kip)	333	292	860
Core plate shear (kip)	333	290	860
Stabilizer force (total) (kip)	1250	1250	3600
Maximum fuel moment:			
Total (in.-kip)	16,960	14,760	40,300
Per bundle (in.-kip)	22.2	19.3	52.7
Maximum shroud moment (in.-kip)	220,500	218,500	450,900
Maximum shroud shear (kip)	1030	1030	2386
Maximum vessel shirt moment (in.-kip)	204,900	170,700	2,304,000
Vessel skirt shear (kip)	1130	1100	5200

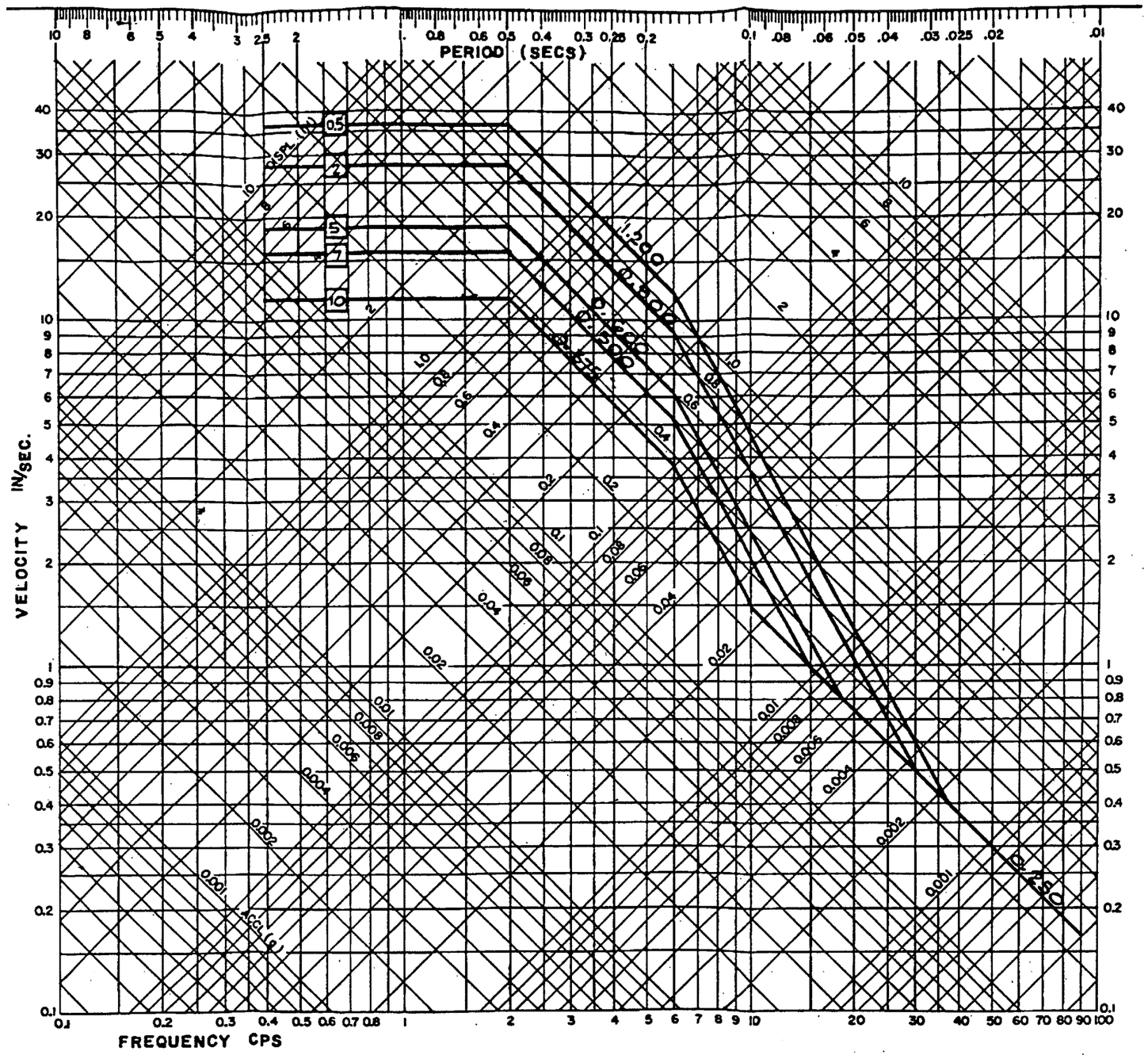

FOR 0.5%, 2%, 5%, 7% AND 10% DAMPING

Columbia Generating Station Final Safety Analysis Report	Response Spectra Safe Shutdown Earthquake - Horizontal Component	
	Draw. No. 020552.08	Rev. / Figure 3.7-1

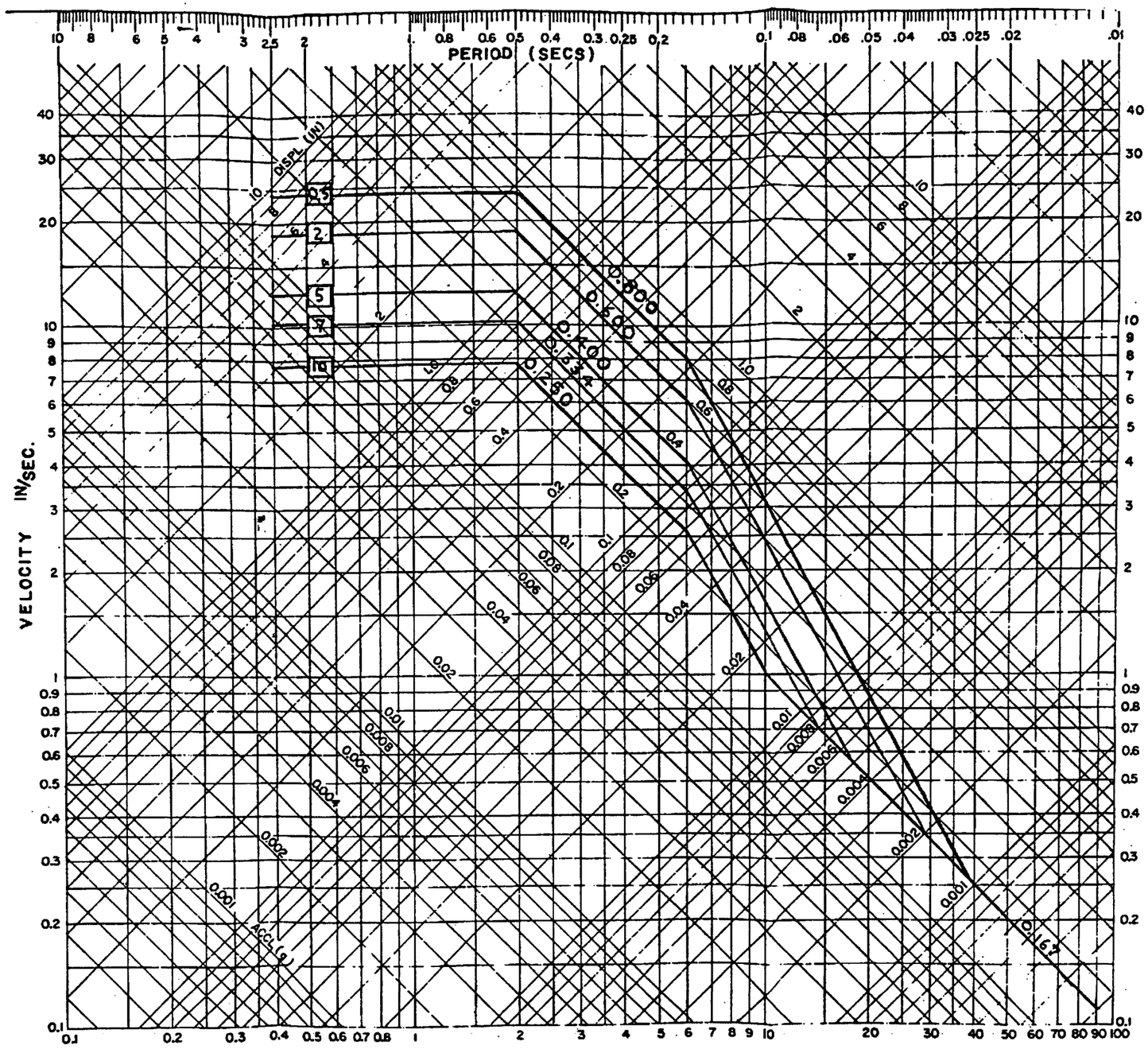

FOR 0.5%, 2%, 5%, 7% AND 10% DAMPING

Columbia Generating Station Final Safety Analysis Report	Response Spectra Safe Shutdown Earthquake - Vertical Component		
	Draw. No. 020552.09	Rev.	Figure 3.7-2

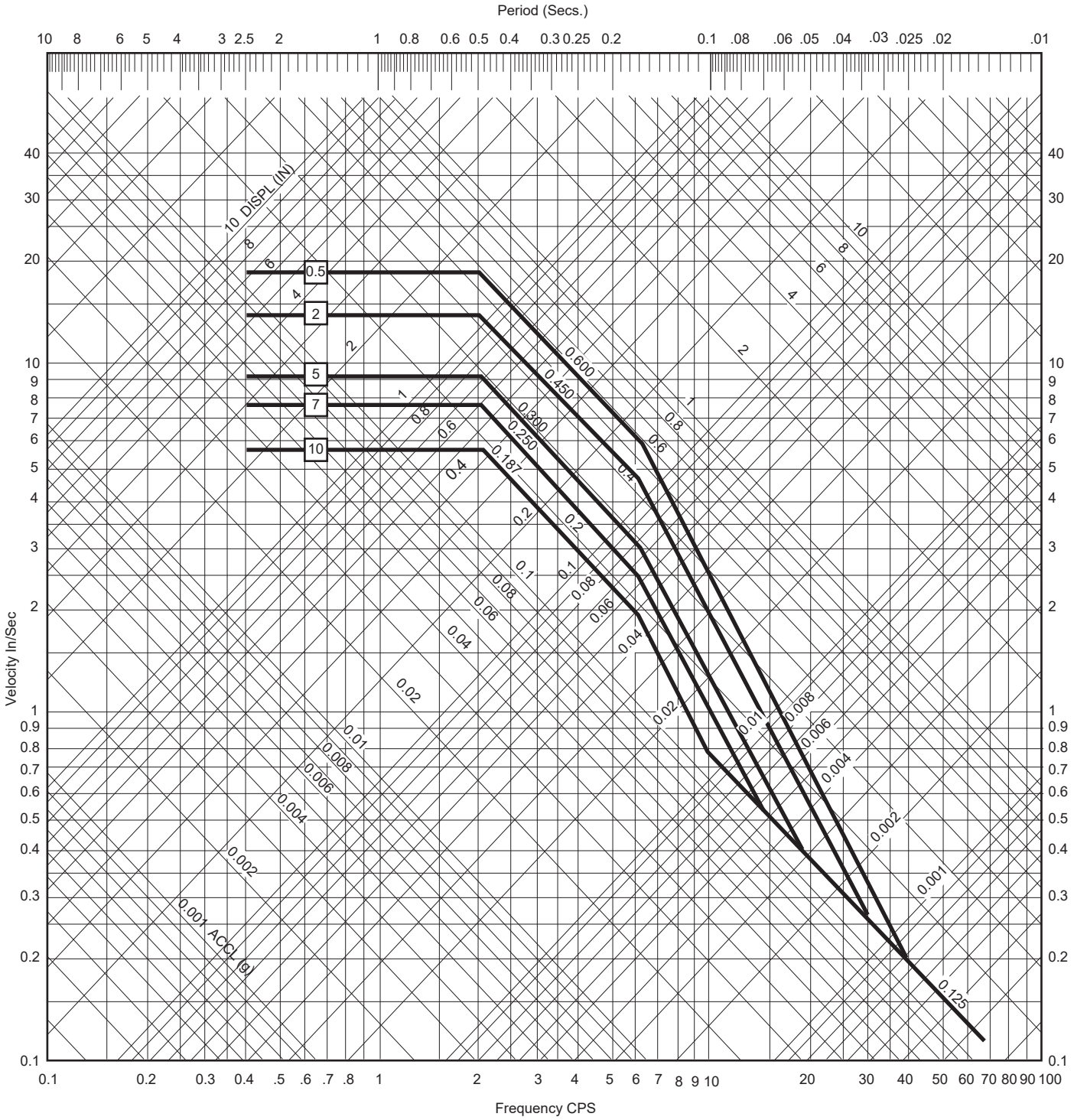

For 0.5%, 2%, 5%, 7% and 10% Damping

Columbia Generating Station **Final Safety Analysis Report**	**Response Spectra Operating Basis Earthquake - Horizontal Component**		
	Draw. No. 990578.99	Rev.	Figure 3.7-3

Form No. 960690

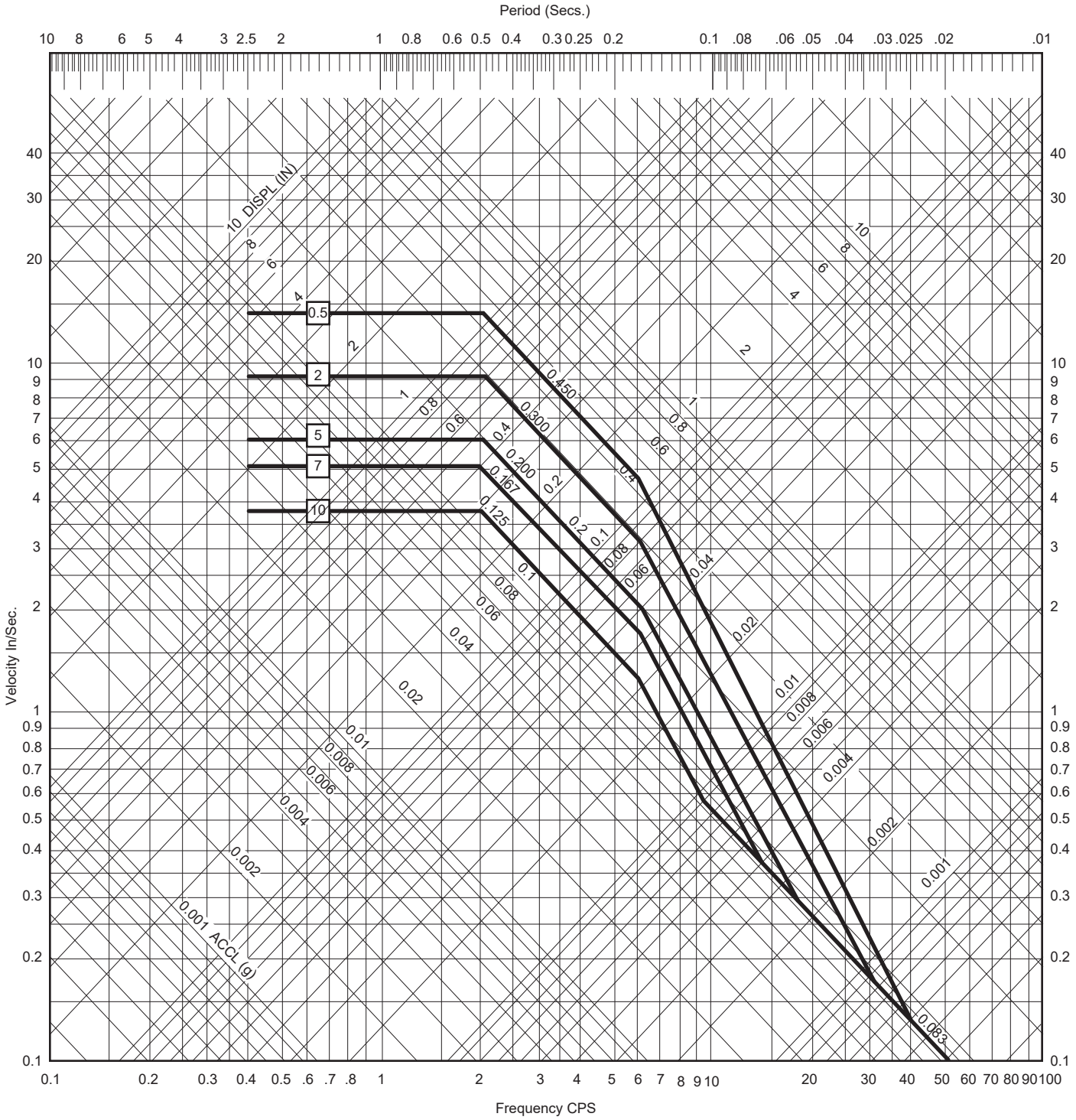

For 0.5%, 2%, 5%, 7% and 10% Damping

Columbia Generating Station **Final Safety Analysis Report**	**Response Spectra Operating Basis Earthquake - Vertical Component**		
	Draw. No. **990578.71**	Rev.	Figure **3.7-4**

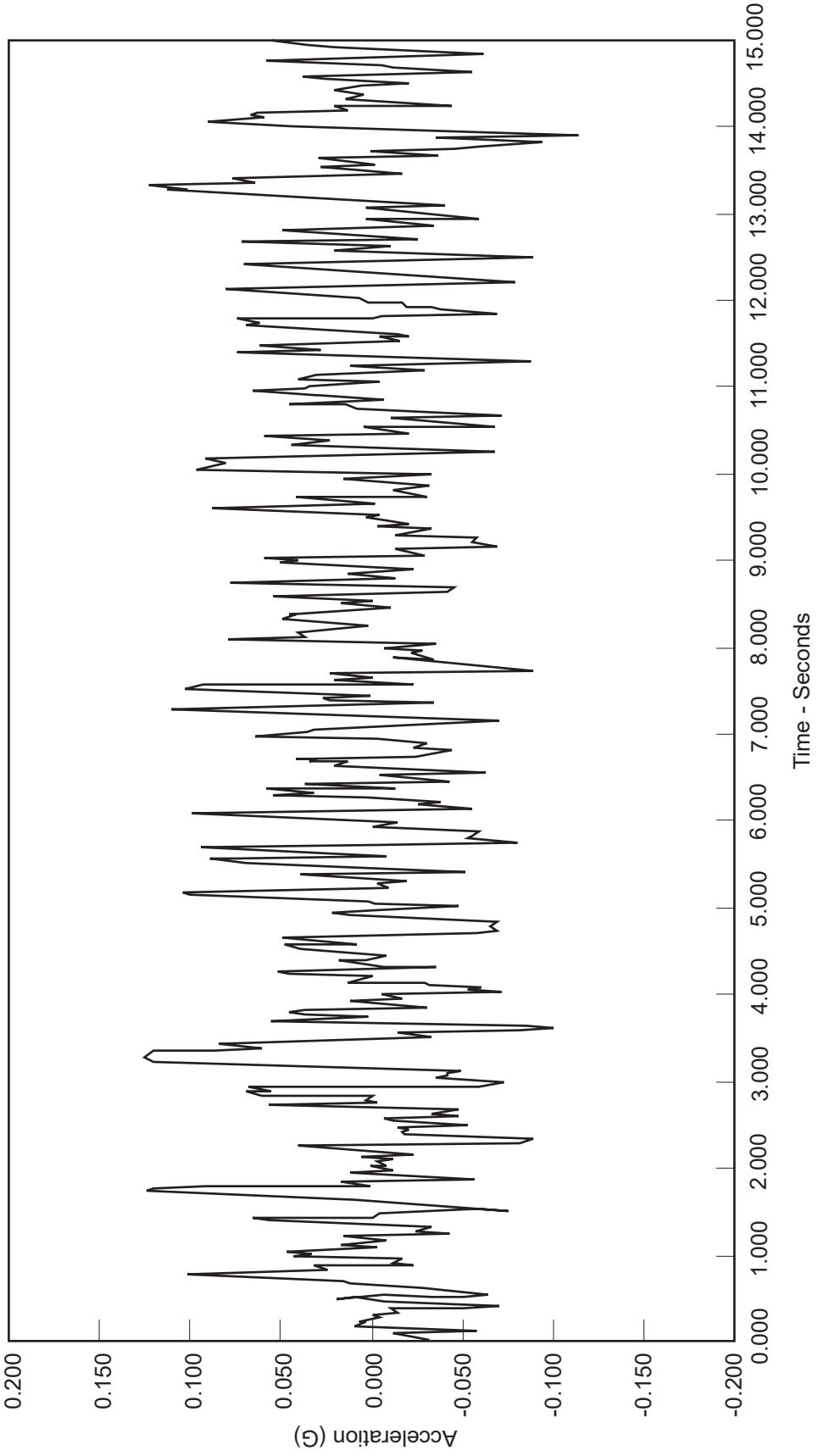

Columbia Generating Station Final Safety Analysis Report	**Synthetic Time History of Ground Motion Acceleration - Duration = 15 Sec OBE - Horizontal Component**		
	Draw. No. **010126.10**	Rev.	Figure **3.7-5**

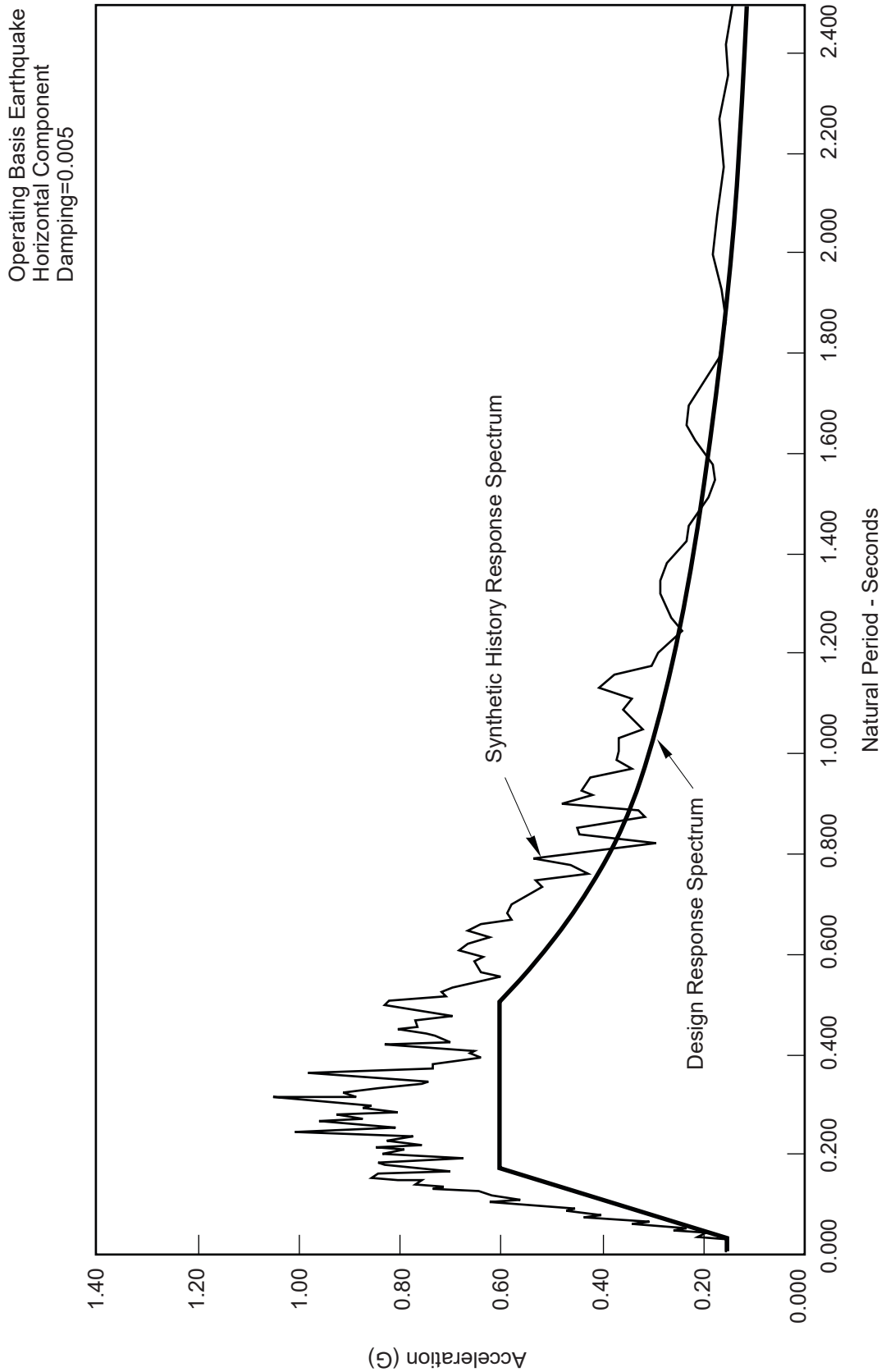

Columbia Generating Station **Final Safety Analysis Report**	**Ground Spectrum - Comparison Between Design and Synthetic Time History Response Spectra (Damping 0.005)**
	Draw. No. **010126.11** | Rev. **1** | Figure **3.7-6**

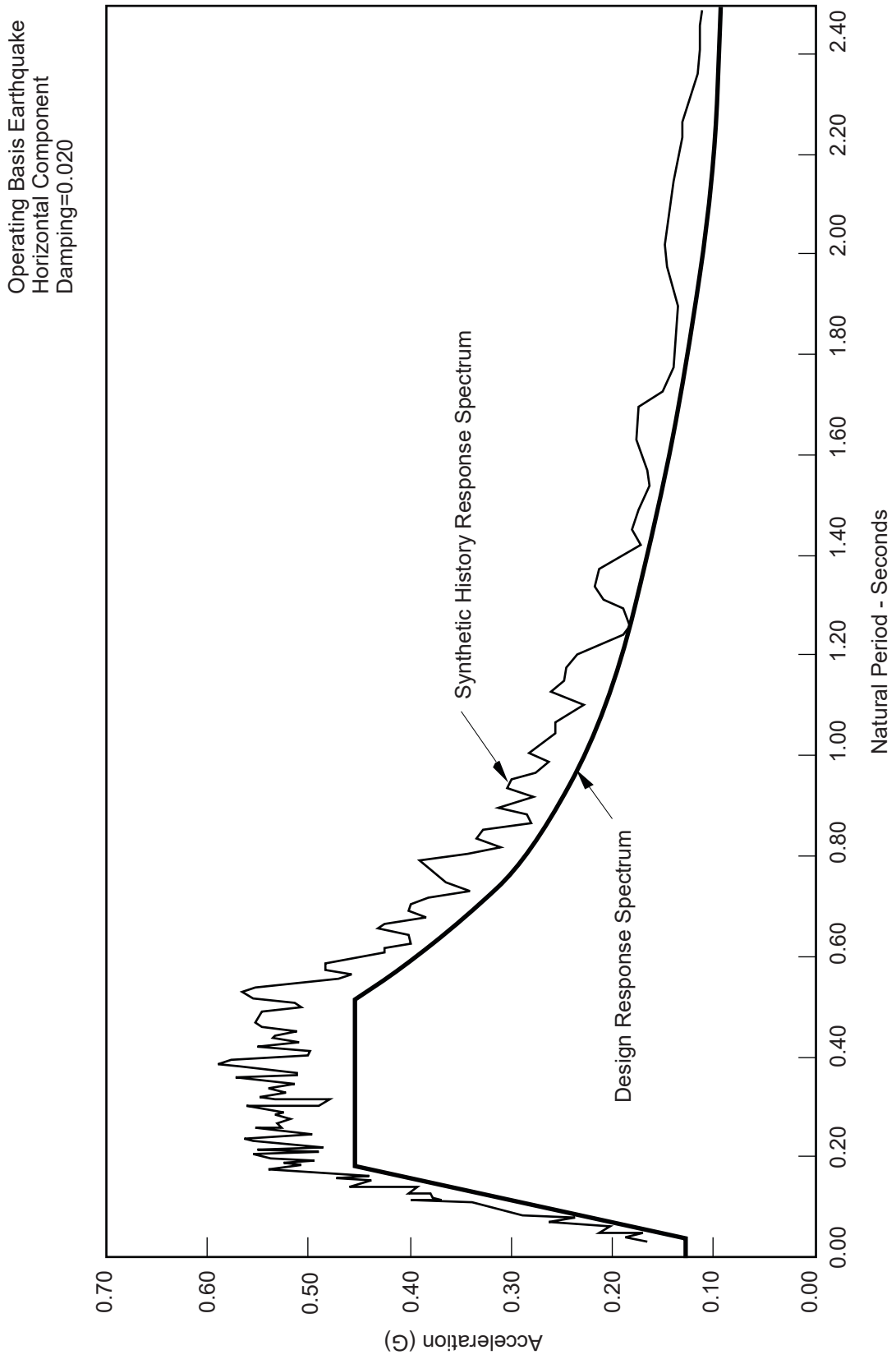

Columbia Generating Station Final Safety Analysis Report	**Ground Spectrum - Comparison Between Design and Synthetic Time History Response Spectra (Damping 0.020)**		
	Draw. No. **010126.12**	Rev.	Figure **3.7-7**

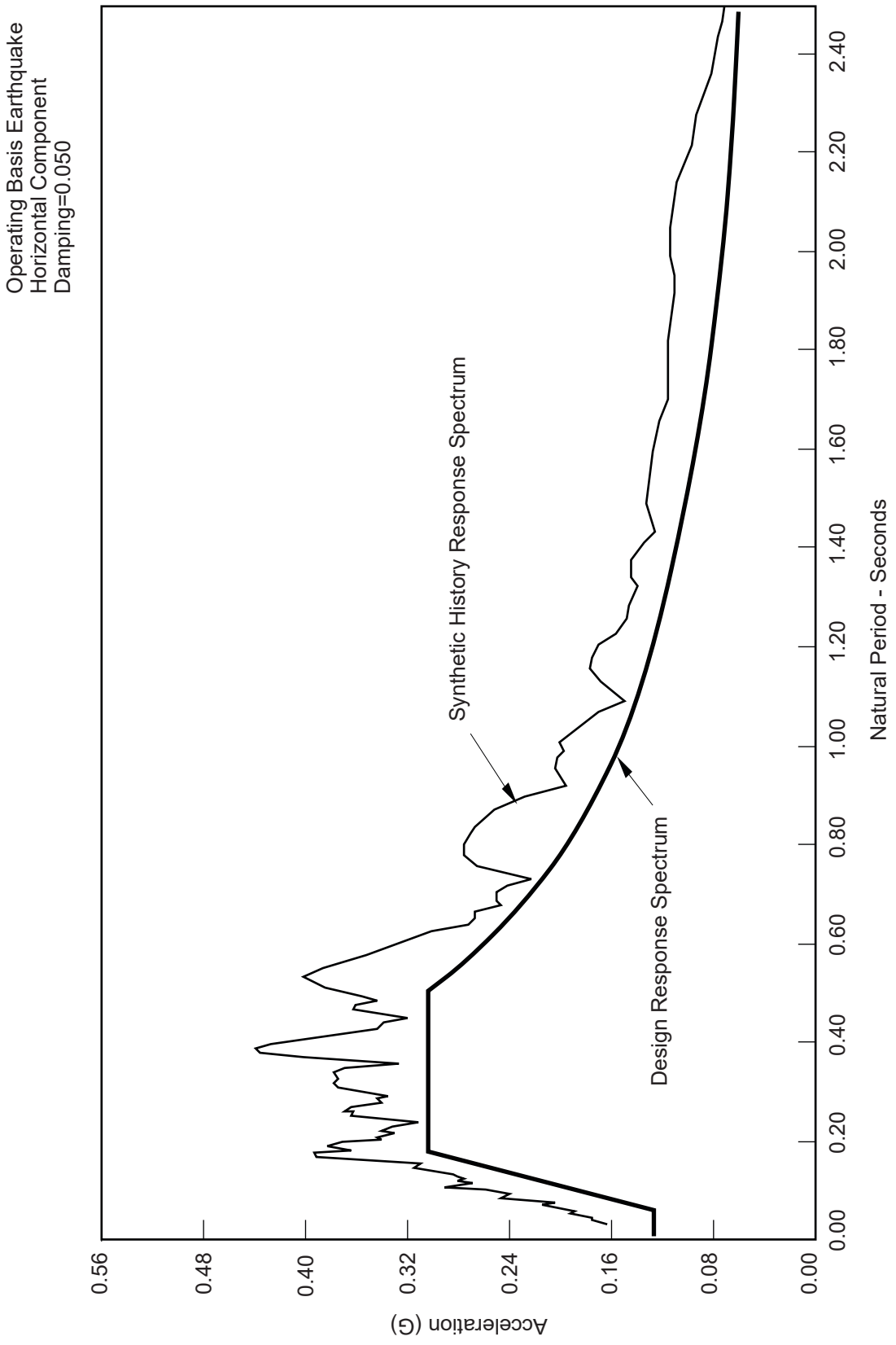

Columbia Generating Station Final Safety Analysis Report	**Ground Spectrum - Comparison Between Design and Synthetic Time History Response Spectra (Damping 0.050)**		
	Draw. No. **010126.13**	Rev.	Figure **3.7-8**

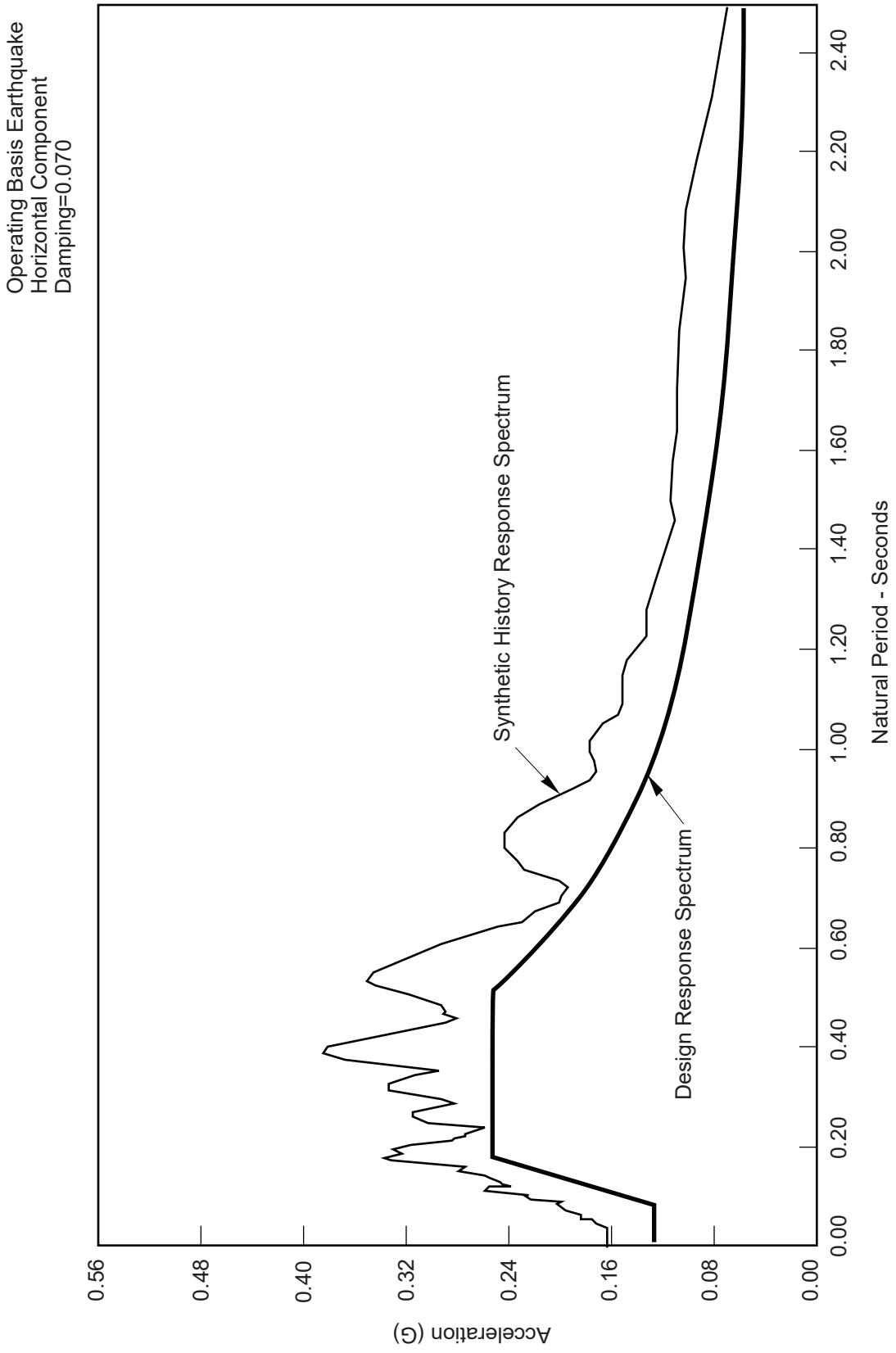

Columbia Generating Station Final Safety Analysis Report	Ground Spectrum - Comparison Between Design and Synthetic Time History Response Spectra (Damping 0.070)		
	Draw. No. 010126.14	Rev.	Figure 3.7-9

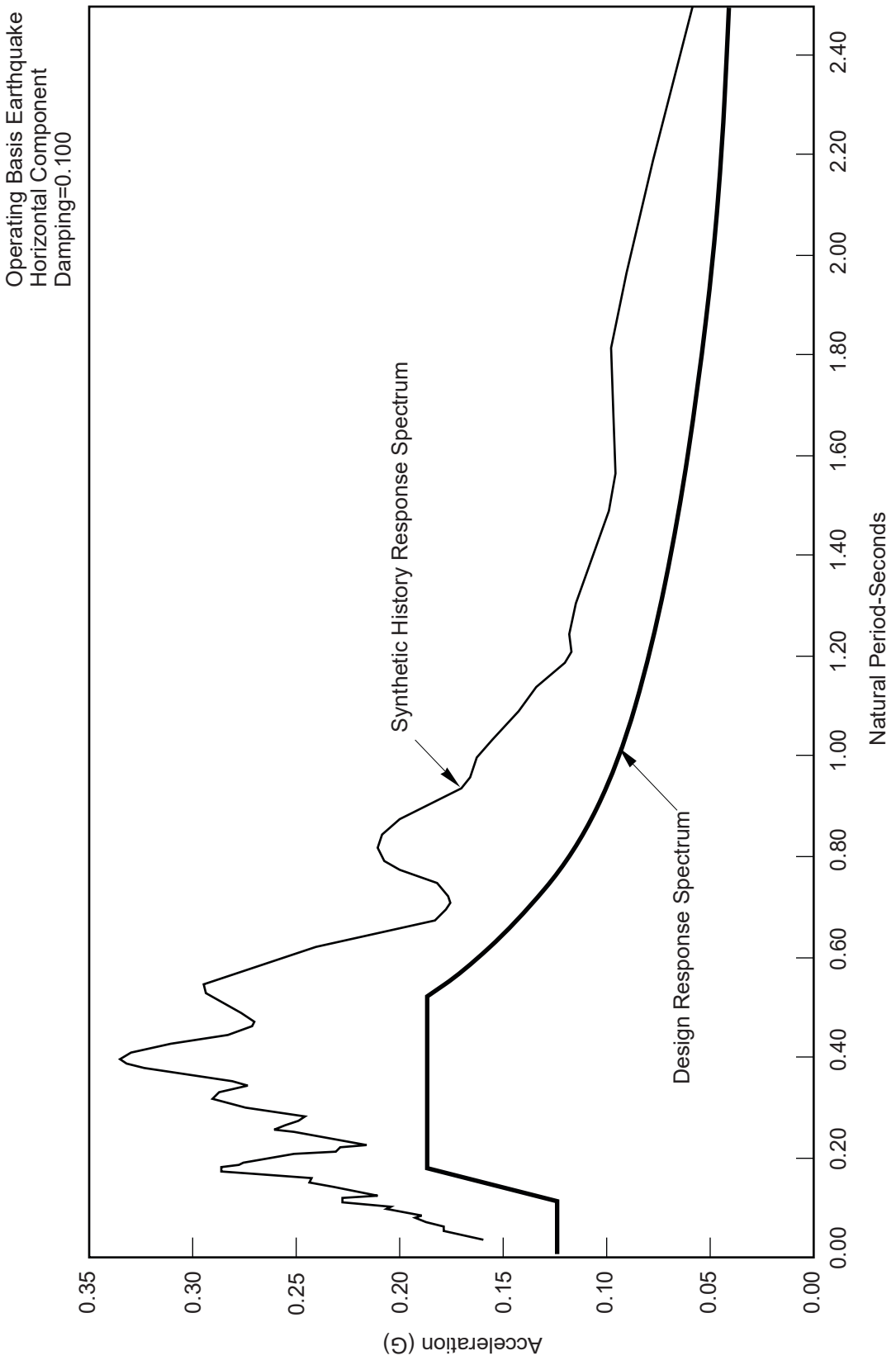

Columbia Generating Station Final Safety Analysis Report	**Ground Spectrum - Comparison Between Design and Synthetic Time History Response Spectra (Damping 0.100)**		
	Draw. No. **010126.15**	Rev.	Figure **3.7-10**

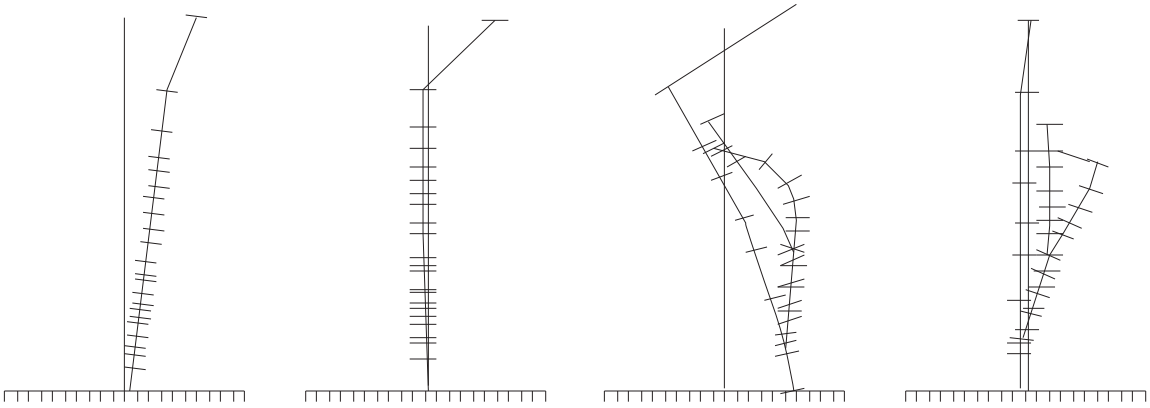

Freq. = 1.92 CPS — Mode 1

Freq. = 3.42 CPS — Mode 2

Freq. = 5.17 CPS — Mode 3

Freq. = 5.88 CPS — Mode 4

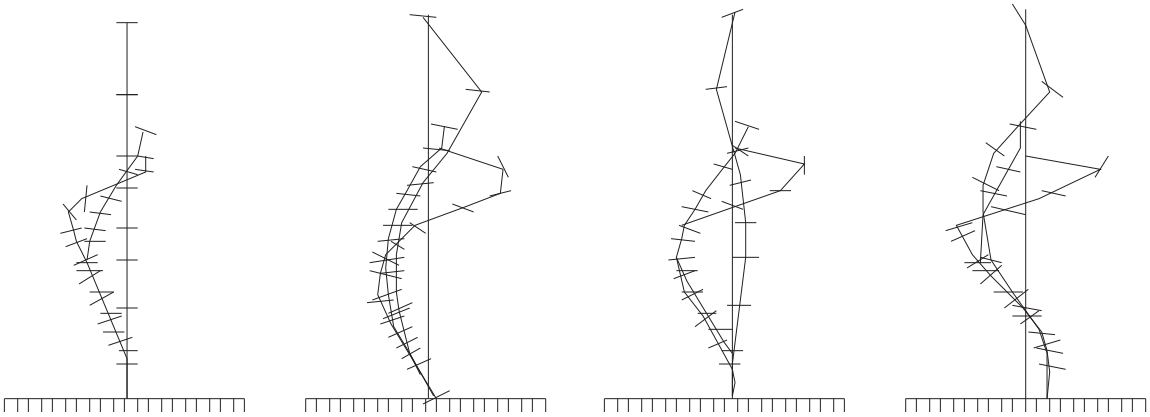

Freq. = 7.52 CPS — Mode 5

Freq. = 10.37 CPS — Mode 6

Freq. = 11.41 CPS — Mode 7

Freq. = 12.5 CPS — Mode 8

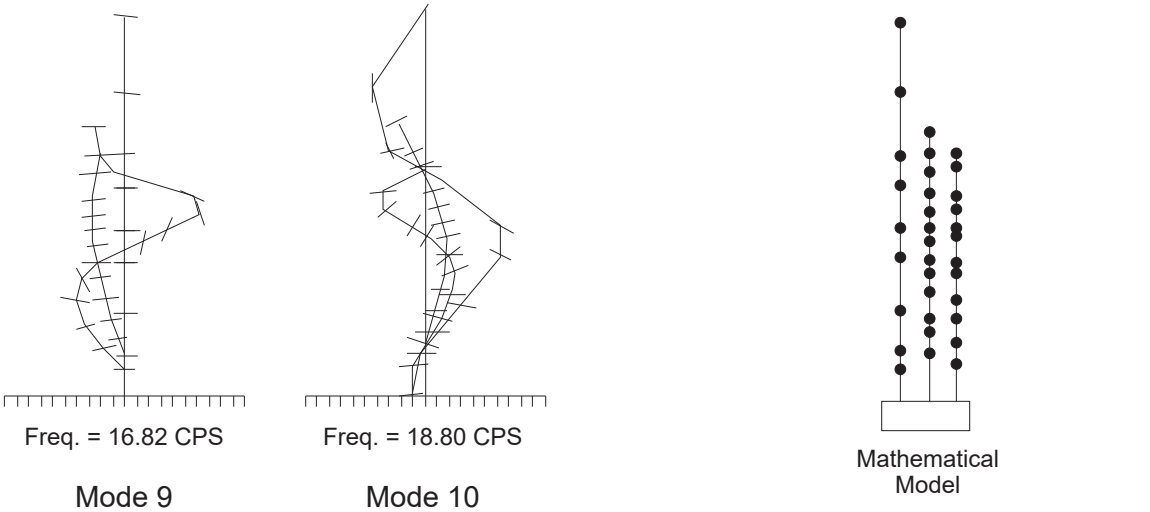

Freq. = 16.82 CPS — Mode 9

Freq. = 18.80 CPS — Mode 10

Mathematical Model

Columbia Generating Station Final Safety Analysis Report	Reactor Building - Seismic Analysis Summary of Horizontal Natural Frequencies and Mode Shapes		
	Draw. No. 010126.49	Rev.	Figure 3.7-11

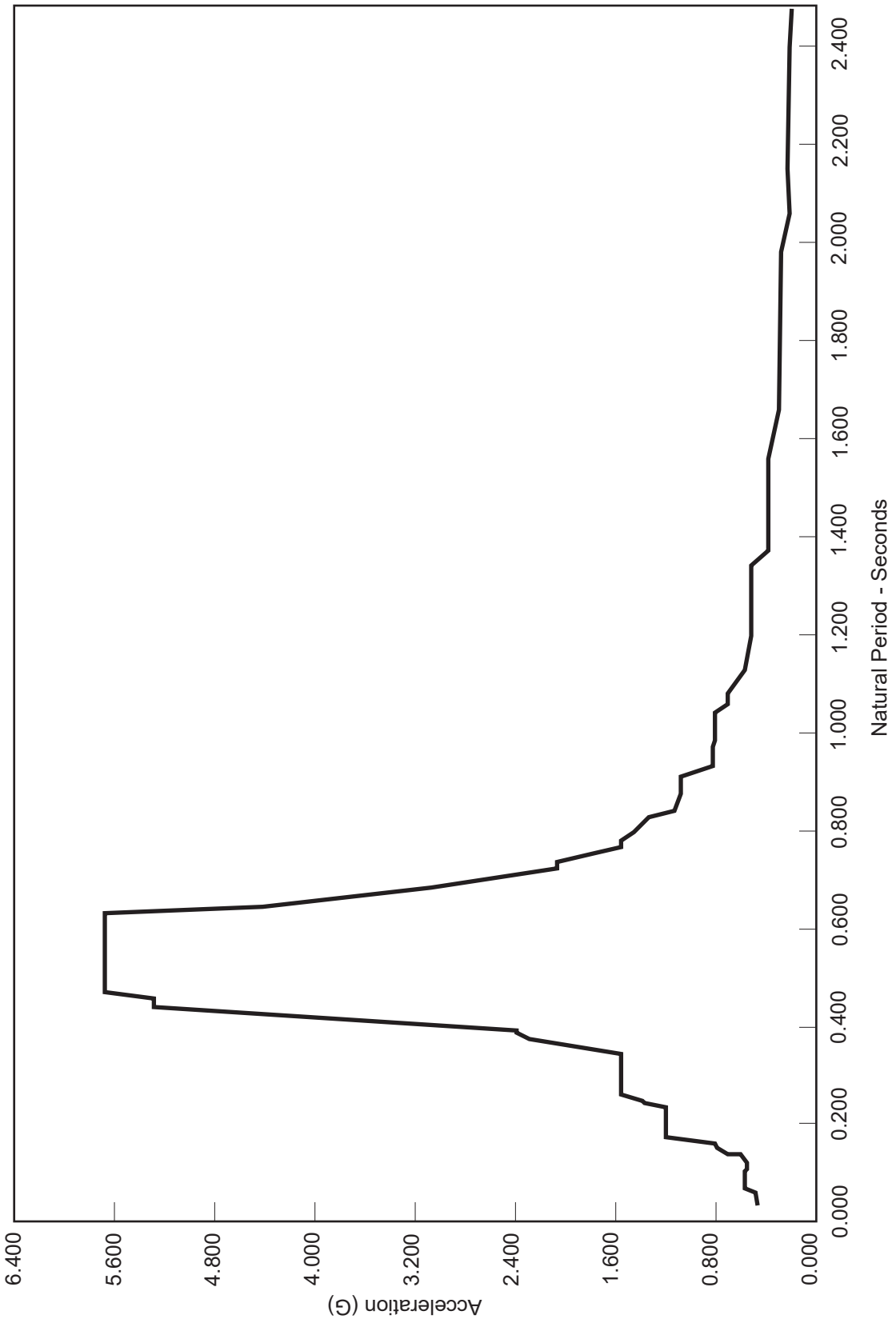

Columbia Generating Station Final Safety Analysis Report	Reactor Building Refueling Floor Response Spectrum - Operating Basis Earthquake, 0.005 Damping, Horizontal NS and EW		
	Draw. No. 010126.02	Rev.	Figure 3.7-12

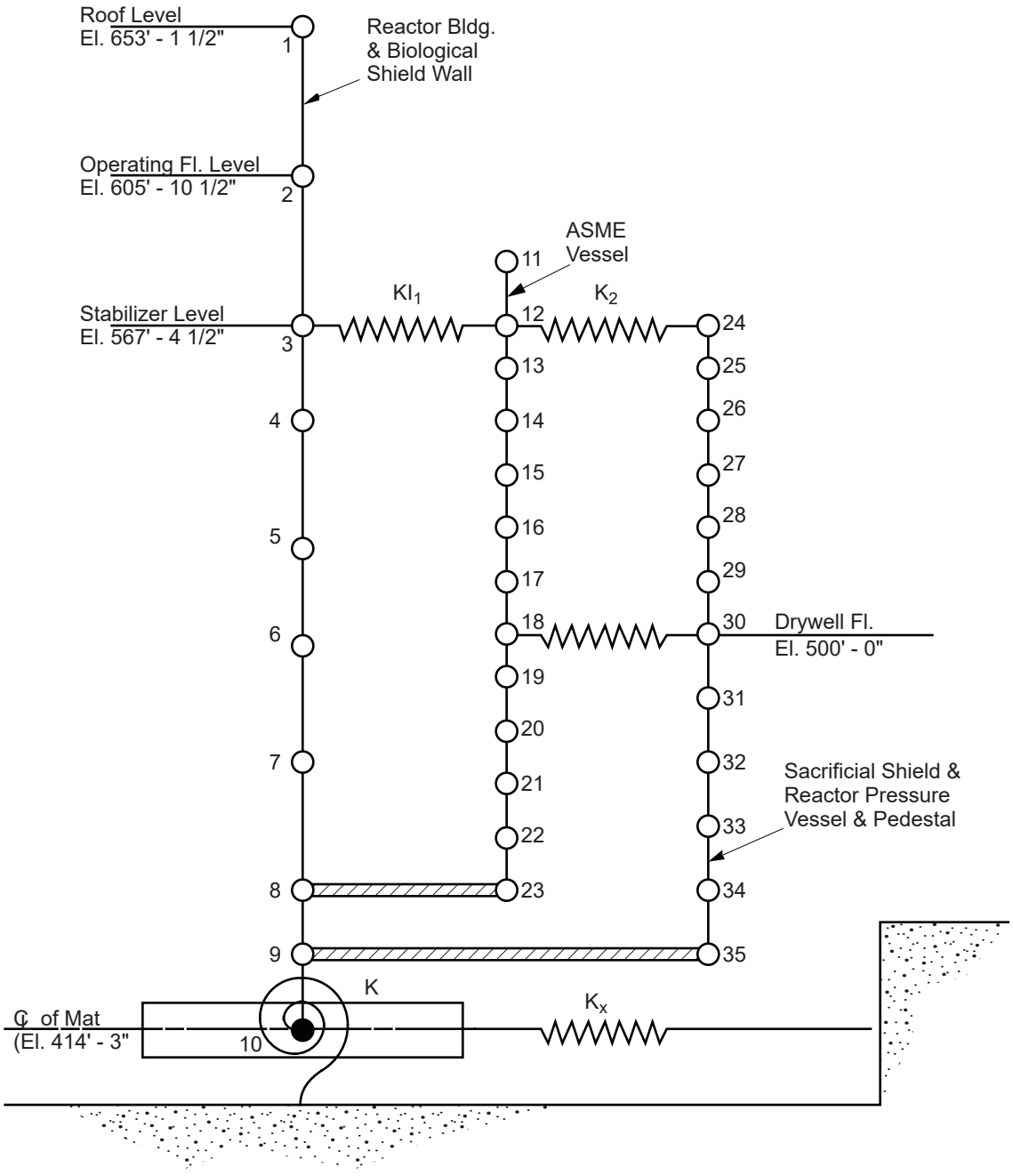

Columbia Generating Station **Final Safety Analysis Report**	**Mathematical Model of Reactor Building - Horizontal Input Motion**		
	Draw. No. 990306.65	Rev.	Figure 3.7-13.1

Form No. 960690

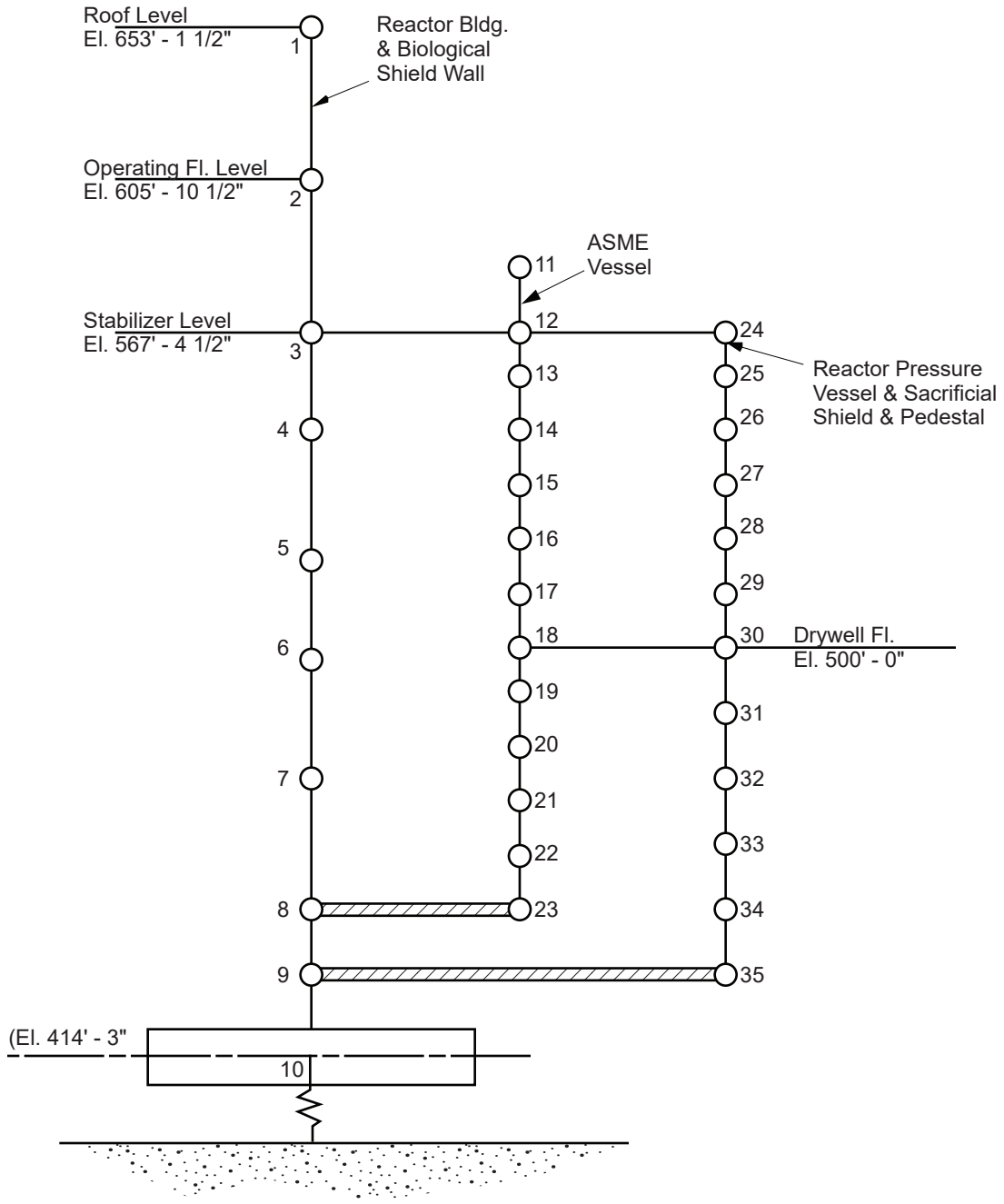

Columbia Generating Station **Final Safety Analysis Report**	**Mathematical Model of Reactor Building - Vertical Input Motion**		
	Draw. No. 990306.66	Rev.	Figure 3.7-13.2

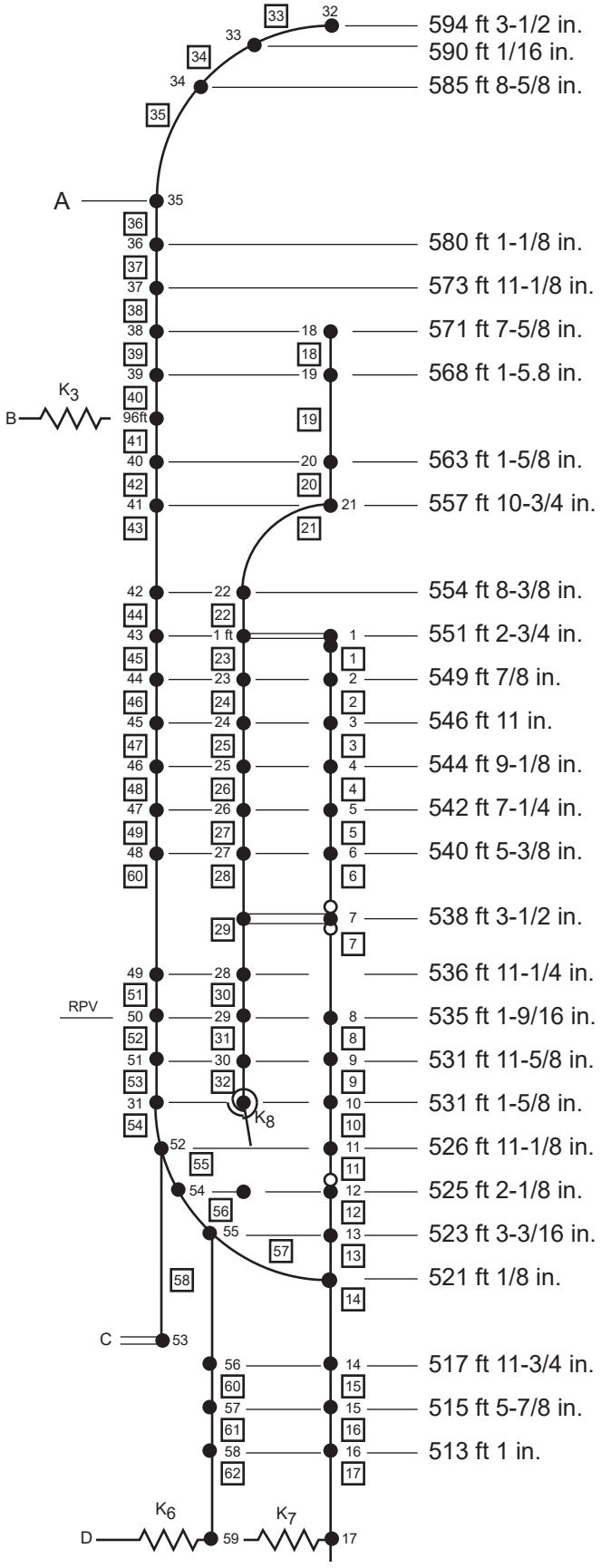

Columbia Generating Station Final Safety Analysis Report	Reactor Pressure Vessel and Internals Seismic Model		
	Draw. No. 910402.16	Rev.	Figure 3.7-14

Form No. 960690

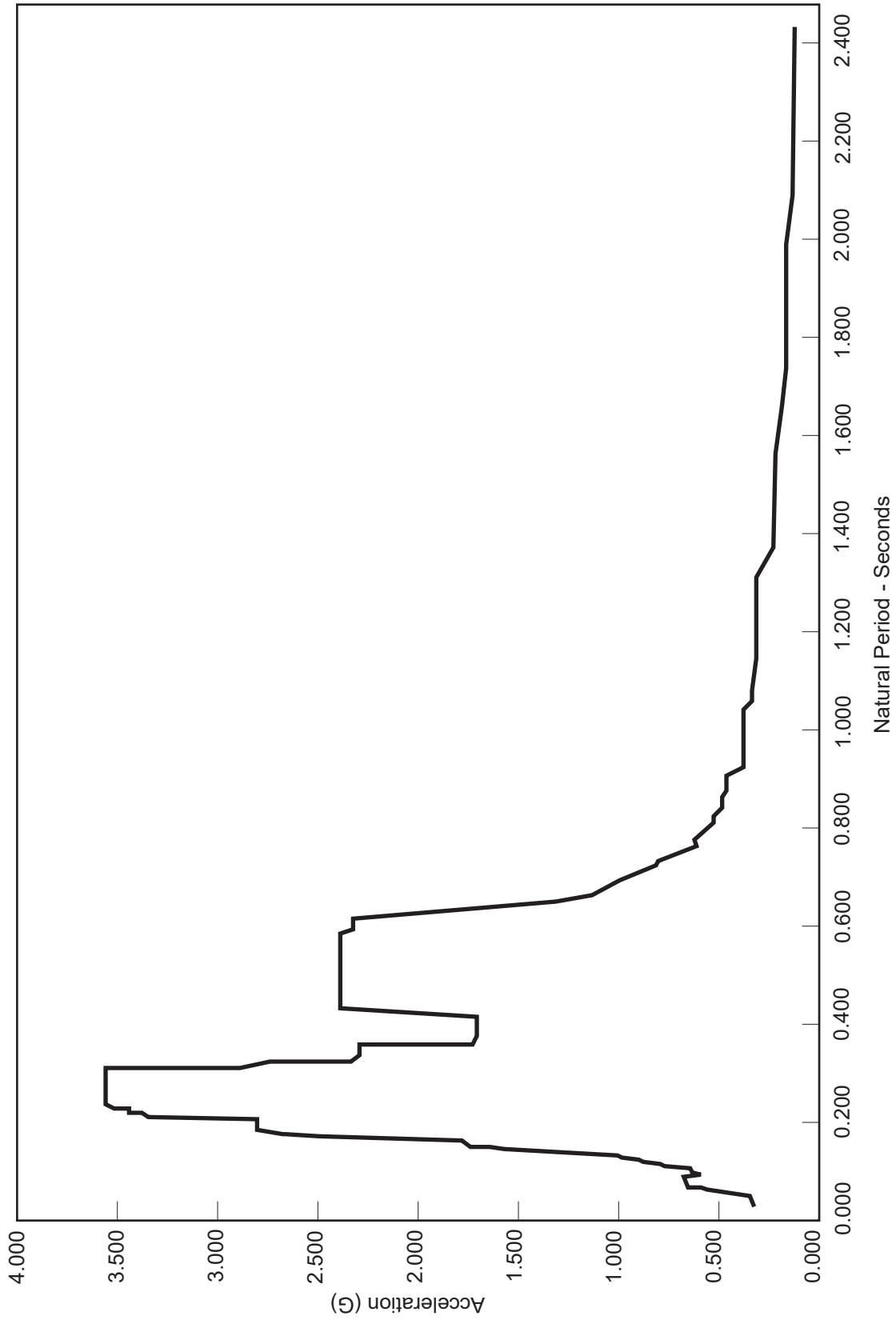

Columbia Generating Station Final Safety Analysis Report	Reactor Building Refueling Floor Response Spectrum - Operating Basis Earthquake, 0.005 Damping, Vertical		
	Draw. No. 010126.03	Rev.	Figure 3.7-15

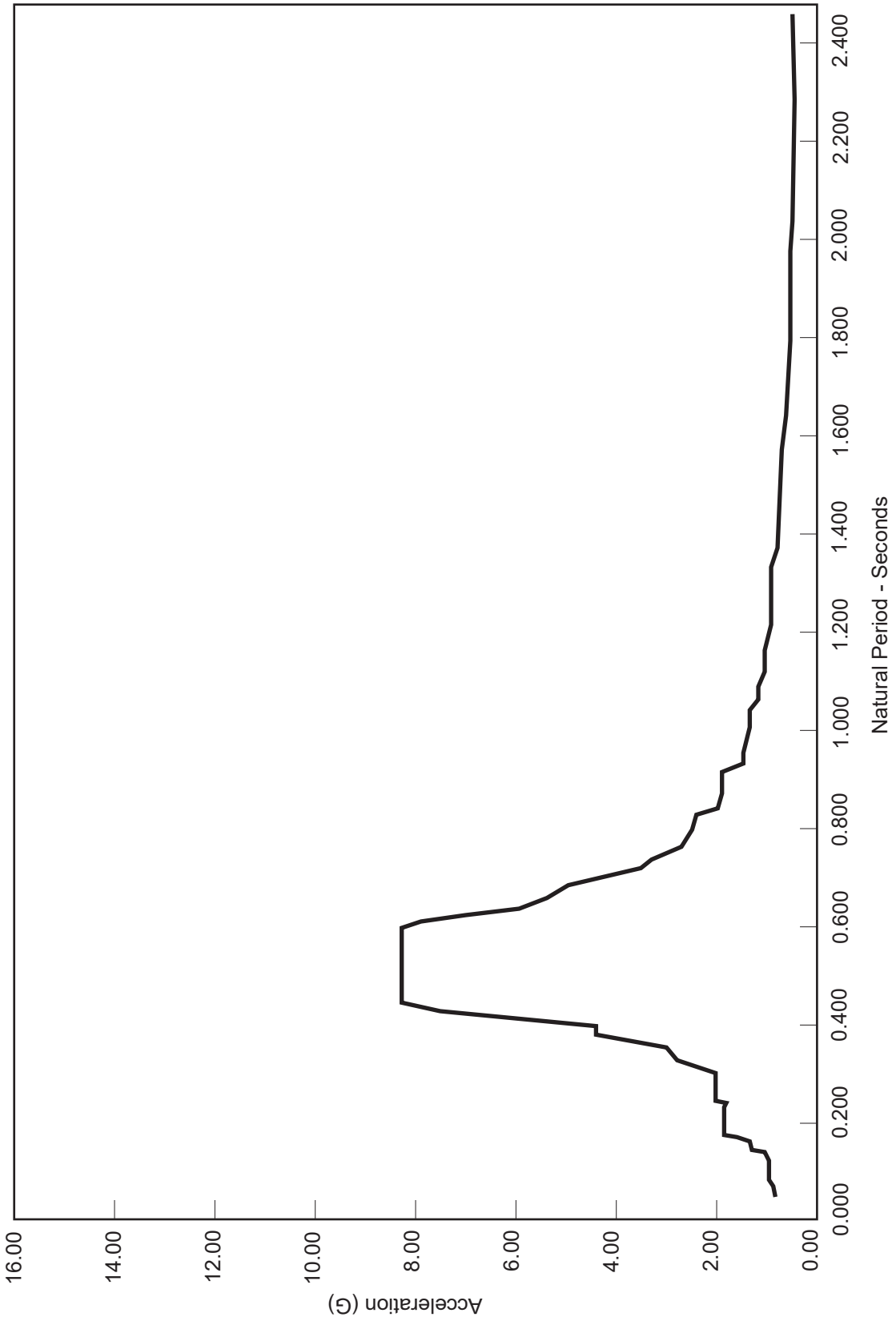

Columbia Generating Station Final Safety Analysis Report	Reactor Building Refueling Floor Response Spectrum - Safe Shutdown Earthquake, 0.01 Damping, Horizontal NS and EW		
	Draw. No. 010126.04	Rev.	Figure 3.7-16

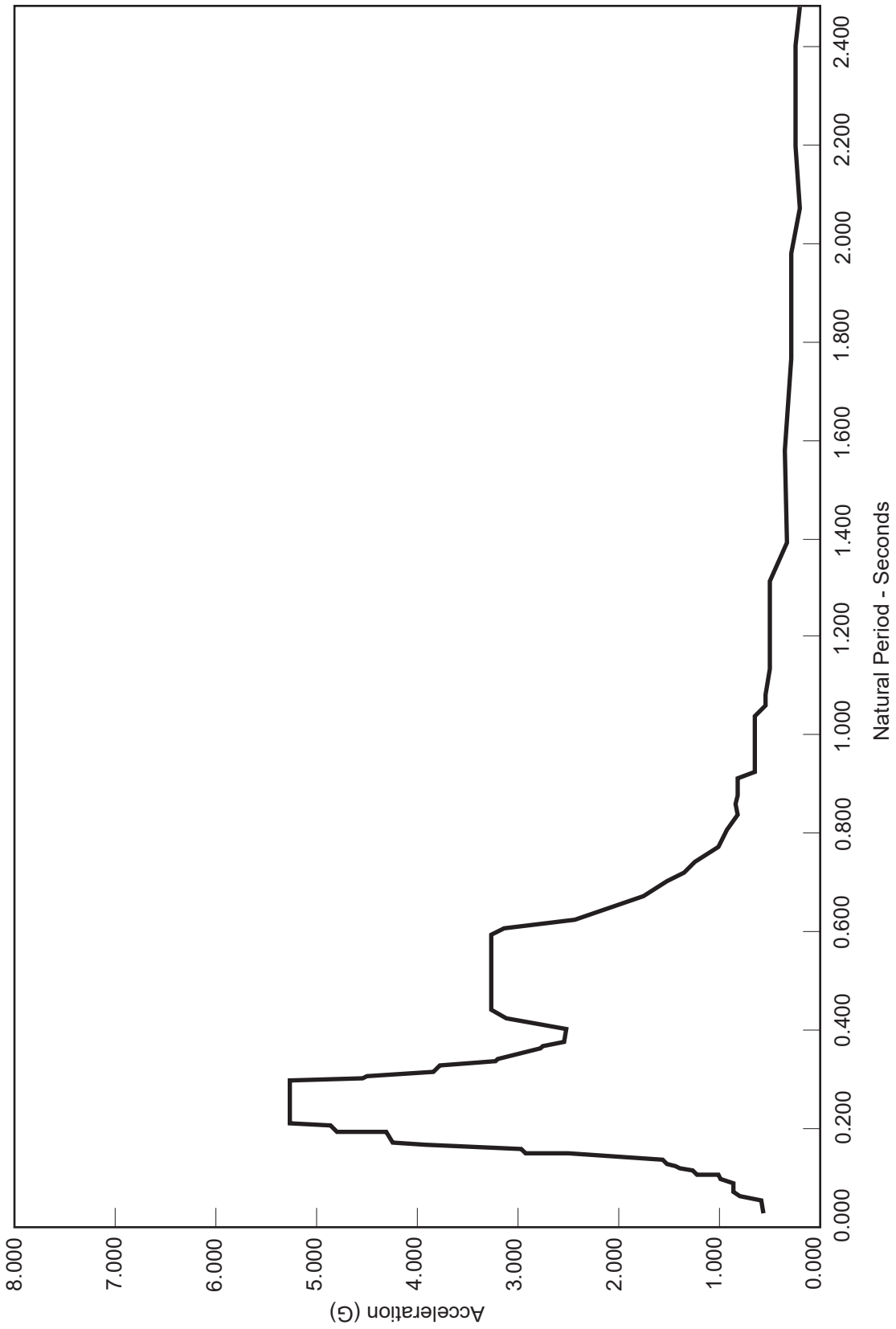

Columbia Generating Station Final Safety Analysis Report	Reactor Building Refueling Floor Response Spectrum - Safe Shutdown Earthquake, 0.01 Damping, Vertical		
	Draw. No. 010126.06	Rev.	Figure 3.7-17

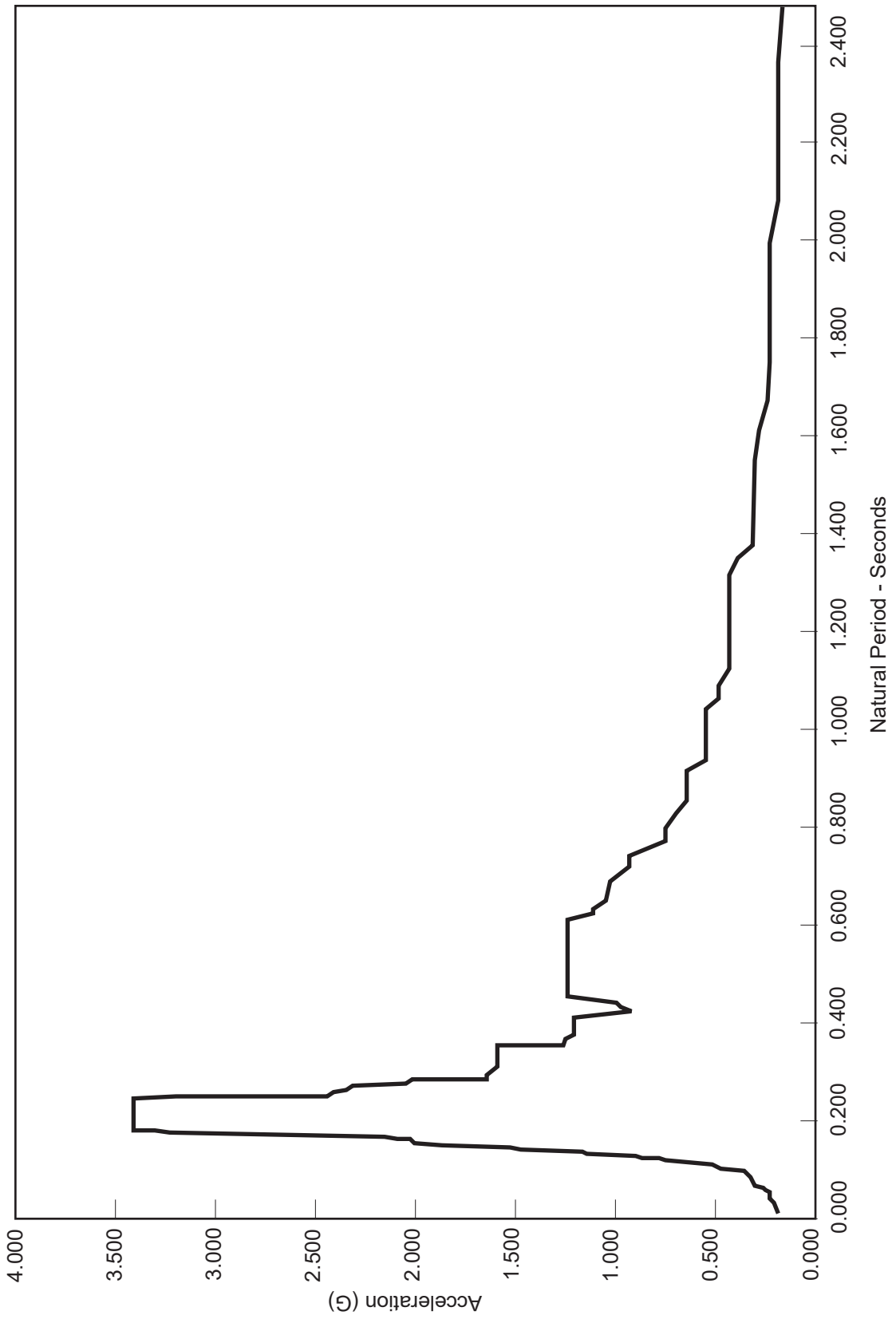

Columbia Generating Station Final Safety Analysis Report	Reactor Building Mat Response Spectrum - Operating Basis Earthquake, 0.005 Damping, Horizontal NS and EW		
	Draw. No. 010126.05	Rev.	Figure 3.7-18

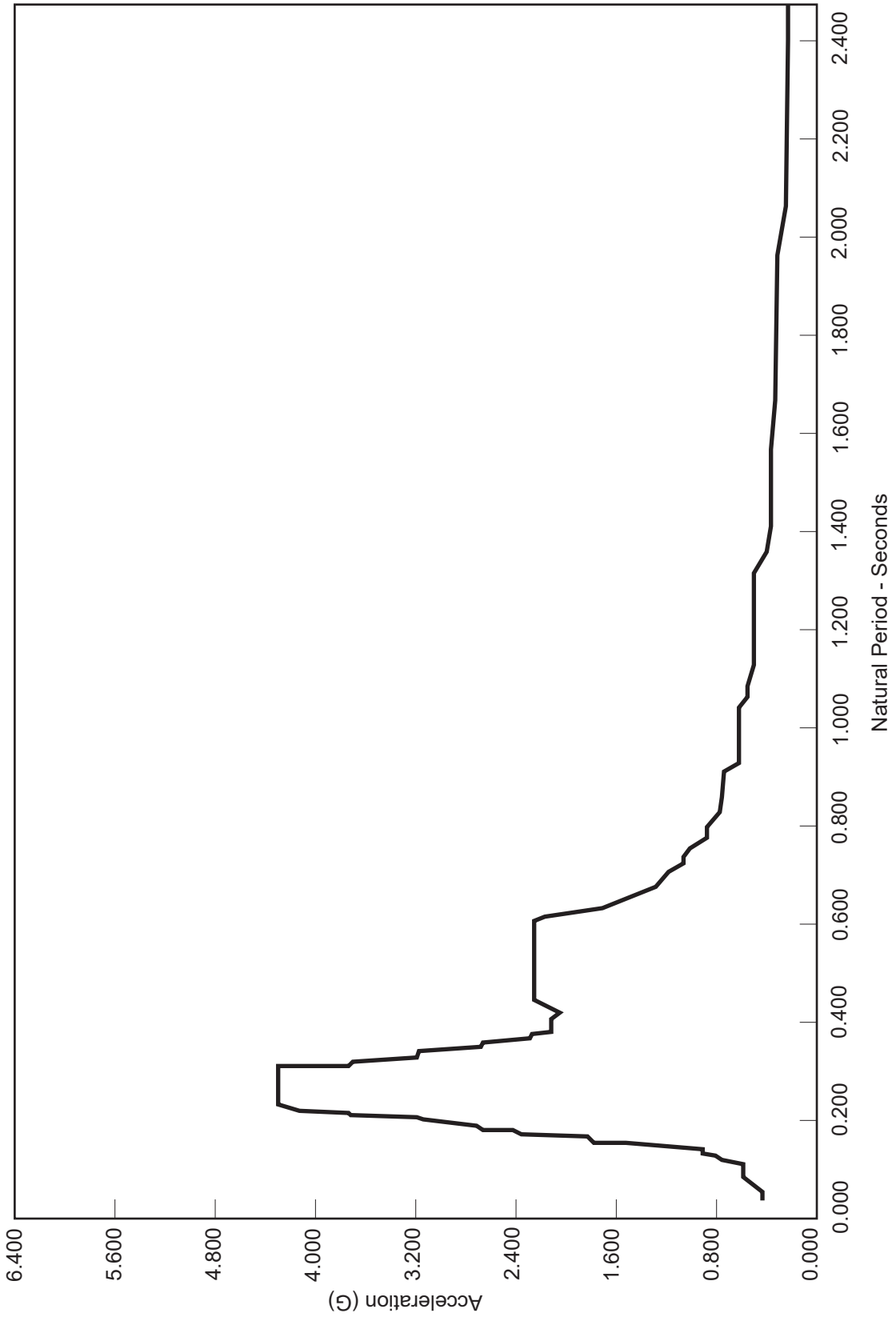

Columbia Generating Station Final Safety Analysis Report	Reactor Building Mat Response Spectrum - Operating Basis Earthquake, 0.005 Damping, Vertical		
	Draw. No. 010126.07	Rev.	Figure 3.7-19

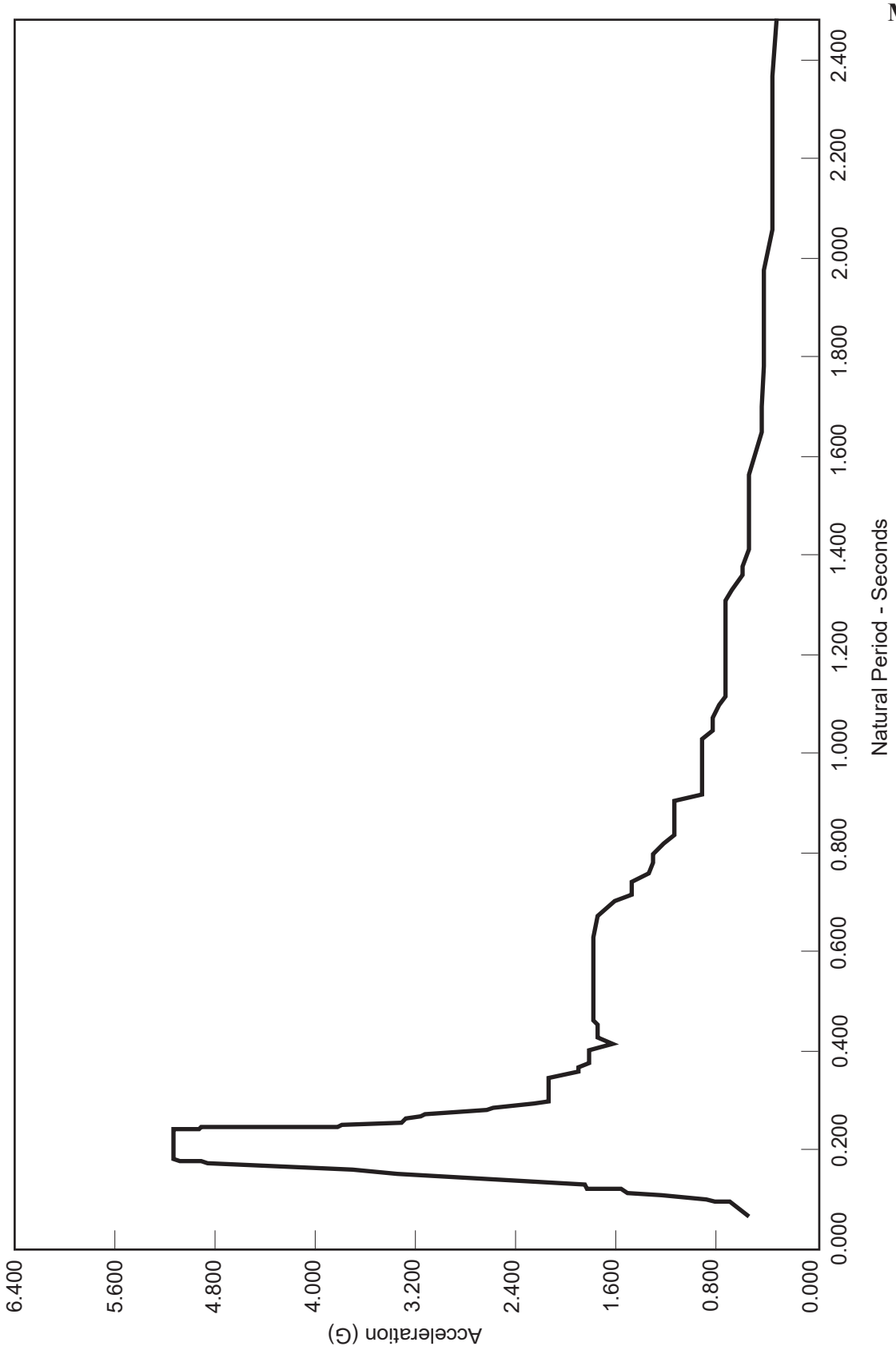

Columbia Generating Station Final Safety Analysis Report	**Reactor Building Mat Response Spectrum - Safe Shutdown Earthquake, 0.01 Damping, Horizontal NS and EW**		
	Draw. No. **010126.08**	Rev.	Figure **3.7-20**

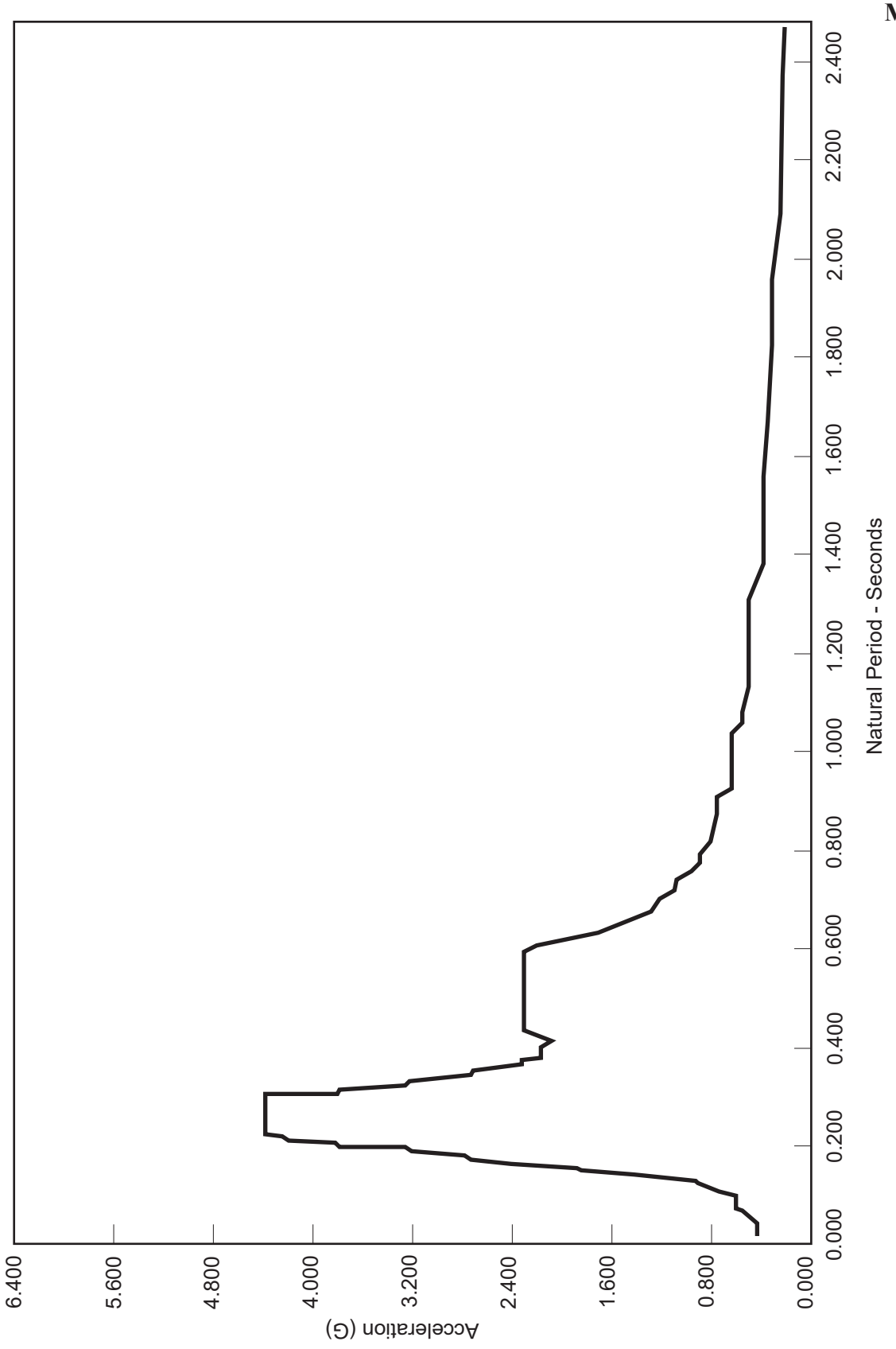

Columbia Generating Station Final Safety Analysis Report	**Reactor Building Mat Response Spectrum - Safe Shutdown Earthquake, 0.01 Damping, Vertical**		
	Draw. No. **010126.09**	Rev.	Figure **3.7-21**

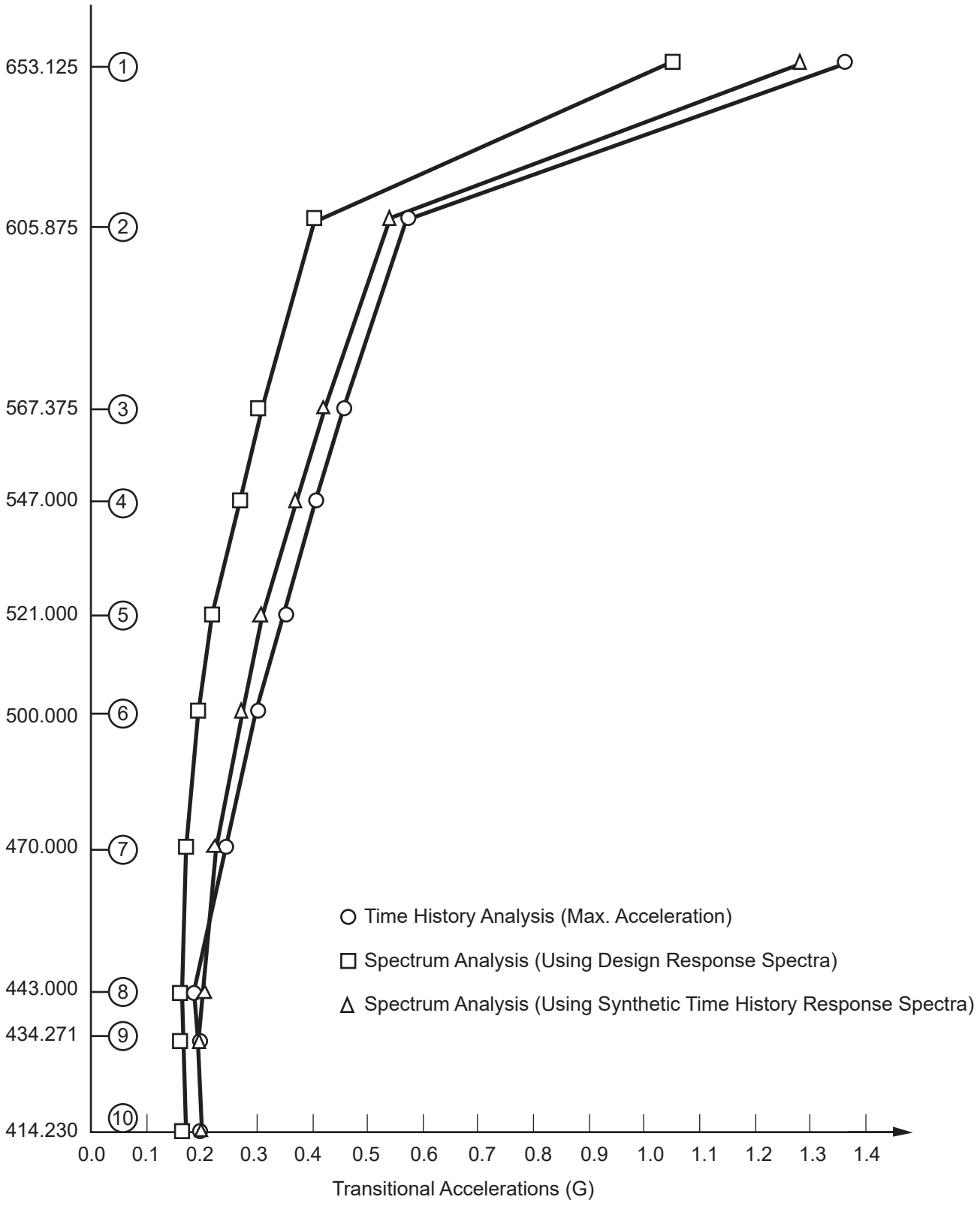

Columbia Generating Station Final Safety Analysis Report	Reactor Building-Seismic Analysis Comparison of Responses		
	Draw. No. 910402.17	Rev.	Figure 3.7-22

3.8 DESIGN OF SEISMIC CATEGORY I STRUCTURES

The nuclear steam supply system (NSSS) is housed in a steel primary containment vessel that has the ability to function as an independent structure. The primary containment vessel is housed in a reactor building also containing fuel storage and handling equipment and equipped with an overhead crane. The primary containment vessel for the NSSS is designed to confine the effects of a postulated nuclear accident and to limit the discharge of radioactive products to within levels specified in 10 CFR Part 50.67.

The Seismic Category I structures, which are part of a complex of buildings in close proximity to each other, are the reactor building, the diesel generator building, and portions of the radwaste and control building. The portions of the radwaste and control building which are Seismic Category I are the radwaste area and the control room tower. The radwaste area encompasses the foundation mat, the walls and all internal structures from the top of mat el. 437 ft to and including the reinforced-concrete slab at el. 467 ft. The control room tower consists of the vertical portion of the building encompassing the area of the control room.

The turbine generator building is a modified non-Category I seismic structure which is dynamically analyzed and designed to withstand the effects of an safe shutdown earthquake (SSE) and maintain its structural integrity thus providing adequate protection for the portions of the steam system designed as Seismic Category I, as defined in Regulatory Guide 1.29, Revision 3.

The reactor building consists of a dual barrier: the steel primary containment vessel and the reactor building which provides secondary containment. The primary containment vessel contains the drywell, suppression chamber, structural floor separating the drywell from the suppression chamber, sacrificial shield wall (SSW), and reactor pedestal. The reactor building secondary containment encloses the biological shield wall, spent fuel storage pool, dryer-separator pool, and the reactor well pool.

Seismic Category I structures that are not part of the building complex are two adjacent spray ponds, each provided with an integrally constructed standby service water pump house, and the condensate storage tank retaining area.

The major structures in the reactor building and principal dimensions are shown in Figures 3.8-1, 3.8-2, and 3.7-13. The seismic analysis methods and models used to obtain seismic loads and floor response spectra, soil/structure interaction, the damping values used, and the seismic input at the base of the buildings are discussed in Section 3.7.

Although the reactor building, radwaste and control building, diesel generator building, and turbine generator building are in close proximity to each other, they are supported on separate foundation mats. No interaction between these mats was considered. Each mat and its

superstructure was analyzed separately for soil-structure interaction due to horizontal and vertical earthquake motions.

The seismic design of the buildings was based on a parametric study for a wide range of soil properties. Thus, uncertainties in the soil properties and frequencies are adequately accounted for in the design.

Each of the Seismic Category I structures in the complex is physically separated from the other, above and below grade, in order to accommodate differential seismic displacements and thermal expansion. Abutting walls between buildings, which are separated by only a few inches, are designed to resist wind forces and tornado effects including tornado-generated missiles and pressure drop. The tornado and wind forces on roofs and external walls were computed as indicated in Section 3.3.

The seismic analysis of the reactor building included interaction between soil, foundation mat, and superstructures using lumped mass-spring, discrete models as described in Section 3.7. Conservative soil and structure damping parameters are included in the model. The response spectrum and time-history methods of analysis were used to determine the responses of the structures.

Time histories of displacements and accelerations at the top of the reactor building mat and at the lumped masses, which usually represent floor slabs, are the main output of the time-history analysis. This output was used as input for time-history analyses, as required, of the main components of the NSSS (the reactor vessel and internals) as well as to generate floor response spectra which were used in the seismic analyses and design of safety-related systems, equipment, and components housed in the Seismic Category I structures. In addition, moments and shears were obtained for comparison with results obtained from response spectrum analyses.

Response spectrum analyses were used for determining shears and moments for the final design of each of the structural components of the reactor building. These are discussed in Sections 3.8.2, 3.8.3, 3.8.4, and 3.8.5.

3.8.1 CONCRETE CONTAINMENT VESSEL (Not Applicable to CGS)

Columbia Generating Station (CGS) has a steel containment vessel (see Section 3.8.2).

3.8.2 STEEL CONTAINMENT VESSEL (ASME Class MC Components)

The capability of the primary steel containment vessel to withstand the hydrodynamic effects resulting from actuation of safety/relief valves (SRV) and specified loads associated with postulated loss-of-coolant accidents (LOCAs), and the applicable modifications were addressed in the Plant Design Assessment Report (DAR) for SRV and LOCA Loads. See Appendix 3A

which identifies the loads and effects which are most important to the design of the CGS plant and describes the CGS plant capability with respect to the hydrodynamic loading phenomena during SRV actuations and postulated LOCA events.

3.8.2.1 Description of the Primary Containment Vessel

The basic safety objective of the primary containment system is to provide the capability in the event of a postulated LOCA of limiting the release of fission products to the plant site environs so that offsite doses are in compliance with the limits specified in 10 CFR Part 50.67.

To meet the basic safety objective, several contributory objectives are achieved by the system or one or more of its components, including

a. Capability to withstand the peak transient pressures and temperatures which could occur due to postulated design basis LOCA; i.e., a mechanical failure of the reactor primary system equivalent to the circumferential rupture of one of the reactor coolant recirculation system pipes,

b. Capability to maintain the functional integrity of the primary containment indefinitely after the postulated design basis LOCA,

c. The primary containment design permits filling the primary containment system drywell with water to a level above the reactor core,

d. The primary containment system is protected against missiles from internal or external sources and excessive motion of pipes, which could directly or indirectly endanger the integrity of the primary containment,

e. Capability to withstand fluid jet forces associated with the flow from the postulated rupture of any pipe within the containment,

f. Capability of limiting leakage during and following the postulated design basis accident to values less than leakage rates which would result in offsite doses greater than the reference doses in 10 CFR Part 50.67,

g. Means of conducting the flow from postulated pipe ruptures, including the design basis rupture of a recirculation line to the pressure suppression pool, to rapidly condense the steam portions of the flow so that the peak transient pressure is less than containment design pressure, to distribute such flow uniformly throughout the pool and to limit pressure differentials between the drywell and the pressure chamber during the various postaccident cooling modes, and

h. Capability for rapid isolation of the primary containment to provide a containment barrier sufficient to maintain leakage within permissible limits.

The primary containment vessel is a free-standing steel pressure vessel. It utilizes the pressure suppression technique through the Mark II over-under configuration. The primary containment vessel and its appurtenances comply with the requirement of the ASME Code, Section III, Subsection NE-Class MC Components, 1971 Edition through Summer 1972 Addenda. It is designed to resist all normal operating loads, loads resulting from the postulated design basis accident as well as those loads associated with the operating basis earthquake (OBE) and SSE. The design also accounts for stresses induced by thermal expansion. The drywell floor which divides the drywell and suppression chamber is a reinforced-concrete slab supported by steel beams and concrete columns. The drywell floor to primary containment vessel gap is closed off by means of a floor seal shown in Figure 3.8-3. This configuration permits unrestrained expansion of the containment shell under differential thermal expansion and pressure loadings. The containment vessel is enclosed in a reinforced-concrete biological shield wall for shielding purposes and is separated from the reinforced concrete by an annulus of compressible isolation material, approximately 2 in. thick. The concrete wall thickness is governed by shielding requirements but also serves as a support for the reactor building floors. Shielding over the top of the drywell is provided by removable, segmented, reinforced-concrete shield plugs. The drywell is located directly above the wetwell. The drywell configuration is basically a frustum of a cone with removable ellipsoidal top closure head. The suppression chamber (wetwell) is cylindrical with an ellipsoidal base. The primary containment vessel is anchored to the concrete mat foundation. The bottom of the suppression chamber is lined on the inside with reinforced concrete. The concrete mat foundation under the suppression chamber is a common foundation supporting the steel primary containment vessel, including all equipment and structures therein, and the reactor building of which the primary containment vessel is a part.

The drywell floor serves as a pressure barrier between the drywell and suppression chamber. The top closure head of the drywell is bolted to a steel flange attached to the top of the containment vessel. The drywell houses the reactor vessel and its associated primary system. The primary function of the drywell is to contain the effects (i.e., mass and radiation) of a LOCA, and to direct the steam released from a primary system pipe break into the suppression chamber pool to limit the total pressure rise during a LOCA.

Under normal operating condition (normal condition) a fatigue analysis is performed in accordance with the requirements of ASME Code Section III.

Under emergency condition, the jet impingement force of 534 kips as outlined in Section 3.8.2.3 might cause local yielding of the drywell shell. An analysis (plastic analysis in accordance with the requirements of the ASME Code Section III) demonstrates that rupture will not occur. Local deformation caused by the jet impingement force does not affect the leak tightness of the containment vessel.

The analysis of the jet impingement effects on the primary containment vessel (Reference 3.8-21) is summarized as follows:

a. Phase 1 - The conical region of the containment shell was modeled and a general shell of revolution analysis was performed using the HYBOS computer program (Reference 3.8-22).

Two critical locations were chosen for independent application of the jet force. One, located approximately in the middle of two box ring stiffeners, is a logical candidate for maximum deflection; the second, located on the thinnest nearly adjacent to a stiffener, is a location where largest curvatures could occur if the shell contacts the concrete biological shield wall spaced 2 in. from the shell.

Since the impinged area (429 $in.^2$) subtends only a small arc of the total periphery, a Fourier harmonic expansion of 11 terms is used to represent the jet forces of 534 kips.

The response to gravity, static seismic, and design pressure loads were also computed. The results of the most severe combinations of the loads (Appendixes C and D of Reference 3.8-21) show that the shell will contact the concrete for either candidate jet force location; consequently the elastic analysis is not valid in the immediate area of the jet load. The largest computer stresses were found for the second location and exceeded yield; therefore, an elastic-plastic analysis was next performed for that critical region;

b. Phase II - A local finite element elastic-plastic model was analyzed using the DYPLAS computer program which is capable of treating nonlinear inelastic materials.

The boundaries of this model as shown in Figure 3.8-4 are structurally remote from the jet-impinged area, indicated by cross-hatching. The displacements from the general shell analysis, therefore, were used as displacement boundary conditions. Inelastic deformation, strains, and stresses were computed for all finite elements during selected steps of load applications; and

c. Stress evaluation was based on the ASME Boiler and Pressure Vessel (B&PV) Code, Section III, Subsection NE, Class MC Components, NE-3131.2 and Appendix F, 1974 edition.

3.1 Code Requirements

$P_m < \sigma_m$

$P_L < 1.5\ \sigma_m$

where

$\sigma m = 0.85 \times 0.7 \times S_u = 0.595\ S_u$

From Table I-1.1, for SA-516, Grade 70 Steel:

S_u - 70,000 psi at 345°F

Therefore:

σm - 41,650 psi

To meet code requirements:

$P_m < 41{,}650$ psi

$P_L < 62{,}475$ psi

3.2 Stress Evaluation

From Appendix J of Reference 3.8-21

$(P_m)max = 29{,}943$ psi $< 41{,}650$ psi

which occurs on upper edge of model (Figure 3.8-4)

$(P_L)max = 36{,}305$ psi $< 62{,}475$ psi

which occurs on the lower portion of the impinged region (Figure 3.8-4)

Therefore code requirements are met.

The ductility ratio is defined as the maximum response of an elasto-plastic structure to a prescribed loading function divided by the response of the same structure to the load at incipient plasticity. The maximum radial displacement at incipient plasticity was computed and is shown in computer Appendix I to Reference 3.8-21 as 0.4335 in. The maximum radial deflection of 2.0 in. was the spacing between shell and shield.

Thus the ductility ratio might be considered to be

$$2.00/0.4335 = 4.6$$

However, since the maximum deflection of the shell is limited by contact with the concrete of the biological shield; the ductility ratio here may not be as meaningful a design parameter as it is in other cases.

A more significant measure of structural integrity against cracking and ultimate leakage may be the most severe local principal cumulative strain.

The most severely strained metal lies on the outside surface of the vessel shell near node 67 as shown in Figure 3.8-4. This strain is the maximum inelastic cumulative strain based on a computed nonlinear strain distribution through the vessel wall. Its value is 4%.

Figure 3.8-5 shows the minimum elongation to failure of ASTM A516 Grade 70 steel as a function of temperature. Over the range of 70°F to 350°F this has a least value of 14.8%.

An estimate of the factor of safety may then be said to be

$$\text{F. S.} = \frac{14.8}{4.0} = 3.7$$

Although failure strains in complex strain fields do not correlate precisely with results of one-dimensional ductility tests, the factor of safety, as computed above, is deemed ample.

The criteria used in the seismic design of the containment system is based on the responses of the containment system to earthquake excitation. The responses are derived from the analysis of a mathematical model developed to represent the containment vessel. Section 3.7 outlines methods of analysis, modeling techniques, the seismic input, and the soil-structure interaction effects.

All ferrous materials of plates, forgings, castings, and pipes for ASME Code, Class MC with thickness greater than 5/8 in. are Charpy V-notch impact tested at 0°F in accordance with the ASME Code, Section III, Paragraph NE-2300. Materials for ASME Code, Class 1 components are impact tested in accordance with NB-2300. The drywell will not be pressurized or subjected to substantial stress at temperatures below 30°F.

The principal containment design parameters are listed in Table 3.8-1.

The physical dimensions of the steel primary containment vessel are

a. The diameter of the cylindrical portion at the base of the cone is approximately 86 ft,

b. The diameter at the top of the cone is approximately 39.5 ft and then narrows to 32 ft to carry the removable head,

c. Ellipsoidal bottom head with a ratio of 2:1 has an inside height of approximately 21.5 ft,

d. The removable ellipsoidal top closure head has an inside height of approximately 15.5 ft,

e. The drywell shell height is approximately 99 ft,

f. The suppression chamber shell height is approximately 72 ft, and

g. Overall shell height is approximately 171 ft.

The primary containment vessel shell plate thicknesses vary. Typical thicknesses are as follows:

a. Bottom ellipsoidal head: from 7/8 in. to 1.5 in.,
b. The suppression chamber cylinder: from 1-5/16 in. to 1.5 in.,
c. The drywell conical section: from 0.75 in. to 1.5 in., and
d. The removable top ellipsoidal head: 15/16 in.

Material thicknesses meet requirements of the ASME Code Section III, Paragraphs NE-3133 and NE-3324.

The primary containment vessel is reinforced with internal vertical and horizontal stiffeners to satisfy design requirements of the various loading combinations and conditions. Fully circumferential rings, attached to the inside face of the primary containment vessel are furnished at el. 516 ft 6 in. and 542 ft 7.25 in. The basic function of these rings is to support pipe whip protection framework and to adequately distribute pipe whip loading into the vessel.

The method used to ensure that there is an adequate clearance between the steel primary containment vessel and the concrete biological shield wall and which will account for differential thermal expansion is illustrated in Figure 3.8-2 and described as follows:

a. A system consisting of approximately 2-in.-thick polyurethane flexible foam sheets, butted at their joints and cemented directly to the containment shell, is

used. The exterior surface sealed with laminated fiberglass reinforced polyester, epoxy jointed, panels which are bonded to the polyurethane sheets;

b. Steel anchor fasteners are attached to the fiberglass reinforced polyester panels, and used for anchoring the inner end of the form ties which extend to the forms on the outside face of the concrete biological shield wall. These fasteners are mounted on the fiberglass reinforced plastic prior to bonding of the flexible foam;

c. The fiberglass panel joints are taped and filled with epoxy so that the entire assembly forms a shell around the containment vessel with the polyurethane material set against and bonded panels thereby are permanent inner forms for the pouring of the concrete structure;

d. Drywell penetrations which extend from the containment vessel shell through the concrete biological wall, are surrounded with concentric sleeves. These pipe sleeves are joined to the fiberglass shell using fiberglass tape and epoxy resins. This technique similarly provides a form for the concrete and maintains adequate clearance between the penetrations and the sleeves to accommodate thermal expansion;

e. The polyurethane foam material is chosen for its resistance to the environmental conditions likely to exist during its service life. Although normal inservice temperature ranges from 95°F to 135°F (average) and 150°F (local), the polyurethane which is used is capable of withstanding temperatures in excess of the LOCA temperature of 340°F. Furthermore, this material is self extinguishing in accordance with ASTM D-1692;

f. The sizing of the expansion gap in which the foam sheet is placed is based on an ultimate steel shell temperature of 340°F and an internal pressure of 45 psig following a postulated reactor LOCA. The external compressive stress applied to the containment vessel by the polyurethane foam, due to vessel thermal expansion from ambient conditions, ranges from 1.2 to 1.5 psi at normal operating and LOCA temperatures. At these temperatures the stress-strain curve for the polyurethane foam is nearly linear between 5% and 60% compression, ranging from approximately 1.2 psi at 5% compression to 1.8 psi at 60% compression. These properties are not significantly affected by the level of radiation exposure received over the plant life; and

g. The above design, materials, and construction of the containment vessel expansion gap provides sufficient space for thermal expansion of the steel containment vessel shell. Moreover, this method of construction prevents either concrete or other foreign material from entering and/or reducing the gap. Local

stress areas are thereby prevented, and the primary containment system is capable of accommodating both normal operating as well as postulate accident conditions.

The steel primary containment vessel, including all penetrations and welded attachments, is designed to act as a structural component within the reactor building as described in Section 3.8.2.4. The general configuration, and elevations are shown in Figures 3.8-1 and 3.8-2. The primary containment vessel is provided with two concentric circular skirts on the bottom ellipsoidal head integral with the vessel. The skirts are anchor bolted to the concrete foundation mat. The bottom ellipsoidal head and the upper portion of the skirts connected to the head are considered part of containment pressure boundary in accordance with the ASME Code Section III. The lower portion of the skirts follow the requirements of the American Institute of Steel Construction (AISC) Code. The skirts are backed up by concrete fill. The concrete fill and the concrete foundation mat discussed in Section 3.8.5 are not part of the containment vessel.

3.8.2.1.1 Description of Penetrations

Penetrations through the primary containment vessel are as follows.

3.8.2.1.1.1 Pipe Penetrations. Two general types of pipe penetrations are provided. The two types differ depending on whether the penetration is subject to a hot or cold operational environment. The cold penetrations pass through the steel primary containment vessel and are welded directly to it. The piping is normally welded directly to the penetration nozzles. The piping design includes the effects of thermal motion of the containment shell at the penetration connections.

The hot penetrations and multiple piping penetrations do not come in direct contact with the steel shell of the primary containment vessel. These penetrations pass through vessel shell nozzles which are welded to the steel shell of the primary containment vessel and function as thermal sleeves. Containment closure is accomplished by means of closure plates or flued head fittings, welded to the penetration nozzle and the piping at a suitable distance outside the containment shell. Detailed descriptions of pipe penetrations are given in Section 3.8.6.

3.8.2.1.1.2 Electrical Penetrations. Containment electrical penetrations are designed to safely accommodate all of the electrical requirements within the containment boundary. These are functionally grouped into low voltage power and control cable penetrations assemblies, medium voltage power cable penetration assemblies, signal cable penetration assemblies and thermocouple cable penetration assemblies. The medium voltage power cable electrical penetrations are canister type assemblies sized to be inserted into the containment vessel penetration nozzles. All other electrical penetrations are a unitized header plate assembly attached to the outboard end of the containment vessel penetration nozzles. Detailed descriptions of electrical penetrations are given in Section 3.8.6.

3.8.2.1.1.3 Traversing In-Core Probe Penetrations. Five traversing in-core probe (TIP) guide tubes pass from the reactor building to the drywell through the primary containment vessel. The penetrations are a Type 2 (see Section 3.8.6.1.2) piping penetration modified with a welding neck flange attached outside the containment. This flange is itself modified with dual concentric O-ring grooves machined into the face, which retain elastomeric O-rings. To this is bolted a blank flange which has been drilled for both a between-O-ring test port and a central hole in which an instrument tubing "bulkhead union" fitting is retained. This single penetration point is sealed by seal welding between the bulkhead union and the blank flange. The TIP guide tubes are attached to both sides of their respective bulkhead unions by flare fittings. These penetrations are also discussed in Section 3.8.6.1.2.

3.8.2.1.1.4 Personnel Access Lock and the (Combined) Equipment Hatch and Control Rod Drive Removal Hatch. The drywell has one manually operated personnel air lock. This air lock consists of a cylindrical shell with two doors, one at each end of the shell. The cylindrical shell is approximately 8 ft 10.5 in. in diameter which is sufficient to provide 6 ft 8 in. high by 3 ft 4 in. wide door openings above the floor. The minimum clear horizontal distance not impaired by the door swing is 5 ft. Each door has double compressible seals with an air space between them so that each door may be individually tested. Each door is hinged and swings toward the drywell.

The air lock doors are designed so as to permit either door to be operated from inside the drywell, inside the air lock, or outside the drywell. In addition, the air lock doors are interlocked to ensure that at least one door is locked when primary containment integrity is required. Signals and controls indicating the status of the doors are provided locally. The locking mechanisms are designed so that tight seals are maintained when the doors are subject to either the design internal or external pressure. A mechanical override is provided to permit temporary bypassing of the door interlock system to permit opening both doors under proper authorization. Quick acting equalizer valves are provided to equalize the pressure in the air lock when personnel enter or leave the primary containment vessel.

The drywell has one equipment removal hatch. The equipment hatch cover is dished and has steel stiffeners. The hatch cover is bolted to a flanged steel sleeve welded to the primary containment vessel shell such that the hatch cover can be removed and reinstalled from outside the drywell. The equipment hatch and cover is entirely supported by the steel containment vessel. Double compressible seals with an air space between them are used to permit leak testing at any time. The inside diameter of the equipment hatch is approximately 12 ft 6 in. which provides a minimum clearance above the floor at the hatch of 10 ft 1.5 in. high by 7 ft 0 in. wide.

Included within the equipment hatch cover is a control rod drive (CRD) removal hatch with its hinged cover. This hatch is provided with leak-testable, double-gasketed seals. The inside

diameter of this hatch is approximately 1 ft 11 in. in diameter which provides a minimum clearance of 11 in. high by 1 ft 4 in. wide at the hatch.

The personnel access lock and the equipment hatch extend radially outward across the annular gap of compressible isolation material and through the biological shield wall and are supported by the primary containment vessel only.

Both the personnel air lock and the equipment removal hatch are designed to withstand the normal environmental conditions which may prevail during normal plant operation and to maintain their functional integrity during a postulated LOCA. The design meets the requirements of the ASME Code Section III, Subsection NE, Class MC Components.

3.8.2.1.1.5 Pressure Suppression Chamber Access Hatch. Access to the pressure suppression chamber is provided at one location in the cylindrical well of the chamber approximately 7 ft 6 in. above the suppression pool operating water level. This access hatch is approximately 3 ft 5 in. in diameter, extends radially outward, is supported by the vessel and has a leak-testable, double-gasketed, bolted cover which is normally closed and is opened only when primary containment is not required. The minimum clearance at the hatch is 2 ft 2.75 in. wide by 2 ft 5.5 in. high. The design meets the requirements of the ASME Code Section III, Subsection NE, Class MC Components.

3.8.2.1.1.6 Access for Refueling Operations. The drywell containment head is removed during refueling operations. This head is held in place by bolts and is sealed with a double seal. It is bolted closed when primary containment is required and is opened only when primary containment is not required. The gasket seal is capable of limiting the leakage to below the design rate and is capable of being independently tested.

3.8.2.1.2 Description of Crane Girder (Not Applicable to CGS)

CGS does not have a crane girder inside containment.

3.8.2.1.3 Description of Vacuum Relief System

See Figure 9.4-8 for an illustration of the vacuum relief system described below.

Three 24-in. reactor building-to-wetwell vacuum relief lines, each containing a 24-in. vacuum breaker valve and an automatic air-operated butterfly valve, are provided between the reactor building and the suppression chamber. These valves prevent excessive vacuum from developing in the primary containment vessel from such causes as inadvertent containment spray actuation.

Each butterfly valve is equipped with a spring-to-open, air-to-close operator which, during normal plant operation is maintained in a closed position by means of a control air supply

through a three-way solenoid pilot valve. The plant control air supply to the valve is backed up by a Quality Class I air supply system, consisting of an accumulator pressurized by the plant control air system and an independent 10 nitrogen bottle manifold located in the vehicle air lock (railroad bay) which will automatically maintain accumulator pressure on loss of air supply from the control air system (see Figure 3.8-7). On venting of air from the air-operators, the spring- actuated butterfly valves open. Venting is accomplished through remote manual deenergization of the solenoid pilot valve or by a signal from the differential pressure switch which deenergizes the solenoid pilot valve when the secondary containment atmospheric pressure is more than 0.5 psi higher (analytical limit) than the suppression chamber atmospheric pressure.

Two limit switches, wired to indicator lights in the control room, are provided with each butterfly valve for position indication. One switch actuates when the valve is fully open and provides an alarm and "open" visual indication in the control room. The other switch actuates when the valve is fully closed and provides a "closed" visual indication in the control room (see Figure 3.8-8).

In series with each butterfly valve is a single disk check valve. The disk is maintained in the closed position during normal operation by means of a spring-actuated lever arm and magnets embedded in the periphery of the disk. The magnetic and spring forces are overcome, and the disk opens when the pressure differential across the valve is within the range of 0.10 to 0.35 psi. The disk is fully open when the pressure difference is 0.5 psi. In addition, pneumatic actuators are provided for remote operation of the disk. Compressed air is supplied by the plant control air system through the pneumatic operator Quality Class I accumulator and backup nitrogen supply as shown in Figure 3.8-7. Each disk pneumatic operator consists of two air cylinders, one to open and one to close the disk. Each air cylinder is actuated through energization of a three-way solenoid pilot valve. The two solenoid pilot valves associated with each disk are operated by a remote manual switch in the control room. During normal operation the remote manual switches are in the neutral position and the solenoids are deenergized. Each valve disk is provided with contact probe sensors for position indication. These sensors are wired to indicator lights in the control room to provide open and closed position indication. An additional sensor is also wired to a light in the control room that indicates when the disk is fully open.

Each reactor building to wetwell vacuum breaker is visually inspected at least once every 30 months.

Nine 24-in. wetwell-to-drywell vacuum relief valves attached to the downcomers in the suppression chamber are provided to return noncondensables from the wetwell to the drywell to prevent too large an upward pressure differential across the diaphragm floor after a LOCA.

Each wetwell-to-drywell vacuum relief valve assembly consists of two discs and seats which operate independently. The operation, controls, and position indication for each disc is as

described above for the single disc check valves. During normal plant operation the control air supply line to these valve assemblies is isolated. Also, residual pressure is vented from the line following vacuum relief valve testing to prevent inadvertent valve opening.

The vacuum breaker valves are sized to ensure that following design conditions are not exceeded.

a. The drywell internal design pressure of 2.0 psi below reactor building pressure,

b. The suppression chamber internal design pressure of 2.0 psi below reactor building pressure, and

c. The upward design pressure difference across the diaphragm floor of 6.4 psi.

The design evaluation for the vacuum relief is discussed in Section 6.2.1.1.4.

The vacuum relief valves are constructed to ASME Section III, Subsection NC for Class 2 components, 1974 Edition through the Summer 1975 Addenda.

Electrical systems associated with the control and position indication for the reactor building to wetwell vacuum breaker valves and the drywell-to-wetwell vacuum breaker valves are not Class 1E since electrical failure or malfunction will not prevent operation or cause inadvertent actuation under postulated accident conditions.

3.8.2.1.4 Containment Pressure Boundaries

The primary containment pressure boundaries for the steel primary containment vessel consist of those defined in Subarticle NE-1130 of the ASME Code Section III and the additional boundaries listed in the following:

a. The steel primary containment vessel shell including the top and bottom heads, and, as defined in the ASME Code Section III, Paragraphs NE-3364 and NE-4431, an upper portion of the skirts supporting the vessel, and

b. The attachment welds fastening pipe whip protection support rings, beam supports, and pads to the vessel for purposes of supporting piping support members, walkways, platforms, monorails, brackets, or other members to the containment vessel.

3.8.2.1.5 Primary Containment Environmental Conditions

The primary containment is designed to operate during all environmental conditions found in Section 3.11. See Table 3.8-2 for specific design conditions.

3.8.2.2 Applicable Codes, Standards, Specifications, and Regulatory Guides

3.8.2.2.1 Codes, Standards, and Specifications

The following describe the applicable codes, standards, specifications, code classification, and code compliance for the steel primary containment vessel.

a. The following sections of the ASME B&PV Code, 1971 Edition, including all addenda through Summer 1972 apply for the steel primary containment vessel.

   Section II, Material Specifications
   Part A - Ferrous
   Part B - Welding Filler Metals

   Section III, Nuclear Power Plant Components
   Subsection NE, Class MC Components
   Section V, Nondestructive Examination
   Section IX, Welding Qualifications;

b. The AISC Specification for the Design, Fabrication, and Erection of Structural Steel for Buildings, February 12, 1969, applies for the steel construction beyond the boundaries established for the steel containment vessel;

c. Steel Structures Painting Manual, Volume 2, Systems and Specifications, 1964 Edition with the 1968 Supplement and the January 1971 Editorial changes.

   Specification SSPC-SP-6, SP-8 and SP-10;

d. Applicable ASTM and AWS Material Standard Specifications permitted by Article NE-2000 of III;

e. Applicable ASTM Standard Specifications for nondestructive methods of examination referenced in Article X-3000 of Section III of the ASME Code;

f. Plant Design Specification 2808-213; and

g. National Electrical Code.

3.8.2.2.2 Code Classification

The steel primary containment vessel is classified Class MC in accordance with Subarticle NA-2130, Section III of the ASME Code, 1971 Edition through the Summer 1972 Addenda.

3.8.2.2.3 Code Compliance

3.8.2.2.3.1 Containment Vessel. The steel shell and the top and bottom heads of the steel primary containment vessel, including all penetrations and attachments within the boundaries defined in Section 3.8.2.1.4, are designed and constructed in accordance with Subsection NE, Class MC Components, including the requirements for quality assurance of the Article NA-4000, and inspection requirements of Article NA-5000 of Section III of the ASME Code.

3.8.2.2.3.2 Code Stamp. The steel primary containment vessel is ASME Code stamped in accordance with requirements of the Code applicable to Class MC containment vessels.

3.8.2.2.3.3 Exceptions. No exceptions are taken to the requirements of Section III of the ASME Code for Class MC containment vessels.

3.8.2.2.3.4 Attachments. Structural steel attachments beyond the boundaries established for the steel primary containment vessel are designed and constructed according to the AISC Specification for the Design, Fabrication, and Erection of Structural Steel for Building, February 12, 1969, where applicable. Nonpressure vessel elements such as catwalks and interior beam connections with hatch floors are designed in accordance with the AISC Code. Stress intensity limits are in accordance with the allowable permitted by the AISC Code with the exception that, for loading combinations including OBE, no increase in allowable stress will be permitted.

The inner and outer skirts for the support of the primary containment vessel are designed in accordance with Subarticle NE-3100 of Section III of the ASME Code.

Supports for pipe whip guide rings are designed as described in Section 3.6.

3.8.2.2.4 Regulatory Guides

The following regulatory guides related to the primary containment vessel are applicable to CGS. Their implementation is discussed in Section 1.8.

a. Regulatory Guide 1.7, Rev. 1 - Control of Combustible Gas Concentrations in Containment Following a LOCA,

b. Regulatory Guide 1.11, Rev. 0 - Instrument Lines Penetrating Primary Reactor Containment,

c. Regulatory Guide 1.28, Rev. 0 - Quality Assurance Requirements (Design and Construction),

d. Regulatory Guide 1.29, Rev. 3 - Seismic Design Classification,

e. Regulatory Guide 1.46, Rev. 0 - Protection Against Pipe Whip Inside Containment,

f. Regulatory Guide 1.57, Rev. 0 - Design Limits and Loading Combinations for Metal Primary Containment System Components,

g. Regulatory Guide 1.63, Rev. 0 - Electric Penetration Assemblies in Containment Structures for Water-Cooled Nuclear Power Plants,

h. Regulatory Guide 1.84 - Code Case Acceptability - ASME Section III Design and Fabrication, and

i. Regulatory Guide 1.85 - Code Case Acceptability - ASME Section III Materials.

3.8.2.3 Loads and Loading Combinations

The primary containment vessel is designed to withstand forces due to

a. Dead load, including permanent equipment loads and hydrostatic loads,

b. Live loads, including movable equipment loads and other loads varying in intensity and occurrence,

c. Thermal effects and loads during startup, normal operating, and shutdown conditions, based on the most critical transient or steady-state conditions,

d. Earthquakes,

e. Wind during construction, and

f. Pressure and temperature effects, jet impingement, and missile impact all due to pipe break accident.

The vessel design includes analyses in the vicinity of the primary containment vessel penetrations for the penetration load combinations given in Section 3.8.6.3.

3.8.2.3.1 Design Pressures and Temperatures

a. Pressure suppression chamber

1.	Internal design pressure (LOCA pressure)	45 psig

	2.	External design pressure (due to negative internal pressure)	2.0 psig
	3.	Design temperature	275°F
b.	Drywell		
	1.	Internal design pressure (LOCA pressure)	45 psig
	2.	External design pressure (due to negative internal pressure)	2.0 psig
	3.	Design temperature	340°F

c.	Pressure suppression chamber and drywell		
	1.	Pneumatic over pressure test (115% of 45 psig)	51.8 psig at ambient temperature
	2.	Initial leak rate test leakage rate of 0.5% of air per any 24 hour period	Maximum permitted total weight of contained at 38 psig test pressure.
d.	Differential design pressure (downward on drywell floor following a LOCA)		25 psid
e.	Differential design pressure (upward on drywell floor following a LOCA)		6.4 psid
f.	Lowest service metal temperature		30°F

3.8.2.3.2 Operating Pressure and Temperature

See Table 3.8-1 for normal operating pressures and temperatures.

3.8.2.3.3 Dead Loads

The following dead loads are transmitted directly through the concrete fill inside the bottom head of the primary containment vessel, through the continuous concrete fill directly under the bottom head and then into the reactor building foundation mat:

a. Concrete fill inside the bottom head of the primary containment vessel,

b. Concrete columns in the suppression chamber and contributory portion of the drywell floor supported by the columns,

c. Contained air in the suppression chamber,

d. Water in the suppression chamber, and

e. Reactor vessel pedestal, reactor pressure vessel (RPV), SSW, and contributory portion of the concrete drywell floor supported by the pedestal.

The following are typical dead loads used in the design of the primary containment vessel:

a. Vessel and appurtenances,

b. Water in the suppression chamber with coincident hydrostatic pressure,

c. Attached equipment and supports, catwalks, platforms and attached piping, air ducts, electrical ducts, conduit and trays,

d. Header loads,

e. Contained air, under test conditions,

f. Weight of the gap filler material applied to the outside face of the shell (used 5 psf.),

g. Design load on welding ring pads of 1500 lb per lineal foot acting in any direction. Welding ring pads are in the drywell and are used for attaching pipe and duct hangers, hoist supports, etc. These pads are welded parallel to the containment vessel surface,

h. Stabilizer truss,

i. Construction dead loads, e.g., scaffolds, and

j. Water in the drywell with coincident hydrostatic pressure, under the flooded condition.

3.8.2.3.4 Live Loads

The following are typical live loads used in the design of the primary containment vessel:

a. Live loads on the drywell floor, platforms and catwalks discussed in Sections 3.8.3.1.3 and 3.8.3.1.4,

b. Monorail live and impact loads,

c. Live loads on floor section of personnel air lock (300 psf), equipment access hatch (1000 psf), and suppression chamber access (150 psf),

d. Live load on temporary construction scaffolds,

e. Operating weight of fluid in attached normally empty piping, headers and penetrations,

f. Head of water, 23 ft 6 in. high, on the refueling bellows seal with the containment vessel head removed and coincident hydrostatic pressure (under the refueling condition), and

g. Same as Section 3.8.2.3.4(f) above except without the containment vessel head removed (under the flooded condition).

3.8.2.3.5 Mechanical Piping Loads

Mechanical piping loads consist of

a. Piping reactions during normal operating or shutdown conditions, based on the most critical transient or steady-state condition,

b. Pipe reactions under thermal conditions generated by a postulated break and including (a) above,

c. Equivalent static load generated by the reaction of a broken high-energy pipe during a postulated break (and including an appropriate dynamic load factor to account for the dynamic nature of the load),

d. Jet impingement equivalent static load generated by the design-basis accident (DBA) postulated break (and including an appropriate dynamic load factor to account for the dynamic nature of the load), and

e. Pipe reactions and thermal conditions during an event causing external pressure.

A description of certain loads included among those listed above follows:

3.8.2.3.5.1 Jet Forces in Drywell. The drywell shell, personnel air lock, equipment hatch, jet deflectors, and the removable top closure head are designed and constructed to withstand, in combination with other loads, jet forces consisting of either steam and/or water at 340°F and applied as follows:

	Jet Force (kips)	Area Subjected (in^2)
From the closure head flange to the top of the head	33	26
From the closure head flange down to the drywell floor	534	429

A jet force is considered to occur in any direction but is not considered to occur simultaneously with another jet force; however, a jet force is considered to occur coincident with the drywell internal design pressure of 45 psig and design temperature of 340°F. Local yielding may take place on the drywell shell from the jet force, but the shell will not rupture. On the top closure head and other areas, where the shell is not backed up by concrete, the primary stresses resulting from this combination of loads do not exceed the values specified in the ASME Code Section III, Paragraph NE-3131(c) at a temperature of 340°F.

3.8.2.3.5.2 Vent Pipe (Downcomer) Thrusts. The vent pipes (downcomers) and their connections to the drywell floor are designed for the following loads:

a. Jet blowdown thrust

A jet force of 20,000 lb acting upward on each of the downcomers is considered to occur simultaneously with an internal design pressure of 20 psig and a design temperature of 275°F;

b. Initial and final test conditions

A force equal to 1.25 times the design pressure multiplied by the flow area of the vent pipe; and

c. Accident conditions

Forces obtained from Section 3.8.2.3.5.2 (a) except that the temperature in the drywell is taken as 340°F and the temperature in the suppression chamber is taken as 275°F. The drywell floor concrete temperature is taken as 95°F.

3.8.2.3.5.3 Pipe Whip. Pipe whip protection support rings, which are fully circumferential rings, are attached to the primary containment vessel at el. 516 ft 6 in. and 542 ft 7.25 in. The basic function of these rings is to support pipe whip protection framework and to adequately distribute pipe whip loading into the vessel.

The pipe rupture loading is applied to the vessel through the support rings during normal operating conditions at normal operating temperature and at atmospheric pressure, as well as during an incident condition at maximum temperature of 340°F and at design pressure. The primary containment vessel analysis include the effects of a pipe rupture at any single location. For further discussion on function and design of load transmitting members see Section 3.6.

3.8.2.3.6 Thermal Loads

The thermal loads in the primary containment vessel steel are produced by the presence of temperature gradients within the containment and its appurtenances. Thermal effects and loads during normal operating conditions are based on the most critical transient or steady-state condition. Thermal loads are also considered under thermal conditions generated by a postulated pipe break.

3.8.2.3.7 Construction Loads

a. Wind load in the projected area of the steel primary containment vessel before the completion of the reactor building in accordance with Reference 3.8-1, with a basic wind of 100 mph as discussed in Section 3.3, and

b. Snow loads before the completion of the reactor building.

3.8.2.3.8 Missile Loads

There are no external missile loads considered since the primary containment vessel is protected by the biological shield wall. Potential internal missiles and protection provisions are discussed in Section 3.5.

3.8.2.3.9 Loss-of-Coolant Accident Loads

The LOCA imposes pressure and thermal loads plus jet forces associated with coolant flow from any ruptured pipe within the containment. This LOCA loading condition is determined

by analysis of the transient pressure and temperature effects which occur during a LOCA. The governing design condition for the LOCA is discussed in Section 6.2.

3.8.2.3.10 Accident Recovery Loads

Among the postulated LOCAs there may be an accident within the drywell that requires a contingency flooding of the pressure suppression chamber and the drywell to an elevation above the top of the active fuel zone in the reactor vessel as indicated in Section 3.8.2.3.12h; and, with the primary containment vessel head not removed, the reactor vessel cavity outside the primary containment vessel and above the refueling bellows seal flooded to a level above the refueling bellows seal noted in Section 3.8.2.3.12.

The structural design criteria for the primary containment vessel are consistent with the provisions of Regulatory Guide 1.57, Revision 0 (issued June 1973) except with respect to the stress limits specified in Section C-1-b (2) of the guide for the load combinations of accident recovery flooding plus OBE.

For the flooded condition loading combination described in Section 3.8.2.3.12h, the various stress categories shown in ASME Code Section III, Figure NB 3222-1 are satisfied, using allowable primary general membrane stress intensities specified in the ASME Code Section III paragraph NE 3131(c)(1) and NE 3131(c)(2).

The stress limits for the primary containment vessel for the accident recovery flooding plus OBE load condition are shown in Section 3.8.2.5.3. Justification for these stress limits, which are higher than those outlined in Regulatory Guide 1.57 is based on the extremely low probability that flooding would ever be required.

3.8.2.3.11 Seismic Loads

Equivalent static loads are developed through a dynamic analysis of Seismic Category I structures subjected to the OBE and the SSE.

3.8.2.3.12 Loading Combinations

The loading combinations considered in the design of the steel primary containment vessel apply to both the drywell and suppression chamber, unless otherwise noted, and include the following typical loads:

a. Initial proof load test condition (at ambient temperature)

This is a normal condition.

1. Dead load

(a) Vessel and appurtenances,

(b) Water in suppression chamber with coincident hydrostatic pressure,

(c) Concrete drywell floor,

(d) Catwalks and platforms,

(e) Contained air, and

(f) Header loads, empty;

2. Live Loads

(a) On drywell floor, and
(b) On catwalks and platforms;

3. Design pressure, internal, in suppression chamber;

4. Test pressure, internal in the drywell;

5. Lateral wind or OBE, horizontal and vertical, whichever is more severe; and

6. Jet blowdown thrusts in the suppression chamber taken at columns, reactor pedestal and penetrations;

b. Final proof load test condition (at ambient temperature)

This is a normal condition.

1. Dead load

Same items as in item a.1, plus:

(a) Drywell equipment, supports, platforms, and attached empty pipe and headers,

(b) Gap fill material, and

(c) Piping, ducts, hoist support loads, etc., on welding ring pads in drywell described in Section 3.8.2.3.3.h.

2. Live load

Same items as in item a.2;

3. Design pressure, internal (drywell and suppression chamber);

4. External pressure of 2 psi (consists of 2 psig restraint due to filler material);

5. Seismic OBE, horizontal, and vertical;

6. Jet blowdown thrusts in suppression chamber (same as item a.6); and

7. Drywell refueling bellows seal loads, namely, the effects of the spring action of refueling bellows seal onto the containment vessel;

c. Normal operating condition (at atmospheric pressure and at operating temperature ranging from 50°F to values specified in Table 3.8-1).

This is a normal condition with OBE and is in conformity with ASME Code, Section III, Paragraph NE-3131(c)(1) or (c)(2) with SSE.

1. Dead load

(a) Vessel and appurtenances,

(b) Water in suppression chamber and coincident hydrostatic pressure,

(c) Concrete drywell floor,

(d) Catwalks in suppression chamber,

(e) Drywell equipment, supports, platforms and attached pipes, headers, air ducts, electrical ducts, conduits, and trays,

(f) Gap filler material, and

(g) Loads on welding ring pads (same as in item b.1);

2. Live load

   (a) On drywell floor,

   (b) On catwalks and platforms,

   (c) Personnel and equipment access openings in the drywell and on personnel access openings in suppression chamber, and

   (d) Operating weight of fluid in normally empty piping and penetrations;

3. External pressure of 2 psi (same as in item b.4);

4. Seismic OBE or SSE, horizontal and vertical, including seismic loads from shear lugs between the drywell floor and the containment vessel and seismic loads from the reactor vessel stabilizers;

5. Jet blowdown thrusts in suppression chamber (same as in item a.6);

6. Drywell refueling bellows seal loads;

7. Drywell floor seal loads; and

8. Thermal loads described in Section 3.8.2.3.6

d. Refueling condition (with containment vessel head removed, at atmospheric pressure and at operating temperature ranging from 50°F to values specified in Table 3.8-1).

This is a normal condition.

1. Dead load

   Same as in item c.1;

2. Live load

   Same items as in item c.2 plus water load due to 23 ft 6 in. head of water on the refueling bellows seal, at the top flange of the drywell, with coincident hydrostatic pressure;

3. External pressure of 2 psi (same as in item b.4);

4. Seismic OBE, horizontal and vertical;

5. Drywell refueling bellows seal loads;

6. Drywell floor seal loads, namely, the effects of spring action on floor seal on to the containment vessel; and

7. Thermal loads described in Section 3.8.2.3.6;

e. Accident condition (at drywell maximum temperature of 340°F and suppression chamber maximum temperature of 275°F). This is a normal condition with SSE in conformance with ASME Code Section III, Paragraph NE 3131(c), or with OBE.

1. Dead load

Same items as in item c.1;

2. Live load

(a) On drywell floor,

(b) On catwalks and platforms, and

(c) Operating fluid weight in normally empty piping and penetrations;

3. Internal design pressure in drywell of 45 psig decaying to a negative pressure of 2 psig at 135°F;

4. Internal design pressure in suppression chamber of 45 psig decaying to a negative pressure of 2 psig at 275°F;

5. External pressure of 2 psi (same as in item b.4);

6. Seismic OBE or SSE, horizontal and vertical, including seismic loads from shear lugs between the drywell floor and the containment vessel, and seismic loads from the reactor vessel stabilizer;

7. Jet blowdown thrusts in suppression chamber (same as in item a.6);

8. Jet forces on drywell shell, personnel air lock, equipment hatch, drywell floor, jet deflectors on the drywell floor over the downcomers and at the floor periphery, and the head of the containment vessel. See Section 3.8.2.3.5.1;

9. Drywell refueling bellows seal loads;

10. Drywell floor seal loads;

11. Effects of header jet nozzle loads; and

12. Thermal loads described in Section 3.8.2.3.6;

f. Accident condition with pipe whip (at drywell maximum temperature of 340°F and suppression chamber temperature of 275°F).

This condition includes pipe whip support load effects onto the containment vessel shell.

Loads are the same as those in item e, with the addition of loads on pipe whip support rings due to main steam or reactor feedwater pipe ruptures;

g. Normal condition with pipe whip (at atmospheric pressure and at operating temperature ranging from 50°F to values specified in Table 3.8-1).

Earthquakes used are OBE or SSE. Stresses are in conformance with ASME Code, Section III, Paragraph NE-3131(c)(1) or (c)(2).

Loads are the same as those in item c, with the addition of loads on pipe whip support rings due to main steam or reactor feedwater pipe ruptures;

h. Flooded Condition (with drywell flooded to el. 552 ft 0 in., which is approximately 1 ft above the top of the active fuel zone in the reactor vessel, suppression chamber and downcomer vent system flooded; and, with the containment vessel head not removed, reactor vessel cavity outside the containment vessel and above the refueling bellows seal flooded to a level 23 ft 6 in. above the refueling bellows seal).

1. Dead load

(a) Vessel and appurtenances,

(b) Concrete drywell floor,

(c) Catwalks in suppression chamber,

(d) Drywell equipment, supports, platforms and attached piping, headers, air ducts, electrical ducts, conduits, and trays,

(e) Gap filler material,

(f) Loads on welding ring pads same as in item b.1,

(g) Suppression chamber filled with water at a maximum temperature of 212°F and with coincident hydrostatic pressure, and

(h) Drywell filled with water to el. 552 ft 0 in. at a maximum temperature of 212°F and with coincident hydrostatic pressure;

2. Live load

(a) Operating weight of fluid in normally empty piping and penetrations, and

(b) Water load on the refueling bellows seal at the top flange of the containment vessel, and coincident hydrostatic pressure, due to the reactor vessel cavity outside the containment vessel above the refueling bellows seal flooded to a level 23 ft 6 in. above the seal, as described in item h;

3. External pressure of 2 psi (same as in item b.4);

4. Seismic OBE, horizontal and vertical, including loads from shear lugs between the drywell floor and the containment vessel, and loads from the reactor vessel stabilizer; and

5. Drywell floor seal loads.

3.8.2.4 Design and Analysis Procedure

The steel primary containment vessel, which consists of a vertical free-standing bell-jar shell, bottom and top ellipsoidal heads and numerous penetrations and attachments, is considered to act as an independent structural component within the reactor building. The bottom head, which is supported by the concrete mat foundation, is designed as a pressure tight and leaktight membrane.

The steel primary containment vessel is designed to the ASME Code Section III, Subsection NE for Class MC components. Those areas of the steel primary containment vessel that are free from structural discontinuities and experience no discontinuity stresses due to thermal and/or mechanical loads are designed in accordance with Subarticle NE-3300 of ASME Code Section III. For the configurations and loadings located throughout the steel primary containment vessel including anchorage, embedment, and all appurtenances which are not explicitly treated in Subarticle NE-3130, the design is in accordance with the applicable references designated in paragraphs (b) and (c) of Paragraph NE-3131 of ASME Code Section III.

The design of nonpressure resisting components within the steel containment vessel that are within the jurisdiction of ASME Code Section III, Subsection NE, is performed in accordance with ASME Code Section III, NE-3131 (e).

The design of nonpressure resisting components within the steel containment vessel which are outside the jurisdiction of ASME Code Section III, Subsection NE, is performed in accordance with the general practices of the AISC Specification for the Design Fabrication and Erection of Structural Steel for Buildings, February 12, 1969.

A comparison of the design pressures to the maximum calculated pressures is shown in Table 3.8-3.

3.8.2.4.1 Description

The following describes the design and analysis procedures required to verify the structural integrity of critical areas present within the steel primary containment vessel.

3.8.2.4.1.1 Bottom Ellipsoidal Head and Bell-Jar Shaped Shell. The 2:1 ellipsoidal head is designed in accordance with Subarticle NE-3300, Vessel Design, of ASME Code Section III.

The compressive stresses within the knuckle region caused by internal pressure are limited to the allowable buckling stress in accordance with Paragraph NE-3133 of ASME Code Section III.

The design of the top and bottom ellipsoidal heads for both external pressure and compressive loadings is in accordance with Paragraph NE-3133 of ASME Code Section III.

The bell-jar shaped shell of the steel primary containment vessel is designed in accordance with Subarticle NE-3300 for internal pressure. For external pressure and mechanical loads which include compressive stresses in the bell-jar shaped shell the design is in accordance with Paragraph NE-3133 of ASME Code Section III.

The bell-jar shaped shell contains the following major structural discontinuities:

a. Steel containment vessel embedment, discussed in Section 3.8.2.4.1.2,

b. Vertical stiffeners on the inside periphery of the suppression pool portion of the steel containment vessel, to increase the longitudinal compression strength of the vessel,

c. Horizontal stiffening rings on the inside periphery of the steel containment vessel to provide capability to resist external pressure,

d. Ring girders attached to the inside periphery of the steel containment vessel at el. 516 ft 6 in. and el. 542 ft 7.25 in., as discussed in Section 3.8.2.3.5.3, and

e. Steel containment vessel closure flange and refueling bellows attachment at el. 583 ft 1.25 in.

3.8.2.4.1.2 Steel Containment Vessel Embedment Region. The anchorage of the steel containment vessel to the concrete foundation mat is facilitated by means of an embedded lower skirt. Analysis for this portion utilizes the computer as described in Section 3.8.2.4.2.

The anchorage itself is accomplished by the use of anchor bolts and embedded plates located at the bottom outer steel skirt of the primary containment vessel. The anchor bolts extend into the concrete mat foundation a distance sufficient to develop the required embedment length. The anchor bolts and embedded plates are designed to resist the moments and vertical shears developed by the axial tensile forces of the steel primary containment vessel shell.

3.8.2.4.1.3 Penetrations. The containment penetrations are designed to withstand the normal environmental conditions which may prevail during plant operation and to retain their integrity during all postulated accidents. Containment penetrations are fully described in Section 3.8.6.

An equipment hatch in the drywell is fabricated from welded steel and furnished with double-gasketed flanged and bolted doors. Provision is made to test pressurize the space between the double gaskets of the door flanges.

The personnel access lock is provided for drywell access. The personnel lock is a double door, latched, welded steel assembly. Quick-acting equalizing valves connect the personnel lock with the interior of the containment vessel for the purpose of equalizing pressure in the two systems when entering or leaving the containment.

The two doors in the personnel access lock are interlocked to prevent both being opened simultaneously and to ensure that one door is completely closed before the opposite door can be opened. An emergency lighting and communication system operating from an emergency supply is provided in the lock interior.

The suppression chamber access hatch is fabricated from welded steel and furnished, on the reactor building side, with a double bolt, horizontal hinged, dished steel closure. The closure is flanged and double gasketed with provisions to test pressure between the double gaskets of the closure flange.

Electrical penetrations are provided with double seals and are separately testable at 45 psig. The test taps and seal are located so that tests of the electrical penetrations can be conducted without entering or pressurizing the drywell or suppression chamber. Gaskets are separately testable at the containment maximum internal pressure of 45 psig to verify leaktightness. The covers on flanged closures, such as the equipment hatch cover, the drywell head, suppression chamber access hatch, and personnel access lock doors are provided with double seals so that these can be tested for leaktightness without pressurizing the entire containment system.

3.8.2.4.1.4 Personnel Access Lock and the (Combined) Equipment Hatch and Control Rod Drive Removal Hatch. The personnel access air lock and the equipment hatch/CRD removal hatch, are supported entirely by the steel containment vessel shell. The lock barrel is welded directly to a thick insert plate which in turn is welded at its periphery to the shell of the steel containment vessel. The barrel in the vicinity of its attachment to the insert plate is also thickened as required. The additional thickness in both the barrel and insert plate is provided to satisfy the area reinforcement requirements as well as to resist the external moments and shears due to the cantilevered construction. The discontinuity stresses induced by the combination of external, dead, and live loads including the effects of earthquake loadings are evaluated. The required analyses and limits for the resulting stress intensities are in accordance with Subarticles NE-3100 and NE-3200 of ASME Code Section III.

The doors for the personnel access air lock are dished. The analyses are in accordance with Paragraphs NE-3325 and NE-3326 of ASME Code Section III.

Additional stiffeners are provided as required around the opening of the equipment hatch.

Analytical methods developed by P. P. Bijlaard for the Welding Research Council and the summarization presented in Reference 3.8-4 are utilized to determine the stresses in a cylindrical shell with openings. With a thick insert plate, a flanged neck around the periphery and gusset plates, the stresses are within the ASME Code allowables.

The required analysis and the stress intensity limits are in accordance with Subarticles NE-3100 and NE-3200 of ASME Code Section III. The hatch cover with the bolted flange is designed in accordance with Paragraph NE-3326 of ASME Code Section III.

The following explains the method of analysis and the strength criteria used for the seismic design of the connections between the personnel access lock and equipment removal hatch and

the drywall shell; the provisions made to take care of shell, and the influence of complete local encasement of the drywell in concrete on the seismic design:

a. The entire containment vessel shell, including the personnel air lock and the equipment hatch, is designed to withstand seismic loading derived by seismic analysis as described in Section 3.7. The method of shell analysis is in accordance with ASME Code Section III, Class MC, utilizing allowable stress intensities required by this code;

b. Further, the containment vessel design also includes the seismic affects due to the inertia of the mass of the personnel access lock and the equipment hatch vibrating as an independent system; and

c. Since the personnel access lock and the equipment hatch are completely separated from the surrounding concrete wall by means of a gap, there is no interaction between these appurtenances and the concrete wall. The gap provided is of sufficient dimension to accommodate all vessel movements.

3.8.2.4.2 Computer Programs Utilized in Design and Analysis

The design and analysis of the steel containment vessel utilized the following three proprietary computer programs of the Pittsburgh-Des Moines Steel Company, Pittsburgh, Pennsylvania:

a. AX1, Analysis of Axisymmetric Solids,
b. AX2, Axisymmetric Shell Program, and
c. AX3, Analysis of Thin-Shell Solids of Revolution.

The italicized information is historical and was provided to support the application for an operating license. The AX1 computer program is a special purpose finite element program for the analysis of axisymmetric solids. Meridional-stiffening cannot be modeled in this program. Circumferential stiffening can be modeled with the axisymmetric finite elements. This program was used exclusively to evaluate jet load effects on the CRD Removal Hatch. All the members analyzed are unstiffened axisymmetric solids. It is capable of determining deformations and stresses within axisymmetric structures of arbitrary shape.

The AX2 computer program is a general purpose program for the analysis of composite shells of revolution loaded axisymmetrically. The shell theory used is for thin, isotropic, elastic shells. Meridional stiffening cannot be modeled. Circumferential stiffening members can be modeled as shell elements or as concentrated stiffnesses at node points. This program was used extensively in the analysis of the primary containment vessel. Meridional stiffening members were neglected in these AX2 analyses. Circumferential stiffening members were modeled as shell elements. It is capable of determining stresses and displacements in shells of revolution that are loaded axisymmetrically.

The AX3 computer program is a general purpose program for the analysis of composite axisymmetric shells. Loads can be applied axisymmetrically or non-axisymmetrically using fourier series representations. Meridional stiffening can be modeled by adding shell layers with zero modulus of elasticity in the circumferential direction. By adding a layer or layers of appropriate thickness' the axial and bending stiffness of the stiffening can be represented. Circumferential stiffening members can be modeled using shell elements or by using the layer method described above. It is capable of determining reactions and deformations for thin shell solids of revolution, such as discs, for axisymmetric loads.

The AX3 program was used to analyze two areas:

1. *The containment shell in the vicinity of the seismic stabilizers (el. 567 ft 5.5 in.) under a non-axisymmetric displacement loading. No meridional or circumferential stiffening exists in the region modeled.*

2. *The Equipment Hatch head/flange intersection under Jet loading. Meridional stiffening on the Equipment Hatch head and barrel was modeled using additional shell layers with zero modulus in the circumferential direction. No circumferential stiffening members exist in the area modeled.*

Computer programs AX1, AX2, and AX3 are further discussed in Section 3.12.

3.8.2.4.3 Seismic Analysis

The evaluation of the structural integrity of the steel primary containment vessel, when excited by seismic motion, is based on a dynamic analysis.

The steel primary containment vessel is designed to interact as a structural component with the reactor building (secondary containment structure) to which it is attached. The primary containment vessel is attached to the reactor building at the stabilizer truss level through the primary containment vessel/biological shield wall shear lug interface, and at the reactor building foundation mat level.

The structural components within the steel primary containment vessel, such as the reactor pedestal, reactor vessel and SSW are designed to interact with the reactor building and the primary containment vessel because of their connections at the reactor building foundation mat level, drywell floor level, and the top of the SSW level, through the reactor vessel shear lug/shear lug stabilizer/SSW stabilizer truss interfaces.

With the formulation of an overall mathematical model which provides for the realistic response of the containment system, response spectra and/or time histories are generated at the component interfaces, and at other desired points. These component response spectra and/or

time histories are used to perform detailed dynamic analyses of the individual components as previously mentioned.

Effects due to the presence of water in the suppression pool under earthquake excitations are established following the procedures described in Reference 3.8-2. The additional loads due to sloshing effect are included as part of the design loads of the primary containment vessel. The analytical results and methods of analysis utilized to determine the seismic sloshing effects in the suppression chamber are discussed in Section 3.8.2.4.3.2.

The model used for the seismic analysis and the method of seismic analysis to obtain the seismic moments, shears, displacements, and floor response spectra are discussed in Section 3.7. To obtain a detailed stress/strain analysis in local areas, the following additional methods are used.

In the dynamic analysis of the steel primary containment vessel component, a dynamic mathematical model is formulated which incorporates the general structural geometry and all significant boundary conditions present. The design of the numerous penetrations is such that any restraining forces on the steel primary containment vessel which could be developed can be considered as negligible. The effects of rotational inertia and shear deformations are also considered as negligible in the response of the steel containment vessel. In the determination of the seismic response of the steel containment vessel, damping effects are considered. The incorporation of damping into the dynamic analysis is facilitated by the use of viscous (velocity proportional) damping. The various damping values for both the OBE and SSE excitations for the steel containment vessel are discussed in Section 3.7.

The resulting equations of motion for the steel containment vessel were solved by the use of a computer program called DACSR. The solution algorithm used depends on the analytical method incorporated to evaluate the equations of motion for the system. A discussion of the solution technique is provided in Section 3.7.

The results of the dynamic seismic analysis contain values for maximum translation and rotational displacements and accelerations, moments and shears, as well as response spectra and/or time histories at desired points throughout the steel containment vessel.

These resultant forces are then combined with the various loading conditions is described in Section 3.8.2.3.12 and in accordance with Paragraph NE-3131 of Section III of the ASME Code. These combined forces are used in the structural analysis of the various critical areas present within the steel primary containment vessel. By using a response spectra and/or time history the cantilevered personnel locks, as well as any other appurtenance, are dynamically analyzed as previously discussed.

The resulting stress intensities due to the addition of seismic loads to the various loading conditions for the steel primary containment vessel and its appurtenances are in accordance

with the stress intensity limits as specified in Paragraph NE-3131 of the ASME Code, Section III.

3.8.2.4.3.1 Computer Program Utilized in the Seismic Dynamic Analysis. The seismic dynamic analysis utilized DACSR, a large capacity computer program discussed in Section 3.12. The program was capable of generating the required mass and stiffness matrices which were required to represent the mass and stiffness of the actual structure.

3.8.2.4.3.2 Seismic Dynamic Analysis of Water in Suppression Chamber (Sloshing Effects). Tests were not performed to arrive at the seismically induced sloshing loads in the suppression chamber. All of the loads were derived by calculations. The calculations provide the basis for the acceptance of these loads.

The method of analysis utilized to determine the seismic sloshing loads in the suppression chamber is taken from Reference 3.8-2 (Chapter 6 and Appendix F).

Two separate analyses were performed, using the formulations given in Reference 3.8-2 as follows:

a. In the first analyses, the entire suppression chamber is taken as a cylindrical rigid tank in plan having a flat bottom as modeled in the above-referenced document, in lieu of the actual 2:1 bottom ellipsoidal head, and supported on the foundation mat. In this analysis the RPV pedestal is excluded from the model, and the tank is considered as containing only the water to the full depth shown in Figure 3.8-1; and

b. In the second analysis, the RPV pedestal is included in the model. To include the pedestal, the suppression chamber is modeled to consist of theoretical rectangular tanks in plan, of the minimum quantity and the maximum size that can be fitted or inscribed adjacent to each other within the annulus formed by the cylindrical wall of the suppression chamber and the concentric cylindrical RPV pedestal. The tanks are each assumed as independent rigid bodies supported on the foundation mat, flat-bottomed and containing water to the full depth shown in Figure 3.8-1.

In both analyses, the structures are subjected to the maximum floor accelerations due to the SSE. The acceleration values are obtained from the time-history analysis performed for the reactor building given in Section 3.7.

Both analyses yield water displacements, velocities, and impulsive and convective water pressures on the walls of the suppression chamber and the reactor building foundation mat.

The first analysis, which considers the RPV pedestal excluded from the suppression chamber, yields the maximum impulsive pressures. The second analysis, which considers the RPV included in the suppression chamber, yields the maximum convective pressures. To obtain conservative values for the forces, bending moments and overturning moments on the suppression chamber and foundation mat, the maximum impulsive forces from the first analysis and the maximum convective forces from the second analysis are assumed to occur together.

The following tabulation gives the analytical results obtained for the additional horizontal wall pressures due to SSE. The additional wall pressures are found to be negligible.

Distance below water surface el. 466 ft 4.75 in. (ft)	Horizontal wall pressure due to SSE induced water sloshing (psi)
0	0.30
5	1.56
10	2.57
15	3.30
20	3.74
Below 20	5.84

The maximum vertical displacement (slosh height) and velocity of the oscillating water surface above the undisturbed equilibrium water surface el. 466 ft 4.75 in. are 9.5 in., and 17.2 in./sec respectively, at the suppression chamber face. This occurs in the second analysis which considers rectangular tanks with the RPV pedestal included.

The period of water oscillation (time required for the water to oscillate one complete cycle) is 6 sec in the first analysis (circular tank) and 3.5 sec in the second analysis (rectangular tanks).

The analytical results used for horizontal pressures in the suppression chamber due to the OBE are one-half of the values obtained for SSE.

3.8.2.4.4 Protective Coatings

Protective coatings are described in Section 6.1.2.

3.8.2.5 Structural Acceptance Criteria

3.8.2.5.1 Primary Stresses

The structural acceptance criteria for the steel primary containment vessel, namely, the basis for establishing allowable stress values, the deformation limits, and the factors of safety, are established by and in accordance with ASME Code Section III.

In addition to the structural acceptance criteria, the steel primary containment vessel is designed to meet minimum leakage rate requirements. The leakage rate requirements are discussed in Section 6.2.

Loading combinations are discussed in Section 3.8.2.4 and buckling criteria is discussed in Section 3.8.2.5.4.

3.8.2.5.2 Primary and Secondary Stresses

For loading combinations described in Sections 3.8.2.3.12 (except for f and h), the stress limits specified in ASME Code Section III, NE-3131(c) are utilized.

3.8.2.5.3 Peak Stresses

For loading combinations described in Sections 3.8.2.3.12f and 3.8.2.3.12h, the stress limits specified in ASME Code Section III, NE-3131(c)(1) and NE-3131(c)(2) are utilized.

3.8.2.5.4 Buckling Criteria for the Primary Containment Vessel

To ensure safety against buckling, the rules set forth in ASME Code Section III, NE-3133, are utilized. The buckling analysis of the containment vessel was performed as follows:

External pressure: The allowable working pressure, P_a, calculated in NE-3133.3 was compared with the specified maximum external pressure, -4 psi. Conical shell elements were analyzed as equivalent cylinders in accordance with NE-3133.7.

Longitudinal compression on unstiffened shell: The maximum allowable compressive stress, B, determined in NE-3133.6, was compared to the maximum longitudinal compressive stress produced under all the loading conditions specified, including the compressive stress due to the SSE overturning moment.

Longitudinal compression meridionally stiffened shell: Two independent checks were made on buckling of stiffened shell lengths:

a. NE-3133.6 was applied as above using an equivalent thickness in bending, $t_e = (12 \times I_s/b)^{1/3}$

   b = meridional stiffener spacing

   I_s = moment of inertia of the composite section comprised of the stiffener and a width of shell, b.

b. Additionally, shell lengths were analyzed by treating the composite stiffener-shell described in item a as a column pinned at the shell ring stiffeners. These columns were evaluated for buckling using the AISC criteria.

3.8.2.6 Materials, Quality Control, and Special Construction Techniques

3.8.2.6.1 Materials

The materials essential to containment integrity (items a through f below) comply with the requirements of Article NE-2000 of the ASME Code Section III. Material for the containment vessel (Section 3.8.2) and vessel penetrations (Section 3.8.6) conforms to but is not limited to the following:

a. Plate

ASME SA-516, Grade 70 (drywell head, flanges, containment vessel, and electrical penetration weld ring collars)	Specification for carbon steel plates for pressure vessels for moderate and lower temperature service
ASME SA-537, Class 2 (containment vessel plates and penetration insert plates)	Specification for carbon-manganese silicon steel plates heat treated for pressure vessels
ASME SA-240 Type 304 (electrical penetration header plates for austenitic pipes or fittings)	Specification for chromium and chromium-nickel stainless steel plate, sheet, and strip for fusion-welded unfired pressure vessels
ASME SA-299 (jet deflectors)	Specification for carbon-manganese-silicon steel plates for pressure vessels;

b. Forgings

ASME SA-350 Grade LF1 or LF2 (flued head fittings or flanges)	Specification for forgings carbon and low alloy steel requiring notch toughness testing for piping components (for low temperature service)

ASME SA-182 F304 (flued head fittings for austenitic stainless steel process piping)	Specification for forged or rolled alloy-steel pipe flanges, forged fittings, and valves and parts for high-temperature service
ASME SA-105, Grade II, (flued heads)	Specification for forgings, carbon steel, for piping components (for ambient and high temperature service);

c. Pipe

ASME SA-333 Grade 1 or 6 (seamless)	Specification for seamless and welded steel pipe for low temperature service
ASME SA-312, Grade TP 304	Specification for seamless and welded austenitic stainless steel pipe
ASME SA-376, Grade TP 304	Specification for seamless austenitic steel pipe for high-temperature central-station service;

d. Bolting

ASME SA-320 Grade 17 (ferritic steels)	Specification for alloy steel bolting materials for low-temperature service
ASME SA-320 Grade B8 (austenitic steels)	Specification alloy steel bolting materials for low-temperature service
ASME SA-193 Grade B7 (ferritic steels)	Specification for alloy-steel and stainless steel bolting materials for high-temperature services
ASME SA-193 Grade B8 (austenitic steel)	Specification for alloy steel bolting materials for high-temperature service
ASME SA-194 Grade 7 (ferritic steels)	Specification for carbon and alloy steel nuts for bolts for high-pressure and high-temperature service
ASME SA-194 Grade 8 (austenitic steel)	Specification for carbon and alloy steel nuts for bolts for high-pressure and high-temperature;

e. Castings

ASME SA-216 Grade WCB	Specification for carbon-steel castings suitable for fusion welding for high-temperature service
ASME SA-352 Grade LCB	Specification for ferritic steel castings for pressure containing parts suitable for low-temperature service
ASME SA-351 Grade CF8	Specification for austenitic steel castings for high-temperature service;

f. Weld fittings, elbows, tees, and reducers

ASME SA-420 Grade WPL 6	Specification for piping fittings of wrought carbon and alloy steel for low-temperature service;

g. Gib material

ASTM A-514 (bearing plate under radial beam)	Standard specification for high-yield strength, quenched, and tempered alloy steel plate, suitable for welding
ASTM B-22, Copper Alloy No. 863 or Lubrite Alloy No. 424 (Material for bearing plates under radial beams, except in suppression pool. Material not required in suppression chamber.)	Standard specification for bronze castings for bridges and turntables

Self-lubricating bearing plates are Lubrite, a manganese bronze material, produced by an established manufacturer of such material. They are provided with trepanned recesses which are filled with a lubricating compound capable of withstanding the design temperature and load and consisting of graphite and metallic substances with a lubricating binder. The compound is pressed into the recesses by hydraulic presses so as to form dense, nonplastic inserts. The lubricating area comprises not less than 25% of the total area. The coefficient of friction does not exceed one-tenth.

This material is not used in the suppression pool where it is classified a detrimental material and therefore prohibited. Such a material, however, is not required in the suppression chamber.

h. Material that does not fall within the scope of the ASME Code conforms to the following ASTM Specification:

ASTM A-36	Standard specification for structural steel;

i. Material for anchor bolts of bottom support skirts and temporary hoist structures conforms to the following ASTM specification:

ASTM A-307	Standard specification for carbon steel externally and internally threaded standard fasteners;

j. Gasketing material - Gaskets are solid and are fabricated in continuous rings of silicone, neoprene, or natural rubber or other material suitable for its intended service. Gaskets have a guaranteed life of not less than 12 months. The sealing pressure on each gasket is constant for the life of the gasket. Results of tests performed by an approved testing laboratory demonstrate satisfactory performance of the gaskets. Gaskets are used at hatches and flanges. Typical applications are described in Section 3.8.2.4.1.3;

k. Concrete fill between the top of the foundation mat and the underside of the primary containment vessel, within the area bounded by the bottom support skirts, is an expansive cement concrete. The minimum compressive strength of the concrete fill is 4000 psi at 28 days; and

l. Grout under bottom support skirts is the non-shrink type. Preparation, mixing and placing of grout is in accordance with the manufacturer's instructions. The design strength of grout is 4000 psi at 28 days.

3.8.2.6.2 Quality Control

Quality control measures used during the construction and installation of the steel primary containment vessel and the penetration assemblies (discussed in Section 3.8.6.6) are

a. *The vessel vendor submitted shop and field quality compliance and quality assurance organization and procedures. These procedures include, as applicable, the methods of documentation of materials, material control, welder identification, and welding electrode handling and distribution; and the vendor's*

methods of qualification of nondestructive testing and welding personnel, procedures, and equipment.

b. The records pertaining to the steel primary containment vessel contain distinct categories; these are material certifications, welding data, test data, vendor drawings, and vendor-certified stress reports. All records are turned over to the Owner on completion of the work.

1. Material certification

(a) Mill Test Reports - mechanical and chemical properties of material used, as detailed within the project specifications.

(b) Nondestructive testing reports.

(c) Plate forming procedures.

2. Welding data

(a) Shop weld data - description of the procedures used, the welding process or processes, the welder or welders performing the welding operations, the type of weld, and the results of the following inspections: visual, radiography, ultrasonic magnetic particles or liquid penetrant, as well as the name of the inspector and date inspection was performed.

(b) Field weld data - the same type of information reported under Shop Weld Data.

(c) As-built drawings - drawings designating structural plate, member or part locations and field welds by number.

(d) Inspection and quality assurance reports.

3. Test data

(a) Cleaning records pertaining to cleanliness inspections.

(b) Pneumatic tests - a record of pneumatic tests performed, including test pressure, hold time, and the results of the test.

(c) Initial leak rate test - a record of leak test, including test pressure, hold time, and an error analysis of the test data.

4. Vendor drawings include outline drawings, assembly drawings, and shop detail drawings.

5. Vendor-certified stress reports contain the structural analysis and design calculations and associated design drawings of the various structural elements and components of the primary containment vessel.

c. All welding procedure qualifications and welder performance qualifications are in accordance with ASME Code Section IX. The welding design, fabrication, inspection, and acceptance, as a minimum, conform to the requirements of Subsection NE of Section III of the ASME Code. For magnetic particle or liquid penetrant inspection, the acceptance criteria conforms to ASME Code Section III, Subsection NE.

d. All procedural requirements for nondestructive testing as a minimum conform to the requirements of Appendix X of ASME Code Section III.

e. Erection tolerances - The steel primary containment vessel erection tolerances meet the requirements of NE-4221 and NE-4222 of ASME Code Section III for fabrication and erection. The tolerance for fabrication of remaining plates are as stated in the AISC Specification for the Design, Fabrication, and Erection of Structural Steel for Buildings, Code of Standard Practice for Steel Buildings and Bridges.

3.8.2.6.3 Special Construction Techniques

No construction techniques unusual to vessel erection methods were required for the steel primary containment vessel.

3.8.2.7 Testing and Inservice Inspection Requirements

3.8.2.7.1 Inspection of Material and Parts for Fabrication

All materials used in constructing pressure retaining parts of the primary containment vessel were examined before fabrication to detect defects affecting functional integrity of the vessel. Materials were inspected to detect defects and cracks introduced during fabrication and to ensure that the work was properly executed and completed. In addition, pressure retaining parts were inspected to ensure that they conformed to the required shape and size after forming.

3.8.2.7.2 Testing of Primary Containment Vessel During Field Erection

During erection of the bottom ellipsoidal head of the primary containment vessel, vacuum box soap bubble tests of longitudinal and circumferential seams were made by placing a vacuum box over the weld areas after application of a soap solution to the test areas and adjacent base material. No leaks were detected in the area by this test and therefore no repairs and retesting were necessary.

On satisfactory completion of soap bubble testing, a halide testing program over the welded seams followed, inasmuch as internal concrete was placed prior to completion of vessel erection. After successful completion of the halide test program, concrete was placed in the interior region of the bottom ellipsoidal head.

3.8.2.7.3 Testing of the Erected Primary Containment Vessel

On completion of field erection of the primary containment vessel and prior to the installation of penetration internals, a test plan was established to outline the tests and inspections to be performed on the primary containment vessel and appurtenances. The tests were performed in accordance with the applicable requirements of the ASME Code to demonstrate the structural integrity and leaktightness of the completed vessel. The tests consisted of an initial and a final reference volume test, an initial and a final soap bubble test, a structural integrity overpressure test for structural acceptability, and an initial leak rate test. The initial soap bubble test was performed at 5 psig, and the final soap bubble test was performed at 45 psig between the 51.8 psig structural integrity test and the 45 psig initial leak rate test.

The initial and final reference volume tests, the first and last of the tests performed in the order of sequence, evaluated and leak tested the reference volumes in accordance with ANSI N45.4-1972.

The following tests and inspections outlined in the test plan were performed in the following order, in accordance with the plan.

a. Test prerequisites

1. *Prior to pressurization of the primary containment vessel, preparatory steps were taken such as installation, calibration, and checking out the operability of all systems and instrumentation equipment including that required for measuring containment pressure, temperature, and humidity.*

2. *Before the tests began, the suppression chamber was filled with water to el. 466 ft 2.75 in.*

b. Initial reference volume test

Before the primary containment vessel was pressurized the reference volume system was evaluated and leak tested in accordance with ANSI N45.4-1972. This test included the helium leak test and the vacuum retention test. The initial reference volume test was successfully completed.

c. Initial soap bubble test

The initial soap bubble test was performed at 5 psig, the first increment of pressure of the structural integrity pressurization test. Soap suds were applied to all weld seams and seals, including seams and seals of all piping and electrical penetrations which were not backed up by water, the equipment hatch, drywell personnel access lock, and suppression chamber access hatch. Where the weld seams of the primary containment vessel penetrations were below the water level of the suppression chamber, visual leak detection was performed. Only the inner door seals of the personnel access lock were soap bubble tested at this time, since the personnel access lock weld seams were tested in the shop. The outer door of the personnel access lock was in the open position and remained open during this test. Weld maps with signoffs for each weld to be soap bubble tested were used for each soap bubble test. This test was successfully completed.

d. Structural integrity pressurization test

This test is also referred to as the structural acceptance overpressure test. The test was performed by pressurizing the primary containment vessel drywell and suppression chamber in increments, holding at pressures of 5, 10, 15, 20, 25, 30, 35, 40, 45, 50, and 51.8 psig. The initial soap bubble test was performed at 5 psig. The outer door of the personnel access lock was left open as it was in the initial soap bubble test. The final test pressure level of 51.8 psig was maintained for at least 1 hr simultaneously in the vessel and on the inner door of the personnel access lock. The increments of holding levels were reached by allowing the pressure to rise 1 psig above the desired level and then reducing the pressure to the desired level. The final holding level of 51.8 psig did not include the 1 psig increase. The final holding test pressure of 51.8 psig is 15% more than the 45 psig design pressure and is in accordance with Subarticle NE-6300 of the Summer 1972 Addenda of ASME Code Section III, Nuclear Power Plant Components, Subsection NE, Class MC components. The structural integrity test was completed successfully.

e. Final soap bubble test

On completion of the structural integrity pressurization test, the primary containment vessel was depressurized from 51.8 psig to 45 psig. A 10 minute hold period at 45 psig was observed and then the inner door seals of the personnel access lock were soap bubble tested. The outer door of the personnel access lock was then closed and the air lock was pressurized to 45 psig. At this point the outer door seals of the personnel access lock were soap bubble tested. When soap bubble testing of the outer door seals was completed, the entire primary containment vessel was soap bubble tested as described in Section 3.8.2.7.3. The final soap bubble test was successfully completed.

f. Initial leak rate test

After the final soap bubble test, an initial leak rate test was performed on the primary containment vessel. During the test, the suppression chamber remained filled with water to el 466 ft 2.75 in. placed therein during the test preparation period described in Section 3.8.2.7.3. During the initial leak rate test, the inner door of the personnel access lock was open and the outer door closed. The primary containment vessel was completely sealed off. Since both the drywell and suppression chamber above the water level at el. 466 ft 2.75 in. are designed for the same pressure, the entire primary containment vessel was tested at the same time without the necessity of providing closures from the drywell.

The test pressure of 45 psig was used. The test pressure was arrived at by depressurizing the vessel from 51.8 psig to 45 psig upon completion of the structural integrity test.

The necessary instrumentation was provided and installed and furnished the data required to calculate and verify the leakage rate. The equipment used was capable of measuring with an accuracy consistent with the measurements made. Continuous hourly measurements were taken until it was shown that the integrated leakage rate from the primary containment vessel did not exceed the specified maximum leak rate of 0.5% of the total weight of contained air in any 24-hr period at test temperature and pressure. Measurements taken were in accordance with procedures outlined in ANSI N45.4-1972.

The leak rate was calculated by the reference volume method and verified by the absolute volume method. The reference volume method followed ANSI N45.4-1972. The leak rate arrived at by both the reference volume and the absolute volume methods was determined by a straight line least-squares fit of the results for the entire period during which data was taken.

g. Final reference volume test

On completion of the initial leak rate test, the primary containment vessel was depressurized to 0 psig and the outer door of the personnel access lock was opened. At this point a vacuum retention test was performed on the reference volume system. The vacuum retention test was successfully completed and the water in the suppression chamber was discharged.

All tests were successfully completed.

3.8.2.7.4 Tests on Electrical and Mechanical Penetrations

All electrical penetration nozzles were pressure tested by two methods. The first test consisted of a shop hydrostatic test of 150 psig prior to shipment of the nozzle to the field. The second pressure test of the electrical penetration nozzles was performed in conjunction with the overall overpressure test of the containment vessel. The pressure for this test was 1.15 times the design pressure of 45 psig as prescribed by ASME Code Section III, Class MC.

All primary containment vessel pipe penetrations were pressure tested by two methods. All internal piping, together with the flued head fitting (if applicable), was initially hydrostatically tested in the shop. Test pressures used were based on the design pressure for the particular system for which the penetration is designed to serve. On completion of the overall containment vessels the penetration was field tested in conjunction with the overall overpressure test of the containment vessel. The pressure of this test was 1.15 times the design pressure of 45 psig as prescribed by ASME Code Section III, Class MC, the same as for the electrical penetrations noted above.

3.8.2.7.5 Tests on Personnel Access Lock

On completion of erection of the primary containment vessel, the air lock was given an operational test consisting of repeated operation of each door and mechanism to determine that all parts operate smoothly without binding or other defects. All defects encountered were corrected and retested. The process of testing, correcting defects, and retesting was continued until no defects were detectable.

Pressure testing of the air lock was performed in conjunction with the containment vessel testing, as described in Section 3.8.2.7.3. During this operation, all double gasketed door seals were tested by pressurizing the space between the gaskets and checking the sealing area for leaks using the test outlined in Section 6.2.6.2.

Design features of the air lock which permit testing are described below:

a. Figures 3.8-10, 3.8-11, and 3.8-12 provide longitudinal and transverse sectional elevations of the personnel access air lock. The figures also identify mechanical and electrical penetrations on the inner and outer faces of both the containment bulkhead and the atmosphere bulkhead;

b. Figure 3.8-13 illustrates the door vacuum relief tube and test connection. This is a design provision which permits between-seal tests on the air lock door seals;

c. Figures 3.8-14 and 3.8-15 illustrate typical mechanical penetrations in the atmosphere and containment bulkheads. The penetration seals and test connections are a design provision that permits between-seal tests on bulkhead penetrations. Each such bulkhead penetration is sealed with a cartridge type seal unit having double dynamic seals, and each bulkhead penetration is provided with the test connection to test these seals;

d. Figure 3.8-16 illustrates a typical electrical penetration in the atmosphere and containment bulkheads. The penetration is accomplished by means of electrical fittings installed into the bulkheads. The fittings pressure seal the electrical leads passing through the bulkhead; and

e. The personnel air lock door seals and the bulkhead penetration seals are tested on a regular post installation periodic basis, subsequent to the tests after erection described in Section 3.8.2.7.3. These tests are of two types: air lock pressure test and individual seal tests.

The air lock design permits pressure testing of the entire air lock at a pressure of P_a. Special air lock features associated with this test include 12 removable test clamp mechanisms on the inner (air lock to containment) door. These clamps prevent the inner door from becoming unseated during leak testing and are located on and are accessible from the inside of the air lock. These clamps are installed for the duration of the internal air lock pressure test.

The air lock is pressurized through the emergency air penetrations. This test confirms sealing capability at a pressure of Pa for all air lock penetrations.

The individual mechanical and door seals are testable as detailed above. The door seals are tested individually on a schedule based on air lock use and as allowed by the containment leakage rate testing program plan as referenced by the Technical Specifications. The door seal pressure test is at 10 psig and is designed to confirm seal integrity.

3.8.2.7.6 Tests on Penetration Field Welds

Leaktightness tests of field welds connecting the penetrations to the primary containment vessel, including welds connecting the penetration sleeves to the vessel shell, were made.

Penetrations welded directly to the containment vessel shell and field welds on the containment vessel shell were tested with the completed containment vessel during the soap bubble, overpressure, and leak rate testing described in Section 3.8.2.7.3.

3.8.2.7.7 Preoperational Leakage Rate Test and Periodic Leakage Rate Tests

On completion of construction of the primary containment system, including installation of all portions of mechanical fluid, electrical and instrumentation systems penetrating the primary containment vessel, and prior to any reactor operating period, preoperational and periodic leakage rate tests are performed. The various leakage rate tests and associated acceptance criteria are in accordance with Option B of Appendix J to 10 CFR Part 50. The steel primary containment system overall leakage rate is tested by the implementation of type A tests. The detection of local leaks and the measuring of leaks across each pressure-containing or leakage limiting boundary is facilitated by the use of type B tests. The steel containment isolation valves and systems are tested by using type C tests. For each of the three types of tests the associated acceptance criteria is as discussed in Appendix J to 10 CFR Part 50. This compliance includes periodic testing, performance of appropriate tests after major modifications, and the initial preoperational tests. A visual inspection of accessible interior and exterior containment surfaces will be performed in conjunction with the leak rate testing. In addition, periodic visual inspections are performed as described in Sections 3.8.3.7 and 3.8.2.7.8. In addition, leakage rate tests will be reported as required in Appendix J. The tests will verify the leaktight integrity of the primary containment vessel and penetrations below the leak rate of 0.5% of the total contained weight of air per day. Type A, B, and C leak rate tests and satisfaction of commitments to 10 CFR 50, Appendix J, are discussed in Section 6.2.6.

Electrical penetrations are provided with double seals and are separately tested at the containment maximum calculated internal pressure (38 psig). The test taps and seals are so located that tests of the electrical penetrations can be conducted without entering or pressurizing the drywell or suppression chamber.

Containment closures which are fitted with resilient seals or gaskets are tested at the containment maximum calculated internal pressure (38 psig) to verify leaktightness. The covers on flanged closures, such as the equipment hatch cover, the drywell head, and personnel access lock doors are provided with double seals so that they can be tested for leaktightness without pressurizing the entire containment system.

In addition, provision is made so that the space between the air lock doors can be pressurized to the full drywell test pressure. Since both doors on the lock swing in toward the drywell

vessel, structural members are provided to brace the inner door during this test. The resilient seals on the personnel access lock are tested at a reduced pressure.

3.8.2.7.8 Examination of Coatings on Immersed Surfaces

Periodic visual examination of concrete structures, structural steel, and the coatings on immersed surfaces inside primary containment will normally be conducted during refueling outages. A continuing examination program has been developed based on the combined observations from the first and successive visual examinations. The frequency of the visual examinations will be based on the findings and apparent degradation rates, and may not necessarily be repeated each refueling outage. If the visual examination of the containment coating indicates that significant deterioration has occurred, the affected areas will be checked to determine the extent of material loss and repairs will be made if necessary.

3.8.3 CONCRETE AND STEEL INTERNAL STRUCTURES OF STEEL CONTAINMENT

3.8.3.1 Description of Internal Structures

The following provides descriptive information of the various internal structures to define the primary structural aspects and elements relied on to perform their safety-related functions. Figure 3.8-1 gives an overall view of the internal structures of the steel containment.

The following internal structures are discussed:

a. Reactor pedestal,

b. SSW,

c. Drywell floor structural system and support elements,

d. Radial beam framing systems,

e. Stabilizer truss,

f. Refueling bellows seals,

g. Reactor steam supply system hangers and supports, and

h. Reinforced-concrete lining inside the bottom head of the steel primary containment vessel.

The safety-related functions of the internal structures include the following:

a. To provide support during normal operation and seismic disturbances and thereby prevent the occurrence of a LOCA, and

b. If a LOCA does occur, to act to mitigate its consequences by protecting the containment and other engineered safety features from the effects induced by the accident such as jet forces and whipping pipes.

The capability of structures internal to the steel containment to withstand the hydrodynamic effects resulting from actuation of SRV and specific loads associated with postulated LOCAs are discussed in Appendix 3A.

3.8.3.1.1 Reactor Pedestal

The general arrangement and principal features of the reactor pedestal are shown in Figure 3.8-17 and 3.8-18.

The reactor pedestal is a vertical cylindrical shell-type reinforced-concrete foundation. This foundation supports the RPV and the SSW. The reactions transmitted by the SSW and the RPV to the pedestal are due mainly to seismically induced loads, pipe break pressures, and pipe rupture restraints attached directly to the SSW and the loads transmitted to the SSW by the radial beam systems. Other pipe rupture restraints are attached directly to the reactor pedestal.

The reactor pedestal is also an important component in the structural system supporting the RPV against seismic disturbances and postulated pipe breaks. This system includes the SSW, reactor pedestal, and the stabilizer truss all in conjunction with the primary containment vessel, the biological shield wall, and the reactor building foundation mat.

In plan, the reactor pedestal is located on the centerline of the RPV and, therefore, on the centerline of the primary containment vessel. In elevation, the reactor pedestal is located directly under the RPV and SSW.

The bottom of the RPV skirt and the SSW are anchor-bolt-connected directly to the top of the reactor pedestal. The bottom of the reactor pedestal is keyed into the reinforced-concrete liner inside the bottom head of the primary containment vessel. Load transmitted from the reactor pedestal to the reactor building foundation mat is by means of the concrete liner inside the containment vessel bottom head, the continuous concrete fill under the containment vessel bottom head and by means of the inner circular skirt attached to the containment vessel bottom head, and anchor-bolted to the reactor building foundation mat. The skirt provides a direct link from the pedestal to the mat. Such load transfer is accomplished without imposing direct load onto the containment vessel bottom head as discussed in Section 3.8.3.4.1.

The features of the reactor pedestal concrete are shown in Figures 3.8-17 and 3.8-18 and include haunches for the support of radial beams and openings for CRDs. Information including plans and sections describing features at the connections of the RPV and SSW to the top of the reactor pedestal are given in References 3.8-5, 3.8-6, and 3.8-7. Information including plans and sections showing the reactor pedestal as part of the drywell floor pressure barrier between the drywell and suppression chamber, and plans and sections showing the monolithic construction at the joint between reactor pedestal and drywell floor, is presented in References 3.8-8 and 3.8-9.

Except at haunches and at any other special features, the reactor pedestal has an inside diameter of 20 ft 3 in., an outside diameter of 30 ft 4 in. and, therefore, a shell thickness of 5 ft 0.5 in. Its height is approximately 84 ft 0 in. The shell is reinforced on both faces by horizontal hoop and vertical meridional reinforcing steel and is designed and constructed integrally with the SSW and RPV, the drywell floor slab, and the reactor building foundation mat.

The inside and outside surfaces of the reactor pedestal are coated with a special decontaminable coating. This coating protects the pedestal surfaces against attack by either aggressive demineralized water or radioactive contamination and facilitates washdown.

3.8.3.1.2 Sacrificial Shield Wall

See References 3.8-5, 3.8-6, 3.8-7, 3.8-23, and 3.8-24 for descriptive information, primary structural functions, structural arrangement, and principal features of the SSW.

3.8.3.1.3 Drywell Floor Structural System and Support Elements

The general arrangements and principal features of the drywell floor structural system and support elements are given in Figures 3.8-17, 3.8-3, 3.8-19, and 3.8-20.

The drywell floor is part of the BWR containment system, utilizing the pressure suppression concept in a Mark II over-under containment configuration. The drywell floor is a leaktight pressure barrier dividing the containment vessel into a drywell portion above the floor and a suppression chamber (wetwell) below the floor and directly under the drywell. The drywell portion, including the drywell floor slab, serve to contain the effects (i.e., mass and radiation) of a LOCA and to direct the steam released from a reactor primary system pipe break into the suppression chamber. The suppression chamber provides a pool of water which serves as a heat sink capable of transforming the energy, in terms of pressure and temperature, that is released from a LOCA following a postulated rupture of the primary coolant piping. The energy transformation is achieved by directing the steam mixture through the drywell floor downcomer vent pipes into the suppression pool where the mixing effect condenses the steam and results in lower pressure and temperature. Noncondensible gases are carried over and

collected in the suppression free space and vented back to the drywell by way of vacuum breaker valves.

See Figures 3.8-1, 3.8-3, 3.8-17, and 3.8-19 and References 3.8-8 and 3.8-9 for information and figures relative to the function of the floor structural system and support elements in providing a leaktight drywell-wetwell pressure barrier.

The drywell floor structural system consists of

a. An outer annulus made of a 2-ft 0-in.-thick reinforced-concrete slab supported by structural steel beams in composite action, by reinforced-concrete columns and by the reinforced-concrete pedestal, and

b. An inner circular reinforced-concrete slab, inside the reactor pedestal, 5 ft 0 in. thick, lower in elevation than the outer slab by approximately 6 ft 10 in., and constructed monolithically with, and supported by, the reactor pedestal.

Additional elements supporting the drywell floor are

a. A continuous circular closure girder embedded in the drywell floor along its outer periphery as shown in Figure 3.8-3;

b. A drywell floor peripheral seal assembly. The seal assembly is discussed in Section 3.8.3.4.3.3; and

c. Shear lugs intermittently located along the outer periphery of the drywell floor and consisting of male lugs welded to the circular flanged girder and female lugs welded to the primary containment vessel.

There are 83 24-in. and 16 28-in. diameter downcomer vent pipes which provide the flow paths for uncondensed drywell steam into the suppression chamber pool. The upper part of each downcomer is embedded in and supported by the reinforced-concrete slab of the drywell floor. A horizontal steel plate ring, welded to each downcomer and embedded in the slab, serves as a downcomer support and as a seal in preventing leakage through the drywell floor. A jet deflector is provided at each downcomer to prevent the direct impingement of a fluid jet onto the downcomer from any pipe break.

A special decontaminable epoxy coating is applied to the drywell floor to reduce the permeability of the concrete slab and to provide additional leaktightness between the drywell and the suppression chamber.

3.8.3.1.4 Radial Beam Framing Systems

Structural steel beams span radially from support points on the SSW and reactor pedestal to the primary containment vessel to form radial beam systems at various levels. The beam seats provided on the primary containment vessel to support the radial beams are designed to support the beams vertically and tangentially and to allow the beams to move freely in the radial direction. The beam seats are also designed to account for differential motions of the primary containment vessel at one end of the beam and the SSW and reactor pedestal at the other end. The radial beam framing systems are erected to serve several purposes. They provide:

a. Supports for mechanical and electrical equipment, such as the recirculation pumps, monorails, valves, air handling units, cable tray runs, and piping systems; during normal operation and seismic disturbances,

b. Platform areas for access to equipment and materials and areas for performing inservice inspection and maintenance, and

c. Supports for pipe whip restraints designed to withstand postulated high energy pipe breaks (see Section 3.6.2).

Various radial beam support systems which are typical are discussed below.

At el. 512 ft 9.5 in. (see Figure 3.8-20) radial beams support the recirculation pump and motor; furnish pipe restraint supports primarily for the residual heat removal (RHR) shutdown cooling supply and return loops; provide support for piping, electrical trays and ventilating duct hung loads; and provide grating floor areas where required for access to material and equipment.

Figure 3.8-21 shows the type of steel framework erected to withstand high-energy pipe rupture loads in the unlikely event of a postulated main steam or feedwater pipe break provides the pipe restraint required to prevent damage to the adjacent redundant main steam and feedwater piping and adjacent structural elements. This framework interfaces with the circumferential pipe whip protection support ring attached to the primary containment vessel at el. 516 ft 6 in. The interface arrangement is one which is comprised of shear lugs which permit the transmission of tangential shear loads and axial loads from the framework and allow for differential vertical motions between the primary containment vessel and the structural framework (see Section 3.6.2).

Figure 3.8-20 shows a radial beam framing system at el. 524 ft 3-7/8 in. provides the platform area required for access to the feedwater valves.

The radial beams at el. 531 ft 0.25 in., shown in Figure 3.8-20, furnish the catwalk needed for inservice inspection of the RPV inlet and outlet nozzles.

The radial beam framing system at el. 541 ft 3.75 in., shown in Figure 3.8-22, is a platform that primarily supports the main steam and reactor feedwater piping at the main steam relief valve location. It also serves as a pipe restraint framework for the main steam and feedwater pipe lines. The steel framework is supported directly by a continuous circular ring girder attached directly to the primary containment vessel at el. 542 ft 7.25 in.

The radial beam platform at el. 557 ft 6.25 in. supports a monorail system used for servicing the main steam relief valves, (see Figure 3.8-23), while another platform at el. 548 ft 6.25 in. provides access to the same valves.

3.8.3.1.5 Stabilizer Truss

The reactor building stabilizer truss in Figure 3.8-24 and the RPV stabilizer in Figure 3.8-25 are important components in the structural system supporting the reactor vessel. This support system includes the reactor pedestal, reactor vessel, and SSW inside the primary containment vessel. The system is designed to interact with the reactor building and the primary containment vessel via their connections at the reactor building foundation mat level, drywell floor level, and the top of the SSW level through the reactor vessel shear lugs/shear lug stabilizers/SSW/stabilizer truss interfaces.

The stabilizer truss is a circular truss with 16 horizontal members hinged at eight panel points at the top of the SSW and at eight panel points at the containment vessel by means of horizontal pin plate/gusset plate connections. The gusset plates are rigidly field-welded to the top of the SSW at one end of each member and to the containment vessel at the other end. The hinges allow vertical translation of the members resulting from differential thermal growth between the SSW and the containment vessel. The reactor vessel, SSW, stabilizer truss, and primary containment vessel are interconnected and as a unit are restrained tangentially but free to move vertically and radially with respect to the biological shield wall. This tangential restraint is accomplished by means of shear lug assemblies at the common panel points on the primary containment vessel and biological shield wall (see Figure 3.8-24). The tangential forces due primarily to earthquake and pipe rupture are in turn transmitted directly to the biological shield wall. Truss restraint to differential radial expansion of the SSW and the containment vessel imposes some load radially at the eight panel points on the containment vessel and is accounted for in the design (see Figure 3.8-24).

The reactor vessel is supported laterally near the top by means of its stabilizer lugs and the stabilizers shown in Figure 3.8-25. The lugs are integral parts of the RPV wall, and the stabilizers are rigidly attached to the top plate of the SSW. Only shear tangential to the vessel is transmitted by this lug and stabilizer arrangement, allowing the vessel to “grow” freely both radially and vertically relative to the SSW.

3.8.3.1.6 Refueling Bellows Seals

The drywell of the primary containment vessel is isolated by means of the drywell floor and its peripheral seal (discussed in Section 3.8.3.1.3) and by means of an inner refueling bellows seal, of flexible stainless steel, at the top head flange of the reactor vessel (see Figure 3.8-26). The inner refueling bellows seal, which is welded to both the reactor vessel and the bulkhead plate, serves to seal the gap between the reactor vessel and the primary containment vessel.

The polyurethane-filled gap between the primary containment vessel and the biological shield wall is kept dry by means of an outer refueling bellows seal at the top head flange of the primary containment vessel. The outer refueling bellows seal is welded between the primary containment vessel and the biological shield wall which seals the space between the primary containment vessel and the biological shield wall.

3.8.3.1.7 Reactor Steam Supply System Hangers and Supports

The steam supply system piping and pumps are supported by various types of hangers which in turn are supported by the structural steel radial beam framing systems; and by pipe supports, the SSW, the drywell floor, and the drywell portion of the reactor pedestal. A description of these supports is found in Section 5.4.

3.8.3.1.8 Reinforced-Concrete Lining Inside the Bottom Head of the Primary Containment Vessel

The reinforced-concrete lining inside the bottom head of the primary containment vessel (Figure 3.8-1 and 3.8-17) facilitates the design and construction of concrete structures in the suppression chamber by providing the means, through a like material for attaching their bases, particularly for attaching the base of the reactor pedestal with a continuous connection to the reactor building foundation mat that transfers all the load directly to the mat, with no residual concentrated load transferred to the bottom ellipsoidal head. In addition, the liner inside the vessel bottom head and the concrete fill on the outside of the bottom head sandwich the bottom head in such manner as to enhance the distribution of uniform type loads. The concrete liner is anchored to the vessel bottom head by means of headed stud shear connectors welded to the vessel bottom head.

3.8.3.2 Applicable Codes, Standards, Specifications, and Regulatory Guides

This section lists the codes, standards, specifications, regulatory guides, and other accepted industry guidelines that were adopted, to the extent applicable, in the original design and construction of the structures inside the primary containment vessel. Modification to these structures may use the latest editions to eliminate repetitious listing for each structure, the codes, standards, specifications, and regulatory guides are listed in Table 3.8-4 and given a

reference number. For each structure inside the primary containment vessel the applicable reference numbers in Table 3.8-4 are given in the following.

3.8.3.2.1 Reactor Pedestal

a. 1A, 2A, 2B, 3, 4, 5A, SB,
b. 6 through 9,
c. 11 through 18,
d. 20 through 25,
e. 30 through 36,
f. 38, 40, 42, 43, 45, and
g. 50 through 54.

3.8.3.2.2 Sacrificial Shield Wall

See References 3.8-5 and 3.8-6 for applicable codes, standards, specifications, and Regulatory Guides. References 3.8-23 and 3.8-24 provide information relative to as-built conditions and compliance to applicable welding codes.

3.8.3.2.3 Drywell Floor Structural System and Support Elements

The structural system and support elements refer to the

a. Reinforced-concrete slab,

b. Reinforced-concrete columns,

c. Reinforced-concrete pedestal,

d. Circular closure girder embedded in the slab along the outer periphery of the floor,

e. Drywell floor peripheral seal and jet deflectors,

f. Shear lugs, and

g. Downcomers and jet deflectors.

3.8.3.2.3.1 Reinforced-Concrete Slab.

a. 1A, 2A, 2B, 3, 4, 5A, 5B,
b. 6 through 9,
c. 11 through 18,

d. 21, 25,
e. 32, 33, 34,
f. 35, 36, 38, 40, 42, 45, and
g. 50 through 54.

3.8.3.2.3.2 Reinforced-Concrete Columns. Same as in Section 3.8.3.2.3.1, except that reference 18 and 21 are not applied.

3.8.3.2.3.3 Reinforced-Concrete Reactor Pedestal. See Section 3.8.3.2.1.

3.8.3.2.3.4 Circular Closure Girder.

a. 1A,
b. 18, 20, 21, 25,
c. 33, 34,
d. 40, 41, 42, and
e. 50 through 54.

3.8.3.2.3.5 Drywell Floor Peripheral Seal.

a. 18, 20, 22, 23, 25,
b. 33, 34,
c. 40, 41, 42, 43, 46, and
d. 50 through 54.

3.8.3.2.3.6 Peripheral Seal Jet Deflectors. Same as Section 3.8.3.2.3.5, except that reference 43 is not applied.

3.8.3.2.3.7 Shear Lugs. Same as Section 3.8.3.2.3.5, except that reference 43 is not applied.

3.8.3.2.3.8 Downcomers

a. 1A,
b. 18, 20, 21, 22A,* 22B,* 23, 25,
c. 33, 34,
d. 40, 41, 42, 46, and
e. 50 through 54.

3.8.3.2.3.9 Downcomer Jet Deflectors. Same as Section 3.8.3.2.3.5, except that reference 43 is not applied.

* See Section 3.8.3.4.9.

3.8.3.2.4 Radial Beam Framing Systems

a. 1A,
b. 18, 20, 25,
c. 33, 34,
d. 40, 41, 42, and
e. 50 through 54.

3.8.3.2.5 Stabilizer Truss

Same as Section 3.8.3.2.4, except that reference 1A is not applied.

3.8.3.2.6 Refueling Bellows Seals

a. 22, 23, 25,
b. 33, 34,
c. 40 through 49, and
d. 50 through 54.

3.8.3.2.7 Reactor Steam Supply System Hangers and Supports

See Section 5.4.14 for the codes and standards applicable to the steam supply system hangers and supports.

3.8.3.2.8 Reinforced-Concrete Lining Inside Bottom Head of Primary Containment Vessel

a. 1A, 2A, 2B, 3, 4, 5A, SB,
b. 6 through 9,
c. 11 through 17,
d. 21, 25,
e. 32, 33, 34,
f. 38, 40, 42, 45, and
g. 50 through 54.

3.8.3.3 Loads and Load Combinations

The following, pertaining to load conditions, load categories, definition of load terms, loads and load combinations, apply to all the major loads encountered and/or postulated for concrete and structural steel internal structures described in Section 3.8.3. All the loads referred to are not necessarily applicable to all structures and their elements. Applicable loads and applicable load combinations for which each structure is designed depends on the conditions to which the particular structure could be subjected.

Hydrodynamic loads resulting from actuation of SRVs and those associated with specific postulated LOCA loads, which were addressed in the DAR are included in Appendix 3A.

Sections 3.8.3.3.1 through 3.8.3.3.3 may be used in conjunction with the appropriate tables on loads and load combinations (Tables 3.8-5 and 3.8-6).

The criteria used for the concrete and steel internal structures of the steel containment complies with the codes, standards, specifications, and regulatory guides listed in Section 3.8.3.2.

3.8.3.3.1 Load Conditions

The load conditions are the following:

a. Service load conditions

Under service load conditions, the loads are those encountered during construction, testing, normal operation, shutdown, and severe environmental such as the OBE and the design basis wind, and

b. Factored load conditions

Under factored load conditions, the loads are abnormal loads due to postulated accidents such as LOCAs due to pipe rupture, shutdown, earthquake, and tornado.

3.8.3.3.2 Load Categories

The load categories for loads under service load conditions and factored load conditions are the following:

a. Service load conditions

1. Construction

All events and loads during structural construction, excluding those during testing;

2. Testing

All events and loads applied during structural integrity tests and preoperational tests such as hydrostatic tests and pressure tests. Each testing event is considered to be mutually exclusive of other testing events;

3. Normal operation and shutdown

   All events and loads that could reasonably be expected during the operation, shutdown, and normal maintenance of the power plant. The magnitude of these events and loads are based on the probability of occurrence of at least once in the design life of the plant;

4. Severe environmental

   All site-related environmental events and loads that could infrequently be encountered during the plant life such as the OBE, design basis wind, and the flood of record;

b. Factored load conditions

1. Extreme environmental

   All loads due to site-related environmental events which are credible but highly improbable. These events include the SSE, design basis tornado, and probable maximum flood;

2. Abnormal

   All loads due to postulated accident events. They include pressure, temperature, pipe whip, jet impingement, and pipe reactions due to each rupture postulated for the design basis pipe accidents. This loading condition also includes plant-related nonenvironmental missiles. The loads from each postulated accident event are considered to be mutually exclusive of other postulated accidents;

3. Abnormal/severe environmental

   Loads due to the highly improbable simultaneous occurrence of abnormal and severe environmental loading categories. Only the specified combination of these categories, as determined by the credible cause-and-effect events, are considered;

4. Abnormal/extreme environmental

   Loads due to the extremely improbable simultaneous occurrence of the abnormal and extreme environmental loading conditions. Only the

specified combinations of these conditions as determined by the credible cause-and-effect events, are considered.

3.8.3.3.3 Load Definitions

The following definitions of load terms apply to the major loads encountered and/or postulated for CGS, under the service load condition and/or the factored load condition, for concrete and structural steel structures:

a. Normal loads

D = Dead loads or their related internal moments and forces, including any permanent equipment loads, hydrostatic loads, and soil loads. For equipment supports, it also includes static and dynamic head and fluid flow effects.

L = Live loads or their related internal moments and forces, including any movable equipment loads such as crane loads, and other loads which vary in intensity and occurrence. For equipment supports, it also includes loads due to vibration and any support movement effects. Appropriate impact factors are included for such moving loads as from trolleys and cranes.

T_o = Thermal effects and loads during normal operating or shutdown conditions, based on the most critical transient or steady-state condition.

See Table 3.8-1 for drywell and suppression chamber temperatures.

R_o = Pipe, cable trays, and duct reactions during normal operating or shutdown conditions, based on the most critical transient or steady state condition. The reactions include

1. Self-weight including contents,

2. Most severe transient or steady-state thermal condition at normal operating or shutdown conditions, and

3. Effects of unbalanced pressure and thrust.

P_o = Normal operating external pressure differential pressure loads resulting from pressure variation either inside or outside the containment;

b. Construction Loads

The definitions for D, L, T_o in Section 3.8.3.3.3 (a) and W in Section 3.8.3.3.3 (d) are applicable, except that the construction load values are used;

c. Testing loads

The definitions for D and L given in Section 3.8.3.3.3 (a) are applicable, except that the test load values are used. In addition, the following loads are also considered:

P_t = Pressure during the structural integrity and leak rate tests. The primary containment vessel test pressure is 51.8 psig. For the drywell floor test pressure see Sections 3.8.3.3.4 and 3.8.3.7.

T_t = Thermal effects and loads during the tests;

d. Severe Environmental Loads

E = Loads generated by the OBE. The seismic effects include loads from structure, equipment, piping, cable trays dynamic soil pressures, hydrodynamic pressures, and all other items that could be considered as inertial forces for seismic analysis. The seismic excitations are discussed in Section 3.7.

W = Loads generated by the design basis wind as discussed in Section 3.3;

e. Extreme environmental loads

E′ = Loads generated by the SSE.

Seismic excitation from the SSE is discussed in Section 3.7. The seismic effects include loads from structures, equipment, piping, cable trays, dynamic soil pressures, hydrodynamic pressures, and all other items that could be considered as inertial forces for seismic analysis;

f. Abnormal loads

Abnormal loads are loads generated by the design basis accident under consideration.

P_a = Maximum differential pressure equivalent static load within or across a compartment generated by the postulated pipe break, and including an appropriate dynamic load factor to account for the dynamic nature of the load and an appropriate margin to account for uncertainty in the calculations. A small break case is also investigated.

1. Internal P_a = 45 psig,
2. External P_a = 2 psig.

T_a = Effects of thermal environment on the structure generated by a postulated pipe break. This includes T_o for all other areas not affected by the pipe break.

1. Peak drywell = 340°F,
2. Peak suppression chamber = 275°F.

R_a = Effects of thermal environment on the pipe reactions on the structure and equipment reactions on the structure generated by a postulated pipe break. This includes R_o for all other areas not affected by the pipe break.

R_r = Local effects in the structure (e.g., pipe support and whip restraints) generated by a postulated pipe break including appropriate dynamic load factors to account for the dynamic nature of the loads. These loads include

1. Reactions from pipe supports and whip restraint, Y_r,
2. Jet impingement, Y_j,
3. Missile impact due to a postulated ruptured pipe, Y_m.

Y_r = Equivalent static load on the structure generated by the reaction on the broken high-energy pipe during the postulated break, and including an appropriate dynamic load factor to account for the dynamic nature of the load.

Y_j = Jet impingement equivalent static load on a structure generated by the postulated break, including an appropriate dynamic load factor to account for the dynamic nature of the load.

Y_m = Missile impact equivalent static load on a structure generated by or during the postulated break, as from pipe whipping, and including an appropriate dynamic load factor to account for the dynamic nature of the load.

3.8.3.3.4 Internal Structures in the Suppression Chamber

The structures are grouped for convenient referencing as either drywell structures or suppression chamber structures. The various internal structures in the steel containment are discussed in Section 3.8.3.1. Of these structures, structures referred to as drywell structures are listed in Section 3.8.3.3.5 and structures referred to as suppression chamber structures are as follows:

a. Reinforced-concrete structures

1. Drywell floor slab,

2. Drywell floor support columns,

3. Reactor pedestal, and

4. Reinforced-concrete lining inside bottom head of primary containment vessel;

b. Structural steel structures

1. Drywell floor support steel immediately on underside of drywell floor slab,

2. Drywell floor continuous circular closure girder,

3. Drywell floor peripheral seal assembly,

4. Drywell floor peripheral seal jet deflectors,

5. Drywell floor peripheral shear lugs,

6. Downcomer vent pipes,

7. Downcomer jet deflectors,

8. Radial beam framing system supporting downcomers against horizontal seismic loads, and

9. Catwalks.

The reinforced-concrete structures are designed using the loads, load combinations and load factors listed in Table 3.8-5.

The structural steel structures are designed using the loads, load combinations and load factors listed in Table 3.8-6. Appropriate dynamic load factors are applied to the calculated dynamic loads in the design of each structural steel element.

See Appendix 3A for a discussion of hydrodynamic loads associated with activation of SRVs and LOCAs.

Structures in the suppression chamber, inclusive of the drywell floor, are designed to resist in combination with other possible concurrent normal and/or accident loads the effects of hydrostatic and hydrodynamic forces associated with water set in motion by seismic disturbances.

Internal structures are designed for the reactions of all other structures or equipment that they may support.

The effects of concrete volume changes are minimized by designing the concrete mix for minimal volume changes and by prescribing construction techniques to minimize differential strains.

The drywell floor is designed for the following differential pressures which may develop across the floor during the containment response following a postulated pipe break accident:

a. During the short term response, a differential pressure equal to +25 psig due to overpressurization of the drywell relative to the suppression chamber and applied to the drywell side in a downward direction, and

b. During the long term response, a differential pressure equal to -6.4 psig due to a partial vacuum in the drywell relative to the suppression chamber and applied to the suppression chamber side in an upward direction.

The drywell floor is designed for a test pressure of +25 psig overpressurization of the drywell relative to the suppression chamber applied to the drywell side.

The drywell floor is also designed for the following loads in addition to its own dead and live loads:

a. The reactor pedestal support reactions (vertical, base shear, and overturning moment),

b. Pipe rupture loads, including jet impingement loads and reactions, transmitted by pipe restraints connected directly or indirectly through radial beam framing systems serving as pipe rupture support truss systems,

c. Thermal and pressure loads imposed during normal operating conditions, and

d. Forces induced during an OBE or SSE.

The reactor support pedestal is designed to resist the following loads, in addition to its own dead load and live leads:

a. Dead and live loads from the reactor vessel, SSW and radial beam framing systems,

b. Thermal and pressure loads under normal operating and accident conditions,

c. Pipe rupture loads transmitted by pipe to the reactor pedestal by pipe restraints connected directly or indirectly through the radial beam framing systems serving as pipe rupture support truss systems,

d. Forces induced during an OBE or SSE, and

e. Thermal, pressure, earthquake, and pipe rupture loads that act on the RPV and SSW and are transmitted to the reactor pedestal via the support reactions.

3.8.3.3.5 Internal Structures in the Drywell

The structures are grouped for convenient referencing as either drywell structures or suppression chamber structures. The various internal structures in the steel containment are discussed in Section 3.8.3.1. Of these structures, structures referred to as suppression chamber structures are listed in Section 3.8.3.3.4; and structures referred to as drywell structures are the following, all of which are treated as structural steel internal structures:

a. SSW,
b. Radial beam framing systems,
c. Stabilizer truss,
d. Refueling bellows seals, and
e. Reactor steam supply system hangers and supports.

The loads, load combinations, and load factors used in the design of the SSW are presented in References 3.8-6 and 3.8-7. Further information relative to the as-built wall is contained in References 3.8-23 and 3.8-24. The loads, load combinations, and load factors used in the design of the structures in the drywell are presented in Table 3.8-6. Appropriate dynamic load factors have been applied to the calculated dynamic loads in the analysis of each structural steel element for load application time.

The radial beam framing systems serving as floor levels and/or pipe restraint supports are designed for the following loads in addition to their own dead loads:

a. A uniform platform live load,

b. Loads from pipe hangers, ventilation ducts, and electrical cable trays,

c. Forces induced during an OBE or SSE,

d. Pipe whip restraint forces, including the jet impingement load, due to a rupture of the supported pipes (see Section 3.6.2), and

e. Temperature and pressure effects during normal operating and accident conditions.

Internal structures are designed for the reactions of all other structures or equipment that they may support including the steam supply system hangers and supports.

The reactor vessel stabilizer truss is designed primarily for lateral seismic loads. However, all the loads associated with a support at the top of the SSW such as pressure and pipe whip loads on the SSW are included in the design of the stabilizer truss. The applicable load combinations are found in Table 3.8-6.

3.8.3.4 Design and Analysis Procedures

3.8.3.4.1 Reactor Pedestal

The general approach in the analysis and design of the reactor pedestal is to determine the values of the controlling stress resultants on the basis of elastic analysis under design loadings and to provide the required capacity of the pedestal in accordance with the strength method of the ACI 318-71 Code (Reference 3.8-10). Design loadings are in conformance with the loads and load combinations of Section 3.8.3.3. The report on design and analysis procedures for the upper portion of the pedestal, including transmission into the pedestal of reactions from the SSW and the RPV, is contained in Reference 3.8-6.

The principal loadings controlling the design of the pedestal are due to seismic action and pipe break effects which include annulus pressurization, pipe reactions, and pipe whip forces. Controlling overall stress resultants are pedestal bending moment, shear, and axial force. The values of these stress resultants due to seismic action are obtained from a dynamic analysis of a discrete mathematical idealization of the entire reactor building structure as described in Section 3.7. For other loadings, the pedestal is analyzed as a cylindrical beam fixed at its base and simply supported at the level of the drywell floor.

The distribution over the cross section of the axial stresses and shearing stresses due to the aforementioned stress resultants is that associated with single flexural theory. The axial force per unit length of arc due to the overall bending moment varies linearly with the distance from the neutral axis. The shearing force per unit length of arc is circumferential (tangential) in direction and varies sinusoidally in magnitude with maxima at the neutral axis. Meridional and hoop steel requirements are determined at the locations of maximum stress; this reinforcement is then provided uniformly around the pedestal.

Specific analyses are made at pedestal discontinuities such as openings and boundaries to determine the radial shears and radial moments. Additional reinforcement consisting of radial ties and meridional steel is provided as required.

At the base of the pedestal, provision is made for transmission of the pedestal reactions. Capacity for the transmission of shear is available due to axial compression, shear friction and the continuous key of the pedestal into its base. The axial tensite forces are transmitted by continuing the meridional reinforcement into the base where the connection to the cadweld ring assembly is made. This assembly, in turn, connects through weldments to the inner steel skirt which is anchored to the basemats.

3.8.3.4.2 Sacrificial Shield Wall

The design and analysis procedures for the SSW are described in Reference 3.8-7. Further information relative to the as-built wall is contained in References 3.8-23 and 3.8-24.

3.8.3.4.3 Drywell Floor Structural System and Support Elements, Including the Peripheral Seal Assembly, Peripheral Seal Jet Deflectors, and Peripheral Shear Lugs

3.8.3.4.3.1 Drywell Floor Slab and Columns. The drywell floor slab and columns are each analyzed elastically to determine the values of controlling stress resultants under the design load combinations for concrete structures as in Section 3.8.3.3. The required capacity for each of these structures is then provided in accordance with the strength method of the ACI 318-71 Code (Reference 3.8-10).

Under vertical loading, the floor slab is considered to act as a one-way slab in the radial direction, supported by tangential beams below, and extending from the support at the pedestal

to the face end at the primary containment vessel. The slab is analyzed as continuous over the supporting beams except for the spans between downcomers which are taken to be simple spans. Significant loads include dead load and differential pressure on the slab (P_a) but the principal load controlling slab design is the pipe break jet impingement force (R_r). Slab capacity is provided to resist the calculated design shears and moments.

The floor slab is also analyzed for the effect of other significant loads besides vertical loads. The effect of differential temperature between drywell and wetwell including slab bending is checked. Also, the connection between the pedestal and the floor slab is checked for capacity to transmit the pedestal horizontal seismic reaction.

The wetwell columns are subjected to a combination of axial (vertical) and lateral (horizontal) loading resulting from the superimposed loads from the drywell floor and seismic action respectively. The significant loads from the drywell floor, which contribute to the design axial load, are the floor dead load, live load, vertical seismic load (E'), differential pressure, and jet impingement. Column flexure due to horizontal seismic action is determined from analysis of the column as an elastic member subjected to lateral inertial forces corresponding to the column seismic acceleration. The capacity of the column to sustain the design stress resultants is determined by the strength method of ACI 318-71 Code. With concurrent axial load and bending moment, the magnified moment due to axial load is utilized in conformance with the Code.

3.8.3.4.3.2 Structural Steel Members. The steel beam structural system of the drywell floor consists of a grid of radial and tangential beams which support the drywell floor slab. The 17 radial beams, which divide the floor area into 17 similar sectors, are supported by the pedestal and the wetwell columns and extend as cantilevers beyond the columns to the vicinity of the primary containment vessel. In each sector, the tangential beams carry the drywell floor slab and span between the radial beams.

Each of the radial and tangential beams is analyzed by conventional elastic methods as an overhanging or simple span beam, as appropriate, to determine the design moments and shears. Loadings for the radial beams and tangential beams are as discussed above for the wetwell columns and the drywell floor slab. The beams are designed as composite beams in conjunction with the slab above. The elastic working stress design method of the 1969 AISC Design Specification (Reference 3.8-11) for composite construction is followed.

3.8.3.4.3.3 Drywell Floor Peripheral Seal Assembly. The drywell floor peripheral seal assembly is shown in Figure 3.8-3. The drywell floor peripheral seal is made of steel and is welded to the primary containment vessel and to the underside of the circular closure girder embedded in the drywell floor. It is a 270 degree segment of a stainless-steel pipe in cross section, circular in plan, and is drained to the floor drain system which is routed to a point outside of primary containment. Design and construction are compatible with primary containment requirements of Class MC components. Assembly of the seal and attachment

thereof to both the floor and the primary containment vessel is by means of welding in accordance with the ASME B&PV Code Section III, Class MC. The floor seal is designed to accommodate the maximum vertical and radial differential thermal movements which may occur during plant startup, normal operation, and shutdown. It is also designed to withstand, in an elastic manner, the effects associated with a LOCA, including temperature changes and pressure differentials ranging from +25 psig to -6.4 psig, and seismic loads. No other loads are applied to this seal. Jet deflectors are provided at the seal to prevent the direct impingement of a fluid jet force on the seal due to any pipe break. To prevent differential lateral and torsional movements, shear lugs are furnished along the outer periphery of the drywell floor to ensure that movements of the interfacing drywell floor, floor seal, and primary containment vessel are in unison during seismic events.

A continuous circular closure girder, which is of structural steel and embedded in the reinforced-concrete drywell (or diaphragm) floor along its periphery, is provided. Its basic function is to complete the drywell floor closure. It consists of a cylindrical vertical web plate extending from the bottom of the radial steel beams supporting the drywell floor slab to the top of the drywell floor slab at el. 499 ft 6 in. and with annular flanges as illustrated in Figure 3.8-3. In addition to its sealing function, the closure girder also provides the means for connecting the drywell floor peripheral seal to the drywell floor, for attaching the male components of the shear lug assembly, and for supporting the concrete floor. The closure girder withstands the design basis accident loads, drywell floor and slab loads, tangential seismic shear loads, and loads from the drywell peripheral seal.

The closure girder is designed according to the 1969 AISC Specification and for normal operating load combinations, extreme environmental, and the abnormal/extreme environmental loading combinations. Among the loads included in the combinations are design basis accident loads, drywell floor and slab loads, tangential seismic shear loads, and loads from the drywell floor seal. The loads are effectively resisted by the girder in flexure, shear, bearing on the concrete slab, and in tension by the way of shear stud connectors and embedded structural steel.

3.8.3.4.3.4 Drywell Floor Peripheral Shear Lugs. Thirty-six male shear lugs, equally spaced around the drywell floor periphery, transmit horizontal load between the drywell floor and the primary containment vessel. Each of these lugs consist of an assembly of steel plates joined by welding and anchored to the concrete floor slab by stud shear connectors. Transmission of load to the primary containment vessel is via female shear lugs welded to the vessel. The joint between male and female lugs affords restraint only in the circumferential direction as relative motion in the vertical and radial directions is permitted.

Analysis and design of the shear lug assembly is in accordance with the elastic working stress design method, Part 1 of the 1969 AISC Design Specification (Reference 3.8-11). The principal load controlling the design of the lug assembly is the horizontal seismic force transmitted by the drywell floor as determined by the method in Section 3.7. In line with

elastic theory, the distribution of the shear force per unit length of periphery is taken to vary sinusoidally with maxima along the diameter perpendicular to the direction of the overall shear force. The maximum value of the distributed shear force per unit length is used to design the shear lugs.

3.8.3.4.4 Radial Beam Framing Systems

The radial beam framing systems considered are those which do not support pipe whip restraints. Analysis and design of those beam systems which do support pipe whip restraints is discussed in Section 3.6.2.3.3.2. The analysis and design of the former radial beam systems is in accordance with the elastic working stress design method, Part 1 of the 1969 AISC Design Specification (Reference 3.8-11). Conventional elastic beam analysis is used. The significant loads in the load combinations are dead, live, reactions under operating conditions, and seismic loads.

3.8.3.4.5 Stabilizer Truss

The stabilizer truss is a pin-connected plane truss which transmits horizontal force between the top of the SSW and the primary containment vessel biological shield wall, as described in Section 3.8.3.1.5. This transmitted force represents reactions from the SSW and the RPV. The supports for the truss joints at the SSW are fixed at the wall so that two components of reaction (radial and tangential) may occur. At the primary containment vessel the truss joint support is constrained only in the circumferential direction so that the only reaction is tangential force.

Analysis and design of the stabilizer truss is in accordance with the elastic working stress design method, Part 1 of the AISC Design Specification (Reference 3.8-11). The principal loads controlling the design of the truss result from seismic action and pipe break effects including pipe whip, pipe jet, and annulus pressurization. The forces transmitted by the stabilizer truss under these loadings are determined by analysis of the overall structural system from the pedestal to the primary containment vessel including the SSW and the RPV. In this regard, the SSW is modeled as a space frame as described in Reference 3.8-7 and the RPV as a beam to give the loads transmitted by the stabilizer truss. Analysis of the stabilizer truss as a pin-connected plane truss with supports as described above is accomplished using the proprietary computer program “McDonnell-ECI, ICES, STRUDL” which is based on MIT’s STRUDL II, Version 2, Update 2 as augmented by McDonnell Douglas Automation Co., St. Louis, Missouri. The computer analysis is described in Reference 3.8-7.

3.8.3.4.6 Refueling Bellows Seals

Design and analysis procedures for the inner and outer refueling bellows seals are based on applicable ASME Code Sections II, VIII, and IX; the Standards of the Expansion Joint Manufacturers Association, and Interpretation Case Number 1177-7 (see Figure 3.8-26).

3.8.3.4.7 Reactor Steam Supply System Hangers and Supports

Design and analysis procedures for the steam supply system hangers and supports are found in Section 5.4. Design and analysis procedures for the General Electric stabilizers are based on applicable ASME pressure vessel codes.

3.8.3.4.8 Reinforced-Concrete Lining Inside Bottom Head of Primary Containment Vessel

The design accounts for strains caused by creep, shrinkage, and elastic shortening. The methods and data used for the analysis are based on the applicable codes, standards, and specifications in Table 3.8-4 and the results of past experience. (See Figures 3.8-1 and 3.8-17).

The concrete lining is analyzed using elastic methods and designed in accordance with ACI 318-71 by the strength method.

The headed stud shear connectors anchoring the concrete liner to the bottom head of the primary containment vessel are capable of transferring horizontal shear from the concrete internal structures to the bottom head of the containment vessel and of resisting relative movements between the concrete liner and the bottom head of the containment vessel. See the discussion of the reactor pedestal in Sections 3.8.3.1.8 and 3.8.3.4.1.

The analysis and design account for any postulated loading conditions that would cause net uplift at the base of certain reinforced-concrete columns.

Uplift on any portion of the pedestal base is transmitted directly into the reactor building foundation mat as discussed in Section 3.8.3.4.1.

3.8.3.4.9 Downcomer Vent Pipes

The downcomer vent pipes are designed to contain and direct uncondensed drywell steam into the suppression pool following a pipe break accident. See Section 3.8.3.1.3 and Reference 3.8-8, and Appendix 3A for further description and the design and analysis procedures used.

Stainless-steel extension pieces were added to the ends of the downcomers to prevent coating damage from plugs which are installed for the preoperational bypass leakage rate tests. Downcomers were originally provided with exit flanges for these tests. These flanges were removed because of concern about the applicability of test data taken on prototype downcomers without flanges. The downcomers are designed and constructed in accordance with ASME Section III Class 2 requirements above 1 in. above the circumferential weld joining the stainless-steel extension pieces to the bottom of the downcomers. Below this point

the downcomers are designed and constructed to ASME Section III Class 3 requirements. The only effect of this code break is to eliminate radiography requirements for the circumferential weld.

3.8.3.5 Structural Acceptance Criteria

3.8.3.5.1 Reinforced Concrete

The maximum permissible stresses and strains used are given in Table 3.8-12. These permissible stresses and strains are used to keep the structures below the range of general yield, both under service load conditions and factored load conditions.

For each of the loading combinations listed in Table 3.8-5, the required sectional strength of concrete (U) is calculated using the strength design method of ACI 318-71 with the applicable capacity reduction factor.

The symbol U denotes the section strength required to resist design loads or their related internal moments and forces based on the strength design methods described in ACI 318-71.

The reinforced-concrete internal structures of the steel containment include the drywell floor, the drywell floor support columns, the reactor pedestal, and the reinforced-concrete lining inside the bottom head of the primary containment vessel. (See Figures 3.8-17 and 3.8-18).

3.8.3.5.2 Structural Steel

See Table 3.8-7 for the criteria used for

a. Required limits of section strength, S and Y, and
b. Section moduli

The symbol S denotes the required section strength based on the elastic design methods and the allowable stresses defined in Part 1 of the AISC "Specification for the Design, Fabrication, and Erection of Structural Steel for Buildings," February 12, 1969 (Reference 3.8-11). The symbol Y denotes the section strength required to resist design loads based on plastic design methods described in Part 2 of the AISC Specifications (Reference 3.8-11). For steel internal structures of steel containments, the elastic working stress design method of Part 1 of the AISC specification (see Table 3.8-4) is used. All the loads considered in the loading combinations are factored loads. The plastic design method of Part 2 of the AISC Specification (see Table 3.8-4) is used as may be required for such structures as pipe restraint supports.

3.8.3.6 Materials, Quality Control, and Special Construction Techniques

Structures internal to the containment, except for the SSW, are not in a region of high-energy neutron flux.

It has been determined that in the 40-year life expectancy of the station the outside face of the SSW will experience a neutron fluence of less than 2×10^{16} nvt. The projected fluence at the SSW outer wall for 60 years of operation, including margin to account for a power uprate, will remain below 2×10^{16} nvt.

The construction materials and material quality control procedures for reinforced-concrete structures internal to the containment conform to the standards set forth in Section 3.8.4.6. Structural steel standards are also found in Section 3.8.4.6.

Materials and quality control programs comply fully with the "Building Code Requirements for Reinforced Concrete," ACI 318-71 (Reference 3.8-10), for concrete and with the AISC Specification (Reference 3.8-11), for steel as applicable.

See Table 6.1-1 for materials for specific components of internal structures in the containment.

Quality control meets the requirements of ANSI N45.2.5 (Reference 3.8-12), and Regulatory Guide 1.55, Revision 0. Reinforcing bars are generally not welded in any structure, except where mechanical cadweld fasteners are not feasible.

No construction techniques unusual to methods used during CGS construction were employed or required for the concrete and steel internal structures of the steel containment.

3.8.3.7 Testing and Inservice Surveillance Programs

All of the structural components in Section 3.8.3 are visually inspected during outages as defined by the inspection program. The frequency of periodic inspections is based on the results from the findings from previous inspections, as defined in the inspection program and summary finding reports. The inspections are made to determine if degradation to structural integrity has occurred. Inspections of concrete structures are conducted to check for possible deterioration, excessive cracking, or spalling of concrete. Similar inspections are made of structural steel members to check for deterioration of surface coatings and abnormal deformations or warpage.

Rigorous inspection was carried out during construction and in conjunction with the quality control assurance procedures for structural materials outlined in Section 3.8.4.6.

The drywell floor metal peripheral seal is designed, procured, fabricated, installed, and inspected in accordance with the 1971 Edition of the ASME Code Section III, Subsection NE, Class MC Components, Winter 1973 Addenda, except that hydrostatic or pneumatic testing of the seal is not performed, and the seal is not N-stamped. Leaktightness of the seal is tested,

however, as described below and in Reference 3.8-14. Butt welds joining the peripheral seal segments are radiographed, and welds joining the peripheral seal to the containment and to the diaphragm slab closure girder are liquid penetrant examined.

Periodic drywell-wetwell leakage tests are performed. See Section 6.2 for details of the periodic testing methods that are included in the containment leakage rate testing program.

The initial bypass leak rate test included tests at 25 psid and 15 psid in addition to the low differential pressure required in the periodic tests. Successful completion of the 25 psid bypass leak rate test served to prove the structural integrity of the drywell floor.

3.8.4 REDACTED

3.8.5 FOUNDATIONS

3.8.5.1 Descriptions of Foundations

All foundations described below are supported by Quality Class I compacted structural backfill as described in Section 2.5.4.5. As a means of providing a level working surface for construction of the mat type foundations, a 4-in. thick unreinforced concrete leveling slab is installed on the compacted subgrade.

The groundwater level at the site is sufficiently lower than the deepest foundation in the complex. For discussion of groundwater levels at the site, see Sections 2.5.4.6 and 3.4.

3.8.5.1.1 Reactor Building

The primary containment vessel and the reactor building enclosing the containment vessel are both supported on a common, reinforced-concrete mat foundation having a thickness of 16 ft. The mat is reinforced with top and bottom layers of reinforcing steel. Reinforcement is placed in an orthogonal grid pattern. The plan of the mat and the corresponding sections through the mat are shown in Figure 3.8-43.

Induced horizontal shears in the mat due to seismic, wind, and tornado disturbances are resisted by frictional resistance between the mat and the supporting media. Shear resulting from shear wall action is transferred to the mat through shear reinforcement. Lateral shears on vertical load-carrying elements are transferred to the mat through keys in the mat.

A gap is provided between the reactor building foundation mat and adjacent building foundations. The gap is of sufficient horizontal dimension to preclude interaction of Seismic Category I foundations with Seismic Category II foundations, during the SSE and the OBE.

The capability of the foundation mat to withstand loads associated with steam relief valve actuation and with vent clearing, and to withstand specified loads associated with postulated LOCAs which act in the drywell and wetwell of the steel containment vessel, are discussed in Appendix 3A.

For additional description of the reactor building foundation mat, see Section 3.8.2.1.

3.8.5.1.2 Radwaste and Control Building

The radwaste areas and the control room area are contained in one building unit supported on a reinforced-concrete mat foundation having a nominal thickness of 8 ft. The control room area occupies approximately 30% of the radwaste and control building plan at the north end of the building. For description of the radwaste and control building, see Section 3.8.4.1.2. The mat has the same structural characteristics as the reactor building mat described in Section 3.8.5.1.1.

The control room portion of the building unit shares common structural elements with the radwaste portion, which is Seismic Category I. Because of this interconnection and the resulting seismic interaction between the building portions, the entire building complex is modeled as a unit for Seismic Category I analysis (see Section 3.7.2).

3.8.5.1.3 Diesel Generator Building

The foundations for the diesel generator building consist of continuous reinforced-concrete wall footings under all building perimeter and interior load bearing walls and reinforced-concrete spread footings under each interior building column. The diesel generator units are each

supported on an individual reinforced-concrete foundation, isolated from the above mentioned building foundations. Induced horizontal shears in the foundations due to seismic, wind and tornado disturbances are transferred to the supporting media through the frictional resistance between the foundations and the supporting media. For a description of the diesel generator building, see Section 3.8.4.1.4.

The diesel oil storage tanks are buried and supported directly on Quality Class I structural backfill as referenced in Section 3.8.5.1. Since the groundwater level is lower than the invert of the tanks (see Section 3.8.5.1), an empty storage tank will not have buoyancy forces acting upon it.

3.8.5.1.4 Standby Service Water Pump House and Spray Pond

The standby service water pump house and spray pond are two structures joined together along one face of the pump house.

The spray pond is an inground water retention structure. The structure consists of reinforced-concrete cantilevered retaining walls, with an independent reinforced-concrete bottom slab on which is supported the spray piping. Spray pipe supports are secured to the slab with bolts screwed into expansion anchors drilled into the concrete slab. The pond is provided with a depressed sump in the bottom slab at one corner, at the pump house pump inlet bay.
A membrane vapor barrier is placed between the structural slab and the leveling slab.

The standby service water pump house foundation consists of three types of foundations. The pump inlet bay portion of the pump house is depressed to the same elevation as the pond sump whose bottom is a reinforced-concrete mat foundation having a thickness of 3.5 ft. The concrete walls which form the pump inlet bay and support portions of the building are also supported on this mat. The face of the pump house which is adjacent to the spray pond is supported by a reinforced-concrete retaining wall common to both the pump house and the spray pond. The balance of the pump house is supported by reinforced-concrete columns and spread footings. For description of the standby service water pump house and spray ponds, see Section 3.8.4.1.5.

Horizontal shears in retaining walls and piers are transmitted to their respective foundations through shear keys. Shears in the foundations are transferred to the supporting media through the frictional resistance between the foundation and the supporting media.

3.8.5.1.5 Condensate Storage Tank Retaining Area

The condensate storage tank retaining area consists of a reinforced-concrete mat foundation, at grade, having a thickness of 2 ft 4 in. The mat provides support to the two condensate storage tanks and the perimeter reinforced-concrete dike walls which are designed to contain the contents of the tanks in the event of their failure. The mat edges are thickened to provide the

strength required to sustain all of the seismic loads acting on the perimeter dike walls. The perimeter dike walls are keyed to the mat foundation to resist the seismically induced lateral horizontal shears in the walls. The mat rests directly on compacted backfill without any membrane waterproofing. Horizontal shears in the mat are transferred to the supporting media through the frictional resistance between the mat and the supporting media.

3.8.5.1.6 Turbine Generator Building

The turbine generator building foundation mat, like the superstructure, is designed to withstand the effects of an SSE and maintain its structural integrity thus providing adequate protection for the main steam lines designed as Seismic Category I, as described in Section 3.8.4.1.3. The turbine generator building is supported on a reinforced-concrete mat foundation having varying thicknesses ranging from 9 ft to 12 ft. For a description of the turbine generator building, see Section 3.8.4.1.3. The mat has the same structural characteristics as the reactor building mat described in Section 3.8.5.1.1.

3.8.5.1.7 Non-Seismic Category I Safety-Related Foundations

The makeup water pump house is a non-Seismic Category I structure but is a safety-related installation designed to withstand the design basis tornado and tornado-generated missiles. For additional description of the pump house, see Section 3.8.4.1.6. The makeup water pump house is supported on two types of foundations. The eastern end of the pump house is supported by a deep, square pump pit which in turn is supported on a reinforced-concrete mat foundation having a thickness of 3 ft. The remainder of the building is supported on continuous reinforced-concrete wall footings.

3.8.5.2 Applicable Codes, Standards, and Specifications

This section lists the codes, specifications, standards of practice, regulatory guides, and other accepted industry guidelines which are adopted to the extent applicable in the design and construction of the foundations for Seismic Category I structures. Modifications to the foundations may use the latest editions. To eliminate repetition, these codes, standards, and specifications are described and discussed in Table 3.8-4 and given a specification reference number. Listed below are the reference numbers for the foundations.

a. 1A through 9,
b. 11 through 17,
c. 25 and 28,
d. 32 through 36, and
e. 38, 41, 42, 43, 45, 49, 52, 53 and 54.

In addition, the "Supplementary Soils Investigation" prepared for Columbia Generating Station by Shannon & Wilson, Inc., soil consultants, is applicable to the design of the foundations (Reference 3.8-20).

3.8.5.3 Loads and Loading Combinations

The loads and loading combinations listed, defined, and discussed in Section 3.8.4.3 are applicable to the design of the foundations. Hydrostatic loads from the flood of record are not applicable to this installation as discussed in Section 3.4.

3.8.5.4 Design and Analysis Procedures

3.8.5.4.1 General

The analysis of Seismic Category I and non-Seismic Category I safety-related foundations is done using conventional elastic techniques. Seismic response coefficients used in the determination of loads applied to the foundations have been determined by mathematical models of the structures. All loads, interior and exterior to the structures, are transferred to their respective foundations through the elastic deformation of slabs, bearing and shear walls and columns. For additional discussion of the design and analysis procedures of the buildings, see Section 3.8.4.4.

The foundations are supported on compacted structural backfill. For discussion of site geology and soils characteristics and criteria, see Section 2.5. All foundation bearing pressures are within the allowables set forth in Appendix 2.5E. Maximum settlements based on allowable bearing pressures on the soil are tabulated in Table 5 contained in Appendix 2.5E.

Structural design of all foundations is in accordance with ACI 318-71.

3.8.5.4.2 Reactor Building Foundation Mat

The reactor building foundation mat is analyzed and designed by the finite element method utilizing NASTRAN, which is an accepted finite element computer program for static and dynamic structural analysis and is discussed in Section 3.12. The exterior building walls and the biological shield wall transmit the lateral loads and forces and overturning moments to the mat foundation, and are included in the model to account for their stiffening effect on the mat.

3.8.5.4.3 Radwaste and Control Building

The radwaste and control building mat foundation is analyzed and designed as a beam on an elastic foundation based on Abbett's "American Civil Engineering Practice" (Reference 3.8-18). The mat is divided into three strips, in each direction, with each strip considered as a beam. The lateral loads and forces acting on the structure are transmitted to

the mat foundation through interior shear walls, and the exterior, perimeter foundation walls. The mat beam strips are computer analyzed by FLXMAT, a proprietary computer program developed by Burns and Roe, Inc., for the analysis of flexible mat foundations on elastic foundations, which is discussed in Section 3.12.

3.8.5.4.4 Diesel Generator Building

Building wall footings and column spread footings are conventionally analyzed utilizing static and seismic loads and forces determined in the mathematical model seismic analysis of the superstructure in combination with other loads. The diesel generator foundations are analyzed utilizing the operating static and dynamic loads determined by the respective diesel generator manufacturers. The diesel generator foundations are seismically analyzed utilizing seismic response coefficients determined by mathematical model analysis.

3.8.5.4.5 Standby Service Water Pump Houses, Spray Ponds, and Condensate Storage Tank Retaining Area

The standby service water pump house building foundations are conventionally analyzed, utilizing seismic loads and forces determined in the mathematical model seismic analysis of the superstructure, in combination with other loads.

The spray pond bottom slab (nominally 7-in. thick) is considered to be a sufficiently flexible structure relative to the underlying supporting soil to essentially follow the displacements and deformations of the soil surface during a seismic event. The horizontal seismically induced shears at the points of pipe supports are resisted by horizontal plate action of the bottom slab which is horizontally constrained by the perimeter retaining wall footings. The spray pond walls are conventionally analyzed as rigid retaining walls subjected to static and dynamic lateral earth pressures.

The bottom slab of the condensate storage tank retaining area is a conventionally analyzed and designed mat foundation subjected to static and seismically induced loads acting on the storage tanks and the perimeter dike walls. The perimeter dike walls are analyzed and designed as vertical cantilever walls keyed and doweled to the thickened edge of the bottom slab mat foundation. The horizontal loads on the walls consist of hydrodynamic forces induced by the retained water within the diked area during a seismic event causing a failure of the condensate tanks, static water pressure of the contained water and the seismic forces acting on the wall itself.

3.8.5.4.6 Turbine Generator Building

The turbine generator building mat foundation is analyzed and designed as a beam on an elastic foundation based on Abbett's "American Civil Engineering Practice" (Reference 3.8-18). The mat is divided into three longitudinal beam strips covering the entire width of the building and

three representative transverse beam strips. The vertical and lateral loads and forces are transmitted to the mat foundation by perimeter foundation walls, interior shear walls, and columns through shear keys and shear friction reinforcement. The mat beam strips are computer analyzed by FLXMAT, a proprietary computer program developed by Burns and Roe, Inc., for the analysis of flexible mat foundations on elastic foundations and is discussed in Section 3.12.

3.8.5.4.7 Makeup Water Pump House

The mat foundation at the bottom of the pump pit and the continuous wall footings are conventionally analyzed. The mat foundation is analyzed as a two-way slab supported on four sides by the pump pit walls.

3.8.5.5 Structural Acceptance Criteria

Foundations are designed in compliance with ACI 318-71 and satisfy the strength and the serviceability requirements specified therein. The structural acceptance criteria for reinforced concrete described in Section 3.8.4.5.1 is applicable to the foundation designs.

The factors of safety against overturning and sliding for safety-related structures are as follows:

Safety-Related Structure	Safety Factors	
	Overturning	Sliding
Reactor building	1.50	1.80
Radwaste and control building	3.13	2.29
Turbine generator building	6.80	2.70
Standby service water pump houses	1.24	2.30

Uplifting of foundation mats occurs for the Seismic Category I structures listed below. Maximum uplift occurs as a result of the combined effects of horizontal and upward SSEs. The maximum uplift conditions are described below.

a. Reactor building - Under maximum uplift, 48% of the mat maintains bearing contact with the soil. Maximum upward deflection is 1.1 in.;

b. Turbine generator building - Under maximum uplift, 89% of the mat maintains bearing contact with the soil. Maximum upward deflection is 0.10 in.; and

c. Radwaste and control building - Under maximum uplift, 84% of the mat maintains bearing contact with the soil. Maximum upward deflection is 0.14 in.

3.8.5.6 Materials, Quality Control, and Special Construction Techniques

The materials, quality control, and special construction techniques for foundations conform to those set forth for Seismic Category I structures and are discussed in Section 3.8.4.6.

3.8.5.7 Testing and Inservice Surveillance Techniques

Tests to evaluate compaction of the Quality Class I structural backfill were performed by determining the relative densities of the compacted soil. Laboratory tests were made in accordance with ASTM D2049 which specifies the use of a vibrating table operating at a stipulated vibrating amplitude. In tests executed for this installation, it was found that the vibrating amplitudes of the tables used were lower than specified in ASTM D2049. Shannon & Wilson, Inc., soil consultants, investigated the relative densities of the compacted soil utilizing various vibrating tables and concluded that the relative density values are valid. The Shannon & Wilson report (Reference 3.8-19) covers their investigation of the foregoing and was submitted to the NRC by Energy Northwest.

In 1984 ASTM replaced ASTM D2049 with ASTM D4253 and D4254. These procedures are equivalent. All three standards are considered acceptable for use.

Routine observations were made of the foundations to determine the extent of cracking and/or imperfections.

Inspections were made during construction in conjunction with the quality control procedures for the structural materials as stated in Section 3.8.4.6. Structural integrity and/or performance tests, other than those described above, were not conducted.

3.8.6 PIPING AND ELECTRICAL PENETRATIONS

To maintain containment integrity, penetration assemblies which penetrate the steel primary containment vessel have the following characteristics:

a. They are capable of withstanding the peak pressures and temperatures encountered during all operating and testing modes,

b. They are capable of accommodating the thermal and mechanical loads which may be encountered during all modes of operation without failure,

c. They are capable of withstanding the forces caused by impingement of fluid from the rupture of the largest local pipe or connection without failure,

d. They are capable of withstanding the maximum piping reactions due to dead weight, seismic excitation, constraint to thermal expansion and other mechanical flow induced effects that may be exerted by the piping, to which they are attached, and

e. To account for the effects of postulated pipe rupture, the penetration assemblies are capable of withstanding the maximum reactions that the pipes to which they are attached are capable of exerting.

The quantities, types, service identifications, sizes, and pertinent data of the primary containment vessel penetrations are given in Figures 3.8-51 and 3.8-52.

The capability of the primary steel containment vessel penetrations to withstand the hydrodynamic effects resulting from the actuation of SRVs and specified loads associated with postulated LOCAs is discussed in Appendix 3A.

3.8.6.1 Description

3.8.6.1.1 Piping Penetrations - Type 1

Process lines traverse the boundary between the inside of the steel primary containment vessel and the outside of the biological shield wall by means of piping penetration assemblies made up of several elements. Two general types of piping penetration assemblies are provided: type 1 (also referred to as "hot" type piping penetration assemblies) and type 2 (also referred to as "cold" type piping penetration assemblies).

Figure 3.8-54 shows a type 1 piping penetration assembly. The type 2 penetration assembly is described in Section 3.8.6.1.2.

All piping is generally attached directly to the penetration nozzle. However, hot piping and multiple piping penetrations pass through the nozzle as type 1 and type 5 penetrations, respectively. The type 5 penetration is described in Section 3.8.6.1.5.

Type 1 penetration assemblies which penetrate the primary containment vessel consist of:

a. Penetration nozzle,
b. Flued head fitting,
c. Process pipe, and
d. Guard pipe, when required.

In all type 1 penetrations, containment closure is accomplished by means of the flued head fitting. The flued head fitting is located at the outer end of the nozzle, guard pipe and process

pipe, at a suitable distance external to the primary containment vessel and biological shield wall. At this location, the flued head fitting is welded to the nozzle. With the exception of the main steam penetrations, the portion of the process pipe, which is within the penetration assembly, is an integral part of the forged flued head fitting thus eliminating pipe welds which would be inaccessible for inservice inspection (See Figure 3.8-54). The main steam fluid heads are constructed from a flued head forging welded to a length of process pipe such that the welded assembly becomes a type 1 penetration (See Figure 3.8-51, Note 7). The flued head to process pipe weld is accessible for inservice inspection.

The inner end of the nozzle is welded to the reinforcing penetration insert plate, which is part of the primary containment vessel shell. The penetrations are designed for long-term integrity.

The guard pipe is provided between the nozzle and the process pipe to form an additional annulus between the nozzle and the process pipe. The additional annulus minimizes thermal stresses at the primary containment vessel shell during normal operation. The guard pipe also prevents direct impingement of hot fluid on to the primary containment vessel shell in the unlikely event of pipe rupture within the penetration, thereby minimizing thermal shock loading. The guard pipe is guided radially, at its inner end, near the primary containment vessel shell, by means of an enveloping sleeve and shims in the annulus between it and the nozzle, to limit seismic movement. Guard pipes are generally furnished with the type 1 penetration assemblies only when the operating process pipe temperature exceeds 300°F.

Pipe insulation is provided when required in the annulus between the process pipe and the guard pipe to reduce thermal stresses and heat losses.

The piping design includes the effects of seismic and thermal motion of the primary containment vessel shell at the penetration connections. Bellows type seals are not used for CGS.

Penetration analysis includes verification of the containment adequacy of the penetrations and of the primary containment vessel in the vicinity of the penetrations. The rupture loads are applied at the outboard interface of the flued head fitting and the process pipe. Analyses are performed to demonstrate that if local contact between the nozzle and the biological shield wall sleeve is possible, the nozzle is capable of maintaining containment.

No equipment or piping is anchored to the biological shield wall. However, lateral restraint assemblies are provided outside the primary containment vessel shell at certain of the type 1 penetrations to provide, where required by a rupture analysis of the penetration nozzle on the vessel side, containment integrity for all postulated maximum nozzle loads due to a self-break of the piping (a guillotine break or side break) as well as an adjacent pipe break (impingement).

The restraint assemblies are in the form of coaxial extensions of and attached to the steel pipe sleeves in the biological shield wall. The steel pipe sleeves are fully anchored into the biological shield wall.

The design loadings and the various load combinations, as well as the allowable stress intensities, are discussed in Sections 3.8.6.3 and 3.8.6.5, respectively.

3.8.6.1.2 Piping Penetrations - Type 2

Process lines for low energy (or cold) fluids utilize penetration assemblies without flued head fittings, to penetrate the primary containment vessel shell. Type 2 penetration assemblies are illustrated in Figure 3.8-55.

The type 2 penetration assemblies consist of a process pipe which also acts as the penetration nozzle in the vicinity of the primary containment vessel wall. The inner end of the nozzle is welded to the reinforcing penetration insert plate, which is a part of the primary containment vessel shell. The piping configuration and supports on both sides of the penetration are designed to preclude overstressing of the steel primary containment vessel nozzle under any loading condition, including postulated accidents.

Five TIP guide tubes pass from the reactor building to the drywell through the primary containment vessel. The penetrations are a type 2 piping penetration modified with a welding neck flange attached outside the containment. This flange is itself modified with dual concentric O-ring grooves machined into the face, which retain elastomeric O-rings. To this is bolted a blank flange which has been drilled for both a between-O-ring test port and a central hole in which an instrument tubing “bulkhead union” fitting is retained. This single penetration point is sealed by seal welding between the bulkhead union and the blank flange. The TIP guide tubes are attached to both sides of their respective bulkhead unions by flare fittings. These penetrations are also discussed in Section 3.8.2.1.1.3.

The design loadings and various load combinations, as well as the allowable stress intensity, are discussed in Sections 3.8.6.3 and 3.8.6.5, respectively.

3.8.6.1.3 Piping Penetrations - Type 3

The primary containment vessel is furnished with a number of spare penetrations of various sizes. These penetrations have a specific possible future use, and may be used as a type 1 or type 2 process pipe penetration or, as an electrical or instrumentation penetration. The type 3 penetration assembly is illustrated in Figure 3.8-55.

Type 3 penetration assemblies consist of a nozzle which penetrates the primary containment vessel and extends outboard beyond the biological shield wall. At the latter location, the

nozzle is furnished with a permanent closure. The inner end of the nozzle is welded to the reinforcing penetration insert plate which is part of the primary containment vessel shell.

Although the type 3 spare penetrations have a specifically intended future use, they are designed so that they can be utilized as any type penetration having more severe loads. Thus, a type 3 penetration which is intended to be a future type 2 penetration is designed for loadings which may be incurred by a type 2 penetration and for loadings which may be incurred by a type 1 penetration. A stipulated pipe rupture load is included in the analysis and is as shown in Figures 3.8-51 and 3.8-52.

The design loadings and various load combinations that may be incurred by either a future type 2 or a future type 3 penetration, as well as the allowable stress intensity, are discussed in Sections 3.8.6.3 and 3.8.6.5.

3.8.6.1.4 Electrical Penetrations - Type 4

The electrical penetration assemblies provide a means for the continuity of power, control and signal circuits through the primary containment vessel while maintaining the leaktight integrity of the vessel. Each penetration assembly is designed to function in the environmental conditions specified in Table 3.8-13. Electrical penetrations are categorized into three classes. Each of the three classes of penetration assemblies is designed to meet the requirements of a particular group of electrical cables (see Reference 3.8-15). The three general classes are

a. Signal penetration assemblies for shielded signal cables for circuits that require high signal integrity (neutron monitoring penetrations), penetrations X-100A, B, C and D;

b. Low voltage penetration assemblies for power, control or instrumentation leads. Penetrations series X-101, X-102, X-105, X-104, and X-107; and

c. Medium voltage penetration for power cables. Penetrations X-103A, B, C, and D.

The basic configuration of each of these three classes of penetration assemblies is a completely enclosed, sealed unit. Each penetration assembly is designed and fabricated so as to permit leak testing of the pressure barrier from a single point outside the primary containment vessel. (See Figures 3.8-56 and 3.8-57.) The penetration assemblies are designed considering the size and physical parameters of the containment vessel penetration nozzles.

The two basic types of electrical penetration assemblies are as follows:

a. The canister type as shown in Figure 3.8-56, and
b. The unitized header plate or noncanister type as shown in Figure 3.8-57.

The canister type electrical penetration (assembly series X-103) is used for medium voltage power cables. The penetration assembly extends the length of the containment vessel penetration nozzle. A plate at each end of the penetration canister provides double barriers between which can be pressurized and monitored for leak testing purposes.

The plates are constructed of stainless steel to eliminate eddy current heating. The containment vessel pressure boundary is established by welding the penetration assembly to the outboard end of the containment vessel penetration nozzle. A weld ring is attached to the inboard end of the containment vessel penetration nozzle to provide lateral support to the penetration assembly. Bolt-on terminal boxes are attached to the inboard weld ring and to the outboard end of the penetration assembly.

The remaining electrical penetration assemblies, series X-100, X-101, X-102, X-104, X-105, and X-107 are the unitized header assembly type. The unitized header assembly consisting of the bulkhead extension and monitoring plate is welded to the outboard end of the containment vessel penetration nozzle. Electrical penetration of the pressure boundary is achieved by the insertion of sealed modules into the monitoring plate. The modules are designed with two sets of dual O-rings between which sets can be pressurized and monitored for leak testing purposes. Modules may be substituted or added to the unitized header assembly as necessary in the future.

Bolt-on terminal boxes are attached to the unitized header assembly on the outboard side of the containment vessel and to a slip-on flange welded to the inboard side of the containment vessel penetration nozzle.

A cable support tray is provided inside the containment vessel penetration nozzle.

3.8.6.1.4.1 Configuration.

a. Neutron monitoring penetration

Shielded signal cables are provided to interconnect low noise circuits between the reactor and the associated control room. Two types of signal circuits are required: Type A service consists of reactor neutron monitoring circuits with a dc analog signal (power range neutron monitoring); type B service consists of reactor neutron monitoring circuits with a pulse output signal (startup neutron monitoring);

For type A service, the wire within the penetration module consists of, at a minimum, No. 18 AWG wires that are connected to the external wiring with insulated crimp splices;

For type B service, the cable within the penetration matches those to which it is connected. The source range monitor (SRM)/intermediate range monitor (IRM) cables consist of two shields which are connected together at the connectors to form a common shield for each cable. Inline connectors mounted on the side of the terminal boxes are used for cable terminations. The connectors are insulated from the penetration.

The concentric geometry of shielded cables is maintained through the penetration assembly without interruption to either shield or conductor.

Type B connectors are insulated from ground by at least 10^8 ohms at room temperature. The insulation resistance, between the center conductor and the shield, is greater than 10^{12} ohms at room temperature;

b. Low voltage control and indication penetration

The low voltage control and indication penetration assemblies (series X-101, X-102, and X-105) are suitable for 600-V ac (or below), whose circuits are designed to supply control power for the plant auxiliary systems.

Cable connections (see Reference 3.8-15 are as follows: (1) multipin connectors mounted on the header plate or box, (2) pigtail with inline pin connector, (3) pigtail and crimp type connector to be routed to a terminal box, or (4) pigtail to be routed to a splice.

Where connectors are furnished, they are the environment-resistant type in accordance with MIL-C-5051D. The insulation resistance between conductors is not less than 10^8 ohms at room temperature. All receptacles and pin contacts for No. 16 AWG and smaller wires are insertion pin types either soldered or gold plated crimp-on;

c. Low voltage power penetration

The low voltage power penetration assembly (X-104 series) is suitable for low voltage, 600-V ac and 250-V dc. The cables used within the penetration have their copper conductors and insulations sized in accordance with the conditions specified in Section 3.8.6.5.4.1 (b).

Wire is switchboard type SIS, stranded, tinned copper with 1000 V, 90°C insulation.

Insulation resistance between conductors is not less than 10^8 ohms at room temperature. The header plates are constructed of a suitable material to minimize eddy current heating. Power penetrations are provided with two copper-constantan thermocouples for temperature monitoring;

d. Medium voltage power penetration

The medium voltage power penetration assembly, (X-103 series) is suitable for three, 8-kV high resistance grounded cable.

The cables used inside the penetration assembly have their copper conductors and insulators sized in accordance with the conditions specified in Section 3.8.6.5.4.1 (c).

Cable terminations are either a mechanical splice (crimp-on lug type) or bushings mounted on the headerplates. Basic impulse level (BIL) is 95 kV. The insulation resistance between conductors is 10^{10} ohms at room temperature. These penetrations are provided with copper-constantan thermocouples for penetration temperature monitoring.

Specific provision is made in the design of the 8-kV penetration assembly to avoid electrical stress on the cable insulation. No part of the shielded cable insulation comes in contact with the ground plane either at the header or in the assembly. Holes in the header have well-rounded edges and are large enough to provide adequate supplementary insulation or bushing for the cable.

The ends of the canister are factory welded to nonmagnetic stainless steel header assemblies containing pressure-tight high-alumina ceramic seals;

e. Low voltage power, control and indication penetration

The low voltage power, control, and indication penetration assembly (X-107 Series), is suitable for 600-V ac and 250-V dc power cables, and 600-V control cable. The cables are used for 120-V ac (or below) circuits that are designed to supply control power for the plant auxiliary systems inside of the suppression chamber.

The cables used within the penetration have their copper conductors and insulations sized in accordance with the conditions specified in Section 3.8.6.5.4.1.

The continuity of shielded cables is to be maintained through the penetration assembly using single, conductor without interruption to either conductor or shield.

Cable connections (for Reference 3.8-15) are as follows: (1) multi-pin connectors mounted on the header plate or box, (2) pigtail with inline pin connector, (3) pigtail and crimp type connector to be routed to a terminal box, or (4) pigtail to be routed to a splice (for drywell wetwell vacuum breakers).

Where connectors are furnished, they are the environment-resistant type in accordance with MIL C-5015D. The insulation resistance between conductors is not less than 10^8 ohms at room temperature. All receptacles and pin contacts for No. 16 AWG and smaller wires are insertion pin types either soldered or gold plated crimp-on.

The header plates are constructed of nonmagnetic austenitic stainless steel to minimize eddy current heating.

3.8.6.1.4.2 Ampacity. The cables through the electrical penetration assembly are sized to ensure the following:

a. Adequate cable current carrying capability (ampacity) of no less than the values indicated in Reference 3.8-15, and

b. After each penetration assembly is installed and operating continuously during normal environmental conditions, the temperature of the concrete adjacent to the containment vessel penetration nozzle does not exceed a maximum of 150°F along the length of the penetration when operating at 100% rated current load on all conductors.

3.8.6.1.4.3 Auxiliary Hardware.

a. Temperature monitoring: Each power penetration (series X-104 and X-103) assembly has two internal temperature monitoring, copper-constantan thermocouples to monitor the temperature within the assembly.

b. Terminal boxes: Terminal boxes and their mounting terminal blocks, connectors and terminal lug connectors are provided at both ends of each penetration. Terminal boxes for unitized header type penetrations are designed to permit installation of the penetration with only the removal of the outer (or front) enclosure cover. The terminal boxes are type National Electrical Manufacturers Association (NEMA) 4 boxes with an environment resistant coating. Boxes are arranged to avoid interference with adjacent penetrations.

All terminal boxes located inside of containment have holes punched in the box to allow equalization of pressure outside to inside the box during a LOCA so that the box will not implode. Plugs are installed in the holes of the boxes to help keep moisture out. These plugs are designed to push into the box during a LOCA. In addition, holes are punched in the bottom of the boxes, as required for moisture drainage.

c. Cables: Cables within penetration assemblies and/or nozzles are restrained by supporting structures to prevent cables from excessive motion due to high electrodynamic or mechanical forces. Cable supports also minimize compressive loading of cable insulation.

d. Radiation shielding: Provision is made for fastening and supporting up to 150 lb of radiation shielding on the inside end of the penetration assembly.

3.8.6.1.4.4 Shop Painting of Electrical Penetrations. All ferrous metal surfaces, interior and exterior, are furnished with a coating to withstand the environmental conditions listed in Table 3.8-13.

3.8.6.1.5 Instrumentation Piping Penetrations - Type 5, 6, and 7

Figure 3.8-58 illustrates the instrumentation penetration assembly. The penetration assembly consists of a penetration nozzle and lengths of instrumentation pipes. The instrumentation pipes pass through the penetration nozzle from the reactor building side, through the containment vessel shell, to the interior of the containment vessel. The inner end (containment vessel end) of the nozzle is welded to the reinforcing penetration insert plate the penetration are designed to preclude over-stressing the steel primary containment vessel nozzle under any loading condition, including postulated accidents.

The penetration of the instrumentation pipes through the primary containment nozzle end plates is sealed by welding which meets the requirements of the ASME Code Section III, Subsection NE, Class MC components.

3.8.6.2 Applicable Codes, Standards, Specifications, and Regulatory Guides

3.8.6.2.1 Codes, Standards, and Specifications

Piping and electrical penetration assemblies are designed and constructed to meet the requirements of the following applicable codes, standards and specifications.

a. The following sections of the ASME B&PV Code, 1971 Edition, including Summer 1972 Addenda and all previous addenda (ASME Code):

Section II, Material Specifications, Part A - Ferrous (ASME Code Section II)

Section III, Nuclear Power Plant Components, Subsection NE, Class MC Components (ASME Code Section III)

Section V, Nondestructive Examination (ASME Code Section V)

Section IX, Welding Qualifications (ASME Code Section IX);

b. Steel Structures Painting Manual, Volume 2, Systems and Specifications, 1964 Edition with the 1968 Supplement and the January 1971 Editorial changes.

Specifications SSPC-SP-6, SP-8 and SP 10;

c. American Society for Testing and Materials

A370 - Standard Methods and Definitions for Mechanical Testing of Steel products

A380 - Recommended Practice for Descaling and Cleaning Stainless Steel Surfaces;

d. Institute of Electrical and Electronics Engineers

IEEE 317-1972 IEEE Standard for Electrical Penetration Assemblies in Containment Structures for Nuclear Power Generating Stations

[NOTE: For the replacement of the electrical penetration modules, use the version of IEEE 317 that is in effect at the time of purchase and documented in the design specification.]

IEEE 336-1971 - Installation, Inspection and Testing Requirements for Instrumentations and Electrical Equipment During the Construction of Nuclear Power Generating Stations

IEEE 344 - (Trial Use) - Guide for Seismic Qualifications of Class I Electric Equipment for Nuclear Power Generating Stations;

e. American Society for Testing and Materials

D635 - Test for Flammability of Self-Supporting Plastics (Fire Resistant);

f. Insulated Power Cable Engineers Association (IPCEA) and NEMA:

S-61-402 - (IPCEA) Standard for Thermoplastic - Insulated Wire WC-5-1968 - (NEMA) - Cable for the Transmission and Distribution of Electrical Energy

S-19-81 - (IPCEA) - Rubber Insulated Wire & Cable for Transmission and Distribution of Electrical Energy

S-66-524 - (IPCEA) - Standard for Cross-Linked Thermosetting

WC-7-1971 - (NEMA) - Polyethylene-Insulated Wire and Cable for the Transmission and Distribution of Electrical Energy

S-68-561I - #1 - Cables Rated 0-35000 Volts Having Ozone-Resistant Ethylene-Propylene-Rubber Insulation

P-32-382 - (IPCEA) - Short Circuit Characteristics of Insulated Cable

S-68-561I - #2 - Cables Rated 5000 Volts and Less and Having Ozone-Resistant Ethylene-Propylene-Rubber Integral Insulation and Jacket

For electrical penetration assembly, use the applicable IPCEA and NEMA Standards that are in effect at the time of purchase;

g. American National Standard for Temperature Measurement Thermocouples C96.1-1964;

h. Military Specification Electric Connector AN Type

MIL-C-5051D - Electric Connector, AN Type;

i. Underwriters Laboratories Standards (UL); and

j. National Electric Code, 1975.

The nozzle, which is part of the containment boundary, is classified as Class MC and designed in accordance with Subsection NE, Section III of the ASME Code. The Type I penetration guard pipe, which is not part of the containment boundary, is designed, tested, and of materials selected in accordance with Subsection NE, Section III of the ASME Code. The part of the

process pipe which is inside the guard pipe and the flued head fitting is of the same code class as the remainder of the process pipe.

3.8.6.2.2 Conformance with Regulatory Guides

The applicable regulatory guides are discussed in Section 3.8.2.2.4.

3.8.6.3 Loads and Loading Combinations

3.8.6.3.1 Loads

The analysis and design of piping and electrical penetrations consider the following loads:

a. Load (a) - Pressure and temperature due to LOCA,

b. Load (b) - Live and dead loads, including the primary loads applied to the containment vessel directly as well as dead weight, seismic inertia loads, and other mechanical and flow induced loads from attached pipes and equipment,

c. Load (c) - OBE,

d. Load (d) - Thermal expansion load, including loads caused by constraint due to thermal expansion of the primary containment vessel, as well as reactions from attached piping due to constraint from thermal expansion of the piping system,

e. Load (e) - SSE, and

f. Load (f) - Jet force or pressure on structures and equipment resulting from a pipe break.

Load (f) includes guillotine type break or longitudinal split of the piping in question, or pressure impingement from adjacent piping. Load (f) for penetration assemblies is tabulated in Figure 3.8-51 under the heading "Flued Head Fitting - Pipe Rupture Loads."

Load (b) includes jet forces resulting from a normal operating effluent discharge of an open-ended pipe.

3.8.6.3.2 Loading Combinations

The loading combinations (of the loads defined in Section 3.8.6.3.1) used in the design of penetrations are as follows:

a. Normal accident: loads (a) + (b) + (c) + (d) (normal condition),

b. Maximum seismic: loads (a) + (b) + (d) + (e),
c. Pipe rupture: loads (a) + (b) + (c) + (d) + (f), and
d. Pipe rupture plus maximum seismic: loads (a) + (b)+ (d) + (e) + (f).

Allowable stresses are discussed in Section 3.8.6.5.4.

All process pipe penetrations, including spare penetrations intended for future process piping, are analyzed for the load combinations defined above.

Electrical penetration assemblies are designed to withstand environmental conditions present during a postulated LOCA including the jet impingement force from a ruptured pipe to the junction boxes. The assemblies are designed to maintain containment integrity for extended periods of time in a postaccident environment.

Electrical penetrations, including penetration nozzles intended for future electrical penetration assemblies, are analyzed for a pipe rupture impingement load [load (f)].

3.8.6.4 Design and Analysis Procedures

3.8.6.4.1 Piping Penetrations

Loads on the piping penetrations due to thermal expansions of the pipes, thermal and pressure movements of the primary containment vessel, and the piping system weight are determined by a flexibility analysis of the piping system and are discussed in Section 3.9.

Seismic loads on piping penetrations are determined by the method described in Sections 3.7 and 3.9. Jet loads on nozzles are analyzed in accordance with Section 3.6.

3.8.6.4.2 Flued Head Fitting Design

The design of the flued head fittings is in accordance with both the ASME Code Section III for Class MC as well as for the same ASME Code Class shown in Figure 3.8-51 for process pipe. The flued head fitting to penetration nozzle weld is excluded from the limit of process pipe classification, and is a Class MC Weld. The flued heads are designed to withstand the loads and combinations thereof noted in Figure 3.8-51, including the containment design pressures and temperatures as noted in Table 3.8-14. The configuration of the flued head is such as to minimize stress concentrations by using gradual transitions from one thickness to another and by shaping the fitting so as to avoid any sudden changes in contour.

The flued head fitting contouring at the process pipe interfaces and the penetration nozzle interface is in accordance with the ASME Code, Section III, Figure NB-4233-1, except that the initial maximum slope of the outside surface adjoining the process pipe is 1-on-4 in lieu of the

1-on-3 slope shown in Figure NB-4233-1. The exterior shape of the fittings is as shown in Figure 3.8-54.

3.8.6.4.3 Thermal Stress Analysis for Flued Head Fittings

Thermal stress due to steady-state and/or transient condition is accounted for.

3.8.6.4.4 Primary Containment Vessel Design at Penetration Nozzle Interface

Influence coefficients are provided for all primary containment vessel penetration nozzles resulting from unit forces and moments applied at the intersection of the centerline of the penetration and the neat inside face of the containment vessel (such as W.P. 1 in Figure 3.8-54). These influence coefficients represent local shell membrane stresses and shell bending stresses at the juncture of the nozzle to shell reinforcing insert plate and the juncture of the reinforcing insert plate to vessel shell plate for unit forces and moments. The primary containment vessel stresses due to applied forces and moments are derived by use of the influence coefficients and proper combination at specified locations. The vessel is designed and analyzed for all loading combinations and satisfies the following design requirements:

a. Penetration assemblies are designed in accordance with the ASME Code Section III, Subsection NE for MC Components. Process piping is designed in accordance with the ASME Code Section III, Subsection NB or NC as required for Class 1 or Class 2 components. The ASME Code Class for each process pipe is indicated in Figures 3.8-51 and 3.8-52;

b. The type, size, and thickness of the penetration nozzle conforms to those indicated in Figures 3.8-51 and 3.8-52. Penetration reinforcement is generally a single plate insert;

c. Loads and loading combinations as described in Section 3.8.6.3;

d. The flued head fittings meet Class MC requirements, as well as the requirements of the ASME Code class specified for the attached process pipes. The flued head fittings are integral with the process pipe at the inboard side of the fitting (W.P. 3 in Figure 3.8-54).

   The flued head fittings are capable of transmitting all applicable loads from the process pipe to the penetration nozzle. Pipe rupture load (f) in Section 3.8.6.3.1 is considered as primary load and is applied at the inner and outer process pipe flued head fitting interface (W.P. 3 and W.P. 2 in Figure 3.8-54) separately.

The flued head fittings are designed in accordance with the allowable stress criteria in Section 3.8.6.5 and meet the allowable stress criteria of the applicable ASME Code Class. When ASME Code Class I is applicable, emergency condition loading criteria is applied for load combination (b) and (c) in Section 3.8.6.3.2 at all locations where the structure can be considered integral and continuous; and upset condition loading criteria is applied at locations where the structure cannot be considered integral and continuous. When emergency condition loading criteria is applicable, the design is based on elastic analysis. Limit analysis is not used.

The analytical procedures utilized for flued head fitting design was performed by means of "ISOFINITE" (see Section 3.12) using the three-dimensional finite element method. The analysis was performed for the normal and emergency conditions described previously. "ISOFINITE" calculates six stress components at the centroid of each element. These stress components are then converted into principal stress and stress intensities. The stress intensities are then compared to 1.5 S_m. The sum of the principal stresses are likewise compared to 1.5 S_m. For maximum primary plus secondary stress intensity, the allowable stress criteria is 3 S_m.

All the flued head fittings satisfy the design criteria of the ASME Code Section III; and

e. The penetration design analysis for pipe rupture and maximum seismic loadings includes verification of containment adequacy of the penetration assemblies and the primary containment vessel in the vicinity of penetrations. For this analysis, the pipe rupture loads utilized are those shown in Figure 3.8-51 for the flued head fitting. The rupture loads are applied at the outboard interface of the flued head fitting and the process pipe (Refer to W.P. 2 in Figure 3.8-54).

Steel pipe sleeves within the biological shield wall provide an annular gap around the penetration nozzles. The analysis includes verification that, if local contact between nozzles and sleeves is possible, the nozzles have sufficient strength to maintain containment. As shown in Figure 3.8-54, lateral restraint assemblies with an annular gap are provided around the flued head fittings, when required.

The steel pipe sleeves are not within the jurisdiction of primary containment and are therefore designed to AISC criteria for Class I structures.

3.8.6.4.5 Electrical Penetrations

All penetration assemblies are a part of the containment system and are capable of meeting the requirements listed in Table 3.8-13. The design, fabrication materials, inspection, and testing of the pressure retaining parts of the penetration assembly are in accordance with the ASME Code Section III, Subsection NE, Class MC components. All assemblies are code stamped in accordance with applicable requirements of the ASME Code Section III.

The power, control and instrumentation wiring complies with the standards listed in Sections 3.8.6.2.1(f) and 3.8.6.6.1 (cable and cable insulation) as applicable to a particular cable construction.

The penetration assemblies are designed to meet the requirements of IEEE Standard 317.

Electric penetration assemblies are designed by analysis, test, and combinations thereof. Design criteria for the penetration seals are as follows:

a. For normal operation, electrical loadings causing heating or electromagnetic forces do not violate primary containment integrity or disrupt the integrity of the electrical circuit,

b. Electrical rated current loadings do not exceed the requirements of the National Electrical Code with regard given to the application of derating factors to account for the effects of ambient temperature and grouping,

c. For seismic loadings, during normal operation, primary containment and electrical circuit integrity are not violated,

d. Jet force impingement may be allowed to disrupt electrical circuits but does not violate primary containment integrity,

e. For LOCA conditions, short circuit faults may disrupt electrical circuits but do not violate primary containment integrity,

f. Motor startup currents produce no detrimental effect on circuit integrity,

g. Gamma radiation exposure produces no detrimental effect on primary containment or circuit integrity,

h. Thermal cycling due to plant startup and shutdown produces no detrimental effect on primary containment nor circuit integrity,

i. The penetration assembly has leak rate less than IEEE 317 leak rate requirements (see Section 3.8.6.7), and

j. Low voltage control, instrumentation, and power operate electrically during LOCA, as specified by the plant specification.

3.8.6.4.6 Protective Coatings

Protective coatings are applied to all exposed steel surfaces of the penetration assemblies, as discussed in Section 3.8.2.4.4.

3.8.6.5 Structural Acceptance Criteria

3.8.6.5.1 Type I Piping Penetrations

The requirements of Article NE-3000 of the ASME Code Section III, as modified by Regulatory Guide 1.57, Revision 0, and discussed in Section 3.8.2.2.4 are met for each of the load combinations and for each component of type 1 penetration assemblies. In addition, the process pipe portion of the assembly is designed to the appropriate piping code class; that is, ASME Code Section III, Code Class 1 or 2.

3.8.6.5.2 Types 2 and 3 Piping Penetrations

The requirements of Article NE-3000 of Section III of the ASME Code are met for each of the load combinations and for each component of types 2 and 3 Piping Penetrations.

3.8.6.5.3 Type 4 Electrical Penetrations and Type 5, 6, and 7 Instrumentation Penetrations

Structural acceptance criteria for the containment penetration assemblies is in accordance with the rules of the ASME Code Section III, Class MC and IEEE 317-1972.

[NOTE: If replacement of the electrical penetration modules is required, the version of IEEE-317 that is in effect at the time of purchase and documented in the design specification is used.]

3.8.6.5.4 Allowable Stresses for Piping, Electrical, and Instrumentation Penetrations

Maximum allowable stress values are in accordance with the ASME Code Section III, Paragraph NE-3131.

Doubler plates (or pads), usually continuous and attached to the pressure boundary by means of fillet welds, and junctures of nozzles to containment vessel, are considered to be structures which are not integral and continuous. Therefore, the rules of the ASME Code Section III,

Paragraph NE-3131(c) (1) are applied. An example of doubler plates or pads is the welding ring discussed in Section 3.8.2.3.3.

Locally thickened vessel shell plates having a properly tapered transition as shown in the ASME Code Section III, Figure NE 3361-1, and full penetration butt weld connections, are considered to be structures which are integral and continuous, and the rules of the ASME Code Section III, Paragraph NE-3131(c) (2) are applied.

3.8.6.5.4.1 Electromagnetic Conditions. Each penetration assembly is designed to meet continuous, short time overload, and fault current conditions (see Reference 3.8-15). The penetration assemblies meet the requirements of IPCEA Standard P32-382.

a. Low voltage control and indication penetration (Nos. X-101 Series, X-102 Series, and X-105 Series): the low voltage control and indication penetration assemblies are designed for the following electromagnetic conditions:

   1. Maximum momentary short-circuit current: 60 x rated amp RMS asym for 0.25 sec, and

   2. Cable and continuous ampacity as tabulated in Reference 3.8-15.

b. Low voltage power penetration (No. X-104 Series in Reference 3.8-15) and low voltage power control and indication penetration (No. X-107 Series in Reference 3.8-15): These two types of penetration assemblies are designed for the following electromagnetic conditions without damaging conductor and insulation:

   1. Maximum short-circuit current: 60 x rated RMS asym for 0.20 sec,
   2. Maximum starting current: 6.5 x rated amp for 15 sec, and
   3. Continuous ampacity as tabulated in Reference 3.8-15.

c. Medium voltage power penetration (No. X-103 Series in Reference 3.8-15): The medium voltage power penetration assemblies are designed for the following electromagnetic conditions without damaging conductor and insulation:

   1. Maximum continuous current: 700 amps,

   2. Maximum inrush current: 4000 amps/phase for 20 sec,

   3. Maximum short-circuits: 66,000 amps asym momentary and 44,000 amp sym. for 75 cycles.

3.8.6.6 Materials, Quality Control, and Special Construction Techniques

3.8.6.6.1 Materials

Materials used comply with the requirements of NE-2000 of Subsection NE of the ASME Code Section III.

Materials used in piping, electrical and instrumentation penetration assemblies are included in Section 3.8.2.6.1. In addition to materials in Section 3.8.2.6.1, the following materials are used in electrical penetration:

a. Conductor

Material for conductor is as specified in Reference 3.8-15 and in Section 3.8.6.1.4.1.

b. Cable insulation

Unless otherwise specified in Reference 3.8-15 and in Section 3.8.6.1.4.1, the cable insulation is of nonmetallic, organic materials as qualified by IEEE-317.

c. The inner and outer bulkheads of each penetration assembly portions of the assembly encircling individual single conductor power cables are made of nonferromagnetic material to eliminate hysteresis heating. Soft metals such as copper, brass, and aluminum are not exposed to the containment environment.

3.8.6.6.2 Quality Control

Quality control measures discussed in Section 3.8.2.6.2 apply to penetration assemblies. The measures include the vessel vendor's submitted shop and field quality compliance and quality assurance organization and procedures, material certifications, weld data, test data, and welding and testing procedures.

The quality control procedures are in accordance with the ASME Code Section III, Appendix X; IEEE-317; and Regulatory Guide 1.63, Revision 0. In summary, steel quality control begins with the selection of basic shapes and with ranges of properties and characteristics defined by industry standards. Quality control extends from testing of specimens sampled from basic shapes to fabrication, installation and joining procedures.

Nondestructive testing for penetration assemblies is in accordance with the ASME Code Section III for the applicable code class, and in accordance with supplemental requirements specified in the plant specifications.

Nondestructive testing requirements include the following:

a. 100% radiography of all welds;

b. Any weld not radiographed because of restricting geometry receive a 100% magnetic particle or liquid penetrant inspection for both root and final surface. If the weld falls into the ASME Code Section III, Category A or B, ultrasonic testing is performed; and

c. Flued head forgings are examined in the finished condition on all accessible surfaces by either the liquid penetrant or the magnetic particle methods.

3.8.6.6.3 Special Construction Techniques

No construction techniques unusual to erection methods used during the original construction were required for the penetration assemblies.

3.8.6.7 Testing and Inservice Inspection Requirements

3.8.6.7.1 Inspection of Material and Parts for Fabrication

The discussion in Section 3.8.2.7.1 applies to penetration assemblies.

3.8.6.7.2 Shop Hydrostatic Testing

Shop hydrostatic tests discussed in Section 3.8.2.7.4 apply to penetration assemblies.

3.8.6.7.3 Shop Tests on Electrical Penetration Assemblies

The following shop tests were performed on the original electrical penetrations in accordance with applicable standards:

[NOTE: If replacement of the electrical modules is required, the version of IEEE 317 that is in effect at the time of purchase and documented in the design specification is used.]

a. Flame resistant tests

All wires successfully pass the "Flame Resistant Test" specified in IPCEA publication No. S-61-402, whether or not other applicable IPCEA Standards require this test.

b. Fire resistance

The electrical penetration assembly meets the requirements of ASTM D635, Test for Flammability of Self-Supporting Plastics, as well as Underwriters Standards (UL).

c. Prototype tests

Qualification tests performed on at least one prototype electrical penetration assembly of each type, namely, low voltage penetration Nos. X-101 Series, X-102 Series, X-105 Series, X-104 Series, and X-107 Series; and medium voltage penetration No. X-100 Series, as specified in IEEE Standard 317, Paragraph 5, demonstrate the suitability of the penetrations, assemblies, design and all materials selected for use with the assemblies.

d. Production test

Prior to shipment, production tests are performed on each penetration assembly as specified in IEEE Standard 317, Paragraph 6.

e. Containment environmental tests

1. Testing to qualify for normal operation

Temperature and moisture resistance: Evidence of qualification for normal operation (see Table 3.8-13) is provided by certified data which demonstrates that cable has been manufactured, tested, and has successfully passed the requirements contained in the applicable IPCEA standards, with regard to the application of derating factors for the ambient temperatures specified.

Thermal and radiation aging: The following test sequence demonstrates that the cable is operational after exposure to the combined effect of thermal and radiation aging (Table 3.8-8):

Test Step #1: Conditioning

The cable under test is conditioned in a circulating air oven for 7 days at 150°C.

Test Step #2

Heat aged samples are exposed to gamma radiation from a nuclear source such as Cobalt 60 to a dosage of 1 x 10^8 rads.

Test Step #3

The samples are subjected to a combined mechanical/electrical proof test consisting of bending around a mandrel maintained at room temperature in accordance with the procedure designated in paragraph 6.19.3 of IPCEA S-19-81, and the cable is subsequently subjected to an AC voltage withstand test equal to 80% of the final factory test voltage called out in the applicable IPCEA standard.

2. *Testing to qualify for operation during the postulated design basis LOCA.*

Test Step #1

A new set of samples is subjected to heat aging as specified in Section 3.8.6.7.3(e) under thermal and radiation aging.

Test Step #2

Test samples are subjected to a radiation dosage of 1 x 10^8 rads.

Test Step #3

Test samples are subjected to environmental conditions as encountered in a LOCA.

The conditioned samples are placed in a pressure vessel so constructed that cables can be operated under rated voltage and load while exposed to the pressure, temperature, and humidity specified in Table 3.8-13.

After conditioned samples are installed inside the pressure vessel, they are energized at rated voltage and loaded with current to the level specified herein. Then the samples are exposed to the environmental extremes specified in Table 3.8-13 and function properly throughout this exposure to environmental extremes.

3. Sampling

The samples tested contain the conductor, insulation, fillers, jacket, binder tape, overall jacket, shielding, which are representative of the cable category being qualified. Table 3.8-8 lists sizes which are considered representative of the categories of cable supplied for electrical penetration assemblies. The sample lengths are sufficient to permit reliable test readings and evaluation consistent with accepted testing practice.

3.8.6.7.4 Field Tests on Electrical Penetration Assemblies

a. Field tests

Field tests made on electrical penetrations in accordance with IEEE 336 demonstrate that the material and equipment meets the specified performance.

b. After installation

All electrical penetration assemblies are installed as an integral part of the primary containment system and meet the requirements of IEEE 317, Paragraph 7.

3.8.6.7.5 Testing of Penetrations After Erected

On completion of field erection of the primary containment vessel and prior to installation of penetration internals, tests of penetrations were performed according to an established test plan discussed in Sections 3.8.2.7.3 and 3.8.2.7.4.

3.8.6.7.6 Tests on Penetration Field Welds

Leaktightness tests of field welds connecting the penetrations to the primary containment vessel, including the welds connecting the penetration nozzle to the vessel shell, are conducted as discussed in Section 3.8.2.7.6.

3.8.6.7.7 Preoperational Leakage Rate Tests and Periodic Leakage Rate Tests

A discussion of the preoperational and periodic leakage rate tests of the primary containment vessel penetrations is provided in Sections 3.8.2.7.7 and 6.2.6.

3.8.7 REFERENCES

3.8-1 ASCE Task Committee Report, Wind Forces on Structures, Paper No. 3269, Vol. 126, 1961.

3.8-2 Lockheed Aircraft Corp. and Holmes and Narver, Inc., Nuclear Reactors and Earthquakes, Div. of Reactor Development of Atomic Energy Commission, ID-70424, Washington, D.C., August 1963, Chapter 6 and Appendix F.

3.8-3 Harris, Suer, Skene and Benjamin, "The Stability of Thin-Walled, Unstiffened, Circular Cylinders Under Axial Compression Including the Effects of Internal Pressure," Journal of the Aeronautical Sciences, August, 1957.

3.8-4 Wichman, K. R., Hopper, A. G., and Mershon, J. L., "Local Stresses In Spherical and Cylindrical Shells Due to External Loadings. Welding Research Council," Bulletin No. 107, New York, NY, August 1965.

3.8-5 "Sacrificial Shield Wall," Burns and Roe, Inc., Hempstead, New York, Report No. WPPSS-74-2-R2, March 1974.

3.8-6 "Sacrificial Shield Wall Design Supplemental Information," Burns and Roe, Inc., Hempstead, New York, Report No. WPPSS-74-2-R2-A, February 1975.

3.8-7 "Sacrificial Shield Wall Design Supplemental Information," Burns and Roe, Inc., Hempstead, New York, Report No. WPPSS-74-2-R2-B, August 1975.

3.8-8 "Drywell to Wetwell Leakage Study," Burns and Roe, Inc., Hempstead, New York, Report No. WPPSS-74-2-R5, July 1974.

3.8-9 "Drywell to Wetwell Leakage Study Additional Information," Burns and Roe, Inc., Hempstead, New York, Report No. WPPSS-74-2-R5-A, February 1975.

3.8-10 ACI 318-1971, "Building Code Requirements for Reinforced Concrete," American Concrete Institute, 1971.

3.8-11 AISC, "Specification for Design, Fabrication and Erection of Structural Steel for Buildings," American Institute of Steel Constriction, 1969.

3.8-12 ANSI N45.2.5, "Supplementary Quality Assurance Requirements for Installation, Inspection and Testing of Structural Concrete and Structural Steel During the Construction Phase of Nuclear Power Plants," Draft 3, Revision 1, American National Standards Institute, January 1974.

3.8-13 Letter GI2-75-10, from W. R. Butler to J. J. Stein, Transmitting Request for Additional Information, dated January 14, 1975, on Drywell to Wetwell Leakage Study, Docket 50-397.

3.8-14 Letter GO2-76-156, from D. L. Renberger to W. R. Butler, entitled WPPSS Nuclear 2 Project No. 2, Drywell/Wetwell Leakage Study, transmitting response to request for additional information in Reference 3.8-13, dated April 23, 1976.

3.8-15 Supply System Analysis Report, "Overcurrent Protection of Primary Containment Electrical Penetrations," E/I-02-93-04 and Drawing E539.

3.8-16 Savin, G. N., Stress Distribution Around Holes, Translation of "Raspredeleniye Napryazheniy Okolo Otverstiy," Naukova Dumka Press, 1968, National Aeronautics and Space Administration, NASA TT F-607, Washington, D.C., November 1970.

3.8-17 Roark, R. J., Formulas for Stress and Strain, Fourth Edition, McGraw-Hill Book Company, Inc., New York, 1965.

3.8-18 Abbett, R. W., American Civil Engineering Practice, John Wiley and Sons, Inc., New York, 1956.

3.8-19 Shannon and Wilson, Inc., Soil Compaction Evaluation of Quality Class I Backfill, Washington Public Power Supply System, WPPSS Nuclear Project No. 2 (WNP-2).

3.8-20 Shannon and Wilson, Inc., Supplementary Soils Investigation, Washington Public Power Supply System, Hanford No. 2 Nuclear Power Plant, Central Plant Facilities, Benton County, Washington, July 28, 1972.

3.8-21 "Primary Containment Vessel for Washington Public Power Supply System, Hanford No. 2, Jet Impingement Analysis," FIRL Technical Report F-C14121, May 21, 1975.

3.8-22 "HYBOS," FIRL Users Manual, July 1973.

3.8-23 Engineering Evaluation of the Sacrificial Shield Wall, submitted to the NRC with WPPSS letter G02-80-172, August 8, 1980.

3.8-24 Engineering Evaluation of the Sacrificial Shield Wall, Supplement No. 1, submitted to NRC with WPPSS letter GO2-80-182, August 19, 1980.

Table 3.8-1

Primary Containment
Drywell and Pressure Suppression Chamber
Principal Design

Parameters	Characteristics
Pressure suppression chamber	
Internal design pressure	45 psig
External design pressure (due to negative internal pressure)	2.0 psig
Drywell	
Internal design pressure	45 psig
External design pressure (due to negative internal pressure)	2.0 psig
Drywell free volume, including downcomer vent pipes	200,540 ft^3 (maximum)
Pressure suppression chamber free volume	144,184 ft^3 (maximum)
Pressure suppression pool water volume	112,197 ft^3 (minimum)[a]
Submergence of downcomer vent pipe below pressure suppression pool surface	11.67 ft (minimum) 12.0 ft (maximum)
Design temperature of drywell	340°F
Design temperature of pressure suppression chamber	275°F
Downcomer vent pipe pressure loss factor	2.77
Total downcomer vent pipe area	309 ft^2
Break area/total downcomer vent pipe area	0.0105
Calculated maximum pressure after blowdown (no prepurge):	
Drywell	37.4[b] psig
Pressure suppression chamber	30.5[b] psig
Number of downcomer vent pipes	99
Minimum spacing of downcomer vent pipes	4 ft 3 in.

Table 3.8-1

Primary Containment
Drywell and Pressure Suppression Chamber
Principal Design (Continued)

Parameters	Characteristics
Normal operating temperature - suppression chamber pool	90°F (maximum)[c]
Normal operating temperature - suppression chamber air space	95°F[c] (150°F maximum)[d]
Normal operating temperature - drywell	135°F (150°F locally)
Normal operating pressure - drywell and suppression chamber	0 psig to 2 psig

[a] The value for the pool water volume does not include the water within the reactor pedestal (10,065 ft^3) and the 12 ft of water below the downcomer vent pipe exits (15,000 ft^3).

[b] Based on an initial containment pressure of 2.0 psig. The value of P_a to be used for 10 CFR 50 Appendix J testing was conservatively chosen to be 38 psig.

[c] Average or bulk temperature.

[d] Average of two thermocouples located near ceiling.

Table 3.8-2

Containment
Environmental Design Conditions

Parameter	Inside Primary Containment Drywell	Outside Primary Containment
Normal operating environment (capable of continuous operation)		
Temperature	135°F to 150°F	40°F to 104°F
Pressure	2 psig	-0.012 psig to +0.25 psig
Relative humidity	40% to 100%	20% to 90%
Maximum emergency environment (equipment is capable of maintaining containment integrity for not less than 2 hr)		
Temperature	340°F	
Pressure	45 psig	
Relative humidity	100%	

Table 3.8-3

Primary Containment
Pressure Suppression System
Maximum Accident Pressure Comparison

	Pressure (psig)	
	Design	Calculated
Drywell	45	37.4[a]
Pressure suppression chamber	45	30.5[a]
Differential pressure on drywell floor, downward	25	21.5

[a] The value of P_a to be used for 10 CFR 50 Appendix J testing was conservatively chosen to be 38 psig.

Table 3.8-4

List of Applicable Codes, Standards, Specifications, and Regulatory Guides

Reference Number	Designation	Title	Edition
1A	ACI 318-71	Building Code Requirements for Reinforced Concrete	February 9, 1971
1B	ACI 318-63	Building Code Requirements for Reinforced Concrete	June 1983
2A	ACI 301-72	Specifications for Structural Concrete for Buildings	May 1972
2B	ACI 301-66	Specifications for Structural Concrete for Buildings	1966
3	ACI 347-68	Recommended Practice for Concrete Formwork	March 1968
4	ACI 605-72	Recommended Practice for Hot Weather Concreting	1972
5A	ACI 211.1-70	Recommended Practice for Selecting Proportions for Normal Weight Concrete	1970
5B	ACI 211.1-74	Recommended Practice for Selecting Proportions for Normal Weight Concrete	1974
6	ACI 614-73	Recommended Practice for Measuring, Mixing, Transporting, and Placing Concrete	1971
7	ACI 315-74	Manual of Standard Practice for Detailing Reinforced Concrete Structures	1971
8	ACI 306-66	Recommended Practice for Cold Weather Concreting	1966

Table 3.8-4

List of Applicable Codes, Standards, Specifications, and Regulatory Guides (Continued)

Reference Number	Designation	Title	Edition
9	ACI 609-72	Recommended Practice for Consolidation of Concrete	March 1972
10	ACI 322-72	Building Code Requirements for Structural Plain Concrete	1972
11	ACI 308-71	Recommended Practice for Curing Concrete	1971, Title 69-1
12	ACI 212	Guide for Use of Admixtures in Concrete	ACI Journal, September 1971, Title 68-56
13	ACI 214-65	Recommended Practice for Evaluation of Compression Test Results of Field Concrete	1965
14	ACI 311-64	Recommended Practice for Concrete Inspection	1964
15	ACI SP-2	Manual of Concrete Inspection	1968 (5th Edition)
16	Report by ACI Committee 304	Placing Concrete by Pumping Methods	ACI Journal, May 1971, Title 68-33
17	Report by ACI Committee 437, Subcommittee 1	Strength Evaluation of Existing Concrete Structures	ACI Journal, November 1967, Title 64-61
18	AISC-69	Specification for the Design, Fabrication, and Erection of Structural Steel for Buildings	February 12, 1969
19	AISC-68	Specification for the Design of Light Gauge Cold-Formed Steel Structural Members	1968

Table 3.8-4

List of Applicable Codes, Standards, Specifications, and Regulatory Guides (Continued)

Reference Number	Designation	Title	Edition
20	AWS D1.1-72	Structural Welding Code	1972
21	AWS D12.1-61	Recommended Practice for Welding Reinforcing Steel, Metal Inserts, and Connection in Reinforced Concrete Construction	1961
25	ASTM	Annual Books of ASTM Standards	1972
26	ANSI B31.1.0	Standard Code for Pressure Piping, Power Piping	Latest edition
27	API Spec. No. 620	Specification for Welded Steel Storage Tanks	February 1970
28	UBC	Uniform Building Code	1970
29	NEC	National Electric Code	Latest edition
30	ASTM C 1107	Standard Specification for Packaged Dry, Hydraulic-Cement Grout (Nonshrink)	Latest edition
31	ASTM C 1090	Standard Test Method for Measuring Changes in Height of Cylindrical Specimens of Hydraulic-Cement Grout	Latest edition
32	CRSI	Manual of Standard Practice	1972
33	ANSI 45.2.5-74	Supplementary Quality Assurance Requirements for Installations, Inspection, and Testing of Structural Concrete and Structural Steel During the Construction Phase of Nuclear Power Plants	1974

Table 3.8-4

List of Applicable Codes, Standards, Specifications, and Regulatory Guides (Continued)

Reference Number	Designation	Title	Edition
34	---------	Steiger Occupational Safety and Health Act	Latest edition
35	Regulatory Guide 1.10	Mechanical Cadweld Splices in Reinforcing Bars of Category I Concrete Structures (Revision 1)	January 2, 1973
36	Regulatory Guide 1.12	Instrumentation for Earthquakes (Revision 2)	March 1997
37	Regulatory Guide 1.13	Fuel Storage Facility Design Basis	March 10, 1971
38	Regulatory Guide 1.15	Testing of Reinforcing Bars for Category I Concrete Structures (Revision 1)	December 28, 1972
40	Regulatory Guide 1.26	Quality Group Classification and Standards (Revision 3)	September 1974
41	Regulatory Guide 1.27	Ultimate Heat Sink for Nuclear Power Plants (Revision 1)	March 1974
42	Regulatory Guide 1.29	Seismic Design Classification (Revision 3)	September 1978
43	Regulatory Guide 1.31	Control of Stainless Steel Welding (Revision 1)	June 1973
44	Not Used		
45	Regulatory Guide 1.55	Concrete Placement in Category I Structures (Revision 0)	June 1973
46	ASME	1971 Boiler and Pressure Vessel Code, Section XI	Summer of 1972 Addenda

Table 3.8-4

List of Applicable Codes, Standards, Specifications, and Regulatory Guides (Continued)

Reference Number	Designation	Title	Edition
47	ASME	1971 ASME Boiler and Pressure Vessel Code, Section VIII	Summer of 1972 Addenda
48	ASME	1971 Code Interpretations Case Number 1177-7	
49	EJMA	Standards of the EJMA	Latest editions
50	SSPC	Painting Specifications	Latest editions
51	ANSI N 101.4	Protective Coating Applied to Nuclear Facilities, Quality Assurance	Latest edition
52	10 CFR Part 50, Appendix A	General Design Criterion 2, "Design Bases for Protection Against Material Phenomena"	July 15, 1971
53	10 CFR Part 50, Appendix A	General Design Criterion 4, "Environmental and Missile Design Basis"	July 15, 1971
54	Regulatory Guide 1.94	Quality Assurance Requirements for Installation; Inspection and Testing of Structural Concrete and Structural Steel During the Construction Phase of Nuclear Power Plants (Revision 1)	April 1976
55	Regulatory Guide 1.166	Pre-Earthquake Planning and Immediate Nuclear Power Plant Operator Postearthquake Actions	March 1997
56	Regulatory Guide 1.167	Restart of a Nuclear Power Plant Shut Down by a Seismic Event	March 1997

Table 3.8-4

List of Applicable Codes, Standards, Specifications, and Regulatory Guides (Continued)

Legend:

ACI	American Concrete Institute
AISC	American Institute of Steel Construction
AISI	American Iron and Steel Institute
ANSI	American National Standards Institute
API	American Petroleum Institute
ASME	American Society of Mechanical Engineers
ASTM	American Society for Testing and Materials
AWS	American Welding Society
CRSI	Concrete Reinforcing Steel Institute
NEC	National Electric Code
UBC	Uniform Building Code
EJMA	Expansion Joint Manufacturers Association
SSPC	Steel Structure Painting Council

NOTE: All of the previously referenced codes and standards may not appear as direct references in the construction specifications. However, they were used by the architect-engineer either in preparing the specification or in design.

Table 3.8-5

Load Combinations and Load Factors
Concrete Internal Structures of Steel Containment

Category ACI 318-71 Strength Design Method	Load	Normal					Severe Environment	Abnormal				Extreme Environment
		D	L	R_o	T_o	P_o	E	P_a	T_a	R_a	R_r	E′
Service load conditions												
Normal	1	1.4	1.7			1.7						
	1b	1.4	1.7	1.4	1.4	1.7						
Severe environmental	2	1.4	1.7			1.7	1.9					
	2b	1.4	1.4	1.4	1.4	1.4	1.4					
Factored load conditions[a,b]												
Extreme environmental	3	1.0	1.0	1.0	1.0	1.0						1.0
Abnormal[c]	4	--	--			--		--	--	--		
Abnormal/severe environmental[d]	5	--	--			--	--	--	--	--	--	
Abnormal/extreme environmental	6	1.0	1.0		1.0	1.0		1.0	1.0	1.0	1.0	1.0

[a] In combination 6, the maximum values of P_a, T_a, R_a, Y_j, Y_r, and Y_m, including an appropriate dynamic load factor, are used unless a time-history analysis is performed to justify otherwise (R_r includes Y_j, Y_r, and Y_m.)

[b] When considering Y_j, Y_r, and Y_m, local section strength capacities may be exceeded under these concentrated loads provided there is no loss of function of any safety-related system.

Table 3.8-5

Load Combinations and Load Factors
Concrete Internal Structures of Steel Containment (Continued)

[c] In abnormal load category, DBA is not considered alone. DBA is considered with E′ as in load combination 6.

[d] In abnormal/severe environmental load category, DBA with E is not considered. DBA is considered with E′ as in load combination 6.

NOTE:

All of the loads listed are not necessarily applicable to all concrete structures in containment. Loads not applicable to a particular structure are deleted. If for any combination, the effect of any load other than D reduces the stress it is deleted from the combination. Combination numbers correspond to those in NUREG-0800, Standard Review Plan for Section 3.8.3. Dashed lines indicate that the load combination is not used. For load definitions, see Section 3.8.3.3.

Table 3.8-6

Load Combinations and Load Factors
Steel Internal Structures of Steel Containment

Load Category	Load	Normal				Severe Environment		Abnormal				Extreme Environment
		D	L	Ro	To	Po	E	Pa	Ta	Ra	Rr	E′
Elastic Working Stress Design Method												
Service load conditions												
Normal	1	1.0	1.0			1.0						
	1a	1.0	1.0	1.0	1.0	1.0						
Severe environmental	2	1.0	--			1.0	1.0					
	2a	1.0	--	1.0	1.0	1.0	1.0					
Factored load conditions[a-c]												
Extreme environmental[d]	3	--	--	--	--	--						--
Abnormal[e]	4	--	--			--		--	--	--		
Abnormal/severe environmental[f]	5	--	--			--	--	--	--	--	--	
Abnormal/extreme environmental	6	1.0	--			1.0		1.0	1.0	1.0	1.0	1.0
Plastic Design Method												
Service load conditions												
Normal	1	1.0	1.0			1.0						
	1b	1.0	1.0	1.0	1.0	1.0						
Severe environmental	2	1.0	--			1.0	1.0					
	2b	1.0	--	1.0	1.0	1.0	1.0					
Factored load conditions[a-c]												
Extreme environmental[d]	3	--	--	--	--	--						--
Abnormal[e]	4	--	--			--		--	--	--		
Abnormal/severe environmental[f]	5	--	--			--		--	--	--	--	
Abnormal/extreme environmental	6	1.0	--			1.0		1.0	1.0	1.0	1.0	1.0

Table 3.8-6

Load Combinations and Load Factors
Steel Internal Structures of Steel Containment (Continued)

[a] In combination 6, the maximum values of P_a, T_a, R_a, Y_j, Y_r, and Y_m, including an appropriate dynamic load factor, are used unless a time-history analysis performed to justify otherwise (R_r includes Y_j, Y_r, and Y_m).

[b] When considering Y_j, Y_r, and Y_m, local section strength capacities may be exceeded under these concentrated loads provided there will be no loss of function of any safety-related system.

[c] Thermal loads for factored load conditions are neglected when it can be shown that they are secondary and self-limiting in nature.

[d] Extreme environmental E′ is considered with DBA as in load combination 6.

[e] Abnormal: DBA not considered alone. DBA is considered with E′ as in load combination 6.

[f] Abnormal/severe environmental: DBA with E not considered. DBA is considered with E′ as in load combination 6.

NOTE:

The drywell floor support steel is considered a steel internal structure in the suppression chamber. All the loads listed are not necessarily applicable to all steel structures. Loads not applicable to a particular structure are deleted. If, for any load combination, the effect of any load other than D reduces the stress, it is deleted from the combination. Combination numbers correspond to those in NUREG-0800, Standard Review Plan, for Section 3.8.3. Dashed lines indicate that the load or load combination is not used. For load definitions, see Section 3.8.3.3.

Table 3.8-7

Section Strength Limits and Section Modulus
for Structural Steel Internal Structures
of Steel Containment

Load Category	Load	Strength Limit[a,b]	Section Modulus of Steel Shapes
Elastic Working Stress Design Method			
Service load conditions			
Normal	1	S	Elastic
	1a	1.5S	Elastic
Severe environmental	2	S	Elastic
	2a	1.5S	Elastic
Factored load conditions			
Extreme environmental	3	1.6S	Elastic
Abnormal	4	1.6S	Elastic
Abnormal/severe environmental	5	1.6S	Plastic[c]
Abnormal/extreme environmental	6	1.7S	Plastic[c]
Plastic Design Method			
Service load conditions			
Normal	1	Y	Plastic
	1b	Y	Plastic
Severe environmental	2	Y	Plastic
	2b	Y	Plastic
Factored load conditions			
Extreme environmental	3	0.9Y	Plastic
Abnormal	4	0.9Y	Plastic
Abnormal/severe environmental	5	0.9Y	Plastic
Abnormal/extreme environmental	6	0.9Y	Plastic

[a] S is the required section strength based on the elastic design methods and the allowable stresses defined in Part 1 of the AISC Specification for the Design, Fabrication, and Erection of Structural Steel for Buildings, February 12, 1969.
[b] Y is the section strength required to resist design loads based on plastic design methods in Part 2 of the AISC Specification for the Design, Fabrication, and Erection of Structural Steel for Buildings, February 12, 1969.
[c] Plastic section modulus may be used.

Table 3.8-8

Radwaste and Control Building
Quality Class and Design Bases Criteria

Location	Materials of Construction[a]	Quality Class	Environmental Disturbances			
			Seismic Category	Design Basis Wind	Design Basis Tornado	Tornado-Generated Missiles
Those portions of the radwaste and control building that house systems or components necessary for safe shutdown of the reactor	Reinforced-concrete	I	I	Yes	Yes	Yes
Those portions of the radwaste building that house equipment containing significant quantities of radioactive material	Reinforced-concrete	I	I	Yes	Yes	Yes
Other portions	Structural steel	II	II	Yes	No[b]	No[b]

[a] See Figure 3.8-42.

[b] "Other portions" denote those portions of the radwaste and control building which are not required to withstand the effects of the design basis tornado and tornado-generated missiles.

Table 3.8-9

Load Combinations and Load Factors
Seismic Category I and Nonseismic Category I Safety-Related
Concrete Structures Outside Primary Metal Containment

		Normal									Severe Environmental					Abnormal					Extreme Environmental		
Load Category ACI 318-71 Strength Design Method	Load	D	L	R_o	T_o	P_o	P_t	T_t	F	Q	E	W	H	F*	Q*	P_a	T_a	R_a	R_r	P′	E′	W′	H′
Service load conditions																							
Construction	U1	1.4																					
	U2	0.9	1.3	0.9	1.3							1.3											
Normal	1	1.4	1.7			1.7																	
	1b	1.4	1.7	1.4	1.4	1.7																	
	U3	1.4	1.7			1.7			1.4	1.7													
	U4	1.4	1.7		1.4	1.7			1.4	1.7													
	U5	0.9							1.4	1.7													
	U6	0.9			1.4				1.4	1.7													
Severe	2	1.4	1.7			1.7					1.9												
	2b	1.4	1.4	1.4	1.4	1.4					1.4												
	2b′	0.9									1.4												
	3	1.1	1.3			1.3						1.3											
	3b	1.1	1.3	1.1	1.1	1.3						1.3											
	3b′	0.9										1.3											
	U7	1.1	1.3			1.3			1.1	1.3		1.3											
	U8	1.1	1.3		1.1	1.3			1.1	1.3		1.3											
	U9	1.4	1.7			1.7					1.9			1.4	1.7								
	U10	1.4	1.4		1.4	1.4					1.4			1.4	1.4								
Factored load conditions[a, b]																							
Extreme environmental	4	1.0	1.0	1.0	1.0																1.0		
	5	--	--	--	--																	--	
Abnormal	6	1.0	1.0													1.5	1.0	1.0					
Abnormal/severe environmental	7	1.0	1.0								1.25					1.25	1.0	1.0	1.0				
Abnormal/extreme environmental	8	1.0	1.0													1.0	1.0	1.0	1.0		1.0		
	U11	1.0	1.0	1.0	1.0															1.0	1.0		
		1.0	1.0	1.0	1.0															1.0		1.0	

Table 3.8-9

Load Combinations And Load Factors
Seismic Category I and Nonseismic Category I Safety-Related
Concrete Structures Outside Primary Metal Containment (Continued)

[a] In combinations 6, 7, and 8, the maximum values of P_a, T_a, R_a, Y_r, and Y_j, including an appropriate dynamic load factor, are used. The value of Y_m is arrived at by an energy balance method of structural action (Section 3.6.1.6.3.2), to account for the dynamic nature of the load.

In combinations 7 and 8, local stresses due to concentrated load Y_r, Y_j, and Y_m may be permitted to exceed the allowable stresses, provided there is no loss of function of any safety-related system as a result thereof.

[b] In considering the concentrated tornado missile load in combination U11, local section strength capacities may be exceeded under these concentrated loads provided there is no loss of function of any safety-related system as a result thereof.

NOTES:

All the loads listed are not necessarily applicable to all concrete structures. Loads not applicable to a particular structure are deleted. If, for any combination, the effect of any load other than dead loads reduces the stress it is deleted from the combination. Combinations 1 through 8, 1b, 2b, 2b′, 3b, and 3b′ correspond to those in NUREG-0800, Standard Review Plan for Section 3.8.4. Combinations U1 through U11 are not in the review plan for Section 3.8.4 and are used in addition to those of the review plan combinations. Dashed lines indicate that the load or load combination is not used. For load definitions, see Section 3.8.4.3. Combinations 6, 7, and 8 are used only when abnormal loads generated by a postulated pipe break are included.

Table 3.8-10

Load Combinations and Load Factors
Seismic Category I and Nonseismic Category I Safety-Related
Steel Structures Outside Primary Metal Containment

		Normal				Severe Environmental			Abnormal					Extreme Environmental	
Load Category	Load	D	L	R_o	T_o	P_o	E	W	P_a	T_a	R_a	R_r	P′	E′	W′
Elastic Working Stress Design Method															
Service Load Conditions															
Normal	1	1.0	1.0			1.0									
	1a	---	---	---	---										
Severe environmental	2	1.0	---			1.0	1.0								
	2a	---	---	---	---		---								
	3	1.0	---			1.0		1.0							
	3a	---	---	---	---			---							
Factored Load Conditions															
Extreme environmental	4	---	---	---	---									---	
	5	---	---	---	---										---
Abnormal	6	---	---						---	---	---				
	U12	1.0	1.0										1.0		
Abnormal/severe environmental	7	---	---				---		---	---	---	---			
Abnormal/extreme environmental	8	---	---						---	---	---	---		---	
	U13	1.0											1.0	1.0	
	U14	1.0											1.0		1.0

Table 3.8-10

Load Combinations and Load Factors
Seismic Category I and Nonseismic Category I Safety-Related
Steel Structures Outside Primary Metal Containment (Continued)

		Normal				Severe Environmental			Abnormal					Extreme Environmental	
Load Category	Load	D	L	R_o	T_o	P_o	E	W	P_a	T_a	R_a	R_r	P′	E′	W′
Plastic Design Method															
Service load conditions															
Normal	1	1.0	1.0			1.0									
	1b	---	---	---	---										
Severe environmental	2	1.0	---			1.0	1.0								
	2b	---	---	---	---		---								
	3	1.0	---			1.0		1.0							
	3b	---	---	---	---			---							
Factored load conditions															
Extreme environmental	4	---	---	---	---									---	
	5	---	---	---	---										---
Abnormal	6	1.0	1.0						1.5	1.0	1.0				
	U12	1.0	1.0										1.0		
Abnormal/severe environmental	7	1.0	1.0				1.25		1.25	1.0	1.0	1.0			
Abnormal/extreme environmental	8	1.0	1.0						1.0	1.0	1.0	1.0		1.0	
	U13	1.0											1.0	1.0	
	U14	1.0											1.0		1.0

Table 3.8-10

Load Combinations and Load Factors
Seismic Category I and Nonseismic Category I Safety-Related
Steel Structures Outside Primary Metal Containment (Continued)

Notes:

1. In combinations 6, 7, and 8, (factored load conditions, Plastic Design Method), the maximum values of P_a, T_a, R_a, Y_j, and Y_r, including an appropriate dynamic load factor, are used; and the value of Y_m is arrived at by an energy balance method of structural action (Section 3.6.1.6.3.2), to account for the dynamic nature of the load.

   In combinations 7 and 8, (factored load conditions, Plastic Design Method), local stresses due to concentrated loads Y_r, Y_j, and Y_m may be permitted to exceed the allowable stresses, provided there is no loss of function of any safety-related system as a result thereof.

   In considering the concentrated tornado missile load in combination U14, local section strength capacities may be exceeded under these concentrated loads provided there is no loss of function of any safety-related system as a result thereof.

2. Thermal loads for factored load conditions are neglected when it can be shown that they are secondary and self-limiting in nature.

3. All the loads listed are not necessarily applicable to all concrete structures. Loads not applicable to a particular structure are deleted.

4. If, for any load combination, the effect of any load other than D reduces the stress, it is deleted from the combination.

5. Combinations 1 through 8, 1a, 2a, 3a, 1b, 2b, and 3b correspond to those in the NRC Standard Review Plan for Section 3.8.4. Combinations U12, U13, and U14 are not in the review plan for Section 3.8.4, and are used in addition to those of the review plan combinations.

6. Dashed lines indicate that the load or load combination is not used.

7. For load definitions, see Section 3.8.4.3.

8. This table applies to Section 3.8.4.

9. Combinations 6, 7, and 8 in the Plastic Design Method are used only when abnormal loads generated by a postulated pipe break are included.

Table 3.8-11

Seismic Category I and Nonseismic
Safety-Related Steel Structures
Outside Primary Metal Containment

Load Category	Load	Strength Limit[a, b]	Section Modulus of Steel Shapes
Elastic Working Stress Design Method			
Service load conditions			
Normal	1	S	Elastic
	1a	1.5S	Elastic
Severe environmental	2	S	Elastic
	2a	1.5S	Elastic
	3	S	Elastic
	3a	1.5S	Elastic
Factored load conditions			
Extreme environmental	4	1.6S	Elastic
	5	1.6S	Elastic
Abnormal	6	1.6S	Elastic
	U12	1.6S	Elastic
Abnormal/severe environmental	7	1.6S	Plastic[c]
Abnormal/extreme environmental	8	1.7S	Plastic[c]
	U13	1.7S	Elastic
	U14	1.7S	Elastic
Plastic Design Method			
Service load conditions			
Normal	1	Y	Plastic
	1b	Y	Plastic
Severe environmental	2	Y	Plastic
	2b	Y	Plastic
	3	Y	Plastic
	3b	Y	Plastic
Factored load conditions			
Extreme environmental	4	0.9Y	Plastic
	5	0.9Y	Plastic
Abnormal	6	0.9Y	Plastic
	U12	0.9Y	Plastic

Table 3.8-11

Seismic Category I and Nonseismic
Safety-Related Steel Structures
Outside Primary Metal Containment (Continued)

Load Category	Load	Strength Limit[a, b]	Section Modulus of Steel Shapes
Abnormal/severe environmental	7	0.9Y	Plastic
Abnormal/extreme environmental	8	0.9Y	Plastic
	U13	0.9Y	Plastic
	U14	0.9Y	Plastic

[a] S is the required section strength based on the elastic design methods and the allowable stresses defined in Part 1 of the AISC Specification for the Design, Fabrication, and Erection of Structural Steel for Buildings, February 12, 1969.

[b] Y is the section strength required to resist design loads and based on plastic design methods described in Part 2 of the AISC Specification for the Design, Fabrication, and Erection of Structural Steel for Buildings, February 12, 1969.

[c] Plastic section modulus may be used.

Table 3.8-12

Maximum Permissible Stresses
Seismic Category I and Nonseismic Category I
Safety-Related Reinforced-Concrete Structures

	Concrete			Reinforcing Steel		
		Shear				
Loading Conditions	Flexural and Axial Compression	Flexural	Punching	Flexural Tension	Shear Tension	Axial Compression
Service load and factored load conditions	ϕ (0.85 f′c) Varies from: 0.70(0.85f′c) = 0.60f′c to 0.90(0.85f′c) = 0.76f′c	$2\sqrt{f'c}$	$4\sqrt{f'c}$	$0.9f_y$	$0.85f_y$	Varies from $0.7f_y$ to $0.75f_y$

Notes:

1. Concrete tensile strength is not relied upon.
2. f′c = 4000 psi; η = 8
3. f_y = 40,000 psi for reinforcing steel up to and including #5 bar size.
4. f_y = 60,000 psi for reinforcing steel over #5 bar size.
5. The maximum permissible compression and flexural stress of 0.85f′c corresponds to a limiting strain of 0.003 in./in.
6. The symbol ϕ represents the capacity reduction factor.
7. Normal permissible bearing stresses are as specified in ACI 318-71.
8. This table applies to the Sections 3.8.3, 3.8.4, and 3.8.5.

Table 3.8-13

Primary Containment Vessel Electrical Penetrations
Principal Design Parameters

Environmental Condition[a]	Inside Primary Containment Vessel	Outside Primary Containment Vessel
Normal operating pressure	-0.5 psig to 2 psig	-0.10 in. to -1.0 in. water gauge
Design pressure	-2.0 psig to 45 psig	7 in. water gauge
Test pressure	52 psig	N/A
Normal operating temperature	135°F average 150°F maximum	70°F average 104°F maximum
Design temperature (accident - 6 hr)	340°F	212°F
Design temperature (accident up to 6 months)	250°F	150°F
Relative humidity (normal)	40% to 55% 90% maximum	40%
Relative humidity (LOCA)	100%	100%
Gamma radiation (normal operating)	50.0 rad/hr	N/A
Neutron radiation (normal operating)	1.4×10^5 neutrons/cm^2 sec	N/A
Lowest service metal temperature	30°F	N/A
Integrated dose - gamma (normal condition)	1.8×10^7 rad	N/A
Integrated dose - neutron (normal condition)	1.8×10^{14} neutrons/cm^2	N/A
Integrated dose - gamma (accident conditions)	2.6×10^7 rad	N/A
LOCA dose rate - gamma[b]	1.3×10^6 rad	N/A

[a] Under normal operating and accident conditions, the design parameters are integrated over 40 years.

The application of the Columbia AMPs verifies that the identified structures, systems, and components will continue to provide their identified intended function(s) during the period of extended operation.

[b] LOCA analysis is based on the assumption that 100% of the noble gases, 50% of the halogens, and 1% of the solid fission products are released from the core.

Table 3.8-14

Primary Containment Vessel
Piping Penetrations
Principal Design

Parameters	Characteristics
Pressure suppression chamber	
Internal design pressure	45 psig
External design pressure (due to negative internal pressure)	2.0 psig
Drywell	
Internal design pressure	45 psig
External design pressure (due to negative internal pressure)	2.0 psig
Design temperature of drywell	340°F
Design temperature of pressure suppression chamber	275°F
Normal operating temperature - suppression chamber air space	95°F[a] 150°F (maximum)[b]
Normal operating temperature - drywell	135°F[a]
Normal operating pressure - drywell and suppression chamber	0 psig to 2 psig

[a] Average or bulk temperature.
[b] Average of two thermocouples located near ceiling.

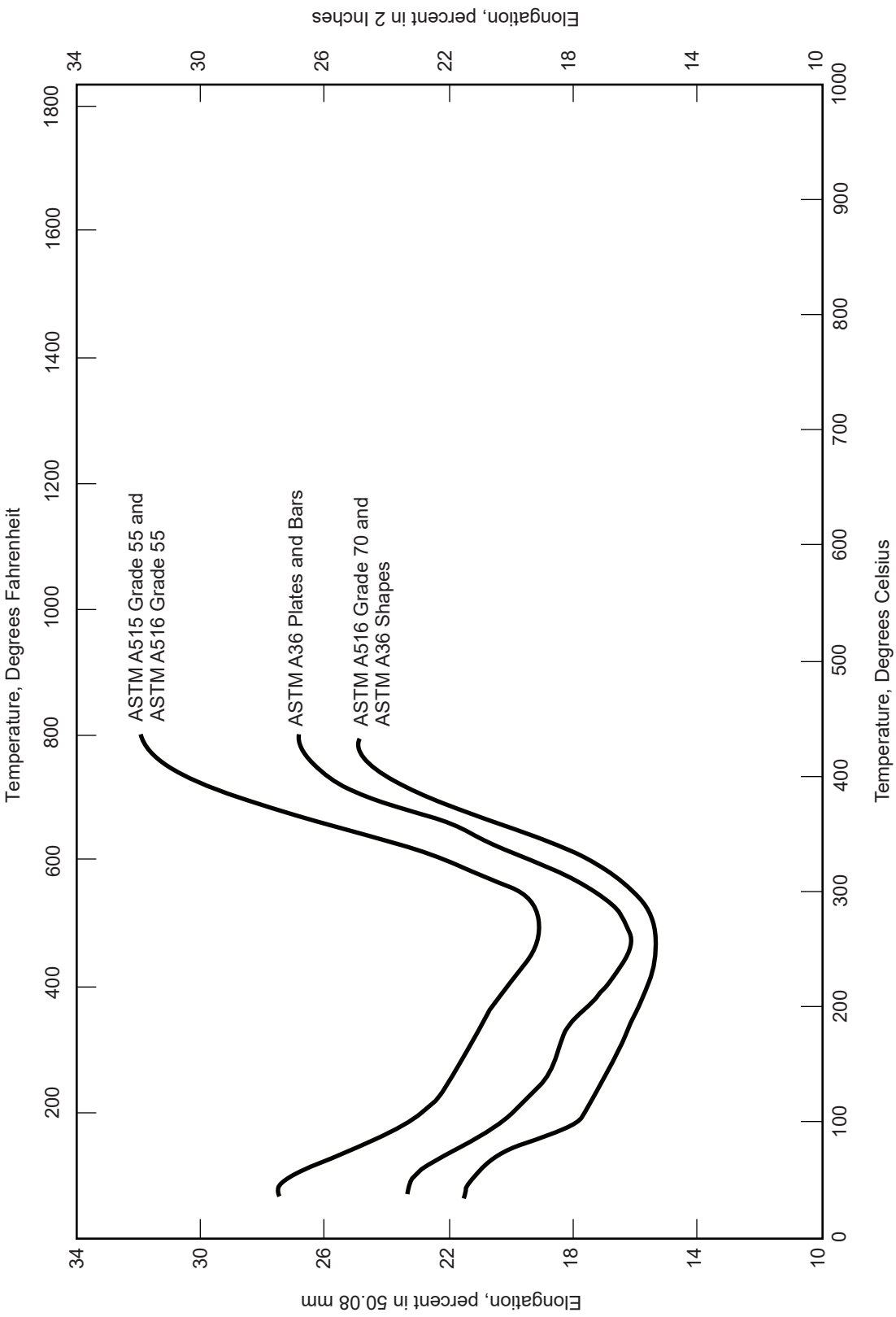

Columbia Generating Station
Final Safety Analysis Report

Minimum Total Elongation Structural Materials, Carbon Steels, Medium Carbon Steels

Draw. No. 990306.71	Rev.	Figure 3.8-5

DELETED

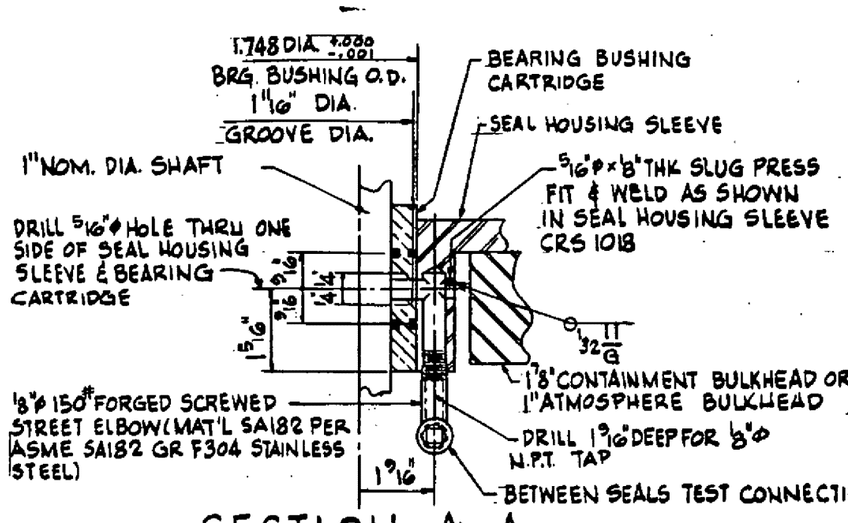

SECTION A-A

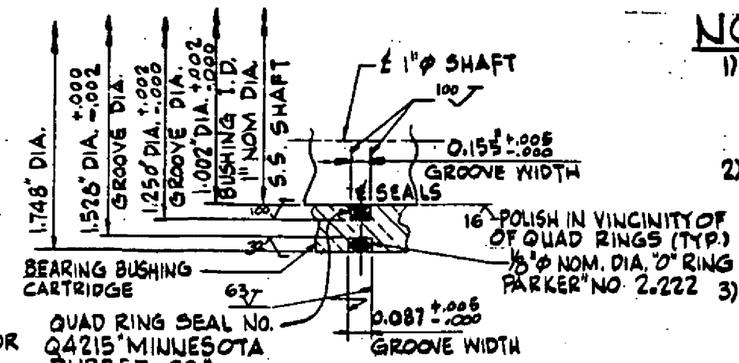

DETAIL "B"

(TYP. 2 PLACES PER BEARING BUSHING CARTRIDGE)

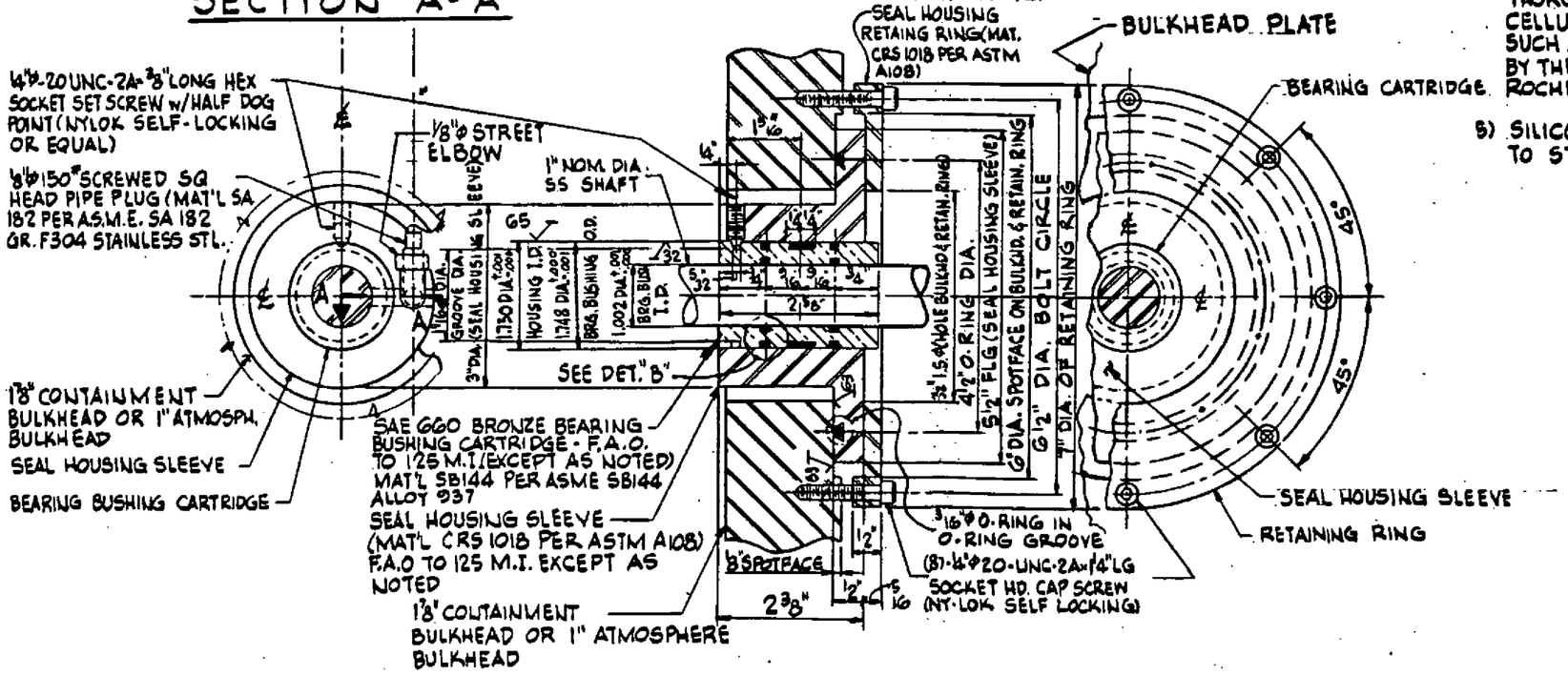

NOTES:

1) SEE FIG. 3.8-15 FOR AN ENLARGED SECTION THRU A BULKHEAD MECHANICAL PENETRATION SEAL.

2) APPLY LOCTITE PIPE SEALANT CAT. NO. 71 TO ALL PIPE THREADS.

3) "O" RING & QUAD RING SEAL MATERIAL: SILICONE TO 70 DUROMETER
"O" RINGS: "PARKER" COMPOUND NO. S604-7 OR EQUAL
QUAD-RING: M.R. COMPOUND NO. 71417

4) QUAD RING SEALS, SHAFT & BEARING BUSHING CARTRIDGE MUST BE THOROUGHLY LUBRICATED WITH A CELLULOSE ESTER & CASTER OIL COMPOUND SUCH AS "CELVACENE" MANUFACTURED BY THE CONSOLIDATED VACUUM CO., ROCHESTER N.Y. OR EQUAL

5) SILICONE RUBBER MATERIAL TO BE TEST TO ST-1

TYPICAL SECTION THRU 1"ϕ SHAFT PENETRATION IN ATMOSPHERE & CONTAINMENT BULKHEAD

Columbia Generating Station Final Safety Analysis Report	Personnel Access Airlock - Typical Bulkhead Mechanical Penetration		
	Draw. No. 020552.10	Rev.	Figure 3.8-14

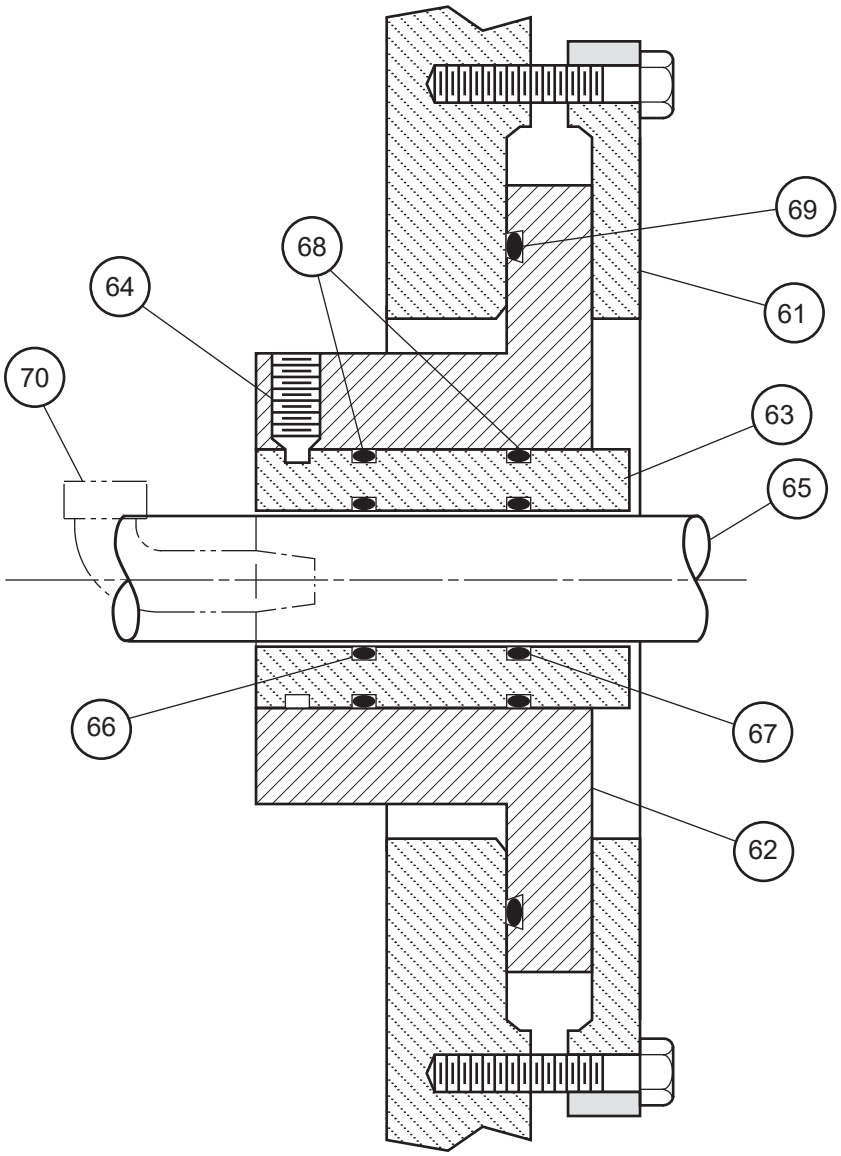

Section through Bulkhead Penetration Seal

Key	Description
61	Seal Housing Retaining Ring
62	Seal Housing Sleeve
63	Bronze Bushing Cartridge
64	Locking Set Screw
65	Shaft
66	Outboard Quad Seal
67	Inboard Quad Seal
68	Cartridge O-Ring Seals
69	Housing O-Ring Seal
70	Seal Test Connection

Notes:

1. Each shaft penetrating the containment bulkhead or the atmosphere bulkhead is sealed with a cartridge type seal unit having double dynamic seals. A test connection is provided for pressure testing between the seals.

2. See Figure 3.8-14 for additional views and details of this seal in a typical bulkhead mechanical penetration.

Instructions Followed for Installing
Conax Fittings (P1 thru P4)

1) Install the Conax fitting into the bulkhead and pressure seal the leads before electrical boxes are fastened in place.
2) Use only the small hex for installing the Conax fitting into the bulkhead.
3) Use the larger hex for pressure sealing the leads.
4) Caution: Inside parts of the Conax fittings are easily lost. Do not take fitting apart.
5) Conax fittings to be installed from the pressure side only which means Conax fittings to be installed on the side of the bulkhead which the door hinges on.

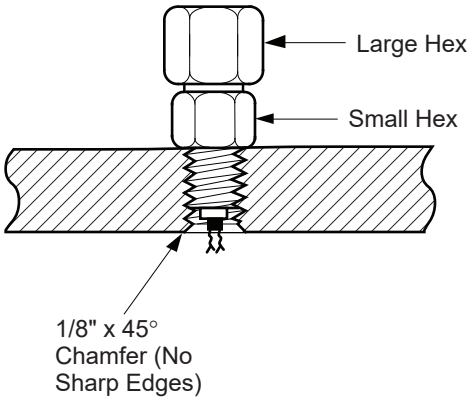

Note:
The locations of the Conax fittings are indicated on Figures 3.8-11 & 3.8-12

Columbia Generating Station Final Safety Analysis Report	Personnel Access Airlock - Typical Bulkhead Electrical Penetration		
	Draw. No. 990578.92	Rev.	Figure 3.8-16

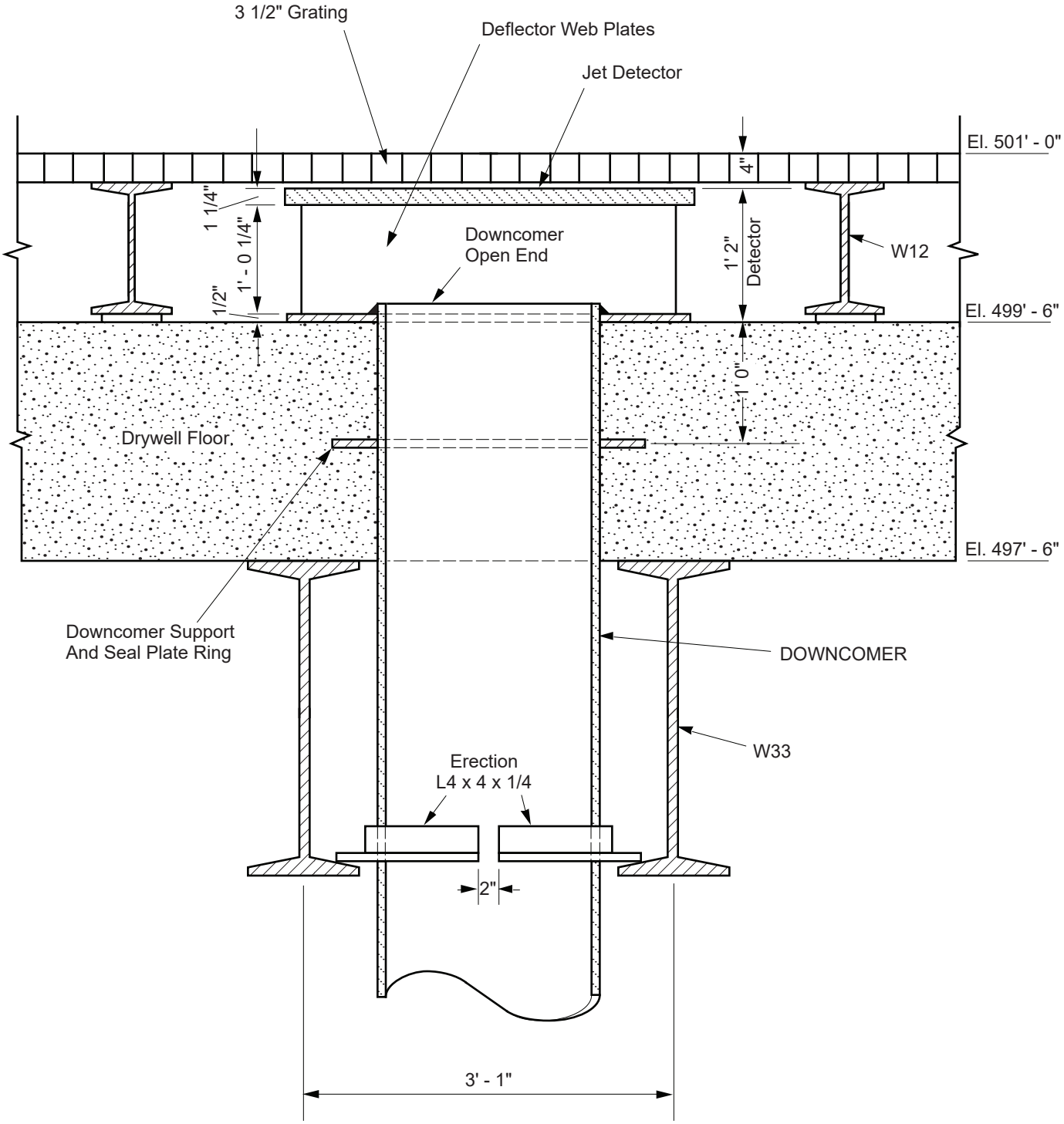

Columbia Generating Station **Final Safety Analysis Report**	**Primary Containment Vessel Drywell Floor Downcomer Vent Pipes**		
	Draw. No. 990306.73	Rev.	Figure 3.8-19

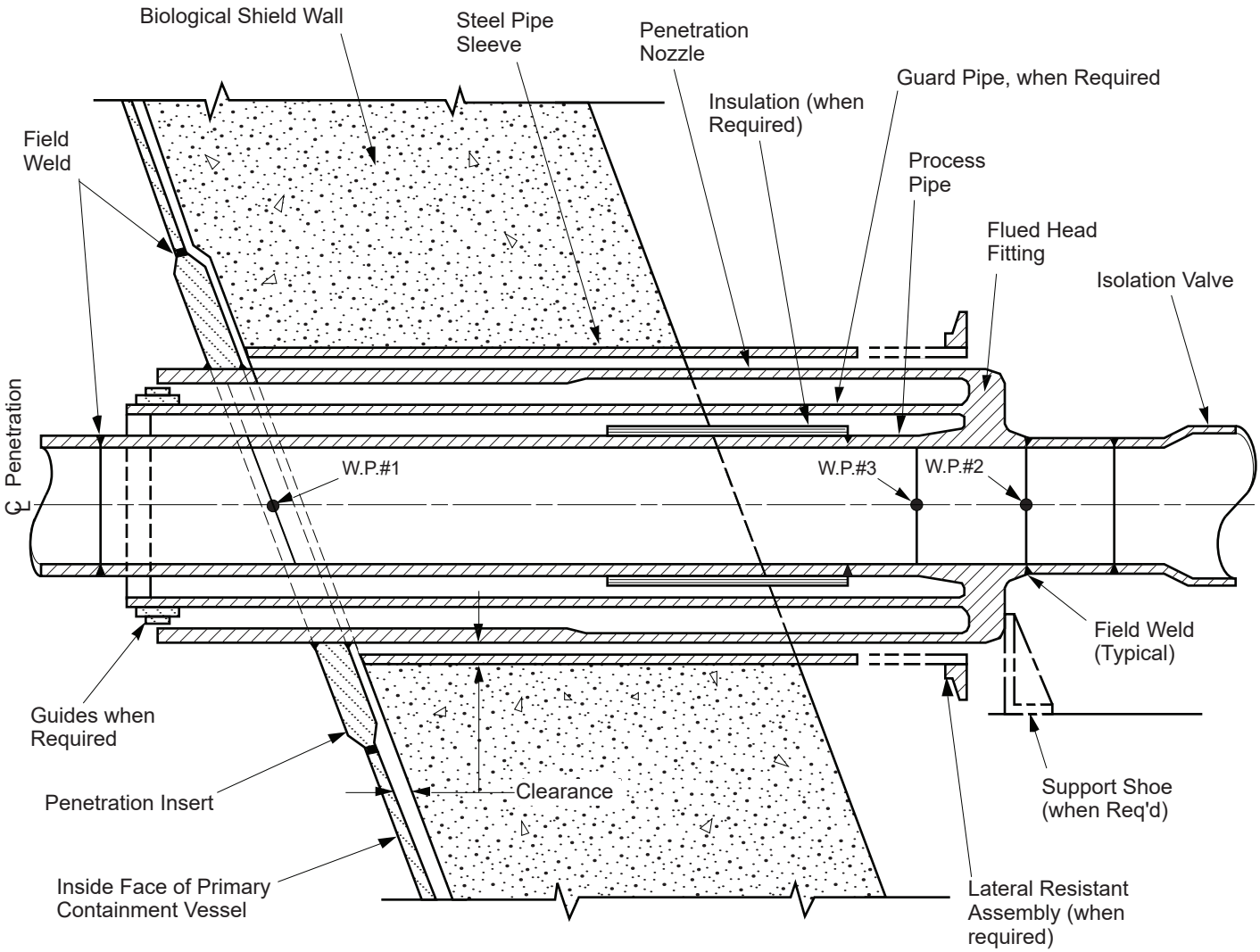

Columbia Generating Station
Final Safety Analysis Report

Primary Containment Vessel Penetration Assembly - Type 1 Pipe

Draw. No. 990306.74	Rev.	Figure 3.8-54

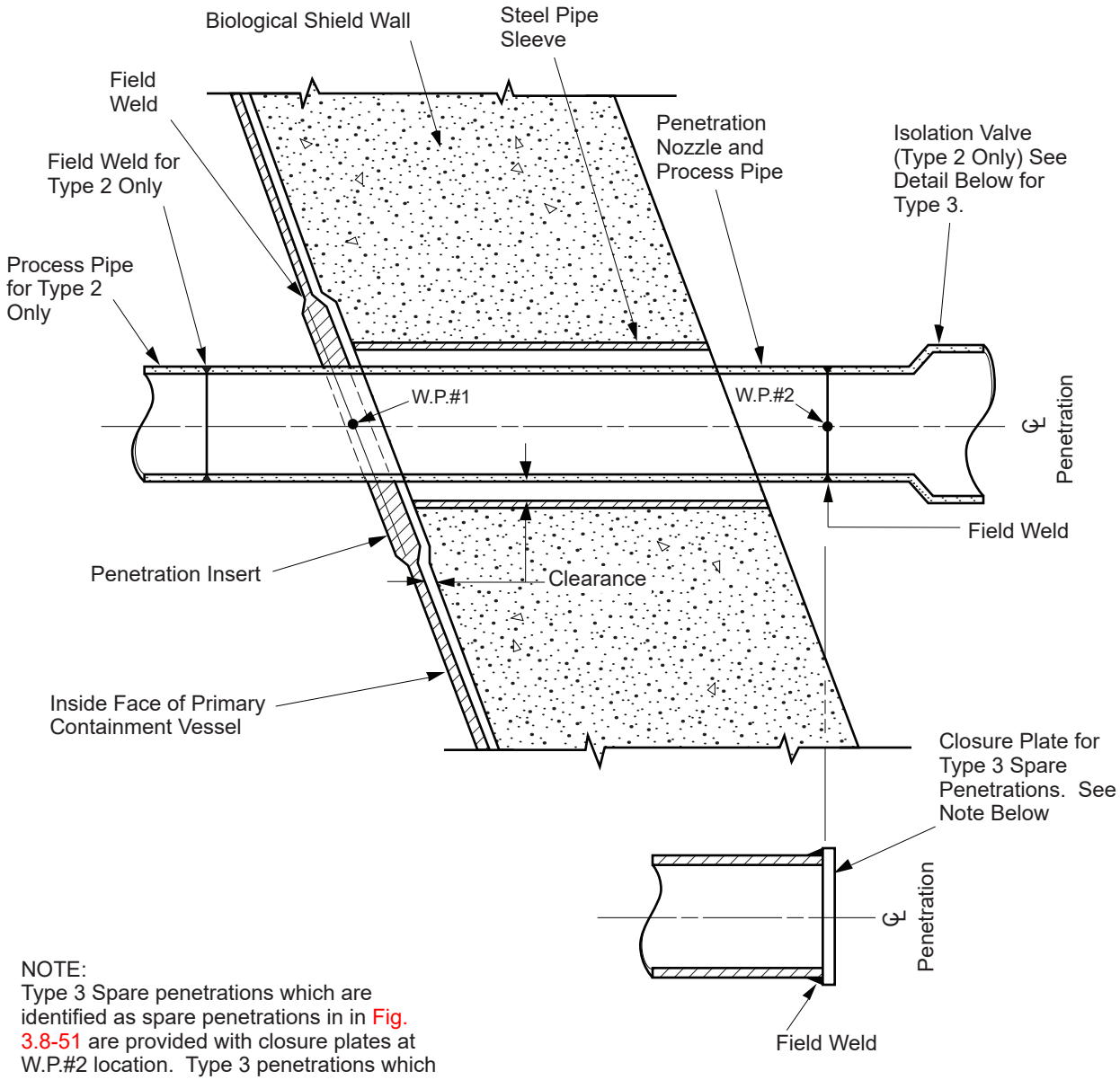

NOTE:
Type 3 Spare penetrations which are identified as spare penetrations in in Fig. 3.8-51 are provided with closure plates at W.P.#2 location. Type 3 penetrations which are not spare penetrations as indicated in Fig. 3.8-51, are not provided with permanent closure plates.

Columbia Generating Station Final Safety Analysis Report	**Primary Containment Vessel Penetration Assembly - Types 2 and 3 Pipe**		
	Draw. No. 990306.75	Rev.	Figure 3.8-55

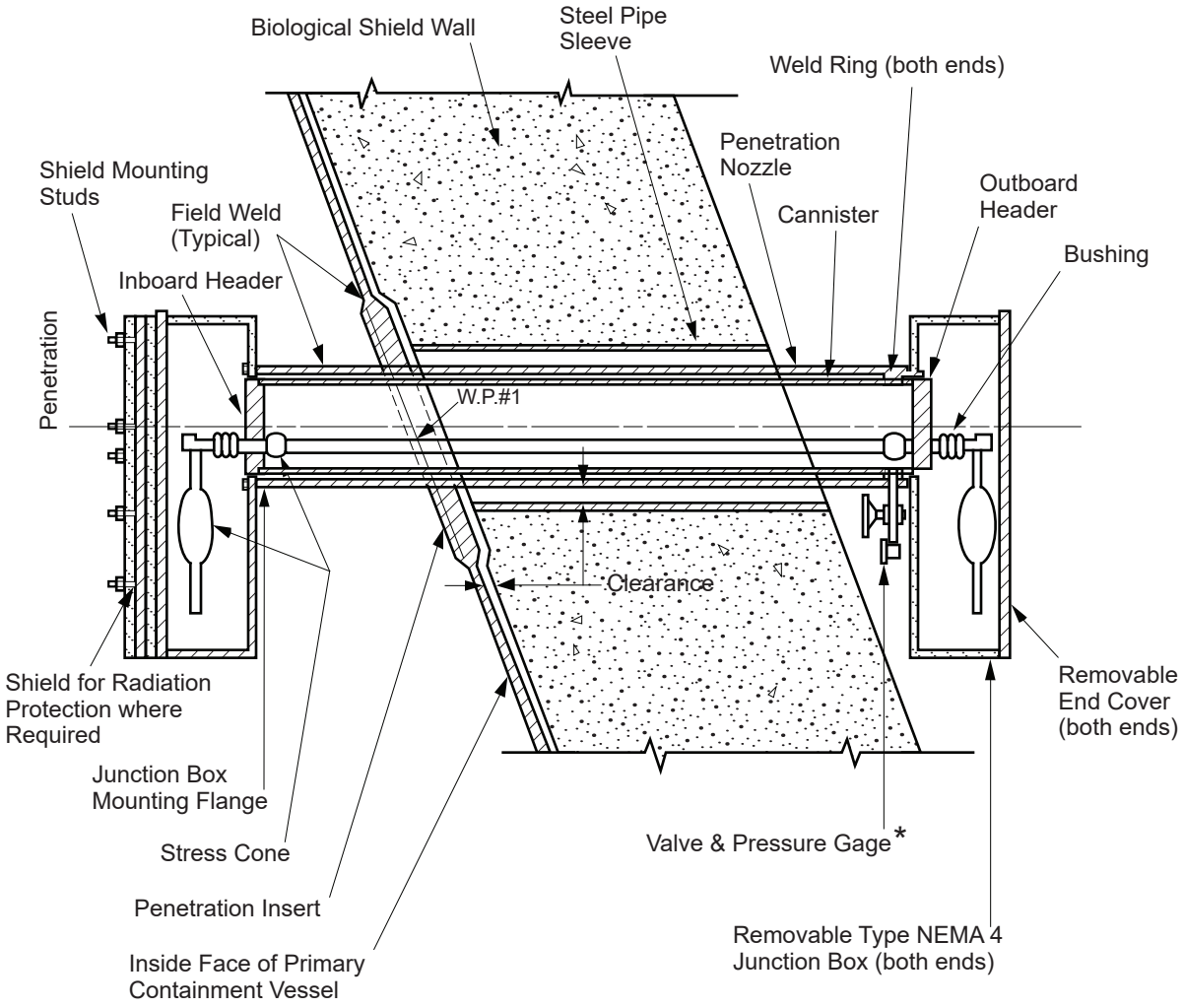

* This line is normally capped. Gage and valve are part of the local leak rate testing.

Columbia Generating Station Final Safety Analysis Report	**Primary Containment Vessel Penetration Assembly - Type 4 Electrical Canister Type**		
	Draw. No. 990306.76	Rev.	Figure 3.8-56

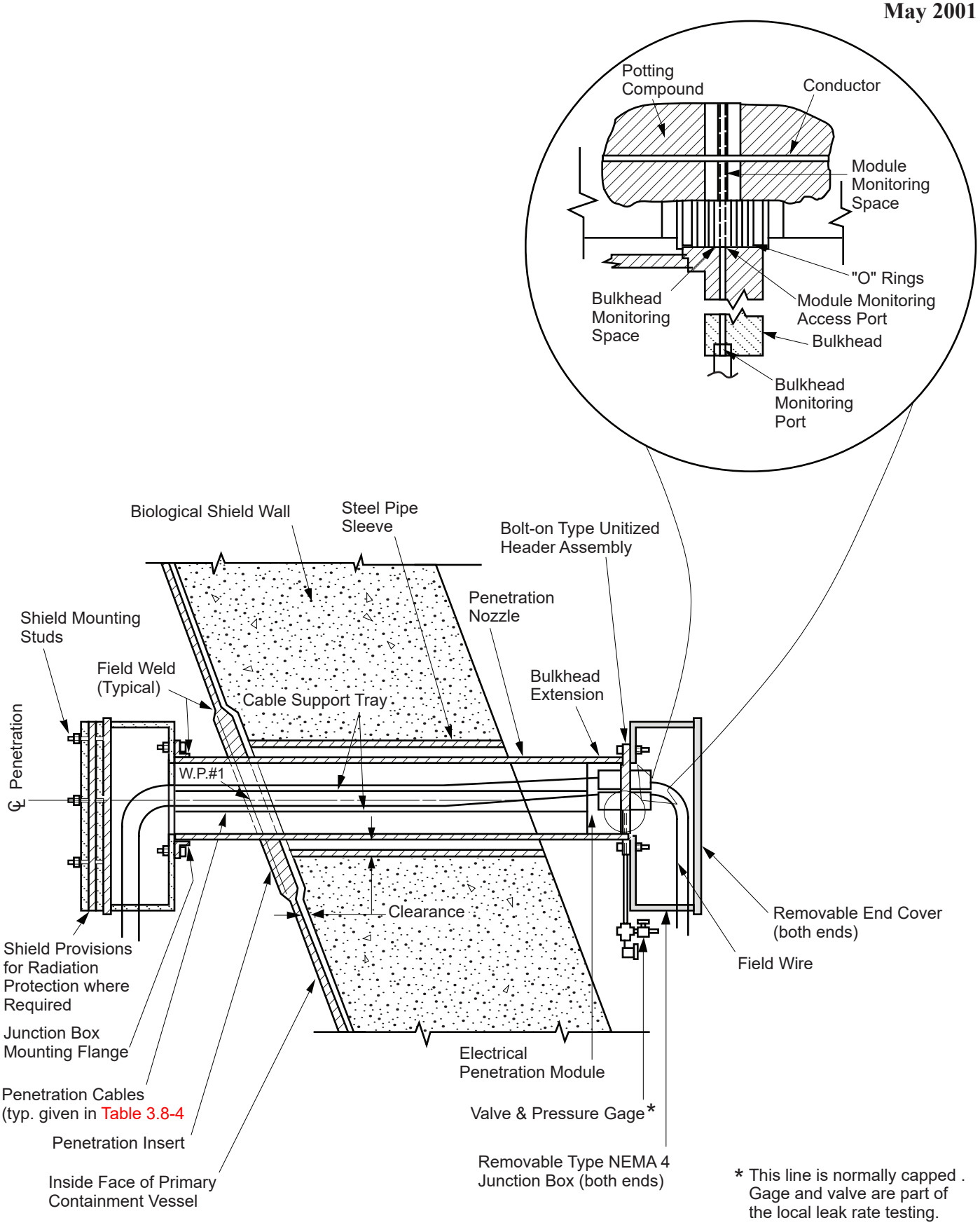

* This line is normally capped . Gage and valve are part of the local leak rate testing.

Columbia Generating Station
Final Safety Analysis Report

Primary Containment Vessel Penetration Assembly - Type 4 Electrical Non-Canister Type

Draw. No. 990306.77	Rev.	Figure 3.8-57

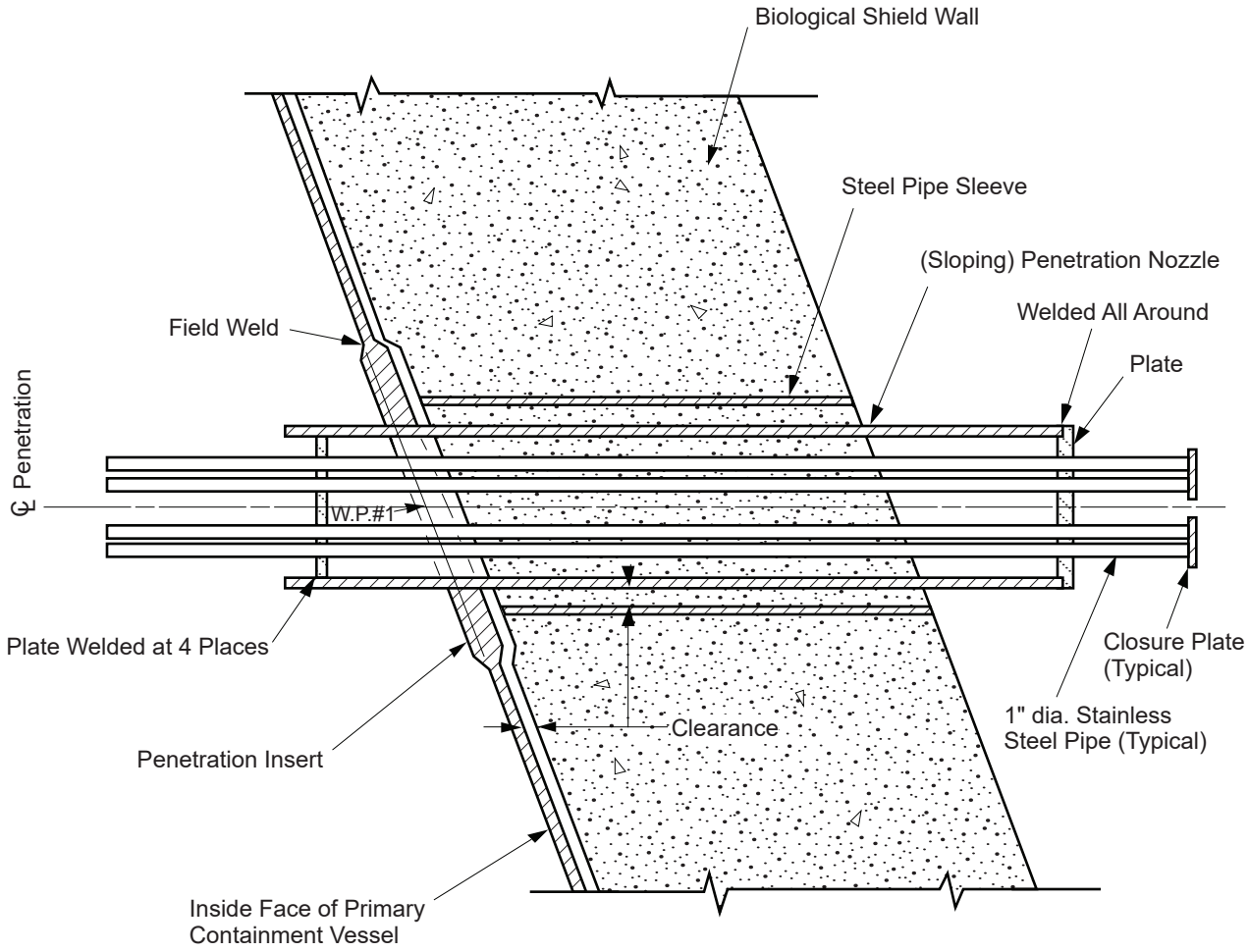

Columbia Generating Station
Final Safety Analysis Report

Primary Containment Vessel Penetration Assembly - Types 5, 6, And 7 Instrumentation

Draw. No. 990306.78	Rev.	Figure 3.8-58

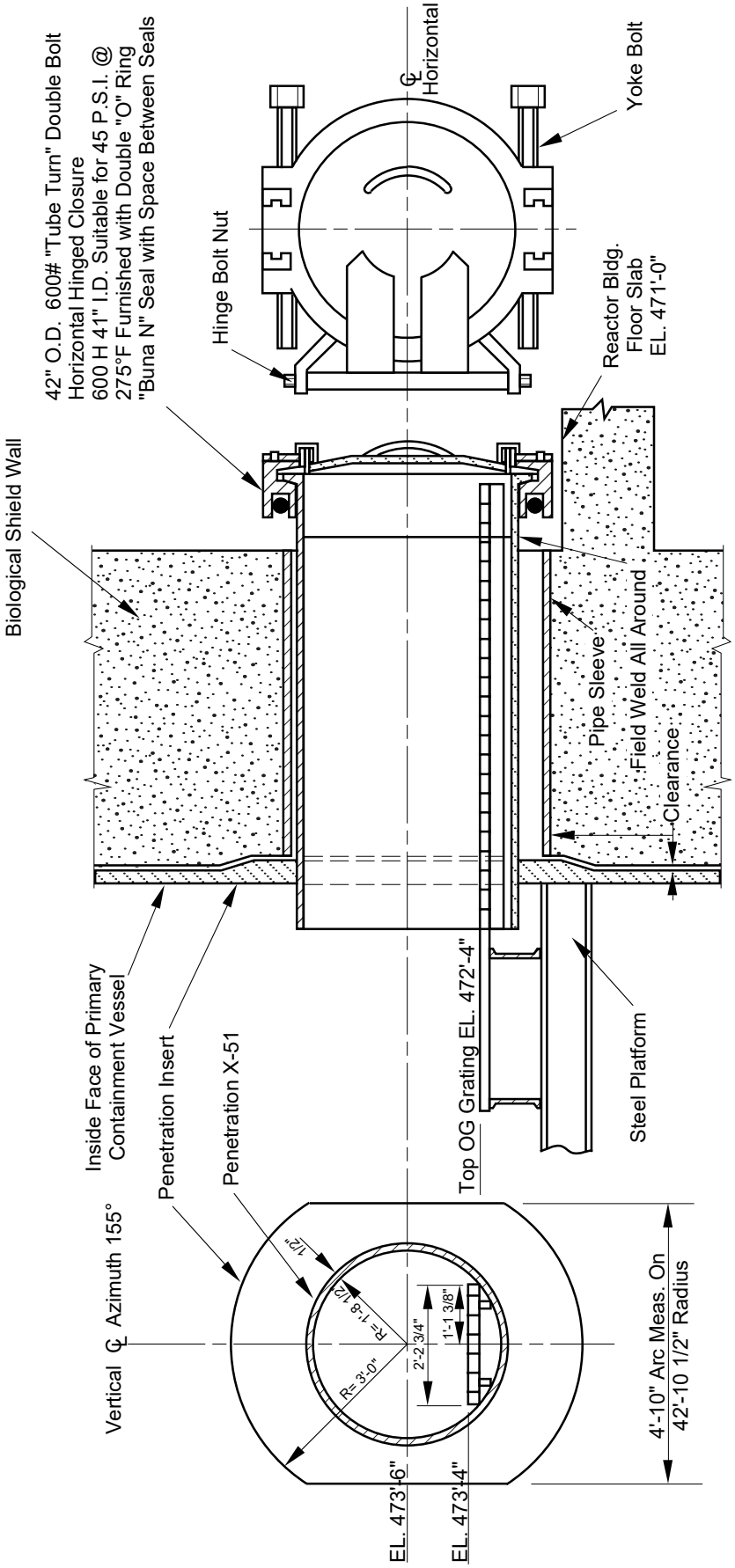

Columbia Generating Station
Final Safety Analysis Report

Primary Containment Vessel Suppression Chamber Access Hatch

Draw. No. 010126.16	Rev.	Figure 3.8-59

Form No. 960690

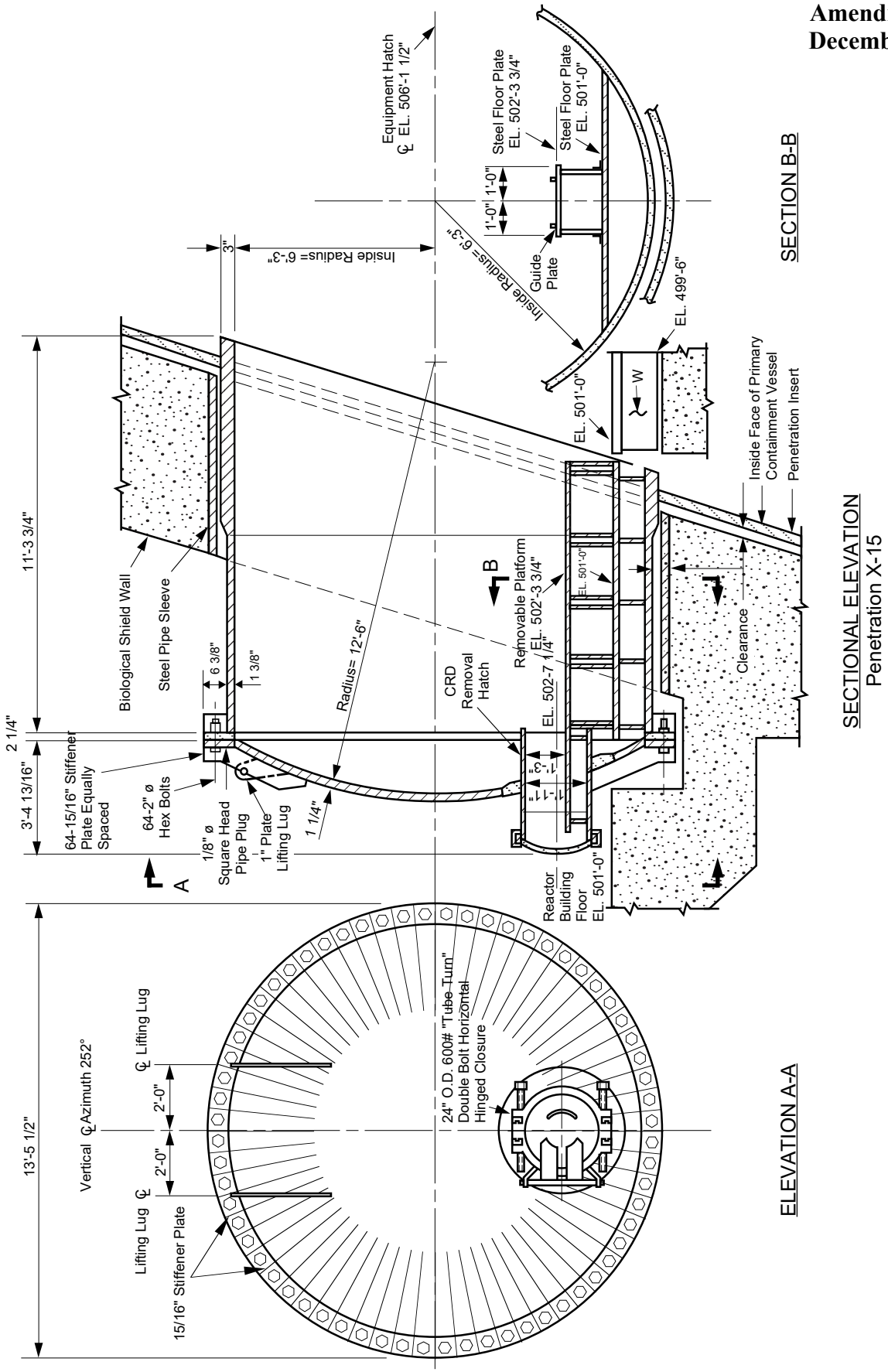

Columbia Generating Station
Final Safety Analysis Report

Primary Containment Vessel Equipment Hatch and CRD Removal Hatch

Draw. No. 010126.19	Rev.	Figure 3.8-60

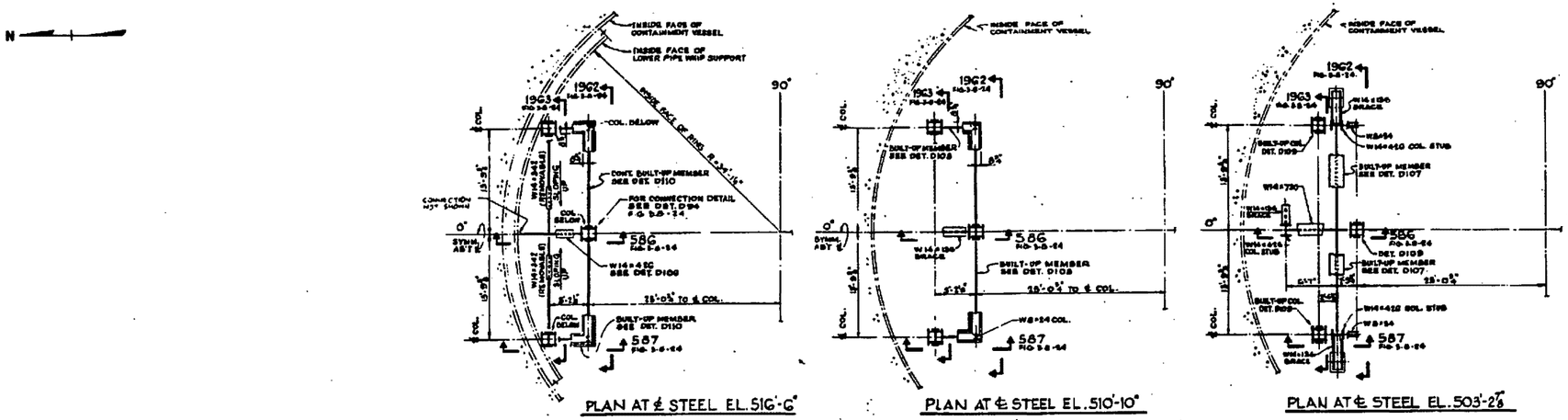

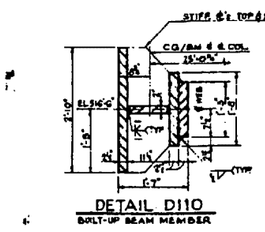

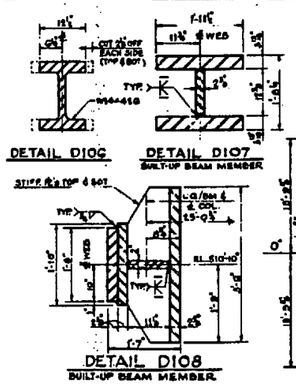

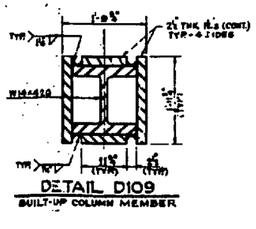

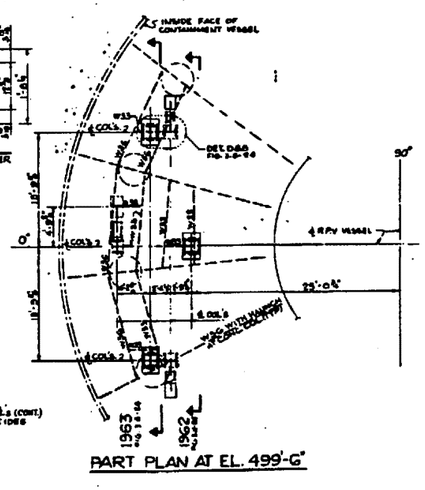

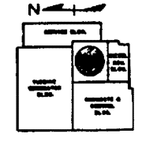

Columbia Generating Station Final Safety Analysis Report	Primary Containment Vessel Radial Beam Framing Systems		
	Draw. No. 020552.12	Rev.	Figure 3.8-61

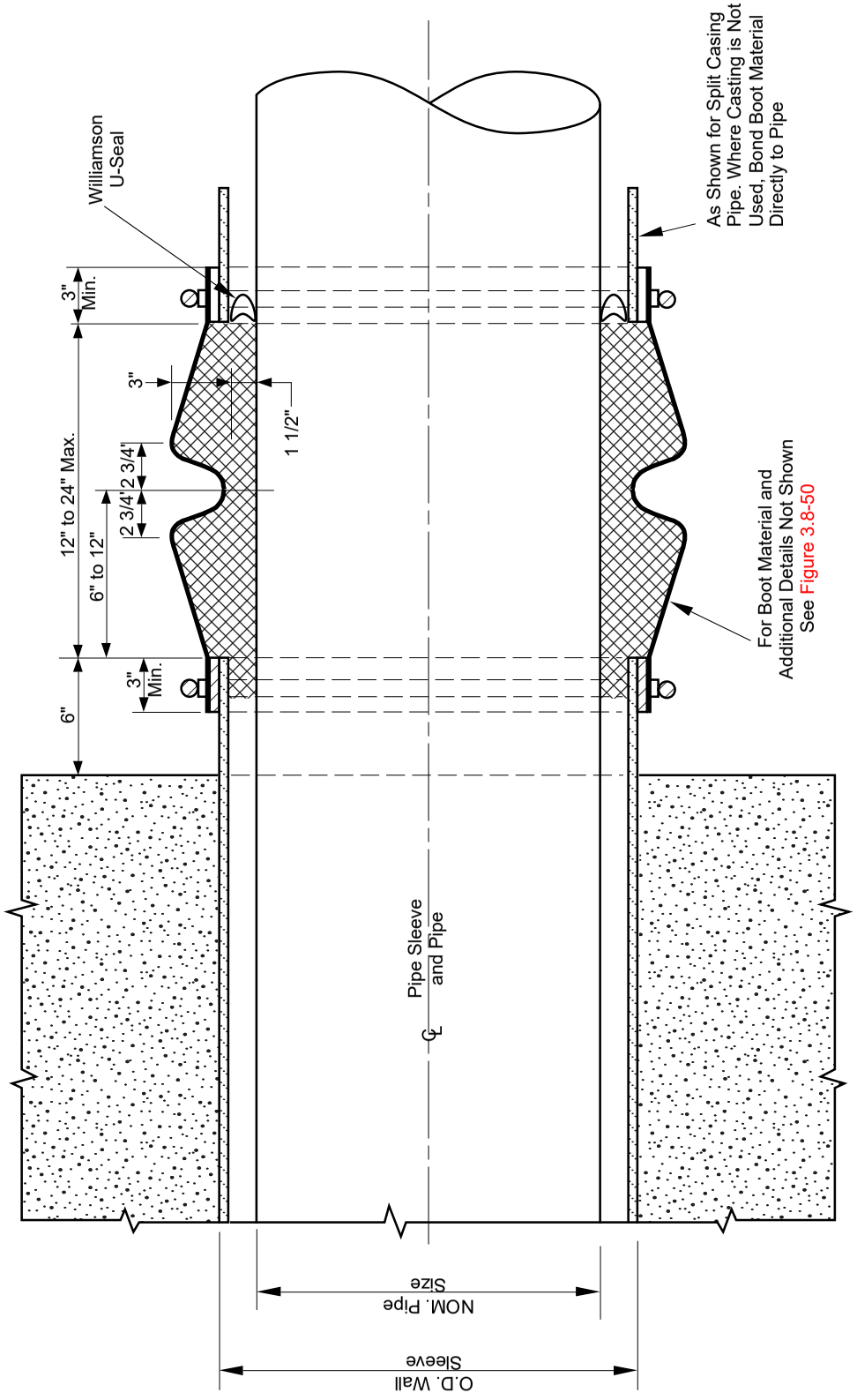

Columbia Generating Station Final Safety Analysis Report	Underground Pipe Penetration Flexible Watertight Closure Boot		
	Draw. No. 010126.20	Rev.	Figure 3.8-62

3.9 MECHANICAL SYSTEMS AND COMPONENTS

3.9.1 SPECIAL TOPICS FOR MECHANICAL COMPONENTS

3.9.1.1 Design Transients

This section shows the transients that are used in the design of the ASME Boiler and Pressure Vessel (B&PV) Code Section III, Class 1, control rod drive (CRD) components, reactor assembly including core supports and reactor internals, main steam, and recirculation systems. The number of cycles or events for each transient is included. The design transients shown in this section are included in the design specifications for the components. Transients or combinations of transients are classified with respect to the component operating condition categories identified as "normal," "upset," "emergency," "faulted," or "testing" in the ASME Code if applicable. (The first four operating condition categories correspond to Service Levels A, B, C, and D, respectively, which are used in Section III after the Winter 1976 Addenda.)

3.9.1.1.1 Control Rod Drive Transients

The normal and test service load cycles used for design purposes for the life of the CRDs are as follows:

	Transient	Category	Cycles
a.	Reactor startup/shutdown	Normal/upset	250
b.	Vessel pressure tests	Normal/upset	65
c.	Vessel overpressure	Normal/upset	10
d.	Scram test plus startup scrams	Normal/upset	300
e.	Operational scrams	Normal/upset	300
f.	Jog cycles	Normal/upset	30,000
g.	Shim/drive cycles	Normal/upset	1000

In addition to the above cycles, the following have been considered in the design of the CRD.

h.	Scram with inoperative buffer	Normal/upset	10

i.	Scram with stuck control blade faulted	Normal/upset	1
j.	Operating Basis Earthquake (OBE)*	Normal/upset	10
k.	Safe Shutdown Earthquake (SSE)**	Faulted	1

All ASME Class 1 components of the CRD have been analyzed according to ASME Code Section III.

The capability of the CRDs to withstand emergency and faulted conditions is verified by test rather than analysis.

3.9.1.1.2 Control Rod Drive Housing and In-Core Housing Transients

The number of transients, their cycles, and classification as considered in the design and fatigue analysis of the CRD housing and in-core housing are as follows:

	Transient	Category	Cycles
a.	Normal startup and shutdown	Normal/upset	250
b.	Vessel pressure tests	Normal/upset	65
c.	Vessel overpressure tests	Normal/upset	10
d.	Interruption of feedwater flow	Normal/upset	80
e.	Scram	Normal/upset	200
f.	OBE	Normal/upset	10
g.	SSE	Faulted	1

* The frequency of occurrence of this transient would indicate emergency category. However, for conservatism, the OBE condition was analyzed as an upset condition. Ten peak OBE cycles are postulated.

** SSE is a faulted condition; however, in the stress analysis, it was treated as emergency with lower stress limits.

CRD Housing Only

h.	Stuck rod scram	Normal/upset	1
i.	Scram no buffer	Normal/upset	10

3.9.1.1.3 Hydraulic Control Unit Transients

The normal and test service load cycles used in the design and fatigue analysis for the life of the hydraulic control unit (HCU) are as follows:

	Transient	Category	Cycles
a.	Normal startup and shutdown	Normal/upset	250
b.	Vessel pressure tests	Normal/upset	65
c.	Vessel overpressure tests	Normal/upset	10
d.	Scram tests (cold)	Normal/upset	300
e.	Operational scrams (hot)	Normal/upset	300
f.	Jog cycles	Normal/upset	30,000
g.	Drive cycles	Normal/upset	1000
h.	Scram with stuck scram discharge valve	Normal/upset	1
i.	OBE	Normal/upset	10
j.	SSE	faulted	1

3.9.1.1.4 Core Support and Reactor Internals Transients

The normal and test service load cycles used for the design and fatigue analysis for the life of the core support and reactor internals are shown in Table 3.9-1.

3.9.1.1.5 Nuclear Steam Supply System Scope Main Steam System Transients

The following transients are considered in the stress analysis of the main steam piping between the reactor pressure vessel (RPV) and the outer containment isolation valve:

	Transient	Category	Cycles
a.	Startup	Normal	250
b.	Loss of feedwater pump isolation valves closed	Upset	20
c.	Scrams	Upset	150
d.	Shutdown	Normal	250
e.	Reactor overpressure delayed scram	Emergency	1
f.	Single safety/relief valve (SRV) blowdown	Upset	8
g.	Automatic blowdown	Emergency	1
h.	Design pressure leak test	Test	65
i.	OBE	Upset	50
j.	1.25 P hydrotest	Test	3
k.	SSE	Faulted	1
l.	Pipe rupture	Faulted	1

3.9.1.1.6 Recirculation System Transients

The following transients are considered in the stress analysis of the recirculation piping:

	Transient	Category	Cycles
a.	Startup	Normal	250
b.	Turbine roll and increase to power	Normal	Included in Startup Transient
c.	Loss of feedwater heater	Upset	10

d.	Partial feedwater heater bypass	Upset	70
e.	Scrams	Upset	150
f.	Shutdown	Normal	250
g.	Loss of feedwater pump isolation valves closed	Upset	20
h.	Reactor overpressure with delayed scram	Emergency	1
i.	Single SRV blowdown	Upset	8
j.	Automatic blowdown	Emergency	1
k.	Design pressure leak test	Test	65
l.	OBE	Upset	50
m.	1.25 P hydrotest	Test	3
n.	SSE	Faulted	1
o.	Pipe rupture	Faulted	1

3.9.1.1.7 Reactor Assembly Transients

The reactor assembly includes the RPV, support skirt, and shroud support. The cycles listed in Table 3.9-1 were specified in the reactor assembly design and fatigue analysis.

3.9.1.1.8 Main Steam Isolation Valve Transients

The main steam isolation valves (MSIV) are designed for the following service conditions and thermal cycles:

	Transient	Category	Cycles
a.	Preoperational at 100°F	Normal/upset	150
b.	Startup (heating 100°F)	Normal/upset	250

c. Shutdown

	Transient	Category	Cycles
1.	Cooling cycles at 100°F/hr 540°F to 375°F	Normal/upset[1]	250
2.	Cooling cycles at 270°F/hr 375°F to 330°F	Normal/upset[1]	250
3.	Cooling cycles at 100°F/hr 330°F to 100°F	Normal/upset[1]	250
d.	Scram cooling cycles at 100°F/hr	Upset	150
e.	Emergency and faulted transients		
1.	546°F to 281°F in 15 sec	Emergency/faulted	1
2.	546°F to 375°F in 3.3 minutes	Emergency/faulted	1
	375°F to 281°F at 300°F/hr	Emergency/faulted	1
3.	546°F to 375°F in 10 minutes	Emergency/faulted	8
4.	375°F to 281°F at 100°F/hr	Emergency/faulted	8
5.	546°F to 583°F in 2 sec	Emergency/faulted	1
	583°F to 538°F in 30 sec	Emergency/faulted	1
	538°F to 400°F at 100°F/hr	Emergency/faulted	1

Note 1: One of the 250 cooling cycles is categorized as Emergency

	400°F to 546°F at 100°F/hr	Emergency/faulted	1
6.	561°F to 500°F in 7 minutes	Emergency/faulted	10
7	500°F to 400°F at 100°F/hr	Emergency/faulted	10
8.	400°F to 546°F at 100°F/hr	Emergency/faulted	10

3.9.1.1.9 Main Steam Safety/Relief Valve Transients

The transients used in the analysis of the SRV are as follows:

	Transient	Category	Cycles
a.	Preoperational and inservice testing (100°F/hr)	Normal/upset	150
b.	Startup (100°F/hr) and pressure increase (0 psig to 1000 psig)	Normal/upset	250
c.	Shutdown (100°F/hr, pressure decrease to 0 psig)	Normal/upset	250
d.	Scram	Upset	150
e.	System pressure and temperature decay from 1000 psig 546°F to 35 psig and 281°F within 15 sec	Emergency/faulted	1
f.	System temperature change from 546°F to 375°F within 3.3 minutes and from 375°F to 281°F at a rate of 300°F/hr. Pressure change from 1000 psig to 35 psig.	Emergency/faulted	1

g.	System temperature change from 546°F to 375°F within 10 minutes and from 375°F to 281°F at a rate of 100°F/hr. Pressure change from 1000 psig to 35 psig.	Normal/upset	8
h.	System temperature change from 546°F to 583°F within 2 sec, from 583°F to 538°F within 30 sec, and from 538°F to 400°F and return to 546°F at a rate of 100°F/hr. Pressure change from 1000 psig to 1350 psig thence to 240 psig and return to 1000 psig.	Emergency/faulted	1
i.	System temperature changes, greater than 30°F, from 561°F to 500°F within 7 minutes and from 500°F to 400°F and return to normal operating temperature of 546°F at a rate of 100°F/hr. Pressure change from 1000 psig to 1180 psig to 240 psig and return to normal operating of 1000 psig.	Emergency/faulted	10

Paragraph NB-3552 of ASME Code Section III excludes various transients and provides means for combining those which are not excluded. Review and approval of the equipment supplier's certified calculation provides assurance of proper accounting of the specified transients.

3.9.1.1.10 Recirculation Flow Control Valve Transients

The following pressure and temperature transients were considered in the design of the recirculation system flow control valve (this valve has been blocked open):

	Transient	Category	Cycles
a.	Startup (100°F/hr) heating rate 70°F to design temperature	Normal/upset	300
b.	Small temperature changes (29°F)	Normal/upset	600

c.	50°F step changes	Normal/upset	200
d.	Safety/relief valve blowdowns (single valve) (546°F to 375°F in 10 minutes)	Normal/upset	30
e.	Safety valve transient (110% of design pressure)	Normal/upset	1
f.	Installed hydrotests		
	1. 1300 psig	Testing	65
	2. 1670 psig	Testing	3
g.	Automatic blowdown (546°F to 281°F in 15 sec)	Emergency	2
h.	Improper start of pump in cold loop (130°F step to 546°F for 15 sec)	Emergency	1

3.9.1.1.11 Recirculation Pump Transients

The following transients are listed in the design specification as a requirement for design considerations. However, a submitted certified analysis considering thermal stresses was not required. The vendor was required to submit a certification of compliance. The submitted certified design calculations only considered pressure transient. Nozzle piping loads were considered in accordance with the following ASME paragraph:

> "The pump case shall be designed to withstand secondary stresses due to piping reactions in accordance with ASME Code, Section III, 1971."

	Transient	Category	Cycles
a.	Heatup and cooldown at 100°F/hr	Normal/upset	300
b.	±29°F temperature changes	Normal/upset	600
c.	±50°F temperature changes	Normal/upset	200

d.	RPV pressure transients to 110% design pressure	Normal/upset	1
e.	SRV blowdowns	Emergency	8
f.	Improper pump startup, 100°F to 552°F in 15 sec	Emergency	1
g.	Cooling transient 552°F to 281°F in 15 sec	Faulted	1
h.	Hydrotest to 1300 psig	Testing	130
i.	Hydrotest to 1670 psig	Testing	3

3.9.1.1.12 Recirculation Gate Valve Transients

The following transients are considered in the design of the recirculation gate valves:

	Transient	Cycles
a.	50°F to 575°F at 100°F/hr	300
b.	$\pm$29°F between limits of 50°F and 575°F, instantaneous	600
c.	$\pm$50°F between limits of 50°F and 546°F, instantaneous	200
d.	546°F to 375°F, instantaneous	30
e.	546°F to 281°F, instantaneous	2
f.	130°F to 546°F, instantaneous	1
g.	110% design pressure at 575°F	1
h.	1300 psi at 100°F installed hydrostatic test	65
i.	1670 psi at 100°F installed hydrostatic test	3

3.9.1.1.13 Balance-of-Plant Transients

The transients used in design and fatigue analysis of the balance-of-plant (BOP) components are listed in Table 3.9-1 with the exception that 50 maximum stress cycles due to an OBE are used in fatigue evaluations. Table 3.9-1 also shows the thermal cycles which are tracked to provide an indication of reactor cumulative fatigue usage.

3.9.1.2 Nuclear Steam Supply System Computer Programs Used in Original Analysis

The following italicized text is historical information provided in the FSAR to support the application for an operating license. As such, it is not subject to change and therefore has not been verified for accuracy or updated during the FSAR upgrade process per 10 CFR 50.71(e).

The following sections discuss computer programs used in the analysis of the major safety-related components. (Computer programs were not used in all components; hence not all components are listed.) The nuclear steam supply system (NSSS) programs can be divided into two categories.

Vendor Programs

The verification of the following two groups of vendor programs is ensured by contractual requirements between GE and the vendor. The quality assurance procedure of these proprietary programs used in the design of N-stamped equipment is in full compliance with 10 CFR 50, Appendix B.

CB&I Programs

711 GENOZZ
948 NAPALM
1027
846
781 KALNINS
979 ASFAST
766 TEMAPR
767 PRINCESS
928 TGRV
962E962A
984
992 GASP
1037 DUNHAM'S
1335
1606 and 1657 HAP

1635
953
955 MESHPLOT
1028
1038

GE Programs

The verification of the following GE programs has been performed in accordance with the requirements of 10 CFR 50, Appendix B. Evidence of the verification of input, output, and methodology is documented in GE Design Record Files.

MASS.
SNAP (MULTISHELL)
HEATER
PISYS
ANSI7
SAP4G
FTFLG01
ANSYS
BSTIF01
RTRMEC
POSUM
BILRD
RVFOR
TSFOR
LUGST
PDA
DYSEA
SPECA
SEISM

3.9.1.2.1 Reactor Pressure Vessel and Internals

3.9.1.2.1.1 Reactor Pressure Vessel. CB&I Programs are used to analyze the RPV. Detailed descriptions are provided in Sections 3.9.1.2.1.1.1 through 3.9.1.2.1.1.20.

3.9.1.2.1.1.1 CB&I Program 7-11 - "GENOZZ". The GENOZZ computer program is used to proportion barrel and double taper type nozzles to comply with the specifications of the ASME Code, Section III and contract documents. The program will either design such a configuration or analyze the configuration input into it. If the input configuration will not comply with the specifications, the program will modify the design and redesign it to yield an acceptable result.

3.9.1.2.1.1.2 CB&I Program 9-48 - "NAPALM". The basis for the program NAPALM, Nozzle Analysis Program-All Loads Mechanical, is to analyze nozzles for mechanical loads and find the maximum stress intensity and location. The program analyzes at specified locations from the point of application of the mechanical loads. At each location the maximum stress intensity is calculated for both the inside and outside surfaces of the nozzle. The program gives the maximum stress intensity for both the inside and outside surfaces of the nozzle, as well as its angular location around the circumference of the nozzle from the 0 reference location. The principal stresses are also printed. The stresses resulting from each component of loading (bending, axial, shear, and torsion) are printed, as well as the loadings which caused these stresses.

3.9.1.2.1.1.3 CB&I Program 1027. This program is a computerized version of the analysis method contained in the "Welding Research Council Bulletin F107, December 1965."

Part of this program provides for the determination of the shell stress intensities (S) at each of four cardinal points at both the upper and lower shell plate surfaces (ordinarily considered outside and inside surfaces) around the perimeter of a loaded attachment on a cylindrical or spherical vessel. With the determination of each S, there is also determined the components of that S (two normal stresses and one shear stress). This program provides the same information as the manual calculation and the input data is essentially the geometry of the vessel and attachment.

3.9.1.2.1.1.4 CB&I Program 846. This program computes the required thickness of a hemispherical head with a large number of circular parallel penetrations by means of the area replacement method in accordance with the ASME Code, Section III.

In cases where the penetration has a counterbore, the thickness is determined so that the counterbore does not penetrate the outside surface of the head.

3.9.1.2.1.1.5 CB&I Program 781 - "KALNINS". This program is a thin elastic shell program for shells of revolution. This program was developed by Dr. A. Kalnins of Lehigh University. Extensive revisions and improvements have been made by Dr. J. Endicott to yield the CB&I version of this program.

The basic method of analysis was published by Professor Kalnins in the Journal of Applied Mechanics, Volume 31, September 1964, pages 467 through 476.

The KALNINS thin shell program (Program 781) is used to establish the shell influence coefficient and to perform detail stress analysis of the vessel. The stresses and the deformations of the vessel can be computed for any combination of the following axisymmetric loading:

a. Preload condition,
b. Internal pressure, and
c. Thermal load.

3.9.1.2.1.1.6 CB&I Program 979 - "ASFAST". ASFAST Program (Program 979) performs the stress analysis of axisymmetric, bolted closure flanges between head and cylindrical shell.

3.9.1.2.1.1.7 CB&I Program 766 - "TEMAPR". This program will reduce any arbitrary temperature gradient through the wall thickness to an equivalent linear gradient. The resulting equivalent gradient will have the same average temperature and the same temperature-moment as the given temperature distribution. Input consists of plant thickness and actual temperature distribution. The output contains the average temperature and total gradient through the wall thickness. The program is written in FORTRAN IV language.

3.9.1.2.1.1.8 CB&I Program 767 - "PRINCESS". The PRINCESS computer program calculates the maximum alternating stress amplitudes from a series of stress values by the method in Section III of the ASME Pressure Vessel Code.

3.9.1.2.1.1.9 CB&I Program 928 - "TGRV". The TGRV program is used to calculate temperature distributions in structures or vessels. Although it is primarily a program for solving the heat conduction equations, some provisions have been made for including radiation and convection effects at the surfaces of the vessel.

The TGRV program is a greatly modified version of the TIGER heat transfer program written about 1958 at Knolls Atomic Power Laboratory, by A. P. Bray. There have been many versions of TIGER in existence including TIGER II, TIGER II B, TIGER IV, and TIGER V, in addition to TGRV.

The program utilizes an electrical network analogy to obtain the temperature distribution of any given system as a function of time. The finite difference representation of the three-dimensional equations of heat transfer are repeatedly solved for small time increments and continually summed. Linear mathematics are used to solve the mesh network for every time interval. Included in the analysis are the three basic forms of heat transfer, conduction, radiation, and convection, as well as internal heat generation.

Given any odd-shaped structure, which can be represented by a three-dimensional field, its geometry and physical properties, boundary conditions, and internal heat generation rates, TGRV will calculate and give as output the steady state or transient temperature distributions in the structure as a function of time.

3.9.1.2.1.1.10 CB&I Program 962 - "E0962A". Program E0962A is one of a group of programs (E0953A, E1606A, E0962A, E0992N, E1037N, and E0984N) which are used

together to determine the temperature distribution and stresses in pressure vessel components by the finite element method.

Program E0962A is primarily a plotting program. Using the nodal temperatures calculated by program E1606A or Program E0928A, and the node and element cards for the finite element model, it calculates and plots lines of constant temperature (isotherms). These isotherm plots are used as part of the stress report to present the results of the thermal analysis. They are also very useful in determining at which points in time the thermal stresses should be determined.

In addition to its plotting capability the program can also determine the temperatures of some of the nodal points by interpolation. This feature of the program is intended primarily for use with the compatible TGRV and finite element models that are generated by program E0953A.

3.9.1.2.1.1.11 CB&I Program 984. Program 984 is used to calculate the stress intensity of the stress differences, on a component level, between two different stress conditions. The calculation of the stress intensity of stress component differences (the range of stress intensity) is required by Section III of the ASME Code.

3.9.1.2.1.1.12 CB&I program 992 - "GASP". The GASP computer program, originated by Professor E. L. Wilson of the University of California at Berkeley, uses the finite element method to determine the stresses and displacements of plane or axisymmetric structures of arbitrary geometry and is written in FORTRAN IV. For a detailed account, see Reference 3.9-1.

As mentioned above, the program determines the stresses and displacements of plane or axisymmetric structures using the finite element method. The structures may have arbitrary geometry and have linear or non-linear material properties. The loadings may be thermal, mechanical, accelerational, or a combination of these.

The structure to be analyzed is broken up into a finite number of discrete elements or "finite-elements" which are interconnected at finite number of "nodal-points" or "nodes." The actual loads on the structure are simulated by statically equivalent loads acting at the appropriate nodes. The basic input to the program consists of the geometry of the stress-model and the boundary conditions. The program then gives the stress components at the center of each element and the displacements at the nodes, consistent with the prescribed boundary conditions.

3.9.1.2.1.1.13 CB&I Program 1037 - "DUNHAM'S". DUNHAM'S program is a finite ring element stress analysis program. It will determine the stresses and displacements of axisymmetric structures of arbitrary geometry subjected to either axisymmetric loads or non-axisymmetric loads represented by a Fourier series.

This program is similar to the GASP program (CB&I 992). The major differences are that DUNHAM'S can handle non-axisymmetric loads (which requires that each node have three degrees of freedom) and the material properties for DUNHAM'S must be constant. As in GASP, the loadings may be thermal, mechanical, and accelerational.

3.9.1.2.1.1.14 CB&I Program 1335. To obtain stresses in the shroud support, the baffle plate must be made a continuous circular plate. The program makes this modification and allows the baffle plate to be included in CB&I program 781 as two isotropic parts and an orthotropic portion at the middle where the diffuser holes are located.

3.9.1.2.1.1.15 CB&I Programs 1606 and 1657 - "HAP". The HAP program is an axisymmetric nonlinear heat analysis program. It is a finite element program and is used to determine nodal temperatures in a two-dimensional or axi-symmetric body subjected to transient disturbances. Programs 1606 and 1657 are identical except that 1606 has a larger storage area allocated and can thus be used to solve larger problems. The model for program 1606 is compatible with CB&I stress programs 992 and 1037.

3.9.1.2.1.1.16 CB&I Program 1635. Program 1635 offers three features to aid the stress analyst in preparing a stress report.

a. Generates punched card input for program 767 (PRINCESS) from the stress output of program 781 (KALNINS),

b. Writes a stress table in a format such that it can be incorporated into a final stress report, and

c. Has the option to remove through-wall thermal bending stress and report these results in a stress table similar to the one mentioned above.

3.9.1.2.1.1.17 CB&I Program 953. The program is a general purpose program, which does the following:

a. Prepares input cards for the thermal model,

b. Prepares the node and element cards for the finite element model, and

c. Sets up the model in such a way that the nodal points in the TGRV model correspond to points in the finite element model. They have the same number so that there is no possibility of confusion in transferring temperature data from one program to the other.

3.9.1.2.1.1.18 CB&I Program 955 - "MESHPLOT". This program plots input data used for finite element analysis. The program plots the finite element mesh in one of three ways:

without labels, with node labels, or with element labels. The output consists of a listing and a plot. The listing gives all node points with their coordinates and all elements with their node points. The plot is a finite element model with the requested labels.

3.9.1.2.1.1.19 CB&I Program 1028. This program calculates the necessary form factors for the nodes of the model which simulates heat transfer by radiation. Inputs are shape and dimensions of the head-to-skirt knuckle junction. The program is limited to junctions with a toroidal knuckle part.

3.9.1.2.1.1.20 CB&I Program 1038. This program calculates the loads required to satisfy the compatibility between the shroud baffle plate and the jet pump adapters in the RPV.

3.9.1.2.1.2 Reactor Internals. The following computer programs are used in the analysis of the core support structures and other safety-related reactor internals: MASS, SNAP (MULTISHELL), GASP, NOHEAT, FINITE, DYSEA, SHELLS, HEATER, FAP-71, and CREEP-PLAST. Detailed descriptions of these programs are provided in 4.1.

3.9.1.2.2 Nuclear Steam Supply System Piping

3.9.1.2.2.1 Piping Analysis Program/PISYS. PISYS is a computer code specialized for piping load calculations. It utilizes selected stiffness matrices representing standard piping components, which are assembled to form a finite element model of a piping system. The technique relies on dividing the pipe model into several discrete substructures, called pipe elements, which are connected to each other via nodes called pipe joints. It is through these joints that the model interacts with the environment, and loading of the structure becomes possible. PISYS is based on the linear classical elasticity in which the resultant deformation and stresses are proportional to the loading, and the superposition of loading is valid.

PISYS has a full range of static and dynamic analysis options which include distributed weight, thermal expansion, differential support motion modal extraction, response spectra, and time history analysis by modal or direct integration. The PISYS program has been benchmarked against five Nuclear Regulatory Commission piping models for the option-of-response-spectrum analysis and the results are documented in Reference 3.9-2.

3.9.1.2.2.2 Component Analysis/ANSI7. The ANSI7 computer program determines stress and accumulative usage factors in accordance with NB-3600 of the ASME Code, Section III. The program was written to perform stress analysis in accordance with the ASME Code sample problem, and has been verified by reproducing the results of the sample problem analysis.

3.9.1.2.2.3 Relief Valve Discharge Pipe Forces Computer Program/RVFOR. The relief valve discharge pipe connects the relief valve to the suppression pool. When the valve is opened, the transient fluid flow causes time dependent forces to develop in the pipe wall. This computer

program computes the transient fluid mechanics and the resultant pipe forces using the method of characteristics.

3.9.1.2.2.4 Turbine Stop Valve Closure/TSFOR. The TSFOR program computes the time history forcing function in the main steam piping due to turbine stop valve closure. The program utilizes the method of characteristics to compute fluid momentum and pressure loads at each change in pipe section or direction.

3.9.1.2.2.5 Integral Attachment/LUGST. The computer program "LUGST" evaluates the stresses in the pipe wall that are produced by loads applied to the integral attachments.

3.9.1.2.2.6 Piping Dynamic Analysis Program/PDA. The pipe whip analysis was performed using the PDA computer program. PDA is a computer program used to determine the response of a pipe subjected to the thrust force occurring after a pipe break. The program treats the situation in terms of generic pipe break configuration, which involves a straight, uniform pipe fixed at one end and subjected to a time-dependent thrust force at the other end. A typical restraint used to reduce the resulting deformation is also included at a location between the two ends. Nonlinear and time-dependent stress-strain relations are used to model the pipe and the restraint. Similar to the popular elastic-hinge concept, bending of the pipe is assumed to occur only at the fixed end and at the location supported by the restraint.

Shear deformation is also neglected. The pipe bending moment-deflection (or rotation) relation used for these locations is obtained from a static nonlinear cantilever beam analysis. Using moment-rotation relations nonlinear equations of motion are formulated using energy considerations and the equations are numerically integrated in small time steps to yield the time-history of the pipe motion.

3.9.1.2.3 Recirculation Pump

No computer programs were used in the design of the recirculation pumps.

3.9.1.2.4 Emergency Core Cooling System Pumps and Motors

3.9.1.2.4.1 Rotor Assembly Analysis Program/RTRMEC. RTRMEC is a computer program which calculates and displays results of mechanical analysis of motor rotor assembly when acted upon by external forces at any point along shaft (rotating parts only). The shaft deflection due to magnetic and centrifugal forces was analyzed. The calculation for the seismic condition assumes that the motor is operating and that the seismic, magnetic, and centrifugal forces all act simultaneously and in phase on the rotor-shaft assembly. Note that the distributed rotor assembly weight is lumped at the various stations, with the shaft weight at a station being the sum of one-half the weight of the incremental shaft length just before the station, plus one-half the weight of the adjacent incremental shaft length just after the station. Bending and shear effects are accounted for in the calculations.

3.9.1.2.4.2 Structural Analysis Program/SAP4G. SAP4G is used to analyze the structural and functional integrity of the emergency core cooling system (ECCS) pump/motor systems. This is a general structural analysis program for static and dynamic analysis of linear elastic complex structures. The finite element displacement method is used to solve the displacements and stresses of each element of the structure. The structure can be composed of unlimited number of three-dimensional truss, beam, plate, shell, solid, plate strain-plane stress, and spring elements that are axisymmetric. The program can treat thermal and various forms of mechanical loading. The dynamic analysis includes mode superposition, time history, and response spectrum analysis. Seismic loading and time-dependent pressure can be treated. The program is versatile and efficient in analyzing large and complex structural systems. The output contains displacements of each nodal point as well as stresses at the surface of each element.

3.9.1.2.4.3 Effects of Flange Joint Connections/FTFLG01. The flange joints connecting the pump bowl castings are analyzed using FTFLG01. This program uses the local forces and moments determined by SAP4G to perform flat flange calculations in accordance with the rules set forth in Appendix XI, Article XI-3000, and Appendix L of Section III of the ASME Boiler and Pressure Vessel Code.

3.9.1.2.4.4 Structural Analysis of Discharge Head/ANSYS. ANSYS is used to analyze the pump discharge head flange and bolting taking into account the prying action developed by the flat face contact surface. The program is described in detail in Section 3.12.

3.9.1.2.4.5 Beam Element Data Processing/POSUM. POSUM is a computer code designed to process SAP generated beam element data for pump or heat exchanger models. The purpose is to determine the load combination that would produce the maximum stress in a selected beam element. It is intended for use on residual heat removal (RHR) heat exchangers with four nozzles or ECCS pumps with two nozzles.

3.9.1.2.5 Residual Heat Removal Heat Exchangers

3.9.1.2.5.1 Structural Analysis Program/SAP4G. SAP4G is used to analyze the structural and functional integrity of the RHR heat exchangers. The description of this program is provided in Section 3.9.1.2.4.2.

3.9.1.2.5.2 Local Stiffness Calculations/BSTIF01. BSTIF01 is used to estimate the local stiffness of the heat exchanger shell at the attachment point of the supports. The method used in this program is based on the shell stiffness calculations by P. P. Bijlaard as groundwork for Welding Research Council Bulletin 107. The results of BSTIF01 are used to determine equivalent beam properties of the lower and upper heat exchanger support bracket to shell attachments included in the finite element model of the heat exchanger.

3.9.1.2.5.3 Calculation of Shell Attachment Parameters and Coefficients/BILRD.

BILRD is used to calculate the shell attachment parameters and coefficients used in the stress analysis of the support to shell junction. The method, per Welding Research Council Bulletin No. 107, is implemented in BILRD to calculate local membrane stress due to the support reaction loads on the heat exchanger shell.

3.9.1.2.5.4 Beam Element Data Processing/POSUM. POSUM is used to process SAP generated beam element data. The description of this program is provided in Section 3.9.1.2.4.5.

3.9.1.2.6 Dynamic Loads Analysis

3.9.1.2.6.1 Dynamic Analysis Program/DYSEA. DYSEA simulates a beam model in the annulus pressurization dynamic analysis. A detailed description of DYSEA is provided in Section 4.1. DYSEA employs a preprocessor program named GEAPL. GEAPL corrects pressure, time histories into time varying loads, and forcing functions for DYSEA. The overall resultant forces and moments time histories at specified points of resolution can also be obtained from GEAPL.

3.9.1.2.6.2 Acceleration Response Spectrum Program/SPECA. SPECA generates acceleration response spectrum for an arbitrary input time history of piece-wise linear accelerations, i.e., to compute maximum acceleration responses for a series of single-degree-of-freedom systems subjected to the same input. It can accept acceleration time histories from a random file. It also has the capability of generating the broadened/enveloped spectra when the spectral points are generated equally spaced on a logarithmic scale axis of period/frequency. This program is also used in seismic and SRV transient analysis.

3.9.1.2.6.3 Fuel Support Loads Program/SEISM. SEISM02 computes the vertical fuel support loads using the component element methods in dynamics. The methodology is based on the Reference 3.9-3.

3.9.1.2.7 Balance-of-Plant Computer Programs

A list of the principal computer programs used in dynamic and static analyses in the BOP scope is given in Section 3.12. With the exception of the Burns and Roe developed program, these programs are recognized and widely used in the industry with a history of successful applications. The Burns and Roe developed program listed in Section 3.12 is documented, verified, and maintained by Burns and Roe as described in SRP 3.9.1, II2.b.

3.9.1.2.7.1 S/RVDAM4. S/RVDAM4 (Safety/Relief Valve Discharge Analyses Model 4) is a computer model which simulates the transient flow of steam, air, and water in a SRV discharge

line (SRVDL) for a time period of approximately 0.5 sec after SRV opening. The model calculates transient fluid properties, forces, and thermal distributions in the SRVDL.

The piping system is initially filled with air and a water slug at the exit submerged in the suppression pool. Upon SRV actuation, steam enters the line and compresses the air which expels the water slug. The piping system is represented by two models: (a) a gas (steam and air), and (b) a water slug, which are coupled by common pressure and velocity at the air-water interface. The gas flow equations are expressed in finite difference form solved with the method of characteristics. Provision for axial variation in flow area is included. Motion of the water slug is solved with a one-dimensional ordinary differential form of the momentum equation is integrated axially to determine flowrate and displacement.

S/RVDAM4 is based on the analytical model described in the GE Report NEDE-23749-P (Reference 3.9-4) and GE computer code RVFOR04 described in NEDE-24695 (Reference 3.9-5).

Program Version and Computer

Currently S/RVDAM version 4 is being used by Burns and Roe, Inc. in conjunction with a CDC Computer. The system used was CDC 175.

Extent of Application

S/RVDAM4 is a transient piping fluid analysis program which began development in 1975 and is supported by Burns and Roe. It has been used on several in-house projects.

Test Problems

S/RVDAM4 has been benchmarked against problems provided in Reference 3.9-4 and 3.9-5 which have been compared with in-plant test data from Quad Cities, Monticello, and CAORSO boiling water reactor (BWR) plants.

3.9.1.3 Experimental Stress Analysis

When experimental stress analysis is used in lieu of analytical methods for Seismic Category I ASME Code items, the requirements for experimental testing enumerated in the ASME Code which are applicable for the specific components under test shall be applied. When testing is required for Seismic Category I non-ASME Code parts account shall be taken of size effects and dimensional tolerances which exist between the actual part and the test part or parts as well as differences which may exist in the ultimate strength or other governing material properties of the actual part and the tested parts, to ensure that the loads obtained from the test are a realistic or conservative representation of the load carrying capability of the actual structure under the postulated loading.

3.9.1.3.1 Experimental Stress Analysis of Piping Components

The following are the only NSSS components on which experimental stress analysis is used. These components have been tested to verify their design adequacy:

a. Pipe whip restraints, and
b. Snubbers.

Descriptions of the whip restraint and snubber tests are discussed in Sections 3.6 and 3.9.3.4, respectively.

3.9.1.3.2 Orificed Fuel Support, Vertical, and Horizontal Load Tests

The orificed fuel support experimental stress analysis is discussed in Section 3.9.1.4.2.4.

3.9.1.4 Considerations for the Evaluation of Faulted Conditions

All Seismic Category I equipment is evaluated for the faulted loading conditions. However, emergency stress limits rather than faulted stress limits are used in many cases. In all cases, with the exception of the refueling platform, the calculated stresses are within allowable limits. The slight overstress calculated in one member of the refueling platform under the emergency condition (which is greater than the faulted condition in this instance). (See Table 3.9-2s.) This calculated overstress has been judged to be acceptable because of the conservatism in the calculations and because functional use of the equipment is not impaired with the deformation of only one member of the platform. The following paragraphs show examples of the treatment of faulted conditions for the major components on a component by component basis. Additional discussion of faulted analysis can be found in Sections 3.9.3 and 3.9.5 and Table 3.9-2.

Sections 3.9.2.2 and 3.7 discuss the treatment of dynamic loads resulting from the postulated seismic and hydrodynamic events. Section 3.9.2.5 discusses the dynamic analysis of the reactor internals under faulted conditions including additional blowdown forces. Deformations under faulted conditions have been evaluated in critical areas. In all cases the identified design limits, such as clearance limits, are not violated.

3.9.1.4.1 Control Rod Drive System Components

3.9.1.4.1.1 Control Rod Drives. The ASME III Code components of the CRD have been analyzed for faulted conditions. The CRD component which is analyzed for the faulted condition is the indicator tube. The method of analysis and the maximum stresses for this component for various plant operating conditions are given in Table 3.9-2u.

The design adequacy of noncode components of the CRD has been verified by analysis and extensive testing programs on components parts, specially instrumented prototype drives, and production drives. The testing included postulated abnormal events as well as the service life cycle listed in Section 3.9.1.1.1.

3.9.1.4.1.2 Hydraulic Control Unit. The HCU has been qualified by test for upset and faulted conditions. The test response spectra (TRS) for the HCU enveloped the CGS required response spectra (RRS) for all frequencies ranging from 5 Hz to 100 Hz. The CGS unique HCU structural support configuration was considered in this evaluation.

3.9.1.4.1.3 Control Rod Drive Housing. A stress analysis of the CRD housing demonstrated that the calculated stresses were below the allowable stresses for all loading cases. The emergency condition calculated stresses were less severe than the normal and upset conditions. The calculated and allowable stresses at various loading conditions are shown in Table 3.9-2v.

3.9.1.4.2 Standard Reactor Internal Components

3.9.1.4.2.1 Control Rod Guide Tube. The maximum calculated stress on the control rod guide tube occurs at the flange during the faulted conditions. The faulted limit is 2.4 S_m where S_m is 16,000 psi at the design temperature of 575°F per ASME Code Section III, Table I-1.2 and F 1322-1. Table 3.9-2aa shows the calculated stresses are within the allowable limits.

3.9.1.4.2.2 Jet Pump. The elastic analysis for the jet pump faulted conditions shows that the maximum stress occurs at the riser brace and is 54,450 psi. The maximum allowable for this condition per ASME Code Section III, Subsection NG, is 3.6 S_m or 60,480 psi. Table 3.9-2w shows the loads summary.

3.9.1.4.2.3 Low-Pressure Coolant Injection Coupling. The maximum stress during the faulted condition on the low-pressure coolant injection (LPCI) coupling is bounded by the allowable limit of 3.6 S_m. Table 3.9-2y shows that the calculated stresses are within the allowable limits.

3.9.1.4.2.4 Orificed Fuel Support. Due to its complex configuration, a series of vertical and horizontal load tests were performed on the orificed fuel support (OFS) to verify the design. Results from these tests indicate that the component seismic and hydrodynamic loading of the OFS are well below the stress limit allowables with a safety margin of 1.26 for normal and upset and 1.5 for faulted conditions. (The allowable stress limits were arrived at by applying a 0.65 quality factor to the ASME Code allowables of 1.5 S_m for upset and 1.5 x 0.7 S_u for faulted.)

3.9.1.4.3 Reactor Pressure Vessel Assembly

The RPV assembly includes the RPV, support skirt, and shroud support. For the faulted conditions, RPV assembly is evaluated using elastic-analysis methods. For the support skirt and shroud support, buckling is evaluated for the compressive load. Table 3.9-2a shows that the calculated stresses are within the allowable limits.

3.9.1.4.4 Core Structure

The dynamic evaluations for faulted conditions of the core structure are discussed in Section 3.9.5. The calculated and allowable stresses are summarized in Table 3.9-2b.

3.9.1.4.5 Main Steam Isolation, Recirculation Gate, and Safety/Relief Valves

Standard design rules, as defined in ASME Code Section III, are utilized in the analysis of pressure boundary components of Seismic Category I valves. Conventional, elastic stress analysis was used to evaluate components not covered by the ASME Code. The Code allowable stresses were applied to determine acceptability of structure under applicable loading conditions including the faulted condition. Maximum stresses and highest calculated loads are summarized in Tables 3.9-2g, 3.9-2h, and 3.9-2j; and Tables 3.9-2d and 3.9-2e, respectively, for the SRVs, MSIV, and recirculation gate valves.

3.9.1.4.6 Recirculation System Flow Control Valve

The recirculation system flow control valve was analyzed for faulted conditions using the elastic analysis criteria from the ASME Code Section III. The analysis and results for various plant operating conditions are summarized in Tables 3.9-2e and 3.9-2f.

3.9.1.4.7 Main Steam and Recirculation Piping

For main steam and recirculation system piping, elastic analysis methods are used for evaluating faulted loading conditions. The allowable stresses using elastic techniques are obtained from ASME Code Section III, Appendix F, “Rules for Evaluation of Faulted Conditions,” and these are above elastic limits. Additional information on the main steam and recirculation piping is in Tables 3.9-2d and 3.9-2e, respectively.

3.9.1.4.8 Nuclear Steam Supply System Pumps, Heat Exchangers, and Turbine

The recirculation, emergency core cooling system (ECCS), reactor core isolation cooling (RCIC), and standby liquid control (SLC) pumps, residual heat removal (RHR) heat exchangers, and RCIC turbine have been analyzed for the faulted loading conditions identified in Section 3.9.1.1. In all cases, stresses were within the elastic limits. The analytical

methods, stress limits, and allowable stresses are shown in Table 3.9-2 under the respective equipment table.

3.9.1.4.9 Control Rod Drive Housing Supports

The stress criteria, loadings, calculated stresses, and stress limits for faulted condition for the CRD housing supports are shown in Table 3.9-2ac.

3.9.1.4.10 Fuel Storage Racks

The stress criteria, loadings, calculated stresses, and stress limits for the faulted conditions for the new fuel storage racks are shown in Table 3.9-2s.

3.9.1.4.11 Fuel Assembly Including Channels

The BWR fuel assembly design bases and analytical methods including those applicable to the faulted conditions are contained in References 3.9-6, 3.9-8, 3.9-19 and 3.9-21.

3.9.1.4.12 Refueling Equipment

Refueling and servicing equipment (Table 3.9-2s) which is important to safety is classified per the requirements of 10 CFR 50, Appendix A. This equipment, the failure of which is prevented from degrading a safety related component is listed in Table 3.2-1 and is classified to the appropriate Seismic Category. This equipment was subjected to an elastic dynamic finite element analysis to generate loadings. This analysis utilizes appropriate seismic floor response spectra and combines loads at frequencies up to 33 Hz for seismic and 60 Hz for hydrodynamic loads in three directions. Imposed stresses were generated and combined for normal, upset, and faulted conditions. Stresses were compared, depending on the specific safety class of the equipment, to allowables specified in ASME, ANSI, AISC, or other industrial codes and standards. The loading conditions, acceptance criteria, calculated, and allowable stresses are shown in Table 3.9-2s.

3.9.1.4.13 Balance-of-Plant Equipment

With the exception of pipe whip restraint design, the faulted condition was evaluated in accordance with ASME Section III by elastic systems and components analysis. Inelastic stress analysis methods were not utilized for design of any of these components. Pipe whip restraint design is described in Section 3.6.2.

3.9.2 DYNAMIC TESTING AND ANALYSIS

3.9.2.1 Preoperational Vibration and Dynamic Effects Testing on Piping

The test program was divided into three phases: preoperational vibration, startup vibration, and operational transients. See Section 14.2.12.3.17 for a discussion of the piping thermal expansion test program.

The following italicized text is historical information provided in the FSAR to support the application for an operating license. As such, it is not subject to change and therefore has not been verified for accuracy or updated during the FSAR upgrade process per 10 CFR 50.71(e).

3.9.2.1.1 Preoperational Vibration Testing

During the preoperational test phase it is verified that operating vibrations in all safety-related piping systems included in the preoperational test program are within acceptable limits. This phase of the test uses visual observation. If, during the initial system operation, visual observation indicates that piping vibration is significant, measurements are made with a hand-held vibrograph. The results of those measurements will be reviewed by the appropriate engineering group to determine the acceptability of the measured vibration values. If the measured vibration values are not acceptable, appropriate design modifications will be made and the system retested. Visual observations are made during initial operation of all piping systems. During the preoperational test program described in Section 14.2, all safety-related systems with the exception of the main steam, recirculation, RCIC, feedwater, and SRV discharge piping are operated up to rated system flow condition. These remaining piping systems are monitored and/or visually inspected during the startup program. Refer to Sections 3.9.2.1.3 and 14.2.12.3.33.

3.9.2.1.2 Small Attached Piping

During visual observation special attention is given to small attached piping and instrument connections to ensure that they are not in resonance with their associated main process piping. If the operating vibration acceptance criteria are not met, appropriate corrective action will be taken and retesting performed.

3.9.2.1.3 Startup Vibration

The purpose of this phase of the program is to verify that the main steam, recirculation, reactor water cleanup (RWCU), feedwater, RHR, SRV discharge, and RCIC steam piping vibration are within acceptable limits. Because of limited access during power operation caused by high radiation levels, remote monitoring is required for drywell piping systems during this phase of the test. The piping vibration startup test is described in 14.2.12.3.17 and 14.2.12.3.33.

3.9.2.1.4 Operating Transient Loads

The purpose of the operating transient test phase is to verify that pipe stresses are within Code limits. Compliance with the acceptance criteria is the method used to accept the data collected during the transient. Remote vibration and deflection measurements are taken during the following transients:

a. Recirculation pump starts,

b. Recirculation pump trips at 100% of rated flow,

c. Turbine stop valve closure at 75% and 100% power,

d. Manual discharge of each SRV at 1,000 psig and at planned transient tests that result in SRV discharge, e.g., MSIV full isolation,

e. RCIC operation at maximum steam flow,

f. MSIV full isolation,

g. RHR pump starts and trips,

h. Generator load reject at 25% power;

i. Reactor feed pump trip at 100% power, and

j. Recirculation pump transfer to 15 Hz during simulated RPT.

3.9.2.1.5 Test Evaluation and Acceptance Criteria

The piping response to test conditions are considered acceptable if the organization responsible for the stress report reviews the test results and determines that the tests verify that the piping responded in a manner consistent with the predictions of the stress report and/or that the tests verify that piping stresses are within Code limits. To ensure test data integrity and test safety, criteria have been established to facilitate assessment of the test while it is in progress. These criteria, designated Level 1 and 2, are described in the following paragraphs.

For steady-state vibration, the piping peak stress due to vibration only (neglecting pressure) will not exceed 10,000 psi for Level 1 criterion and 5000 psi for Level 2 criterion. These limits are below the piping material fatigue endurance limits as defined in Design Fatigue Curves in Appendix I of ASME Code for 10^6 cycles. The definitions of Level 1 and Level 2 criteria are clarified in the text revision attached.

3.9.2.1.5.1 Level 1 Criterion. Level 1 establishes the maximum limits for the level of pipe motion which, if exceeded, makes a test hold or termination mandatory.

If the Level 1 limit is exceeded, the plant will be placed in a satisfactory hold conditions and the responsible piping design engineer will be advised. Following resolution, applicable tests must be repeated to verify that the requirements of the Level 1 limits are satisfied.

3.9.2.1.5.2 Level 2 Criterion. Level 2 specifies the level of pipe motion which, if exceeded, requires that the responsible piping design engineer be advised. If the Level 2 limit is not satisfied, plant operating and startup testing plans would not necessarily be altered. Investigations of the measurements, criteria, and calculations used to generate the pipe motion limits would be initiated. An acceptable resolution must be reached by all appropriate and involved parties, including the responsible piping design engineer. Depending upon the nature of such resolution, the applicable tests may or may not have to be repeated.

3.9.2.1.6 Corrective Actions

During the course of the tests, the remote measurements are regularly checked to determine compliance with Level 1 criteria. If trends indicate that Level 1 criteria may be violated, the measurements are monitored at more frequent intervals. The test is held or terminated as soon as Level 1 criteria is violated. As soon as possible after the test hold or termination, the following corrective actions will be taken:

a. Installation Inspection. A walkdown of the piping and suspension is made to identify any obstruction or improperly operating suspension components. Snubbers shall be about the midpoint of the total travel range at operating temperature. Hangers shall be in their operating range between hot and cold settings. If vibration exceeds criteria, the source of the excitation must be identified to determine if it is related to equipment failure. Action is taken to correct any discrepancies before repeating the test.

b. Instrumentation Inspection. The instrumentation installation and calibration are checked and any discrepancies corrected. Additional instrumentation is added, if necessary.

c. Repeat Test. If actions (a) and (b) identify discrepancies that could account for failure to meet Level 1 criteria, the test is repeated.

d. Resolution of Findings. If the Level 1 criteria is violated on the repeat test or no relevant discrepancies are identified in (a) and (b), the organization responsible for the stress report shall review the test results and criteria to determine if the test can be safely continued.

If the test measurements indicate failure to meet Level 2 criteria, the following corrective actions are taken after completion of the test:

a. Installation Inspection. A walkdown of the piping and suspension is made to identify any obstruction or improperly operating suspension components. If vibration exceeds criteria, the source of the excitation must be identified to determine if it is related to equipment failure. Action is taken to correct any discrepancies before repeating the test.

b. Instrumentation Inspection. The instrumentation installation and calibration are checked and any discrepancies corrected.

c. Repeat Test. If actions (a) and (b) above identify a malfunction or discrepancy that could account for failure to comply with Level 2 criteria and appropriate corrective action has been taken, the test is repeated.

d. Documentation of Discrepancies. If the test is not repeated, the discrepancies found under actions (a) and (b) above are documented in the test evaluation report and correlated with the test condition. The test is not considered complete until the test results are reconciled with the acceptance criteria.

3.9.2.1.7 Measurement Locations

Remote shock and vibration measurements are made in the three orthogonal directions at appropriate locations on the main steam, recirculation, feedwater, RCIC, and SRV discharge piping. The exact locations are finalized and are documented in the Startup Vibration Test Procedure described in Section 14.2.12.3.33. During preoperational testing prior to fuel load, visual inspection of all safety-related piping is made, and any visible vibration measured with a handheld instrument.

For each of the selected remote measurement locations, Level 1 and 2 deflection and vibration limits are prescribed in the startup test specification. Level 2 limits are based on the results of the stress report adjusted for operating mode and instrument accuracy; Level 1 limits are based on maximum allowable Code stress limits.

3.9.2.2 Seismic and Hydrodynamic Loads Qualification of Safety-Related Mechanical Equipment

This section describes the criteria for dynamic load qualification of mechanical safety-related equipment and also describes the qualification testing and/or analysis applicable to this plant for all the major components on a component by component basis. In some cases, a module or assembly consisting of mechanical and electrical equipment was qualified as a unit; for

example, motor-powered pumps. These modules are generally discussed in this paragraph rather than providing discussion of the separate electrical parts in Section 3.10. Dynamic load qualification testing for pumps is discussed in Section 3.9.3.2. Electrical supporting equipment such as control consoles, cabinets, panels, and valve motor operators is discussed in Section 3.10.

3.9.2.2.1 Test and Analysis Criteria and Methods

The ability of equipment to perform its safety-related function during and after the application of dynamic loads is demonstrated by tests and/or analysis. Selection of testing, analysis, or a combination of the two was determined by the type, size, shape, and complexity of the equipment being considered. When practical, equipment operability is demonstrated by testing; otherwise the operability is demonstrated by mathematical analysis or by a combination of in situ testing and mathematical analysis.

Equipment which is large and/or simple, is usually qualified by analysis or test to show that the loads, stresses, and deflections are less than the allowable maximum. Analysis and/or test is also used to show there are no natural frequencies below 33 Hz for seismic loads and 60 Hz for hydrodynamic loads (see Section 3.7.3.4). If a natural frequency lower than these is discovered, dynamic tests may be conducted and in conjunction with mathematical analysis used to verify operability and structural integrity at the required dynamic input conditions.

When analysis was chosen as the method of qualification, in most cases, the horizontal loads were combined by square-root-of-the-sum-of-the-squares (SRSS) to find the worst-case horizontal load. See References 3.9-10 through 3.9-12 for basis of using SRSS. This load was then applied normal to the weakest axis of the equipment being qualified and the resultant stresses, strains, and deflections were combined with those resulting from the vertical load using absolute sum. The qualifying analysis, in all cases, complied with the intent of Regulatory Guide 1.92.

The response spectra or time history of the attachment point determined by building or piping analysis is used as the input motion in the equipment test or analysis. Equipment is tested in its operational mode and verified during and after the test. The tested equipment is either an exact duplicate of the supplied equipment or is representative of a family of equipment of the same design and structure. See Section 3.10 for details of test input load development.

Valve operability was demonstrated by dynamic tests, application of a static load/stroke test, analysis, or a combination of these methods. The load/stroke test is defined as a test during which a static load, equivalent to the worst-case faulted load in the worst direction, determined by analysis, is applied, in situ, to the extended structure. The valve is stroked before, during, and after the test. The stroke time required in the valve specification must be met on each stroke.

a. Deflection analysis was used to demonstrate operability for valves whose mechanism for becoming inoperable is known to be metal-to-metal contact between moving parts. In such cases the analytically determined clearance between the critical moving parts must be greater than the manufacturer's design clearance with margin when the worst-case dynamic plus operational load is applied. Valves of the same type, which could not meet these analytic criteria, successfully passed the in situ load/stroke test;

b. Valves whose body and operator are supported rigidly to the same structure did not require operability under the load to be demonstrated;

c. Operability under worst-case dynamic plus operational loads was demonstrated for the following three valves by demonstrating similarity to successfully tested valves;

1. HPCS-V-23 is qualified by similarity to tested valve HPCS-V-11, both of which are Anchor-Darling 900-lb globe valves with identical materials. The yokes that are the critical structural elements have the same cross section. HPCS-V-11 is a 10-in. valve while HPCS-V-23 is a 12-in. valve. The tested valve is equipped with a Limitorque model SMB-3 (150) operator (weight 1150 lb) while the valve being qualified is equipped with a SMB-4 (150) operator (weight 1765 lb). The larger SMB-4 is less likely to become stalled during a dynamic event. The test load applied was the equivalent of a 2.5g load to the larger operator. The required load to demonstrate operability during a faulted event is 2.5g.

2. Valve HPCS-V-1 is qualified based on its similarity to HPCS-V-15. Both are Anchor-Darling 150-lb gate valves of the same type, made of identical materials. HPCS-V-15 is an 18-in. valve equipped with a Limitorque SB-2-60 operator, while HPCS-V-1 is a 14-in. valve equipped with an SMB-00-25 operator. A deflection analysis was performed showing that the tested valve (HPCS-V-15) had less clearance between moving parts during its test than the valve being qualified (HPCS-V-1) would have during a postulated faulted event.

3. Valve CRD-V-10 is qualified based on its similarity to CRD-V-11. Both valves are manufactured by I.T.T. Hammel-Dahl of the same design. Both are 600-lb fail-closed-gate valves with pneumatic operators of the same type. The faulted load on each is approximately 1g. Valve CRD-V-11 was statically tested at 1.6g. Structural analysis of the two valve assemblies shows that no yielding occurs for loads up to 6g in any direction and that the tested valve (CRD-V-11) is stressed to a higher

level and deflects more than the valve being qualified (CRD-V-10) by similarity for any applied acceleration.

Natural frequency may be determined by running a continuous sweep frequency search using a sinusoidal steady-state input of low magnitude, a hammer blow Fourier transform in situ test or analysis.

The equipment being dynamically tested is mounted on a fixture which simulates the intended service mounting and causes no dynamic coupling to the equipment.

3.9.2.2.1.1 Random Vibration Input. See Section 3.10.

3.9.2.2.1.2 Application of Input Motion. See Section 3.10 for test input motion.

3.9.2.2.1.3 Fixture Design. The fixture design simulates the actual service mounting and causes no dynamic coupling to the equipment.

3.9.2.2.1.4 Prototype Testing. Some equipment testing is conducted on prototypes of the equipment installed in this plant.

3.9.2.2.2 Seismic and Hydrodynamic Load Qualification of Specific Nuclear Steam Supply System Mechanical Components

The following sections discuss the testing or analytical qualification of NSSS equipment. Dynamic qualification is also described in Sections 3.9.1.4, 3.9.3.1, and 3.9.3.2.

3.9.2.2.2.1 Jet Pumps. A dynamic analysis of the jet pumps was performed and the resulting stresses were below the design allowable.

3.9.2.2.2.2 Control Rod Drive and Control Rod Drive Housing. The dynamic qualification of the CRD housing (with enclosed CRD) was done analytically and the stress results of these analysis established the structural integrity of these components. Dynamic tests have been conducted to verify the operability of the CRD during seismic and hydrodynamic events. A simulated test imposing a static bow in the fuel channels was performed with the CRD functioning satisfactorily.

3.9.2.2.2.3 Core Support (Orificed Fuel Support and Control Rod Guide Tube). A detailed analysis imposing dynamic effects due to seismic and hydrodynamic events has shown that the maximum stresses developed during these events are much lower than the maximum allowed for the component material.

3.9.2.2.2.4 Hydraulic Control Unit. The HCU was evaluated by comparing the floor response spectra with the maximum HCU capability as determined by test and analysis.

3.9.2.2.2.5 Fuel Assembly Including Channels. General Electric initial core BWR fuel channel design bases, analytical methods, and evaluation results, including seismic and loss-of-coolant accident (LOCA) consideration, are contained in References 3.9-6 and 3.9-7. The Global Nuclear Fuel reload fuel design bases are contained in Reference 3.9-22.

3.9.2.2.2.6 Recirculation Pump and Motor Assembly. Calculations were made to ensure that the recirculation pump and motor assembly is designed to withstand the specific static equivalent seismic and hydrodynamic loads. The flooded assembly was analyzed from the brackets on the motor-mounting member with snubbers attached to brackets located on the pump case and the top of the motor frame.

Primary stresses due to horizontal and vertical seismic and hydrodynamic forces were considered to act simultaneously and are conservatively added directly. Horizontal and vertical seismic and hydrodynamic forces were applied to mass centers and equilibrium reactions determined for motor and pump brackets.

3.9.2.2.2.7 Emergency Core Cooling System Pumps and Motors Assembly.
A three-dimensional finite element model of each ECCS pump/motor assembly and its supports was developed and dynamically analyzed using the response spectrum method to verify that the pump/motor assemblies could withstand seismic and hydrodynamic loadings. The same model was statically analyzed to evaluate the effect of the external piping loads and dead weight to ensure that nozzle load criteria and stress limits were met. Critical location stresses were evaluated and compared with the allowable stress criteria. The results of the analysis demonstrated that the stresses at all investigated locations were less than their corresponding allowable values.

3.9.2.2.2.8 Reactor Core Isolation Cooling Pump Assembly. The RCIC pump assembly is safety-related mechanical equipment and dynamic qualification for an active safety function has been provided.

3.9.2.2.2.9 Reactor Core Isolation Cooling Turbine Assembly. The RCIC turbine assembly is safety related. The turbine and subcomponents have been dynamically qualified by testing and analysis.

3.9.2.2.2.10 Standby Liquid Control Pump and Motor Assembly. The SLC pump and motor are not considered safety related (see Section 7.4). The equipment has been analyzed for seismic loads.

3.9.2.2.2.11 Residual Heat Removal Heat Exchangers. A three-dimensional finite element model of the RHR heat exchanger and its support was developed and analyzed using the

response spectrum method to verify that the heat exchanger can withstand seismic and hydrodynamic loads. The same model was statically analyzed to evaluate the effect of the external piping loads and dead weight to ensure that the nozzle load criteria and stress limits were met. Critical location stresses were evaluated and found to be lower than the corresponding allowable values.

3.9.2.2.2.12 Standby Liquid Control Tank. The SLC tank is not considered safety related (see Section 7.4). The tank has been analyzed for seismic loads.

3.9.2.2.2.13 Main Steam Isolation Valves. The MSIV structures were analyzed and representative models statically tested to demonstrate operability at the specified faulted conditions. Static testing consisted of mechanically loading the extended mass of the valve actuator to equivalent seismic loading while valve closure was performed. Operation of the valve was demonstrated by this test.

3.9.2.2.2.14 Main Steam Safety/Relief Valves. Due to the complexity of this structure and the performance requirements of the valve, the total assembly of the SRV (including electrical, pneumatic devices) was dynamically tested at dynamic accelerations equal to or greater than the combined SSE and hydrodynamic loading determined for this plant. Satisfactory operation of the valves was demonstrated during and after the test.

3.9.2.2.2.15 Fuel Pool Cooling and Cleanup System. The cooling portion of the fuel pool cooling and cleanup (FPC) system is Seismic Category I (see Section 9.1.3). In addition, an interconnection with the standby service water (SW) system will ensure the availability of safety-grade makeup and cooling water in the event that the normal source of makeup and cooling water from the RCC system is unavailable.

The cleanup portion of the system is of Seismic Category II design. It will be isolated from the cooling portion of the system by Seismic Category I valves in the event of its unavailability (see Section 9.1.3.1).

3.9.2.2.3 Balance-of-Plant Safety-Related Mechanical Equipment

Balance-of-plant Seismic Category I equipment, components, and accessories were designed based on results determined analytically (see Section 3.9.2.2) or through dynamic testing. The dynamic program is performed to confirm the ability of the equipment to function as needed during and after an earthquake of magnitude up to and including the SSE. These test programs implement the criteria stated in Sections 3.9.2.2.1 through 3.9.2.2.1.4. The dynamic tests met the seismic loading requirements as defined by the applicable floor response spectrum curves for the appropriate damping coefficients.

3.9.2.2.4 Suppression Pool Hydrodynamic Loads Qualification of Safety-Related Equipment

Suppression pool hydrodynamic loads due to postulated intermediate break accident (IBA), design basis accident (DBA), SRV, SRV(X), SRV(ADS), and SRV(ALL) events were developed for Columbia Generating Station, and are discussed in Appendix 3A. The SRV building responses are appropriately combined with OBE, SSE, IBA, and DBA building responses to provide the basis for evaluating acceptability of Class 1E electrical and safety-related mechanical equipment originally qualified to seismic only dynamic loading. Detailed reevaluation of each component of Seismic Category I equipment was not performed wherever direct comparison of original qualification RRS with new seismic plus hydrodynamic RRS demonstrates satisfactory qualification of the equipment. When such comparisons could not be made, other means of evaluating the original qualification against the new dynamic load combinations were used. In regard to the load combination SRV (1) + SSE + DBA, plant design adequacy assessments for Class 1E electrical and safety-related mechanical equipment were performed using the generic basis established by the BWR Mark II Owner's Group for this load combination.

Each of these analyses complied with the intent of Regulatory Guide 1.92.

3.9.2.3 Dynamic Response of Reactor Internals Under Operational Flow Transients and Steady-State Conditions

The major reactor internal components within the vessel were subjected to extensive testing coupled with dynamic system analyses to properly describe the resulting flow-induced vibration phenomena incurred from normal reactor operation and from anticipated operational transients.

In general, the vibration forcing functions for operational flow transients and steady-state conditions are not predetermined by detailed analysis. Special analyses of the response signals measured for reactor internals of many similar designs are performed to obtain the parameters which determine the amplitudes and modal contributions in the vibration responses. These studies provide useful predictive information for extrapolating the results from tests of components with similar designs to components of different design.

This vibration prediction method is appropriate where standard hydrodynamic theory cannot be applied due to complexity of the structure and flow conditions. Elements of the vibration prediction method are outlined as follows:

a. Dynamic analysis of major components and subassemblies is performed to identify natural vibration modes and frequencies. The analytical models used for Seismic Category I structures are similar to those outlined in Section 3.7.2;

b. Data from previous plant vibration measurements is assembled and examined to identify predominant vibration response modes of major components. In general, response modes are similar but response amplitudes vary among BWRs of differing size and design;

c. Parameters are identified which are expected to influence vibration response amplitudes among the several reference plants. These include hydraulic parameters such as velocity and steam flow rates and structural parameters such as natural frequency and significant dimensions;

d. Correlation functions of the variable parameters are developed which, multiplied by response amplitudes, tend to minimize the statistical variability between plants. A correlation function is obtained for each major component and response mode; and

e. Predicted vibration amplitudes for components of the prototype plant are obtained from these correlation functions, based on applicable values of the parameters for the prototype plant. The predicted amplitude for each dominant response mode is stated in terms of a range, taking into account the degree of statistical variability in each of the correlations. The predicted mode and frequency are obtained from the dynamic analyses of paragraph (a) above.

The dynamic modal analyses also form the basis for interpretation of the prototype plant preoperational and initial startup test results (see Section 3.9.2.4). Modal stresses are calculated and relationships are obtained between sensor response amplitudes and peak component stresses for each of the lower normal modes. The allowable amplitude in each mode is that which produces a peak stress amplitude of +10,000 psi.

3.9.2.4 Confirmatory Flow-Induced Vibration Testing of Reactor Internals

Reactor internals for CGS are substantially the same as the internals design configurations which have been tested in prototype BWR/4 plants. The only exception is the jet pumps which are of the BWR/5 design. A vibration measurement and inspection program was conducted in the Tokai-2 plant to verify the design of the jet pumps with respect to vibration.

A comprehensive vibration assessment of BWR/4 and BWR/5 internals is presented in a licensing topical report (Reference 3.9-9). This report also contains additional information on the jet pump vibration measurement and inspection programs performed in the Tokai-2 plant.

The CGS reactor internals were tested in accordance with provisions of Regulatory Guide 1.20, Revision 2, for nonprototype Category IV plants using Tokai-2 as the limited valid prototype. The test procedure involves taking vibration measurements to determine the vibration characteristics of reactor vessel internals during the initial approach to full power operation.

Vibratory responses are recorded at various power levels and recirculation flow rates using accelerometers on the shroud head assembly and strain gauges on two selected jet pump riser pipe braces.

3.9.2.5 Dynamic System Analysis of the Reactor Internals Under Faulted Conditions

To ensure that no significant dynamic amplification of load occurs as a result of the oscillatory nature of the blowdown forces, a comparison is made of the periods of the applied forces and the natural periods of the core support structures being acted on by the applied forces. These periods are determined from a 12-node vertical dynamic model of the RPV and internals. Only motion in the vertical direction is considered here; hence, each structural member (between two mass points) can only have an axial load. Besides the real masses of the RPV and core support structures, account is made for the water inside the RPV.

The time varying pressures were applied to the dynamic model of the reactor internals described above. Except for the nature and locations of the forcing functions and the dynamic model, the dynamic analysis method is identical to that described for seismic analysis and is detailed in Section 3.7.2.1. The pressure dynamic loads were combined with other dynamic loads (including seismic and hydrodynamic) by the SRSS method. The resultant force was then combined with other steady-state and static loads on an absolute sum basis to determine the design load.

The results of the dynamic analysis of the reactor internals are summarized in Table 3.9-2b.

3.9.2.6 Correlations of Reactor Internals Vibration Tests With the Analytical Results

Prior to initiation of the instrumented vibration test program for the prototype plant (Tokai-2), extensive dynamic analyses of the reactor and internals were performed. The results of these analyses were used to generate the allowable vibration levels during the vibration test. The vibration data obtained during the test are always analyzed in detail. The results of the data analysis, vibration amplitudes, natural frequencies, and mode shapes are then compared to those obtained from the theoretical analysis.

Such comparisons provide insight into the dynamic behavior to the reactor internals. The additional knowledge gained is utilized in the generation of the dynamic models for seismic and LOCA analyses for this plant. The models used for this plant are the same as those used for the vibration analysis of the prototype plant (Tokai-2).

The flow vibration test data are supplemented by data from forced oscillation tests of reactor internal components to provide the analysts with additional information concerning the dynamic behavior of the reactor internals.

3.9.3 ASME CODE CLASS 1, 2, AND 3 COMPONENTS, COMPONENT SUPPORTS, AND CORE SUPPORT STRUCTURES

3.9.3.1 Loading Combinations, Design Transients, and Stress Limits

This section delineates the criteria for selection and definition of design limits and loading combinations associated with normal operation, postulated accidents, and specified seismic and hydrodynamic events for the design of safety-related ASME Code components (except containment components which are discussed in Section 3.8).

When two or more dynamic loads (seismic, LOCA, SRV discharge, etc.) are included in the load combination, responses to individual dynamic loads may be combined by the SRSS method. The basis for this is provided in References 3.9-10 through 3.9-12.

This section also lists the major ASME Class 1, 2, and 3 equipment and associated pressure retaining parts on a component-by-component basis and identifies the applicable loadings, calculation methods, calculated stresses, and allowable stresses. Design transients for ASME Class 1 equipment are discussed in Section 3.9.1.1. Dynamic related loads are discussed in Sections 3.7 and 3.9.2.2.

Table 3.9-2 is the major part of this section. It presents the loading combination, analytical methods (by reference or example) and the calculated stress, or other design values, for the most critical areas in the ASME design of each component applicable to all ASME Code Class 1, 2, and 3 components, component supports, and core support structures.

3.9.3.1.1 Plant Conditions

Events that the plant might credibly experience during the plant life are evaluated to establish a design basis for plant equipment. These events are divided into four plant conditions. The plant conditions described in the following paragraphs are based on event probability (i.e., frequency of occurrence) and correlated design conditions defined in the ASME Code Section III. The current ASME code designations for these design conditions are given in parentheses.

3.9.3.1.1.1 Normal Condition (Level A). Normal conditions are any conditions in the course of system startup, operation in the design power range, normal hot standby (with condenser available), and system shutdown other than upset, emergency, faulted, or testing.

3.9.3.1.1.2 Upset Condition (Level B). Any deviations from normal conditions anticipated to occur often enough that design should include a capability to withstand the conditions without operational impairment. The upset conditions include those transients that result from any single operator error or control malfunction, transients caused by a fault in a system component

requiring its isolation from the system, and transients due to loss of load or power or an OBE. Hot standby with the main condenser isolated is an upset condition.

3.9.3.1.1.3 Emergency Condition (Level C). Those deviations from normal conditions that require shutdown for correction of the conditions or repair of damage in the reactor coolant pressure boundary (RCPB). The conditions have a low probability of occurrence but are included to provide assurance that no gross loss of structural integrity will result as a concomitant effect of any damage developed in the system. Emergency condition events include but are not limited to transients caused by one of the following: a multiple valve blowdown of the reactor vessel; loss of reactor coolant from a small break or crack which does not depressurize the reactor system nor result in leakage beyond normal makeup system capacity, but which requires the safety functions of isolation of containment, and reactor shutdown; improper assembly of the core during refueling; and vibration motions of an OBE in combination with associated system transients.

3.9.3.1.1.4 Faulted Condition (Level D). Those combinations of conditions associated with extremely low probability, postulated events whose consequences are such that the integrity and operability of the system may be impaired to the extent that considerations of public health and safety are involved. Faulted conditions encompass events that are postulated because their consequences would include the potential for the release of significant amounts of radioactive material. These postulated events are the most drastic that must be designed against and thus represent limiting design bases. Faulted condition events include, but are not limited to one of the following: a control rod drop accident, a fuel handling accident, a main steam line break, a recirculation loop break, the combination of small break accident/large break accident dynamic motion associated with an SSE and hydrodynamic loads plus a loss of offsite power or the SSE.

3.9.3.1.1.5 Correlation of Plant Conditions with Event Probability. The probability of an event occurring per reactor year associated with the plant conditions is listed below. This correlation can be used to identify the appropriate plant condition for any hypothesized event or sequence of events.

Plant Conditions	Event Encountered Probability Per Reactor Year
Normal (planned)	1.0
Upset (moderate probability)	$1.0 \text{ P } 10^{-2}$
Emergency (low probability)	$10^{-2} \text{ P } 10^{-4}$
Faulted (extremely low probability)	$10^{-4} \text{ P } 10^{-6}$

3.9.3.1.1.6 Safety Class Functional Criteria. For any normal or upset design condition event, Safety Class 1, 2, and 3 equipment shall be capable of accomplishing its safety functions as required by the event and shall incur no permanent changes that could deteriorate its ability to accomplish its safety functions as required by any subsequent design condition event.

For any emergency or faulted design condition event, Safety Class 1, 2, and 3 equipment shall be capable of accomplishing its safety functions as required by the event, but repairs could be required to ensure its ability to accomplish its safety functions as required by any subsequent design condition event.

3.9.3.1.1.7 Compliance with Regulatory Guide 1.48. Regulatory Guide 1.48 delineates acceptable design limits and appropriate combinations of loadings associated with normal operation, postulated accidents, and specified seismic events for the design of Seismic Category I fluid system components (i.e., water and steam containing components). This guide is applicable to the ASME Code Section III, Class 1, 2, and 3 components, such as vessels, piping, pumps, and valves designed to Seismic Category I conditions with particular emphasis on active pumps and valves to ensure operability. A comparison between the design limits and load combinations required by Regulatory Guide 1.48 and those utilized by CGS for vessels, piping, and active and nonactive pumps and valves shows that compliance with the regulatory guide is satisfied for both NSSS and BOP components.

The state of compliance with the requirements of Regulatory Guide 1.48 for ASME Code Section III, Class 1, components is summarized as follows:

a. Piping design acceptance is based on satisfying the load combinations and stress intensity limits for normal and upset, emergency, and faulted conditions of the ASME Code and is thus in accordance with the requirements of Regulatory Guide 1.48. The loadings include various combinations of pressure, temperature, seismic, and hydrodynamic plant unique inertial and displacement loads developed for CGS. The hydrodynamic events include chugging, pool swell, annulus pressurization, and SRV actuations. For each plant condition the worst-case loading combination is applied and the piping evaluated for satisfaction of the applicable ASME Code allowables. In addition, essential piping is evaluated for functional capability per the rules of NUREG/CR-0261 or for NSSS piping (GE scope of supply) NEDO-21985;

b. Similar to piping, ASME Code Class 1 vessels and nonactive pumps and valves are designed and accepted per the applicable stress allowables of Section III of the ASME Code. The load combinations include pressure, temperature, seismic, and hydrodynamic events. The Regulatory Guide 1.48 cited ASME Code requirements are satisfied for all loading conditions;

c. Compliance with Regulatory Guide 1.48 for active Class 1 pumps is not required since no such pumps are included in the design of CGS;

d. The primary basis for demonstration of operability and satisfaction of Regulatory Guide 1.48 for active Class 1 valves at CGS is provided by means of analysis and/or test. Dynamic analyses of the piping system under building seismic and hydrodynamic loads are performed to obtain the enveloped (or maximum) valve acceleration response. Flexibility of the valve and its operator is also examined to establish the absolute maximum response. These acceleration responses are then compared to safe acceleration limits established by vibratory testing of the subject valve or a representative class of valves. In those cases where operability of valves is demonstrated by analysis, deflections, or deformation of critical valve components under the maximum calculated accelerations (forces) are examined and shown not to impair valve function. Where test data and/or analyses fail to conclusively show valve operability, in situ testing of the valve is completed. These tests include frequency response measurements and/or operational proof tests of the valve under static loading of the valve operator such that maximum dynamic loads are simulated. All CGS pressure retaining safety-related valves are designed for normal as well as plant accident condition loads using either the standard or the alternate design rules of ASME Code Section III;

CGS MSIVs and SRVs have undergone extensive analysis and testing to demonstrate operability and Regulatory Guide 1.48 compliance. The MSIVs are modeled into the piping analysis where thermal, pressure, seismic, steam hammer, and hydrodynamic loads are imposed on the valves in the assessment of ASME Code compliance. In addition, the MSIVs operability following a downstream line break was demonstrated by the "Static Line Test" as defined in the GE report APED-5750 (March 1969). Later tests involved application of hydrodynamic loads in the valves' operability qualification.

The SRV valves are qualified by test for operability during a combined seismic and hydrodynamic load event. Structural integrity of the SRVs during a dynamic event is demonstrated by both ASME Code compliance and test. A dynamic qualification test (shake table) which applied moment and shear loads greater than the required design limit loads was completed to demonstrate SRV operability.

The state of compliance with the requirements of Regulatory Guide 1.48 for ASME Code Section III, Class 2 and 3 piping, vessels, pumps, and valves is demonstrated in a program analogous to the Class 1 component evaluations. The applied stress limits comply with the ASME Code Class 2 and 3 allowables and meet the requirements of Regulatory Guide 1.48 for

all plant conditions. Piping functional capability assessment of essential systems are completed according to the rules for Class 2 piping defined by NUREG/CR-0261.

All active ECCS pumps are qualified for operability by first being subject to rigid tests before and after installation in the plant. These tests include hydrostatic pressure, seal leakage, flow, thermal response, and vibration monitoring of these pumps under full load. Similar ECCS pump motors were dynamically tested operating at full load under the combined seismic and abnormal environmental conditions existing during and after a LOCA. Detailed analyses of the pump structure under piping reaction and building inertial (seismic/hydrodynamic) loads have been completed to further assess operability and ASME Code compliance.

Engineered safety feature (ESF) pumps (other than ECCS) are designed to the appropriate section of the ASME Code using conservatively derived loads for both normal and accident condition events. The ESF pump designs for operability are based on analytical results or appropriate dynamic testing to meet the seismic loading requirements as defined by the applicable floor response spectrum.

Except for stress limits and application of hydrodynamic loads (which may not be applicable outside the first piping anchor external to primary containment), Regulatory Guide 1.48 compliance for active and nonactive Class 2 and 3 valves was completed using the programmatic procedures instituted for Class 1 valves.

The design limits for BOP Class 1 components and for all Class 2 and 3 components are based on the stress criteria outlined in the ASME Code. The ASME criteria established allowable stresses for these components under all design load combinations. Table 3.9-2 defines the loading combinations and stress limits for NSSS and BOP components. Tables 3.9-3 and 3.9-4 show the load and stress criteria for ASME Code Class 1, 2, and 3 components.

3.9.3.1.2 Reactor Pressure Vessel Assembly

The reactor vessel assembly consists of the RPV, vessel support skirt, and shroud support. The shroud support consists of the shroud support plate, the shroud support cylinder, and its legs. The RPV is an ASME Class 1 component constructed to the requirements of the Summer 1971 Section III Code. The Summer 1971 Code did not include requirements for supports or for vessel internals. A complete stress report on the RPV has been prepared in accordance with ASME requirements. Table 3.9-2a provides a summary of the stress criteria, load combinations, calculated stresses, and allowable stresses, including the effects of hydrodynamic loads. The stress analysis performed for the reactor vessel assembly (including the faulted condition) was completed using elastic methods. Loading conditions, design stress limits, and methods of stress analysis for the core support structures and other reactor internals are discussed in Section 3.9.5.

3.9.3.1.3 Main Steam Piping

The main steam piping discussed in this paragraph includes that piping extending from the RPV to the outboard MSIV. This piping is designed in accordance with the ASME Code Section III, Subarticle NB-3600. The loading conditions, stress criteria, calculated stresses, and allowable stresses are summarized in Table 3.9-2d.

The rules contained in Appendix F of ASME Code Section III were used in evaluating faulted loading conditions independently of all other design and operating conditions. Stresses calculated on an elastic basis are evaluated in accordance with paragraph F-1360.

3.9.3.1.4 Recirculation Loop Piping

This section discusses the recirculation system piping which is bounded by the RPV nozzles. This piping is designed in accordance with the ASME Code Section III, Subarticle NB-3600. The loading conditions, stress criteria, calculated stresses, and allowable stresses are summarized in Table 3.9-2e.

The rules contained in Appendix F of ASME Code Section III were used in evaluating faulted loading conditions, independently of all other design and operating conditions. Stresses calculated on an elastic basis are evaluated in accordance with paragraph F-1360.

3.9.3.1.5 Recirculation System Valves

The recirculation system flow control (kept in a mechanically blocked full open position) and suction and discharge gate valves are designed in accordance with the ASME Code Section III, Class 1, Subarticle NB-3500. The discharge gate valve is required to close for LPCI flow injection. Loading combinations and other stress analysis information are presented in Tables 3.9-2f and 3.9-2j.

3.9.3.1.6 Recirculation Pump

All pump parts that are subject to reactor system water pressure comply with ASME Code Section III, 1971 Edition for Class 1 components.

In the design of the recirculation pumps, the ASME Code Section VIII, Division 1, was used as a guide in calculations made for determining the thickness of pressure retaining parts and in sizing the pressure retaining bolting.

The pump vendor made calculations for the design of the pressure containing components to include the determination of minimum wall thickness, allowable stress, and pressures. The loading conditions and other stress analysis information are presented in Table 3.9-2i.

Load, shear, and moment diagrams were constructed to scale using live loads, dead loads, and calculated snubber reactions. Combined bending, tension, and shear stresses were determined for each major component of the assembly, including the pump driver mount, motor flange bolting, and pump case.

The maximum combined tensile stress in the cover bolting was calculated using tensile stress from design pressure.

Combined primary stresses did not exceed the code allowable stress shown in ASME Code Section VIII, 1971 Edition. For the faulted condition (SSE), the maximum stress was limited to 1.5 S_m. This limit is conservative since 1.5 $S_m \cong 0.5\ S_u$ (S_u is the ultimate strength). The code allows 0.7 S_u for the faulted condition. These methods and calculations demonstrate that the pump will maintain pressure integrity at all times.

3.9.3.1.7 Standby Liquid Control Tank

The SLC tank is designed in accordance with ASME Code Section III. A summary of the design calculations and stress criteria used is shown in Table 3.9-2m.

3.9.3.1.8 Residual Heat Removal Heat Exchangers

The RHR heat exchanger is designed in accordance with the ASME Code Section III. The loading combinations considered and stress analysis for the RHR heat exchangers are presented in Table 3.9-2o.

3.9.3.1.9 Reactor Core Isolation Cooling Turbine

Although not under the jurisdiction of the ASME Code, the RCIC turbine has been designed and fabricated following the basic guidelines of ASME Code Section III for Class 2 components.

3.9.3.1.10 Reactor Core Isolation Cooling Pump

The RCIC pump has been designed and fabricated to the requirements of the 1971 Edition, Winter 1971 Addenda of the ASME Code Section III as a Class 2 component.

Table 3.9-2r contains a summary of the RCIC pump loading conditions, stress criteria, calculated stresses, and the allowable stresses.

3.9.3.1.11 Emergency Core Cooling System Pumps

The RHR, low-pressure core spray (LPCS), and high-pressure core spray (HPCS) pumps are designed in accordance with ASME Code Section III. The stress analysis methods, calculated stresses, and allowable limits for the ECCS pumps are provided in Table 3.9-2n.

3.9.3.1.12 Standby Liquid Control Pump

The SLC pump has been designed and fabricated following the requirements for an ASME Code Section III, Class 2 component. Table 3.9-2L contains a summary of the SLC pump loading conditions, stress criteria, calculated stresses, and the allowable stress limits.

3.9.3.1.13 Safety/Relief Valves and Main Steam Isolation Valves

The SRVs and MSIVs are designed in accordance with the requirements of ASME Code Section III, Subarticle NB-3500, Class 1 components.

Loading combinations, analytical methods, calculated stresses, and allowable limits are shown for the SRVs and MSIVs in Tables 3.9-2g and 3.9-2h, respectively.

3.9.3.1.14 Safety/Relief Valve Discharge Piping

3.9.3.1.14.1 Main Steam Safety/Relief Valve Piping. This piping is designed in accordance with the ASME Code Section III, Subsection ND for Class 3 piping within the drywell and Subsection NC for Class 2 piping within the suppression chamber. The load combinations and allowables are shown in Table 3.9-4. The main steam SRVs relieve to closed discharge systems; therefore, Regulatory Guide 1.57 is not applicable.

3.9.3.1.14.2 Residual Heat Removal Suction Shutdown Thermal Relief Valve Piping. The discharge piping for the thermal relief valve on the RHR system relieves into the containment suppression pool. It is designed in accordance with ASME Code Section III for Class 2 piping and is Seismic Category I supported. However, due to the very small discharged quantities of fluid required to relieve pressure the intent of Regulatory Guide 1.67 is not considered applicable. See Section 1.8.2.

3.9.3.1.15 Reactor Water Cleanup System Pump and Heat Exchangers

The RWCU pump and regenerative and nonregenerative heat exchangers are not part of a safety system and are not designed to Seismic Category I requirements.

The requirements of ASME Code Section III, Class 3, components were used in evaluating the RWCU system pump and heat exchanger components. The loading conditions, stress criteria,

calculated stress, and allowable stresses for the RWCU pumps are summarized in Table 3.9-2p.

3.9.3.1.16 Fuel Pool Cooling and Cleanup System Heat Exchangers and Pumps

The cooling portion of the FPC system has been analyzed to Seismic Category I requirements.

The FPC heat exchanger design has been analyzed by performing a response spectrum dynamic analysis for seismic loads. The model used to represent the heat exchangers utilized finite element and ANSYS programs to perform the detailed calculations. For certain subcomponents such as the tube bundle, hand calculations were performed to determine the natural frequency. The corresponding acceleration coefficients were then used to calculate the stress in these subcomponents.

The piping in the cooling portion of the system has been analyzed to Seismic Category I requirements utilizing the ADLPIPE computer program. Existing manually operated valves have been upgraded by the manufacturer to comply with Seismic Category I requirements. Additional and replacement valves have been purchased to Seismic Category I, Quality Class 1 requirements.

The cleanup portion of the system is not safety related and is designed to Seismic Category II requirements as defined in Section 3.2.1. Seismic Category I isolation valves automatically isolate the portion of the system on low fuel pool water level. Following a seismic occurrence it can be manually isolated if necessary.

3.9.3.1.17 Control Rod Drive Piping

The safety-related portion of the CRD piping is designed in accordance with the ASME Code Section III, Subsection NB for Class 1 piping and NC for Class 2 piping. The criteria and load combinations are shown in Table 3.9-3 for Class 1 piping and Table 3.9-4 for Class 2 piping.

The remainder of the CRD piping, which is not safety related, is designed in accordance with ANSI B31.1.

3.9.3.1.18 Balance-of-Plant Piping

Safety associated piping is classified as Seismic Category I. The code class of such piping is ASME Code Class 1, 2, or 3.

3.9.3.1.18.1 Criteria and Results. For ASME Code Class 1, the loading combinations, appropriate design criteria, and applicable allowable stresses are presented in Tables 3.9-2 and 3.9-3, respectively. Procedures used to evaluate stresses and stress indices in ASME Class 1

piping at integral attachments shall reference the applicable ASME Code Case. Calculated stresses and fatigue usage factors for these systems are documented in the applicable stress reports. These values are within the allowable limits shown in Table 3.9-3. The design of 1 in. and under ASME Class 1 piping is performed to Subsection NC rules in accordance with NB-3630.

For ASME Code Classes 2 and 3, the loading combinations, appropriate criteria, and applicable allowable stresses are presented in Tables 3.9-2 and 3.9-4. Actual calculated stresses for these systems are within the allowables given in Table 3.9-4 and are documented in piping stress calculations.

3.9.3.1.18.2 Method of Analysis. The pipe stress analyses and fatigue analyses are performed using computer programs listed in Section 3.12. Stresses due to seismic loading are evaluated by use of multimass, multispring analytical models, in conjunction with seismic shock response spectra. Other dynamic effects when applicable are also considered in the calculation by performance of dynamic analysis, using the appropriate shock response spectra or time-history loading.

3.9.3.1.18.3 Seismic Loading. For Seismic Category I piping, the procedure of combining the effect of the three components of earthquake motion is discussed in Section 3.7.2.6.

Internal moments and forces derived from the seismic responses of the piping system are combined with loads from deadweight, pressure, thermal, and other mechanical loads to complete the stress analysis of all Seismic Category I and some Seismic Category II piping. For ASME Class 1 piping, stress indices and cumulative usage factors of the piping system are computed based on the formulation specified in ASME Code Section III, Subarticle NB-3600; and for ASME Code Class 2 and Class 3 piping, the formulations in Subarticles NC-3600 and ND-3600 are used.

In the simplified dynamic analysis described in Section 3.7.2.1.8.2 for BOP-supplied Seismic Category I piping, a constant load factor is used as the vertical and horizontal amplified floor response loadings.

ASME Code Class 2 and Class 3 piping systems specified as Seismic Category I, and 2-in. nominal diameter or smaller (i.e., equipment drain and instrument lines) are generally subject to simplified dynamic analyses as described above.

Where it is not feasible or practical to isolate the Seismic Category I piping system from the nonseismic Category I piping system, the adjacent nonseismic piping is then seismically designed according to the same criteria applicable to the Seismic Category I piping system. The attached nonseismic piping is also designed in such a manner that during an SSE, it does not cause a failure of the Seismic Category I piping.

3.9.3.1.18.4 Other Dynamic Loadings. Dynamic loadings resulting from sudden closure of an isolation valve or a turbine throttle valve on the piping system (for example, transient loading on steam line due to turbine trip) are included as occasional mechanical loads in piping analysis. Shock suppresser constraints are used as required to control excessive displacements or moments due to these transient loadings.

3.9.3.1.18.5 Analytical Models for Piping Systems. Piping systems are designed and analyzed as complete systems from anchor to anchor. The relative rigidity of major equipment terminal points is generally considered sufficient to effectively decouple the piping at that location. All major piping branches and all inline equipment (such as inline valves, etc.) are included in the analytical model used to determine relative flexibility and resulting stresses and deflections. Relatively flexible branches, having significantly smaller pipe diameter than the remainder of the piping system, are decoupled from the main run and are analyzed separately. For further discussion on modeling procedures see Section 3.7.2.3.

3.9.3.2 Pump and Valve Operability Assurance

For all active ASME Class 1, 2, and 3 pumps and valves see the Inservice Testing Program Plan.

These valves are designed according to ASME Code Section III rules to ensure that the calculated primary stresses are within the elastic range for all code-specified loading conditions. See Section 3.9.3.2.4 for additional information relative to active valve operability assurance.

The inactive valves and pumps within the RCPB are ASME Class 1. All inactive valves and pumps within the RCPB meet the stress and pressure limits of ASME Code Section III, NB-3500.

Active mechanical equipment classified as Seismic Category I is designed to perform its function during the life of the plant under postulated plant conditions. Equipment with faulted condition functional requirements include active pumps and valves in fluid systems such as the ECCS. Active equipment must perform a mechanical motion during the course of accomplishing a safety function.

Operability is ensured by satisfying the requirements of the following programs. Safety-related valves are qualified by testing and analysis and by satisfying stress and information criteria at all critical locations. The content of these programs is described in the following sections.

3.9.3.2.1 Emergency Core Cooling System Pumps

All active pumps are qualified for operability by first being subject to rigid tests before and after installation in the plant. The in-shop tests include (a) hydrostatic tests of pressure-retaining parts as required by the applicable Edition and Addenda of the ASME Code, (b) seal leakage tests, and (c) performance tests, while the pump is operated with flow to determine total developed head, minimum and maximum head, NPSH requirements, and other pump and/or motor parameters. Also monitored during these operating tests are bearing temperatures (except water-cooled bearings) and vibration levels. Both are shown to be below specified limits. After the pump is installed in the plant, it undergoes the cold-hydro tests, functional tests, and the required periodic inservice inspection and operation. These tests demonstrate reliability of the pump for the design life of the plant.

In addition to these tests, the safety-related active pumps are analyzed for operability during faulted conditions by ensuring that (a) the pump will not be damaged during the seismic and hydrodynamic event, and (b) the pump will continue operating despite the faulted loads.

3.9.3.2.1.1 Analysis of Loading, Stress, and Acceleration Conditions. To avoid damage during the faulted plant condition the stresses caused by the combination of normal operating loads, SSE, and dynamic loads are limited to the material elastic limit, as indicated in Section 3.9.3.1 and Table 3.9-2. A three-dimensional finite element model of the pump-motor and its supports was developed and dynamically analyzed using the response spectrum analysis method. The same model was analyzed for static nozzle loads, pump thrust loads, and dead weight. Critical location stresses were evaluated and compared with the allowable stress criteria. Critical location deflections and accelerations were evaluated to ensure operability. The average membrane stress (P_m) for the faulted condition loads is maintained at 1.2S, or approximately 0.75 S_y (S_y = yield stress) and the maximum stress in local fibers is limited to 1.8S, or approximately 1.1 S_y. The maximum allowable nozzle loads are also considered in the analysis of the pump supports to ensure that a system misalignment cannot occur.

Performing these analyses with the conservative loads stated and with the restrictive stress limits of Table 3.9-2 as allowables ensures critical parts of the pump are not damaged during the faulted condition and, therefore, the reliability of the pump for postfaulted condition operation is not impaired by the seismic and hydrodynamic events.

A dynamic analysis was made to determine the seismic load from the applicable floor response spectra. Analysis was made to check that faulted condition nozzle loads and dynamic accelerations did not impair the operability of the pumps during or following the faulted condition. Components of the pump, when having a natural frequency above 33 Hz, are considered essentially rigid. This frequency is considered sufficiently high to avoid problems with amplification between the component and structure for all seismic areas.

3.9.3.2.1.2 Pump Operation During and Following Faulted Condition Loading. Active pump/motor rotor combinations are desired to rotate at a constant speed under all considerations. Motors are designed to withstand short periods of severe overload. The high rotary inertia in the operating pump rotor and the nature of the random, short duration loading characteristics of the seismic and hydrodynamic event, will prevent the rotor from becoming seized. In actuality, the dynamic loadings will cause only a slight increase, if any, in the torque (i.e., motor current) necessary to drive the pump at the constant design speed. Therefore, the pump will not shut down during the faulted event and will operate at the design speed despite the faulted loads.

The functional ability of the active pumps after a faulted condition is ensured since only normal operating loads and steady state nozzle loads exist. For the active pumps, the faulted condition is greater than the normal condition only due to seismic and hydrodynamic loads on the equipment itself. The faulted event is infrequent and of relatively short duration compared to the design life of the equipment. Since it is demonstrated that the pumps would not be damaged during the faulted condition, the postfaulted condition operating loads will be no worse than the normal plant operating limits. This is ensured by requiring that the imposed nozzle loads (steady-state loads) for normal conditions and postfaulted conditions are limited by the magnitudes of the normal condition allowable nozzle loads. The postfaulted condition ability of the pumps to function under these applied loads is proven during the normal operating plant conditions for active pumps.

3.9.3.2.2 Standby Liquid Control Pump and Motor Assembly and Reactor Core Isolation Cooling Pump Assembly

These equipment assemblies are compact, rigid assemblies. Each equipment assembly has been dynamically qualified by way of static analysis only. This static qualification verifies operability under seismic conditions and ensures structural loading stresses within Code limitations.

3.9.3.2.3 Emergency Core Cooling System Pump Motors

Qualification of the Class 1E motors used for the ECCS pumps is in compliance with NUREG-0588 Cat II. The qualification of CGS motors is based on a type test of a similar motor. All manufacturing, inspection, and routine tests by motor manufacturer on production units were performed on the test motor.

The type test has been performed on a 1250-hp vertical motor in accordance with IEEE 323-1971, first simulating normal operation during the design life, then the motor being subject to a number of seismic events, and then to the abnormal environment condition possible during and after a LOCA. The test plan for the type test was as follows:

a. Thermal aging of the motor electrical insulation system (which is a part of the stator only) was based on IEEE 275-1966 for the insulation type used on the ECCS motors. The amount of aging equaled the total estimated operation days at maximum insulation surface temperature;

b. Radiation aging of the motor electrical insulation equals the maximum estimated integrated dose of gamma irradiation during normal and abnormal conditions;

c. The normal induced vibration effect on the insulation system has been simulated by horizontal vibration of 1.5g at 60 Hz for 1 hr duration;

d. Motor bearings are selected based on bearing manufacturer's test and operating data using the loads calculated to act on the bearings. Operating life is determined by condition monitoring;

e. The dynamic load deflection analysis on the rotor shaft, performed to ensure adequate rotation clearance, was verified by static loading and deflection of the rotor for the type test motor;

f. Dynamic load aging and testing was performed on a biaxial test table in accordance with IEEE 344-1975. During this type test, the shake table was activated simulating the maximum design limit of the SSE with motor starts and operation combinations as may possibly occur during a plant life; and

g. An environmental test simulating a LOCA condition with 100 days duration time has been performed with the test motor fully loaded, simulating pump operation. The test consisted of startup and 6 hr operation at 212°F ambient temperature and 100% quality steam. Another startup and operation of the test motor after 1-hr standstill in the same environment was followed by sufficient operation at high humidity and temperature, based on extrapolation in accordance with the temperature life characteristic curve from IEEE 275 for the insulation type used on the ECCS motors.

3.9.3.2.4 ASME Code Class 1 Active Valves

The Class 1 active valves are the MSIVs, SRVs, and SLC valves. Each of these valves is designed to perform its mechanical motion in conjunction with a DBA including hydrodynamic loads. Qualification for operability is unique for each valve type; therefore, each method of qualification is detailed individually below.

3.9.3.2.4.1 Main Steam Isolation Valve. The MSIVs are evaluated for operability during seismic and hydrodynamic loads events by both analysis and test.

a. First, the valve body is designed in accordance with the ASME Code Section III, Class 1 which limits deformation in the operating area of the valve body to be within the elastic limit of the material by limiting pressure and pipe reaction input loads (including seismic), thereby ensuring no interference with valve operability. (See Table 3.9-2h);

b. A dynamic (including hydrodynamic loads) test was conducted on the MSIV to ensure operability at design seismic and hydrodynamic loading requirements. A sine sweep was used to determine resonance frequencies of the actuator assembly. A sine beat was used to excite the actuator assembly at all frequencies up to 33 Hz with special emphasis at the resonance frequency. Operability was demonstrated at each test point. No significant change in valve closing rate resulted from the test. It was also demonstrated that the valve configuration had sufficient integrity to withstand, without compromise of structure or electrical function, the required simulated seismic and hydrodynamic loads event.

To ensure design limits are not exceeded for both piping input loads and actuator dynamic loads the MSIV is mathematically modeled in the main steam line system analysis. The valve's actual input loads, amplified accelerations, and resonance frequencies are determined based on site excitation input to the system as a part of the overall steam line analysis. Pipe anchors and restraints are applied as required to limit pipe system resonance frequencies and amplified acceleration to within acceptable limits for the MSIVs; and

c. The MSIVs operability following a downstream line break was demonstrated by the "Static Line Test" as defined in the report APED-5750 (March 1969). The test specimen was a 20-in. valve of a design representative of the MSIVs.

Environmental qualification of sensitive electrical/pneumatic equipment to meet performance requirements defined in Tables 3.11-1 and 3.11-2 have been successfully completed by product design and test evaluation methods.

3.9.3.2.4.2 Main Steam Safety/Relief Valves. The SRVs are qualified by test for operability during seismic and hydrodynamic load events. Structural integrity of the configuration during a dynamic event is demonstrated by both code analysis and test.

a. Valve is designed for maximum moments which may be imposed when installed in service. These moments are resultants due to dead weight plus seismic and hydrodynamic loadings on both valve and connecting pipe, thermal expansion of the connecting pipe, and reaction forces from valve discharge;

b. The operability of a production SRV was demonstrated by a dynamic qualification (shake table) test which applied moment and 'g' loads greater than the required design limit loads and conditions.

A mathematical model of this valve is included in the main steam line system analysis as with the MSIVs. This analysis ensures that the equipment design limits are not exceeded; and

c. The SRV is generically qualified via testing for seismic and hydrodynamic loading. The input shock spectrum contained waveforms with frequencies up to 100 Hz.

The sensitive electrical/pneumatic equipment is qualified to performance requirements during and after emergency environmental conditions defined in Section 3.11.

3.9.3.2.4.3 Standby Liquid Control Valve (Explosive Valve). The SLC explosive valve has been generically qualified to IEEE 344-1975. The generic qualification test demonstrated the absence of natural frequencies below 33 Hz and the ability to remain operable after the application of horizontal seismic loading equivalent to 6.5g and a vertical seismic loading equivalent to 4.5g at 33 Hz.

3.9.3.2.4.4 High-Pressure Core Spray Valve. This valve is a motor-operated gate valve. The body design analysis and testing is in accordance with the ASME Code Section III, Class 1 requirements.

3.9.3.2.5 Class 2 and 3 Active Valves

General Electric has six HPCS valves which are "Class 2 Active" in their scope of supply. There are no "Class 3 Active" valves in GE's scope of supply. All gate/globe valves are motor operated and check valves are air operated.

The gate/globe valves are generically qualified by testing valves that are typical of the valves supplied by GE. Operability is ensured by testing under both the static design basis load and at the maximum capability static load. The tests ensure operability during and after the design basis load. The actuators are qualified to IEEE 382-1972, to levels that exceed the design loadings.

3.9.3.2.6 Engineered Safety Features Pumps

The ESF pumps are designed to the appropriate section of the ASME Code using conservatively derived loads including the effects of SSE. The ESF pump design is based on analytical results or appropriate dynamic testing to meet the seismic loading requirements as

defined by the applicable floor response spectrum for the appropriate damping coefficients. For the small, compact pumps comprising rigid assemblies with natural frequencies well above 33 Hz, the assemblies may have been qualified by static analytical methods only. The ECCS pumps discussed in Section 3.9.3.2.1 are included in the ESF categorization.

3.9.3.3 Design and Installation Details for Mounting of Pressure Relief Devices

The design criteria for all safety and relief piping are in accordance with the rules in paragraphs NB-3677 and NC-3677 of ASME Section III, and the rules of Code Case 1569, applicable to the piping component under investigation. For relief systems the design criteria and the analyses used to calculate maximum stresses and stress intensities are in accordance with subarticles NB-3600 and NC-3600 of ASME Code Section III. The maximum stresses are calculated based on the full discharge loads, including the effects of the system dynamic response, and the system design internal pressure. Stresses are determined for all significant points in the piping system including the safety valve inlet pipe nozzle and the nozzle to shell juncture.

Detailed evaluations are performed only for valves which produce transient effects; small relief valves [for example, those relieving temperature induced water (expansion)], where pressure relief is accomplished without transient effects, are not evaluated.

3.9.3.3.1 Main Steam Safety/Relief Valves

Safety/relief valve lift results in a transient that produces momentary unbalanced forces acting on the discharge piping system for the period from opening of the SRV until a steady discharge flow from the RPV to the suppression pool is established. This period includes clearing of the water slug from the end of the discharge piping submerged in the suppression pool. Pressure waves traveling through the discharge piping following the relatively rapid opening of the SRV cause the SRV discharge piping to vibrate. This in turn produces forces that act on the main steam piping and the discharge piping.

The analysis of the relief valve discharge transient consists of a stepwise time history solution of the fluid flow equation, to generate a time history of the fluid properties at numerous locations along the pipe. The fluid transient properties are calculated based on the maximum set pressure specified in the steam system specification and the value of ASME flow rating increased by a factor to account for the conservative method of establishing the rating. Reaction loads on the pipe are determined at each location corresponding to the position of an elbow. These loads are composed of pressure-times-area, momentum change, and fluid friction terms. Figure 3.9-1 shows a pipe section load transient typical of that produced by relief valve discharge.

The methods of analysis applied to determine piping system response to relief valve operation are either time-history integration method or the normal mode superposition technique. The

forces are applied at locations on the piping system where fluid flow changes direction, thus causing momentary reactions. The resulting loads on the SRV, the main steam line, and the discharge piping are combined with loads due to other effects as specified in Section 3.9.3.1. The code stress limits, corresponding to load combinations classification as normal, upset, emergency, and faulted are applied to the steam and discharge pipe.

3.9.3.3.2 Open Relief Systems

There are no open discharge pressure relief valves mounted on Class 1, 2, or 3 systems in the NSSS and BOP system.

3.9.3.3.3 Closed Relief System

For relief valves discharging into a closed system, an analytical model of one-dimensional transient flow characteristics following the blowoff of the upstream SRV into the discharging piping system is established. The time-dependent pressure, temperature, density, velocity, and hence the momentum of the downstream pipe flow are then computed from this conservative hydrodynamic/thermodynamic flow model. The phenomena such as flow restrictions, frictional resistance, and flow discontinuities (shock waves) are considered. This model also considers the influence of valve opening time and the effect of loop seal water contained in the upstream valve seat.

The unbalanced transient hydraulic forcing function acting on the piping system computed from the flow model is then used to determine the transient dynamic responses of the piping structural model. Adapting the lumped-parameter method incorporated with the modal analysis of piping system, the time-history modal responses are computed. Computations of maximum stress intensities for ASME Code Class 1 piping, or maximum stress levels for ASME Code Class 2 and 3 piping, are based on the dynamic analysis of the system.

3.9.3.4 Component Supports

Component supports are discussed in Section 5.4.14. The discussion of design loading combinations, design procedures, and acceptability criteria is presented below.

All safety-related component supports in the BOP are designed in accordance with ASME Code Section III, Subsection NF, 1971 Edition, Winter 1973 Addenda. The bases for allowable buckling loads and allowable buckling stresses are the allowable load equations and stress equations from ASME Code Section III, 1974 Edition, as referenced below:

a. Subsection NA, “General Requirements,” Appendix XVII; “Design of Linear Type Supports by Analysis,” subarticle XVII-2213; “Stress In Compression,” and subarticle XVII-2215, “Combined Stresses;”

b. Subsection NA, Appendix XVII, subarticle XVII-2220, "Stability and Slenderness and Width Thickness Ratios;" and

c. Subsection NA, Appendix F, "Rules for Evaluation of Faulted Conditions."

Critical buckling loads for plant faulted conditions are determined by methods described in Subsection NA, Appendix F, and allowable loads are limited to two-thirds of critical buckling loads.

3.9.3.4.1 Pipe Supports

Pipe supports for ASME jurisdictional systems are designed in accordance with Subsection NF of ASME Code Section III, 1971 Edition, Winter 1973 Addenda. Component standard supports for ASME piping are designed in accordance with ASME Code Section III, Subsection NF, 1971 Edition, Winter 1973 Addenda, or later code editions. Supports are either designed by load rating or to the stress limits for the applicable code. In general, the load combinations for the various operating conditions correspond to those used to design the supported pipe. The design and evaluation of welded attachments to Class 2 and 3 piping shall be made in accordance with ASME Code Cases N-318, N-224, N-224-1, and N-392. No pipe support fatigue evaluation is necessary since the code stipulated minimum number of cyclic events for high cycle fatigue evaluation are not met (see Subsection NA, Appendix XVII-3000).

The design criteria and dynamic testing requirements for supports are as follows:

a. Standard supports

Standard pipe support hardware encompasses items such as struts, pipe clamps, U-bolts, saddles, lubrite plates, rods, turnbuckles, eyenuts, and other attachment and bracket fixtures. These items are selected based on certified load ratings, which in each specific application are selected to bound the applied pipe loading. All standard pipe support hardware is designed, fabricated, and installed so that it cannot become disengaged by the movement of the supported pipe or equipment after it has been placed in service.

b. Spring supports

The design load on spring supports is the load caused by dead weight. The supports are calibrated to ensure that they support the design load at both their hot and cold settings. Spring supports provide a specified downtravel and uptravel in excess of the specified thermal movement. Spring supports are selected such that bottoming will not occur during design bases dynamic loading events.

c. Snubbers

The design load on snubbers includes those loads caused by seismic forces (OBE and SSE) and containment hydrodynamic loading for those snubbers within the containment anchor boundary. System movements and reaction forces caused by relief valve discharge, turbine stop valve closure, and similar transients may also be included when applicable.

The snubbers are designed in accordance with NF-3000 to be capable of carrying the design load for all operating conditions. They are designed to be able to carry the load under normal, upset, emergency, and faulted loading conditions.

Two snubbers of each size and each model were tested under upset and faulted loads in the manner described below:

1. Snubbers were tested dynamically to ensure that they could perform as required under upset loading condition in the following manner:

   (a) The snubbers were subjected to a force that varied approximately as the sine wave,

   (b) The frequency (Hz) of the input force was in increments of 5 Hz within the range of 3 Hz to 33 Hz,

   (c) The test was conducted with the snubber at room temperature and at 200°F,

   (d) The peak load in both tension and compression was equal to or higher than the rated load of the snubbers, and

   (e) The duration of the test at each frequency was 10 sec or more.

2. Snubbers were tested dynamically to ensure that they could perform as required under emergency and faulted loading conditions in the following manner:

   (a) The snubbers were subjected to a force that varied approximately as the sine wave,

   (b) The test was conducted with the snubbers at room temperature,

(c) The peak load in both tension and compression was equal to 1.5 times the rated load of the snubbers,

(d) The duration of the test was 10 sec,

On completion of the above abnormal environmental transient test, the snubber was tested dynamically at a frequency within a specified frequency range. The snubber did operate normally during the dynamic test, and

(e) Bolting and welding of pipe support structures (i.e., nonpipe class attachments) meet the requirements of Subsection NF and Subsection NE for primary containment attachments (1971 ASME Code Edition, Winter 1973 Addenda). Bolting and welding of pipe support structures outside of the NF jurisdictional boundary complies with the requirements of the AISC Code, 1970, 7th Edition.

(f) Operability assurance of snubbers

Snubber operability was verified during the plant Power Ascension Test Program in the system expansion test described in Section 14.2.12.3.17.

Supply system design and plant administrative procedures are established which require that applicable documentation (SAR, Technical Specifications, Design Drawings, etc.) is revised to reflect the plant configuration as altered by design changes. These design change control procedures require documented acceptance testing for all additional snubber installations on safety-related systems. One step of this design verification requires evaluation of the impact of the design change on the operation of the facility. Snubbers added to safety-related systems or requiring surveillance testing will be added to the Snubber Program.

The Snubber Program includes a compilation of safety-related snubbers and specifies snubber inspection and testing requirements. Snubber accessibility, maintenance and repair/replacement are addressed in the Snubber Program.

3.9.3.4.2 Reactor Pressure Vessel Support Skirt

The RPV support skirt is designed as an ASME Code Class 1 plate and shell type component support per the requirements of ASME Code Section III, Subsection NB, 1971 Edition, Summer 1971 Addenda. The loading conditions, stress criteria, calculated stresses, and the allowable stresses in the critical support areas for various plant operating conditions are summarized in Table 3.9-2a.

In design of the reactor vessel support skirt as a plate and shell-type component support, the allowable compressive load was limited to 90% of the load, which produces a stress equivalent to yield stress in the material, divided by the safety factor for the plant condition being evaluated. The safety factor for the faulted condition was 1.125. The effects of fabrication and operational eccentricity were included in stress calculations.

A buckling analysis of the RPV support skirt for faulted conditions shows the support skirt meets ASME Code Section III, paragraph F-1370(c) faulted condition limits of 0.67 times the critical buckling strength of the support at temperature. The design basis faulted condition for this analysis included compressive loads due to the design basis maximum earthquake, overturning moments and shears due to the jet reaction load from a postulated severed pipe, and compressive effects on the support skirt from thermal and pressure expansion of the reactor vessel. The expected maximum loads for the CGS vessel support skirt are less than 50% of the maximum design basis loads used in the buckling analysis; therefore, the reactor vessel support skirt is adequately designed to prevent buckling.

3.9.3.4.3 Nuclear Steam Supply System Floor-Mounted Equipment (Pumps and Heat Exchangers)

The RHR, HPCS, LPCS, RCIC, and SLC pumps and heat exchangers are all analyzed to verify the adequacy of their support structure under various plant operating conditions. In all cases, the stresses in the critical support areas are within ASME Code allowables. The loading conditions, stress criteria, and allowable stresses in the critical support areas are summarized in Tables 3.9-2L, 3.9-2n, 3.9-2o, and 3.9-2r.

3.9.3.4.4 Supports for ASME Code Class 1, 2, and 3 Active Components

The ASME Code Class 1, 2, and 3 active components are either pumps or valves. Since valves are supported by piping and not tied to building structures, pipe design criteria govern.

Seismic Category I active pump supports are qualified for seismic and hydrodynamic loads by testing when the pump supports along with the pumps are fulfilling the following conditions:

a. Simulate actual mounting conditions;

b. Simulate all static and dynamic loadings on the pump;

c. Monitor pump operability during testing;

d. The normal operation of the pump during and after the test indicates that the supports are adequate. Any deflection or deformation of the pump supports which precludes the operability of the pump is not accepted; and

e. Supports are inspected for structural integrity after the test. Any cracking or permanent deformation is not accepted.

Seismic and hydrodynamic qualification of component supports by analysis is generally accomplished as follows:

a. Stresses at all support elements and parts such as pumps holddown and baseplate holddown bolts, pump support pads, pump pedestal, and foundation are checked to be within the allowable limits as specified in ASME Subsection NF;

b. For normal and upset plant conditions, the deflections and deformations of the supports are ensured to be within the elastic limits and not exceed the values permitted by the design based on design verification tests to ensure the operability of the pumps; and

c. For emergency and faulted plant conditions, the deformations must not exceed the values permitted by design to ensure that operability of the pumps.

3.9.3.5 Pipe Support Analysis

The complex structural design of many pipe supports necessitates the use of computer programs to confirm their integrity under various loading conditions (including seismic loading). Computer program use extends from commercially available packages such as ANSYS and STRUDL (Structural Analysis Programs) to those which were developed specifically for CGS. Pipe support design analyses were performed (when required) using computer programs as described in Section 3.12.

3.9.4 CONTROL ROD DRIVE SYSTEM

CGS is equipped with a hydraulic CRD system which includes the CRD mechanism, the HCU, the condensate supply system and the scram discharge volume, and extends to the coupling interface with the control rods.

3.9.4.1 Descriptive Information Regarding Control Rod Drive Systems

Descriptive information on the CRDs as well as the entire control and drive system is contained in Section 4.6.

3.9.4.2 Applicable Control Rod Drive Systems Design Specification

The CRD system is designed to meet the functional design criteria as outlined in Section 4.6 and consists of the following:

a. Locking piston CRD,
b. Hydraulic control unit,
c. Hydraulic power supply (pumps),
d. Interconnecting piping,
e. Flow and pressure and isolation valves, and
f. Instrumentation and electrical controls.

Those components of the CRD system forming part of the primary pressure boundary are designed according to ASME Code Section III.

The quality group classification of the components of the CRD hydraulic system is outlined in Table 3.2-1 and the components are designed according to the codes and standards governing the individual quality groups.

Pertinent aspects of the design and qualification of the CRD system components are discussed in the following locations: transients in Section 3.9.1.1, faulted conditions in Section 3.9.1.4, and seismic testing in Section 3.9.2.2.

3.9.4.3 Design Loads, Stress Limits, and Allowable Deformation

The ASME Code components of the CRD system have been evaluated analytically and the design loading conditions plus the effects of hydrodynamic loads where applicable, stress criteria, calculated stresses, and allowable stresses are summarized in Tables 3.9-2u and 3.9-2v. For the noncode components, experimental testing was used to determine the CRD performance under all possible conditions as described in Section 3.9.4.4.

Deformation is not a limiting factor in the analysis based on the results of the numerous tests performed on the drive.

The CRD housing support system functions are described in Section 4.6.

The American Institute of Steel Construction (AISC) Manual of Steel Construction (Reference 3.9-13), was used in designing the CRD housing support system. However, to provide a structure that absorbs as much energy as practical without yielding the allowable tension and bending stresses used were 90% of yield and the shear stress used was 60% of yield. These design stresses are 1.5 times the AISC allowable stresses (60% and 40% of yield, respectively).

For purposes of mechanical design, the postulated failure resulting in the highest forces is an instantaneous circumferential separation of the CRD housing from the reactor vessel, with the reactor operating pressure of 1086 psig (at the bottom of the vessel) acting on the area of the separated housing. The weight of the separated housing, CRD, and blade, plus the pressure of 1086 psig acting on the area of the separated housing, gives a force of approximately 32,000 lb. This force is multiplied by a factor of three to calculate the impact force, conservatively assuming that the housing travels through a 1-in. gap before it contacts the supports. The impact force (109,000 lb) is then treated as a static load in design. The CRD housing supports are designed as Seismic Category I equipment. Loading conditions and examples of stress analysis results and limits are shown in Table 3.9-2ac.

3.9.4.4 Control Rod Drive Performance Assurance Program

The CRD system test program consists of the following tests:

a. Development tests,
b. Factory quality control tests,
c. 5-year maintenance life tests,
d. 1.5 x design life tests,
e. Operational tests,
f. Acceptance tests, and
g. Surveillance tests.

All of the above tests except c and d are discussed in Sections 4.6.3 through 4.6.3.1.1.5. Tests c and d are discussed as follows:

"5-Year Maintenance Life" Tests

Four CRDs are normally picked at random from the production stock each year and subjected to various tests under simulated reactor conditions and one-eighth of the cycles specified in Section 3.9.1.1.1.

On completion of the test program, the CRDs must meet or surpass the minimum specified requirements.

1.5 x Design Life Tests

When a significant design change is made to the components of the drive, the drive is subjected to a series of tests equivalent to 1.5 times the life test cycles specified in Section 3.9.1.1.1.

Two CRDs underwent such testing in 1976. On completion of the test program, the CRDs met or surpassed the minimum specified performance requirements.

3.9.5 REACTOR PRESSURE VESSEL INTERNALS

This subsection identifies and discusses the structural and functional integrity of the major RPV internals.

3.9.5.1 Design Arrangements

The core support structure and reactor vessel internals (exclusive of fuel, control rods, CRDs, and in-core nuclear instrumentation) are identified below:

a. Core support structures

1. Shroud,
2. Shroud support,
3. Core support plate, holddown bolts, and core plate wedges,
4. Top guide (including bolts and keepers),
5. Fuel supports, and
6. Control rod guide tubes.

b. Reactor internals

1. Jet pump assemblies and instrumentation,
2. Feedwater spargers,*
3. Vessel head spray nozzle,
4. Differential pressure line,
5. In-core flux monitor guide tubes,*
6. Initial startup neutron sources,*
7. Surveillance sample holders,*
8. Core spray lines and spargers and SLC injection,
9. In-core instrument housings (Dry Tubes),
10. LPCI coupling,
11. Steam dryer,*

* Non-safety-class components.

12. Shroud head and steam separator assembly,*
13. Guide rods,* and
14. CRD thermal sleeves.

A general assembly drawing of the important reactor components is shown in Figure 5.3-5.

The floodable inner volume of the RPV can be seen in Figure 3.9-2. It is the volume inside the core shroud up to the level of the jet pump suction inlet.

The design arrangement of the reactor internals, such as the jet pumps, steam separators, and guide tube, is such that one end is free to expand.

The LPCI couplings incorporate sleeves to allow free thermal expansion.

3.9.5.1.1 Core Support Structures and Vessel Internals

The core support structures and vessel internals consist of those items listed in Section 3.9.5.1. These structures form partitions within the reactor vessel, to sustain pressure differentials across the partitions, direct the flow of the coolant water, and laterally locate and support the fuel assemblies. Figure 3.9-2 shows the reactor vessel internal flow paths.

3.9.5.1.1.1 Shroud. The shroud support, shroud, and top guide make up a stainless steel cylindrical assembly that provides a partition to separate the upward flow of coolant through the core from the downward recirculation flow. This partition separates the core region from the downcomer annulus, thus providing a floodable region following a recirculation line break. The volume enclosed by this assembly is characterized by three regions. The upper portion surrounds the core discharge plenum, which is bounded by the shroud head on top and the top guide's grid plate below. The central portion and the shroud surrounds the active fuel and forms the longest section of the assembly. This section is bounded at the bottom by the core support. The lower portion, surrounding part of the lower plenum, is welded to the RPV shroud support.

3.9.5.1.1.2 Shroud Head and Steam Separator Assembly. The shroud head and steam separator assembly is bolted to the top guide to form the top of the core discharge plenum. This plenum provides a mixing chamber for the steam-water mixture before it enters the steam separators. Individual stainless steel axial flow steam separators are attached to the top of standpipes that are welded into the shroud head. The steam separators have no moving parts. In each separator, the steam-water mixture rising through the standpipe passes vanes that impart a spin to establish a vortex separating the water from the steam. The separated water flows from the lower portion of the steam separator into the downcomer annulus.

* Non-safety-class components.

3.9.5.1.2 Core Plate

The core plate consists of a circular stainless steel plate with bored holes stiffened with a rim and beam structure. The plate provides lateral support and guidance for the control rod guide tubes, incore flux monitor guide tubes, peripheral fuel supports, and startup neutron sources. The last two items are also supported vertically by the core support plate.

The entire assembly is bolted to a support ledge on the lower portions of the shroud.

3.9.5.1.3 Top Guide

The top guide is formed by a series of stainless steel beams joined at right angles to form square openings and fastened to a peripheral rim. Each opening provides lateral support and guidance for four fuel assemblies or, in the case of peripheral fuel, one or two fuel assemblies. Sockets are provided in the bottom of the beam intersections to anchor the incore flux monitors and startup neutron sources. The rim of the top guide rests on a ledge between the upper and central portions of the shroud. The top guide has alignment pins that engage and bear against slots in the shroud which are used to correctly position the assembly before it is secured. Lateral restraint is provided by wedge blocks between the top guide and the shroud wall.

3.9.5.1.4 Fuel Support

The fuel supports shown in Figure 3.9-3 are of two basic types: namely, peripheral supports and four-lobed orificed fuel supports. The peripheral fuel support is located at the outer edge of the active core and is not adjacent to control rods. Each peripheral fuel support supports one fuel assembly and contains a single orifice assembly designed to assure proper coolant flow to the peripheral fuel assembly. Each four-lobed orificed fuel support supports four fuel assemblies and is provided with four orifice plates to assure proper coolant flow distribution to each rod-controlled fuel assembly. The four-lobed orificed fuel supports rest in the top of the control rod guide tubes which are supported laterally by the core support. The control rods pass through slots in the center of the four-lobed orificed fuel support. A control rod and the four adjacent fuel assemblies represent a core cell (see Section 4.2.2).

3.9.5.1.5 Control Rod Guide Tubes

The control rod guide tubes, located inside the vessel, extend from the top of the CRD housings up through holes in the core support plate. Each tube is designed as the guide for a control rod and as the vertical support for a four-lobed orificed fuel support piece and the four fuel assemblies surrounding the control rod. The bottom of the guide tube is supported by the CRD housing, which in turn transmits the weight of the guide tube, fuel support, and fuel assemblies to the reactor vessel bottom head. A thermal sleeve is inserted into the CRD housing from below and is rotated to lock the control rod guide tube in place. A key is

inserted into a locking slot in the bottom of the CRD housing to hold the thermal sleeve in position.

3.9.5.1.6 Jet Pump Assemblies

The jet pump assemblies are located in two semicircular groups in the downcomer annulus between the core shroud and the reactor vessel wall. The design and performance of the jet pump is covered in detail in References 3.9-14 and 3.9-15. Each stainless steel jet pump consists of driving nozzles, suction inlet, throat or mixing section, slip joint clamp, and diffuser (see Figure 3.9-4). The driving nozzle, suction inlet, and throat are joined together as a removable unit, and the diffuser is permanently installed. High pressure water from the recirculation pumps is supplied through a single riser pipe welded to the recirculation inlet nozzle thermal sleeve of each pair of jet pumps. A riser brace consists of cantilever beams welded to a riser pipe and to pads on the reactor vessel wall.

The nozzle entry section is connected to the riser by a metal-to-metal, spherical-to-conical seal joint. Firm contact is maintained by a holddown clamp. The throat section is restrained laterally by a bracket attached to the riser. Some restrainer brackets may have one or more auxiliary or restrainer wedges installed to replace the function of restrainer bracket set screws found having an excessive throat-to-set screw gap. There is a slip-fit joint between the throat and diffuser. A removable clamp is installed at the slip-fit joint to suppress abnormal flow-induced vibration caused by slip joint leakage. The diffuser is a gradual conical section changing to a straight cylindrical section at the lower end.

3.9.5.1.7 Steam Dryers

The steam dryers remove moisture from the wet steam leaving the steam separators. The extracted moisture flows down the dryer vanes to the collecting troughs, then flows through tubes into the downcomer annulus. A skirt extends from the bottom of the dryer vane housing to the steam separator standpipe, below the water level. This skirt forms a seal between the wet steam plenum and the dry steam flowing from the top of the dryers to the steam outlet nozzles.

The steam dryer and shroud head are positioned in the vessel during installation with the aid of vertical guide rods. The dryer assembly rests on steam dryer support brackets attached to the reactor vessel wall. Upward movement of the dryer assembly, which would occur only under accident conditions, is restricted by steam dryer hold-down brackets attached to the reactor vessel top head.

3.9.5.1.8 Feedwater Spargers

The feedwater spargers are stainless steel headers located in the mixing plenum above the downcomer annulus. A separate sparger is fitted to each feedwater nozzle and is shaped to

conform to the curve of the vessel wall. Sparger end brackets are pinned to vessel brackets to support the spargers. Feedwater flow enters the center of the spargers and is discharged radially inward to mix the cooler feedwater with the downcomer flow from the steam separators and steam dryer before it contacts the vessel wall. The feedwater also serves to condense the steam in the region above the downcomer annulus and to subcool the water flowing to the jet pumps and recirculation pumps.

3.9.5.1.9 Core Spray Lines and Standby Liquid Control Injection

The core spray lines are the means for directing flow to the core spray nozzles which distribute coolant during accident conditions.

Two core spray lines enter the reactor vessel through the two core spray nozzles (see Section 5.4). The lines divide immediately inside the reactor vessel. The two halves are routed to opposite sides of the reactor vessel and are supported by clamps attached to the vessel wall. The lines are then routed downward into the downcomer annulus and pass through the upper shroud immediately below the flange. The flow divides again as it enters the center of the semicircular sparger, which is routed halfway around the inside of the upper shroud. The two spargers are supported by brackets designed to accommodate thermal expansion. The line routing and supports are designed to accommodate differential movement between the shroud and vessel. The other core spray line is identical except that it enters the opposite side of the vessel and the spargers are at a slightly different elevation inside the shroud. The correct spray distribution pattern is provided by a combination of distribution nozzles pointed radially inward and downward from the spargers (see Section 6.3).

The SLC system also injects to the RPV via the HPCS header. The SLC injection can be accomplished with HPCS flow either on or off.

3.9.5.1.10 Vessel Head Spray Nozzle

When reactor coolant is returned to the reactor vessel part of the flow can be diverted to a spray nozzle in the reactor head. This spray maintains saturated conditions in the reactor vessel head volume by condensing steam being generated by the hot reactor vessel walls and internals. The spray also decreases thermal stratification in the reactor vessel coolant. This ensures that the water level in the reactor vessel can rise. The higher water level provides conduction cooling to more of the mass of metal of the reactor vessel and, therefore, help to maintain the cooldown rate.

The vessel head spray nozzle is mounted to a short length of pipe and a flange, which is bolted to a mating flange on the reactor vessel head (see Section 5.4.7).

3.9.5.1.11 Differential Pressure Line

The differential pressure line is used to sense the differential pressure across the core support plate (described in Section 5.4). This line enters the reactor vessel at a point below the core shroud as two concentric pipes. In the lower plenum, the two pipes separate. The inner pipe terminates near the lower shroud with a perforated length below the core support plate. It is used to sense the pressure below the core support plate during normal operation. The inner pipe was also designed to reduce thermal shock to the vessel nozzle should the SLC system be actuated. However, the SLC injection piping has been relocated to the HPCS injection line and it no longer uses this nozzle. The outer pipe terminates immediately above the core support plate and senses the pressure in the region outside the fuel assemblies.

3.9.5.1.12 In-Core Flux Monitor Guide Tubes

The in-core flux monitor guide tubes provide a means of positioning fixed detectors in the core as well as provide a path for calibration monitors (TIP system).

The in-core flux monitor guide tubes extend from the top of the in-core flux monitor housing (see Section 5.4) in the lower plenum to the top of the core support plate. The power range detectors for the power range monitoring units and the dry tubes for the source range monitoring (SRM) and intermediate range monitoring (IRM) detectors are inserted through the guide tubes. A lattice-work of clamps, tie bars, and spacers give lateral support and rigidity to the guide tubes. The bolts and clamps are welded, after assembly, to prevent loosening during reactor operation.

3.9.5.1.13 Surveillance Sample Holders

The surveillance sample holders are welded baskets containing impact and tensile specimen capsules (see Section 5.4). The baskets hang from the brackets that are attached to the inside wall of the reactor vessel and extend to mid-height of the active core. The radial positions are chosen to expose the specimens to the same environment and maximum neutron fluxes experienced by the reactor vessel itself while avoiding jet pump removal interference or damage.

3.9.5.1.14 Low-Pressure Coolant Injection Lines

Three LPCI lines penetrate the core shroud through separate LPCI nozzles. Coolant is discharged inside the core shroud.

The following italicized text is historical information provided in the FSAR to support the application for an operating license. As such, it is not subject to change and therefore has not been verified for accuracy or updated during the FSAR upgrade process per 10 CFR 50.71(e).

3.9.5.1.15 Startup Neutron Sources

The startup neutron sources are held in place by spring pressure between the top of the core support and the bottom of the top guide. Each source consists of two irradiated antimony rods within a single beryllium cylinder. Both the antimony and the beryllium are encased in stainless steel tubes. The design provides for a sufficient source of neutrons present in the core to assure that the core neutron flux is continuously detectable by installed neutron monitors and to assure that significant changes in core reactivity are readily detectable by installed neutron flux instrumentation.

3.9.5.2 Design Loading Conditions

3.9.5.2.1 Events to be Evaluated

Examination of the spectrum of condition for which the safety design bases must be satisfied reveals five significant faulted events:

a. A recirculation line break between the reactor vessel and the recirculation pump suction,

b. Annulus pressurization load resulting from an asymmetric pressure build up due to a break in the recirculation inlet or feedwater lines in the annulus region between the shield wall and the RPV,

c. A steam line break accident of one main steam line between the reactor vessel and the flow restrictor. This accident results in significant pressure differentials across some of the structures within the reactor,

d. An earthquake which subjects the core support structures and reactor internals to significant forces as a result of ground motion, and

e. A SRV discharge in combination with an SSE.

Analysis of other conditions existing during normal operation, abnormal operational transients, and accidents shows that the loads affecting the core support structures and other ESF reactor internals are less severe than these five postulated events.

The faulted conditions for the RPV internals are discussed in Section 3.9.1.4.2. The analysis and loading combinations for the RPV internals are discussed in Section 3.9.3.1 and Tables 3.9-1 and 3.9-2.

3.9.5.2.2 Pressure Differential During Rapid Depressurization

A digital computer code is used to analyze the transient conditions within the reactor vessel following the recirculation line break accident and the steam line break accident. The analytical model of the vessel consists of nine nodes, which are connected to the necessary adjoining nodes by flow paths having the required resistance and inertial characteristics. The program solves the energy and mass conservation equations for each node to give the depressurization rates and pressure in the various regions of the reactor. Figure 3.9-5 shows the nodes. The computer code used is the GE Short-Term Thermal-Hydraulic Model described in Reference 3.9-16. This model has been approved for use in ECCS conformance evaluation under 10 CFR Part 50, Appendix K. In order to adequately describe the blowdown pressure effect on the individual assembly components, three features are included in the model that are not applicable to the ECCS analysis and are, therefore, not described in Reference 3.9-16

a. The liquid level in the steam separator region and in the annulus between the dryer skirt and the pressure vessel is tracked to more accurately determine the flow and mixture quality in the steam dryer and in the steam line;

b. The flow path between the bypass region and the shroud head is more accurately modeled since the fuel assembly pressure differential is influenced by flashing in the guide tubes and bypass region for a steam line break. In the ECCS analysis, the momentum equation is solved in this flow path but its irreversible loss coefficient is conservatively set at an arbitrary low value; and

c. The enthalpies in the guide tubes and the bypass are calculated separately since the fuel assembly P is influenced by flashing in these regions. In the ECCS analysis, these regions are lumped.

3.9.5.2.3 Recirculation Line and Steam Line Break

3.9.5.2.3.1 Accident Definition. Both a recirculation line break (the largest liquid break) and an inside steam line break (the largest steam break) are considered in determining the DBA for the ESF reactor internals. The recirculation line break is the same as the design basis LOCA described in Section 6.3. A sudden, complete circumferential break is assumed to occur in one recirculation loop. The pressure differentials on the reactor internals and core support structures are in all cases lower than for the main steam line break.

The analysis of the steam line break assumes a sudden, complete circumferential break of one main steam line between the reactor vessel and the main steam line restrictor. A steam line break upstream of the flow restrictors produces a larger blowdown area and thus a faster depressurization rate than a break downstream of the restrictors. The larger blowdown area results in greater pressure differentials across the reactor internal structures.

The steam line break accident produces significantly higher pressure differentials across the reactor internal structures than does the recirculation line break. This results from the higher reactor depressurization rate associated with the steam line break. Therefore, the steam line break is the DBA for internal pressure differentials.

3.9.5.2.3.2 Effects of Initial Reactor Power and Core Flow. The maximum internal pressure loads can be considered to be composed of steady-state and transient pressure differentials. For a given plant the core flow and power are the two major factors that influence the reactor internal pressure differentials. The core flow essentially affects only the steady-state part. For a fixed power, the greater the core flow, the larger will be the steady-state pressure differentials. On the other hand, core power affects both the steady-state and the transient parts. As the power is decreased, there is less voiding in the core and consequently the steady-state core pressure differential is less. However, less voiding in the core also means that less steam is generated in the RPV and thus the depressurization rate and the transient part of the maximum pressure load is increased. As a result, the total loads on some components are higher at lower power.

To ensure that the calculated pressure differences bound those which could be expected if a steam line break should occur, an analysis was conducted at a low power-high recirculation flow condition in addition to the standard safety analysis condition at high power, rated recirculation flow. The power chosen for analysis is the minimum value permitted by the recirculation system controls at rated recirculation drive flow (that is, the drive flow necessary to achieve rated core flow at rated power).

This condition maximizes those loads which are inversely proportional to power. It must be noted that this condition, while possible, is unlikely; first, because the reactor will generally operate at or near full power; and second, because high core flow is neither required nor desirable at such a reduced power condition.

3.9.5.2.4 Seismic and Hydrodynamic Events

The seismic and hydrodynamic loads acting on the structures within the reactor vessel are based on a dynamic analysis as described in Section 3.7.

3.9.5.3 Design Loading Categories

Loading combinations for the core support structures are shown in Table 3.9-2. The basis for determining faulted loads on the reactor internals is shown for seismic and hydrodynamic loads in Section 3.7 and for pipe rupture loads in Sections 3.9.5.2.3 and 3.9.5.4.3.

Table 3.9-2b includes loading combinations, analytical methods, and allowable and calculated stress values for typical core support structures and reactor internal components.

Stress intensity and other design limits for reactor internals are discussed in Section 3.9.5.4.4. The core support structures which are fabricated as part of the RPV assembly are discussed in Section 3.9.5.4.5.

The design requirements for equipment classified as "other," e.g., steam dryers and shroud heads, were specified by the designer giving appropriate consideration to the intended service of the equipment and expected plant and environmental conditions under which it will operate. Where possible, design requirements are based on applicable industry codes and standards. If these are not available, the designer relies on accepted industry or engineering practices.

3.9.5.4 Design Bases

3.9.5.4.1 Safety Design Bases

The reactor core support structures and internals meet the following safety design bases:

a. Arrangement provides a floodable volume in which the core can be adequately cooled in the event of a breach in the nuclear system process barrier external to the reactor vessel,

b. Deformation is limited to ensure that the control rods and ECCS can perform their safety functions, and

c. Mechanical design of applicable structures ensures that safety design bases items a and b are satisfied so that the safe shutdown of the plant and removal of decay heat are not impaired.

3.9.5.4.2 Power Generation Design Bases

The reactor core support structures and internals are designed to the following power generation design bases:

a. They provide the proper coolant distribution during all anticipated normal operating conditions up to full power operation of the core without fuel damage,

b. They are arranged to facilitate refueling operations, and

c. They are designed to facilitate inspection.

3.9.5.4.3 Response of Internals Due to Inside Steam Break Accident

The maximum pressure loads acting on the reactor internal components result from an inside steam line break, and on some components the loads are greatest with operation at the minimum power associated with the maximum core flow. This has been substantiated by the analytical comparison of liquid versus steam breaks and by the investigation of the effects of core power and core flow.

It has also been pointed out that it is possible but not probable that the reactor would be operating at the rather abnormal condition of minimum power and maximum core flow. More realistically, the reactor would be at or near a full power condition and thus the maximum pressure loads acting on the internal components would be less.

3.9.5.4.4 Stress, Deformation, and Fatigue Limits for Reactor Internals (Except Core Support Structure)

These limits are summarized in Table 3.9-2b.

Design Condition	Minimum Safety Factor
Normal	2.25
Upset	2.25
Emergency	1.5
Faulted	1.125

Elastic displacement is considered in the design of reactor internal components in which deflection can affect control rod insertability. No plastic deformation occurs in any permanent core support structure components or the reactor vessel. In the case of the core support plate, a detailed elastic-plastic analysis was performed to verify the adequacy of the core plate buckling capability. The analysis used an incremental loading technique and showed the core plate adequacy under the worst combination of seismic plus hydrodynamic loads. Radiation induced deformation can occur in the fuel channel over the core life. These effects are considered in control rod insertability tests. No fatigue analysis is required under the faulted conditions due to the low encounter frequency of faulted events and the low number of cycles. The forcing functions applicable to the reactor internals are discussed in Section 3.9.2.5.

3.9.5.4.5 Stress, Deformation, and Fatigue Limits for Core Support Structures

These limits are summarized in Tables 3.9-2a, 3.9-2b, and 3.9-2aa.

3.9.6 INSERVICE TESTING OF PUMPS AND VALVES

This section addresses the 10 CFR 50.55a required program for inservice testing of pumps and valves that have a specific function in shutting down the reactor to the cold shutdown condition, in maintaining the cold shutdown condition, or in mitigating the consequences of an accident. Where compliance with certain Code requirements specified in 10 CFR 50.55a(f) are found to be impractical for CGS, relief requests are submitted to the NRC.

3.9.7 REFERENCES

3.9-1 Wilson, E. L., "A Digital Computer Program for the Finite Element Analysis of Solids with Non-Linear Material Properties," Aerojet General Corporation, Sacramento, CA, Technical Memorandum No. 23, July 1965.

3.9-2 General Electric Report to NRC, "PISYS Analysis of NRC Problem," NEDO-24210, August 1979.

3.9-3 Levy, S., and Wilkinson, J. D., "The Component Element Method in Dynamics," McGraw Hill Company, New York, 1976.

3.9-4 "Analytical Model for Computing Transient Pressures and Forces in the S/RVDL," NEDE-23749-P, General Electric Company, February 1978.

3.9-5 "RVFORO4 User's Manual, S/RVDL Clearing Transient Pressures and Forces in the S/RVDL," NEDE-24695, General Electric Company, December 1979.

3.9-6 "BWR Fuel Channel Mechanical Design and Deflection," General Electric Company, NEDE-21354-P, September 1976.

3.9-7 "Fuel Assembly Evaluation of Combined Safe Shutdown Earthquake (SSE) and Loss-of-Coolant Accident (LOCA) Loadings," General Electric Company, NEDE-21175-3-P, July 1982.

3.9-8 Deleted.

3.9-9 "Assessment of Reactor Internals Vibration in BWR/4 and BWR/5 Plants," General Electric Company, NEDO-24057-P (Class I), and NEDE-24057-P (Class III), November 1977.

3.9-10 "Technical Basis for the Use of the Square-Root-of-the-Sum-of-the-Squares (SRSS) Method for Combining Dynamic Loads for Mark II Plants," General Electric Company, NEDE-24010-P, July 1977, with Supplement 1 (October 1978), Supplement 2 (December 1978), and Supplement 3 (August 1979).

3.9-11 "Methodology for Combining Dynamic Responses," NUREG-0484, Revision 1, NRC, May 1980.

3.9-12 Letter from Supply System to NRC, Subject: SRSS Combination of Dynamic Responses, Confirmatory Item No. 6 of NUREG-0892, GO2-83-090, dated February 3, 1983.

3.9-13 The American Institute of Steel Construction (AISC) Manual of Steel Construction, "Specification for the Design, Fabrication, and Erection of Structural Steel for Buildings."

3.9-14 "Design and Performance of G.E. BWR Jet Pumps," General Electric Company, Atomic Power Equipment Department, APED-5460, July 1968.

3.9-15 Moen, R. H., "Testing of Improved Jet Pumps for the BWR/6 Nuclear System," General Electric Company, Atomic Power Equipment Department, NEDO-10602, June 1972.

3.9-16 "Analytical Model for Loss-of-Coolant Analysis in Accordance with 10 CFR 50 Appendix K," General Electric Company, NEDO-20566-A, September 1986.

3.9-17 "WNP-2 Power Uprate Project NSSS Engineering Report," GE Nuclear Energy, GE-NE-208-17-0993, September 1993.

3.9-18 Bijlaard, P. P., Shell Stiffness Calculations, Welding Research Council Bulletin No. 107 (BSTIF01).

3.9-19 Deleted.

3.9-20 "Safety Evaluation Report, Jet Pump Slip Joint Clamp Repair, Columbia Generating Station (CGS)," GE Nuclear Energy, GENE 0000-0039-5566-R0, Revision 0, April 2005.

3.9-21 Deleted.

3.9-22 "General Electric Standard Application for Reactor Fuel," NEDE-24011-P-A and "Supplement for United States," NEDE-24011-P-A-US (most recent approved revision referenced in COLR).

Table 3.9-1

Plant Events
(For Nuclear Steam Supply System and Balance-of-Plant)

Conditions	Number of Cycles
Normal, upset, and testing	
Bolt up/unbolt[a,b]	60
Design pressure hydrostatic test[b]	65
Startup (100°F/hr heatup rate)[b,c]	250
Daily reduction to 75% power[a]	10,000
Weekly reduction to 50% power[a]	2000
Control rod pattern change[a]	400
Loss of feedwater heaters (80 cycles total)[b]	80
Operating basis earthquake event at rated operating conditions	10/50[d]
Scrams	
Turbine generator trip, feedwater on, isolation valves stay open[b]	60
Other scrams[b]	90
Loss of feedwater pumps, isolation valves closed[b]	20
Single safety or relief valve blowdown[b]	8
Reduction to 0% power, hot standby, shutdown (100°F/hr cooldown rate)[b,c]	250
High-pressure core spray operation (10), standby liquid control operation (10), low-pressure core spray operation (10), and low-pressure coolant injection operation (10)[b]	40
Emergency	
Scrams	
Reactor overpressure with delayed scram feedwater stays on, isolation valves stay open	1[e]

Table 3.9-1

Plant Events
(For Nuclear Steam Supply System and Balance-of-Plant) (Continued)

Conditions	Number of Cycles
Automatic blowdown	1[e]
Improper start of cold recirculation loop	1[e]
Sudden start of pump in cold recirculation loop	1[e]
Improper startup with reactor drain shutoff followed by turbine roll and increase to rated power	1[e]
Faulted	
Pipe rupture	1[e]
Safe shutdown earthquake at rated operating conditions	1[e]
ASME hydrostatic test	
1.25 x design pressure hydrostatic test ASME Section III, NB-6222 and NB-3114, allows up to 10 of these tests without stress calculation	No additional

[a] Applies to reactor pressure vessel only.

[b] Thermal cycles are tracked for indication of reactor cumulative fatigue usage.

[c] Bulk average vessel coolant temperature change in any 1-hr period.

[d] Includes 50 peak OBE cycles for NSSS piping and 10 peak OBE cycles for other NSSS equipment and components. Fifty peak OBE cycles are postulated for all BOP piping and components.

[e] The annual encounter probability of the one-cycle events is 10^{-2} for emergency and 10^{-4} for faulted events.

Table 3.9-2

Loading Combination and Acceptance Criteria
For ASME Code Class 1, 2, and 3
Piping and Equipment

INTRODUCTION

This table lists the major safety-related and selected important-to-safety mechanical components in the plant. Various parts of the table are referenced in Section 3.9. The format in certain sections of the table is changed since analytical methods and depth of detail necessary to demonstrate the safety aspects of various components are different. The ASME Code allowable stresses, loads or limits are shown in all cases. As a result of reanalysis and computer accuracy, the maximum listed stresses and loads may vary slightly from current calculations. The tabulated values are provided as a demonstration that the Code allowables have been met. Any reanalysis will assure that the allowable stresses, loads or limits are still met.

INDEX TO INDIVIDUAL COMPONENTS

Table		Page
3.9-2a	Reactor Pressure Vessel and Shroud Support Assembly	3.9-85
3.9-2b	Reactor Internals and Associated Equipment	3.9-89
3.9-2c	Deleted	
3.9-2d	ASME Code Class 1 Main Steam Piping and Pipe Mounted Equipment-Highest Stress Summary	3.9-95
3.9-2e	ASME Code Class 1 Recirculation Piping and Pipe Mounted Equipment- Highest Stress Summary	3.9-99
3.9-2f	Recirculation Flow Control Valve (24 in. - Neles/Jamesburg, Formerly Hammel-Dahl) (Kept in Mechanically Blacked Full Open Position)	3.9-103
3.9-2g	Safety/Relief Valves (Main Steam) Spring-Loaded, Direct Acting Type: ASME Code, Section III, July 1971	3.9-104
3.9-2h	Main Stream Isolation Valve	3.9-109
3.9-2i	Recirculation Pump	3.9-122

Table 3.9-2

Loading Combination and Acceptance Criteria
For ASME Code Class 1, 2, and 3
Piping and Equipment (Continued)

3.9-2j Reactor Recirculation System Gate Valves, 24 in. Discharge Structural and Mechanical Loading Criteria 3.9-127

3.9-2k Not Used 3.9-133

3.9-2L Standby Liquid Control Pump 3.9-134

3.9-2m Standby Liquid Control Tank 3.9-138

3.9-2n Emergency Core Cooling System Pumps 3.9-139

3.9-2o Residual Heat Removal Heat Exchanger 3.9-142

3.9-2p Reactor Water Cleanup Pump 3.9-146

3.9-2q Not Used 3.9-147

3.9-2r Reactor Core Isolation Cooling Pump 3.9-148

3.9-2s Reactor Refueling and Servicing Equipment 3.9-152

3.9-2t Not Used 3.9-155

3.9-2u Control Rod Drive (Indicator Tube) 3.9-156

3.9-2v Control Rod Drive Housing 3.9-157

3.9-2w Jet Pumps 3.9-158

3.9-2x Not Used 3.9-159

3.9-2y Low-Pressure Coolant Injection Coupling 3.9-160

3.9-2z Not Used 3.9-161

3.9-2aa Control Rod Guide Tube 3.9-162

3.9-2ab Incore Housing 3.9-163

3.9-2ac Reactor Vessel Support Equipment 3.9-164

Table 3.9-2

Loading Combination and Acceptance Criteria
For ASME Code Class 1, 2, and 3
Piping and Equipment (Continued)

GE SCOPE OF SUPPLY

Load Combination SRSS[a]	Design Basis	Evaluation Basis
$N + SRV_{(ALL)}$	Upset	Upset (B)
N + OBE	Upset	Upset (B)
$N + [OBE^2 + SRV^2_{(ALL)}]^{1/2}$	Emergency	Upset (B)
$N + [SSE^2 + SRV^2_{(ALL)}]^{1/2}$	Faulted	Faulted[b] (D)
$N + [SBA^2 + SRV^2]^{1/2}$	Emergency	Emergency[b] (C)
$N + [IBA^2 + SRV^2]^{1/2}$	Faulted	Faulted[b] (D)
$N + [SBA^2 + SRV^2_{(ADS)}]^{1/2}$	Emergency	Emergency[b] (C)
$N + [SBA^2 + OBE^2 + SRV^2_{(ADS)}]^{1/2}$	Faulted	Faulted[b] (D)
$N + [IBA^2 + OBE^2 + SRV^2_{(ADS)}]^{1/2}$	Faulted	Faulted[b] (D)
$N + [SBA^2/IBA^2 + SSE^2 + SRV^2_{(ADS)}]^{1/2}$	Faulted	Faulted[b] (D)
$N + [^cLOCA^2 + SSE^2]^{1/2}$	Faulted	Faulted[b] (D)

Table 3.9-2

Loading Combination and Acceptance Criteria
For ASME Code Class 1, 2, and 3
Piping and Equipment (Continued)

BALANCE-OF-PLANT[d]

Load Cases	SRSS Load Combinations[e,f,g]	Design Assessment Acceptance Criteria
1	$P + DW$	Normal (A)
2	$N + [OBE^2 + SRV^2_{ONE}]^{1/2}$	Upset (B)
3	$N + [OBE^2 + SRV^2_{TWO}]^{1/2}$	Upset (B)
4	$N + [OBE^2 + SRV^2_{ALL}]^{1/2}$	Upset (B)
5	$N + [OBE^2 + SRV^2_{ADS} + SBA^2]^{1/2}$	Emergency[b] (C)
6	$N + [OBE^2 + SRV^2_{TWO} + SBA^2]^{1/2}$	Emergency[b] (C)
7	$N + [SSE^2 + SRV^2_{ADS} + SBA^2/IBA^2]^{1/2}$	Faulted[b] (D)
8	$N + [SSE^2 + SRV^2_{TWO} + SBA^2/IBA^2]^{1/2}$	Faulted[b] (D)
9	$N + [SSE^2 + SRV^2_{ONE}]^{1/2}$	Faulted[b] (D)
10	$N + [SSE^2 + SRV^2_{TWO}]^{1/2}$	Faulted[b] (D)
11	$N + [SSE^2 + SRV^2_{ALL}]^{1/2}$	Faulted[b] (D)
12	$N + [SSE^2 + DBA^2]^{1/2}$	Faulted[b] (D)

LEGEND

N — Normal (and abnormal loads depending on acceptance criteria) include internal pressure (P) and dead weight (DW).

OBE — Operating basis earthquake loads.

SSE — Safe shutdown earthquake loads.

Table 3.9-2

Loading Combination and Acceptance Criteria
For ASME Code Class 1, 2, and 3
Piping and Equipment (Continued)

SRV	Safety/relief valve discharge induced loads from two adjacent valves (one valve actuated when adjacent valve is cycling).
SRV_{TWO}	Safety/relief valve discharge induced loads from two adjacent valves. (This load is conservatively enveloped by the SRV_{ONE} case.)
SRV_{ALL}	The loads induced by actuation of all safety/relief valves which activate within msec of each other (e.g., turbine trip operational transient). (This load is the largest of the axisymmetric and nearly symmetric all valve loading conditions.)
SRV_{ADS}	The loads induced by actuation of safety/relief valves associated with the automatic depressurization system which actuate within msec of each other during the postulated small or intermediate size pipe rupture. (This load is conservatively taken as the SVR_{ALL} case.)
SRV_{ONE}	The loads induced by the actuation of one safety/relief valve.
$LOCA^{c}$	The loss-of-coolant accident associated with the postulated pipe rupture of large pipes (e.g., main steam, feedwater, recirculation piping).
$LOCA_1$	Pool swell drag/fallout loads on piping and components located between the main vent discharge outlet and the suppression pool water upper surface.
$LOCA_2$	Pool swell impact loads on piping and components located above the suppression pool water upper surface.
$LOCA_3$	Oscillating pressure induced loads on submerged piping and components during condensation oscillations.
$LOCA_4$	Building motion induced loads from chugging.
$LOCA_5$	Building motion induced loads from main vent air clearing.
$LOCA_6$	Vertical and horizontal loads on main vent piping.
$LOCA_7$	Annulus pressurization loads.
SBA	The abnormal transients associated with a small break accident.

Table 3.9-2

Loading Combination and Acceptance Criteria
For ASME Code Class 1, 2, and 3
Piping and Equipment (Continued)

IBA The abnormal transients associated with an intermediate break accident.

DBA The abnormal transients associated with a design basis break accident.

[a] Square root of the sum of the squares (SRSS) combination of dynamic loads.

[b] All ASME Code Class 1, 2, and 3 piping systems which are required to function for safe shutdown under the postulated events shall meet the requirements of NRC's memorandum, "Evaluation of Topical Report - Piping Functional Capability Criteria," dated July 17, 1980.

[c] The most limiting case of load combination among $LOCA_1$ through $LOCA_7$

[d] Equipment includes pumps, valves, supports, and vessels.

[e] All dynamic loads are combined using the SRSS method and the results are added to the static loads. As an analysis option the simpler but more conservative absolute sum method was used in some load evaluations.

[f] As required by the appropriate subsection, i.e., NB, NC, or ND of ASME Code Section III, Division 1; other loads, such as thermal transient, thermal gradients, and anchor points displacement portion of the OBE or SRV may require consideration in addition to those primary stress-producing loads listed.

[g] SBA, IBA, and DBA include all event-induced loads, as applicable, such as chugging, pool swell, drag loads, annulus pressurization, etc.

Table 3.9-2a

Reactor Pressure Vessel and Shroud Support Assembly
(i) Vessel Support Skirt

ASME B&PV Code Section III Primary Stress Limit Criteria	Loading	Primary Stress Type	Allowable Stress (psi)	Maximum Calculated Stress (psi)
Material: SA 533 GR. B CL #1				
A. Normal and upset condition:				
$P_m \leq Sm$	1. Normal loads	Primary membrane	26,700	19,911
$Sm = 26,700$ @ 575°F	2. Upset pressure			
$P_L + P_b \leq 1.5\ Sm$	3. Operating basis earthquake	Primary membrane plus bending	40,050	28,369
$1.5\ Sm = 40,050$ @ 575°F	4. Safety/relief valve			
B. Emergency condition:				
$P_m \leq Sy$	1. Normal loads	Primary membrane	42,300	39,245[a]
$Sy = 42,300$ @ 575°F	2. Upset pressure			
$P_L + P_b \leq 1.5\ Sy$	3. Operating basis earthquake	Primary membrane plus bending	63,450	56,485[a]
$1.5\ Sy = 63,450$ @ 575°F	4. Safety/relief valve			
C. Faulted condition:				
$P_m \leq Sy$	1. Normal loads	Primary membrane	42,300[b]	39,245
$Sy = 42,300$ @ 575°F	2. Faulted pressure			
$P_L + P_b \leq 1.5\ Sy$	3. Chugging	Primary membrane plus bending	63,450[b]	56,485
$1.5\ Sy = 63,450$ @ 575°F	4. Safety/relief valve (ADS)			
	5. Safe shutdown earthquake			
D. Maximum cumulative usage factor: 0.097 at skirt-base junction				

[a] Calculated stresses under faulted loading (greater than emergency loading).

[b] Allowable stresses under emergency loading (less than faulted loading).

Table 3.9-2a

Reactor Pressure Vessel and Shroud Support Assembly (Continued)
(ii) Shroud Support

ASME B&PV Code Section III Primary Stress Limit Criteria	Loading	Primary Stress Type	Allowable Stress (psi)	Maximum Calculated Stress (psi)
Material: Inconel				
A. Normal and upset condition:				
$P_m \leq Sm$	1. Normal loads	Primary membrane	23,300	16,890
$Sm = 23{,}300$ @ 575°F	2. Upset pressure			
$P_L + P_b \leq Sy$	3. Operating basis earthquake	Primary membrane plus bending	28,100	25,540
$Sy = 28{,}100$ @ 575°F	4. Safety/relief valve			
B. Emergency condition:				
$P_m \leq Sy$	1. Normal loads	Primary membrane	28,100	23,000
$Sy = 28{,}100$ @ 575°F	2. Upset pressure			
$P_L + P_b \leq 1.5\ Sy$	3. Chugging	Primary membrane plus bending	42,150	33,880
$1.5\ Sy = 42{,}150$ @ 575°F	4. Safety/relief valve (ADS)			
C. Faulted condition:				
$P_m \leq Sy$	1. Normal loads	Primary membrane	28,100	23,000
$Sy = 28{,}100$ @ 575°F	2. Faulted pressure			
$P_L + P_b \leq 1.5\ Sy$	3. Chugging	Primary membrane plus bending	42,150	33,880
$1.5\ Sy = 42{,}150$ @ 575°F	4. Safety/relief valve (ADS)			
	5. Safe shutdown earthquake			
D. Maximum cumulative usage factor: 0.583 at shroud support plate				

Table 3.9-2a

Reactor Pressure Vessel and Shroud Support Assembly (Continued)
(iii) Reactor Pressure Vessel, Feedwater Nozzle

ASME B&PV Code Section III Primary Stress Limit Criteria	Loading	Primary Stress Type	Allowable Stress (psi)	Maximum Calculated Stress (psi)
Material: Inconel				
A. Normal and upset condition:				
$P_m \leq Sm$	1. Normal loads	Primary membrane	23,300	13,848
$Sm = 23,300 @ 575°F$	2. Upset pressure			
$P_L + P_b \leq Sy$	3. Operating basis earthquake	Primary membrane plus bending	35,000	15,120
$1.5\ Sm = 35,900 @ 575°F$	4. Safety/relief valve			
B. Emergency condition:				
$P_m \leq 1.2\ Sm$	1. Normal loads	Primary membrane	27,960	17,719
$1.2\ Sm = 27,960 @ 575°F$	2. Upset pressure			
$P_L + P_b \leq 1.5\ Sy$	3. Chugging	Primary membrane plus bending	42,000	20,060
$1.5\ Sy = 42,000 @ 575°F$	4. Safety/relief valve (ADS)			
C. Faulted condition:				
$P_m \leq 1.2\ Sm$	1. Normal loads	Primary membrane	27,960	17,719
$1.2\ Sm = 27,960 @ 575°F$	2. Faulted pressure			
$P_L + P_b \leq 1.5\ Sy$	3. Jet reaction	Primary membrane plus bending	42,000	33,610
$1.5\ Sy = 42,000 @ 575°F$	4. Annulus pressurization			
	5. Safe shutdown earthquake			
D. Maximum cumulative usage factor: 0.088 at thermal sleeve to safe end				

Table 3.9-2a

Reactor Pressure Vessel and Shroud Support Assembly (Continued)
(iv) Control Rod Drive Penetration

ASME B&PV Code Section III Primary Stress Limit Criteria	Loading	Primary Stress Type	Allowable Stress (psi)	Maximum Calculated Stress (psi)
Material: Inconel SB157 (stub tube)				
A. Normal and upset condition:				
$P_m \leq Sm$	1. Normal loads	Primary membrane	16,650	2,099[a]
$Sm = 16,650 @ 550°F$	2. Upset pressure			
$P_L + P_b \leq Sy$	3. Operating basis earthquake	Primary membrane plus bending	24,100	16,893[a]
$Sy = 24,100 @ 550°F$	4. Safety/relief valve			
B. Emergency condition:				
$P_m \leq 1.2\ Sm$	1. Normal loads	Primary membrane	19,980	2,099
$1.2\ Sm = 19,980 @ 550°F$	2. Upset pressure			
$P_L + P_b \leq 1.5\ Sy$	3. Operating basis earthquake	Primary membrane plus bending	36,150	16,893
$1.5\ Sy = 35,150 @ 550°F$	4. Safety/relief valve			
C. Faulted condition:				
$P_m \leq 1.2\ Sm$	1. Normal loads	Primary membrane	19,980[b]	7,623
$1.2\ Sm = 19,980 @ 550°F$	2. Faulted pressure			
$P_L + P_b \leq 1.5\ Sy$	3. Jet reaction	Primary membrane plus bending	36,150[b]	31,996
$1.5\ Sy = 35,150 @ 550°F$	4. Scram			
	5. Safe shutdown earthquake			
D: Maximum cumulative usage factor: 0.275 at CRD housing				

[a] Calculated stresses under faulted loading (greater than normal and upset loading).
[b] Allowable stresses under emergency loading (less than faulted loading).

Table 3.9-2b

Reactor Internals and Associated Equipment
(i) Top Guide - Highest Stressed Beam

ASME B&PV Code Section III Primary Stress Limit Criteria	Loading	Primary Stress Type	Allowable Stress (psi)	Maximum Calculated Stress (psi)
Material: 304 Stainless Steel				
A. Normal and upset condition:				
$P_m \leq Sm$	1. Normal loads	Primary membrane	16,900	819
$Sm = 16,900 @ 550°F$	2. Upset pressure			
$P_L + P_b \leq 1.5 Sm$	3. Operating basis earthquake	Primary membrane plus bending	31,690[a]	28,548
$1.5 Sm = 25,350 @ 550°F$	4. Safety/relief valve			
B. Emergency condition:				
$P_m \leq 1.2 Sm$	1. Normal loads	Primary membrane	20,280	318
$1.2 Sm = 20,280 @ 550°F$	2. Upset pressure			
$P_L + P_b \leq 1.8 Sm$	3. Chugging	Primary membrane plus bending	30,420	26,638
$1.8 Sm = 30,420 @ 550°F$	4. Safety/relief valve			
C. Faulted condition:				
$P_m \leq 2.4 Sm$	1. Normal loads	Primary membrane	40,560	900
$2.4 Sm = 40,560 @ 550°F$	2. Upset pressure			
$P_L + P_b \leq 3.0 Sm$	3. Safety/relief valve (ADS)	Primary membrane plus bending	50,700	35,919
$3.0 Sm = 50,700 @ 550°F$	4. Safe shutdown earthquake			
D. Maximum cumulative usage factor: 0.1625 at longest beam slot				

[a] Includes a factor of 1.25 as a result of certified yield strength test data.

Table 3.9-2b

Reactor Internals & Associated Equipment (Continued)
(ii) Core Plate (Ligament In Top Plate)

ASME B&PV Code Section III Primary Stress Limit Criteria	Loading	Primary Stress Type	Allowable Stress (psi)	Maximum Calculated Stress (psi)
Material: 304 Stainless Steel				
A. Normal and upset condition:				
$P_m \leq Sm$	1. Dead weight	Primary membrane	16,900	4,830
$Sm = 16,900 @ 550°F$	2. Pressure			
$P_L + P_b \leq 1.5 Sm$	3. Operating basis earthquake	Primary membrane plus bending	25,350	13,980
$1.5 Sm = 25,350 @ 550°F$	4. Safety/relief valve			
B. Emergency condition:				
$P_m \leq 1.2 Sm$	1. Normal loads	Primary membrane	20,280	1,630
$1.2 Sm = 20,280 @ 550°F$	2. Pressure			
$P_L + P_b \leq 1.8 Sm$	3. SBA (chugging)	Primary membrane plus bending	30,420	12,080
$1.8 Sm = 30,420 @ 550°F$	4. Safety/relief valve			
C. Faulted condition:				
$P_m \leq 2.4 Sm$	1. Dead weight	Primary membrane	40,560	5,330
$2.4 Sm = 40,560 @ 550°F$	2. Pressure			
$P_L + P_b \leq 3.0 Sm$	3. Loss-of-coolant accident	Primary membrane plus bending	50,700	20,600
$3.0 Sm = 50,700 @ 550°F$	4. Safety/relief valve			
	5. Safe shutdown earthquake			
D. Maximum cumulative usage factor: 0.005 at stiffener-rim junction				

Table 3.9-2b

Reactor Internals & Associated Equipment (Continued)
(iii) Differential Pressure & Liquid Control Lines

ASME B&PV Code Section III Primary Stress Limit Criteria	Loading	Primary Stress Type	Allowable Stress (psi)	Maximum Calculated Stress (psi)
Material: 304 stainless steel				
A. Normal and upset condition: $P_m \leq Sm$ $Sm = 16,400 @ 550°F$ $P_L + P_b + Q_m + Q_b \leq 3 Sm$ $3.0 Sm = 49,200 @ 550°F$	1. Dead weight 2. Upset pressure 3. Safety/relief valve	Primary membrane plus bending and secondary membrane plus bending	49,200	42,725
B. Emergency condition: $P_m \leq 1.2 Sm$ $1.2 Sm = 19,680 @ 550°F$ $P_L + P_b \leq 1.8 Sm$ $1.8 Sm = 29,520 @ 550°F$	1. Normal loads 2. Upset pressure 3. Operating basis earthquake 4. Safety/relief valve	Primary membrane plus bending	29,520	17,015
C. Faulted condition: $P_m \leq 2.4 Sm$ $2.4 Sm = 39,360 @ 550°F$ $P_L + P_b \leq 3.0 Sm$ $3.0 Sm = 49,200 @ 550°F$	1. Normal loads 2. Faulted pressure 3. Jet reaction 4. Annulus pressurization 5. Safe shutdown earthquake	Primary membrane plus bending	49,200	21,664

Table 3.9-2b

Reactor Internals & Associated Equipment (Continued)
(iv) Vessel Head Spray Nozzle

ASME B&PV Code Section III Primary Stress Limit Criteria	Loading	Limiting Stress Type	Allowable Stress (psi)	Calculated Stress (psi)
A. Normal and upset condition: S_m @ 575°F = 17.7 k/psi S_u @ 575°F = 60.0 Ksi S_{limit} = 3.0 S_m	1. Normal loads 2. Normal pressure 3. Operating basis earthquake	Primary membrane plus bending and secondary membrane plus bending	53,100	31,357
B. Emergency condition: S_m @ 575°F = 17.7 k/psi S_u @ 575°F = 60.0 Ksi S_{limit} = 1.5 (0.7 S_u)	1. Normal loads 2. Upset pressure 3. Operating basis earthquake 4. Safety/relief valve	Primary membrane plus bending	31,900	17,713
C: Faulted condition:[a] S_m @ 575°F = 17.7 k/psi S_u @ 575°F = 60.0 Ksi S_{limit} = 1.5 (0.7 S_u)	1. Normal loads 2. Faulted pressure 3. Chugging 4. Safety/relief valve (ADS) 5. Safe shutdown earthquake OR 1. Normal loads 2. Faulted pressure 3. Jet reaction 4. Annulus pressurization 5. Safe shutdown earthquake	Primary membrane plus bending	63,000	27,840

[a] Calculated faulted stress value is the maximum stress resulting from either of the two faulted loading conditions.

Table 3.9-2b

Reactor Internals & Associated Equipment (Continued)
(v) GE Fuel Assembly (Including Channel)

Acceptance Criteria	Loading	Primary Load Type	Calculated Peak Acceleration	Evaluation Basis Acceleration
Acceleration envelope	Horizontal direction: 1. Peak pressure 2. Safe shutdown earthquake 3. Annulus pressurization	Horizontal acceleration profile	1.5g	(1)
	Vertical direction: 1. Peak pressure 2. Safe shutdown earthquake 3. Safety/relief valve 4. Chugging	Vertical accelerations	6.82g (4)	(1)

Notes:

1. Evaluation basis accelerations and evaluations are contained in Reference 3.9-7.
2. The calculated maximum fuel assembly gap opening for the most limiting load combination is 0.25[(4)] in.
3. The fatigue analysis indicates that the fuel assembly has adequate fatigue capability to capability to withstand the loadings resulting from multiple SRV actuations and the OBE+SRV event.
4. These values are determined using the methodology contained in Reference 3.9-7.

Table 3.9-2c

Deleted

Table 3.9-2d

ASME Code Class 1 Main Steam Piping and Pipe Mounted Equipment - Highest Stress Summary

Acceptance Criteria	Limiting Stress Type	Calculated Stress or Usage Factor	Allowable Limits	Ratio Actual/ Allowable	Loading	Identification of Locations of Highest Stress
ASME B&PV Code Section III, NB-3650						
Design Condition:					1. Pressure 2. Weight	At sweepolet (steam line D)
Eq. 9 $\leq$ 1.5 S_m	Primary	20,156 psi	26,550 psi	0.76	3. Operating basis earthquake	
Service levels A & B (normal and upset) condition:					1. Pressure 2. Weight 3. Operating transient 4. Operating basis earthquake	At sweepolet (steam line B)
Eq. 12 $\leq$ 3.0 S_m	Secondary	45,949 psi	53,100 psi	0.87		
Service levels A & B (normal and upset) condition:	Primary plus secondary (except thermal				1. Pressure 2. Weight 3. Operating basis earthquake 4. Operating transient	At sweepolet (steam line B)
Eq. 13 $\leq$ 3.0 S_m	expansion)	50,915 psi	53,100 psi	0.96		
Service levels A & B (normal and upset) condition:					1. Pressure 2. Weight 3. Operating basis earthquake 4. Operating transient	At sweepolet (steam line B)
Cumulative usage factor:	N/A	0.770	1.0			

Table 3.9-2d

ASME Code Class 1 Main Steam Piping and Pipe Mounted Equipment - Highest Stress Summary (Continued)

Acceptance Criteria	Limiting Stress Type	Calculated Stress (psi)	Allowable Stress Limits (psi)	Ratio Actual/ Allowable	Loading	Identification of Locations of Highest Stress
Service level B (upset) condition: Eq. 9 $\leq$ 1.8 S_m & 1.5 S_y	Primary	24,152	31,860	0.76	1. Pressure 2. Weight 3. Operating basis earthquake 4. Operating transient	At sweepolet (steam line B)
Service level C (emergency) condition: Eq. 9 $<$ 2.25 S_m & 1.8 S_y	Primary	22,441	39,825	0.56	1. Pressure 2. Weight 3. Operating transient 4. Small break accident	At sweepolet (steam line D)
Service level D (faulted) condition: Eq. 9 $<$ 3.0 S_m	Primary	30,780	53,100	0.58	1. Pressure 2. Weight 3. Safe shutdown earthquake 4. Loss-of-coolant accident	At sweepolet (steam line B)

Table 3.9-2d

ASME Code Class 1 Main Steam Piping and Pipe Mounted Equipment - Highest Stress Summary (Continued)

Component/Load Type	Highest Calculated Load (lb)	Allowable Load (lb)	Ratio Calculated/ Allowable	Loading	Identification of Equipment with Highest Loads
Snubber/level B	35,352	120,000	0.30	1. Pressure 2. Weight 3. Operating basis earthquake 4. Operating transients	MS-SC-1 Line C
Snubber/level C	49,559	160,000	0.31	1. Pressure 2. Weight 3. Small break accident 4. Associated operating transients	MS-SC-2 Line C
Snubber/level D	51,296	190,000	0.27	1. Pressure 2. Weight 3. Intermediate break accident 4. Safe shutdown earthquake 5. Associated operating transients	MS-SC-2 Line C

Table 3.9-2d

ASME Code Class 1 Main Steam Piping and Pipe Mounted Equipment - Highest Stress Summary (Continued)

Component/Load Type	Highest Calculated Load (lb)	Allowable Load (lb)	Ratio Calculated/ Allowable	Loading	Identification of Equipment with Highest Loads
Safety/relief valves (SRV)					
Horizontal acceleration	3.02g	5.2g	0.58	1. Pressure 2. Weight 3. Safe shutdown earthquake 4. Loss-of-coolant accident	SRV 4B line B
Vertical acceleration	1.55g	4.4g	0.35	1. Pressure 2. Weight 3. Safe shutdown earthquake 4. Loss-of-coolant accident	SRC 5C line C
Main steam isolation valve (MSIV)					
Level B - moment	1960 in.-Kips	28,750 in.-Kips	0.07	1. Pressure 2. Weight 3. OBA 4. Operating transients	Nozzle line D
Level C - moment	2287 in.-Kips	28,750 in.-Kips	0.08	1. Pressure 2. Weight 3. Operating transients 4. Small break accident	Nozzle line D
Level D - moment	2395 in.-Kips	28,750 in.-Kips	0.08	1. Pressure 2. Weight 3. Operating transients 4. Safe shutdown earthquake 5. Loss-of-coolant accident	Nozzle line D

Table 3.9-2e

ASME Code Class 1 Recirculation Piping and Pipe Mounted Equipment - Highest Stress Summary

Acceptance Criteria	Limiting Stress Type	Calculated Stress or Usage Factor	Allowable Limits	Ratio Actual/ Allowable	Loading	Identification of Locations of Highest Stress Points
ASME B&PV Code Section III, NB-3650						
Design condition:					1. Pressure 2. Weight	RHR supply Loop A
Eq. 9≤ 1.5 S_m	Primary	15,353 psi	25,013 psi	0.61	3. OBE	Node 327
Service levels A & B (normal and upset) condition:					1. Pressure 2. Weight 3. OBE 4. Operating	Header sweepolet Loop A Node 082
Eq. 12 ≤ 3.0 S_m	Secondary	33,470 psi	50,025 psi	0.67	transients	
Service levels A & B (normal and upset) condition:	Primary plus secondary (except thermal expansion)				1. Pressure 2. Weight 3. OBE 4. Operating	Discharge Beyond Valve Loop B Node 120
Eq. 13 ≤ 3.0 S_m		35,810 psi	50,025 psi	0.72	transients	
Service levels A & B (normal and upset) condition:						
Cumulative usage factor	N/A	0.39	1.0	0.39		Header sweepolet Loop A Node 082

Table 3.9-2e

ASME Code Class 1 Recirculation Piping and Pipe Mounted Equipment - Highest Stress Summary (Continued)

Acceptance Criteria	Limiting Stress Type	Calculated Stress or Usage Factor	Allowable Limits	Ratio Actual/ Allowable	Loading	Identification of Locations of Highest Stress Points
Service level B (upset) condition: Eq. 9 ≤ 1.8 S_m & 1.5 S_y	Primary	25,545 psi	28,200	0.91	1. Pressure 2. Weight 3. Operating basis earthquake 4. Operating transients	RHR TEE Loop A Node 322
Service level C (emergency) condition: Eq. 9 ≤ 2.25 S_m & 1.8 S_y	Primary	22,426 psi	33,840	0.66	1. Pressure 2. Weight 3. Operating transients 4. Small break accident	RHR TEE Loop A Node 322
Service level D (faulted) condition: Eq. 9 ≤ 3.0 S_m & 2.0 S_y	Primary	28,249 psi	37,600	0.75	1. Pressure 2. Weight 3. Loss-of-coolant accident 4. Safe shutdown earthquake	RHR TEE Loop A Node 322

Table 3.9-2e

ASME Code Class 1 Recirculation Piping and Pipe Mounted Equipment - Highest Stress Summary (Continued)

Component/ Load Type	Highest Calculated Load	Allowable Load	Ratio Calculated Allowable	Identification of Equipment with Highest Loads
Suction gate valve				
- Moment (in.-lb)	773,261	3,146,380	0.25	Body C.G. Loop A
Discharge gate valve				
- Moment (in.-lb)	326,189	1,000,000	0.33	Body C.G. Loop B
Recirculation pump				
- Horizontal acceleration	2.25g	4.5g	0.50	Motor C.G. Loop A
- Vertical acceleration	0.76g	3.5g	0.22	Motor C.G. Loop B
Flow control valve (mechanically blocked open)				
- Horizontal acceleration	2.0g	9.0g	0.22	Operator Loop A
- Vertical acceleration	1.3g	6.0g	0.22	Operator Loop B

Table 3.9-2e

ASME Code Class 1 Recirculation Piping and Pipe Mounted Equipment - Highest Stress Summary (Continued)

Component/Load Type	Highest Calculated Load (lb)	Allowable Load (lb)	Ratio Calculated Allowable	Loading	Identification of Equipment with Highest Loads
Snubber/level B	53,009	120,000	0.44	1. Pressure 2. Weight 3. Operating basis earthquake 4. Operating transients	SB6 Loop B
Snubber/level C	30,490	159,600	0.19	1. Pressure 2. Weight 3. Small break accident 4. Associated operating transients	SA6 Loop A
Snubber/level D	57,001	180,000	0.32	1. Pressure 2. Weight 3. Loss-of-coolant accident 4. Safe shutdown earthquake 5. Associated operating transients	SB6 Loop B

Table 3.9-2f

Recirculation Flow Control Valve
(24 in. - Neles/Jamesburg, Formerly Hammel-Dahl)
(Kept in Mechanically Blocked Full Open Position)

	Criteria	Method of Analysis	Allowable Value	Analytically Determined Value
1.	Body primary stress	Per Subarticle NB-3500 of the ASME Code, Section III	19,600 psi	17,286 psi
2.	Body to top housing flange joint at maximum stress point	Per Subarticle NB-3500 of the ASME Code, Section III	28,650 psi	24,910 psi[a]
3.	Housing to bonnet flange joint at maximum stress point	Per Subarticle, NB-3500 of the ASME Code, Section III	28,650 psi	2,934 psi[a]
4.	Body to bottom cover joint at maximum stress point	Per Subarticle NB-3500 of the ASME Code, Section III	N/A	N/A
5.	Top housing to top cover joint at maximum stress point	Per Subarticle NB-3500 of the ASME Code, Section III	28,650 psi	22,230 psi[a]
6.	Body minimum wall	Per Subarticle NB-3541 of the ASME Code, Section III	2.417 in.	2.437 in.

[a] Flow control valve accelerations on Table 3.9-2e have been reduced, therefore these stresses will be reduced as well.

Table 3.9-2g

Safety/Relief Valves (Main Steam) Spring-Loaded, Direct Acting Type
ASME Code, Section III, July 1971

Topic	Method of Analysis	Crosby 6-R-10 Analysis	Allowable Value	Calculated
Body inlet and outlet flange stresses	$S_H = \frac{fMo}{Lg_2^1B} + \frac{Pb}{4g_o} < 1.5\ Sm$ $S_R = \frac{(4te/3+1)Mo}{Lt^2B} < 1.5\ Sm$ $S_T = \frac{YMo}{t^2b} - ZS_R < 1.5\ Sm$ where: S_H = Longitudinal "hub" wall stress, psi S_R = Radial "flange" (body, base, inlet) S_T = Tangential "flange" stress, psi	$\frac{fMo}{Lg_1^2B} + \frac{PbB}{4g_1} Pb(Crosby) + P\ (Codes)$ $\frac{(4te/3+1)Mo}{Lt^2J;} g_1(Crosby) = g_o, g_1(Codes)$ $\frac{YMo}{t^2b} - ZS_R\ J(Crosby) = B(Codes)$ Material: A-105, Grade II Inlet: Sm @ 575°F = 18,200 psi Outlet: Sm @ 500°F = 19,400 psi	1.5 Sm = 27,300 psi (inlet) and = 29,000 psi (outlet)	Inlet: S_H = 1.2 Sm = 0.8 (allowable) S_R = 0.3 Sm = 0.2 (allowable) S_T = 1.4 Sm = 0.92 (allowable) Outlet S_H = 0.82 Sm = 0.55 (allowable) S_R = 0.99 Sm = 0.66 (allowable) S_T = 0.27 Sm = 0.18 (allowable)
Inlet and outlet stud area requirement	Total cross-sectional area shall exceed the greater of: $Am_1 = \frac{Wm_1}{Sb}$ $Am_1 = \frac{Wm_1}{Sb}$, or $AM_2 = \frac{Wm_2}{Sa}$ $Am_2 = \frac{Wm_2}{Sa}$ where: Am_1 = total required bolt (stud) area for operation condition. Am_2 = total required bolt (stud) area for gasket seating.		Inlet: Am_1 (Am_2) Outlet: Am_1 (Am_2)	Inlet: Am (actual)/(required minimum) = 1.61 Outlet: Am (actual)/(required minimum) = 2.0

Table 3.9-2g

Safety/Relief Valves (Main Steam) Spring-Loaded, Direct Acting Type (Continued)
ASME Code, Section III, July 1971

Topic	Method of Analysis	Crosby 6-R-10 Analysis	Allowable Value	Calculated
Nozzle wall thickness	1. Valve Wall thickness Criterion: $t_{minimum} < t_A$ where: $t_{minimum}$ = minimum calculated thickness requirement, including corrosion allowance. t_A = Actual nozzle wall thickness. (NOTE: This $t_{minimum}$ is t_m per notation of the codes.)	Thin section near valve seat: $t_{m_{1-1}} < t_{a_{1-1}}$ Section at about middle of nozzle: $t_{m_{2-2}} < t_{a_{2-2}}$	$t_{m_{1-1}} =$ $t_{m_{2-2}} =$ 0.468 in. Actual thickness greater than t_m at the section under consideration.	$t_{a_{1-1}} = 1.2\,(t_{m_{1-1}})$ $t_{a_{2-2}} = 1.3\,(t_{m_{2-2}})$
	2. Cyclic Rating: $\frac{\text{Thermal}}{It = \sum \frac{Nri}{Ni}}$	$It = \sum \frac{Nri}{Ni} (i = 1, 2, \& \ 3)$	It (max.) < 1	It = 0.093 (= 0.093 (It max.))
	Fatigue Na > 2000 cycles, as based on Sa, where Sa is defined as the larger of $SP_1 = (2/3)Q_P + \frac{P_{eb}}{2} + Q_{T_2} + 1.30Q_{T_1}$ (Uses same notation as codes) $SP_2 = 0.4\,Q_P + \frac{K}{2} + (P_{eb} + 2Q_{T_2})$	Na ≥ 2000 cycles, as based on SP, where SP (Crosby) = Sa (Codes)	Na ≥ 2000 cycles	Na (based on SP = SP_1) > 10^6 cycles: satisfies criterion

Table 3.9-2g

Safety/Relief Valves (Main Steam) Spring-Loaded, Direct Acting Type (Continued)
ASME Code, Section III, July 1971

Topic	Method of Analysis	Crosby 6-R-10 Analysis	Allowable Value	Calculated
Nozzle wall thickness (continued)	Fatigue (continued) where: SP_1 = Fatigue stress intensity at inside surface of crotch, psi. SP_1 = Fatigue stress intensity at outside surface of crotch, psi.			
Bonnet flange strength	$S_H = \frac{fMo}{Lg_1^2B} + \frac{PB}{4g_o} < 1.5Sm$ $S_R = \frac{(4te/3+1)Mo}{Lt^2B} < 1.5Sm$ $S_T = \frac{YMo}{t^2B} - ZS_R < 1.5Sm$	$\frac{fMo}{Lg_1^2B} + \frac{P_BB}{4g_1}$ $\frac{(4te/3+1)Mo}{LT^2B}$ $\frac{YMo}{t^2B} - ZS_R$	1.5 Sm (for maximum S_H' S_R' S_T) P_B (Crosby) = PC(Codes) = 29,100 psi g_1(Crosby) = g_0g_1,(Codes)	S_H = 1.47 Sm = 0.98 (allowable) S_R = 0.45 Sm = 0.3 (allowable) S_T = 0.46 Sm = 0.31 (allowable)
	where: S_H = Longitudinal "hub" wall stress, psi. S_R = Radial "flange" stress, psi. ST = Tangential "flange" stress, psi.	Material: A-105, Grade II Sm at 500 °F = 19,400 psi		

Table 3.9-2g

Safety/Relief Valves (Main Steam) Spring-Loaded, Direct Acting Type (Continued)
ASME Code, Section III, July 1971

Topic	Method of Analysis	Crosby 6-R-10 Analysis	Allowable Value	Calculated
Bonnet stud area requirements	Total cross-sectional area shall exceed the greater of: $Am_1 = \frac{Wm_1}{Sb}$, or $Am_2 = \frac{Wm_2}{Sa}$ where Am_1 = Total required bolt (stud) area for operating condition. Am_2 = Total required bolt (stud) area for gasket seating.	$Am_1 = \frac{WM_1}{S_b}$ $Am_2 = \frac{Wm_2}{Sa}$	Am_1 ($> Am_2$)	Am (actual) = 1.4 (required minimum)
Disc insert	Part No. N97499 (Valve Dwg. DS-A-63790-3) Method of Analysis: Algor SUPERSAP (finite element) Computer Program, SSAP0. Due to the complex geometrical shape of the 6R10 HB-BP-DF disc insert, a finite element computer model of the disc was constructed as follows: A half cross section two dimensional axisymmetric model was selected to represent the disc insert, since it is axisymmetric in shape, loading, and restraint about the vertical centerline. The most severe loading condition, “the valve is unpressurized with the spring compressed to establish valve set load” was compared with the lowest allowable stress intensity (at design temperature 575°F).			

Table 3.9-2g

Safety/Relief Valves (Main Steam) Spring-Loaded, Direct Acting Type (Continued)
ASME Code, Section III, July 1971

Topic	Method of Analysis	Crosby 6-R-10 Analysis	Allowable Value	Calculated
Disc insert (continued)	Part No. N97499 (Valve Dwg. DS-A-63790-3) Where: P_{SET} = Set Pressure, 1250 psig F_{SET} = Set Load, 24,950 lb a = ½ disc insert undercut diameter, 2.782 in. t = Design minimum thickness, 0.616 in. S_i = Maximum bending stress intensities, psi w = System pressure, 0 psig D_s = Disc inside diameter, 5.041 in. b = Hub radius 0.591 in. m = Reciprocal of Poisson's ratio, 3.333 Material: SA-637 TP 718 (SA/SB-637 Gr.718) S_m = 45,225 psi (575°F), Allowable bending stress intensity: 1.5 S_m = 67,838 psi (@ 575°F)			
	SSAP0	{ Algor SUPERSAP (finite element) Computer Program }		
		(At lower surface)	1.5 S_m = 67,838 psi	S_i = 23,100 psi
		(At upper surface)	1.5 S_m = 67,838 psi	S_i = 19,600 psi
Spring washer stress requirements	$S_S = \frac{F_T}{A_S}$ where: F_T = Total spring load at full lift A_S = Shear area, $(in.)^2$	(Same notation) Material: A-105, Grade II Sm (at 400°F) = 26,000 psi	$S_S < 0.6$ Sm	S_S = 0.15 Sm = 0.25 (allowable)

Table 3.9-2h

Main Steam Isolation Valve

Criteria	Method of Analysis	Allowable Stress or Minimum Thickness	Calculated Stress or Actual Thickness
Design of pressure retaining parts	All references are made to ASME Boiler & Pressure Vessel Code, Section III, Nuclear Power Plant Components, 1971 Edition as Addended through Winter 1971. Reference the same code for explanation of the symbols used.		
Body minimum wall thickness	Reference paragraph NB-3543, Nonstandard Pressure-Rated Valve, Table NB-1542-1.		
	For design condition of 1250 psig and 575°F. The primary service rating = 495 based on a core diameter of 23.9 in.		
	t_m = 1.58 in. (Including a corrosion allowance of 0.12 in.).	1.58 in.	2.12 in.
Body shape rule	Reference paragraph NB-3544, Body Shape Rules		
Radius of crotch	Reference paragraph NB-3544.1(a), Radius of Crotch criterion $r_2 \geq 0.3\ t_m$ as r_2 = 1.00 in., t_m = 1.58 + 1.00		
	0.3 x 1.58 = 0.47 criterion satisfied		
Corner radii on internal surfaces	Reference paragraph NB-3544.1(b), Corner Radii on Internal Surfaces criterion $r_4 < r_2$ as r_4 = 0.69 in., r_2 = 1.00 in. + 0.69 < 1.00		
	criterion satisfied		
Out of roundness	Reference paragraph NB-3544.5, Out of Roundness, Figure NB-3545.1-2		
	$\frac{b}{t_b} + \frac{3}{4}\frac{3b^2 - 2ab - a^2}{t_b^2} + 1 \leq 1.5\frac{S_m}{P_s}$		
	a = 10.20 in., b = 15.75 in., c = 4.13 in. Sm = 19,400 psi 18.83 ≤21.56 Criterion satisfied		

Table 3.9-2h

Main Steam Isolation Valve (Continued)

Criteria	Method of Analysis	Allowable Stress or Minimum Thickness	Calculated Stress or Actual Thickness
Longitudinal curvature	Reference paragraph NB-3544.6 Longitudinal Curvature Criterion $\gamma\frac{1}{\text{Long.}}+\gamma\frac{1}{\text{Lat.}}-\frac{4}{3d_m}$ as $r_{\text{Long.}}=35.31$ in., $r_{Lat.}$ = 15.75 in., d_m = 23.90 in., + 0.09 ≤ 0.06 criterion satisfied		
Flat wall limitation	Reference paragraph NB-3544.7, Flat Wall Limitation $\frac{d}{t}-\frac{3dm}{2tm}$ dm = 23.90 in. tm = 1.58 in. d = 35.76 in. t = 4.06 in.		
Minimum wall at weld end	Reference paragraph NB-3544.8, Minimum Wall at Weld End		
	Actual thickness at 1 x t_m (i.e., 1.58 in. measured along the run direction) is 3.80 in.	1.58 in.	3.80 in.
Primary crotch Stress due to internal pressure	Reference paragraph NB-3545.1		
	criterion $P_m=(\frac{A_f}{A_m}+0.5)P_S \le S_m$		
	where A_f = 591.8 in.^{2}, A_m = 128.4 in.^{2}, P_s = 1,350 psig, P_m = 6,897 psi, S_m = 19,400 psi, since $S_m \ge P_m$ criterion satisfied	19,400 psi	6,897 psi
Valve body secondary stress	Reference paragraph NB-3545.2		

Table 3.9-2h

Main Steam Isolation Valve (Continued)

Criteria	Method of Analysis	Allowable Stress (psi)	Calculated Stress (psi)
Primary plus secondary stress due to internal pressure	Reference paragraphs NB-3545.2(a)(1), NB-3545.2(a)(2) $Q_P = C_P(\frac{r_i}{t_e} + 0.5) P_S Ca$ where $C_P = 3$, $r_i = 11.80$ in., $P_S = 1350$ psi. $t_e =$ 3.80, $Q_P = 14{,}601$ psi for wye-type valve $C_a = 1.33 + Q_P = 19{,}420$		
Secondary stress due to pipe reaction	Reference paragraph NB-3545.2(b), Figures NB-3545.2-3. NB-3545.2-5, and NB-3545.2-6		
Direct or axial load effect	$P_{ed} = \frac{F_d S}{G_d}$ where $S = 41{,}000$ $F_{d.} = 34.5$ in. ^{2} $G_d = 314.8$ in.^{2} $\rightarrow P_{ed} = 4493$ psi	29,100	4,493
Bending load effect	$P_{eb} = C_b \frac{F_b S}{G_b}$ where $S = 41{,}000$, $F_b = 380$ in.^{3} i.d.$= 23.65$ in., $r_i = 11.80$, t_e $3.80_{\bar{r}} = 13.70$ in. as $\frac{t_e}{r} = 0.257 > 0.19 + C_b = 1$ $G_b = \frac{I}{r_i + t_e}$ where $I = 30{,}453$ in.^{4}, $r_i = 11.83$ in., $t_e = 3.80$ G_b 1948 in. ^{3} $\rightarrow P_{eb} =$ 7998 psi	29,100	7,998

Table 3.9-2h

Main Steam Isolation Valve (Continued)

Criteria	Method of Analysis	Allowable Stress (psi)	Calculated Stress (psi)
Torsion load effect	Reference paragraphs 3545.29(b)(1). 3545.2(b)(6)(c)		
	$P_{et} = 2\frac{F_b S}{G_t}$ where $F_b = 380\ \text{in.}^3$, S = 41,000 psi		
	$G_t = C_t \overline{tA}\ \ t = 3.43\ \text{in.}, \overline{A} = 596\ \text{in.}^2, C_t = 1.78, G_t = 3639\ \text{in.}^3$	29,100	8,563
	P_{et} = 8563 psi		
Thermal secondary stress at crotch region	Reference paragraph NB-3545.2(c), Figures NB-3545.2(c)-2, NB-3545.2(c)-3, and NB-3545.2(c)-4		
	$Q_T = Q_{T_1} + Q_{T_2}$		
	where $Te_1 = 5.20\ \text{in.}, Q_{T_1} = 3200$		
	$C_{T_2} = C_6 C_2\ \Delta T_2$ where $C_2 = 0.48\ C_6 = 210$ and $\Delta T_2 = 1.6^\circ F$		
	$Q_{T_2} = 161\ \text{psi}, Q_T = 3361\ \text{psi}$		
	criterion $S_N = Q_P + P_{ed} + 2Q_{T_2} \le 3S_m$		
	where $Q_P = 19{,}420\ P_{ed} = 4493\ Q_{T_2} = 161$		
	as 24,235 ≤ 58,200 criterion satisfied	58,200	24,235
Normal duty valve fatigue requirements	Reference paragraphs 3545.3, NB-3545.3(a), NB-3545.3a, and Figure 1-9-1 criterion $N_a \ge 2{,}000$ cycles		

Table 3.9-2h

Main Steam Isolation Valve (Continued)

Criteria	Method of Analysis	Allowable Stress (psi)	Calculated Stress (psi)
Normal duty valve fatigue requirements (continued)	$S_{P_1} = \frac{2}{3}Q'_P + \frac{P_{eb}}{2} + Q_{T_3} + 1.3Q_{T_1}$ $S_{P_2} = 0.4Q_P + \frac{K}{2}(P_{eb} + 2Q_{T_3})$		
	where $Q'_P = 19{,}420$ $P_{eb} = 7998$ Kr2, $Q_{T_1} = 3200$		
	$Q_{T_3} = 175\text{ psi} + S_{P_1} = 21{,}267$ $S_{P_2} = 16{,}116$ S_a equal to the larger of S_{P_1} and		
	$S_{P_2} \rightarrow S_a = 21{,}267 + N_a = 75{,}000 \geq 2{,}000$ criterion satisfied		
Cyclic loading requirements at valve crotch	Reference paragraph NB-3550 For the largest temperature change range criterion $Q' + P_{ed} + C_6C_2C_4\,\Delta T_f \text{ max} \leq 3\,S_m$		
	where $Q'_P = 19{,}420$ psi, $P_{ed} = 4493$ $C_6 = 210$ at ΔT_f max of 342°F, $C_2 = 0.48$, $C_4 = 0.15$ $S_m = 19{,}400$		
	$\rightarrow 29{,}084 \leq 58{,}200$ criterion satisfied	58,200	29,084
	Thermal Transients Not Excluded by Code Criterion $\sum \frac{N_{ri}}{N_i} < 1$		
	Calculate the fatigue usage factor (I_t) as follows:		
	S_n Max $= Q'_P + P_{eb} + C_6C_3C_4\Delta T_f$ max , S_n max $= 33{,}343$ psi		
	Since S_n max $< 3\,S_m$ $(= 58{,}200)$ the following equation is used:		

Table 3.9-2h

Main Steam Isolation Valve (Continued)

Criteria	Method of Analysis	Allowable Stress or Minimum Thickness	Calculated Stress or Actual Thickness
Cyclic loading requirements at valve crotch (continued)	$S_i = \frac{4}{3} Q'_P + P_{eb} + C_6 (C_3 C_4 + C_5) \Delta T_{f_i}$ for $\Delta T_{fi} + 122\ N_{ri} = 21$, $S_i = 64{,}956$ psi, $N_i = 18{,}000$ $N_{ri}/N_i = 0.0012$ $\Delta T_{fi} = 90\ N_{ri} = 250\ S_i = 56{,}808$ psi, $N_i = 22{,}000$ $N_{ri}/N_i = 0.0114$ $\Delta T_{fi} = 342\ N_{ri} = 17$, $S_i = 120{,}973$ psi, $N_i = 2100$ $N_{ri}/N_i = 0.0081$ $as\ I_t = \sum \frac{N_{ri}}{N_i} = 0.0207 < 1\ criterion\ satisfied$		
Disk design calculation	Reference paragraph NB-3546.3, Table I-1.1 Roark, 4th Edition Pages 220, 222 Disk design conditions, $P_s = 1350$ psi at 500°F, $S_m = 20{,}800$ psi @ 500°F Case No. 13 $S = \frac{3W}{4mt^2(a^2 - b^2)}(a^4(3m+1) + b^4(m-1) - 4_m a^2 b^2 - 4(m+1)a^2 b^2 (1n(a/b)1$ Where $W = 1350$ psi, $m = \frac{10}{3'}\ t + 5.875$ in., $a = 10.75$ in., $b = 2.28$ in., $S_t = 424{,}828$ psi		

Table 3.9-2h

Main Steam Isolation Valve (Continued)

Criteria	Method of Analysis	Allowable Stress or Minimum Thickness	Calculated Stress or Actual Thickness
Disk design calculation (continued)	Case No. 14 $S = \frac{3W}{2mt^2}\frac{(2a^2(m+1)}{a^2-b^2}1n\,(\frac{a}{b})+(m-1)$		
	where W = 61,072 lb_f' t = 1.0 in., $m=\frac{10}{3'}$		
	a = 11.93 in., b = 2.28 in., S_t = 150,633 psi	5.50 in.	6.60 in.
	Case No. 21 $S_r = \frac{3W}{4t^2}\frac{(4a^4(m+1)1n\left(\frac{a}{b}\right)-a^4(m+3)+b^4(m-1)+4a^2b^2)}{a^2(m+1)+b^2(m-1)}$		
	where $W=1350,\ m=10/3,\ t=2.67$ in, $a=11.93$ in., $b=8.88$ in.		
	$\rightarrow S_r$ = 6,090 psi		
	Case No. 22 $S_r = \frac{3W}{2t^2}\frac{(2a^2(m+1)1n\left(\frac{a}{b}\right)-a^2(m-1)-b^2(m-1)}{a^2(m+1)+b^2(m-1)}$		
	where W = 448,998 m = 10/3, t = 2.67 in., a = 11.93 in., b = 9.88 in		
	$\rightarrow S_r$ = 11,996 psi		
	Total stress = $S_{r_{21}} + S_{r_{22}}$ = 14,,638 psi, allowable stress 17,800 psi	20,800 psi	14,638 psi
	S_{shear} at inner edge disk		
	$S_{shear} = \frac{F}{\lambda}$ where F = 61,072 lb., λ = 98.08 $in.^2$	12,480 psi	623 psi
	$\rightarrow S_{shear}$ = 623 psi		
	$S_{shear} = \frac{F}{\lambda}$ where F = 620,458 lb. λ = 134 $in.^2$	12,480 psi	4,630 psi
	$\rightarrow S_{shear}$ = 4,630 psi		
	Allowable shear stress = 0.6 x allowable stress = 0.6 x S_m = 12,480 psi		

Table 3.9-2h

Main Steam Isolation Valve (Continued)

Criteria	Method of Analysis	Allowable Stress or Minimum Thickness	Calculated Stress or Actual Thickness
Tensile stress at thread	$S_A = \frac{F}{A_t}$ where F = 440,893 lb, A_t = 193.7 in.^{2} , S = 2276 lb S_m = 20,800 psi		
Stem disk design calculation	Ref. Roark 4th Ed. P. 216 Design Conditions: P_s = 1350 psi @ 500°F, S_{all} = 20,800 psi		
Tensile and shear	Case No.1 $S_r = S_t = \frac{3W_P}{8\ mt^2}(3m+1)$ W_P = PA = 26,085 lb., m - 10/3, t = 1 (unit thickness) => S_t' = S_r = 10,285 psi Case No.3 $S_r = S_t = \frac{3W}{2\eta\, mt^2}\left(1/2(m-1) + (m+1)\ln(\frac{a}{r_o}) - (m-1)\frac{r_o^2}{2a^2}\right)$ W = 35,210 lb., t = 1 in. (unit thickness), a = 2.48 in. r_o = .94 in., m = 10/3 => S_{t3} = S_r = 26,190 psi => $t_r = \frac{S_{t1} + S_{t3}}{S_m}$ = 1.32 in. $t_{required}$ = t_r + 2(12) = 1.56 in.	1.56 in.	1.85 in.
Shear stress above seat	$S_s = \frac{Fs}{A}$, Fs = 65,535 lbs., A = 22.2 in.^{2} , S = 2920 psi, S_{all} = 0.6 S_m = 12,480 psi	12,480 psi	2,920 psi

Table 3.9-2h

Main Steam Isolation Valve (Continued)

Criteria	Method of Analysis	Allowable Stress or Minimum Thickness	Calculated Stress or Actual Thickness
Bonnet design calculations including seismic accelerations for SSE	Reference paragraph NB-3647.1(a), paragraph UG-34 (k)(2) of Section VIII Div. 1, 1971 Edition		
Minimum thickness	$P_{fd} = P + P_{eq}$, $P_{eq} = \frac{16M}{G^3} + \frac{4F}{G^2}$ where M = 834,415 in. -lb, F = 39,400 lb, G = 24.72 in. P_{eq} = 381 psi, P_{fd} = 1756 psi $t = d\sqrt{\frac{CP}{S} + \frac{1.78\,W\,hg}{S_d{}^3}}$ where C = 0.3, P = 1714 psi, S = 19,400 psi, hg = 3.05 in. W = 1,077,640 lb, d = 24.72 in. t = 5.329 in., t = 5.329 + 0.120 = 5.45 in. (corrosion allowance is 0.120 in.)	5.45 in.	8.88 in.
Reinforcement	Reference paragraph UG-39 (d) (2) Section VIII Div. I, 1971 Edition. To account for the opening for stem in the bonnet. $t = 2\left(d\frac{CP}{S} + \frac{1.78\,W\,hg}{S_d{}^3}\right)$ t = 7.54 in., t = 7.54 + 0.12 = 7.66 in.		
Bonnet studs design calculation	Reference paragraph NB-3232.1 and Article E-1000 Bolt used 24 pieces of 1 5/8 - 8 UNC Bolts Total bolt area = $42.72.^2$		

Table 3.9-2h

Main Steam Isolation Valve (Continued)

Criteria	Method of Analysis	Allowable Stress (psi)	Calculated Stress (psi)
Normal operation	1. Pressure stress at Operating Condition $S_1 = \frac{W_{ml}}{A_b} = 25{,}226\,\text{lb / in}^2$ where $W_{ml} = 1{,}077{,}640$ lb, $A_b = 42.72\ \text{in.}^2$ 2. Gasket Load at ambient condition with no internal pressure $S_2 = \frac{W_{m2}}{A_b} = 2{,}616\,\text{lb / in}^2$ where $W_{m2} = 111{,}774\,\text{lb}_f$ $A_b = 42.72\ \text{in.}^2$ Maximum tensile stress = 25,226 lb/in.^{2} Thermal stress is assumed negligible because the coefficients of thermal expansion of bonnet plate and stud are the same. Standard preload 45,000 psi S_{all} = 69,000 psi	69,400	45,000
Body flange design calculations	Reference paragraph NB-3647.1 and Section VIII Div. I, 1971 Edition. Total flange moment under operating conditions $M_O = M_D + M_G + M_T$ $M_D = H_D h_D$' $H_D = 0.785\ B^2P$, $h_D = R + 0.5g$, where B = 24.14 in., P = 1,714 psi → H_D 784,070 lb_f, h_D = 1.94 in. M_D = 1,521,096 in.-lb $M_G = H_G h_g, H_G = W - H, h_G = \frac{C - G}{2}$ where W is the higher of W_{m1} and W_{m2} $W_{ml} = 0.785\ G^2P + (2b \times 3.14\ G\ m\ P)$ $W_{m2} = 3.14\ G_{by}$		

Table 3.9-2h

Main Steam Isolation Valve (Continued)

Criteria	Method of Analysis	Allowable Stress (psi)	Calculated Stress (psi)
Body flange design calculations (continued)	where G = 24.72 in., b = .32 in., m = 3, y = 4,500 $\rightarrow W_{m1}$ = 1,077,640 lb, W_{m2} = 111,774 lb $\rightarrow H_G$ = 255,440 lb, h_G = 3.02 in. $\rightarrow M_G$ = 771,429 in.-lb $M_T = H_T h_T, H_T = H - H_D, h_T = \frac{R + g_1 + h_G}{2}$ where H = 822,200, H_D = 784,070, R = .575 in., q_1 = 2.73 in.-lb. h_G = 3.02 $\rightarrow H_T$ = 38,130 lb, h_T = 3.16 in., M_T = 120,586 in.-lb. M_O = 2,413,111 in.-lb, where M_D = 1,521,096 in.-lb M_G = 771,429 in.-lb, M_T = 120,586 Total flange moment under gasket seating condition $M_O = W\left(\frac{C - G}{2}\right),\ W = \left(\frac{A_m + A_b}{2}\right) s_a$ where C = 30.75 in., A_b = 42.72 in.^{2}, G = 24.72 in., A_m = 31.06 in.^{2}, s_a = 40,000 psi at 100°F $\rightarrow$ W = 1,475,600 lb, M_O = 4,448,934 lb-in.		
Longitudinal hub stress	Reference Paragraph NB-3647.1(d) $S_H = \frac{fM_O}{Lg_1^2B} + \frac{PB}{4g_O}, 1.5\,S_m = 29{,}100\ \text{lb/in.}^2$ $(S_H)_{oper}$ = 14,484 psi, $(S_H)_{atmos}$ = 23,507 psi	29,100	14,484

Table 3.9-2h

Main Steam Isolation Valve (Continued)

Criteria	Method of Analysis	Allowable Stress (psi)	Calculated Stress (psi)
Radial stress	Reference UA-51(1), Equation (7) of Section VIII of ASME B&PV Code, 1971 Edition		
	$S_R = \frac{(1.33t_e + 1)M_O}{Lt^2B}; 1.5S_m = 29{,}100$ psi	29,100	5,144
	$(S_R)_{open} = 5144$ psi, $(S_R)_{atmos} = 9483$ psi	34,950	9,483
Tangential stress	$S_T = \frac{(YM_O)}{t^2B} - ZS_R; 1.5\,S_m = 29{,}100$		
	where Y = 57, t = 5.56 in., Z = 3.50, B = 24.14 in.	29,100	3,015
	$(S_T)_{open}$ = 3,015 psi; $(S_T)_{atmos}$ = 5533 psi	34,950	5,533
Flange stress criteria	$\frac{S_H + S_R}{2} S_m, \frac{S_H + S_T}{2} S_m$		
	Open Atmos.		
	$\frac{S_M + S_R}{2}$ = 9814 psi 16,495 psi	19,400	9,814 (open)
	$\frac{S_H + S_T}{2}$ = 8750 psi 14,295 psi	19,400 23,300	8,750 (atmos.) 16,495 (open)
		23,300	14,295 (atmos.)

Table 3.9-2h

Main Steam Isolation Valve (Continued)

Criteria	Method of Analysis	Allowable Stress (psi)	Calculated Stress (psi)
Stem calculation			
Back seated stress	$S = \frac{F}{A}$ where F = 9916 lb net upward force A = 2.268 in.^{2}, the smallest cross-sectional area on the stem S= 4372 psi < 26,700 psi	26,700	4,372
Valve close stem stress	$S = \frac{F}{A}$ where F = 39,450 lb net down force A = 2.268 in.^{2}, the smallest cross-sectional area on the stem S= 17,394 psi < 26,700 psi	26,700	17,394
Stem thread strength	Reference Federal Thread Standard Stem thread Mating With Disk Thread 1.875 in. - 12 UN - 2 Thread A_{S1} = 5.23 in.^{2}/inch engagement $r = \frac{F}{A_{S1}}$ where F = 39,450 lb_f , A_{S1} = 5.23 in.^{2} , t_{sd} = 7543 psi	16,020	7,543

Table 3.9-2i

Recirculation Pump[a]

	Criteria	Method of Analysis	Analytical Results	Allow, Stress, or Actual Thickness
1.	Casing minimum wall thickness	$t = \frac{PR}{SE - 0.6P} + C$	t = 2.855 in.	S_{allow} = 15,075 psi $t_{act.}$ = 2.858 in.
	A. Loads: Normal and upset condition Design pressure & temperature	where: t = minimum required thickness, in. P = design pressure, psig R = maximum internal radius, in. S = allowable working stress, psi E = joint efficiency C = corrosion allowance, in.		
	B. Primary membrane stress limit: Allowable working stress per ASME Section III, Class C			
2.	Casing cover minimum thickness			
	A. Loads: Normal and upset condition Design pressure & temperature	$S_r = \frac{3W}{4t^2}\left(a^2 - 2b^2 + \frac{b^4(m-1) - 4b^4(m+1)\ln(a/b) + a^2b^2(m+1)}{a^2(m-1) + b^2(m+1)}\right)$	s_r = 8,015 psi	S_A = 15,075 psi 1.5 S_m = 22,607 psi
	B. Primary bending stress limit: 1.5 S_m per ASME Code for Pumps & Valves for Nuclear Power Class I.	$+\frac{3W}{2t^2}\left(1 - \frac{2mb^2 - 2b^2(m+1)\ln(a/b)}{a^2(m-1) + b^2(m+1)}\right)$ $S_t = -\frac{3W(m^2-1)}{4mt^2}\left(\frac{a^4 - b^4 - 4a^2b^2\ln(a/b)}{a^2(m-1) + b^2(m+1)}\right) +$ $\frac{3W}{2mt^2}\left(1 + \frac{ma^2(m-1) - mb^2(m+1) - 2(m^2-1)a^2\ln(a/b)}{a^2(m-1) + b^2(m+1)}\right)$	S_t = 3,984 psi	S_A = 15,075 psi

Table 3.9-2i

Recirculation Pump[a] (Continued)

Criteria	Method of Analysis	Analytical Results	Allow, Stress, or Actual Thickness
	where: S_r = radial stress at outer edge, psi S_t = tangential stress at inner edge, psi w = pressure load, psi W = Uniform load along inner edge, lb t = disc thickness, in. m = reciprocal of Poisson's ratio a = radius of disc, in. b = radius of disc hole, in.		
3. Pump discharge nozzle stress (pressure, bending, axial and torsional)	Pressure $P_p = \frac{SET}{R + 0.6t}$	P_P = 1,644 psi	1.5 S_m = 29,400 psi
A. Loads: Normal and upset condition Design pressure & temperature piping reactions during normal operation.	Bending $P_{eb} = \frac{C_b F_b S}{G_b}$	P_{eb} = 7,232 psi	
B. Combined stress limit: 1.5 S_m per ASME Code for Pumps and Valves for Nuclear Power Class 1.	Axial $P_{ed} = \frac{F_d S}{G_d}$	P_{ed} = 3,605 psi	
	Torsional $P_{et} = \frac{2F_b S}{G_t}$	P_{et} = 7,233 psi	
	Combined $P_c = P_P + P_{eb} + P_{ed} + P_{et}$	P_c = 19,714 psi	

Table 3.9-2i

Recirculation Pump[a] (Continued)

	Criteria	Method of Analysis	Analytical Results	Allow, Stress, or Actual Thickness
4.	Cover and seal flange bolt areas	Bolting loads, areas and stresses shall be calculated in accordance with "Rules for Bolted Flange Connections" - ASME Section VIII, Appendix II.	Cover Flange Bolts $S_{act.}$ = 16,772 psi A_m = 118.8 in.^{2}	$S_{All.}$ = 25,325 psi $A_{min.}$ = 78.6 in.^{2}
	A. Loads: Normal and upset condition Design pressure and temperature Design gasket load B. Bolting stress limits Allowable working stress per ASME Section III			
5.	Cover clamp flange thickness	Flange thickness and stress shall be calculated in accordance with "Rules for Bolted Flange Connections" - ASME Section VIII, Appendix II.	Flange Thickness and Stress	
	A. Loads: Normal and upset condition Design pressure and temperature. Design gasket load Design bolting load B. Tangential flange stress limit Allowable working stress per ASME Sect. III		t = 7.64 in. $S_{Act.}$ = 12,497 psi	$t_{Act.}$ = 8-3/8 in. S_{Allow} = 15,000 psi
6.	Seal compartment wall thickness	$t = \frac{PR}{SE - 0.6P} + C$ where: t = minimum required. thickness, in. P = design pressure, psig R = max. internal radius, in. S = allowable working stress, psi E = joint efficiency C = corrosion allowance, in.	t = 1.071 in.	S_m = 15,075 psi $t_{Act.}$ = 1.854 in.
	A. Loads: Normal and upset condition Design pressure and temperature B. Primary membrane stress limit Allowable working stress per ASME Section III.			

Table 3.9-2i

Recirculation Pump[a] (Continued)

	Criteria	Method of Analysis	Analytical Results	Allow, Stress, or Actual Thickness
7.	Seal gland retainer	$S_s = \frac{W}{W_{dt}}$	S_s = 5,486 psi	S_s = 9,480 psi
	A. Loads: Normal and upset condition Design pressure and temperature	W = load imposed d = diameter at shear resistance t = thickness at shear resistance		
	B. Allowable working stress per ASME Code Section VIII.			
8.	Shock suppressor lug combined stress	Loads shall be applied in the normal direction simultaneously to determine tensile, shear and bending stresses in the brackets. Tensile, shear, and bending stresses shall be combined to determine maximum combined stresses.	Combined stress (bending plus tensile)	S_m = 19,435 psi S_Y = 21,600 psi
	A. Loads: SSE + hydrodynamic force = 1.72 g horizontal 1.8 g vertical		Lug #1 S_C = 21,430 psi Lug #2 S_C = 12,070 psi Lug #3 S_C = 15,540 psi	S_C = 64,800 psi
	B. Combined stress limits Yield stress per ASME Section III			
9.	Hanger Bracket Combined Stress	Bracket vertical loads shall be determined by summing the equipment and fluid weights and vertical seismic forces.	S_C = 5,520 psi	S_m = 12,600 psi
	A. Loads: Flooded weight of equipment SSE hydrodynamic force = 1.4 g	Load = (W_B + W_C + W_D).33 Note: The multiplier (.33) is added as a safety factor specified on the Purchase Part Drawing.		
	B. Combined stress limit Yield stress per ASME Section VIII	W_B = weight of motor W_C = weight of motor mount W_D = weight of pump case		

Table 3.9-2i

Recirculation Pump[a] (Continued)

	Criteria	Method of Analysis	Analytical Results	Allow, Stress, or Actual Thickness
10.	Stresses due to seismic loads	The flooded pump-motor assembly shall be analyzed as a free body supported by constant support hangers from the pump brackets. Horizontal and vertical seismic forces shall be applied at mass center of assembly and equilibrium reactions shall be determined for the	Motor bolt tensile stress:	
	A. Combined stress limit Limit stress per ASME Section VIII	motor and pump brackets. Load sheer and moment diagrams shall be constructed using live loads and calculated snubber reactions. Combined bending, tension, and shear stresses shall be determined for each major component of the assembly including motor support barrel, bolting, and pump casing. The maximum combined tensile stress in the cover bolting shall be calculated using tensile stresses	$S_{Act.}$ = 19,703 psi	$S_{All.}$ = 45,000 psi
			Pump cover bolt tensile stress:	
			$S_{Act.}$ = 18,542 psi	$S_{All.}$ = 38,062 psi
	B. Loads: Operating pressure and temperature SSE + Hydrodynamic = 1.72g Horizontal 1.8g vertical	determined from loading diagram plus tensile stress from operating pressure.	Motor support barrel lugs combined stress:	
			$S_{Act.}$ = 8,327 psi	$S_{Act.}$ = 12,600 psi

[a] This pump constructed to the requirements of the 1971 Edition of Section III, however, the 1971 Edition stated that requirements for pumps were in course of preparation and that until they were issued any method which had been shown to be satisfactory could be used. Consequently, several different references have been used.

Table 3.9-2j

Reactor Recirculation System Gate Valves, 24 in. Discharge
Structural and Mechanical Loading Criteria[a]

	Discharge Valve	Design Procedure	Required Design Value	Actual Design Value
1.0	Body and Bonnet			
1.1	Loads: Design pressure, design	Vendor's design calculation	1,675 psi 575°F	1,675 psi 575°F
1.2	Pressure rating, psi	Used NB-3543, Table NB-3531-5, and NB-3531-6 of Section III	P_r = 908 psi	P_r = 908 psi
1.3	Minimum wall thickness, in.	Used NB-3543 and Table NB-3542-1	$t_m \geq$ 2.33 in.	t_m = 2.375 in.
1.4	Primary membrane stress, psi	Used NB-3545.1	$P_m \leq S_m$ (500°F) = 19,600 psi	P_m = 11,850 psi
1.5	Secondary stress due to pipe reaction	Used NB-3545.2(b)	1.5 S_m = 29,400 psi	P_{ed} = 6,700 psi P_{eb} = 13,600 psi
1.6	Primary plus secondary stress due to internal pressure	Used NB-3545-2(a)	See 1.8 below	Qp = 23,930 psi
1.7	Thermal secondary stress	Used NB-3545-2(c)	See 1.8 below	Q_{T1} = 3,000 psi Q_{T2} = 1,220 psi Q_{T3} = 1,405 psi
1.8	Sum of primary plus secondary stress	Used NB-3545.2	$S_n = Q_p + P_{ed} + 2Q_{T2}$ $S_n =\leq 3S_m$ (500°F) = 58,000 psi	S_n = 33,070 psi
1.9	Fatigue requirements	Used NB-3545.3	$N_a \geq$ 2,000 cycles	$N_a > 10^5$ cycles
1.10	Cyclic rating	Used NB-3550	$I_t \leq$ 1.0	I_t = 0.015

Table 3.9-2j

Reactor Recirculation System Gate Valves, 24 in. Discharge
Structural and Mechanical Loading Criteria[a] (Continued)

	Discharge Valve	Design Procedure	Required Design Value	Actual Design Value
2.0	Body to bonnet bolting			
2.1	Loads: design pressure and temperature, gasket loads, stem operational load, seismic load (design basis earthquake)	Used NB-3546.1, NB-3647.1 and Section VIII		
2.2	Bolt area	Used NB-3546.1, NB-3647.1, and Section VIII	$A_b \geq 42.79$ in.^{2} $S_b \leq 27{,}975$ psi	$A_b = 53.04$ in.^{3} $S_b = 22{,}800$ psi
2.3	Body bonnet flange stresses	Used NB-3546.1, NB-3647.1, and Section VIII		
2.3.1	Operating condition	Used NB-3546.1, NB-3647.1, and Section VIII	$S_H \leq 1.5\ S_m$ (575°F) = 28,837 psi $S_R \leq 1.5\ S_m$ (575°F) = 28,837 psi $S_T \leq 1.5\ S_m$ (575°F) = 28,837 psi	$S_H = 16{,}777$ psi $S_R = 4{,}447$ psi $S_T = 5{,}306$ psi
2.3.2	Gasket seating condition	Used NB-3546.1, NB-3657.1, and Section VIII	$S_H \leq 1.5\ S_m$ (150°F) = 30,000 psi $S_R \leq 1.5\ S_m$ (150°F) = 30,000 psi $S_T \leq 1.5\ S_m$ (150°F) = 30,000 psi	$S_H = 22{,}531$ psi $S_R = 6{,}550$ psi $S_T = 7{,}811$ psi
3.0	Stresses in stem			
3.1	Loads: operator thrust and torque			
3.2	Buckling of stem	Calculate slenderness ratio. If greater than 30, calculate allowable loads from Rankine's Formula using safety factor of 4.	Maximum allowable load = 102,050 lb	Slenderness ratio = 56 Actual thrust on stem = 51,000 lb No buckling

Table 3.9-2j

Reactor Recirculation System Gate Valves, 24 in. Discharge
Structural and Mechanical Loading Criteria[a] (Continued)

	Discharge Valve	Design Procedure	Required Design Value	Actual Design Value
3.3	Stem thrust stress	Calculate stress due to operator thrust in critical cross-section.	$S_{T,C} \leq S_m$ = 43,950 psi	$S_{T,C}$ = 15,045 psi
3.4	Stem torque	Calculate shear stress due to operator torque in critical cross-section.	$S_C \leq .6S_m$ = 16,785 psi	S_C = 10,748 psi
4.0	Disc analysis			
4.1	Loads: maximum differential pressure			
4.2	Maximum stress	Calculate maximum stress according to R.J. Roark, "Formulas for Stress and Strain"	$S_{max} \leq 1.5\ S_m$ (575°F) = 23,700 psi	S_{max} = 15,294 psi
5.0	Yoke and yoke connections			
5.1	Loads: stem operational load	Calculate stresses in the yoke and yoke connections to acceptable structural analysis methods.		
5.2	Tensile stress in yoke legs bolts		$S_{max} \leq S_m$ = 25,000 psi	Max. stress = 15,064 psi
5.3	Bending stress of yoke legs		$S_{max} \leq S_m$ = 17,500 psi	S_b = 13,701 psi

Table 3.9-2j

Reactor Recirculation System Gate Valves, 24 in. Discharge
Structural and Mechanical Loading Criteria[a] (Continued)

	Suction Valve	Design Procedure	Required Design Value	Actual Design Value
1.0	Body and bonnet			
1.1	Loads: design pressure, design temperature pipe reaction thermal effects	Kinder's Design calculations	1,250 psig 575°F	1,250 psig 575°F
1.2	Pressure rating, psi	Used NB-3543, Table NB-3531-4, and NB-3531-5 of Section III	P_r = 678 psi	P_r = 678 psi
1.3	Minimum wall thickness	Used NB-3543 and Table NB-3542-1	$t_m \geq 1.747$ in.	t_m = 1.75 in.
1.4	Primary membrane stress	Used NB-3545.1	$P_m \leq S_m$ (500°F) = 19,600 psi	P_m = 11,075 psi
1.5	Secondary stress due to pipe reaction	Used ASME Section III Paragraph NB-3545.2(b) (S = 30,000 psi)	$P_{ed} \leq 1.5\ S_m$ = 29,400 psi $P_{eb} \leq 1.5\ S_m$ = 29,400 psi $P_{et} \leq 1.5\ S_m$ = 29,400 psi	P_{ed} = 6,400 psi P_{eb} = 13,150 psi P_{et} = 13,100 psi
1.6	Primary plus secondary stress due to internal pressure	Used ASME Section III Paragraph NB-3545.2(a)	See 1.8 below	Q_P = 21,730 psi
1.7	Thermal secondary stress	Used ASME Section III Paragraph NB-3545.2	See 1.8 below	Q_{T1} = 2,000 psi Q_{T2} = 830 psi Q_{T3} = 960 psi
1.8	Sum of primary plus secondary stress	Used ASME Section III Paragraph NB-3545.2	$S_n = Q_P + P_{ed} + 2Q_{T2}$ $S_n \leq 3S_m$ (500°F) = 58,800 psi	S_n = 29,790
1.9	Fatigue requirements	Used ASME Section III Paragraph NB-3545.3	$N_a \geq 2{,}000$ cycles	$N_a = 10^6$ cycles
1.10	Cyclic rating	Used ASME Section III Paragraph NB-3550	$I \leq 1.0$	I = 0.046

Table 3.9-2j

Reactor Recirculation System Gate Valves, 24 in. Discharge
Structural and Mechanical Loading Criteria[a] (Continued)

	Suction Valve	Design Procedure	Required Design Value	Actual Design Value
2.0	Body to bonnet bolting			
2.1	Loads: design pressure & temperature gasket loads stem operational load (design basis earthquake)	Used NB-3546.1 and NB-3657.1		
2.2	Bolt area	Used NB-3546.1 and NB-3657.1	$A_b \geq 31.53$ in.^{2} $S_b \leq 27{,}975$ psi	$A_b = 47.73$ in.^{2} $S_b = 18{,}480$ psi
2.3	Body flange stresses	Used NB-3546.1 and NB-3657.1		
2.3.1	Operating condition	Used NB-3546.1 and NB-3657.1	$S_H \leq 1.5\ S_m$ (575°F) = 28,837 psi $S_R \leq 1.5\ S_m$ (575°F) = 28,837 psi $S_T \leq 1.5\ S_m$ (575°F) = 28,837 psi	$S_H = 17{,}170$ psi $S_R = 5{,}735$ psi $S_T = 6{,}120$ psi
2.3.3	Gasket seating condition	Used NB-3546.1 and NB-3657.1	$S_H \leq 1.5\ S_m$ (100°F) = 30,000 psi $S_R \leq 1.5\ S_m$ (100°F) = 30,000 psi $S_T \leq 1.5\ S_m$ (100°F) = 30,000 psi	$S_H = 25{,}245$ psi $S_R = 9{,}425$ psi $S_T = 10{,}140$ psi
3.0	Stress in stem			
3.1	Load operator thrust and torque			
3.2	Buckling of stem	Calculate slenderness ratio. If greater than 30, calculate allowable load from Rankine's formula using safety factor of 4.	Maximum allowable load = 100,000 lb	Slenderness ratio = 42.5. Actual load on stem = 18,100 lb. No buckling.

Table 3.9-2j

Reactor Recirculation System Gate Valves, 24 in. Discharge
Structural and Mechanical Loading Criteria[a] (Continued)

	Suction Valve	Design Procedure	Required Design Value	Actual Design Value
3.3	Stem thrust stress	Calculate stress due to operator thrust in critical cross-section	$S_{T,C} \leq S_m$ = 30,800 psi	$S_{T,C}$ = 5,340 psi
3.4	Stem torque stress	Calculate shear stress due to operator torque in critical cross-section	$S_C \leq .6\ S_m$ 18,480 psi	S_C = 4,155 psi
4.0	Disc analysis			
4.1	Loads: maximum differential pressure 50 psi			
4.2	Maximum stress in the disc	Calculate maximum stress according to Table 10 of Roark's "Formula for Stress and Strain"	$S_{max} \leq 1.5\ S_m$ (575°F) = 23,700 psi	S_{max} = 15,529 psi
5.0	Yoke and yoke connections			
5.1	Loads: stem operational load	Calculate stresses in the yoke and yoke connections to acceptable structural analysis methods		
5.2	Tensile stress in yoke legs bolts		$S_{max} \leq S_m$ = 25,000 psi	Max Stress = 11,060 psi
5.3	Bending stress at yoke legs		$S_{max} \leq S_m$ = 17,500 psi	S_b = 14,740 psi

[a] This table is for design criteria only. The calculated loads are less than allowable loads. See Table 3.9-2e.

Table 3.9-2k

Not Used

Table 3.9-2L

Standby Liquid Control Pump

Criteria/Loading					Component	Limiting Stress Type	Allowable Stress (psi)	Calculated Stress (psi)
Based on ASME B&PV Code, Section III								
Pressure Boundary parts:								
1)	Fluid Cylinder - SA 182-F304	S_Y	=	30,000 psi				
2)	Discharge valve stop, cylinder head extension, and stuffing box SA 479-304,	S_Y	=	30,000 psi				
3)	Discharge valve cover, cylinder head and stuffing box flange plate, SA-240-304,	S_Y	=	30,000 psi				
4)	Stuffing box gland, SA-564-630,	S_Y	=	90,000 psi				
5)	Studs, SA 193-B7,	S_Y	=	105,000 psi				
6)	Dowel pins[a] alignment, SAE 4140,	S_A	=	117,000 psi				
7)	Studs, cylinder tie, SA 193-B7,	S_A	=	25,000 psi				
8)	Pump holddown bolts, SAE GR.8,	T_A	=	15,000 psi				
		Q_A	=	12,000 psi				
9)	Power Frame, foot area, cast iron,	S_A	=	7,500 psi				
10)	Motor holddown bolts, SAE GR.1	T_A	=	12,000 psi				
		Q_A	=	15,000 psi				
11)	Motor frame foot area, cast iron,	S_A	=	7,500 psi				
<u>Normal and upset condition loads</u>:					1. Fluid Cylinder	General membrane	17,800	
1. Design pressure					2. Discharge valve stop	General membrane	17,800	(b)
2. Design temperature					3. Cylinder head extension	General membrane	17,800	
3. Operating basis earthquake					4. Discharge valve cover	General membrane	17,800	
4. Nozzle loads[c]					5. Cylinder head	General membrane	17,800	
5. Safety/relief valve discharge					6. Stuffing box flange plate	General membrane	17,800	
6. Dead weight					7. Stuffing box gland	General membrane	35,000	
7. Thermal expansion					8. Cylinder head studs	Tensile	25,000	
					9. Stuffing box studs	Tensile	25,000	

Table 3.9-2L

Standby Liquid Control Pump (Continued)

Criteria/Loading	Component	Limiting Stress Type	Allowable Stress (psi)	Calculated Stress (psi)
Emergency or faulted conditions	1. Fluid cylinder	General membrane	17,295 psi	3,640 psi
1. Design pressure	2. Discharge valve stop	General membrane	21,360 psi	13,600 psi
2. Design temperature	3. Cylinder head extension	General membrane	21,360 psi	13,600 psi
3. Weight of structure	4. Discharge valve cover	General membrane	21,360 psi	8,150 psi
4. Thermal expansion	5. Cylinder head	General membrane	21,360 psi	8,150 psi
5. Safe shutdown earthquake	6. Stuffing box flange plate	General membrane	30,000 psi	10,690 psi
6. Safety/relief valve discharge load	7. Stuffing box gland	General membrane	42,000 psi	11,420 psi
7. Loss-of-coolant accident	8. Cylinder head studs	Tensile	25,000 psi	18,620 psi
8. Nozzle loads	9. Dowel pins[a]	Shear only[a]	23,400 psi	19,400 psi
	10. Studs, cylinder tie	Tensile[a]	25,000 psi	24,750 psi
	11. Pump holddown bolts	Shear	12,000 psi	9,050 psi
	12. Pump holddown bolts	Tensile	15,000 psi	14,026 psi
	13. Power frame-foot area	Shear	15,000 psi	1850 psi
	14. Power frame-foot area	Tensile	15,000 psi	11,390 psi
	15. Motor holddown bolts	Shear	12,000 psi	3,480 psi
	16. Motor holddown bolts	Tensile	15,000 psi	6,315 psi
	17. Motor frame-foot	Shear	7,500 psi	2,550 psi
Faulted condition	SLC Pump Assembly	Acceleration	1.75g vertical	0.41g
Dynamic loads			1.75g horizontal	0.73g

1. Safe shutdown earthquake
2. Safety/relief valve
3. Loss-of-coolant accident

Table 3.9-2L

Standby Liquid Control Pump (Continued)

Criteria/Loading	Component	Limiting Stress Type	Allowable Loads (lb, ft-lb)	Calculated Loads (lb, ft-lb)
Nozzle load definition Units: Forces - lb Moments - ft-lb Allowable combination of forces and moments are as follows: 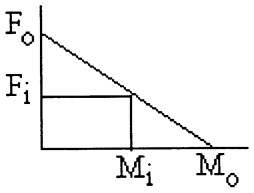 $\frac{F_i}{F_o}+\frac{M_i}{M_o}\le 1$ where: F_i = The largest absolute value of the three actual external orthogonal forces (F_x, F_y, F_z) that may be imposed by the interface pipe, and, M_i = The largest absolute value of the three actual internal orthogonal moments ((M_x, M_y, M_z) permitted from the pipe when they are combined simultaneously for a specific condition.				
Normal and upset condition loads: 1. Design pressure 2. Design temperature 3. Dead weight 4. Thermal expansion 5. Operating basis earthquake		F_o = Allowable value of F_i when all moments are zero. M_o = Allowable of M_i when all forces are zero.	Suction: F_o = 770 M_o = 490 Discharge: F_o = 370 M_o = 110	Less than or equal to allowable Acceptable per GE review

Table 3.9-2L

Standby Liquid Control Pump (Continued)

Criteria/Loading	Component	Limiting Stress Type	Allowable Loads (lb, ft-lb)	Calculated Loads (lb, ft-lb)
Emergency or faulted condition loads:				
1. Design pressure 2. Design temperature 3. Dead weight 4. Thermal expansion 5. Safe shutdown earthquake			Suction: F_o = 920 M_o = 590 Discharge: F_o = 440 M_o = 130	Less than or equal to allowable Acceptable per GE review

[a] Dowel pins take all shear.

[b] Calculated stresses for emergency or faulted condition are less than the allowable stresses for the normal and upset condition loads, therefore, the normal and upset condition is not evaluated.

[c] Nozzle loads produce shear loads only.

Note: Operability: The sum of the plunger and rod assembly, pounds mass times 1.75, acceleration is much less than the thrust loads encountered during normal operating conditions. Therefore, the loads during the faulted condition have no significant effect on pump operability.

Table 3.9-2m

Standby Liquid Control Tank

	Criteria	Method of Analysis	Allowable Stress (psi) or Acceleration (g) or Minimum Thickness Required (in.)	Calculated Stress (psi) or Acceleration (g) or Actual Thickness (in.)
1.	Shell thickness	Minimum thickness	0.010 in.	0.25 in.
	Loads: normal and upset	Cylindrical shell		
	Design pressure and temperature			
	Stress limit			
	Allowable working stress per ASME Section III			
2.	Shell stress	Loads will not produce excessive tensile or compressive		
	Loads: emergency	(buckling) stresses.		
	Design basis earthquake (SSE) nozzle load	Brownell & Young "Process Equipment Design" $t = \frac{PR}{SE - .6P}$		
	Stress limit		18,000 psi	3,314 psi
	ASME Section III	t = Minimum required thickness, in.		
	1/3 yield	P = Design pressure, psi		
		R = Shell inside radius, in.	Tensile (bolts)	
		S = Allowable stress, psi		
		E = Joint efficiency	10,000 psi	8104 psi
3.	Dynamic loads	Equivalent static	1.75g horizontal	0.73g
			1.75g vertical	0.73g
	Standby liquid control tank			
	Safe shutdown earthquake			
	Safety/relief valve			
	Loss-of-coolant accident			

Table 3.9-2n

Emergency Core Cooling System Pumps
Residual Heat Removal Pump

Location	Loading Condition	Criteria	Calculated Stress (psi)	Allowable Stress (psi)
Suction barrel shell	Faulted condition Design pressure Static loads Dynamic loads Nozzle loads	ASME Boiler and Pressure Vessel Code, Section III	6,399	20,400
Stuffing box pipe	Design pressure Static loads Dynamic loads Nozzle loads	ASME Boiler and Pressure Vessel Code, Section III	13,630	18,000
Nozzle shell inter section	Faulted condition Design pressure Static loads Dynamic loads Nozzle loads	ASME Boiler and Pressure Vessel Code, Section III	19,029	34,650
Discharge elbow or suction pipe (max. moment location)	Faulted condition Design pressure Static loads Dynamic loads Nozzle loads	ASME Boiler and Pressure Vessel Code, Section III	10,643	21,600
Motor stand	Faulted condition Static loads Dynamic loads	Buckling Loads and Stresses per ASME Section III	2,996	15,200
Motor Mounting Flange Bolting	Faulted condition Static Loads Dynamic Loads	Bolting Loads and Stresses per ASME, Section III Subsection NF	6,081	17,500

Table 3.9-2n

Emergency Core Cooling System Pumps (Continued)
Low-Pressure Core Spray Pump

Location	Loading Condition	Criteria	Calculated Stress (psi) or Calculated Stress Ratio	Allowable Stress (psi) or Allowable Stress Ratio
Suction barrel shell	Faulted condition Design pressure Static loads Dynamic loads Nozzle loads	ASME Boiler and Pressure Vessel Code, Section III	9,037 psi	21,000 psi
Stuffing box pipe	Design pressure Static loads Dynamic loads Nozzle loads	ASME Boiler and Pressure Vessel Code, Section III	11,355 psi	15,000 psi
Nozzle shell inter section	Faulted condition Design pressure Static loads Dynamic loads Nozzle loads	ASME Boiler and Pressure Vessel Code, Section III	12,170 psi	34,650 psi
Discharge elbow or suction pipe (max.)	Faulted condition Design pressure Static loads Dynamic loads Nozzle loads	ASME Boiler and Pressure Vessel Code, Section III	8,758 psi	17,500 psi
Motor stand	Faulted condition Static loads Dynamic loads	Buckling Loads and Stresses per ASME Section III	9,530 psi	15,200 psi
Motor bolting	Faulted condition Static loads Dynamic loads Nozzle loads	Bolting Loads and Stresses per ASME, Section III Subsection NF	4,824 psi	17,500 psi

Table 3.9-2n

Emergency Core Cooling System Pumps (Continued)
High-Pressure Core Spray Pump

Location	Loading Condition	Criteria	Calculated Stress (psi) or Actual Thickness (in.)	Allowable Stress (psi) or Minimum Thickness (in.)
Suction barrel shell	Faulted condition Design pressure Static loads Dynamic loads Nozzle loads	ASME Boiler and Pressure Vessel Code, Section III	5,115 psi	21,000 psi
Stuffing box pipe	Design pressure Static loads Dynamic loads Nozzle loads	ASME Boiler and Pressure Vessel Code, Section III	12,851 psi	18,000 psi
Nozzle shell intersection	Faulted condition Design pressure Static loads Dynamic loads Nozzle loads	ASME Boiler and Pressure Vessel Code, Section III	13,533 psi	34,650 psi
Discharge elbow or suction pipe (max.)	Faulted condition Design pressure Static loads Dynamic loads	ASME Boiler and Pressure Vessel Code, Section III	12,499 psi	21,000 psi
Motor stand	Faulted condition Static loads Dynamic loads Nozzle loads	Buckling Loads and Stresses per ASME Section III	6,840 psi	15,200 psi
Motor bolting	Faulted condition Static loads Dynamic loads Nozzle loads	Bolting Loads and Stresses per ASME, Section III Subsection NF	3,821 psi	21,000 psi

Table 3.9-2o

Residual Heat Removal Heat Exchanger

	Loading/Component	Criteria/Location	Allowable Stress or Minimum Thickness Required	Actual Stress or Actual Thickness
1.	Closure bolting	Bolting loads and stresses calculated per "Rules for Bolted Flange Connections", ASME Section III, App. XI		
	Loads: normal and upset			
	Design pressure and temperature			
	Design gasket load			
	Bolting stress limit	a. Shell to tube sheet bolts	25,000 psi	24,950 psi
	Allowable working stress per ASME Section III	b. Channel cover bolts	25,000 psi	24,390 psi
2.	Wall thickness	Shell side ASME Section III Class 2 and TEMA Class C		
	Loads: normal and upset			
		Tube side ASME Section III		
	Design pressure and temperature	Class 3 and TEMA Class C		
	Stress limit			
	ASME Section III	a Shell	0.896 in.	1.0 in.
		b. Shell cover	0.885 in.	0.885 in.
		c. Channel	0.924 in.	1.0 in.
		d. Tubes	0.0515 in.	0.054 in.
		e. Channel cover	8.11 in.	8.12 in.
		f. Tube sheet	7.08 in.	7.12 in.

Table 3.9-2o

Residual Heat Removal Heat Exchanger (Continued)

	Loading/Component	Criteria/Location	Allowable Stress (psi)	Actual Stress (psi)
3.	Nozzle	The maximum moments due to pipe reaction and the maximum forces shall not exceed the allowable limits.	(a) (b)	
	Loads: faulted			
	Design pressure and temperature	Primary Stress Smaller of $0.75\ S_u$ or $2.4\ S_m$		
	Dead weight, thermal expansion,			
	Safe shutdown earthquake SRV, LOCA	ASME Section III allowable.		
4.	Support brackets and attachment welds	Stress allowables as per ASME Section III Subsection NF (upset condition).		
	Loads: faulted			
	Design pressure and temperature, dead weight, nozzle loads, safe shutdown earthquake, safety/relief valve	Lower bracket welds - Principal stress	 14,438	 7,400
5.	Anchor bolts	Stress allowable as per ASME III, Appendix XVII		
	Loads: faulted			
	Design pressure and temperature, dead weight, nozzle loads, SSE, S/RV	Lower support bolting - Tension - Shear	 29,000 11,990	 14,421 2,592

Table 3.9-2o

Residual Heat Removal Heat Exchanger (Continued)

	Loading/Component	Criteria/Location	Allowable Stress (psi)	Actual Stress (psi)
6.	Shell adjacent to support brackets	Shell stress allowables as per ASME Section III Subsection NC (Upset Conditions).		
	Loads: faulted			
	Design pressure and temperature, dead weight, nozzle loads, SSE, SRV	a. Maximum principal stress adjacent to upper support	28,875	24,825
		b. Maximum principal stress adjacent to lower support	28,875	27,053
7.	Shell	Stress allowable as per ASME Section III Subsection NC (upset condition)		
	Loads: faulted			
	Design pressure and temperature, dead weight, nozzle loads, SSE, SRV	Principal	19,250	11,908

[a] Maximum allowable piping load combinations for faulted conditions (including SSE) do not exceed the following relationship for each nozzle:

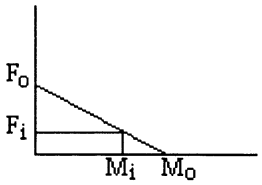

$$\left|\frac{F_i}{F_o}\right| + \left|\frac{M_i}{M_o}\right| \leq 1$$

where:

F_i = The largest of the three actual external orthogonal forces (F_x, F_y, and F_z).

M_i = The largest of the three actual external orthogonal moments (M_x, M_y, and M_z) for the same reference coordinates.

F_o = The allowable value of F_i when all moments are zero.

M_o = The allowable value of M_i when all forces are zero.

Table 3.9-2o

Residual Heat Removal Heat Exchanger (Continued)

One coordinate axis must be the nozzle centerline. Another coordinate axis must be parallel to the heat exchanger centerline except where the heat exchanger centerline is parallel to the nozzle centerline. In this case, the coordinate axis must be orthogonal to the nozzle centerline and at 0°-180° or 90°-270° azimuths.

[b] Allowable limits (design basis)

	N1	N2	N3	N4
F_x =	15,500 lb	15,500 lb	15,500 lb	15,500 lb
F_y =	15,500 lb	15,500 lb	15,500 lb	15,500 lb
F_z =	15,500 lb	15,500 lb	15,500 lb	15,500 lb
M_x =	60,000 ft-lb	60,000 ft-lb	60,000 ft-lb	60,000 ft-lb
M_y =	60,000 ft-lb	60,000 ft-lb	60,000 ft-lb	60,000 ft-lb
M_z =	60,000 ft-lb	60,000 ft-lb	60,000 ft-lb	60,000 ft-lb

Table 3.9-2p

Reactor Water Cleanup Pump

Following is a summary of the design calculations on the RWCU Pump:

Part(ASME Code Calculation)	Calculated Stress (psi)	Allowable Stress (psi)
Pump part		
Casing wall	10,476	12,814
Suction wall	5,112	12,814
Discharge wall	3,337	12,814
Cover bolting	23,032	30,750
Seal gland bolting	26,532	30,750
Pedestal bolt (shear)	18,015	44,000
Motor part		
Motor foot bolts (shear)	3787	44,000

Table 3.9-2q

Not Used

Table 3.9-2r

Reactor Core Isolation Cooling Pump

Criteria/Loading	Component	Limiting Stress Type	Allowable Stress (psi)	Calculated Stress (psi)
Pressure boundary stress limits of the various components for the RCIC pump assembly are based on the ASME B&PV Code Section III, for pressure boundary parts @ 140°F.				
1. Forged barrel, SA105 GR.II S_Y = 36,000 psi				
2. End cover plates, SA105 GR.II S_Y = 36,000 psi				
3. Nozzle connections, SA105 GR.II S_Y = 36,000 psi				
4. Aligning pins, SA105 GR.II S_Y = 36,000 psi				
5. Closure bolting, SA193-B7 S_Y = 107,000 psi				
6. Pump holddown bolting, SA325 S_Y = 77,000 psi				
7. Taper pins, SA108 GR. B1112, S_Y = 75,000 psi				
Normal and upset condition loads:				
1. Design pressure	1. Forged barrel	General membrane		
2. Design temperature	2. End cover	General membrane		
3. Operating basis earthquake	(Suction)	General membrane		
4. Suction nozzle loads	3. End cover	General membrane	(a)	
5. Discharge nozzle loads	(Discharge)	Shear		
	4. Nozzle reinforcement	Tensile shear		
	5. Alignment pin	Tensile		
	6. Closure bolting			
	7. Taper pins			
	8. Pump holddown bolts			

Table 3.9-2r

Reactor Core Isolation Cooling Pump (Continued)

Criteria/Loading	Component	Limiting Stress Type	Allowable Stress (psi)	Calculated Stress (psi)
Emergency or faulted condition loads:[b]				
1. Design pressure	1. Pump holddown bolts	Tension	12,800	12,646
2. Design temperature	2. Taper pins (bearing housing)	Shear	15,000	2,230
3. Safe shutdown earthquake	3. Alignment pin	Shear	17,500	2,680
4. Suction nozzle loads	4. Pump outer case	General membrane	17,500	7,052
5. Discharge nozzle loads	5. Discharge nozzle	General membrane	26,250	7,855

Nozzle load definitions:

Units: Forces - lb
Moments - ft-lb

The allowable combinations of forces and moments are as follows:

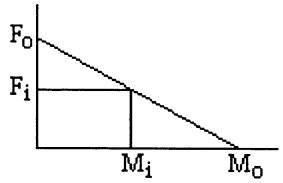

$$\frac{F_i}{F_o} + \frac{M_i}{M_o} \leq 1$$

where:

F_i = Largest absolute value of the three actual external orthogonal forces (F_x, F_y, F_z) that maybe imposed by the interface pipe and,

M_i = Largest absolute value of the three actual external orthogonal forces (M_x, M_y, M_z) permitted from the interface pipe when they are combined simultaneously for a specific condition.

Table 3.9-2r

Reactor Core Isolation Cooling Pump (Continued)

Criteria/Loading	Component	Limiting Stress Type	Allowable Loads (lb. ft-lb)	Calculated Loads (lb. ft-lb)
Normal and upset condition loads:		F_o = Allowable value of F_i when all moments are zero	Suction: F_o = 1940 M_o = 2460	Less than or equal to allowable
1. Design pressure				
2. Design temperature				
3. Weight of structure				
4. Thermal expansion		M_o = Allowable value of M_i when all forces are zero	Discharge: F_o = 3715 M_o = 4330	Less than or equal to allowable
5. Operating basis earthquake				
Emergency or faulted condition loads:				
1. Design pressure			Suction: F_o = 2325 M_o = 2950	Less than or equal to allowable
2. Design temperature				
3. Weight of structure				
4. Thermal expansion				
5. Safe shutdown earthquake			Discharge: F_o = 4450 M_o = 5200	Less than or equal to allowable
where:				
F_i = The largest absolute value of the three actual external orthogonal forces (F_x, F_y, F_z) that may be imposed by the interface pipe and	Emergency or faulted condition loads: Design pressure and temperature Dead weight & thermal expansion Safe shutdown earthquake			

Table 3.9-2r

Reactor Core Isolation Cooling Pump (Continued)

Criteria/Loading	Component	Limiting Stress Type	Allowable Loads (lb. ft-lb)	Calculated Loads (lb. ft-lb)
M_i = The largest absolute value of the three actual external orthogonal moments (M_x, M_y, M_z) permitted from the interface pipe when they are combined simultaneously for a specific condition.				

[a] Calculated stresses for emergency or faulted condition are less than the allowable for normal plus upset condition, therefore the normal and upset condition is not evaluated.

[b] Per Regulatory Guide 1.48, the allowable stresses under faulted condition are 1.2 times those under the upset conditions.

Note: Operability static analysis for emergency or faulted condition show that the maximum shaft deflection is 0.0038 in. with 0.0055 in. allowable, shaft stresses are 5975 psi with 17,200 psi allowable, and bearing loads of, drive end 376 lb with 7670 lb allowable and thrust end 1323 lb with 17,200 lb allowable.

Table 3.9-2s

Reactor Refueling and Servicing Equipment[a]
New Fuel Storage Racks

Acceptance Criteria	Loading	Primary Stress Type	Allowable Stress (psi)	Calculated Stress (psi)
The allowable stress is based on Part 1 of AISC Manual for type ASTM B221, 6061-T6 Alum Alloy F_u = 38,000 psi F_Y = 35,000 psi				
For normal condition: S_{Limit} = 0.66 F_Y	Normal operating loads	Axial load plus bending	23,100	15,230[a]
For emergency condition[bc]: S_{Limit} = 0.88 F_Y	Normal operating loads Operating basis earthquake Safety/relief valve Loss-of-coolant accident	Axial load plus bending	30,800	<30,800[a]
For faulted condition[bc]: S_{Limit} = 0.88 F_Y	Normal operating loads Operating basis earthquake Safety/relief valve Loss-of-coolant accident	Axial load plus bending	30,800	<30.800[a]

Table 3.9-2s

Reactor Refueling and Servicing Equipment[a] (Continued)
Refueling Platform

Acceptance Criteria	Loading	Primary Stress Type	Allowable Stress (psi)	Calculated Stress (psi)
The allowable axial load stress is based on AISC Part 5, Section 1.5 for type ASTM A36 Structural Steel F_u = 58,000 psi F_y = 36,000 psi				
For normal condition: $S_{Limit} = 0.66 F_Y$	Static	Axial load plus bending	23,760	3,597
For emergency condition: $S_{Limit} = 0.88 F_Y$	Normal operating loads Operating basis earthquake Safety/relief valve	Axial load plus bending	31,680	32,040[d]
For faulted condition: $S_{Limit} = 0.7 F_u$	Normal operating loads Safe shutdown earthquake Safety/relief valve Loss-of-coolant accident	Axial load plus bending	40,600	26,064

Table 3.9-2s

Reactor Refueling and Servicing Equipment[a] (Continued)
Fuel Preparation Machine

Acceptance Criteria	Loading	Primary Stress Type	Allowable Acceleration[e]	Calculated Acceleration[e]
The allowable axial load stresses are based on AISC Code; ASME Code Section III for 320 S.S. Side Plates 17-4 PH and 17-7 PH Rollers. F_Y = 30,000 psi F_u = 75,000 psi $S_{m\,200}$ = 17,800 psi				
For normal condition:	Static	Axial load	1.56	1.00
For upset/emergency condition:	Normal operating loads Operating basis earthquake Safety/relief valve	Axial load	2.11	1.24
For faulted condition:	Normal operating loads Safe shutdown earthquake Safety/relief valve Loss-of-coolant accident	Axial load	4.61	1.40

[a] Calculated stresses are recorded in GE document 386HA625, "Load Combinations and Acceptance Criteria for Reactor Refueling and Servicing Equipment."

[b] A one-third margin is added to the normal limit to obtain the upset limit per AISC, 7th Edition, Part 1, Section 1.5.6.

[c] The upset allowable is used to evaluate emergency and faulted conditions for conservatism.

[d] Due to structural response and damping effects, the OBE produces greater stresses at this location than does the SSE. One member yields in the plastic material range but does not impair the functional use of the equipment. Operability assurance is demonstrated by analysis.

[e] Equivalent g-load. Operability assurance is demonstrated by analysis.

Table 3.9-2t

Not Used

Table 3.9-2u

Control Rod Drive (Indicator Tube)

Acceptance Criteria	Loading	Stress Type	Allowable Stress (psi)	Calculated Stress (psi)
Allowable primary membrane stress plus bending stress is based on ASME Boiler and Pressure Vessel Code Section III.				
For normal and upset condition: $S_{allow} = 1.5 \times S_m$	1. Normal loads[a] 2. Scram with OBE and SRV	$(P_M + P_B + Q)$[b] $(P_M + P_B)$[b]	51,700 25,860	47,100 24,728
For emergency condition: $S_{allow} = 1.8 \times S_m$	1. Normal loads[a] 2. Chugging 3. Safety/relief valve 4. Scram	$(P_M + P_B)$[b]	31,000	24,728[c]
For faulted condition: $S_{allow} = 3.6 \times S_m$ @ weld joint	1. Normal loads[a] 2. Scram 3. Safe shutdown earthquake 4. Safety/relief valve 5. Chugging	$(P_M + P_B)$[b]	40,000	37,600

[a] Normal loads (include pressure, temperature, weight, and mechanical loads.

[b] P_M = Primary membrane stress, P_B = Primary bending stress,
Q = Secondary membrane and secondary bending stresses.

[c] Less severe than the upset condition $P_M + P_B$ calculated stress.

Table 3.9-2v

Control Rod Drive Housing

Acceptance Criteria	Loading	Primary Stress Type	Allowable Stress (psi)	Calculated Stress (psi)
Primary stress limit - The allowable primary membrane stress is based on the ASME Boiler and Pressure Vessel Code, Section III, Class I, for Type 304 stainless steel.				
For normal and upset condition: $S_{limit} = 1.0\ S_m$ $= 16{,}660$ psi @ 575°F	1. Design pressure 2. Stuck rod scram loads 3. Operational basis earthquake, with housing lateral support installed 4. Safety/relief valve	Maximum membrane stress intensity occurs at the tube weld near the center of the housing for normal, upset, emergency, and faulted conditions.	24,900	15,450
For faulted conditions: $S_{limit} = 29{,}880$	1. Design pressure 2. Stuck rod scram loads 3. Safe shutdown earthquake, with housing lateral support installed 4. Safety/relief valve 5. Loss-of-coolant accident	Membrane plus bending	29,880	18,180

Note: Emergency condition results are not shown because they are less than normal/upset dynamic loads. This occurs because the emergency condition includes primarily vertical accelerations which have less effect on this long vertical tube than the horizontal accelerations of the OBE loading in normal and upset.

Table 3.9-2w

Jet Pumps

Acceptance Criteria	Loading/Combinations	Stress Type	Allowable Stress (psi)	Calculated Stress (psi)
Primary membrane plus bending stress based on ASME B&PV Code Section III Subsection NG				
For service levels A and B (normal and upset) condition: For Type 304 S.S. @ 550°F S_m = 16,800 psi S_{Limit} = 1.5 S_m psi	Normal loads[a] Operating basis earthquake Safety/relief valve	Primary membrane plus bending	50,700	17,640[b]
For service levels C (emergency) condition: For Type 304 S.S. @ 550°F S_m = 16,800 psi S_{Limit} = 2.25 S_m psi	Normal loads[a] Chugging Safety/relief valve	Primary membrane plus bending	37,800	15,505[b]
For service levels D (faulted) condition: For Type 304 S.S. @ 550°F S_m = 16,800 psi S_{Limit} = 3.6 S_m psi	Normal loads[c] Annulus pressurization Jet reaction Safe shutdown earthquake	Primary membrane plus bending	60,480	54,450[b]

[a] Design internal pressure, hydraulic and pressure reaction loads.

[b] Riser brace only. Stresses on other components are much lower.

[c] Design external pressure, hydraulic and pressure reaction loads.

Table 3.9-2x

Not Used

Table 3.9-2y

Low-Pressure Coolant Injection Coupling

Acceptance Criteria	Loading	Stress Type	Allowable Stress (psi)	Calculated Stress (psi)
Primary membrane plus bending stress based on ASME B&PV Code Section III for Type 316L Stainless Steel.				
For service levels A and B (normal and upset) condition: $S_{limit} = 3\ S_m = 41,850$ psi	Normal loads Operating basis earthquake SRV_{ALL}	Primary and secondary membrane plus bending	41,850	13,455
For service levels C (emergency) condition: $S_{limit} = 2.25\ S_m = 31,400$ psi	Normal Loss-of-coolant accident (chugging) SRV_{ADS}	Primary membrane plus bending	31,400	22,938
For service levels D (faulted) condition: $S_{limit} = 3.6\ S_m = 50,220$ psi	Normal Safe shutdown earthquake Loss-of-coolant accident (annulus pressurization)	Primary membrane plus bending	50,220	41,329

Table 3.9-2z

Not Used

Table 3.9-2aa

Control Rod Guide Tube

Acceptance Criteria	Loading	Primary Stress Type	Allowable Stress (psi)	Calculated Stress (psi)[a]
Primary stress limit The allowable primary membrane stress plus bending stress is based on the ASME Boiler and Pressure Vessel Code, Section III for type 304 stainless steel tubing..				
For normal and upset conditions: $S_{limit} = 1.5\ S_m = 1.5 \times 16{,}000$ $S_{limit} = 24{,}000$ psi	Applied loads: 1. Delta pressure force 2. Metal and water weight 3. Operating basis earthquake 4. Safety/relief valve	Applying vertical seismic plus dead weight, the maximum stress under normal and upset conditions occurs at the guide tube base. Primary membrane plus bending	24,000	8,189
For faulted conditions $S_{limit} = 2.4\ S_m = 2.4 \times 16{,}000$ $= 38{,}400$ psi	Applied loads: 1. Delta pressure force 2. Metal and water weight 3. Safe shutdown earthquake 4. Safety/relief valve 5. Local (chugging)	Applying vertical seismic plus dead weight, the maximum stress under faulted conditions occurs at the guide tube base. Primary membrane plus bending	38,400	13,169

[a] Because of different loading conditions, calculated stresses for emergency conditions are less severe than the normal and upset condition loads.

Table 3.9-2ab

Incore Housing

Acceptance Criteria	Loading	Primary Stress Type	Allowable Stress (psi)	Calculated Stress (psi)
Primary stress limit The allowable Primary Membrane Stress plus Bending Stress is based on the ASME Boiler and Pressure Vessel Code, Section III for Class 1 vessels for type 304, SA 213 stainless steel tubing.		Maximum membrane stress intensity occurs at the outer surface of the vessel penetration (including bending stresses)		
For normal and upset conditions: S_m = 16,660 psi at 575°F	1. Design pressure 2. Operating basis earthquake 3. Safety/relief valve		16,660	15,548
For faulted condition S_{limit} = 2.4 S_m = 2.4 x 16,660 = 39,984	1. Design pressure 2. Safe shutdown earthquake 3. LOCA (annulus pressure) 4. Jet reaction	Maximum membrane stress intensity occurs at the outer surface of the vessel penetration (including bending stresses)	39,984	25,796

Table 3.9-2ac

Reactor Vessel Support Equipment
(i) Control Rod Drive Housing Support

Acceptance Criteria	Loading	Location	Allowable Stress (psi)	Calculated Stress (psi)
Primary stress limit				
AISC specification for the design, fabrication and erection of structural steel for buildings	Faulted condition loads 1. Dead weight	Beams (top chord)	33,000 33,000	f_a = 12,200 f_a = 16,500
	2. Impact force from failure of a CRD housing	Beams (bottom chord)	33,000 33,000	f_a = 10,300 f_b = 11,700
For normal and upset condition $f_a = 0.60\ f_Y$ (tension) $f_b = 0.60\ f_Y$ (bending) $f_v = 0.40\ f_Y$ (shear)	(Dead weight and earthquake loads are very small as compared to jet force)	Grid structure	41,500 27,500	f_b = 40,700 f_v = 11,100
For faulted conditions: f_a limit = 1.5 f_a (tension) f_b limit = 1.5 f_b (bending) f_v limit = 1.5 f_v (shear) f_Y = Material yield strength				

Table 3.9-2ac

Reactor Vessel Support Equipment (Continued)
(ii) Reactor Pressure Vessel Stabilizer

Acceptance Criteria	Loading	Location	Allowable Stress (psi)	Calculated Stress (psi)
Primary stress limit				
AISC specifications for the construction, fabrication, and erection of structural steel for buildings				
For normal and upset conditions AISC allowable stresses, but without the usual increase for earthquake loads	Upset condition	Rod	84,000[a]	f_t = 54,000
	1. Spring preload	Bracket	22,000	f_b = 22,000
	2. Operating basis earthquake	Bracket	14,000	f_v = 4,600
For emergency conditions 1.5 x AISC allowable stresses	Emergency condition	Bracket	33,000	F_b = 24,400
	1. Spring preload	Bracket	21,000	f_b = 22,000
	2. Design basis earthquake	Rod	126,000[b]	f_v = 108,000
For faulted conditions Material yield strength	Faulted condition			
	1. Spring preload	Bracket	36,000	f_b = 26,000
	2. Design basis earthquake	Bracket	21,500	f_v = 11,330
	3. Jet reaction load	Rod	140,000	f_t = 132,000

[a] 0.6 x yield based on the AISC criterion for tension.

[b] 1.5 x normal and upset limit.

Table 3.9-2ac

Reactor Vessel Support Equipment (Continued)
(iii) Reactor Pressure Vessel Support (Bearing Plate)

Acceptance Criteria	Loading	Location	Allowable Stress (psi)	Calculated Stress (psi)
Primary stress limit AISC specification for the design, fabrication and erection of structural steel for buildings				
For normal and upset conditions AISC allowable stresses, but without the usual increase for earthquake loads	Normal and upset condition 1. Dead loads 2. Operating basis earthquake 3. Loads due to scram	Bearing plate	22,000[a]	f_b = 8,000
For emergency conditions	Emergency condition 1. Dead loads 2. Design basis earthquake 3. Loads due to scram	Bearing plate	33,000[b]	f_b = 16,000
For faulted conditions	Faulted condition 1. Dead loads 2. Design basis earthquake 3. Jet reaction load	Bearing plate	36,000[c]	f_b = 16,800

[a] Two-thirds of yield strength for bending gives 24,000 psi, but 22,000 psi is used for conservatism.

[b] A 1.5 factor is applied to the normal and upset limit since the emergency condition is not critical for an inactive equipment.

[c] For A-36 material, the yield strength is 36,000 psi.

Table 3.9-2ac

Reactor Vessel Support Equipment (Continued)
(iv) Stabilizer Bracket-Adjacent Shell

Acceptance Criteria	Loading	Location	Allowable Stress (psi)	Calculated Stress (psi)
ASME B and PVC Section III Primary Local Membrane Plus Primary Bending Limit for SA 533 Grade B, Class 1:				
For design mechanical load condition: 1.5 x 26,700 = 40,050	Design mechanical load 1. Design earthquake (operating basis earthquake) 2. Design pressure	Local membrane plus bending	40,050	37,635
For faulted and emergency condition: 1.5 Sy = 63,450	Faulted and emergency condition load: 1. Maximum credible earthquake (design basis earthquake) 2. Jet reaction forces 3. Design pressure	Local membrane plus bending	63,450	57,745

Note: Faulted category loads were evaluated with emergency allowable stresses.

Table 3.9-3

Load and Stress Criteria For
ASME Code Section III Class 1 Piping

Criteria	Load Combination
The required minimum wall thickness, t_m, for piping under internal design pressure is calculated by using the indicated formula, Equation (1). The actual minimum wall thickness, t_a, must be equal to or greater than the required minimum wall thickness, t_m. Thus $t_m = \frac{PD_o}{2(S_m + yP)} + A$ (See note 1)	Design pressure (P)
Primary stress intensity is calculated by Equation (9) for any normal and upset condition loading combination. The maximum calculated value is 1.5 S_m	Design pressure Weight Other sustained mechanical loads Inertia effects due to occasional mechanical loads as specified in Table 3.9-2
Primary plus secondary stress intensity range for every pair of load sets is calculated by Equation (10) $\leq$ 3 S_m (see note 2)	Operating pressure Mechanical loads other than weight Inertia effect due to normal and upset occasional mechanical loads as specified in Table 3.9-2 Anchor movements due to any cause Thermal expansion Linear temperature gradient at pipe wall and thermal effects of gross discontinuity

Table 3.9-3

Load and Stress Criteria for
ASME Code Section III Class 1 Piping (Continued)

Criteria	Load Combination
If Equation (10 cannot be satisfied for all load sets, then for those pairs of load sets which do not satisfy Equation 10):	
The nominal value of expansion stress is calculated by Equation (12) $\leq 3S_m$	Thermal anchor movements Thermal expansion
The range of primary plus secondary membrane plus bending stress intensity, excluding thermal bending and thermal expansion stresses, are calculated by Equation (13) $\leq 3S_m$	Operating pressure Weight plus other sustained mechanical loads Inertia effect due to normal and upset occasional mechanical loads as specified in Table 3.9-2 Thermal effect of gross discontinuity

For every pair of load sets the peak stress intensity range (S_p) is calculated by Equation (11) due to operating pressure, mechanical loads other than weight, inertia effect of normal upset occasional mechanical loads, anchor movement due to any cause, thermal expansion, temperature gradient at pipe wall, and thermal effects of gross discontinuity.

The alternating stress intensity (S_{alt}) is calculated as follows:

1/2 S_p, for every pair of load sets where Equation (10) is satisfied.

[(K_e) (1/2) (S_p)], for every pair of loads sets, where Equation (10) cannot be satisfied, but Equations (12) and (13) are satisfied. (K_e) is as defined in NB-3653.6.

The appropriate design fatigue curve is used to determine the number of allowable cycles (N_i) corresponding to the alternating stress intensity, for every pair of load sets. The usage factor (U_i), is calculated by taking the expected number of load set cycles (N_i) and dividing this value by (N_i).

The cumulative usage factor (U), which is the sum of the individual usage factors (U_i), is calculated

Table 3.9-3

Load and Stress Criteria for
ASME Code Section III Class 1 Piping (Continued)

Criteria	Load Combination
Cumulative Usage Factor (U) ≤ 1.0	
The permissible pressure under any emergency condition is shown not to be greater than 1.5 times the design pressure (P)	N/A
The permissible pressure under any faulted condition is shown not to be greater than 2 times the design pressure (P) (see note 3)	N/A
The primary stress intensity is calculated by Equation (9) for any emergency condition loading combination. The maximum calculated value is ≤ 2.25 S_m.	Peak pressure Weight Other sustained mechanical loads Inertia effects due to occasional mechanical loads as specified in Table 3.9-2
The primary stress intensity is calculated by Equation (9) for any faulted condition loading combination (see note 3). The maximum calculated value is ≤ 3.0 S_m.	Pressure Weight Other sustained mechanical loads Inertia effects of occasional mechanical loads as specified in Table 3.9-2

NOTES:

1. All equations and symbols are as defined in ASME Code Section III, Subarticle NB-3600.

2. This need not be satisfied if the rules of ASME Code Section III, Paragraph NB-3653.6 are complied with.

3. This need not be satisfied if other rules, as set forth in ASME Code Section III Appendix F are complied with.

Table 3.9-4

Load and Stress Criteria for ASME Code
Class 2 and 3 Piping System

Criteria	Load Combination
The required minimum wall thickness, t_m, for piping under internal design pressure is calculated by using the indicated formula, Equation (3). The actual minimum wall thickness, t_a, must be equal to or greater than the required minimum wall thickness, t_m. Thus $t_m = \frac{PD_o}{2(S_m + yP)} + A$ (See notes 1 and 2)	Design pressure (P)
The sum of the longitudinal stresses due to pressure, weight, and sustained loads are calculated by Equation (8) $\leq 1.0\ S_h$.	Design pressure Weight Other sustained mechanical loads
The sum of the longitudinal stresses due to pressure, weight, sustained loads, and inertia effects of normal and upset occasional loads are calculated by Equation (9) $\leq 1.2\ S_h$.	Peak pressure (see note 3). Weight Sustained mechanical loads Inertia effects of occasional mechanical loads as specified in Table 3.9-2
The thermal expansion stress range, including effects of anchor displacement due to normal and upset occasional mechanical loads are calculated by Equation (10) $\leq S_a$ (see note 4).	Thermal expansion Anchor movements due to thermal expansion
The sum of the longitudinal stresses due to pressure, weight, and other sustained loads, plus the thermal expansion stress range, including effects of anchor displacement due to thermal expansion and normal and upset occasional	Design pressure Weight Other sustained mechanical loads Thermal expansion Anchor displacements due to

Table 3.9-4

Load and Stress Criteria for ASME Code
Class 2 and 3 Piping System (Continued)

Criteria	Load Combination
mechanical loads are calculated by Equation (11) ≤ (S_h + S_a) (see note 4).	thermal expansion and normal and upset mechanical loads as specified in Table 3.9-2
The sum of the longitudinal stresses due to pressure, weight, sustained loads, inertia effects of Emergency condition mechanical loads are calculated by Equation (9) ≤ 1.8 S_h.	Design pressure Weight Other sustained mechanical loads Inertia effect of occasional mechanical loads as specified in Table 3.9-2
The sum of the longitudinal stresses due to pressure, weight, sustained loads, inertia effects of faulted condition mechanical loads are calculated by Equation (9) ≤ 2.4 S_h.	Peak pressure (see note 3) Weight Other sustained mechanical loads Inertia effect of occasional mechanical loads as specified in Table 3.9-2

NOTES:

1. All equations and symbols are defined in ASME Code Section III, Subarticle NC-3600.

2. Joint efficiency (E) is as defined in ASME Code Section III, Paragraph ND-3641.1. For ASME Code Class 2 piping E equal to 1.0 is used.

3. Design pressure may be used if the Design Specification states that peak pressure and earthquake need not be taken as acting concurrently.

4. The requirements of either Equation (10) or Equation (11) must be met.

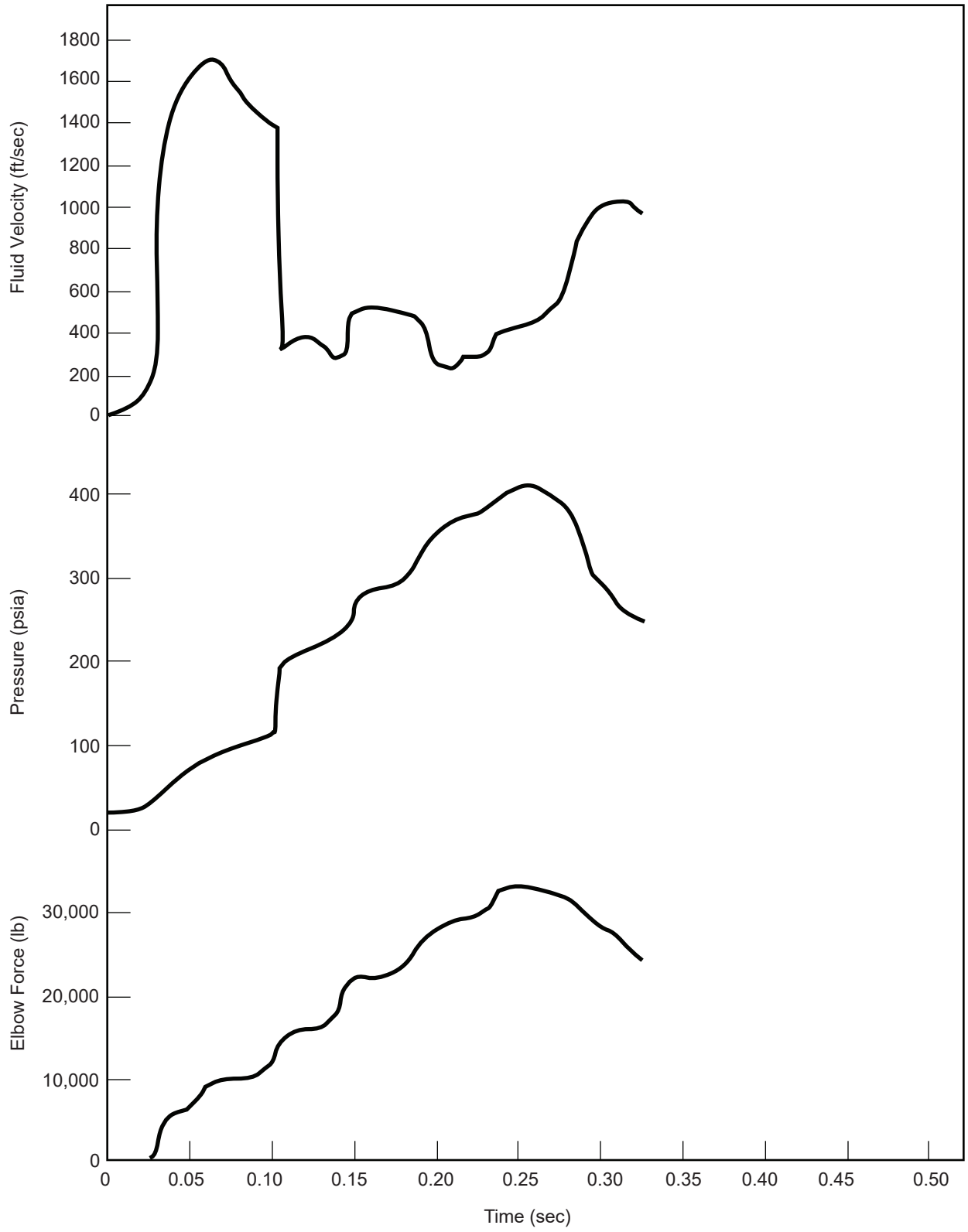

Typical Relief Valve Transient

Columbia Generating Station
Final Safety Analysis Report

Draw. No. 990306.79	Rev.	Figure 3.9-1

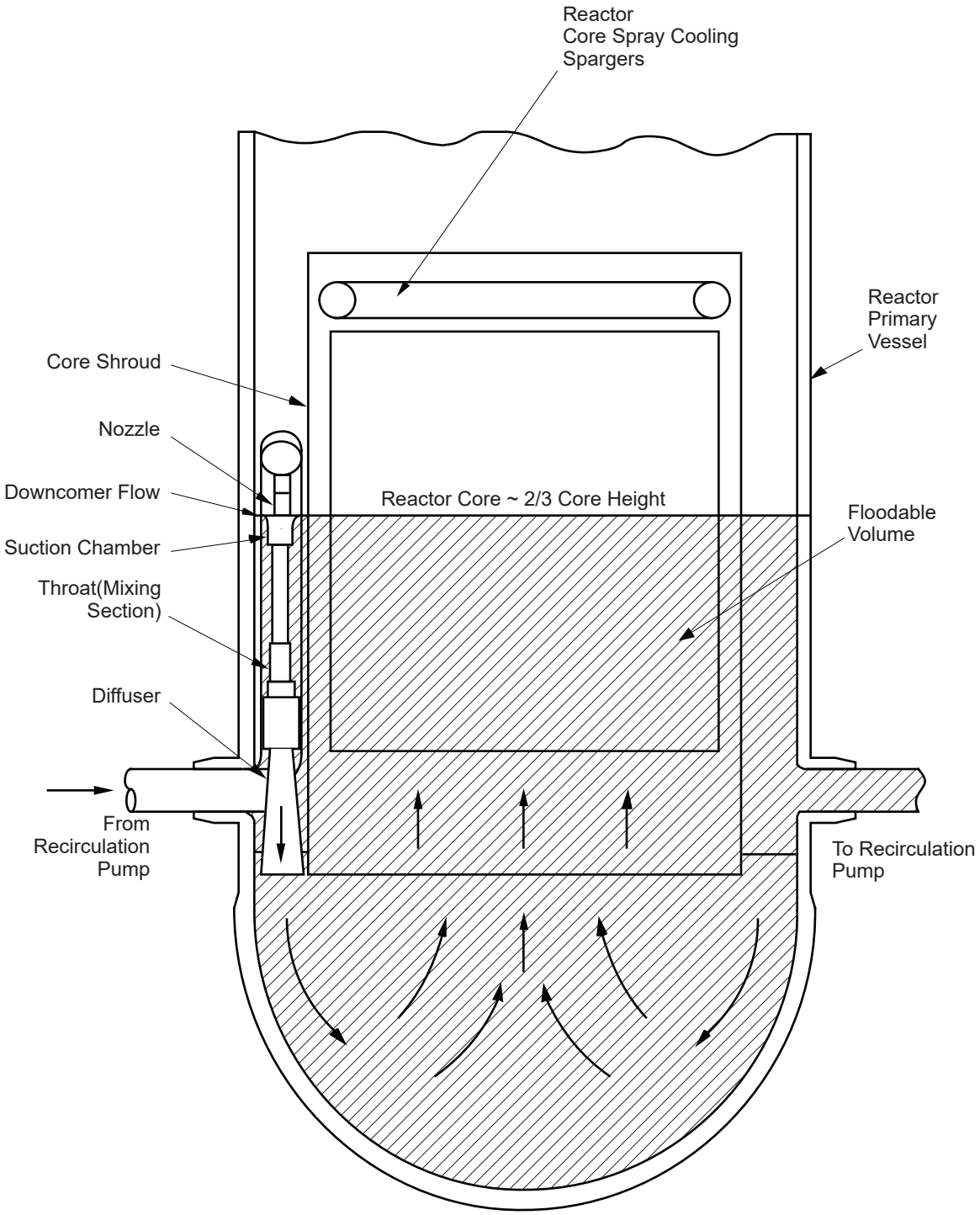

Columbia Generating Station
Final Safety Analysis Report

Reactor Internals Flow Paths

Draw. No. 990306.80	Rev.	Figure 3.9-2

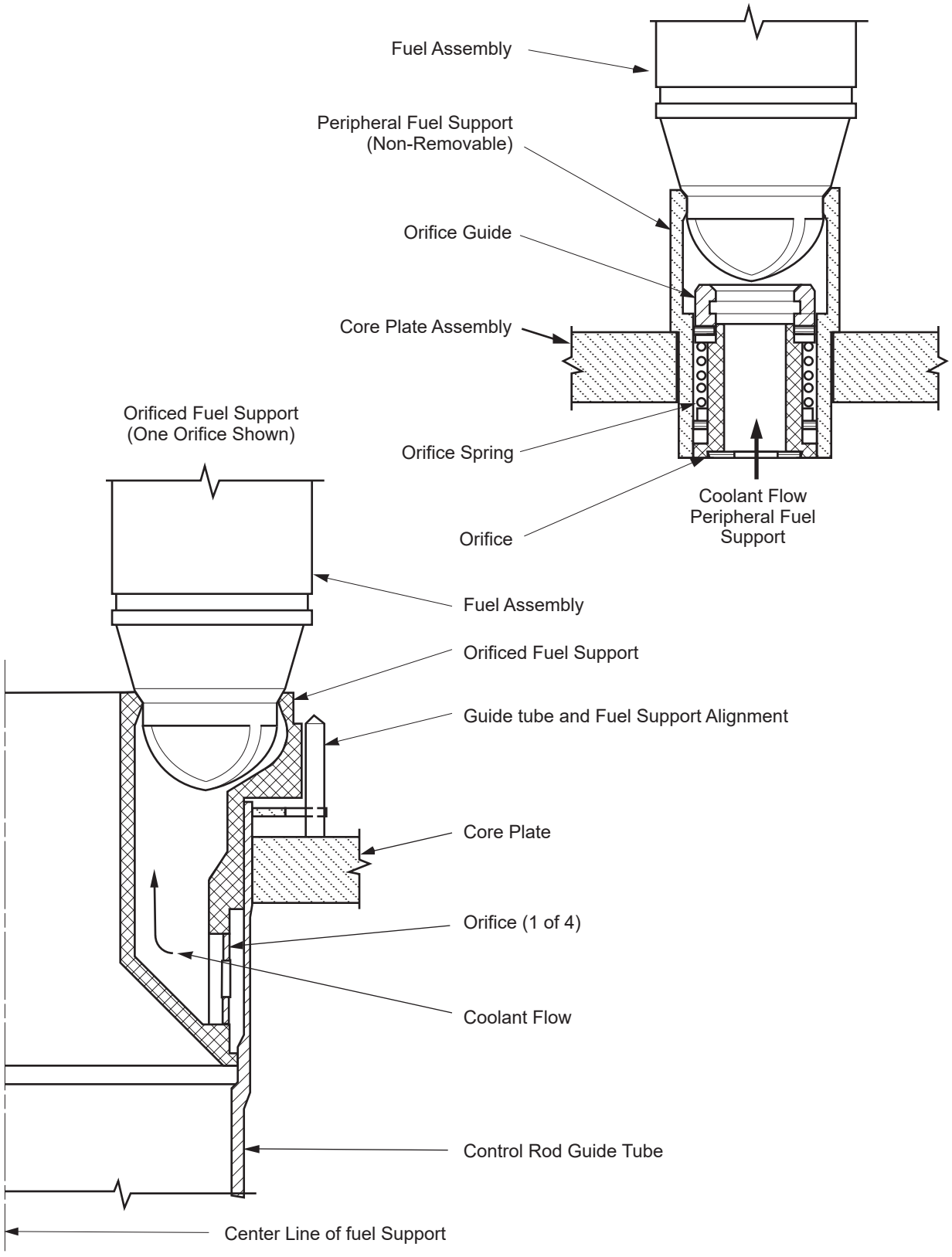

Columbia Generating Station
Final Safety Analysis Report

Fuel Support Pieces

Draw. No. 990306.81	Rev.	Figure 3.9-3

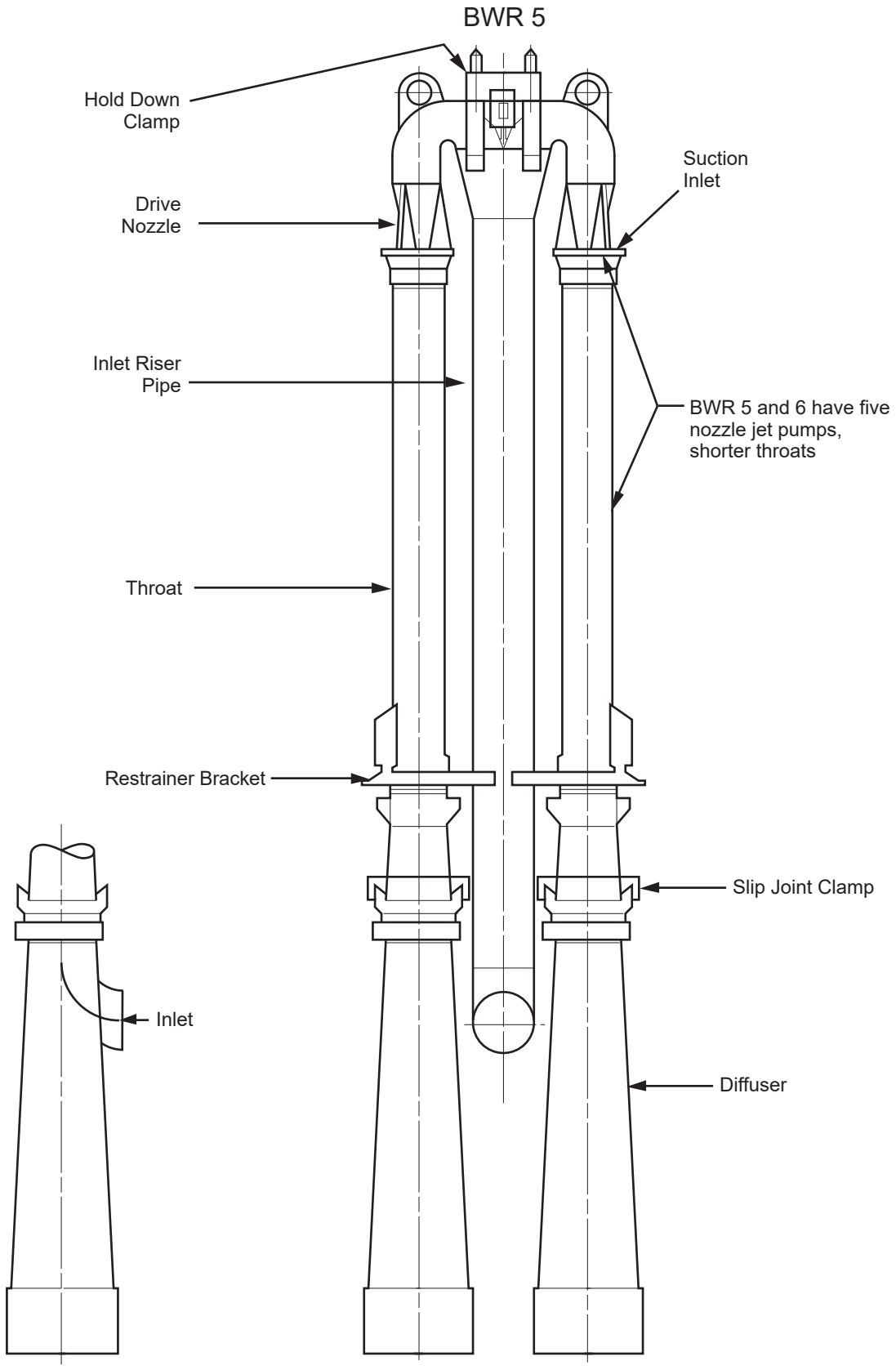

Columbia Generating Station
Final Safety Analysis Report

Jet Pump

Draw. No. 990306.82	Rev.	Figure 3.9-4

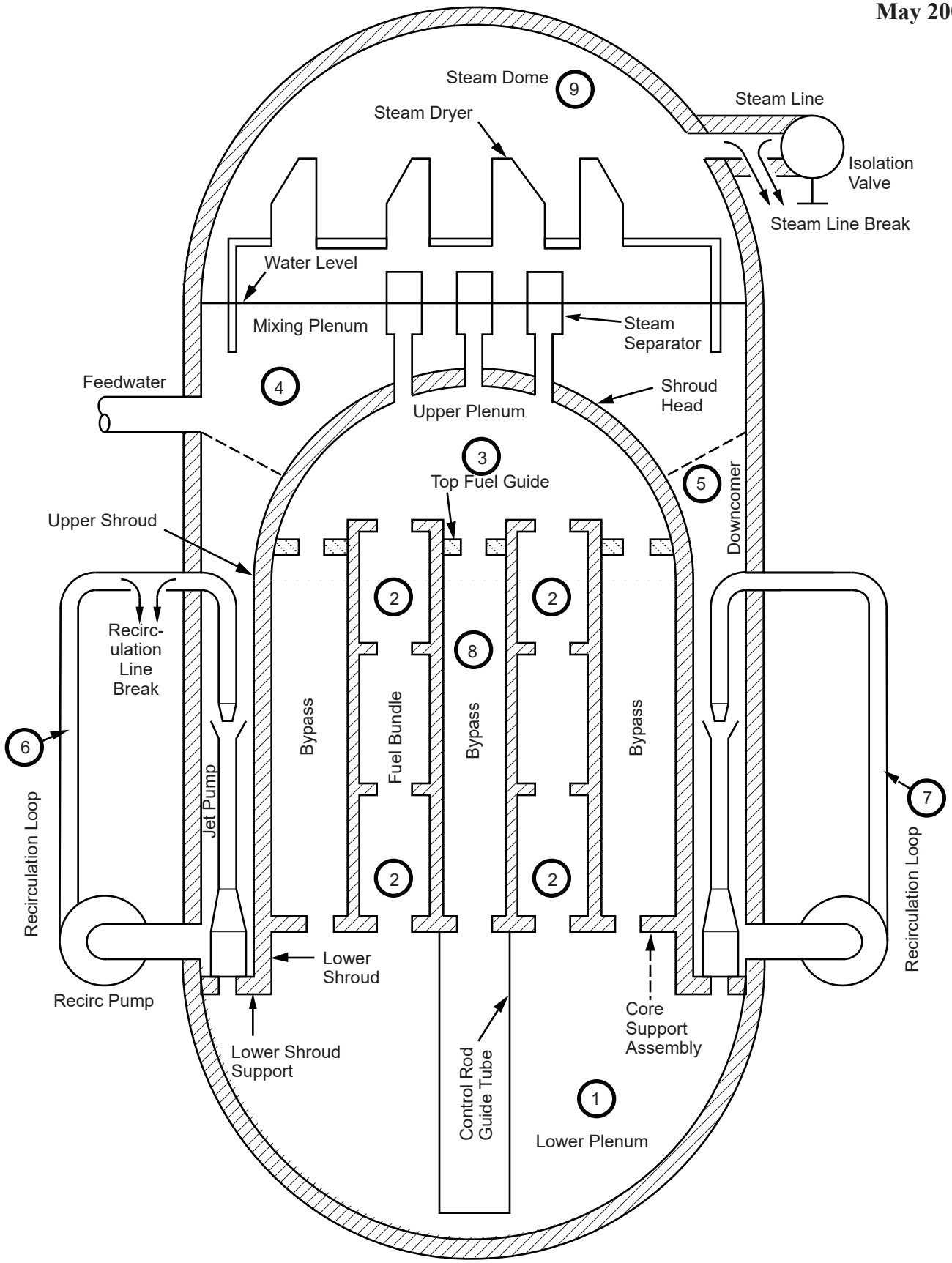

Columbia Generating Station
Final Safety Analysis Report

Pressure Nodes Used For Depressurization Analysis

Draw. No. 990306.83	Rev.	Figure 3.9-5

3.10 SEISMIC AND DYNAMIC QUALIFICATION OF SAFETY-RELATED INSTRUMENTATION AND ELECTRICAL EQUIPMENT

3.10.1 SEISMIC AND DYNAMIC QUALIFICATION CRITERIA

3.10.1.1 Safety-Related Equipment Identification

The Master Equipment List (MEL) is a computerized database of CGS equipment identification numbers and related information. The Safety Related Mechanical (SRM) list is a subset of MEL which contains all of the mechanical (nonelectrical) equipment which is in engineered safety features and reactor protection systems. The seismic and dynamic qualification of SRM equipment is discussed in Section 3.9.2.2. The equipment on the C1E list, also a subset of MEL, and the equipment necessary for the operators to follow the course of an accident (Regulatory Guide 1.97) are addressed in Section 3.10. The C1E list also includes equipment supporting structures (cabinets, racks, etc.). Class 1E is defined per IEEE 323-1974 as the safety classification of the electric equipment and systems that are essential to emergency reactor shutdown, containment isolation, reactor core cooling, and containment and reactor heat removal, or otherwise are essential in preventing significant release of radioactive material to the environment.

All parameters required to perform the qualification evaluation have been determined, including normal and accident operational requirements, operating data, and manufacturer's data. The location of the equipment has been verified by plant walk down or by plant records, to ensure the appropriateness of the required response spectra (RRS).

The C1E list in the MEL includes the Qualification Information and Documentation (QID) file number.

The QID file contains the following information:

a. The name of the company or organization which prepared the qualification report,

b. The report identification number and date,

c. The complete report (if the reports were proprietary and not released to Energy Northwest, audits were conducted, and summary reports prepared from the audit),

d. Required input loads or applicable required and test response spectra for the equipment,

e. Normal and accident operational requirements of the equipment,

f. The identification of whether the equipment is subject to fatigue due to hydrodynamic loading, and

g. The building location for each piece of equipment.

3.10.1.2 Criteria for Acceptability

The original equipment seismic qualification requirement for CGS was described in the Preliminary Safety Analysis Report (PSAR). These requirements specified that the nuclear steam supply system (NSSS) and balance-of-plant (BOP) equipment be designed and tested to good industry practices. IEEE 344-1971 represented the established industry practices at that time and equipment purchases were made to those requirements.

In March 1979 Energy Northwest was notified that the NRC would review CGS equipment seismic qualification to upgraded criteria. This criteria was defined as IEEE 344-1975 as supplemented by Regulatory Guides 1.100 and 1.92 and NUREG-0800, Standard Review Plan (SRP) Sections 3.9.2 and 3.10. A complete review (reevaluation) of the seismic/ hydrodynamic load basis, along with reevaluation of past equipment qualification documentation, was performed. Energy Northwest undertook an equipment requalification program to ensure all Class 1E equipment would perform their safety functions during the seismic/hydrodynamic loading conditions postulated to occur at CGS. This program included

a. Identification of Class 1E equipment,
b. Definition of seismic and hydrodynamic loads,
c. Collection of seismic qualification documentation to current criteria,
d. Reevaluation of the seismic qualification documentation to current criteria,
e. Identification of document deficiencies, and
f. Correction of identified deficiencies.

The NRC staff assembled a Seismic Qualification Review Team (SQRT) and conducted a site audit of the qualification program and equipment installation.

All C1E instrumentation and electrical equipment was designed to withstand the effects of the safe shutdown earthquake (SSE) described in Section 3.7.1.

The safety-related (Class 1E) instrumentation and electrical equipment were reevaluated to ensure performance of their safety function during and after operating basis earthquakes (OBEs), SSE, and/or the hydrodynamic loads which result from a loss-of-coolant accident (LOCA) or other design-basis event.

Suppression pool hydrodynamic loads were developed for the CGS plant and are discussed in the "Plant Design Assessment for SRV and LOCA Loads," Revision 3 (see Appendix 3A). The safety/relief valve (SRV) building responses are appropriately combined with OBE, SSE, intermediate break accident (IBA), and design-basis accident (DBA) building responses to provide the basis for evaluating acceptability of Class 1E electrical and safety-related mechanical equipment originally qualified to seismic only dynamic loading. Detailed reevaluation of each component of Seismic Category I equipment was performed by comparison of original qualification RRS with revised seismic plus hydrodynamic RRS to demonstrate satisfactory qualification of the equipment. When such comparisons were not sufficient, other means of evaluating the original qualification against the new dynamic load combinations are used.

Hydrodynamic loads were limited to equipment located within containment or pipe-mounted equipment located between containment and the first equivalent six-way anchor outside containment. For that equipment, the hydrodynamic response spectra was added by square-root-of-the-sum-of-the-squares (SRSS) to the response due to the SSE computed using the finite element soil-structure interaction analysis to determine adequacy. The use of SRSS methodology for combining response to dynamic loads was justified in Reference 3.10-1. In regard to the load combination SRV1 + SSE + DBA, CGS plant design adequacy assessments for Class 1E electrical equipment were performed on the generic basis established by the BWR Mark II Owner's Group for this load combination.

The equipment affected by hydrodynamic loads were identified and an evaluation documented in the QID files. A list of the equipment was included in the CGS Dynamic Qualification Report (Reference 3.10-2).

The equipment located in other buildings was reevaluated for the motion caused by the SSE. That motion is defined by the lumped-mass model analysis described in Section 3.7.2.

The reevaluation was based on IEEE 344-1975, as supplemented by Regulatory Guide 1.100 and SRP Section 3.10. There are four exceptions to the use of these criteria:

a. Interim criteria was established to reevaluate equipment mounted on piping systems whose analyses was not completed. The interim criteria was to use the peak of the applicable 0.5% damping floor response spectrum about 8 Hz as input acceleration for analysis or for sine dwell testing. The piping systems were designed, in turn, not to respond to frequencies less than 8 Hz. The as-built piping analyses were subsequently completed using the damping values specified in Regulatory Guide 1.61 or the criteria in ASME Code Case N411. The computed accelerations of the equipment were compared to the interim acceleration criteria to verify that the interim criteria was conservative;

b. Equipment which was qualified by testing using single frequency motion was reevaluated using the following criteria to establish its adequacy;

1. If the equipment was rigid [no resonant frequency below the zero period acceleration (ZPA) of the applicable response spectra] the test input acceleration must be greater than the acceleration corresponding to the ZPA of the response spectrum of the mounting point of the equipment;

2. If the equipment had only one natural frequency, the response acceleration to the test motion must be calculated at the appropriate damping ratio. To account for cross coupling, the required response acceleration was calculated by multiplying the acceleration corresponding to the equipment's natural frequency found on the applicable response spectrum by the square root of 2 (1.41). If test response acceleration exceeded the required response acceleration, the test motion was considered adequate for requalification of the equipment;

3. If the equipment had multiple resonant frequencies, it was tested at each of them. The response to each test was calculated at each resonant frequency. That is, the response to a test at one frequency was calculated at that frequency and at all other resonant frequencies. The responses were then combined using the SRSS method. The test motion was considered adequate if the SRSS of the response accelerations to every test was greater than 1.4 times the SRSS of the accelerations found at the resonant frequencies on the applicable response spectrum;

4. If the equipment had closely spaced modes, the criteria of (3), above, was used except the responses to the closely spaced modes were combined by the absolute sum rather than SRSS;

c. For equipment which was panel, rack, or duct mounted, the maximum transmissibility of the mounting system was found by a combination of testing and analysis. The ZPA of the applicable response spectrum was then multiplied by this transmissibility to find the required acceleration for the equipment. Test accelerations of the equipment were then compared with the calculated required acceleration to establish qualification of the equipment; and

d. IEEE 344-1975 references IEEE 323-1974. Section 6.3.5 of IEEE 323-1974 recommends thermal and radiation aging before vibration testing. It has not been shown that normal service condition environmental aging reduces equipment's ability to withstand a seismic event.

The Electric Power Institute (EPRI) conducted testing to confirm that aging has insignificant effects on the ability of electrical and electronic equipment to survive a seismic event. That work is documented in EPRI NP-3326 and NP-5024.

Documentation demonstrating qualification for each item is assembled in QID files. These files provide the details of the qualification method utilized in demonstrating the equipment's adequacy to function when exposed to seismic/hydrodynamic vibrational input. See Section 3.10.2 for a discussion on methods.

3.10.1.2.1 Cable Tray and Conduit Supports

Regardless of cable tray or conduit function, all supports located in Seismic Category I structures are designed to Seismic Category I requirements, with the exception of supports for field routed trays and conduits containing cabling for the communication system and all ac lighting outside of the main control room. All supports are qualified by dynamic analysis using appropriate seismic response spectra. The design considers both dead loads (loads which do not change magnitude and/or position), live loads (loads which do change magnitude and/or position), and SSE acceleration loads. Tray and conduit cable loadings (lb/ft) are accounted for in support design, based on maximum permissible raceway loading for the types of cable utilized.

Routing of trays and conduits containing cabling for the communication system and all ac lighting outside of the main control room were reviewed or inspected prior to February 1993 to ensure that failure of the support system cannot result in these trays and conduits having an impact on Class 1E equipment.

In February 1993, the installation procedure was changed to ensure future installations of conduit are aligned with engineering standards which define Seismic Category I areas of the plant. Installation requirements are accomplished by using Seismic Category II over I supports and appropriate span lengths.

3.10.1.2.2 Decision Criteria (Original Construction Permit Basis)

3.10.1.2.2.1 Structurally Simple Equipment. See Section 3.7.2.1.9.

3.10.1.2.2.2 Structurally Complex Equipment. Class 1E equipment determined to be structurally complex such that it cannot be described by a simple model may also be qualified by analysis. The equivalent SSE horizontal loads (plus hydrodynamic loads where applicable) are determined using a dynamic model analysis of the equipment represented as a multidegree of freedom system. Horizontal floor response spectra for the particular equipment location and appropriate damping coefficients are used as input to determine the horizontal equipment response. A similar procedure is used to determine the vertical equipment response.

3.10.1.2.2.3 Optional Dynamic Testing. In lieu of calculations and analyses, vibration testing of Class 1E equipment is an acceptable method of demonstrating the capability of equipment furnished to meet seismic loading requirements given by the applicable floor response spectra. Test data furnished are either data acquired by testing equipment specifically for CGS or data acquired from previously tested comparable equipment. Dynamic tests were performed in accordance with IEEE 344-1971. (See Section 3.10.1.2.3 for reevaluation to IEEE 344-1975.)

3.10.1.2.2.4 Mandatory Dynamic Testing. When potential failure of Class 1E equipment cannot be evaluated structurally (e.g., opening or closing of electrical circuits), then vibration tests are required to demonstrate seismic adequacy. No analytical procedures are considered acceptable in these instances.

3.10.1.2.2.5 Combined Test-Analysis. Where Class 1E equipment cannot be practically qualified by either analysis or testing alone (due to equipment size, complexity, etc.), a combination test and analysis is required to demonstrate seismic capability. The combination test and analysis were performed in accordance with IEEE 344-1971. (See Section 3.10.1.2.3 for reevaluation to IEEE 344-1975.)

3.10.1.2.3 Reevaluation of Original Seismic Qualification

Section 3.10.1.2.2 describes the decision criteria employed in the selection of the qualification method used in the initial equipment specification. As discussed in Section 3.10.1.2, a reevaluation of the original qualification basis and methods employed was required by the NRC. This section discusses the reevaluation decision criteria.

3.10.1.2.3.1 Reevaluation Decision Criteria. The basis and method of qualification for each equipment item was reviewed to determine its adequacy to meet IEEE 344-1975. In addition, requalification to hydrodynamic load conditions was assessed.

Original qualification of the equipment generally is in the following categories:

a. Existing documentation fully satisfied existing new loads and criteria. Requalification consists of the preparation of appropriate comparative and certification documents;

b. New dynamic loads or criteria impact the previous qualified status of a component. Requalification can be completed by providing additional analysis for that component to supplement the original testing or analysis;

c. Previous qualification method is not applicable to load criteria now prescribed. For example, a static analysis may have been performed where a dynamic analysis would now be appropriate. Requalification would require proper analysis, test or a combination thereof; and

d. Qualifying documentation consisted of certificates of conformance. In some cases certificates of conformance did not exist because of equipment relocations or modified safety class determinations. Often, qualifying documentation could be purchased from the manufacturer. If not, requalification would consist of performing proper analysis, test, or a combination thereof.

Qualification procedure methods vary with the nature and load criteria of the equipment and consist of static techniques, dynamic analysis, or test procedures. The following describes these methods.

3.10.1.2.3.2 Static Analysis. Static analysis was allowed for rigid equipment; that is, equipment whose natural frequency is above the ZPA of applicable response spectra. Rigid equipment items are analyzed by static methods which determine forces and moments resulting from center of gravity loading of a lumped mass acted on by the resultant acceleration from multidirectional earthquake motions. Conventional analysis determined stresses and/or deflections at all critical sectional areas, mounting attachment points, and anchor bolts. All stress level findings were additive to operational loads. Structural integrity was established by comparison of stress levels with prescribed codes or manufacturers' acceptance criteria. Selection of acceleration coefficients was based on response spectra at the equipment item mounting location.

Static analysis methods were particularly suited to equipment for which structural integrity is the primary criterion for qualification. Application of static analysis required adequate demonstration that the equipment could be realistically represented by the simple model and that the method produced conservative findings.

3.10.1.2.3.3 Dynamic Analysis. Dynamic analysis methods employed a mathematical model accurately representing the structural mass and stiffness distribution with sufficient degrees of freedom to determine dynamic response to cyclic loadings. These methods were employed when equipment could not be characterized as relatively simple or when interactive effects had to be included in the demonstration of adequacy. Dynamic analysis was also used to qualify equipment for which static analysis methods were too conservative.

Detailed dynamic analyses are accomplished with the use of sophisticated computer programs, such as STRUDL, ANSYS, and STARDYNE. The programs require development of a mathematical model that describes the mass and stiffness properties of the equipment. This involves preparation of model geometry, material constants, section properties, boundary conditions, and applied loads for input into the selected computer program. Standard Review

Plan Section 3.9.2 modeling guidance is applied. As with static analysis, the results are combined with all other loads acting on or within the equipment item. The use of twice the peak values of the SSE/OBE seismic response spectra to compensate for the inability to realistically model structurally complex equipment was not used in the reevaluation.

3.10.1.2.3.4 Demonstration of Operability By Analysis. Where the function of a component could be demonstrated by analysis alone, analysis was often chosen as the cost-effective method for qualifying mechanical equipment and electric motors.

Where structural failure was the only known related failure mode, the allowables and rules of Section III of the ASME Boiler and Pressure Vessel (B&PV) Code were used for pressure retaining ASME materials. For nonpressure boundary materials either the rules and allowables of the AISC Code were used or the ASME Code allowables were extended to nonpressure retaining parts. For ANSI B31.1 components, the allowables and rules of ANSI B31.1 were used. For components which must produce mechanical motion after the faulted condition, the allowables were limited to emergency values for faulted loads. Where the listed codes do not apply (e.g., electric motors), good engineering practice was used to ensure stresses were within the working stress of the material with suitable safety factors.

For some components, operability was established by ensuring parts that have relative motion do not come into contact with each other. The manufacturer's drawings were obtained for those components and the minimum clearances were determined. In order to qualify these components, a deflection analysis was performed at peak load which showed that the parts did not come into contact. Also, it was shown that stress limits were not exceeded.

The damping values used in the analyses were those specified in Regulatory Guide 1.61 unless another was justified and documented.

In the analyses performed, horizontal and vertical loads are assumed to occur simultaneously in the most unfavorable combinations. Normal operating loads are also combined with the accident loads to produce the most severe stress combination. The "no loss of function" stresses are limited to 90% of the materials minimum yield strength with an SSE added to hydrodynamic loads and the normal operating loads.

3.10.1.2.3.5 Consideration of Fatigue. A fatigue reevaluation was performed for all components for which hydrodynamic loads are significant. To be qualified by analysis the stress levels and number of cycles at that stress are calculated. Then using the methods of ASME Section NB-3222.4, a cumulative damage fraction is calculated. That damage fraction cannot equal or exceed 1.0 for the component to be considered qualified.

3.10.1.2.3.6 Testing Methods. Qualification by testing was required when complex or active equipment could not be efficiently modeled to correctly predict response. The methods employed were laboratory tests conducted to simulated service conditions and in-situ tests conducted in the installed configuration.

Dynamic tests are performed to a test response spectrum (TRS) which envelops and closely resembles RRS over the critical frequency range. Equipment was tested to simulated inservice load conditions whenever practical and are appropriately justified when not applied. Operability was verified during and/or after the testing as applicable to the equipment being evaluated. The test specimens were checked for spurious operation during testing. If there were spurious operations, it was determined that they had no detrimental effects on the safety function of the equipment. Spurious operation of relays (e.g., contact chatter) was limited to 2 msec maximum, per IEEE 501-1978 unless it had been demonstrated that the spurious action found would not affect the safety function of the component as applied in its safety system.

Multiple frequency, multiple axis testing was used to qualify most of the Class 1E electrical equipment. This testing was performed according to IEEE 344-1975. The equipment was operated before, during, or after the test as required by the system safety function. No functional or structural failure was allowed.

Single frequency input motion, such as sine beats, was allowed when (a) the characteristics of the seismic input motion indicated that the motion was dominated by one frequency, (b) the anticipated response of the equipment was adequately represented by one mode, or (c) the test input motion had sufficient intensity and duration to excite all modes to the required amplitudes, such that the testing response spectra envelop the corresponding response spectra of the individual modes.

Some equipment was previously qualified to IEEE 344-1971 using single frequency testing. The NRC required that justification be supplied for use of single frequency single axis qualification where the component could respond to multiple modes. These criteria were seldom used to qualify CGS equipment. Justification for those particular cases was made available to the NRC SQRT reviewers during an audit in January 1983 and resolved.

Several in-situ test approaches were used to complete qualification. These may be grouped into tests that verify accuracy of the analytical model, verify rigidity, justify reducing stress analysis conservatism, and demonstrate operability under simulated load conditions. This latter test, more appropriately called an in-situ static load test, simulates seismic deflections by means of an appropriately directed static force application. Operability is exhibited before, during, and after application of the deflecting load. Another type of in-situ test was used to qualify components attached to the high-pressure core spray (HPCS) system diesel generator. Large reciprocating engines produce starting and running vibrations to attached components much greater than that received due to seismic acceleration. If it was determined that the acceleration to the component under actual running operation exceeded the calculated input due to seismic effects by a factor of 3, the component was accepted as having sufficient seismic adequacy.

3.10.1.2.3.7 Combination of Testing and Analysis. Most qualification of equipment employs a combination of testing and analysis. Sections 3.10.2 and 3.10.3 provide examples of typical equipment qualifications that used this methodology.

3.10.2 METHODS AND PROCEDURES FOR QUALIFYING INSTRUMENTATION AND ELECTRICAL EQUIPMENT

3.10.2.1 Methods For Qualifying Nuclear Steam Supply System Equipment (Excluding Motors and Valve-Mounted Equipment)

a. Procedures - GE-supplied Seismic Category I equipment meets the requirements that the seismic qualification should demonstrate the capability to perform the required function during and after the SSE and other postulated events. Both analysis and testing were used, but most equipment was tested. Analysis was primarily used to determine the adequacy of mechanical strength (mounting bolts, etc.) after operating capability was established by testing;

1. Analysis - GE-supplied Safety Class 1E equipment, performing primarily a mechanical safety function (pressure boundary devices, etc.), was analyzed since the passive nature of their critical safety role usually made testing impractical. Analytical methods described in Section 3.10.1.2.3 and sanctioned by IEEE 344-1971 were utilized in such cases;

2. Testing - GE-supplied Safety Class 1E equipment, having primarily an active electrical safety function, was tested in compliance with IEEE 344-1971, and reevaluated per Section 3.10.1.2.3. Supplemental test data meeting IEEE 344-1975 was obtained when single frequency testing could not be justified; and

b. Documentation - Documentation used to seismically qualify GE-supplied Safety Class 1E equipment is in accordance with the requirements of IEEE 344-1975. The documentation is maintained in a permanent file by Energy Northwest or GE and is available for audit.

3.10.2.2 Methods For Qualifying Balance-of-Plant Equipment

Suppliers of Seismic Category I equipment such as batteries and racks, instrument racks, control consoles, electrical distribution equipment, etc., are required to demonstrate that their components or systems do not suffer loss of function during or after SSE or OBE seismic loading. Tests or analysis are performed in accordance with the criteria described in Section 3.10.1.2.3 and IEEE Standard 344-1975. The magnitude of the SSE and OBE loadings which each component experiences is determined by its location within the plant. The response spectra for the various plant locations are included in each equipment's QID file

and a comparison of the equipment's qualification and capability is made to the RRS to document its adequacy.

3.10.2.3 General Electric-Supplied Equipment Seismic Analyses and/or Testing Procedures

3.10.2.3.1 Testing Procedures for Qualifying Equipment (Excluding Motors and Valve-Mounted Equipment)

The testing procedure for qualifying electrical equipment and instrumentation (excluding motors and valve-mounted equipment) required that the devices be mounted on the vibration machine table the same way it was to be installed in the plant. The device was tested in the operating states that it would experience in performing its safety functions and these states were monitored before, during, and after the test to ensure proper function and absence of spurious reactions. In the case of a relay, both energized and deenergized states and normally open and normally closed contact configurations were tested if the relay were used in those configurations in its safety functions.

The initial seismic qualification of GE-supplied electrical equipment was based on single frequency "continuous" testing in which the applied vibration was a sinusoidal table motion at a fixed peak acceleration and a discrete frequency at any given time. Each frequency and acceleration combination was maintained for about 30 sec except when a resonance search was made (see IEEE 344-1971). The vibratory excitation was applied in three orthogonal axes individually with the axes chosen as those coincident with the most probable mounting configuration.

The first step was to search for resonances in each device. This was done since resonances cause amplification of the input vibration and are the most likely cause of malfunction or spurious operation. The resonance search was usually run at low acceleration levels (0.2g) to avoid destroying the test sample in case a severe resonance was encountered. The search was made from 0.25 Hz to 33 Hz in accordance with IEEE 344-1971 for a test period of no less than 7 minutes; if the device was large enough, the vibrations were monitored by accelerometers placed at critical locations from which resonances were determined by comparing the acceleration level with that at the table of the vibration machine. Usually, the devices were either too small for an accelerometer, had their critical parts in an inaccessible location, or had critical parts that would be adversely affected by the mounting of an accelerometer. In these cases, the resonances were detected visually (strobe light), by audible observation, or by performance.

Following the frequency scan and resonance determination, the devices were tested to determine their malfunction limit. The malfunction limit test was run at each resonant frequency as determined by the frequency scan. In this test, the acceleration level was gradually increased until either the device malfunctioned or the limit of the vibration machine was reached. If no resonances were detected (as was usually the case), the device was

considered to be rigid (all parts move in unison) and the malfunction limit was therefore independent of frequency. To achieve maximum acceleration from the vibration machine, rigid devices were malfunction tested at the upper test frequency (33 Hz,) since that allowed the maximum acceleration to be obtained from deflection-limited machines.

Under the reevaluation program described in Section 3.10.1.2.3, the adequacy of the single frequency, single axis testing was reviewed. Supplemental test data, both on full cabinet assemblies and components, were obtained that utilized multifrequency biaxial input motion in accordance with IEEE 344-1975. A complete review of the control room panels and local instrument panels was performed and qualification upgrade to IEEE 344-1975 was achieved (see Section 3.10.3.1).

3.10.2.3.2 Qualification Procedures for Motors

Seismic qualification of the emergency core cooling system (ECCS) motors is discussed in Section 3.9.2.2.2.7 in conjunction with the ECCS pump and motor assembly.

3.10.2.3.3 Qualification Procedures for Valve-Mounted Equipment

The piping analyses established the response spectra, power spectral density function or time history characteristics, and developed a horizontal and a vertical acceleration for the pipe-mounted equipment. Pipe-mounted valves are normally furnished with a natural frequency greater than or equal to 33 Hz. Amplification of the seismic/hydrodynamic motion through the valve yoke structure was considered in the valve operator qualification. Class 1E motor-operated valve actuators were qualified per IEEE 382-1972, which invokes IEEE 344-1971 for dynamic qualification.

Three methods were used to demonstrate operability of the full valve assembly: (a) testing per IEEE 344-1975 criteria of representative samples that included the valve, yoke structure, valve operator, and associated limit switches and solenoids (if air operated), (b) testing of the complete valve assembly, using the in-situ static load test method, and (c) analysis of the valve assembly where the input load was small enough such that only minor deflections of the valve assembly occur and it could be demonstrated that critical parts would not bind up under maximum postulated loads. Section 3.9.2.2.1 provides additional detail on these last two methods.

The main steam SRVs, including the electrical components mounted on the valve, were subject to a dynamic seismic test. This testing is described in Sections 3.9.2.2.2.14 and 3.9.3.2.4.2.

3.10.2.4 Balance-of-Plant Equipment Analyses and/or Testing Procedures

Descriptions of the various acceptable analyses and/or test procedures, as well as criteria for determining which procedures are applicable to the particular units of equipment or systems, are described in Section 3.10.1.2 and in the reevaluation and upgrade program described in Section 3.10.1.2.3.

Seismic qualification by analysis followed the procedures described in Section 3.10.1.2.2. Most electrical equipment was qualified by test.

Seismic qualification by testing followed the procedures described in Sections 3.10.1.2.2.3 and 3.10.1.2.2.4 as follows: the specimen is fastened to a test table in a configuration simulating inservice mounting. Generally, a low level resonant search is made, followed by the OBE and SSE tests. Input excitations such as continuous single frequency sinusoidal motions, sine beat motions, are acceptable if justification as discussed in Section 3.10.1.2.3.6 is established. Random motions are used primarily to qualify the equipment. Each horizontal axis is excited separately, then simultaneously with the vertical axis, unless otherwise justified. Where applicable, voltage and current outputs are monitored. Seismic qualification by a combination of test and analysis (where applicable) was performed under the procedures described in Section 3.10.1.2.2.5. Combined test/analysis procedures were often used for large assemblies such as panels, racks, large reciprocating equipment, and large air handling units. Under this procedure, the supporting structure may be analyzed for adequacy and amplification factors and the components tested to the amplified values. Extension of a test on a prototype unit often required additional analysis to extend its results to a family of equipment of similar designs from that manufacturer.

3.10.3 METHODS AND PROCEDURES OF ANALYSIS OR TESTING OF SUPPORTS FOR INSTRUMENTATION AND ELECTRICAL EQUIPMENT

3.10.3.1 Nuclear Steam Supply System Equipment (Other Than Motors and Valve-Mounted Equipment)

The Class 1E equipment supplied by GE is used in many systems on many different plants under widely varying seismic requirements. The seismic qualification tests were performed at all frequencies from 5 Hz to 33 Hz (the required qualification range was 0.25 Hz to 33 Hz but since test facility capability usually limited the lower frequency test to 5 Hz, a combination of test and analysis was used to ensure there were no untested lower resonances). A sample analysis is located in Appendix 3.10C.

Some GE-supplied support structures that contain Class 1E devices were qualified by analysis. A procedure of such analysis is discussed in Appendix 3.10A. Analysis was used for passive mechanical devices and was also used in combination with testing for larger assemblies containing Class 1E devices. For instance, a test might have been run to determine if there were natural frequencies in the equipment within the critical seismic frequency range (see IEEE 344-1975). If the equipment was determined to be free of natural frequencies, then it was assumed to be rigid and a static analysis was performed. A sample static analysis is discussed in Appendix 3.10B (see IEEE 344-1975). If it had natural frequencies in the critical frequency range, then calculations of transmissibility and responses to varying input accelerations were determined to see if Class 1E devices mounted in the assembly would operate without malfunctioning.

In general, the testing of Class 1E equipment was accomplished using the following procedure. Assemblies (i.e., control panels) containing devices which have had seismic malfunction limits established were tested by mounting the assembly on the table of a vibration machine in the manner it was to be mounted when in use. The vibration testing was performed by running a low level resonance search. The assemblies were tested in the three major orthogonal axes. The resonance search was run in the same manner as described for devices (see Section 3.10.2.3.1).

If resonances were present, a transmissibility between the input and the location of each Seismic Category I device was determined by measuring the accelerations throughout the structure and calculating the magnification between it and the input. Once known, the transmissibilities could be used analytically to determine the response at any Seismic Category I device location for any given input. It was assumed that the transmissibilities were linear as a function of acceleration even though they actually decrease as acceleration is increased. Therefore, the assumption is conservative.

Since control panels and racks constitute the majority of Class 1E electric assemblies supplied by GE, seismic qualification testing of these will be discussed in more detail. The four generic panel types considered include vertical boards, instrument racks, local racks, and National Electrical Manufacturers Association (NEMA) type 12 enclosures. One or more of each type was tested using the above procedures. Figures 3.10-1 through 3.10-4 illustrate the four basic panel types referenced above and show typical accelerometer locations.

For each of the control room panels and local instrument racks a transmissibility map was established by testing, analysis, or similarity with tested panel bench boards. Required acceleration levels were established for zones within the panels.

Class 1E electrical device locations were determined through design review of panel drawings and plant inspections. Required acceleration levels were then established for each device within the panel. Then this required level was compared to the level the device received during full level assembly tests or individual device tests to ensure devices received sufficient testing to demonstrate their adequacy in their installed locations.

3.10.3.2 Balance-of-Plant Supports

Battery racks, instrument racks, cabinets, panels, and cable trays were originally specified to be qualified in accordance with IEEE 344-1971. Response spectra for all locations where the equipment is to be mounted were specified to the vendor. Subsequently, all original qualification programs were reviewed and reevaluated using IEEE 344-1975.

Cable trays, raceways, and support systems were furnished and installed by the electrical contractor in accordance with specified criteria and qualification procedures. A complete set of floor response spectra was provided to the contractor who was required to perform an analysis of the raceways and supports. This included trays and conduits, horizontal shelf members, vertical support members, internal bracing members, lateral or longitudinal

supports, and all connections. The contractor determined seismic forces based on specified levels of acceleration and frequency for each building and elevation. Maximum tray and conduit loading, minimum structural properties, as well as specified maximum spacing of supports and stress limits, are specified to the vendor. Limitations are also placed on stresses in supports to steel and to concrete. The contractor was required to submit all calculations of the seismic analysis and design for review and approval to demonstrate qualification.

3.10.4 OPERATING LICENSE REVIEW

This section discusses Energy Northwest's Seismic/Hydrodynamic Equipment Qualifications Program Results. This program has established seismic/hydrodynamic vibratory service conditions and detailed documentation of the qualification of safety-related electrical equipment, all contained in the QID files. The results of the reevaluation program and the NRC's audit of the adequacy of the qualification methods and results of the reevaluation program are also discussed.

3.10.4.1 Establishment of Service Conditions

The original service condition basis, which was seismic and operational loads has been augmented with vibrational loads due to event-induced loads, including SRV discharge, small break accident (SBA), IBA, and DBA as applicable. These loads include chugging, pool swell, drag loads, annulus pressurization, etc. These hydrodynamic loads have been established and factored into the load definition for safety-related equipment.

Energy Northwest has submitted analyses justifying the combination methodology and the plant areas affected by the loads to the NRC. The load basis for dynamic qualification of electrical equipment was reviewed and accepted by the NRC. Sections 3.7 and 3.9 provide the details of the methodology used and the load results. NUREG-0892 Supplement 1 and Supplement 4 discuss the NRC acceptance of the CGS hydrodynamic loads. Service conditions which include load definition and levels, and normal and accident operating conditions, are established for each safety-related electrical equipment and are contained in QID files.

3.10.4.2 Establishment of Qualification Information and Documentation Files

The QID files provide the details of the qualification method and results for each equipment item on the safety-related electrical equipment list. These files are the centralized collection and evaluation location for the documentation that demonstrates the equipment's qualification. Each item on the safety-related equipment list references this central file and qualification information is easily retrievable.

Included in these files is a comparison of the dynamic service conditions and the qualification levels. Test reports, analyses, qualification summary checklists, and data to verify installation similarity to qualified conditions are also included in the QID files.

The QID files are generally arranged by manufacturer and model type. Special files have also been established for complex assemblies such as control panels and local instrument racks.

3.10.4.3 Seismic Qualification Review Team Results of the Operating License Review by NRC

The NRC's evaluation of Energy Northwest's program for qualification of safety-related electrical and mechanical equipment for seismic and dynamic loads consisted of (a) a determination of the acceptability of the procedures used, standards followed, and the completeness of the program in general, and (b) an audit of selected equipment items to develop the basis for the NRC's judgment on the completeness and adequacy of the implementation of the entire seismic and dynamic qualification program. The SQRT consisted of NRC staff members and personnel from the Idaho National Engineering Laboratory (INEL, EG&G). The SQRT reviewed the equipment dynamic qualification information contained in FSAR Sections 3.9.2 and 3.10 to determine the extent to which the qualification of equipment as installed meets the current licensing criteria as described in IEEE 344-1975, Regulatory Guides 1.92 and 1.100, and SRP Section 3.10. Conformance with these criteria was required to satisfy the applicable portions of General Design Criteria (GDC) 1, 2, 4, 14, and 30, as well as Appendix B to 10 CFR 50 and Appendix A to 10 CFR 100. A representative sample of safety-related electric and mechanical equipment as well as instrumentation, included in both NSSS and BOP scopes, was selected for the audit. The plant site visit consisted of field observations of the actual, final equipment configuration and its installation. This was immediately followed by a review of the corresponding test and/or analysis documents maintained in Energy Northwest's central files (QID). Observing the field installation of the equipment was required to verify and validate equipment modeling used in the qualification program.

On the basis of this audit, both generic and plant-specific concerns relating to the seismic and dynamic qualification of equipment were identified. In subsequent submittals, Energy Northwest developed acceptable approaches to address and resolve the audit generic findings.

Adverse effects (loss of unit function) on Class 1E equipment caused by seismic-induced spurious actuation of non-Class 1E instrumentation and electrical equipment were considered. The scope included both direct causes (i.e., equipment damage, automatic shutdown) and indirect causes (manual shutdown) and it was determined that Class 1E equipment would not be adversely affected. The loss of offsite power is not a factor since outside standby power sources are not affected.

All of the issues were resolved before the plant exceeded 5% of rated power. Energy Northwest also provided additional information relative to the specific findings and clarified the details of qualification for the pieces of equipment in question, including the air operators for the purge and vent valves.

3.10.4.4 Pump and Valve Operability Review Team Audit Results of the Operating License Review by NRC

To ensure that Energy Northwest provided an adequate program for qualifying safety-related pumps and valves to operate under normal and accident conditions, the NRC staff performed a two-step review. First, the NRC reviewed FSAR Section 3.9.3.2, the description of Energy Northwest's pump and valve operability assurance program, and compared it to SRP Section 3.10. Second, the Pump and Valve Operability Review Team (PVORT) conducted an onsite audit of a small representative sample of safety-related pumps and valves supporting documentation.

The onsite audit included:

a. A plant inspection to observe the as-built configuration and installation of the equipment,

b. A discussion of the system in which the pump and valve are located,

c. Examination of the normal and accident conditions under which the component must operate, and

d. A review of the qualification documentation (stress reports, test reports, etc).

The two-step review was performed to determine the extent to which the qualification of equipment, as installed, meets the current licensing criteria as described in SRP Section 3.10 and conformance with GDC 1, 2, 4, 14, and 30 and Appendix B to 10 CFR 50.

3.10.5 ESTABLISHMENT OF OPERATIONAL PHASE SEISMIC QUALIFICATION PROGRAM

The operational phase program for maintaining qualification of the equipment and the ongoing process of ensuring that qualified equipment is selected for plant design changes is described in the following.

Energy Northwest has established an operational phase seismic qualification program. This program is integrated with design changes to Columbia Generating Station to ensure compliance with the criteria as described in IEEE 344-1975, Regulatory Guide 1.100, 1.92, and SRP Section 3.10. Conformance to these criteria as clarified in Sections 1.8.2 and 1.8.3 ensures continuing adequacy to meet the applicable portions of GDC 1, 2, 4, 14, and 30, Appendix B to 10 CFR 50, and Appendix A to 10 CFR 100.

The operational phase qualification program is applicable for all design changes that add, modify, or delete safety-related equipment.

Design control procedures establish a special qualification review as part of the design change package preparation. Adequacy of the equipment selected to be added to the plant in the design change is assessed and documented to an "as designed" qualification status. Special procurement requirements are detailed for the purchase order. During and after installation, inspections are conducted by Quality Control to ensure that critical attributes of the final installation conforms to the design package. Documentation of qualification is established in the QID files.

For design changes that modify or reclassify existing plant equipment or support structures for safety-related equipment, a special review is also required similar to the above preprocurement review. Documentation of qualification is established in QID files.

For design changes that delete existing plant equipment or downgrade its safety-related status, a special review is also conducted. Modification of the QID file is considered optional under the program. Component model or part changes that do not affect the function or capability of a component are not considered design changes. Substitutions that have a potential to affect dynamic qualification are evaluated and if necessary qualification is documented in the QID files prior to approval of the substitution.

Design control procedures also require the safety-related equipment list in the MEL to be kept current with actual plant configuration as part of the operational phase program. Thus, the link with the plant equipment configuration and qualification documentation (QID files) is maintained throughout plant life.

3.10.6 REFERENCES

3.10-1 Letter from Supply System to NRC, Subject: "Applicability of the Use of the Square Root of the Sum of the Squares Method for Combining Peak Dynamic Responses to Dynamic Loads for WNP-2" (GO2-83-090).

3.10-2 J.L. Sullivan and D.A. Armstrong, "WNP-2 Dynamic Qualification Report for Safety-Related Equipment," Engineering Report, Vols. I and II, October 5, 1982 (historical).

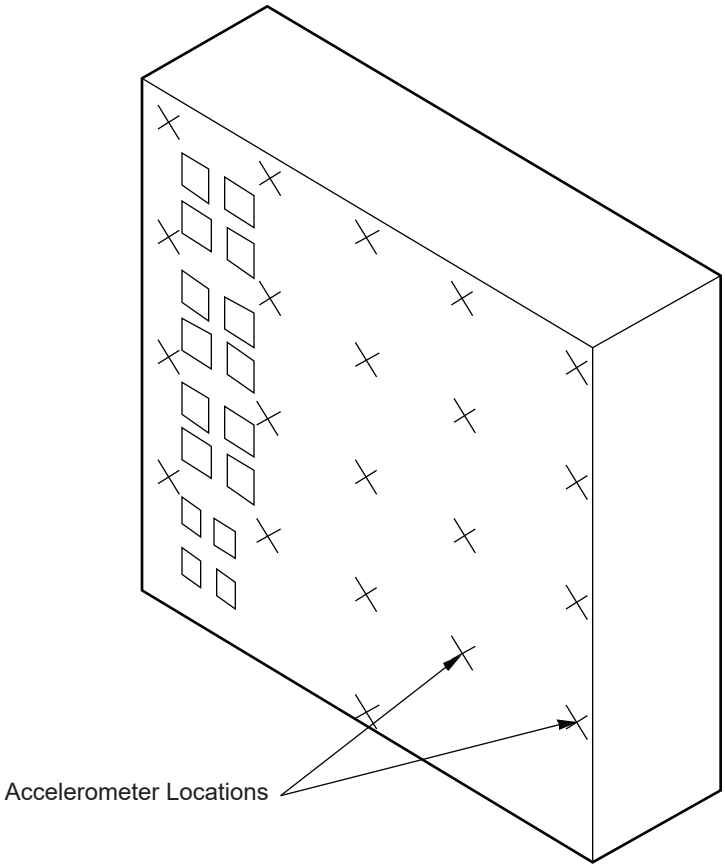

NOTE: Benchboard would be the same with a bench section protruding out approximately half-way down

Columbia Generating Station **Final Safety Analysis Report**	**Typical Vertical Board**		
	Draw. No. **990306.84**	Rev.	Figure **3.10-1**

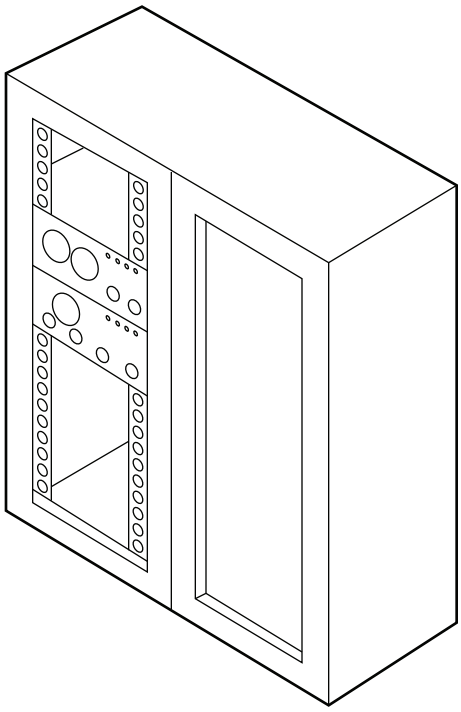

Note: Cabinet would contain gages or other special instruments instead of simply drawer type instruments.

Columbia Generating Station **Final Safety Analysis Report**	**Typical Instrument Rack**		
	Draw. No. **990306.85**	Rev.	Figure **3.10-2**

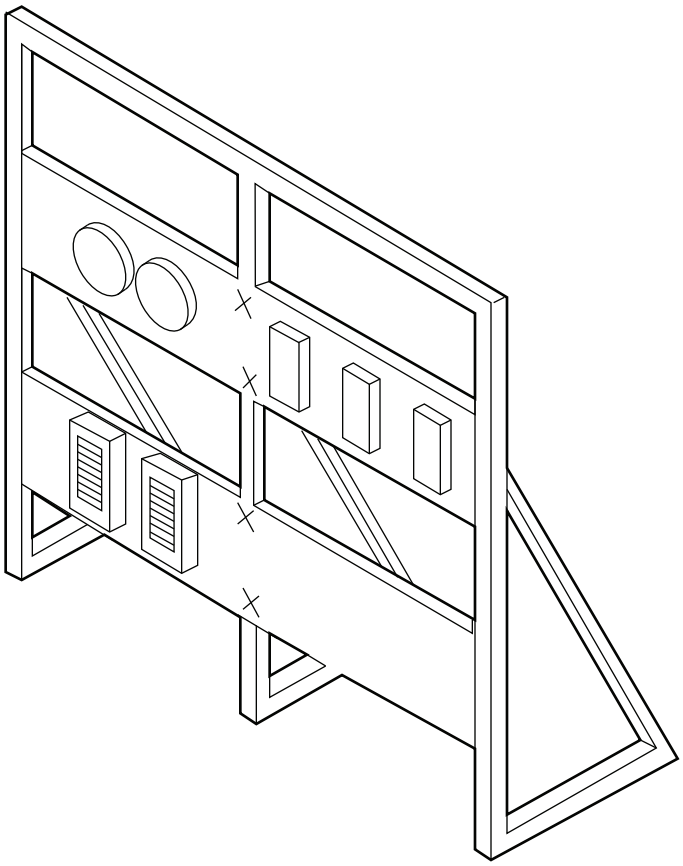

Note: Piping and other external connections not shown

Columbia Generating Station
Final Safety Analysis Report

Typical Local Rack

Draw. No. 990306.86	Rev.	Figure 3.10-3

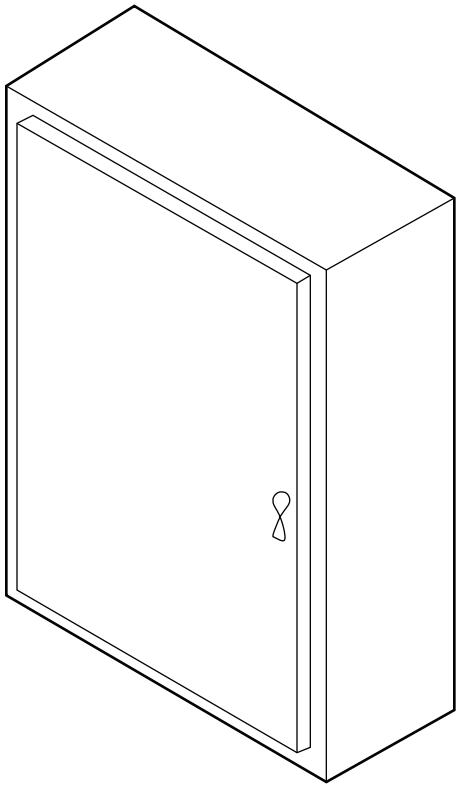

Note: Instruments mounted inside on internal membrane mounted on standoffs attached to back.

Columbia Generating Station **Final Safety Analysis Report**	**Typical NEMA Type 12 Enclosure**		
	Draw. No. 990306.87	Rev.	Figure 3.10-4

APPENDIX 3.10A

DYNAMIC ANALYSIS BY RESPONSE SPECTRUM METHOD FOR NUCLEAR STEAM SUPPLY SYSTEM EQUIPMENT

The italicized information is historical and was provided to support the application for an operating license.

Appendix 3.10A

DYNAMIC ANALYSIS BY RESPONSE SPECTRUM METHOD FOR NUCLEAR STEAM SUPPLY SYSTEM EQUIPMENT

TABLE OF CONTENTS

3.10A DYNAMIC ANALYSIS BY RESPONSE SPECTRUM METHOD FOR NUCLEAR STEAM SUPPLY SYSTEM EQUIPMENT 3.10A-2

3.10A.1 UNCOUPLING THE EQUATION OF MOTION 3.10A-2

3.10A.1.1 Method 3.10A-2

3.10A.1.2 Assumptions 3.10A-3

3.10A.2 MAXIMUM PHYSICAL DISPLACEMENT AND MAXIMUM LOAD RESPONSE 3.10A-3

3.10A.3 MAXIMUM ACCELERATIONS 3.10A-5

Appendix 3.10A

3.10A DYNAMIC ANALYSIS BY RESPONSE SPECTRUM METHOD FOR NSSS EQUIPMENT

3.10A.1 UNCOUPLING THE EQUATION OF MOTION

3.10A.1.1 Method

The system stiffness and mass matrices are generated using standard techniques. A seismic analysis is performed using the following equations of motion and procedure to uncouple these equations:

The equations of motion in matrix form are as follows:

$$M(\ddot{X} + \ddot{Y}) + C\,\dot{X} + K\,X = 0 \qquad (1)$$

where

M = mass matrix, n x n (this includes the hydrodynamic mass)

X = column vector of displacement relative to ground (n x 1)*

C = damping matrix (n x n)

K = stiffness matrix (n x n)

Y = column vector of ground accelerations (n x 1)

$\dot{}$ *= first derivative with respect to time*

$\ddot{}$ *= second derivative with respect to time*

It should be noted that for equipment containing fluid, a hydrodynamic mass coupling exists between real structural masses. This hydrodynamic mass appears as diagonal and off-diagonal terms in the mass matrix. The overall system stiffness matrix K is determined by either the matrix force method or the matrix displacement method. The resulting stiffness matrix is similar.

Removing the driving-point acceleration vector to the right side of equation (1), the equation reduces to the classical form:

$$M\,\ddot{X} + C\,\dot{X} + K\,X = -M\ddot{Y} \qquad (2)$$

In order to uncouple equation (2), we set:

$$X = \phi q \qquad (3)$$

Equation (2) then becomes

$$M\phi q + C\phi q + K\phi q = -M\ddot{Y} \qquad (4)$$

Pre-multiplying (4) by ϕ^T, the transpose of ϕ, and performing the coordinate transformation described in (4) such that f is defined by the following orthogonality conditions:

$$\phi^T M \phi = I \qquad (5)$$

$$\phi^T K \phi = \omega^2 \qquad (6)$$

where I is an identify matrix (Nxn) and ω^2 is a diagonal matrix of the eigenvalues. Then (4) becomes

$$\phi^T M \phi \ddot{q} + \phi^T C \phi \dot{q} + \phi^T K \phi q = -\phi^T \ddot{M} Y \qquad (7)$$

$$\ddot{q} + \phi^T C \phi \dot{q} = \omega^2 \quad q = -\phi^T M \ddot{Y} \qquad (8)$$

3.10A.1.2 Assumptions

The above procedure for uncoupling the equation of motion by using the modal matrix of the undamped system assumes that damping in the system is small. It will further be assumed that the damping matrix C is such that $\phi + TC\phi$ is a diagonal matrix. The elements of this diagonal-matrix are the modal damping values.

3.10A.2 MAXIMUM PHYSICAL DISPLACEMENT AND MAXIMUM LOAD RESPONSE

With the assumptions of 3.10A.1.2, equation (8) may be written in the following uncoupled form:

$$\ddot{q} \dot{+} 2\,\beta_i\,\omega_i \dot{q}_i + \omega_i^2 q_i = S_i \quad \ddot{U}_g$$

$$i = 1, 2, \text{---} n \qquad (9)$$

where

$$x_i = \begin{bmatrix} x_{1i} \\ x_{2i} \\ . \\ . \\ . \\ . \\ x_{ni} \end{bmatrix} \qquad \phi_i = \begin{bmatrix} \phi_{1i} \\ \phi_{2i} \\ . \\ . \\ . \\ . \\ \phi_{ni} \end{bmatrix}$$

The maximum physical displacement for each mass is then taken to the square root of the sums of the squares of each of the maximum displacement responses for each mode, i.e.,

$$(X)maximum = \left[\sum_{j=1}^{n} x_{ij^2} \right]^{1/2}, \quad i = 1, \quad 2, \ldots, m$$

where (X) maximum is the column vector of maximum displacements. Similarly, the maximum load response for the i+th mode is found from

$$L_{ji} = \beta_j X_i$$

$$L_{ji} = \begin{bmatrix} L_{1i} \\ L_{2i} \\ . \\ . \\ . \\ L_{mi} \end{bmatrix}$$

where

β_j *is the stress matrix for element j, j=1, … m*

m *= total number of elements.*

where

β_i *= damping ratio for the i+th mode expressed as percent of critical damping*

ω_i *= i^th natural angular frequency of the system*

S_i *= modal participation factor the ith mode =* $-\phi_i^t$ *MD*

U_g = *ground or floor acceleration time history*

ϕ_i^t = *transpose of the* i^{th} *mode shape*

D = *earthquake direction vector*

The response is calculated using the response spectra specified for the location of the input to the analytical model. The analytical procedure is described briefly in the following paragraphs.

The system of one-degree-of-freedom equations represented by equation (8) or (9) can be solved by the response spectrum method. With this method, the maximum modal response for each natural frequency of interest is found from the applicable response spectra. Response spectrum curves are essentially plots of the maximum responses of single-degrees-of freedom systems described by equation (9) with $S_i = 1.0$ *as a function of their natural frequencies.*

Having found the maximum modal displacements q, $i = 1 \ldots m$*, the maximum physical displacement for the i+th mode is given by:*

$$X_i = \phi_i S_i q_i$$

The maximum load response is taken to be the square root of the sums of the squares of each of the maximum responses for each mode, i.e.,

$$(L_j)maximum = \left[\sum_{i=1}^{n} \quad L^2{}_{ji} \right]^{1/2}, j = 1, 2, \ldots, m$$

where (L) maximum is the column vector of maximum loads.

3.10A.3 MAXIMUM ACCELERATIONS

The accelerations for each mode are determined by multiplying the displacements vector for that mode (X_i) *by the natural frequency* (ω_i^2) *of that mode.*

$$Ai = X_i \omega_i^2$$

The maximum accelerations are then determined by

$$(A)maximum = \left[\sum_{i=1}^{n} \quad A_{i^2} \right]^{1/2}$$

Appendix 3.10B

SAMPLE SEISMIC STATIC ANALYSIS FOR NUCLEAR STEAM SUPPLY SYSTEM EQUIPMENT

TABLE OF CONTENTS

3.10B.1 STATIC SEISMIC ANALYSIS OF STANDARD ENCLOSURES……3.10B-4

3.10B.2 ASSUMPTIONS AND EQUATIONS FOR THE CALCULATION OF MAXIMUM NORMAL AND SHEAR STRESSES IN ENCLOSURE MOUNTING BOLTS……3.10B-4

3.10B.3 VERIFICATION OF MOUNTING BOLT SEISMIC WITHSTAND CAPABILITY ……3.10B-8

3.10B.3.1 Purpose ……3.10B-8

3.10B.3.2 Scope ……3.10B-8

3.10B.3.3 Discussion ……3.10B-8

3.10B.3.4 Conclusion……3.10B-11

3.10B.4 REFERENCES ……3.10B-11

Appendix 3.10B

SAMPLE SEISMIC STATIC ANALYSIS FOR NUCLEAR STEAM SUPPLY SYSTEM EQUIPMENT

LIST OF TABLES

Number	*Title*	*Page*
3.10B-1	*Standard Enclosures*	*3.10B-12*

Appendix 3.10B

SAMPLE SEISMIC STATIC ANALYSIS FOR NUCLEAR STEAM SUPPLY SYSTEM EQUIPMENT

LIST OF FIGURES

Number	*Title*
3.10B-1	*Maximum Safe Weight Per Bolt For Standard Enclosure as a Function of the Height of the Center of Gravity*

Appendix 3.10B

SAMPLE SEISMIC STATIC ANALYSIS FOR NUCLEAR STEAM SUPPLY SYSTEM EQUIPMENT

3.10B.1 STATIC SEISMIC ANALYSIS OF STANDARD ENCLOSURES

Presented herein is a set of curves from which static seismic analysis of standard enclosures can be quickly performed. A standard enclosure is any enclosure listed in the Enclosure Standards Manual. The enclosures are assumed to be floor mounted, using all mounting holes with 5/8 in. steel bolts or studs each having an effective area of 0.2256 in^2. Using an elastic limit of one half the ultimate strength, the bolts are assumed to have a maximum safe tension stress and maximum safe shear stress of 28,000 psi and 21,000 psi, respectively. The curves are based on a design basis earthquake having a horizontal acceleration of 1.5g and a vertical acceleration of 0.5g. It is assumed that each enclosure is mounted alone and not coupled directly to any other enclosure.

The static analysis consists of determining the maximum allowable safe weight of the enclosure and its components for which the mounting bolt stresses are not exceeded. The curves of Figure 3.10B-1 have been derived for this purpose. To use the curves given in Figure 3.10B-1, first determine from Table 3.10B-1 the curve designation of the enclosure being considered. Next, using the corresponding curve in Figure 3.10B-1, determine the maximum safe weight per bolt for a given height of the center of gravity. The maximum safe enclosure weight is then determined by multiplying the weight per bolt by the total number of enclosure mounting bolts. Comparison with the actual weight of the enclosure and its components then indicates whether or not the mounting bolt stresses are exceeded. If the comparison shows that the maximum safe weight per bolt is exceeded, steps should be taken to increase the effective bolt area by welding the enclosure to its mounting, increasing the number of mounting bolts, adding top braces to a wall, or using another appropriate method to ensure safe operation during seismic disturbance.

3.10B.2 ASSUMPTIONS AND EQUATIONS FOR THE CALCULATION OF MAXIMUM NORMAL AND SHEAR STRESSES IN ENCLOSURE MOUNTING BOLTS

For the calculation of the maximum normal and shear stresses in the mounting bolts of any enclosure under seismic disturbance, the following necessary assumptions and conventions are made:

a. The enclosure under consideration is assumed to be a rigid body in equilibrium with respect to its mounting.

b. The forces on the enclosure due to seismic accelerations are assumed to act through the enclosure's center of gravity.

c. The enclosure is assumed to have a known weight W as well as a known center of gravity located at X, Y, Z with respect to a right-handed coordinate system.

d. The right-handed coordinate system is arbitrarily assumed to be located at the front left-hand lower corner of the enclosure with the positive X-axis to the right along the front edge, the positive Y-axis toward the back of the enclosure, and the positive Z-axis toward the top of the enclosure.

e. The stresses on the enclosure mounting bolts are assumed to be greatest when the horizontal component of the floor acceleration is perpendicular to a side of the enclosure and the vertical component of the acceleration is downward.

f. It is assumed that the enclosure tends to rotate about an axis parallel to either the X-axis or the Y-axis, dependent upon the direction of the horizontal acceleration. The location of the axis of rotation is dependent upon the mounting configuration of the enclosure.

g. There is assumed to be no friction between the enclosure and its mounting.

h. The horizontal shear force due to the horizontal component of the acceleration is assumed to be distributed equally among the mounting bolts.

i. All mounting bolts are assumed to be identical.

The following procedure outlines the equations involved in determining the mounting bolt stresses.

From the geometric configuration of the mounting bolts it is found that the tension forces in the bolts are related by

$$F_i = \frac{d_i}{d_j} F_j \qquad (1)$$

where F_i and F_j are the tension forces acting on the i-th and the j-th bolts, respectively, and d_i and d_j are the perpendicular distances of the i-th and the j-th bolts, respectively, from the axis about which the enclosure tends to rotate. When the enclosure is mounted directly to the floor, the axis of rotation will be an edge of the enclosure. For other mounting configurations, care must be exercised in determining this axis.

Summing moments about the enclosure's axis of rotation, the equation relating the unknown bolt tension forces to known quantities is found to be

$$F_1 d_1 + F_2 d_2 + \ldots + F_N d_N = W[A1 \cdot Z + (A2\text{-}1)L] \qquad (2)$$

where N is the number of mounting bolts, A1 and A2 are the relative magnitudes of the horizontal and vertical components of the floor acceleration, respectively, and L is the perpendicular distance between the line of action of the vertical acceleration through the center of gravity and the axis about which the enclosure tends to rotate.

Substituting (1) into (2), the j-th tension force is

$$F_j = \frac{d_j \cdot W\left[A1 \cdot Z + (A2 - 1)L\right]}{d_1^2 + d_2^2 + \cdots + d_N^2} \qquad (3)$$

The other tension forces are determined using Equation (1).

The tension stress T_i is related to the tension force by

$$T_i = \frac{F_i}{A} \qquad (4)$$

Where A is the effective cross-sectional area of a mounting bolt.

Summing forces in the direction of the horizontal force acting upon the enclosure and making use of assumptions 7 and 8, the shear stress on the i-th bolt is

$$S_i = \frac{W \cdot A1}{N \cdot A} \qquad (5)$$

Due to the combined tension and shear stresses, the maximum tension stress, $(T_i)_{max}$; and the maximum shear stress, $(S_i)_{max}$, present in the i-th bolt are (1):

$$(T_i)_{max} = \frac{T_i}{2} + \sqrt{\left(\frac{T_1}{2}\right)^2 + (S_i)^2} \qquad (6)$$

and

$$(S_i)_{max} = \sqrt{\left(\frac{T_i}{2}\right)^2 + (S_i)^2} \qquad (7)$$

To apply the above equations to determine the maximum tension and shear stresses, the following is required:

Total Weight *W (pounds)*

Center of Gravity	*X, Y, Z (in.)*
Horizontal Seismic Acceleration	*A1(G)*
Vertical Seismic Acceleration	*A2(G)*
Distance to CG (see eq. (2))	*L (in.)*
Number of Bolts	*N*
Area Each Bolt	*A (in.^{2})*
Bolt distance from Axis of Rotation	*d_1, d_2 . . . d_N(in.) **

The procedure to be used as follows:

a. Determine the axis about which the cabinet tends to rotate for a given floor motion.

b. Determine, using Equation (3), the tension force acting on the j-th mounting bolts (arbitrarily choose one).

c. Determine the tension forces acting on the remaining mounting bolts from application of Equation (1).

d. Calculate the tension stress acting on each bolt using Equation (4) and the results of Step 3.

e. Calculate the horizontal shear stress from Equation (5).

f. Determine the maximum tension stresses using Equation (6) and the results of Steps 4 and 5.

g. Determine the maximum shear stresses using Equation (7) and the results of Steps 4 and 5.

h. Compare these maximum stresses and allowable stresses of one half the ultimate strength (in PSI) for the bolt material.

3.10B.3 VERIFICATION OF MOUNTING BOLT SEISMIC WITHSTAND CAPABILITY

3.10B.3.1 Purpose

The purpose of the sample analysis is to document a particular static seismic analysis which was performed to verify that the mounting bolts of the standard cabinets are capable of withstanding seismic environment.

3.10B.3.2 Scope

The scope of this sample analysis is limited to the static analysis of the mounting bolt stresses of five (5) standard cabinets. The standard cabinets are:

a. Area Radiation Monitor, 236x400 (911)
b. TIP Control, 236x401 (913)
c. Start-up Neutron Monitor, 236x402 (936)
d. Power Range Monitor, 236x403 (937)
e. Rod Position Information System, 236x404 (927)

3.10B.3.3 Discussion

GE Seismic Design Guide, 225A4582, was used in conducting the static seismic analysis. Each cabinet was assumed to be floor mounted using 5/8 in. bolts in all mounting holes. The maximum safe tension stress and maximum safe shear stress were assumed to be 28,000 psi and 21,000 psi, respectively (equal to one-half the ultimate strength as given in Machinery's Handbook, Fourteenth Edition). The design basis earthquake was assumed to have a horizontal acceleration of 1.5g and a vertical acceleration of 0.5g. The weight of each cabinet was estimated using the weight of each major component listed in the parts lists for each cabinet. The height of the center of gravity of each cabinet was calculated using the weight and center of gravity of each of the major components.

The following includes the necessary information for determining the factor of safety for each cabinet:

Cabinet Name: Area Radiation Monitor 236x400

Applied Horizontal Acceleration	*1.5g*
Applied Vertical Acceleration	*0.5g*
Tension Stress (Maximum Safe)	*28,000 psi*
Shear Stress (Maximum Safe)	*21,000 psi*
Weight of Cabinet	*675 lb*

Number of Mounting Bolts	*4*
Height of Center of Gravity	*48 in.*
Maximum Allowable Weight Per Bolt (From Curve No. C1 on Page 8 of Seismic Design Guide 225A4582)	*830 lb/bolt*
*Maximum Allowable Cabinet Weight 830 lbs/bolt * 4 bolts =*	*3320 lb*

$$\text{Factor of Safety} = \frac{\text{Maximum Allowable Weight}}{\text{Weight}} = 4.9$$

Cabinet Name: TIP Control, 236x401 (913)

Applied Horizontal Acceleration	*1.5g*
Applied vertical Acceleration	*0.5g*
Tension Stress (Maximum Safe)	*28,000 psi*
Shear Stress (Maximum Safe)	*21,000 psi*
Weight of Cabinet	*755 lb*
Number of Mounting Bolts	*8*
Height of Center of Gravity	*50 in.*
Maximum Allowable Weight Per Bolt (From Curve No. C3 on Page 8 of Seismic Design Guide, 225A4582)	*1110 lb*
*Maximum Allowable Cabinet Weight 1110 lbs/bolt * 8 bolts =*	*8,880 lb*

$$\text{Factor of Safety} = \frac{\text{Maximum Allowable Weight}}{\text{Weight}} = 11.7$$

Cabinet Name: Start-Up Neutron Monitor, 236x402 (936)

Applied Horizontal Acceleration	*1.5g*

Applied Vertical Acceleration	*0.5g*
Tension Stress (Maximum Safe)	*28,000 psi*
Shear Stress (Maximum Safe)	*21,000 psi*
Weight of Cabinet	*1910 lbs.*
Number of Mounting Bolts	*12*
Height of Center of Gravity	*50 in.*
Maximum Allowable Weight Per Bolt (From Curves No. C3 on Page 8 of Seismic Design Guide, 225A4582)	*1110 lb/bolt*
*Maximum Allowable Cabinet Weight 1110 lbs/bolt * 12 bolts =*	*13,320 lb*

$$\text{Factor of Safety} = \frac{\text{Maximum Allowable Weight}}{\text{Weight}} = 11.9$$

Cabinet Name: Power Range Monitor, 236x403 (937)

Applied Horizontal Acceleration	*1.5g*
Applied Vertical Acceleration	*0.5g*
Tension Stress (Maximum Safe)	*28,000 psi*
Shear Stress (Maximum Safe)	*21,000 psi*
Weight of Cabinet	*4345 lb*
Number of Mounting Bolts	*40*
Height of Center of Gravity	*46 in.*
Maximum Allowable Weight Per Bolt (From Curve No. C3 on Page 8 of Seismic Design Guide, 225A4582)	*1210 lb/bolt*
*Maximum Allowable Cabinet Weight 1,210 lbs/bolt * 40 bolts =*	*48,400 lb*

$$\text{Factor of Safety} = \frac{\text{Maximum Allowable Weight}}{\text{Weight}} = 11.1$$

Cabinet Name: Rod Position Information System, 236x404 (927)

Applied Horizontal Acceleration	*1.5g*
Applied Vertical Acceleration	*0.5g*
Tension Stress (Maximum Safe)	*28,000 psi*
Shear Stress (Maximum Safe)	*21,000 psi*
Weight of Cabinet	*2500 lb*
Number of Mounting Bolts	*20*
Height of Center of Gravity	*45 in.*
Maximum Allowable Weight Per Bolt (From Curve No. C3 on Page 8 of Seismic Design Guide, 225A4582)	*1225 lb/bolt*
*Maximum Allowable Cabinet Weight 1225 lb/bolt * 20 bolts =*	*24,500 lb*

$$\text{Factor of Safety} = \frac{\text{Maximum Allowable Weight}}{\text{Weight}} = 9.8$$

3.10B.3.4 Conclusion

Review of the Factor of Safety of each standard cabinet indicates that the mounting bolts of each cabinet are capable of withstanding seismic disturbance as specified in the GE Seismic Design Guide.

3.10B.4 REFERENCES

3.10B.4-1 Singer, Ferdinand L., Strength of Materials, Chapter 9, Section 6.

Table 3.10B-1

Standard Enclosures

Curve	*Enclosure*	*Width*	*Mode of Depth*	*Failure*
C1	*Instrument Rack*	*24 in.*	*24 in.*	*S-S*
C1	*Instrument Rack*	*24 in.*	*30 in.*	*S-S*
C1	*Vertical Board*	*24 in.*	*24 in.*	*S-S*
C1	*Vertical Board*	*24 in.*	*30 in.*	*S-S*
C1	*Benchboard*	*24 in.*	*48 in.*	*S-S*
C1	*Benchboard*	*24 in.*	*54 in.*	*S-S*
C2	*Instrument Rack*	*30 in.*	*30 in.*	*F-B or B-F*
C2	*Instrument Rack*	*30 in.*	*24 in.*	*F-B or B-F*
C2	*Instrument Rack*	*48 in.*	*24 in.*	*F-B or B-F*
C2	*Instrument Rack*	*60 in.*	*24 in.*	*F-B or B-F*
C2	*Instrument Rack*	*72 in.*	*24 in.*	*F-B or B-F*
C2	*Instrument Rack*	*96 in.*	*24 in.*	*F-B or B-F*
C2	*Vertical Board*	*36 in.*	*24 in.*	*F-B or B-F*
C2	*Vertical Board*	*48 in.*	*24 in.*	*F-B or B-F*
C2	*Vertical Board*	*60 in.*	*24 in.*	*F-B or B-F*
C2	*Vertical Board*	*72 in.*	*24 in.*	*F-B or B-F*
C2	*Vertical Board*	*96 in.*	*24 in.*	*F-B or B-F*
C3	*Instrument Rack*	*48 in.*	*30 in.*	*F-B or B-F*
C3	*Instrument Rack*	*60 in.*	*30 in.*	*F-B or B-F*
C3	*Instrument Rack*	*72 in.*	*30 in.*	*F-B or B-F*
C3	*Instrument Rack*	*96 in.*	*30 in.*	*F-B or B-F*
C3	*Vertical Board*	*36 in.*	*30 in.*	*F-B or B-F*
C3	*Vertical Board*	*48 in.*	*30 in.*	*F-B or B-F*
C3	*Vertical Board*	*60 in.*	*30 in.*	*F-B or B-F*
C3	*Vertical Board*	*72 in.*	*30 in.*	*F-B or B-F*
C3	*Vertical Board*	*96 in.*	*30 in.*	*F-B or B-F*
C4	*Console*	*96 in.*	*42 in.*	*B-F*
C5	*Benchboard*	*48 in.*	*54 in.*	*S-S*
C5	*Benchboard*	*48 in.*	*48 in.*	*S-S*
C6	*Benchboard*	*72 in.*	*48 in.*	*F-B*
C6	*Benchboard*	*96 in.*	*48 in.*	*F-B*
C6	*Console*	*96 in.*	*48 in.*	*F-B*
C7	*Benchboard*	*72 in.*	*54 in.*	*B-F*
C7	*Benchboard*	*96 in.*	*54 in.*	*B-F*

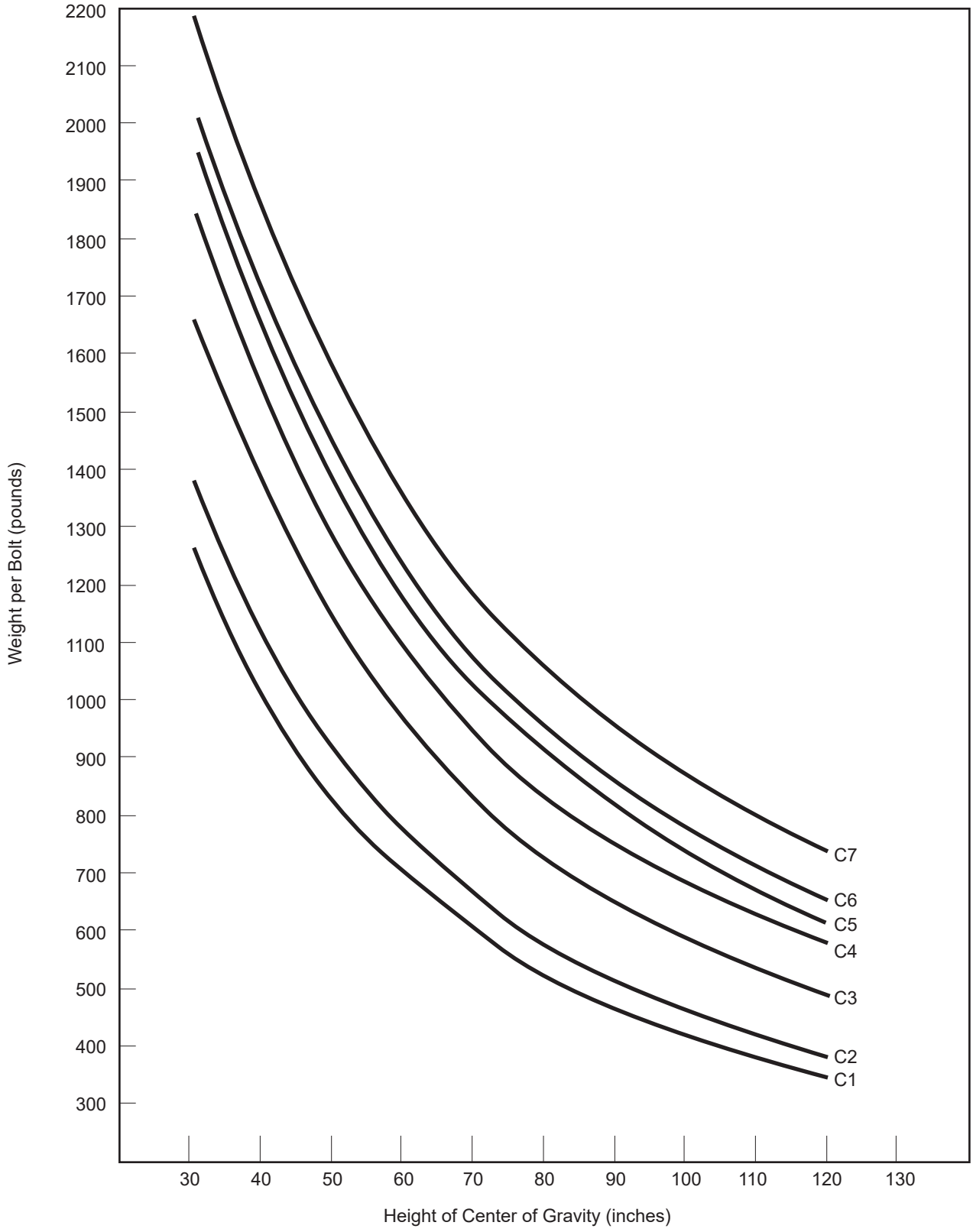

Columbia Generating Station Final Safety Analysis Report	Maximum Safe Weight Per Bolt for Standard Enclosure as a Function of the Height of the Center of Gravity		
	Draw. No. 990306.88	Rev.	Figure 3.10B-1

Appendix 3.10C

SAMPLE PANEL FREQUENCY ANALYSIS FOR NUCLEAR STEAM SUPPLY SYSTEM EQUIPMENT

TABLE OF CONTENTS

3.10C.1 METHOD OF ANALYSIS 3.10C-3

3.10C.2 FIRST APPROXIMATION 3.10C-3

3.10C.3 SECOND APPROXIMATION 3.10C-4

3.10C.4 DEFLECTION 3.10C-4

3.10C.5 ASSESSMENT OF CONSERVATIVENESS..... 3.10C-4

Appendix 3.10C

SAMPLE PANEL FREQUENCY ANALYSIS FOR NUCLEAR STEAM SUPPLY SYSTEM EQUIPMENT

LIST OF FIGURES

Number	*Title*
3.10C-1	*Corner Post*
3.10C-2	*Plan View of Panel*
3.10C-3	*Barrier With Two End Plates*
3.10C-4	*Panel Deflections*
3.10C-5	*Top Frame Deflection*

Appendix 3.10C

SAMPLE PANEL FREQUENCY ANALYSIS FOR NUCLEAR STEAM SUPPLY SYSTEM EQUIPMENT

3.10C.1 METHOD OF ANALYSIS

The method of analysis used to determine the resonant frequency of the panel is as follows:

a. *Calculate the moment of inertia of the corner post structure.*

b. *First assume a simplified structure and calculate the frequency using the expression:*

$$f = 1 / 2\pi\sqrt{Kg / w} = \left(\sqrt{g / 2\pi}\right)\left(\sqrt{k / w}\right) = 3.13/\sqrt{w / k}$$

$$f = 3.13/\sqrt{\sigma}$$

where

f = *frequency, Hz*

g = *386 in./sec*^{2}

k = *spring rate lbs/in.*

w = *weight lbs*

σ = *deflection* = w/k = *in.*

weight distribution is assumed to be uniform.

c. *Additional structural components are added and the moment and frequency recalculated.*

The calculated resonant frequency of 7.4 Hz for the panel and 5.9 Hz for the benchboard was obtained using only the corner posts and the top. The addition of skin (3/8-in. steel) and 2-in. x 1/4-in. steel stiffeners will raise the frequency further. This proves that resonances cannot exist in the unstable region below 5 Hz.

3.10C.2 FIRST APPROXIMATION

For first approximation lump the four corner posts together and assume the panel is a cantilever beam fixed on one end and uniformly loaded (see Figure 3.10C-1).

The natural frequency is 2.6 Hz resulting in the use of more of the structure.

3.10C.3 SECOND APPROXIMATION

For a second approximation, consider two 0.18-in. x 30-in. barriers in addition to the corner posts. The plan view of the panel is shown in Figure 3.10C-2.

In the X direction just one barrier will raise the frequency to 30 Hz. Use 4 in. of the back panel for each of the two barriers (see Figure 3.10C-3) and the natural frequency in the Y direction becomes 4 Hz.

3.10C.4 DEFLECTION

The deflection equation used so far is very conservative. It assumes that the four corner posts are lumped together and that the structure can reflect like a simple cantilever beam. Actually the corners are separated by an angle frame which is stiffer than the corner posts. This will force the structure to deflect as shown in Figure 3.10C-4.

The stiff top frame will also deflect slightly as shown in Figure 3.10C-5. The calculated frequency using this conservative panel frequency analysis method is 7.4 Hz which is above the necessary 5 Hz.

For benchboard H13-P601 which weighs 4,000 lbs, the calculated natural frequency is 5.9 Hz which is still above the 5 Hz test frequency minimum.

NOTE: This neglects the barriers, the end and front panels, top plate, the stiffening of the lower part of the structure due to the bench board geometry, and all other members of the structure.

3.10C.5 ASSESSMENT OF CONSERVATIVENESS

In order to assess the conservativeness of the above method for determining benchboard and panels natural frequency, analysis using a finite element model of Benchboard H13-P601 was performed by the response spectra analysis method described in Appendix 3.10A. This was performed because of the addition of some heavy components to the benchboard in the field. Due to its increased weight, the original 5-9 Hz natural frequency needed to be evaluated as increased weight results in lowering of the natural frequency. The results of the subsequent analysis yielded a natural frequency of 12.9 Hz for the benchboard. This result conclusively verified the conservativeness the above approach.

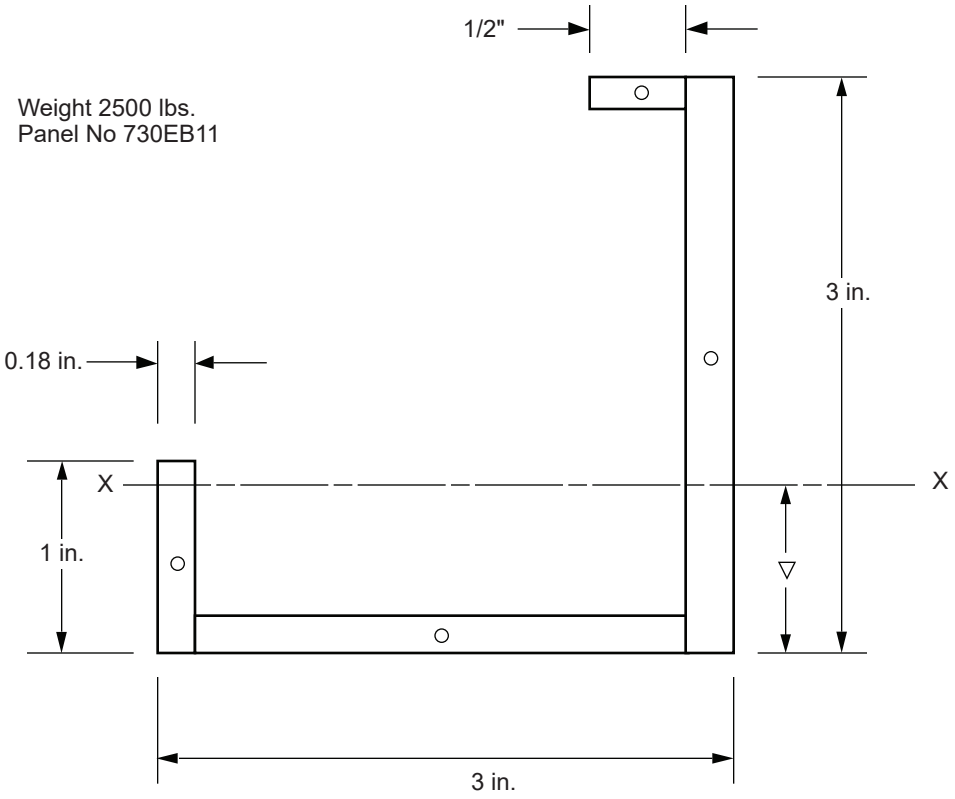

Columbia Generating Station
Final Safety Analysis Report

Corner Post

Draw. No.	Rev.	Figure
990306.89		3.10C-1

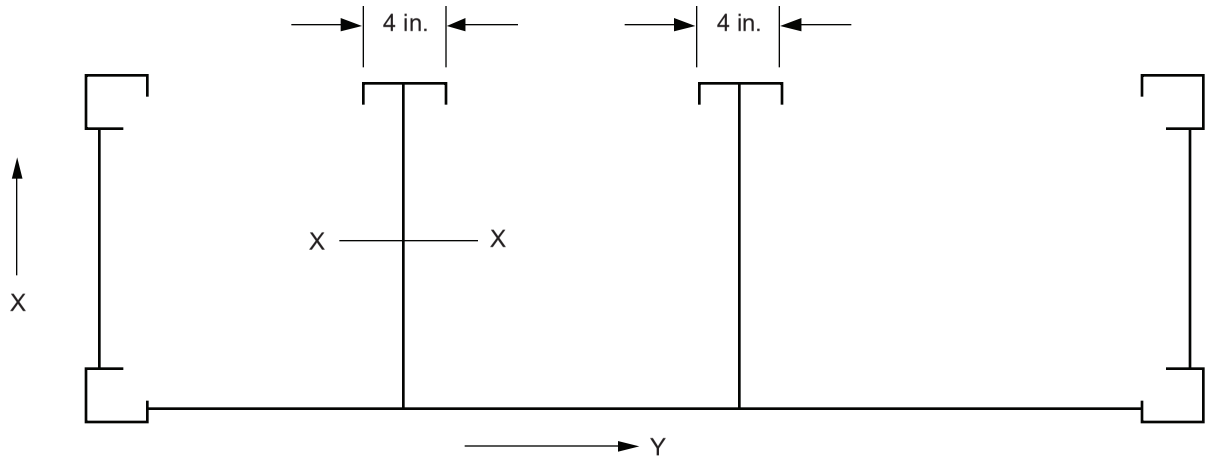

Plan View of Panel

Columbia Generating Station
Final Safety Analysis Report

Draw. No. 990306.90	Rev.	Figure 3.10C-2

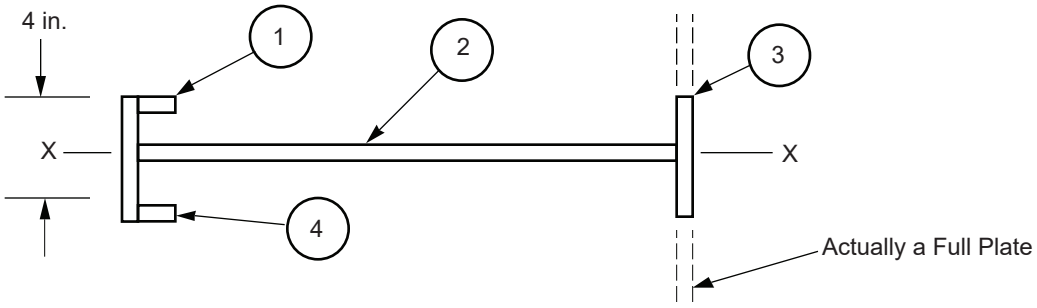

Columbia Generating Station Final Safety Analysis Report	Barrier with Two End Plates		
	Draw. No. 990306.91	Rev.	Figure 3.10C-3

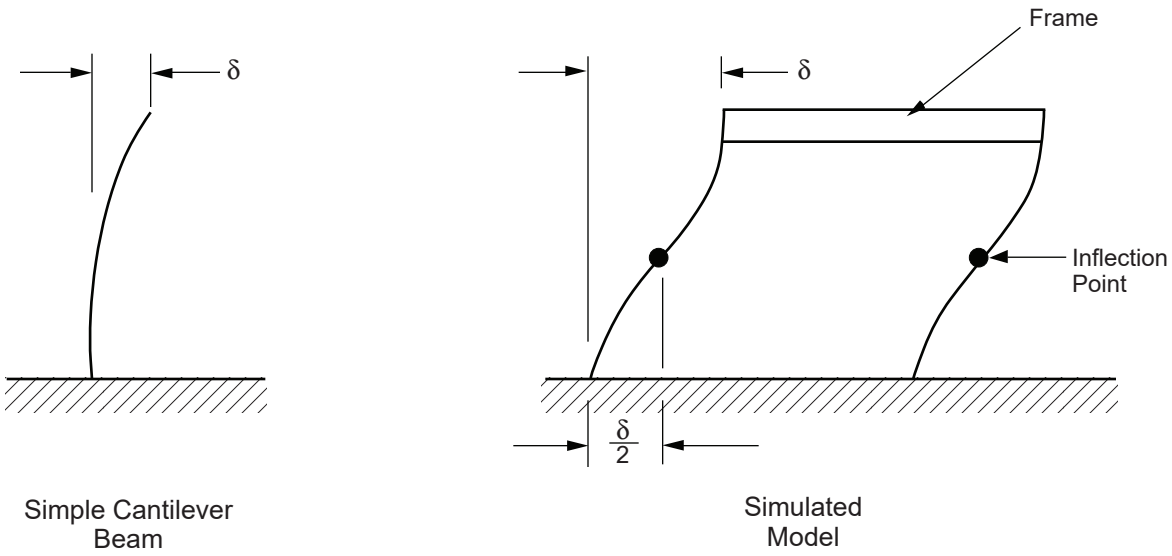

Simple Cantilever Beam

Simulated Model

Columbia Generating Station **Final Safety Analysis Report**	**Panel Deflections**		
	Draw. No. 990306.92	Rev.	Figure 3.10C-4

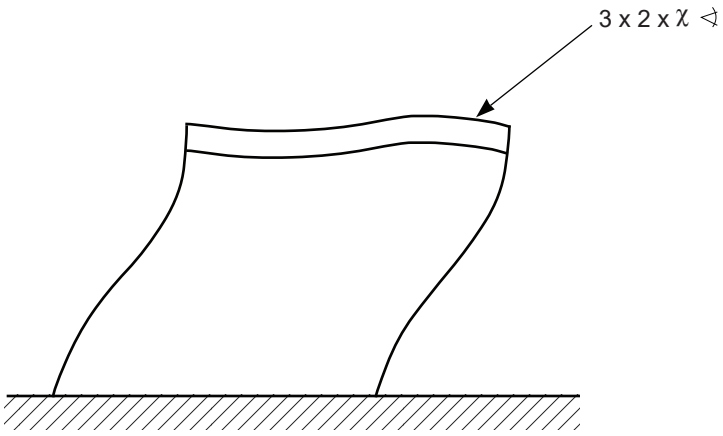

Columbia Generating Station
Final Safety Analysis Report

Top Frame Deflection

Draw. No. 990306.93	Rev.	Figure 3.10C-5

3.11 ENVIRONMENTAL DESIGN OF MECHANICAL AND ELECTRICAL EQUIPMENT

This section provides information on the environmental conditions and design bases for which the instrumentation and electrical portions of the engineered safety features (ESF) and reactor protection systems (RPS) have been designed and qualification documentation generated to ensure acceptable performance in all environments in which the equipment is or to which it may be potentially exposed.

The design bases for equipment qualification for CGS safety-related equipment is IEEE 323, 1971. This standard was selected as the design basis for qualification requirements contained in specifications and equipment purchase orders. Equipment suppliers were required to provide certification that supplied equipment meets the requirements of IEEE 323, 1971, for equipment intended for installation in potentially harsh environment areas of CGS.

Subsequent to NRC acceptance of this design basis at the construction permit stage, the NRC required evaluation of the equipment's environmental qualification to NUREG-0588 Category II. The NRC also required that equipment whose qualification documentation does not meet the requirements set forth in NUREG-0588 Category II be re-qualified or justification provided as to why the existing documentation is sufficient.

Subsequent to the issuance of NUREG-0588 the NRC amended 10 CFR Part 50.49. This expanded the scope of equipment to be considered for electrical equipment qualification and required that replacement of electrical equipment be qualified to the provisions of 10 CFR Part 50.49 unless sound reasons to the contrary are provided. The CFR also instituted a requirement to provide an analysis as to why the plant can be operated safely, pending completion of any requalification or equipment replacement action that could not be accomplished prior to operation of CGS.

The CGS Equipment Qualification Program includes two major subprograms. They are the CGS Dynamic Qualification Program and the CGS Environmental Qualification Program. The CGS Environmental Qualification Program, discussed within this section, is designed to ensure that electrical equipment important to safety is qualified to the provisions of NUREG-0588 Category II and applicable provisions of 10 CFR Part 50.49. Details of the initial CGS environmental qualification program are provided in Reference 3.11-1. The following summarizes the current CGS environmental qualification program.

3.11.1 EQUIPMENT IDENTIFICATION AND ENVIRONMENTAL CONDITIONS

3.11.1.1 Identification of Electrical Equipment Important to Safety

The criteria for identification of electrical equipment important to safety are defined in Section 3.11.1.1.1 through 3.11.1.1.4. The electrical equipment defined in these sections is included in the Master Equipment List (MEL).

Electrical equipment in these sections may experience the conditions of design basis accidents due to their plant location. In addition, the cumulative gamma radiation dose to equipment in these areas is, in general, above 1 x 10^4 rad. This equipment is located in the primary and secondary containment areas of the CGS reactor building as well as certain areas in the radwaste building.

Safety-related equipment outside of these areas and in some reactor building electrical equipment rooms is not exposed to a significant change from the normal service environment or anticipated operating occurrences as a result of design basis accidents and therefore are not a part of the environmental qualification program. In addition, the cumulative gamma radiation dose to equipment in these areas is generally below 1 x 10^4 rad. Also excluded from the environmental qualification program is safety-related electrical equipment that will experience environmental conditions of design basis accidents through which it need not function for mitigation of such accidents; or that has performed its safety function prior to the exposure to an accident environment; and whose failure (in any mode) is deemed not detrimental to plant safety or accident mitigation and will not mislead the operator. This equipment has been identified and included in the CGS dynamic qualification program described in Section 3.10.

Electrical equipment important to safety that only performs a mechanical safety function, such as the maintenance of mechanical pressure integrity, and whose electrical failure (in any mode) or change of state is of no safety significance, is considered to be similar to mechanical devices and is not addressed by the CGS environmental qualification program.

The following equipment specific data was determined for electrical equipment important to safety and is included in either the MEL or Enterprise Asset Management (EAM) system databases:

a. Equipment piece number (i.e., unique plant tag number),

b. Manufacturer,

c. Model number or manufacturer's identification reference,

d. Active or passive classification,

e. Equipment use classification per the equipment categories defined in Appendix E of Regulatory Guide 1.89, Revision 1,

f. System/component level safety function(s),

g. Equipment plant location, and

h. Equipment period of operability during accident condition.

3.11.1.1.1 Engineered Safety Features and Reactor Protection System Equipment

An ESF is a safety-related system that provides a safety function to mitigate the consequences of a design basis accident that may cause major fuel damage. An ESF includes the primary auxiliary systems of the safety system. The identification, location, and accident environmental design bases for these safety-related systems and/or components are provided in the MEL, calculations, and supporting documents. This equipment includes safety-related electrical equipment (Class 1E) that is relied on to remain functional during and following accident exposure by loss-of-coolant accidents (LOCA), main steam line break (MSLB) accidents, high-energy line break (HELB) accidents, and rod drop accidents. The electrical equipment included in the program is that equipment necessary to ensure the

a. Integrity of the reactor coolant pressure boundary,

b. Capability to shut down the reactor and maintain it in a safe shutdown condition, or

c. Capability to prevent or mitigate the consequences of the above accidents that could result in potential offsite exposures comparable to the 10 CFR Part 100 guidelines.

3.11.1.1.2 Postaccident Monitoring Electrical Equipment

In addition to Class 1E equipment identified in Section 3.11.1.1.1, electrical and instrumentation equipment identified by Regulatory Guide 1.97, Revision 2 (Category I and II), and NUREG-0737 are included in the environmental qualification program. Instruments meet the requirements by category and type as described in Regulatory Guide 1.97, Revision 2, unless noted in text discussions as meeting Regulatory Guide 1.97, Revision 3, requirements (see Section 7.5.2.2.3).

3.11.1.1.3 Other Electrical Equipment Important to Safety

Included in the environmental qualification program is equipment that is not classified as safety-related (Class 1E). This equipment may experience the environmental conditions of

design basis accidents and the results of failure of this equipment due to the design basis accidents may prevent satisfactory accomplishment of the safety function of safety-related equipment. Qualification requirements for electrical equipment required to mitigate anticipated transients without scram (ATWS) or used for remote shutdown are provided in Section 1.5.1.1.2, 7.1.2.4, and 7.4.2.3.

3.11.1.1.4 Electrical Equipment Whose Failure Does Not Affect Safety Function Performance

In the development of the list of electrical equipment important to safety, electrical equipment was identified that may be exposed to environments created by design basis accidents whose failure during or following the accident exposure would have no affect on safety function performance. Failure modes and effect evaluations were performed to justify their removal from the environmental qualification program.

3.11.1.1.5 Safety-Related Mechanical Equipment

Safety-related mechanical equipment is not included in the environmental qualification program. This includes ATWS equipment with only a mechanical augmented quality function. The design verification requirements cited in Reference 3.11-2 are met outside the environmental qualification program.

3.11.1.1.6 Identification of Safety-Related Equipment In Mild Environmental Plant Areas

Safety-related electrical equipment located in areas of the plant that are not exposed to significant environmental effects resulting from design basis accidents are considered mild environments and are also identified within the CGS equipment qualification program.

Equipment in ESF and RPS located in mild environments will not experience a significant change in its environmental conditions and, therefore, need only be qualified to the service conditions resulting from seismic design basis events. This also includes equipment that may be exposed to a total integrated radiation dose (normal plant operations including anticipated operational occurrences + accident) in excess of 1×10^4 rad if the accident radiation does not significantly exceed the 40-year integrated radiation dose due to normal plant operations and anticipated operational occurrences. Safety-related equipment located in a mild environment where the total integrated radiation dose exceeds 1×10^4 rad, or exceeds 1×10^3 rad for equipment containing certain classes or categories of solid state electronics as defined within qualification program procedures and supporting documents, have been specifically excluded from the environmental qualification program. However, this equipment is either procured to the required radiation dose provided in the procurement specifications or is evaluated for acceptable operability due to radiation exposure effects only, in its service environment. The identification of this equipment is provided in the MEL. See Section 3.10 for additional details.

The application of the Columbia AMPs verifies that the identified structures, systems, and components will continue to provide their identified intended function(s) during the period of extended operation.

3.11.1.2 Normal and Accident Environmental Service Conditions

The normal and accident environmental service conditions have been defined for electrical equipment important to safety and are identified in this section. The environmental parameters include temperature, pressure, relative humidity, demineralized water spray, submergence, and radiation.

3.11.1.2.1 Normal Plant Operational Environmental Conditions (Except Radiation)

Plant operational environmental conditions are without significant abnormalities and include the following: planned startups, power range, shutdown, and normal hot standby. These environmental conditions, specified for the various buildings and/or areas, are listed in Table 3.11-1 and represent normal temperatures and maximum and minimum design bases for temperature, relative humidity, and pressure to which equipment may be exposed during routine plant operations and short-term abnormal conditions due to anticipated operating occurrences. See Figure 3.11-1 for primary containment zone locations.

3.11.1.2.2 Accident Environmental Service Conditions (Except Radiation)

The primary containment, most areas of the secondary containment within the reactor building, and certain areas in the radwaste building, potentially could be exposed to elevated temperature, pressure, and high humidity conditions resulting from LOCA, MSLB, or HELB type accidents.

Pressure and temperature profiles were defined for two accident types: LOCA/MSLB in primary containment and HELBs in the secondary containment of the reactor building and certain areas of the radwaste building. Break locations were determined (see Section 3.6), and equipment required to operate during or following exposure to the environmental conditions resulting from the breaks identified.

The CGS plant-specific pressure/temperature profiles of the primary containment and the equipment required to operate during or following the postulated breaks are provided in the MEL, LOCA and MSLB analysis calculations, and supporting documents. Table 3.11-2 provides generic environmental conditions obtained from a GE analysis of the response of a BWR Mark II containment to a full spectrum of possible LOCA and MSLB. These generic environmental conditions were used for equipment qualification evaluations of equipment in primary containment. Plant-specific profiles are used for the postaccident period as required by NUREG-0588. In addition to pressure/temperature and humidity conditions inside primary containment, demineralized spray and potential flooding was included in the definition of the environmental service conditions.

Plant-specific pressure/temperature and humidity profiles were also defined for equipment spaces within the secondary containment areas of the reactor building and certain areas of the radwaste building. General Electric generic conditions were not used. These profiles are provided in ELB analysis calculations and supporting documents. In addition to pressure/temperature and humidity, the affect of flooding was evaluated. The results of the flooding analysis determined that CGS can be safely shut down with alternative safety-related equipment not affected by flooding. Based on this, flooding is not a required environmental service condition for equipment qualification in the secondary containment except for the high-pressure core spray (HPCS), low-pressure core spray (LPCS), reactor core isolation cooling (RCIC), and residual heat removal (RHR) reactor building pump rooms.

3.11.1.2.3 Radiation Service Conditions

The primary containment radiation conditions determined for environmental qualification include the normal (40-year dose) and the accident radiation dose (180 days). The criteria for determining the radiation dose were NUREG-0737 and NUREG-0588. The calculated radiation environment is based on normal service conditions, plus the most severe nonmechanistic design basis accident during or following which equipment must function. Required period of operability for the equipment was a factor used to determine equipment specific radiation dose. The accidents considered are the entire spectrum of Chapter 15 accidents that can lead to a degraded core condition. The source term assumptions for postulated accidents are consistent with those defined in NUREG-0588 and Regulatory Guides 1.3 and 1.7.

The secondary containment radiation conditions are defined according to Section II.B.2 of NUREG-0737 and NUREG-0588. The total integrated dose includes the sum of direct accident gamma dose, airborne gamma dose, 40-year normal gamma dose, and where equipment could be beta sensitive, a beta dose. This beta dose was determined through use of energy dependent geometry factors, a ratio of the internal equipment volume to an infinite cloud, and the dose to a target at the center point face for a hemispherical cloud of gases.

The dose and dose rate were determined for equipment areas within the secondary containment. The secondary containment was divided into radiation zones to define the equipment radiation service conditions. The worst target (component with the highest dose) in each zone was chosen. This radiation value was then used as a screening value for all equipment in the zone. In some zones, additional targets were chosen to more realistically map the radiation conditions throughout some zones.

The methodology and results of the radiation evaluations are provided in CGS radiation dose calculations. The results of evaluations for specific equipment to radiation conditions are contained in the CGS Qualification Information Documents (QIDs). The application of the Columbia AMPs verifies that the identified structures, systems, and components will continue to provide their identified intended function(s) during the period of extended operation.

3.11.1.2.4 Accident Conditions - Harsh Environments

The primary containment, most areas of the reactor building, and certain areas of the radwaste building will be exposed to a harsh environment following a postulated LOCA/HELB.

A harsh environment is defined as:

> An area that would be exposed to a significant increase in the maximum temperature, pressure, and humidity as a direct result of design basis events and/or the total radiation dose (normal + accident) is above 1×10^4 rad, or above 1×10^3 rad for certain classes or categories of solid state electronics, with a significant increase in radiation dose during accident conditions compared to that during normal plant operations, including anticipated operational occurrences.

3.11.2 QUALIFICATION TESTS AND ANALYSES

In accordance with NUREG-0588 Category II requirements, descriptions of the qualification tests and analyses have been provided in the QIDs. These QIDs are prepared in accordance with Energy Northwest Engineering Standards. The information provided is consistent with Appendix E of NUREG-0588 and includes the methods employed to address temperature, pressure, humidity, spray, radiation, and aging.

Specific values (both required and demonstrated) are provided in equipment qualification summary sheets in the QIDs.

These summary reports indicate how the general requirements of General Design Criteria 1, 4, 23, and 50 of Appendix A to 10 CFR Part 50, and 10 CFR Part 50.49 are met. The CGS equipment qualification program meets Criterion III of Appendix B to 10 CFR Part 50 through implementation of Quality Class 1 procedures for all aspects of the evaluation, documentation, and corrective action resulting from the program.

Section 1.8 addresses how Regulatory Guides 1.30, 1.40, 1.63, 1.73, and 1.89 were applied to the CGS qualification program.

3.11.3 QUALIFICATION PROGRAM RESULTS

The results of qualification test and analysis for each piece of equipment in the CGS Environmental Qualification Program is provided in the QIDs. A typical Equipment Qualification Report Summary from a QID is shown in Figure 3.11-2.

The application of the Columbia AMPs verifies that the identified structures, systems, and components will continue to provide their identified intended function(s) during the period of extended operation.

3.11.3.1 NRC Review of the CGS Environmental Qualification Program

The NRC staff evaluation of the CGS Environmental Qualification Program included an examination of the installed electrical equipment and audits of both electrical and mechanical equipment qualification documentation. A review of Energy Northwest's submittals for completeness and acceptability of systems and components, qualification methods, and accident environments was also conducted. The criteria described in Standard Review Plan Section 3.11 (NUREG-0800) and NUREG-0588, Category II, formed the basis for the NRC's evaluation of the adequacy of the CGS program.

An audit was performed of the CGS qualification documentation and installed equipment in February 1983 and was documented by the NRC in NUREG-0892, Supplement 3.

A subsequent audit was made to assess implementation of the concerns and resolutions raised in the February 1983 audit. These files were found acceptable by the NRC as reported in Supplements 4 and 5 of NUREG-0892, Reference 3.11-2.

Mechanical equipment is no longer a part of the environmental qualification program and is addressed separately (see Section 3.11.1.1.5).

3.11.3.2 Establishment of Operational Phase Environmental Qualification Review

Energy Northwest has established an operational phase environmental qualification review. This review is integrated with design changes to CGS to ensure compliance with the criteria as described in Section 3.11.

The operational phase qualification review is required for all design changes that add, modify, or delete safety-related equipment for CGS because of plant betterment, regulatory, or license conditions requirements.

Design control procedures establish a special qualification review as part of the design change package preparation. Adequacy of the equipment selected to be added to the plant in the design change is assessed and documented to an "As Designed" qualification status. Special procurement requirements are detailed for the purchase order. During or after installation, quality control inspections are conducted to ensure final installation conforms to design documents and final qualification documentation is established in QID files. A walkdown is performed by equipment qualification personnel if needed to clarify the final installation configuration.

For design changes that modify or reclassify existing plant equipment, a special review is also required similar to the above. Final documentation is established in QID files on completion of the design change.

For design changes that delete existing plant equipment or change its status to non-safety-related, a special review is also conducted. In these instances, modification of the QID file is considered optional under the program.

Design control procedures also require the safety-related equipment list in the MEL is to be kept current with actual plant configuration. Thus, consonance of the plant equipment configuration and qualification documentation (QID files) is maintained throughout plant life.

Plant modifications to environmental control systems that alter environmental profiles to which equipment has previously been qualified are reviewed to ensure equipment is qualified to revised profiles.

The NRC Bulletins and Information Notices that affect qualification of plant equipment are reviewed and factored into the qualification review. Design changes that result from NRC Bulletin and Information Notice reviews also receive the special qualification review.

The qualification program is linked with the maintenance program to ensure that required maintenance or replacement due to qualified life considerations are performed. Refinement of the qualified life is included based on actual service conditions and actual equipment degradation evaluations through monitoring, inspection, and surveillance programs.

Replacement equipment is qualified in accordance with Regulatory Guide 1.89, Revision 1. Where necessary, engineering evaluations are performed using the criteria and guidance for establishing sound reasons to the contrary provided in Regulatory Guide 1.89, Revision 1, and Generic Letter 82-09, as applicable.

3.11.4 LOSS OF VENTILATION

3.11.4.1 Main Control Room Air Conditioning and Ventilation System

Controls and electrical equipment necessary for safe plant shutdown are located in the main control room. The control room is air conditioned and shielded against radiation to allow the operators safe and continued occupancy under optimum environmental conditions. Air conditioning equipment and associated components are designed to Seismic Category I requirements. Redundant equipment is provided and on loss of offsite power, emergency power from the onsite diesel generator sets is automatically supplied to the equipment. No single failure can result in loss of control room air conditioning. Hence, design of the system ensures that the operability of the safety-related control and electrical equipment located in the control room will not be impaired and will continue to function in an acceptable environment. Therefore, no special environmental design requirements for loss of ventilation or air conditioning need be incorporated in the design of safety-related electrical or instrumentation equipment located in the control room.

3.11.4.2 Reactor Building Emergency Cooling System

Some equipment located within the reactor building which must operate in the event of an accident could not survive direct exposure to the accident environment. This equipment is

located in enclosed electrical equipment rooms. In the event of an accident, these rooms are automatically isolated from the normal reactor building ventilation system and subsequently are maintained at the required environmental conditions by the reactor building emergency cooling system (see Section 9.4.9).

The reactor building emergency cooling system consists of independent air recirculation systems each of which is fully enclosed within the room it serves and is designed to Seismic Category I standards. The air recirculation system for a room is powered from the same emergency diesel generator bus as the equipment in the room. Since each air recirculation system is independent and serves redundant emergency equipment systems, a failure of one air recirculation system does not affect the operation of other air recirculation systems or the safe shutdown of the reactor.

3.11.4.3 Miscellaneous Ventilation Systems

Each of the following areas are serviced by at least one ESF heating, ventilating, and air conditioning (HVAC) system:

b. Critical switchgear area, radwaste building (Section 9.4.1),

c. Emergency diesel generator building (Section 9.4.7),

d. Critical electrical cable runs, between the diesel generator building and the radwaste building (Section 9.4.8), and

e. Standby service water pump houses (Section 9.4.10).

Ventilation failures in these areas are considered and evaluated in Section 9.4. During some design basis events, short periods of elevated service water temperature may affect the normal temperatures of some mild environment rooms (see Section 9.4 and Table 3.11-1). No significant thermal aging will result from the temperature excursions. Design reviews were conducted to ensure that the resulting operating conditions will not cause safety-related equipment located in these areas to fail.

3.11.5 ESTIMATED CHEMICAL AND RADIATION ENVIRONMENT

3.11.5.1 Suppression Pool, Residual Heat Removal System, and Emergency Core Cooling System Water Quality

The water in these systems is not chemically inhibited. The maximum limits for the suppression pool for normal operation have been established to be compatible with those of the primary coolant and are listed in Table 3.11-3 for comparison.

The fuel pool cooling and cleanup system has provisions for circulating the suppression pool water through demineralizers to maintain water quality limits.

During reactor shutdown cooling, the RHR system water mixes with reactor water. Therefore, to ensure reactor water quality, the shutdown cooling piping and equipment is flushed with water of the quality specified in Table 3.11-3 for maximum limit with suspended solids concentration of 5 ppm or less. During layup the RHR system will be filled with water which meets the limits specified in Table 3.11-3.

3.11.5.2 Qualification

Qualification of equipment for severe chemical exposure is considered unnecessary since no sources of detrimentally high or low pH have been identified for the postulated post-LOCA conditions. The post-LOCA water qualities would be expected to be similar to that shown in Table 3.11-3 (see Section 6.1.3). Radiation environment conditions and equipment qualifications are discussed in Section 3.11.1.2.3 and 3.11.2 respectively.

3.11.6 REFERENCES

3.11-1 WNP-2 Environmental Qualification Report for Safety-Related Equipment, dated September 1983 (historical document).

3.11-2 Safety Evaluation Report Related to the Operation of WPPSS Nuclear Project No. 2, NUREG-0892, Supplement 3 (May 1983), Supplement 4 (December 1983), and Supplement 5 (April 1984).

Table 3.11-1
Normal Operating Conditions

	Area	Pressure (as noted)	Temperature (°F)	Relative Humidity (%)
I.	Primary containment (not otherwise noted)	0.25 to 0.75 psig (nominal)[m]	135 bulk average maximum[a] 70 minimum 150 maximum	40-55 normal NA - minimum 100 maximum
	Vicinity recirculation pump motors zone 4[b]	0.25 to 0.75 psig (nominal)[m]	70 minimum[c] 135 maximum	40-55 normal NA - minimum 100 maximum
	Area beneath RPV zone 3[b]	0.25 to 0.75 psig (nominal)[m]	70/100 minimum average[d] 165 maximum	40-55 normal NA - minimum 100 maximum
	Sacrifical shield wall lower/mid annulus	0.25 to 0.75 psig (nominal)[m]	70/100 minimum average[d] 185 maximum/150 average	40-55 normal NA - minimum 100 maximum
	Suppression pool air volume zone 6[b]	0.25 to 0.75 psig (nominal)[m]	50 minimum 150 maximum 117 (operating limit)	40-55 normal NA - minimum 100 maximum
	Suppression pool water volume		50 minimum Maximum - See Technical Specification 3.6.2.1	
II.	Reactor building (not otherwise noted)	Nominal -0.6 in. water gauge, static pressure (unless otherwise noted)	70-90 normal 40/50 minimum[l] 104 maximum[h]	40 normal 20 minimum 90 maximum
	RCIC equipment area		70-90 normal 60 minimum 104 maximum equip not running 150 maximum equip running	40 normal 20 minimum 90 maximum (e)

Table 3.11-1
Normal Operating Conditions (Continued)

	Area	Pressure (as noted)	Temperature (°F)	Relative Humidity (%)
	HPCS, LPCS and RHR equipment area		70-90 normal 40 minimum 104 maximum equip not running 150 maximum equip running	40 normal 20 minimum 90 maximum (e)
II.	Reactor building (Continued)			
	Steam tunnel		130 normal[i] 40 minimum 140 maximum	40-50 normal 20 minimum 98 maximum
	RWCU piping and pump area (R406, R407, R409)		118 maximum	40-50 normal 20 minimum 98 maximum
	Pipe space south (R405)		109 maximum	40-50 normal 20 minimum 98 maximum
	Shielded pipe space south (R511)		111 maximum	40-50 normal 20 minimum 98 maximum
	New fuel storage vault		116 maximum	40-50 normal 20 minimum 98 maximum
	Refueling floor		40/64 minimum[j]	40-50 normal 20 minimum 98 maximum
III.	Turbine building	0.0 in. to -0.25 in. water gauge, static pressure	70-90 normal 40 minimum (non-elec) 50 minimum (elec) 104 maximum (elec) 120 maximum (non-elec)	40 normal 20 minimum 90 maximum

Table 3.11-1
Normal Operating Conditions (Continued)

	Area	Pressure (as noted)	Temperature (°F)	Relative Humidity (%)
	Area above main steam lines		200 maximum	40 normal 20 minimum 90 maximum
IV.	Radwaste building	0.0 in. to -0.25 in. water gauge, static pressure	70 normal[f] 40/55/60 minimum[g] 104 maximum[h]	50 normal 90 maximum 20 minimum
	Radwaste building equipment cells	0.0 in. to -0.5 water gauge, static pressure	70 normal 40 minimum 120 maximum	40 normal 20 minimum 90 maximum
V.	Control room	0.10 in. to 1.0 in. water gauge, static pressure	72-78 normal 40 minimum 85/104 maximum[k]	40-50 normal 60 maximum 10 minimum
VI.	Critical switchgear rooms	0.0 in. to -0.25 in. water gauge, static pressure	70 normal 55 minimum 104 maximum (elec)[h]	40 normal 20 minimum 90 maximum
VII.	Diesel generator building	Ambient	60-95 normal[n]	60 normal 10 minimum 90 maximum
	Emergency diesel generator engine rooms		40 minimum 120 maximum	
	HPCS diesel generator engine room		40 minimum 112 maximum	
	Emergency diesel generator electrical switchgear rooms		50 minimum 104 maximum	

Table 3.11-1
Normal Operating Conditions (Continued)

Area	Pressure (as noted)	Temperature (°F)	Relative Humidity (%)
HPCS diesel generator electrical switchgear/ battery room		60 minimum 104 maximum	
Cable Corridor		40 minimum 104 maximum	
VIII. Service water pump building	0.0 in. to +0.25 in. water gauge, static pressure	50-104 normal 40 minimum 114 maximum (elec)[h]	60 normal 10 minimum 90 maximum

[a] Average or bulk temperature. See Technical Specification 3.6.1.4.

[b] See Figure 3.11-1 for zone locations.

[c] Minimum temperature for operational and maintenance for RRC pump loop piping general bolting materials specifications.

[d] The same minimum normal average operational temperature (100°F) shall apply at the inside base of the sacrificial shield wall. Air velocity over vessel insulation and exposed vessel parts shall be approximately 6 ft/sec. 70°F average applies when not in mode 1, or mode 2 or 3 with RPV piping >275 psig and 200°F.

[e] The maximum temperature and humidity will occur simultaneously in these spaces less than 1% of the time.

[f] Normal for cable spreading room is 80°F.

[g] Minimum for critical switchgear area is 55°F (60°F in battery rooms). LCS 1.7.1 lists minimum normal for battery rooms as ≥ 74°F to support Station Black Out (SBO) commitment.

[h] During design basis events this temperature may be exceeded for a short period of time (<30 days). These room temperatures are used to support the evaluated design capability of equipment during design basis events. Analysis has confirmed that equipment with a design safety function is capable of operating at the temperature listed below.

Table 3.11-1

Normal Operating Conditions (Continued)

Room/Area	Description	Operability Temp Limit	Room/Area	Description	Operability Temp Limit
C121	RadW/React Bld Corridor	N/A	D107	DG1 Engine Room	130°F
C206	Elec Switchgr Rm 2	120°F	D108	DG1 Day Tk Room	162°F
C207	Remote Shutdown	124°F*	D110	DG2 Engine Room	130°F
C208	Elec Switchgr Rm 1	120°F*	D111	DG2 Day Tk Room	162°F
C210	Div I Battery Room	110°F	D113	DG Bld HVAC Room	126°F
C211	RPS Rm 1	120°F*	D114	Div III Battery Area in DG	122°F*
C213	RPS Rm 2	120°F*	D114	HPCS DG3 Elec Equip Room	111°F*
C215	Div II Battery Room	110°F	D115	DG1 Elec Equip Room	122°F*
C216	Battery Charger Rm 1	122°F*	D116	DG2 Elec Equip Room	122°F*
C224	Battery Charger Rm 2	122°F*	D201	HPCS DG3 Air Handling Room	122°F
C230	Cable Chase	136°F	D203	DG1 Air Handling Room	130°F
C502	Equip Access Area	140°F	D204	Deleted	
C507	HVAC Equip Room 1	120°F*	D205	DG2 Air Handling Room	130°F
C508	HVAC Equip Room 2	120°F*	R105	441' Railroad Bay	137°F
C510	Instrument Shop	140°F	R212	DC MCC Rm	129°F
D100	HPCS DG3 Engine Room	122°F	R410	MCC Rm Div 2	129°F
D101	DG1 Storage Tk/Transfer Room	142°F	R411	MCC Rm Div 1	129°F
D102	DG2 Storage Tk/Transfer Room	142°F	R611	Hydrogen Recombiner Rm Div 1	129°F*
D103	HPCS DG3 Storage Tk/Transfer Room	142°F	R612	Hydrogen Recombiner Rm Div 2	129°F*
D104	React Bld/DG Bld Corridor	137°F	N/A	SW Pump House A	122°F*
D105	HPCS Day Tk Room	162°F	N/A	SW Pump House B	122°F
			R506	Fuel Pool HX Room	128°F

*Lowest value for certain equipment in this room/area.

[i] 130°F normal with one fan always on standby.

[j] 64°F minimum when Reactor Building Crane is making full rated lift.

[k] 85°F maximum for SBO capability and control room habitability; 104°F maximum environmental qualification temperature for equipment.

[l] 50°F minimum in electrical equipment areas, 40°F minimum elsewhere.

[m] Maximum pressure is the high drywell pressure trip set point; minimum pressure is vacuum breaker open set point.

[n] Per LCS 1.7.1 for HPCS battery area minimum normal is 65°F.

Table 3.11-2

Accident Environment Conditions (Primary Containment)
for Essential Equipment

Condition	Component[a]	Temperature (°F)	Pressure (psig)	Relative Humidity	Duration[b]
1	Core spray injection check valves, LPCI-RHR injection check valves, reactor shutdown cooling suction valve, safety/relief valves,[c] vessel level indicators, structural components (e.g., loop restraints, vessel skirt, etc.)	340 320 250 200[d]	-2 to 45 -2 to 45 0 to 25 0 to 20	All steam All steam 100% 100%	3 hr 6 hr 1 day 180 days
	Control instrumentation air (including accumulators), reactor building closed cooling (RCC) valves,[e] drywell unit coolers[e]				
2	Feedwater check valves, RCIC steam line isolation valve, reactor water cleanup suction valve, reactor water sample line valve, 2 in. and smaller isolation valves, cables to intermediate range and power range monitors, reactor vessel head spray isolation valve	340[f] 320	-2 to 45 -2 to 45	All steam All steam	3 hr 6 hr
3	Main steam isolation valves, main steam drain isolation valves	340	-2 to 45	All steam	1 hr
4	Recirculation gate valves,[e] reactor protection system neutron monitoring system	340 320	-2 to 45 -2 to 45	All steam All steam	3 hr 4.5 hr
5	Feedwater check valves, RCIC steam line isolation valve, recirculation flow control valves, reactor vessel head spray isolation valve, reactor water cleanup suction, reactor water sample line valve, 2 in. and smaller isolation valves	250 200[d]	-2 to 25 -2 to 20	100% 100%	1 day 180 days

Table 3.11-2

Accident Environment Conditions (Primary Containment) for Essential Equipment (Continued)

Condition	Component[a]	Temperature (°F) Drywell Side	Temperature (°F) Wetwell Side	Pressure (psig)	Relative Humidity	Duration[b]
6	Wetwell-drywell vacuum relief valves	340	275	-2 to 45	All steam	3 hr
		320	275	-2 to 45	All steam	6 hr
		250	250	0 to 25	100%	1 day
		200[d]	200[d]	0 to 20	100%	180 days
7	Main steam isolation valves, main steam drain isolation valves, standby liquid control injection check valve	340		-2 to 45	All steam	3 hr
		320		-2 to 45	All steam	6 hr
		250		-2 to 25	100%	1 day
		200[d]		-2 to 20	100%	180 days

[a] Typical components are listed. Components listed may have required operating time different than shown here. Specific hours to operate are described in Reference 3.11-1 (historical) and currently in the Columbia Generating Station Master Equipment List or MEL. Also included are the valve operators and cabling (instrumentation and power) required for proper operation of the valves listed.

[b] Durations shown are termination times for conservative environmental conditions measured from the initiation of the postulated accident, i.e., Condition 1, the 6-hr duration, is the period from 3 hr through 6 hr, the 1-day duration is the period from 6 hr through 1 day (24 hr).

[c] The safety/relief valves are required to be operable for 2 days and to remain in whichever position the valve operator has been set to at the end of the 2 days for the remainder of the long-term transient. Safety/relief valves used for automatic depressurization must remain operable throughout the long-term transient.

[d] Represent peak starting temperature of extended long-term temperature in the containment following a postulated design basis accident.

[e] The RCC system, drywell air coolers, and the reactor recirculation system have no safety requirements during a LOCA. The specified conditions are desirable to enable a normal shutdown cooling procedure during a steam leak.

[f] The TIP system isolation valves are located outside of primary containment in the TIP room. Analysis has determined that maximum accident condition will be 130°F.

Table 3.11-2

Accident Environment Conditions (Primary Containment)
for Essential Equipment (Continued)

Basic Accident Environmental Pressures and Temperatures

The following is a compilation of basic accident environmental pressures and temperatures and a description of the time durations expected. The full spectrum of simultaneous environmental possibilities is not presented in a series of curves, but rather as a description of the boundaries within which designated equipment will be qualified for discrete times during the cycles/modes of the reactor's operation for the first 24 hr. Plant-specific temperature/ pressure profiles have been calculated to define the conservatism inherent in these generic environmental values. No margin is required when these values are met in equipment qualification test programs.

Temperatures

340°F Superheat temperature for a steam leak with the reactor vessel at 400-500 psi, containment at 45 psig.

320°F Superheat temperature during shutdown cooling line flush after reactor has been depressurized to 150 psia which corresponds to the pressure at which the shutdown cooling system is activated.

250°F Long-term temperature in the containment during the first day following a postulated design basis accident.

200°F Peak starting temperature of extended long-term temperature in the containment following a postulated design basis accident. Plant-specific calculations have been determined per NUREG-0588.

Pressures

-2 psig Assumed minimum pressure of the primary containment.

45 psig Maximum positive internal pressure of the primary containment.

25 psig Pressure up to 1 day following a postulated design basis accident.

20 psig Pressure at 1 day and longer following a postulated design basis accident.

Table 3.11-2

Accident Environment Conditions (Primary Containment)
for Essential Equipment (Continued)

Duration

1 hr Applies to valves that isolate automatically on low RPV pressure or level. This time interval represents a conservative duration during which the valves must be qualified. Required operating time is 0.17 hr.

3 hr Time duration to depressurize the reactor pressure vessel at a rate not exceeding 100°F/hr, down to 150 psia.

4.5 hr Time at which shutdown cooling system flush is complete. Normal shutdown cooling necessitates closure of recirculation line valves.

6 hr Duration of time to complete vessel depressurization to near atmospheric pressure. This time includes RPV depressurization to 150 psia not exceeding a rate of 100°F/hr, flushing of system, depressurization to near atmospheric pressure. If shutdown cooling is not available, containment sprays should be activated before 6 hr to limit temperature to less than 250°F.

Table 3.11-3

Water Quality Limits

System Water	Parameter			
	Conductivity	Chlorides as Cl	pH	Total Suspended Solids and/or Insolubles
Reactor (shutdown condition, depressurized maximum)	< 10 µS/cm at 25°C	< 0.5 ppm	5.3 to 8.6 at 25°C	< 1 ppm
Suppression pool (quality expected) (see Section 6.1.1.2)	< 5 µS/cm at 25°C	< 20 ppb	5.3 to 8.6 at 25°C	< 5 ppm
Suppression pool (maximum)	< 10 µS/cm at 25°C	< 0.5 ppm	5.3 to 8.6 at 25°C	< 5 ppm
RHR (layup condition, maximum and/or refueling)	< 3 µS/cm at 25°C	< 0.5 ppm	5.3 to 7.5 at 25°C	< 1 ppm

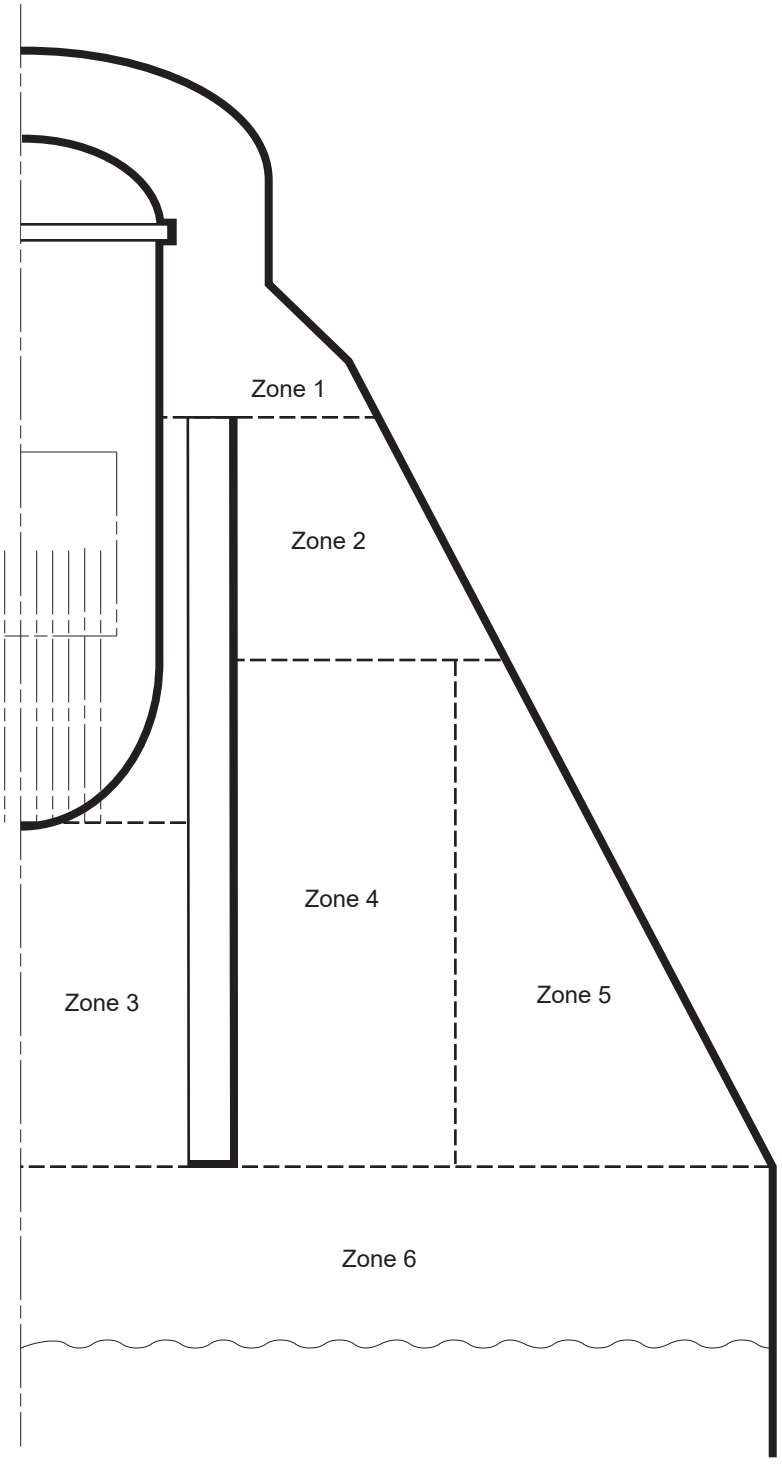

Columbia Generating Station
Final Safety Analysis Report

Primary Containment Zones

Draw. No. 990306.94	Rev.	Figure 3.11-1

ENERGY NORTHWEST

EQUIPMENT QUALIFICATION REPORT

QID #213012

Owner: Energy Northwest
Facility: Columbia Generating Station
Spec.: 2808-67

MPL:
PPD:

Page No.
Revision 4
Date: July 1983

Equipment Description	Environment			Document Ref.		Qualification Method	Outstanding Items
	Parameter	FSAR	Qualification	FSAR	Qual.		
System Reactor Building Return Air Tag Number RRA-M-(See Note 1) Manufacturer Westinghouse Model Number See Note 1 Component Motors Function/Service See Note 1 Location Bldg R Elevation Column See Note 1	Operating Time	6 months	Equivalent to > 6 months	1	4	Simultaneous Test and Engineering Analysis	None
	Temperature (°F)	90 Max Normal 104 Max Abnormal Accident Profiles 4, 8	410	2	4	Simultaneous Test and Engineering Analysis	None
	Pressure (PSIA)	14.7 Normal Accident profiles 8	Accident Profiles 8	2	4	Engineering Analysis	None
	Relative Humidity (N)	40 Normal 90 Abnormal 100 Accident	100	2	4	Sequential Test	None
	Chemical Spray	N/A	N/A	2	N/A	N/A	None
	Radiation (Rad)	3.1×10^6	1×10^6	3	4	Sequential Test	None
	Aging	40 Years	40 Years	2	4	Simultaneous Test and Engineering Analysis	None
	Accuracy	N/A	N/A	N/A	N/A	N/A	None
Flood Level Elev: Above Flood Level? Yes_X_ No____ (Ref. 5)	Prepared by:_____		Reviewed by: _____				

Documentation References

1. BRI CIE List, Rev. 8, 6/1/83
2. FSAR Paragraph 3.11
3. EDS Report 0740-004-44IJ
3. QID = 213017
5. BRI Calc. #5.51.055

Notes

Qualified

1.

Tag Number	Model	Function/Service	Elevation	Column
RRA-M-1	SBFC	Motor for RRA-FN-1	441	H.7/4.3
RRA-M-2	SBFC	Motor for RRA-FN-2	445	L.0/8.3
RRA-M-3	SBFC	Motor for RRA-FN-3	442	L.8/8.3

3.12 COMPUTER PROGRAMS FOR STRUCTURAL ANALYSIS AND DESIGN

The computer programs referenced in Sections 3.6, 3.7, 3.8, and 3.9 by their acronyms are listed below.

ADLPIPE
ANSYS
AX1
AX2
AX3
BPIPE-CS085 (Version 2)
CB&I PROGRAM 979 - ASFAST
CB&I PROGRAM 1027
CB&I PROGRAM 1037 - DUNHAM'S
CB&I PROGRAM 1335
CB&I PROGRAM 1606 AND 1657 - HAP
CB&I PROGRAM 1635
CB&I PROGRAM 711 - GENOZZ
CB&I PROGRAM 766 - TEMAPR
CB&I PROGRAM 767 - PRINCESS
CB&I PROGRAM 781 - KALNINS
CB&I PROGRAM 846
CB&I PROGRAM 928 - TGRV
CB&I PROGRAM 948 - NAPALM
CB&I PROGRAM 953
CB&I PROGRAM 962 - E0962A
CB&I PROGRAM 984
CB&I PROGRAM 992 - GASP
DACSR
FLXMAT
GOTHIC
ISOFINITE
MASS
MULTISHELL
NASTRAN
NUPIPE-IIM (Version 1.6.3)
P001 (Version 6.0)
P002 (Version 4.0)
P003 (Version 5.0)
PDA
PIPESUP-CS102 (Version 2)
RELAP3
RELAP4/MOD5
SAP4G07

S/RVDAM
SSAPO ALGOR SUPERSAP
SPLUG
STARS-2S
STRUDL II
T-MOVE (Version V0-00)
TPIPE (Version 4.2)

The italicized information is historical and was provided to support the application for an operating license.

The computer program summaries, including descriptions of assumptions, limitations, capabilities, and any appropriate parameters and features associated with the use of these computer programs, are provided in the following.

All programs are verified, within the stated assumptions and limitations, for correctness of theory used and for validity of results obtained for a variety of typical problems. Results are checked against known solutions, solutions obtained from other programs, or hand calculations. Examples of validation problems are included with the program descriptions. Wherever applicable, internal checks are included as an aid in checking the validity of the results obtained from the computer program for each problem analyzed.

3.12.1 DACSR

DACSR (Dynamic Analysis of Cantilever Structures) is a computer program used for the response spectrum analysis of structures subjected to horizontal excitations. The structural idealization consist of lumped mass cantilevers attached to a common rigid mat which is supported by soil springs. Other springs can be used to connect any two masses.

Each mass has two degrees of freedom: translational and rocking. The program has the capability to perform an analysis on a model containing up to three cantilevers. DACSR does not consider off-diagonal masses.

The program calculates the eigenvalues (natural frequencies) eigenvectors (natural mode shapes), modal participation factors, and modal damping values which are based on Whitman's average weighted damping calculation (Reference 3.12-1). The input ground motion (horizontal base excitation) is defined by a set of pseudo-accelerations response spectrum curves corresponding to different damping values which are expressed as a fraction of critical damping. The program then calculated modal accelerations, velocities, and displacements. The total response is found by the following methods:

a. Absolute sum of the individual modal responses

b. Square root of the sum of the squared modal responses

c. Combination of the above two methods, which accounts for the effect of closely spaced modes. (Closely spaced modes are defined as those whose frequencies are within 10%.)

The option of having member forces calculated is available.

Program input requires member properties and stiffness, structure stiffness, spring constants, damping ratings, and ground acceleration.

DACSR was developed by Burns and Roe, Inc., in 1970. The program can successfully operate on IBM 370 series hardware maintained by Call Data Systems, Inc., a subsidiary of Grumman Data Systems.

To demonstrate the validity of DACSR, results from a production problem were compared to those obtained from the public domain program STARDYNE. Results from the two programs are compared in Table 3.12-1.

As demonstrated in the table, results compare favorably.

This program is used for dynamic analyses discussed in 3.7.

3.12.2 AX1

AX1 (Analysis of Axisymmetric Solids) is a finite element program which determines deformations and stresses within axisymmetric structures of arbitrary shape. The effects of displacement or stress boundary conditions, concentrated loads, gravity forces and temperature changes are included. Nonlinear material properties are included by a successive approximation technique. Orthotropic material behavior is included. The program can be used for structures with up to 800 elements and 900 modes with a maximum bandwidth of 27 modes. The program has a mesh generating capability which reduces the amount of input required.

The program was written by E. L. Wilson of the University of California at Berkeley, Reference 3.12-2, and is in the public domain.

The program is referred to in Section 3.8.2.

3.12.3 AX2

AX2 (Axisymetric Shell Program) is a computer program used for the analysis of single layer, axisymmetric thin shells of revolution composed of spherical, toroidal, conical, cylindrical or

circular plate segments. Shells may be stiffened with discrete circumferential rings of arbitrary cross section. Structural geometry and loading is defined such that behavior is linear and deflections are small with respect to segment thicknesses.

Any elastic, isotropic material with constant elastic modulus, Poisson's ratio, and coefficient of thermal expansion may be modeled. Structural loading is static and axisymmetric. AX2 allows mechanical loading in the form of normal and tangential pressures and line loads and moments. Thermal loading in the form of meridional and cross thickness gradients is also available. Both rigid and elastic edge restraints may be used in global coordinates and in user-specified local coordinate systems inclined with respect to the global axes. Nodal displacements may also be specified.

Output from AX2 includes

a. Nodal displacements in global coordinates,
b. Reaction loads at constraints in global coordinates,
c. Body displacements in local coordinates,
d. Stress resultants, and
e. Stresses and ASME stress intensities.

AX2 uses the stiffness method (References 3.12-6 and 3.12-8) to determine the deflections of the nodal circles or segment junctions. The load-deflection relationships required for the assembly of the stiffness matrix are derived from closed form solutions found in References 3.12-3, 3.12-4, 3.12-7 and 3.12-9. An exception to this procedure is the toroidal segment, which required development of a separate numerical integration procedure. The remaining output quantities are calculated from the displacement solution using formulations derived from the same references.

AX2 is a program proprietary to the Pittsburgh-Des Moines Steel Company, Pittsburgh, Pennsylvania. This is verified by comparing its results with those obtained from the computer code BOSOR 4. BOSOR 4 was written by David Bushnell of the Lockheed Missile and Space Company (Palo Alto, California) and is in the public domain.

A cone segment with an apex angle of 60° and a 30° spherical segment (R/t = 500) is connected rigidly, without a discontinuity, to form a shell. (See Figure 3.12-1.) Loading consists of 20 psi internal pressure (normal) and 200°F uniform temperature rise. Normal and tangential deflections at points 1 and 3 are constrained. Normal and tangential deflections are plotted against arc length for both AX2 and BOSOR 4, as shown in Figures 3.12-2 and 3.12-3. AX2 deviation from BOSOR 4 results for these deflections are calculated and also appear on these figures.

This program is referred to in Section 3.8.2.

3.12.4 AX3

AX3 (Analysis of Thin Shell Solids of Revolution) is a computer program used for the analysis of laminated, thin shell solids of revolution with orthotropic material properties. The program is predicated on the Kirchoff-Love hypothesis regarding deformation. It accommodates asymmetrically and axisymmetrically loaded shells composed of an arbitrary number of bonded layers, each with a different thickness and different orthotropic material properties. In this method of analysis, a series of short, truncated conical shell elements connected by nodal circles is substituted for the continuous shell. An approximate displacement function similar to the following is used:

$$W_r = b_1 + b_2 r + b_3 z$$

$$W_z = b_4 = b_5 r + b_6 z$$

where:

W_r, W_z = *linear displacement functions*

$b1, \cdots b6$ = *generalized coordinates*

r,z = *radial and axial coordinates*

From the above, the displacements, moments, and stresses for loadings (such as concentrated nodal circle forces and moments) and distributed surface normal and shearing pressures are obtained directly.

The AX3 program was written by S. K. Takahashi of the Naval Civil Engineering Laboratory, Port Hueneme, California and S. B. Dong, Assistant Professor of Engineering, University of California, Los Angeles, (Reference 3.12-10), and is in the public domain.

This program is referred to in Section 3.8.2.

3.12.5 STRUDL II

STRUDL II (Structural Design Language) is a static and dynamic analysis program offering solutions to a wide range of structural problems. Primarily, the program is used to analyze two-dimensional trusses, frames, plates and grids, as well as three-dimensional trusses and frames. Problems which contain both planar and spatial components may also be analyzed.

In addition to standard truss and framing members, the program accepts directly input curved members, piping sections and member dimensions (for concrete sections). Provisions exist to

idealize members of variable cross sections, to input stiffness or flexibility arrays, or to reference predefined tables of member properties. Anisotropic materials may be also used.

The program flexibility which exists for the specification of joint and member data also applies to loadings. It can accept input from concentrated, uniform or linearly varying member loads, member distortions, temperature loadings (including transverse gradients), joint loads, and joint displacements. Program output includes member forces, displacements, reactions, member distortions and equilibrium check at every point. The program is capable of identifying infinitely stiff end joints, member eccentricities and elastic supports.

STRUDL II has the capability to develop a large variety of finite element structural models, such as may be required for certain building types and its components. Analysis of three-dimensional elastic solids subjected to arbitrary loads, temperature changes, or specified displacements can be performed. Either earthquake accelerations or time history force may be used for dynamic analysis. Analysis results can be output in terms of node displacements and element stresses and strains or member forces and moments. Eigen-values, eigenvectors and time history response or nodal responses may be obtained for dynamic analysis.

In addition to analysis, the program is capable of performing structural steel design according to the AISC-69 Code (Reference 3.12-23) and reinforced-concrete design according to the ACI 318-71 Code (Reference 3.12-24).

STRUDL-II was developed as part of the Integrated Civil Engineering System at the Massachusetts Institute of Technology. See Reference 3.12-11.

STRUDL-II has been in the public domain since 1968. The program is currently maintained by McDonnell Douglas Automation Company and is operated on a IBM 360/168 machine.

This program is referred to in Sections 3.8.3.4.5 and 3.8.4.4.1.

3.12.6 STARS-2S

The STARS-2S Shell [Theory Automated for Rotational Structures - 2 (Statics)] program was developed to solve complex mathematics and numerical techniques required to analyze structural shell problems using an accurate shell theory. The program is based on the Love-Reissner first order shell theory.

This program can analyze orthotropic thin shells of revolution, subjected to unsymmetric distributed loading or concentrated line loads, as well as thermal strains (Reference 3.12-12). Furthermore, a shell with arbitrary boundary conditions, under loads which vary arbitrarily

with position and under a temperature variation through the thickness, is tractable with this program. The shell can consist of any combination of the following geometric shapes:

a. Ellipsoidal-spherical (offset from the axis of revolution allowed),
b. Ogival-toroidal,
c. Modified ellipse shape,
d. Conical-circular plate,
e. Cylindrical,
f. General point input geometry,
g. Dummy geometry slot to be filled in by user,
h. Discrete ring, and
i. Elastic support.

The program has the capabilities to analyze a shell wall cross section that is composed of a sheet, sandwich, or reinforced sheet or sandwich. Reinforcement can consist of rings and/or stringers, a waffle construction rotated at any angle to the principal coordinates, or an isogrid construction. General stiffness input options are also available. The program is capable of accommodating reinforcement material properties that differ from the main shell, and a temperature variation that can cause different properties in the two face sheets of a sandwich wall. The present program is also capable of a nonlinear analysis of axisymmetrically loaded shells.

The approach to analysis is to cut the structure into several shell regions. The regions are further subdivided into several shell segments, each being free to have its own geometric shape. There is a restriction on the length of the shell segments. Physically, the restriction demands that boundary disturbances at one edge be distinctly felt at the other edge. One of the limiting factors is that the ratio of the radii of revolution at the initial and final points of a segment be greater than one hundredth and less than 100.

The required input data is subdivided into three main parts; namely, geometric, topological (or coupling orientation), and joint data (degree of freedom description for each joint component). Each segment requires its own geometric configuration and numerical integration control.

The output consists of stiffness coefficients with symmetry checks for each shell segment. Region stiffnesses and their symmetry checks are also provided. Final stresses, displacements and Huber-Von Mises-Hencky "effective stresses" are provided for each shell segment at specified intervals along the segment.

STARS-2S was developed by Grumman Aerospace Corp. and is in the public domain. Official documentation is "User's Manual for the STARS-2 System of Programs, No. 000-STMECH-039 Volume I," by V. Svalbonas (Reference 3.12-12).

STARS-2S is a new version of the STARS programs but has retained the basic features of these programs which have been in use since 1963. The program operates on an IBM 370 series computer maintained by Call Data Systems, Inc., a subsidiary of Grumman Data Systems.

This program is referred to in Section 3.8.4.4.1.1.

3.12.7 NASTRAN

The acronym NASTRAN is formed from NAsa STRuctural ANalysis. NASTRAN is a general purpose digital computer program for the analysis of large complex structures and has its origins in the research councils of NASA.

NASTRAN is a large digital computer program for static and dynamic structural analysis by the finite element approach. The program has been specifically designed to treat large problems with many degrees of freedom. The only limitations on problem size are those imposed by practical considerations of running time and by the ultimate capacity of auxiliary storage devices.

The program is currently capable of performing twelve rigid formats, each corresponding to a different problem type as indicated in the following list:

a. Basic static analysis,
b. Static analysis with inertial relief,
c. Normal modes analysis,
d. Static analysis with differential stiffness,
e. Buckling analysis,
f. Piecewise linear analysis,
g. Direct complex eigen value analysis,
h. Direct frequency and random response analysis,
i. Direct transient analysis,
j. Modal complex eigen value analysis,
k. Modal frequency and random response, and
l. Modal transient analysis.

NASTRAN embodies a lumped element approach, wherein the distributed physical properties of a structure are represented by a model consisting of a finite number of idealized substructures or elements that are interconnected at a finite number of grid points, to which loads are applied. All input and output data pertain to the idealized structural model.

Input for the reactor building foundation mat consists of sectional properties, loads at node points, surface (pressure) loads, and soil spring constants at node points. The program output includes displacements, moments and shears. The use of the NASTRAN program for this

particular application was checked by solving initially a small sample problem which gave satisfactory results.

NASTRAN is in the public domain and official documentation consists of the following four manuals:

a.	*NASTRAN Theoretical Manual*	*NASA-SP-221(01)*
b.	*NASTRAN User's Manual -* *NASA Level 15* *Level 15.5 Update*	 *NASA-SP-222(01)* *NASA-SP-222* *Rev. CS1*
c.	*NASTRAN Programmer's Manual*	*NASA-SP-223(01)*
d.	*NASTRAN Demonstration Problem Manual*	*NASA-SP-224*

The program is currently operational on the following computing systems:

a. CDC 6000 series under the SCOPE 3 operating system,
b. IBM System 360/370 under OS operating system, and
c. Univac 1108 under EXEC 8 operating system.

This program is referred to in Sections 3.8.4.4.1.1 and 3.8.5.4.2.

3.12.8 FLXMAT

FLXMAT (Flexible Mat on an Elastic Foundation) analyzes a beam on an elastic foundation for arbitrary load conditions. The analysis is based on the solution to the basic differential equation for a beam on an elastic foundation:

$$EI\frac{d^4y}{d\chi^4} = \rho = -ky$$

or

$$\frac{d^4y}{d\chi^4} = -4\beta y$$

in which ρ is the pressure, k is the foundation (soil) modulus, and β is defined by the equation

$$\beta = \sqrt[4]{\frac{k}{4EI}}$$

In general the bending of a beam on an elastic foundation falls into three divisions as follows:

a. For short beams: $\beta L < 0.60$,
b. For beams of medium length: $0.6 < \beta L < 5.00$, and
c. For long beams: $\beta L < 5.00$.

where L represents the length of the beam.

In analyzing this type of problem two basic assumptions are made:

a. The foundation is elastic. This implies that the settlement at any point is proportional to the pressure at that point; and

b. The foundation modulus in tension is equal to that in compression. The foundation modulus is defined as the pressure which is required to produce a unit settlement.

The program input requires sectional properties, applied loads, Young's modulus, and the soil modulus. The program output includes soil reactions, displacements, shears, and moments at specified intervals along the beam.

FLXMAT was developed by Burns and Roe, Inc., in 1972. The program can successfully operate on IBM 370/168 hardware maintained by Call Data Systems, Inc., a subsidiary of Grumman Data Systems.

To demonstrate the validity of FLXMAT, results from the program are compared with results of two sample problems presented in the text by Robert W. Abbett. (See Reference 3.12-13.) The results are as follows:

EXAMPLE PROBLEM		*SOIL REACTIONS (kips/ft^2)*	
		Text Results	*FLXMAT Results*
1.	*Short beam*	$\rho_1 = 0.613$	$\rho_1 = 0.6217$
		$\rho_2 = 2.487$	$\rho_2 = 2.4872$

2.	*Medium beam*	$\rho_1 = 0.714$	$\rho_1 = 0.7146$
		$\rho_2 = 1.233$	$\rho_2 = 1.2334$
		$\rho_3 = 1.173$	$\rho_3 = 1.1721$
		$\rho_4 = 0.573$	$\rho_4 = 0.5743$

Long beam validation is not considered for the reason that all foundation mats utilizing the FLXMAT program do not fall into the long beam category.

A comparison of results indicated above demonstrates the accuracy of the program.

This program is referred to in Sections 3.8.5.4.3 and 3.8.5.4.6.

3.12.9 ISOFINITE

ISOFINITE is used in the design of flued head fittings. ISOFINITE is an isoparametric, three dimensional finite element program that is utilized for stress analysis of three-dimensional elastic continua. The program uses an eight-noded box element of arbitrary shape to build up the stiffness and stress characteristics by Gaussian integration. Each box has 33 degrees of freedom, 24 corresponding to the three motions at each of the eight nodes, and 9 internal degrees of freedom used to minimize strain energy. The 9 internal degrees of freedom are highly effective in eliminating shear error, thereby permitting the use of far fewer elements than are conventionally required.

Program input consists of coordinates of nodal points, element nodal numbers, load conditions, and boundary conditions. In the case of flued head fitting design, because of circular symmetry, a quarter plane representation involving 75 elements and 180 nodes is used. Pressure loads at the pipe inner surface are input as radial nodal forces.

Program output includes all input data, nodal displacements and stresses. Stress values are given on the six surfaces of each element. Corresponding principal stresses are also calculated and printed out.

ISOFINITE was originally developed by S. Levy of the General Electric Company in 1969 (Reference 3.12-14). It was further expanded and modified by N.E. Rieger of the Rochester Institute of Technology in 1971 for use by the National Forge Company. The program uses the Fortran IV computer language.

ISOFINITE is verified using the computer program NASTRAN. The stresses for penetration X-2 are determined using a 3-D flued head model with radial pressure forces applied to the internal surface. This simulated the 2-D axisymmetric pressure stress analysis obtained with NASTRAN.

For the axisymmetric finite element program, NASTRAN, the effects of the process pipe internal pressure is determined through the application of equivalent radial pressure forces at the nodes along the pipe inner surface. Pressure force magnitudes are given by

$$F_i = 2\,p\,r_i\,L_i$$

where

F_i = *radial force at node*

p = *internal pressure, 1250 psi*

r_i = *internal radius, 2.881 in.*

L_i = *equivalent length of pipe associated with the node*

For the axisymmetric pressure calculation using ISOFINITE, internal pressure is included in the computer model as x-, y- forces applied at the inner surface of the process pipe. Values of these forces are obtained from the expression

$$F_i = p\,r_i\,\frac{\pi}{10}L_i$$

where

F_i = *radial force at node*

p = *internal pressure, 1250 psi*

$\frac{\pi}{10}$ = *arc length of element surface*

L_i = *axial length of pipe relating to node*

The x-, y- coordinate forces are, therefore,

$$F_{xi} = F_i \sin \theta$$

$$F_{yi} = F_i \cos \theta$$

where is the angle subtended between the vertical y-axis and the local element plane.

Results of both ISOFINITE and NASTRAN are given in Table 3.12-2. As can be seen, there is close correlation between the deflections, with NASTRAN giving larger values throughout the flued head than ISOFINITE. This is due to the lack of rotational freedom at nodes with NASTRAN over the more flexible shear elements in ISOFINITE. This leads to prediction of higher stresses using ISOFINITE (as can be seen by comparing pages 2 and 3 of Table 3.12-2). The computer program ISOFINITE is therefore a conservative method for determining stresses in flued head fittings.

This program is referred to in Section 3.8.6.4.4.

3.12.10 ANSYS

ANSYS is a general-purpose finite element computer program designed to solve a variety of problems in engineering analysis.

The ANSYS program features the following capabilities:

a. Structural analysis including static elastic, plastic and creep, dynamic, seismic and dynamic plastic, and large deflection and stability analysis;

b. One-dimensional fluid flow analyses;

c. Transient heat transfer analysis including conduction, convection, and radiation with direct input to thermal-stress analyses;

d. An extensive finite element library, including gaps, friction interfaces, springs, cables (tension only), direct interfaces (compression only), curved elbows, etc. Many of the elements contain complete plastic, creep, and swelling capabilities;

e. Plotting - Geometry plotting is available for all elements in the ANSYS library, including isometric and perspective views of three-dimensional structures; and

f. Restart Capability - The ANSYS program has restart capability for several analyses types. An option is also available for saving the stiffness matrix once it is calculated for the structure, and using it for other loading conditions.

The program is maintained current by Swanson Analysis Systems, Inc., of Pittsburgh, Pennsylvania, and is supplied to General Electric for use on the Honeywell 6000.

The ANSYS program has been used for productive analyses since early 1970. Users now include the nuclear, pressure vessels and piping, mining, structures, bridge, chemicals, and automotive industries, as well as many consulting firms.

3.12.11 RELAP3

This program describes the behavior of water-cooled nuclear reactors during postulated accidents such as loss-of-coolant pump failure, or power transients. The behavior of the primary cooling system and the reactor is emphasized. The program calculates flaws, mass inventories, energy inventories pressures, temperatures, and qualities along with variables associated with reactor power, reactor heat transfer, or control systems.

RELAP3 is an NRC-accepted computer program and is in the public domain. For a complete discussion of this program see Reference 3.12-18.

This program is referred to in Sections 3.6.2.2.1b and 3.6.2.3.1.

3.12.11.1 RELAP4/MOD5

RELAP4 is a computer program written in FORTRAN IV for the digital computer analysis of nuclear reactors and related systems. It is primarily applied in the study of system transient response to postulated perturbations such as coolant loop rupture, circulation pump failure, power excursions, etc. The program was written to be used for water-cooled (PWR and BWR) reactors and can be used for scale models such as LOFT and SEMISCALE. Additional versatility extends its usefulness to related applications, such as ice condenser and containment subcompartment analysis. Specific options are available for reflood (FLOOD) analysis and for the NRC evaluation model.

3.12.11.2 S/RVDAM

This program is described in Section 3.9.

3.12.11.3 GOTHIC 7.0/8.1

GOTHIC (Generation of Thermal-Hydraulic Information for Containments) is a general purpose thermal-hydraulics computer program for design, licensing, safety and operating analysis of nuclear power plant containments and other confinement buildings. Applications of GOTHIC include evaluation of containment and containment sub-compartment response to the full spectrum of high energy line breaks within the design basis envelope as described in FSAR Chapter 6, Section 2. Applications may include pressure and temperature determination, equipment qualification profiles and inadvertent system initiation, and degradation or failure of engineered safety features.

GOTHIC was developed by Numerical Applications, Inc., and has been accepted by the NRC for numerous applications. For a complete description of this program, see References

3.12-27 and 3.12-28. Use of GOTHIC 7.0 is restricted to applications consistent with NRC approved River Bend Safety Evaluation (Reference 3.12-29). GOTHIC 8.1 is strictly approved only for HELB analysis of RWCU piping within the Radwaste Building.

3.12.12 CB&I PROGRAM 711 - "GENOZZ"

This program is described in Section 3.9.

3.12.13 CB&I PROGRAM 948 - "NAPALM"

This program is described in Section 3.9.

3.12.14 CB&I PROGRAM 1027

This program is described in Section 3.9.

3.12.15 CB&I PROGRAM 846

This program is described in Section 3.9.

3.12.16 CB&I PROGRAM 781 - "KALNINS"

This program is described in Section 3.9.

3.12.17 CB&I PROGRAM 979 - "ASFAST"

This program is described in Section 3.9.

3.12.18 CB&I PROGRAM 766 - "TEMAPR"

This program is described in Section 3.9.

3.12.19 CB&I PROGRAM 767 - "PRINCESS"

This program is described in Section 3.9.

3.12.20 CB&I PROGRAM 928 - "TGRV"

This program is described in Section 3.9.

3.12.21 CB&I PROGRAM 962 - "E0962A"

This program is described in Section 3.9.

3.12.22 CB&I PROGRAM 984

This program is described in Section 3.9.

3.12.23 CB&I PROGRAM 992 - "GASP"

This program is described in Section 3.9.

3.12.24 CB&I PROGRAM 1037 - "DUNHAM'S"

This program is described in Section 3.9.

3.12.25 CB&I PROGRAM 1335

This program is described in Section 3.9.

3.12.26 CB&I PROGRAM 1606 and 1657 - "HAP"

This program is described in Section 3.9.

3.12.27 CB&I PROGRAM 1635

This program is described in Section 3.9.

3.12.28 CB&I PROGRAM 953

This program is described in Section 3.9.

3.12.29 ALGOR SUPERSAP COMPUTER PROGRAM

The Algor SUPERSAP computer program, developed by Algor Interactive systems, Inc. is a widely used general purpose computer program employing finite element technology for the solution of several classes of engineering analysis problems. Structural analysis may be performed in two or three dimensions including axisymmetric and planar problems. The matrix displacement method of analysis is mathematically modeled as a system of node points interconnected by various "finite elements." The interconnecting finite elements are assigned stiffnesses equivalent to that of the actual structure. The static analysis portion of SUPERSAP is used to solve for the displacements, stresses, and strains in structures under the action of applied loads.

3.12.30 MASS

This program is referred to in Section 3.9.

3.12.31 MULTISHELL

This program is referred to in Section 3.9.

3.12.32 SAP4G07

Structural Analysis Program 4 G07 (SAP4G07) is a finite element program that conducts static and dynamic analysis of linear, three-dimensional structural or piping systems. The main applications of this program at General Electric Hitachi are mainly to perform the dynamic and vibration analyses of reactor, piping, heat exchanger, pump and containment structures.

The finite element model serves as an input to the SAP4 program. This model consists of definitions in terms of element data, joint data, mass matrix data and/or concentrated mass data. The static loads are defined in terms of material weight, temperature, pressure and concentrated loads. Likewise the dynamic loads are defined in terms of acceleration and force time histories, or displacement/acceleration response spectra.

The SAP4 program then computes the following outputs: vibration modes and frequencies, static deflections and stresses, maxima and time histories of nodal displacement, nodal accelerations, element forces and stresses.

3.12.33 PDA

This program is referred to in Section 3.6.2.2.2.2 and described in Section 3.9.

3.12.34 DELETED

3.12.35 DELETED

3.12.36 DELETED

3.12.37 ADLPIPE

"ADLPIPE" is a computer program used in the analysis of complex piping systems. This program is accessed on the Burns & Roe NAS Series 5000/6000 computer. The ADLPIPE Program has the capability of handling static and dynamic loading with stress reports meeting both ASME and ANSI Codes.

Static loads may be thermal, deadweight, static "g" seismic, externally applied loads, and movements, wind, and pressure. Dynamic loads are multiple seismic response spectra or time history forcing functions. Output may also be supplemented by geometry plots (orthographic, isometric and steroscopic drawings).

3.12.38 NUPIPE-IIM (Version 1.6.3)

"NUPIPE" is a general purpose piping analysis program with features and capabilities analogous to those described for the ADLPIPE computer code referenced in Section 3.12.37.

NUPIPE is a product of the Quadrex Corporation and is executed via Control Data Corporation's Cybernet computer system. The main application of NUPIPE at CGS is qualification of safety-related instrumentation lines (i.e. tubing), with limited application to small and large bore piping systems. The program, similar to ADLPIPE, is fully benchmarked for accuracy and correctness and may be applied to the full range of ASME and ANSI tubing/piping analyses.

3.12.39 TPIPE (Version 4.2)

Developed by PMB Systems Engineering Inc., San Francisco, and the Tennessee Valley Authority. TPIPE is a 3-dimensional structural analysis program used by Gilbert Commonwealth on the analysis of safety class 1, 2, and 3 piping systems. The program is capable of static and dynamic analysis for very large piping systems and has a postprocessor giving pipe member forces and moments to the requirements of the stress equations of ASME Code Section III.

The integrity of the program was accomplished by comparison of results (for many examples) with three independent computer programs: PIPESD, POSOL, AND SAPIV.

3.12.40 PIPESUP-CS102 (Version 2): Gilbert Commonwealth

Developed for use on the TRS-80 Model II, this Microcomputer program is used in the design of the three most commonly used smallbore pipe support types.

a. Cantilever type,
b. Cantilever with one brace, and
c. Cantilever with two braces.

3.12.41 P001 (Version 6.0): Gilbert Commonwealth

Developed for use on the TRS-80 Model II Microcomputer, this program calculates support reactions, maximum deflections, movements, and bending stresses for single span piping. The program can handle gravity and seismic loadings and four restraint configurations are available: simply supported, cantilever, propped cantilever, and fixed. These conditions are available for 0.25 in. through 3 in. piping (schedules 10S, 40, 80, and 160). Any combination of up to nine uniform and eight point loads can be modeled; however, all loads and reactions must be normal to the pipe and in the same plane. Note that uniform loads may be applied to the entire piping system or any portion of it.

3.12.42 P002 (Version 4.0): Gilbert Commonwealth

Developed for use on the TRS-80 Model II Microcomputer, this program calculates additional pipe span tables in accordance with Energy Northwest contract CO-208. Modifications are

made to Tables 4.3.3.1 in accordance with Tables 4.3.3.1 through 4.3.3.9 and 5.9. These provide modifications for period of vibration, temperature, weight, concentrated mass, and change of direction. The complete modifications are printed with the total multiplication factor used to modify the original table also printed.

3.12.43 P003 (Version 5.0): Gilbert Commonwealth

Developed for the use on the TRS-80 Model II Microcomputer, this program calculates pipe weights for 0.25 in. through 2 in. pipe for schedules 10, 40, 80, and 160 with or without water and various insulations. (All weights are from Tables D, E, F of Energy Northwest Contract CO-208.)

3.12.44 T-MOVE (Version V0-00): Gilbert Commonwealth

Developed for the use on the TRS-80 Model II Microcomputer, this program is used to predict thermal movements in the containment building. Thermal displacements are calculated for normal plant operation and accident operation.

3.12.45 BPIPE-CS085 (Version 2)

Written in Fortan 4, this program is accessed by Gilbert Commonwealth on their "Librarian System." This program computes stresses at the elbow of a buried pipe due to thermal pressure and seismic loads. The following program features include

a. Axial, bending, and shear effects in both legs of the pipe are coupled using a matrix formulation;

b. Friction and elastic soil shear deformation effects are included in the expression for pipe axial stiffness. The nonlinear nature of the friction problem is incorporated through an iterative procedure;

c. Far end fixity effects (boundary conditions) can be specified for each leg;

d. Member releases at the elbow can be specified for each leg to simulate slip couplings, etc.;

e. An arbitrary angle (not just 90) is specified for the bend at the elbow. A proper matrix transformation is employed to incorporate all coupling effects (shear-axial etc.);

f. A different elbow wall thickness than the straight pipe thickness can be specified;

g. Stress intensification is included to compute bend or elbow bending stress. Stress combinations are computed and compared with code; and

h. The program computes the axial and shear-bend fixity lengths to alert the user as to the importance of far end fixity conditions.

3.12.46 SPLUG (Originators J. Kutzen, J. B. Mahoney, V. Ral-Bahade)

Accessed through the NAS Series 5000/6000 Main Frame computer at Burns & Roe, New Jersey, this program is an application of WRC Bulletin No. 107 from which local stresses in cylindrical and spherical shell attachments are calculated. The program calculates and tabulates local membrane and bending stresses, combined stress intensity and shear stresses.

3.12.47 REFERENCES

3.12-1 Whitman, R.V., Soil-Structure Interaction, paper presented before M.I.T. seminar, Cambridge, Mass., Spring 1969 and included in Seismic Design for Nuclear Plants, Hansen, R. J. editor, M.I.T. Press Cambridge, Mass., 1970, pp. 245-269.

3.12-2 Wilson, E.L., "Structural Analysis of Axisymmetric Solids," American Institute of Aeronautics and Astronautics Vol. 3, No. 12, (December 1965).

3.12-3 Flugge, W., Stresses in Shells, Springer-Verlag, N.Y., Inc., New York, N.Y., 1966.

3.12-4 Gol'Denveizer, A.L., Theory of Elastic Thin Shells, Pergamon Press, New York, N.Y., 1961.

3.12-5 DELETED

3.12-6 Texcan, S.S., "Computer Analysis of Plane and Space Structures," Journal of the Structural Division, ASCE Vol. 92, No. ST 2, Proceedings Paper 4780, pp. 143-173, (April 1966).

3.12-7 Timoshenko, S., and Wornowsky-Krieger, S., Theory of Plates and Shells, Second Edition, McGraw Hill Book Company, Inc., New York, N.Y., 1959.

3.12-8 Wang, Chu Kia, Matrix Methods of Structural Analysis, International Textbook Co., Scranton, Pa., 1966.

3.12-9 *Zudans, Z., "Analysis of Axisymmetric Redundant Structures," Nuclear Structural Engineering 1, North-Holland Publishing Co., Amsterdam, pp. 159-185, (1965).*

3.12-10 *Takahaski, S.K., Dong, S.B., Finite Element Analyses of Solids of Revolution, U.S. Naval Facilities Engineering Command, Naval Civil Engineering Laboratory, Technical Report R567, Port Hueneme, California, March 1968.*

3.12-11 *"ICES STRUDLE Improvements," McDonnell Douglas Automation Company, St. Louis, Missouri, February, 1973.*

3.12-12 *Svalbonas, V., "Numerical Analysis of Stiffened Shells of Revolution Volume I: Theory Manual."*

3.12-13 *Abbett, R.W., "Beams on Elastic Foundations," Section 22 of American Civil Engineering Practice, Volume III, John Wiley and Sons, New York, N.Y. and Chapman and Hall, Ltd., London, 1957, pp. 95-103.*

3.12-14 *Levy, S., 3-D Isoparametric Finite Element Program ISOFINITE, General Electric Co., Corporate Research and Development, Technical Information Series, Report No. 71-C-191, Schenectady, New York, June 1971.*

3.12-15 *Young, D., "Response of Structural Systems to Ground Shock," ASME Journal: Shock and Structural Response, Editor: Millard, V., pp. 52-79, New York, (November 1960).*

3.12-16 *Greenstadt, J., "The Determination of the Characteristic Roots of a Matrix by the Jacobi Method," Mathematical Methods for Digital Computers, John Wiley and Sons, Inc. New York, N.Y., 1959, Chapter 7.*

3.12-17 *Wilkinson, The Algebraic Eigenvalue Problem, Clarendon Press, Oxford, 1965.*

3.12-18 *Rettig, W. H. et al., "RELAP3: A Computer Program for Reactor Blowdown Analysis," IN-1321, U.S., Atomic Energy Commission Scientific and Technical Report, Reactor Technology TID-4500, Idaho Operations Office, June 1970.*

3.12-19 *DELETED*

3.12-20 *DELETED*

3.12-21 *DELETED*

3.12-22 *DELETED*

3.12-23 *AISC, Specification for Design, Fabrication and Erection of Structural Steel for Buildings, American Institute of Steel Construction (1969).*

3.12-24 *ACI 318-71, "Building Code Requirements for Reinforced Concrete," American Concrete Institute (1971).*

3.12-25 *Idaho National Engineering Laboratory, RELAP4/MOD5, A Computer Program For Transient Thermal-Hydraulic Analysis of Nuclear Reactors and Related Systems, Volume I: RELAP4/MOD5 Description, Volume II: Program Implementation, Volume III: Checkout Application, National Technical Information Service, U.S. Department of Commerce, Springfield, Virginia, ANCR-NUREG-1335, September 1976.*

3.12-26 "SAP04G07 Users's Manual, Static and Dynamic Analysis of Mechanical and Piping Components by Finite Element Method," NEDO-10909, Revision 7, December 1979.

3.12-27 Zachry Nuclear Engineering Inc. (Formerly Numerical Applications Inc.), GOTHIC Thermal Hydraulic Analysis Package, Version 7.0 (QA), June 2001

3.12-28 Zachry Nuclear Engineering Inc. (Formerly Numerical Applications Inc.), GOTHIC Thermal Hydraulic Analysis Package, Version 8.1 (QA), September 2014

3.12-29 River Bend Safety Evaluation - Amendment No. 139 to Facility Operating License No. NPF-47 for the River Bend Station, Unit 1 approved May 20, 2014 via ML041410566

Table 3.12-1

DACSR Computer Program Verification DACSR Program Versus STARDYNE Program Frequency Comparison (Hz)

Mode	*DACSR*	*STARDYNE*	*% Difference*
1	*3.41899*	*3.4173*	*0.05*
2	*4.04607*	*4.0454*	*0.01*
3	*6.52622*	*6.5262*	*0*
4	*10.4538*	*10.4539*	*0*
5	*13.4950*	*13.4950*	*0*
6	*15.5987*	*15.5987*	*0*
7	*20.9143*	*20.9131*	*0*

Table 3.12-1

Modal Shape Comparison (Continued)

Mode	Node	Direction	DACSR	STARDYNE	% Difference
1	*1*	*TRANSLATION*	*1.0*	*1.0*	*0*
1	*2*	*TRANSLATION*	*0.094798*	*0.09443860*	*0.38*
1	*3*	*TRANSLATION*	*0.073115*	*0.074203256*	*1.49*
1	*4*	*TRANSLATION*	*0.056265*	*0.059767895*	*6.23*
1	*5*	*TRANSLATION*	*0.044278*	*0.044066432*	*0.48*
1	*6*	*TRANSLATION*	*0.056264*	*0.055998528*	*0.47*
1	*7*	*TRANSLATION*	*0.050659*	*0.050418222*	*0.48*
1	*1*	*ROTATION*	*0.000346255*	*0.000345357*	*0.26*
1	*2*	*ROTATION*	*0.000321196*	*0.000320296*	*0.28*
1	*3*	*ROTATION*	*0.000254565*	*0.000254659*	*0.04*
1	*4*	*ROTATION*	*0.000211389*	*0.000210694*	*0.33*
1	*5*	*ROTATION*	*0.000117812*	*0.000117394*	*0.36*
1	*6*	*ROTATION*	*0.000135774*	*0.000135256*	*0.38*
1	*7*	*ROTATION*	*0.000131294*	*0.000130802*	*0.38*

Table 3.12-1

Modal Shape Comparison (Continued)

Mode	Node	Direction	DACSR	STARDYNE	% Difference
3	*1*	*TRANSLATION*	*0.69002*	*0.688620885*	*0.20*
3	*3*	*TRANSLATION*	*0.49725*	*0.497217159*	*0.01*
3	*5*	*TRANSLATION*	*0.45323*	*0.453265733*	*0.01*
3	*7*	*TRANSLATION*	*0.21734*	*0.217404322*	*0.03*
3	*1*	*ROTATION*	*0.016681355*	*0.016682023*	*0*
3	*3*	*ROTATION*	*0.014636790*	*0.014636205*	*0*
3	*5*	*ROTATION*	*0.007712905*	*0.007712407*	*0.01*
3	*7*	*ROTATION*	*0.00843554*	*0.00843500*	*0.01*
5	*1*	*TRANSLATION*	*0.038966316*	*0.038921798*	*0.01*
5	*3*	*TRANSLATION*	*1.000000000*	*1.00000000*	*0*
5	*5*	*TRANSLATION*	*0.50942392*	*0.509626317*	*0.04*
5	*7*	*TRANSLATION*	*0.25701805*	*0.257044865*	*0.01*
5	*1*	*ROTATION*	*0.032264308*	*0.032274208*	*0.03*
5	*3*	*ROTATION*	*0.016006215*	*0.016005601*	*0*

Table 3.12-1

Modal Shape Comparison (Continued)

Mode	Node	Direction	DACSR	STARDYNE	% Difference
5	*5*	*ROTATION*	*0.005604970*	*0.00560528*	*0*
5	*7*	*ROTATION*	*0.010036175*	*0.010036397*	*0*
7	*1*	*TRANSLATION*	*0.080347174*	*0.0803057676*	*0.05*
7	*3*	*TRANSLATION*	*0.12327235*	*0.123366541*	*0.08*
7	*5*	*TRANSLATION*	*0.14277601*	*0.142648893*	*0.09*
7	*7*	*TRANSLATION*	*1.00000000*	*1.000000000*	*0*
7	*1*	*ROTATION*	*0.062406298*	*0.062542867*	*0.22*
7	*3*	*ROTATION*	*0.006965539*	*0.006097712*	*0.32*
7	*5*	*ROTATION*	*0.0023545011*	*0.002347585*	*0.29*
7	*7*	*ROTATION*	*0.024423497*	*0.02442371*	*0*

Table 3.12-1

Acceleration (g) Comparison Obtained By The Absolute Sum Method[a] (Continued)

Node	*DACSR X1*	*DYNRE 4 X1*	*% Difference*
1	*1.82661E+00*	*1.82324E+00*	*0.18*
2	*3.38043E-01*	*3.35377E-01*	*0.79*
3	*2.82879E-01*	*2.81895E-01*	*0.35*
4	*2.16947E-01*	*2.14633E-01*	*1.08*
5	*1.98629E-01*	*1.98131E-01*	*0.25*
6	*2.34196E-01*	*2.33873E-01*	*0.14*
7	*2.14037E-01*	*2.12973E-01*	*0.49*

Node	*DACSR X6*	*DYNRE 4 X6*	*% Difference*
1	*1.86357E-03*	*1.82812E-03*	*2.33*
2	*1.73161E-03*	*1.71051E-03*	*1.23*
3	*1.44085E-03*	*1.43783E-03*	*0.21*
4	*1.17287E-03*	*1.16839E-03*	*0.38*
5	*8.16169E-04*	*8.13861E-04*	*0.28*
6	*1.03815E-04*	*1.02027E-03*	*1.75*
7	*9.54772E-04*	*9.45200E-04*	*1.01*

[a] *X1 denotes horizontal translational acceleration due to horizontal base excitation. X2 denotes rotational acceleration due to horizontal base excitation.*

Table 3.12-1

Acceleration (g) Comparison Obtained By The Root Mean Square Method[a] (Continued)

Node	*DACSR X1*	*DYNRE 4 X1*	*% Difference*
1	*1.32587E+00*	*1.32352E-01*	*0.05*
2	*1.93621E-01*	*1.93606E-01*	*0.01*
3	*1.74340E-01*	*1.74406E-01*	*0.04*
4	*1.52166E-01*	*1.52236E-01*	*0.05*
5	*1.26814E-01*	*1.26899E-01*	*0.07*
6	*1.54137E-01*	*1.54238E-01*	*0.07*
7	*1.40968E-01*	*1.41061E-01*	*0.07*

Node	*DACSR X6*	*DYNRE 4 X6*	*% Difference*
1	*1.01148E-03*	*1.01043E-03*	*0.10*
2	*9.62895E-04*	*9.62230E-04*	*0.07*
3	*8.53000E-04*	*8.52735E-04*	*0.03*
4	*7.20125E-04*	*7.19931E-04*	*0.03*
5	*4.52437E-04*	*4.52359E-04*	*0.02*
6	*5.40420E-04*	*5.40097E-04*	*0.06*
7	*5.08601E-04*	*5.08468E-04*	*0.03*

[a] *X1 denotes horizontal translational acceleration due to horizontal base excitation. X6 denotes rotational acceleration due to horizontal base excitation.*

Table 3.12-1

Displacement Comparison Obtained by the Root Mean Square Method[a] (Continued)

Node	*DACSR X1*	*DYNRE 4 X1*	*% Difference*
1	*8.74855E-02*	*8.74131E-02*	*0.08*
2	*1.07928E-02*	*1.07850E-02*	*0.07*
3	*9.58983E-03*	*9.58743E-03*	*0.03*
4	*8.32096E-03*	*8.32080E-03*	*0.00*
5	*6.71647E-03*	*6.71782E-03*	*0.02*
6	*8.28021E-03*	*8.28137E-03*	*0.01*
7	*7.56965E-03*	*7.57101E-03*	*0.02*
Node	*DACSR X6*	*DYNRE 4 X6*	*% Difference*
1	*3.37770E-05*	*3.37147E-05*	*0.18*
2	*3.19740E-05*	*3.19160E-05*	*0.18*
3	*2.74793E-05*	*2.74401E-05*	*0.14*
4	*2.34891E-05*	*2.34484E-05*	*0.13*
5	*1.40948E-05*	*1.40810E-05*	*0.10*
6	*1.71246E-05*	*1.71122E-05*	*0.07*
7	*1.63059E-05*	*1.62933E-05*	*0.08*

[a] *X1 denotes horizontal translational acceleration due to horizontal base excitation. X2 denotes rotational acceleration due to horizontal base excitation.*

Table 3.12-2

ISOFINITE Computer Program Verification
Using Computer Program NASTRAN

Node (See Figure 3.12-4)	*ISOFINITE Deflection* (10^{-3} *in.*)	*NASTRAN Deflection* (10^{-3} *in.*)
01	*0.700*	*0.796*
03	*0.603*	*0.768*
05	*0.288*	*0.499*
07	*0.170*	*0.318*
11	*0.031*	*0.160*
15	*0.240*	*0.251*
23	*0.514*	*0.519*

Table 3.12-2

NASTRAN Pressure Loads (Continued)

Point[a]	*T-Stress (psi)*	*R-Stress (psi)*	*Z-Stress (psi)*	*Maximum Stress Intensity (psi)*
a	*8795*	*-6683*	*5573*	*15,478*
b	*8806*	*-59*	*6571*	*8865*
c	*7365*	*-575*	*4587*	*7940*
d	*5430*	*-643*	*3316*	*6073*
e	*3735*	*-498*	*2303*	*4233*
f	*2846*	*-616*	*1905*	*3462*
g	*1560*	*-15*	*1190*	*1575*
h	*1306*	*-716*	*1032*	*2022*
i	*842*	*126*	*-10*	*852*
j	*603*	*33*	*161*	*570*
k	*318*	*-218*	*111*	*536*
l	*297*	*-43*	*389*	*432*
m	*80*	*10*	*396*	*386*
n	*19*	*-13*	*414*	*427*
o	*-42*	*-22*	*423*	*465*
p	*-60*	*-23*	*648*	*708*
q	*-107*	*11*	*479*	*586*
r	*-72*	*1*	*441*	*513*

[a] *Refer to Figure 3.12-4*

Table 3.12-2

ISOFINITE Pressure Loads (Continued)

Point[a]	*X-Stress (psi)*	*Y-Stress (psi)*	*Z-Stress (psi)*	*Maximum Stress Intensity (psi)*
a	*14,916*	*1702*	*8530*	*13,214*
b	*16,462*	*1656*	*15,401*	*14,806*
c	*9537*	*-1322*	*8619*	*10,859*
d	*5530*	*-114*	*4936*	*5644*
e	*4579*	*-169*	*3967*	*4748*
f	*3729*	*21*	*3148*	*3708*
g	*2527*	*-386*	*2047*	*2913*
h	*1725*	*-108*	*1716*	*1833*
i	*766*	*215*	*283*	*551*
j	*281*	*-10*	*-46*	*327*
k	*94*	*-170*	*331*	*501*
l	*44*	*50*	*384*	*340*
m	*-17*	*128*	*478*	*495*
n	*-94*	*41*	*509*	*603*
o	*-136*	*19*	*513*	*649*
p	*-100*	*-26*	*518*	*618*
q	*-64*	*-71*	*501*	*565*
r	*70*	*73*	*511*	*441*

[a] *Refer to Figure 3.12-4*

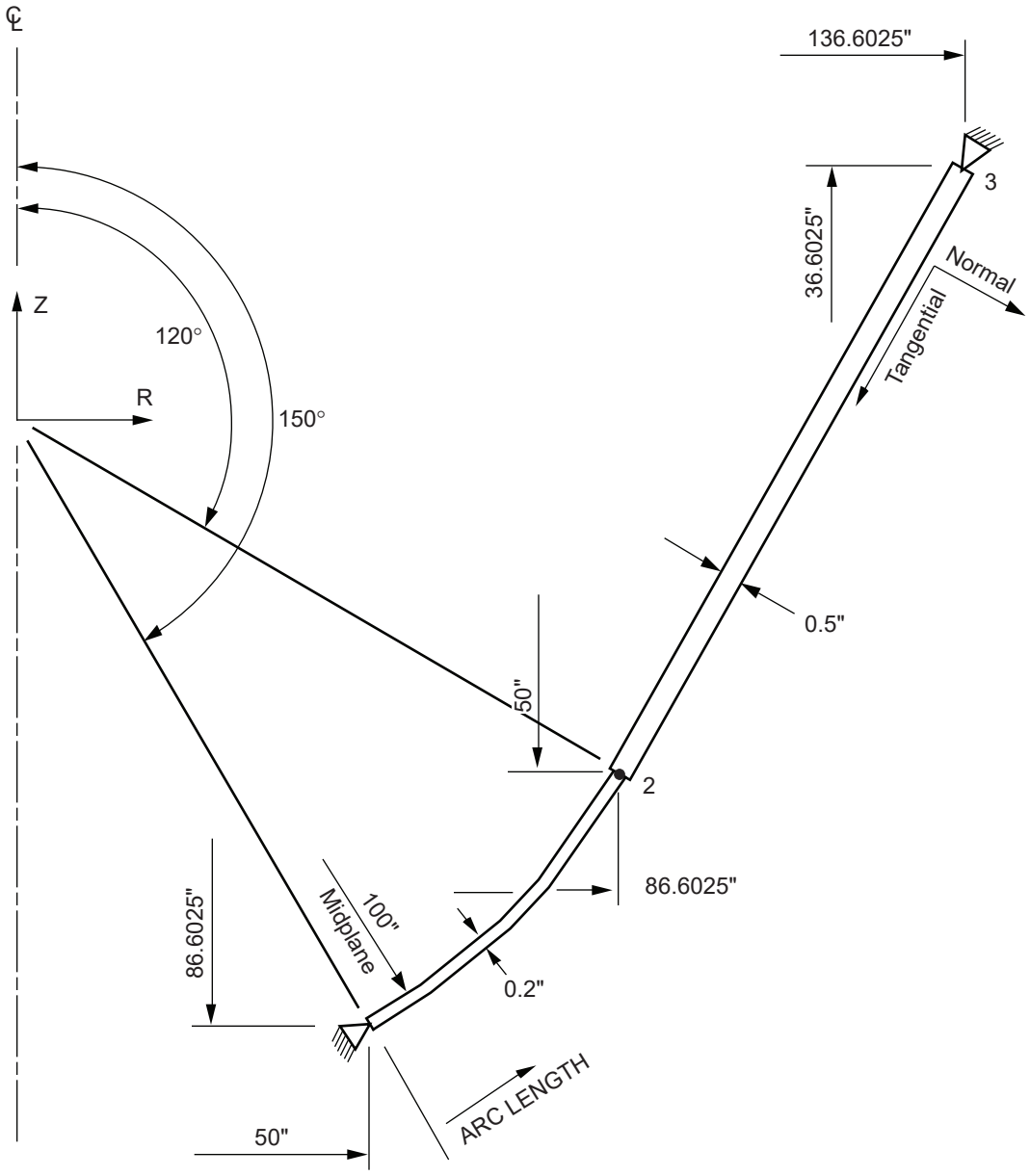

Loading: a) 20 psi (internal), Normal to Shell
b) 200°F rise above stress-free temperature

Columbia Generating Station **Final Safety Analysis Report**	**Computer Program AX2 - Verification Model**		
	Draw. No. 990306.96	Rev.	Figure 3.12-1

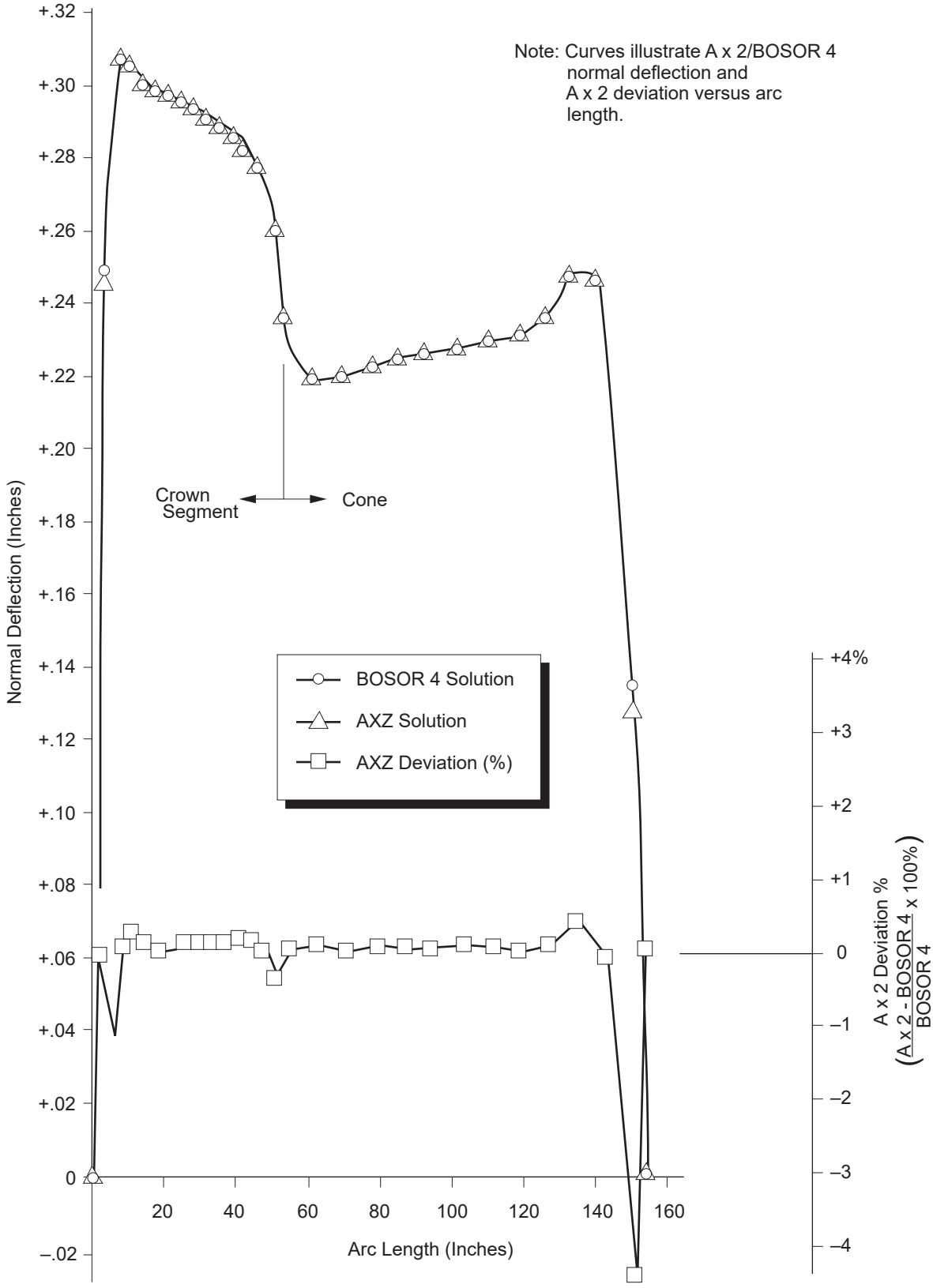

Columbia Generating Station
Final Safety Analysis Report

Normal AX2/BOSOR 4 Verification Problem

Draw. No. 990306.97	Rev.	Figure 3.12-2

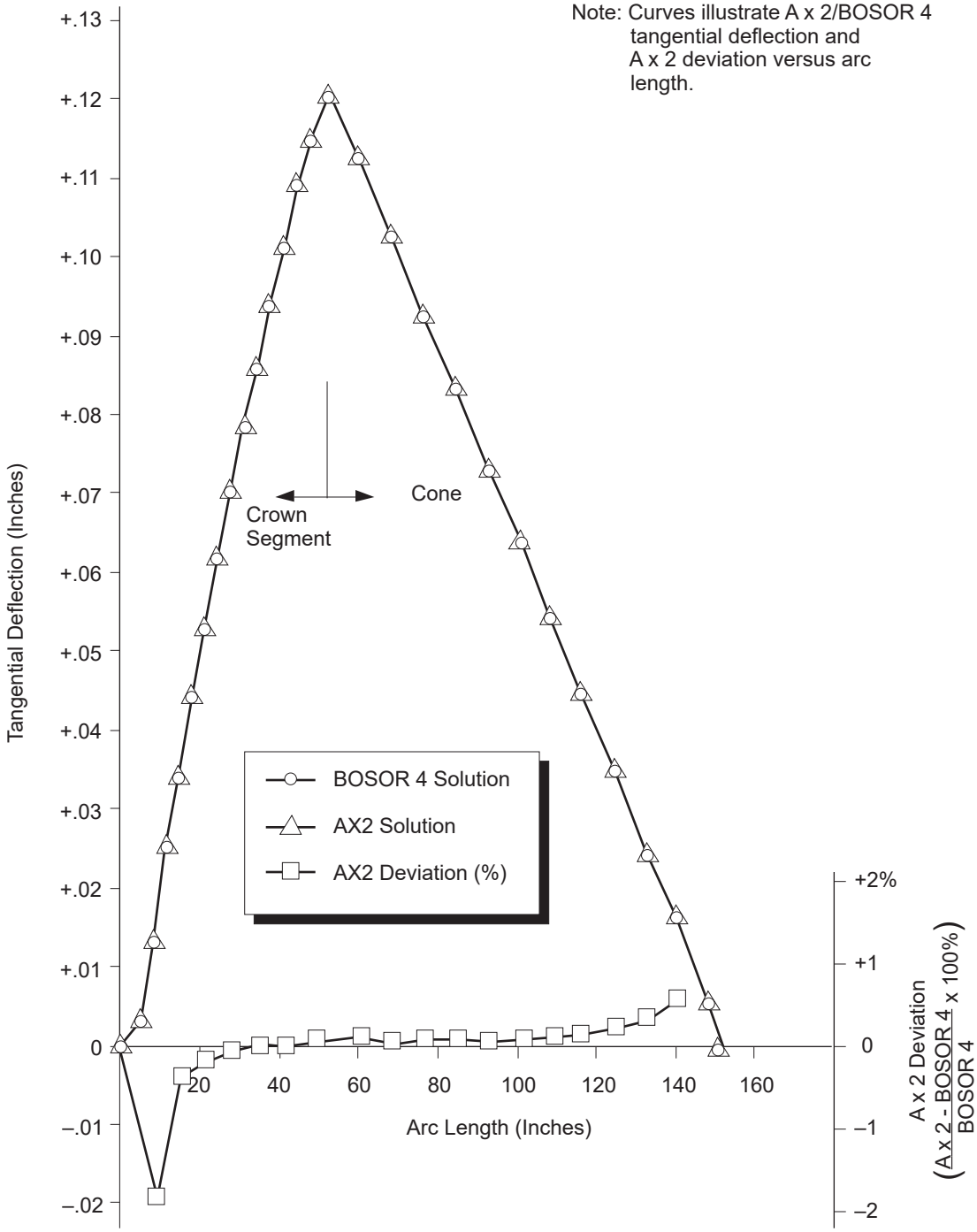

Tangential AX2/BOSOR 4 Verification Problem

Columbia Generating Station
Final Safety Analysis Report

Draw. No. 990306.98	Rev.	Figure 3.12-3

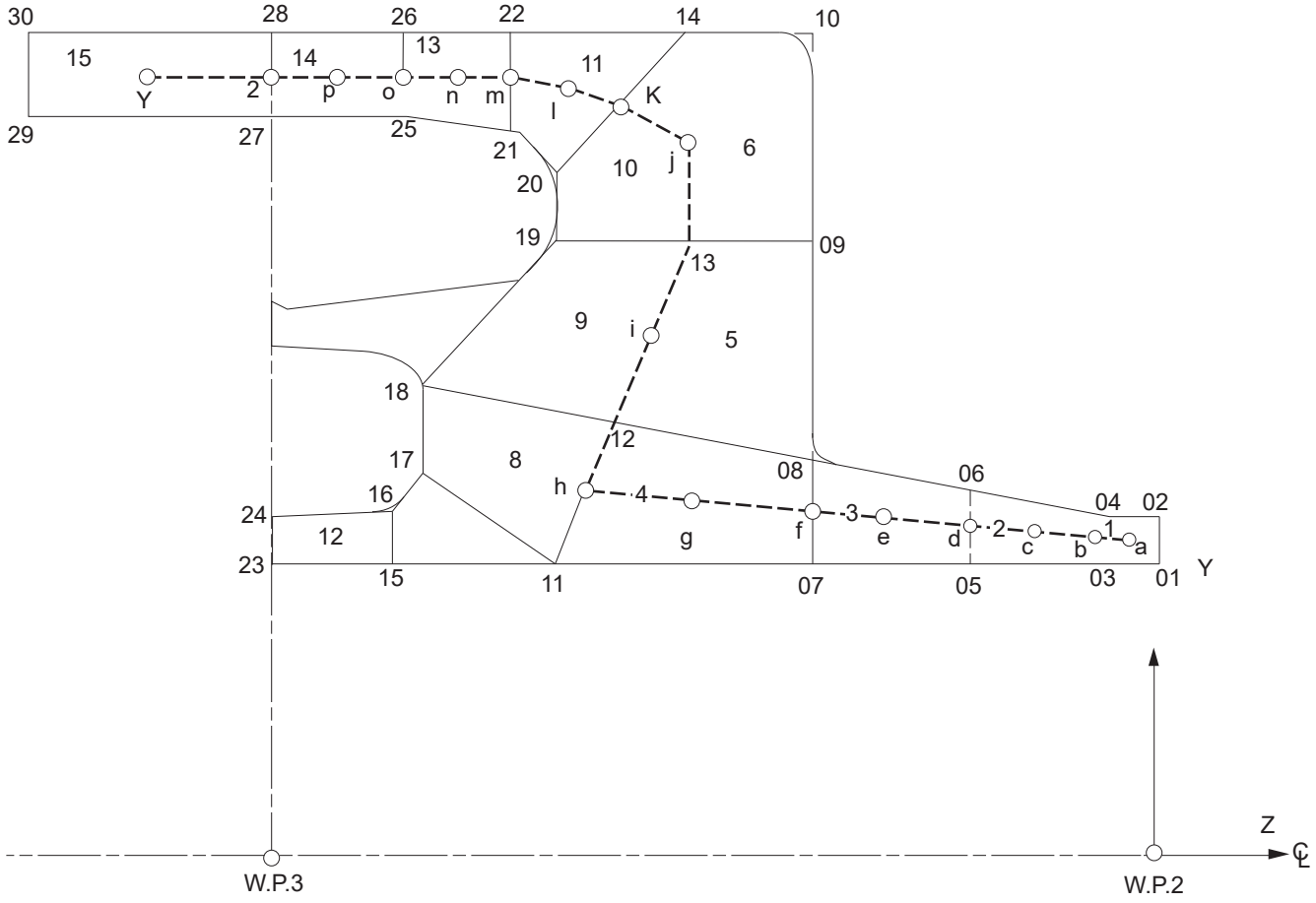

Columbia Generating Station Final Safety Analysis Report	Isofinite Grid for Flued Head X2		
	Draw. No. 990306.99	Rev.	Figure 3.12-4

Appendix 3A

PLANT DESIGN ASSESSMENT REPORT FOR SAFETY/RELIEF VALVES AND LOSS-OF-COOLANT ACCIDENT LOADS

TABLE OF CONTENTS

Section — Page

3A.1.1 CONFORMANCE TO NRC ACCEPTANCE CRITERIA 3A.1.1-1
3A.1.2 ROLE OF THE DESIGN ASSESSMENT REPORT 3A.1.2-1
3A.1.3 ASSESSMENT APPROACH 3A.1.3-1
3A.1.4 SUMMARY OF DESIGN ASSESSMENT REPORT CONTENT 3A.1.4-1

3A.2 SUMMARY AND CONCLUSIONS 3A.2.1-1
3A.2.1 GENERAL DESCRIPTION OF PLANT 3A.2.1-1
3A.2.1.1 Structures, Piping, and Components Directly Affected by Pool Dynamic Loads 3A.2.1-1
3A.2.1.2 Structures, Piping, and Components Indirectly Affected by Pool Dynamic Loads 3A.2.1-3
3A.2.2 SUMMARY OF CHANGES AND CONCLUSIONS 3A.2.2-1
3A.2.2.1 Summary of Changes to Preserve Design Margins 3A.2.2-1
3A.2.2.2 Conclusions 3A.2.2-1

3A.3 CONTAINMENT DYNAMIC FORCING FUNCTIONS 3A.3.1-1
3A.3.1 LOADS ASSOCIATED WITH SAFETY/RELIEF VALVE ACTUATION 3A.3.1-1
3A.3.1.1 Description of the Safety/Relief System 3A.3.1-1
3A.3.1.2 Description of the Phenomena and Resulting Loads 3A.3.1-1
3A.3.1.2.1 Water Clearing Loads 3A.3.1-2
3A.3.1.2.2 Air Clearing Loads 3A.3.1-2
3A.3.1.2.3 Steam Condensation Loads 3A.3.1-2
3A.3.1.3 Safety/Relief Valve Air Clearing Loads 3A.3.1-3
3A.3.1.3.1 Boundary Loads 3A.3.1-3
3A.3.1.3.1.1 Spatial Distribution of Boundary Pressures 3A.3.1-3
3A.3.1.3.1.2 Pressure Wave Forms 3A.3.1-4
3A.3.1.3.1.3 Design Maximum Pressure Amplitude 3A.3.1-4
3A.3.1.3.2 Submerged Structure Loads 3A.3.1-4
3A.3.1.3.2.1 Peak Safety/Relief Valve Dynamic Loads 3A.3.1-5
3A.3.1.3.2.2 Time Dependence of Safety/Relief Valve Loads and Dynamic Load Factors 3A.3.1-5
3A.3.1.3.2.3 Safety/Relief Valve Loads on Structures 3A.3.1-5
3A.3.1.4 References 3A.3.1-6

Appendix 3A

PLANT DESIGN ASSESSMENT REPORT FOR SAFETY/RELIEF VALVES AND LOSS-OF-COOLANT ACCIDENT LOADS

TABLE OF CONTENTS (Continued)

Section — Page

3A.3.2 LOADS ASSOCIATED WITH LOSS-OF-COOLANT ACCIDENT 3A.3.2-1
3A.3.2.1 Description of Pressure Suppression System 3A.3.2-1
3A.3.2.2 Description of the Phenomena and Resulting Loads 3A.3.2-1
3A.3.2.3 Short-Term Loss-of-Coolant Accident Loads 3A.3.2-3
3A.3.2.3.1 Analytical Models and Supporting Test Data 3A.3.2-3
3A.3.2.3.1.1 Vent Clearing Jet and Induced Flow Field Model 3A.3.2-3
3A.3.2.3.1.2 Loss-of-Coolant Accident Bubble Charging Model 3A.3.2-4
3A.3.2.3.1.3 Pool Swell Analytical Model 3A.3.2-5
3A.3.2.3.1.4 Fallback Model 3A.3.2-6
3A.3.2.3.2 Boundary Loads 3A.3.2-6
3A.3.2.3.3 Structure Loads 3A.3.2-6
3A.3.2.3.3.1 Loads on Major Structures 3A.3.2-9
3A.3.2.3.3.2 Loads on Fully Submerged Piping Systems Below Elevation 454.4 ft 3A.3.2-10
3A.3.2.3.3.3 Loads on Partially Submerged Piping Systems 3A.3.2-10
3A.3.2.3.3.4 Loads on Piping Systems and Structural Components Between Elevations 454.4 ft and 484.4 ft 3A.3.2-11
3A.3.2.4 Long-Term Hydrodynamic Loads 3A.3.2-11
3A.3.2.4.1 Analytical Models and Supporting Test Data 3A.3.2-11
3A.3.2.4.1.1 Chugging Loads 3A.3.2-11
3A.3.2.4.1.2 Condensation Oscillation Loads 3A.3.2-12
3A.3.2.4.2 Boundary Loads 3A.3.2-12
3A.3.2.4.2.1 Chugging Loads 3A.3.2-12
3A.3.2.4.2.2 Condensation Oscillation Loads 3A.3.2-13
3A.3.2.4.3 Submerged Structure Loads 3A.3.2-13
3A.3.2.4.3.1 Condensation Oscillation Loads 3A.3.2-13
3A.3.2.4.3.2 Chugging Loads 3A.3.2-13
3A.3.2.4.4 Lateral Loads on Downcomer Vents 3A.3.2-15
3A.3.2.5 Pressure and Temperature Transients 3A.3.2-16
3A.3.2.5.1 Results for CGS 3A.3.2-17
3A.3.2.5.2 Differential Pressure Load on the Diaphragm Floor 3A.3.2-18
3A.3.2.6 Building Response to Loss-of-Coolant Accident Loads 3A.3.2-18
3A.3.2.7 References 3A.3.2-18

Appendix 3A

PLANT DESIGN ASSESSMENT REPORT FOR SAFETY/RELIEF VALVES AND LOSS-OF-COOLANT ACCIDENT LOADS

TABLE OF CONTENTS (Continued)

Section — Page

3A.3.3 LOAD SUMMARY 3A.3.3-1
3A.3.4 SEQUENCE OF DYNAMIC LOADS 3A.3.4-1
3A.3.5 LOAD COMBINATIONS AND ACCEPTANCE CRITERIA 3A.3.5-1
3A.3.5.1 Steel Containment Structure 3A.3.5-1
3A.3.5.1.1 Definitions 3A.3.5-1
3A.3.5.1.2 Load Combinations 3A.3.5-2
3A.3.5.1.3 Acceptance Criteria 3A.3.5-3
3A.3.5.2 Reinforced-Concrete Structures 3A.3.5-3
3A.3.5.2.1 Definitions 3A.3.5-3
3A.3.5.2.2 Load Combinations 3A.3.5-4
3A.3.5.2.3 Acceptance Criteria 3A.3.5-5
3A.3.5.3 Steel Structures 3A.3.5-5
3A.3.5.3.1 Definitions 3A.3.5-5
3A.3.5.3.2 Load Combinations 3A.3.5-5
3A.3.5.3.3 Acceptance Criteria 3A.3.5-5
3A.3.5.4 Piping Systems 3A.3.5-6
3A.3.5.4.1 Definitions 3A.3.5-6
3A.3.5.4.2 Load Combinations 3A.3.5-7
3A.3.5.4.3 Acceptance Criteria 3A.3.5-8
3A.3.5.5 References 3A.3.5-8

3A.4 DESIGN ASSESSMENT 3A.4.1-1
3A.4.1 SUPPRESSION POOL BOUNDARY STRUCTURES 3A.4.1-1
3A.4.1.1 Assessment of Steel Containment Structure 3A.4.1-1
3A.4.1.1.1 Loads Used for Assessment 3A.4.1-1
3A.4.1.1.1.1 Safety/Relief Valve Loads 3A.4.1-1
3A.4.1.1.1.1.1 Single Valve Discharge Case 3A.4.1-2
3A.4.1.1.1.1.2 Two Valves Discharge Case 3A.4.1-2
3A.4.1.1.1.1.3 Automatic Depressurization System Valves Discharge Case 3A.4.1-2
3A.4.1.1.1.1.4 All Valves Discharge Case 3A.4.1-2
3A.4.1.1.1.2 Loss-of-Coolant Accident Loads 3A.4.1-2
3A.4.1.1.1.2.1 Chugging Loads 3A.4.1-2
3A.4.1.1.1.2.2 High and Medium Mass Flux Condensation Oscillations 3A.4.1-2
3A.4.1.1.1.2.3 Other Loss-of-Coolant Accident Loads 3A.4.1-3

Appendix 3A

PLANT DESIGN ASSESSMENT REPORT FOR SAFETY/RELIEF VALVES AND LOSS-OF-COOLANT ACCIDENT LOADS

TABLE OF CONTENTS (Continued)

Section — Page

3A.4.1.1.1.3 Other Significant Loads 3A.4.1-3
3A.4.1.1.2 Controlling Load Combinations 3A.4.1-4
3A.4.1.1.3 Acceptance Criteria 3A.4.1-4
3A.4.1.1.4 Method of Analysis 3A.4.1-5
3A.4.1.1.4.1 Formulation of the Problem 3A.4.1-5
3A.4.1.1.4.2 Mathematical Model 3A.4.1-5
3A.4.1.1.4.3 Coupled Equations of Motion 3A.4.1-5
3A.4.1.1.4.4 Numerical Solution 3A.4.1-6
3A.4.1.1.4.5 Computer Program 3A.4.1-6
3A.4.1.1.5 Results and Design Margin 3A.4.1-6
3A.4.1.1.5.1 Results of Analysis 3A.4.1-6
3A.4.1.1.5.2 Assessment Results 3A.4.1-8
3A.4.1.2 Basemat 3A.4.1-8
3A.4.1.2.1 Loads Used for Assessment 3A.4.1-9
3A.4.1.2.1.1 Safety/Relief Valve Loads 3A.4.1-9
3A.4.1.2.1.2 Loss-of-Coolant Accident Loads 3A.4.1-9
3A.4.1.2.1.3 Other Significant Loads 3A.4.1-9
3A.4.1.2.2 Applicable Load Combinations and Acceptance Criteria 3A.4.1-9
3A.4.1.2.3 Method of Analysis 3A.4.1-9
3A.4.1.2.3.1 Effects of E_O, E_{SS}, D, L 3A.4.1-10
3A.4.1.2.3.2 Effect of P_{SR}, P_B 3A.4.1-10
3A.4.1.2.3.3 Critical Load Combination 3A.4.1-10
3A.4.1.2.3.4 Capacity 3A.4.1-10
3A.4.1.2.4 Results and Design Margins 3A.4.1-10
3A.4.1.3 Pedestal 3A.4.1-11
3A.4.1.3.1 Loads Used for Assessment 3A.4.1-11
3A.4.1.3.1.1 Safety/Relief Valve Loads 3A.4.1-11
3A.4.1.3.1.2 Loss-of-Coolant Accident Loads 3A.4.1-11
3A.4.1.3.1.3 Other Significant Loads 3A.4.1-11
3A.4.1.3.2 Applicable Load Combinations and Acceptance Criteria 3A.4.1-11
3A.4.1.3.3 Method of Analysis 3A.4.1-12
3A.4.1.3.3.1 Asymmetric Action 3A.4.1-12
3A.4.1.3.3.2 Symmetric Action 3A.4.1-12
3A.4.1.3.4 Results and Design Margins 3A.4.1-13

Appendix 3A

PLANT DESIGN ASSESSMENT REPORT FOR SAFETY/RELIEF VALVES AND LOSS-OF-COOLANT ACCIDENT LOADS

TABLE OF CONTENTS (Continued)

Section — Page

3A.4.1.4 Diaphragm Floor 3A.4.1-14
3A.4.1.4.1 Loads Used for Assessment 3A.4.1-14
3A.4.1.4.1.1 Safety/Relief Valve Actuation Loads 3A.4.1-14
3A.4.1.4.1.2 Loss-of-Coolant Accident Loads 3A.4.1-14
3A.4.1.4.1.3 Other Significant Loads 3A.4.1-15
3A.4.1.4.2 Controlling Load Combinations 3A.4.1-15
3A.4.1.4.3 Acceptance Criteria 3A.4.1-15
3A.4.1.4.4 Method of Analysis 3A.4.1-15
3A.4.1.4.5 Results and Design Margins 3A.4.1-16
3A.4.1.5 Diaphragm Floor Seal 3A.4.1-17
3A.4.1.5.1 Loads Used for Assessment 3A.4.1-17
3A.4.1.5.2 Controlling Load Combination 3A.4.1-18
3A.4.1.5.3 Acceptance Criteria 3A.4.1-18
3A.4.1.5.4 Method of Analysis 3A.4.1-19
3A.4.1.5.5 Results and Design Margins 3A.4.1-19
3A.4.1.6 References 3A.4.1-19
3A.4.2 SUPPRESSION POOL MAJOR STRUCTURES AND COMPONENTS .. 3A.4.2-1
3A.4.2.1 Downcomer Bracing System 3A.4.2-1
3A.4.2.1.1 Description of System 3A.4.2-1
3A.4.2.1.2 Loads Used for Assessment 3A.4.2-2
3A.4.2.1.2.1 Safety/Relief Valve Actuation Loads 3A.4.2-2
3A.4.2.1.2.2 Loss-of-Coolant Accident Loads 3A.4.2-2
3A.4.2.1.2.3 Other Significant Loads 3A.4.2-4
3A.4.2.1.3 Controlling Load Combinations and Acceptance Criteria 3A.4.2-4
3A.4.2.1.4 Method of Analysis 3A.4.2-4
3A.4.2.1.4.1 Analysis for Horizontal Loads 3A.4.2-5
3A.4.2.1.4.2 Analysis for Vertical Loads 3A.4.2-5
3A.4.2.1.4.3 Design Load Conditions 3A.4.2-5
3A.4.2.1.5 Results and Design Margin 3A.4.2-8
3A.4.2.1.5.1 Principal Results 3A.4.2-8
3A.4.2.1.5.2 Design Margins 3A.4.2-9
3A.4.2.2 Columns 3A.4.2-9
3A.4.2.2.1 Loads Used for Assessment 3A.4.2-9
3A.4.2.2.1.1 Safety/Relief Valve Actuation Loads 3A.4.2-9

Appendix 3A

PLANT DESIGN ASSESSMENT REPORT FOR SAFETY/RELIEF VALVES AND LOSS-OF-COOLANT ACCIDENT LOADS

TABLE OF CONTENTS (Continued)

Section — Page

3A.4.2.2.1.2 Loss-of-Coolant Accident Loads 3A.4.2-10
3A.4.2.2.1.3 Other Significant Loads 3A.4.2-11
3A.4.2.2.2 Applicable Load Combinations and Acceptance Criteria 3A.4.2-11
3A.4.2.2.3 Method of Analysis 3A.4.2-11
3A.4.2.2.4 Results and Design Margins 3A.4.2-14
3A.4.2.3 Downcomers 3A.4.2-14
3A.4.2.3.1 Loads Used for Assessment 3A.4.2-15
3A.4.2.3.2 Load Combination and Acceptance Criteria 3A.4.2-16
3A.4.2.3.3 Method of Analysis 3A.4.2-17
3A.4.2.3.3.1 Static Analysis 3A.4.2-17
3A.4.2.3.3.2 Response Spectrum Analysis 3A.4.2-17
3A.4.2.3.4 Results and Design Margin 3A.4.2-17
3A.4.2.3.5 Fatigue Evaluations 3A.4.2-18
3A.4.2.4 Safety/Relief Valve Piping Systems 3A.4.2-18
3A.4.2.4.1 Loads Used for Assessment 3A.4.2-19
3A.4.2.4.2 Load Combination and Acceptance Criteria 3A.4.2-19
3A.4.2.4.3 Allowable Stress Limits (Equation 9 of NC-3652 and NC-3611, Reference 3A.4.2-1) 3A.4.2-20
3A.4.2.4.4 Method of Analysis 3A.4.2-20
3A.4.2.4.4.1 Static Analysis 3A.4.2-20
3A.4.2.4.4.2 Response Spectrum Analysis 3A.4.2-20
3A.4.2.4.4.3 Time History Analysis 3A.4.2-20
3A.4.2.4.5 Results and Design Margin 3A.4.2-20
3A.4.2.4.6 Fatigue Evaluations 3A.4.2-21
3A.4.2.5 Quencher 3A.4.2-21
3A.4.2.5.1 Loads Used for Assessment 3A.4.2-22
3A.4.2.5.2 Load Combination Acceptance Criteria 3A.4.2-22
3A.4.2.5.3 Evaluation 3A.4.2-22
3A.4.2.6 Platforms and Ladders 3A.4.2-23
3A.4.2.6.1 Loads Used for Assessment 3A.4.2-23
3A.4.2.6.1.1 Safety/Relief Valve Operation Loads 3A.4.2-23
3A.4.2.6.1.2 Loss-of-Coolant Accident Loads 3A.4.2-23
3A.4.2.6.1.3 Other Significant Loads 3A.4.2-23
3A.4.2.6.2 Controlling Load Combinations 3A.4.2-24

Appendix 3A

PLANT DESIGN ASSESSMENT REPORT FOR SAFETY/RELIEF VALVES AND LOSS-OF-COOLANT ACCIDENT LOADS

TABLE OF CONTENTS (Continued)

Section — Page

3A.4.2.6.3 Acceptance Criteria 3A.4.2-24
3A.4.2.6.4 Method of Analysis 3A.4.2-24
3A.4.2.6.5 Results 3A.4.2-24
3A.4.2.7 References 3A.4.2-25
3A.4.3 MISCELLANEOUS SUPPRESSION POOL PIPING SYSTEMS 3A.4.3-1
3A.4.3.1 Loads Used for Assessment 3A.4.3-1
3A.4.3.2 Load Combination and Acceptance Criteria 3A.4.3-1
3A.4.3.3 Method of Analysis 3A.4.3-1
3A.4.3.4 Results and Design Margins 3A.4.3-2

3A.5 EFFECTS DUE TO BUILDING RESPONSES TO SAFETY/RELIEF VALVE DISCHARGE AND LOSS-OF-COOLANT ACCIDENT LOADS 3A.5.1-1
3A.5.1 BUILDING RESPONSES TO SAFETY/RELIEF VALVE DISCHARGE LOADS 3A.5.1-1
3A.5.1.1 Analytical Model 3A.5.1-1
3A.5.1.1.1 Overall Building Model 3A.5.1-1
3A.5.1.1.2 Steel Containment Shell Model 3A.5.1-1
3A.5.1.2 Method of Analysis 3A.5.1-1
3A.5.1.3 Safety/Relief Valve Discharge Load Cases 3A.5.1-2
3A.5.1.3.1 Response to All Valve Discharge 3A.5.1-2
3A.5.1.3.2 Automatic Depressurization System Valves Discharge Case 3A.5.1-3
3A.5.1.3.3 Two Valves Discharge Case 3A.5.1-4
3A.5.1.3.4 Single Valve Discharge 3A.5.1-4
3A.5.2 BUILDING RESPONSES TO LOSS-OF-COOLANT ACCIDENT LOADS 3A.5.2-1
3A.5.2.1 Analytical Model 3A.5.2-1
3A.5.2.2 Method Of Analysis and Building Response 3A.5.2-1
3A.5.2.2.1 Reactor Building Response, Nearly Symmetric Loading - Acceleration Response Spectra 3A.5.2-2

Appendix 3A

PLANT DESIGN ASSESSMENT REPORT FOR SAFETY/RELIEF VALVES AND LOSS-OF-COOLANT ACCIDENT LOADS

TABLE OF CONTENTS (Continued)

Section — Page

ATTACHMENTS

3A.A Not used

3A.B Three-Dimensional Source Flows in Exact Containment Geometry..... 3A.B-1

3A.C Concept of Drag Forces Due to Hydrodynamic Flow Fields..... 3A.C-1

3A.D Calculation Models for Short-Term Loss-of-Coolant Accident Phenomena..... 3A.D-1

3A.E Suppression Pool Temperature Monitoring System..... 3A.E-1

3A.F Computer Programs..... 3A.F-1

3A.G Not Used

3A.H Conformance of CGS Design to NRC Acceptance Criteria..... 3A.H-1

3A.I Safety/Relief Valve and Loss-of-Coolant Accident Loads on Submerged Structures..... 3A.I-1

Appendix 3A

PLANT DESIGN ASSESSMENT REPORT FOR SAFETY/RELIEF VALVES AND LOSS-OF-COOLANT ACCIDENT LOADS

LIST OF TABLES

Section	Title	Page
3A.2.2-1	Suppression Pool Assessment Summary	3A.2.2-3
3A.3.1-1	Summary of Safety/Relief System Characteristics	3A.3.1-9
3A.3.2-1	Summary of Loss-of-Coolant Accident Affected Structures	3A.3.2-23
3A.3.2-2	CGS Data for Loss-of-Coolant Accident Water Jet Analysis	3A.3.2-24
3A.3.2-3	CGS Data for Vent Clearing and Pool Swell Analysis	3A.3.2-25
3A.3.2-4	Results from Loss-of-Coolant Accident Bubble Charging Analysis for CGS	3A.3.2-26
3A.3.2-5	CGS Drywell Pressure as a Function of Time for Loss-of-Coolant Accident (Effects of Pipe Inventory and Subcooling Included)	3A.3.2-27
3A.3.2-6	Results of Pool Swell Analysis for CGS	3A.3.2-28
3A.3.2-7	CGS Plant Parameters for Loss-of-Coolant Accident Transient Analysis	3A.3.2-29
3A.3.2-8	Short-Term Loss-of-Coolant Accident Loads on Structures Below El. 454.4 ft	3A.3.2-30
3A.3.2-9	Short-Term Loss-of-Coolant Accident Loads on Structures between El. 454 ft 4.75 in. and 484 ft 4.75 in.	3A.3.2-32
3A.3.3-1	Summary of Hydrodynamic Loads on Wetwell Structures	3A.3.3-3
3A.3.5-1	Equivalent Static Loads for Pressure Transients and Loss-of-Coolant Accident Effects	3A.3.5-9

Appendix 3A

PLANT DESIGN ASSESSMENT REPORT FOR SAFETY/RELIEF VALVES AND LOSS-OF-COOLANT ACCIDENT LOADS

LIST OF TABLES (Continued)

Section	Title	Page
3A.3.5-2	Acceptance Criteria for Containment Vessel Allowable Stress Limits	3A.3.5-10
3A.3.5-3	Load Combinations - Reinforced-Concrete Structures	3A.3.5-11
3A.3.5-4	Load Combinations - Steel Structures	3A.3.5-12
3A.3.5-5	Load Combinations and Acceptance Criteria for ASME Code Class 1, 2, and 3 Balance-of-Plant Piping and Equipment	3A.3.5-13
3A.4.1-1	Basemat - Stress Resultants at Critical Sections	3A.4.1-21
3A.4.1-2	Pedestal - Stress Resultants at Base	3A.4.1-22
3A.4.1-3	Equivalent Stress Cycles for Fatigue Evaluation	3A.4.1-23
3A.4.1-4	Summary of Stress Intensities for Diaphragm Floor Seal	3A.4.1-24
3A.4.1-5	Cummulative Usage Factor Calculation for Diaphragm Floor Seal	3A.4.1-25
3A.4.2-1	Downcomer Bracing System Controlling Design Margins	3A.4.2-27
3A.4.2-2	Controlling Stress Resultants in Column	3A.4.2-28
3A.4.2-3	Results Summary - Safety/Relief Valve Quencher	3A.4.2-29
3A.4.2-4	Cummulative Usage Factor Calculation at 24 in. Downcomer Anchor	3A.4.2-30
3A.4.2-5	Cummulative Usage Factor Calculation at 28 in. Downcomer Anchor	3A.4.2-31
3A.4.2-6	Maximum Usage Factors Table	3A.4.2-32

Appendix 3A

PLANT DESIGN ASSESSMENT REPORT FOR SAFETY/RELIEF VALVES AND LOSS-OF-COOLANT ACCIDENT LOADS

LIST OF TABLES (Continued)

Section	Title	Page
3A.4.3-1	Miscellaneous Wetwell Piping	3A.4.3-3
3A.4.3-2	Piping Zone Versus Loads	3A.4.3-5
3A.4.3-3	Summary of Results and Design Margins for Miscellaneous Wetwell Piping	3A.4.3-6

Appendix 3A

PLANT DESIGN ASSESSMENT REPORT FOR SAFETY/RELIEF VALVES AND LOSS-OF-COOLANT ACCIDENT LOADS

LIST OF FIGURES

Section	Title
3A.2.1-1	Primary and Secondary Containment Structure
3A.2.1-2	*Suppression Pool Composite Plan at El. 435 ft 3 in.*
3A.2.1-3	*Suppression Pool Composite Plan at El. 455 ft 4 in.*
3A.2.1-4	*Suppression Pool Composite Plan at El. 486 ft 8 in.*
3A.2.1-5	*Suppression Pool Composite Plan at El. 494 ft 5-1/4 in.*
3A.2.1-6	*Suppression Pool Composite Sections "1-1" and "2-2"*
3A.2.1-7	*Suppression Pool Composite Sections "3-3" and "4-4"*
3A.2.1-8	*Suppression Pool Composite Sections "5-5" and "6-6"*
3A.2.1-9	Containment Vessel Developed Elevation
3A.3.1-1	Normalized Design Circumferential Distribution of Pool Boundary Pressures at Containment
3A.3.1-2	Normalized Design Vertical Distribution of Pool Boundary Pressures at Containment
3A.3.1-3	MFP Design Wave Form (Normalized) Time History
3A.3.1-4	MFP Design Wave Form (Normalized) Amplitude of Frequency Spectrum
3A.3.1-5	SFP Design Wave Form (Normalized) Time History
3A.3.1-6	SFP Design Wave Form (Normalized) Amplitude of Frequency Spectrum
3A.3.1-7	SRV Air Clearing Load Distribution on a Downcomer

Appendix 3A

PLANT DESIGN ASSESSMENT REPORT FOR SAFETY/RELIEF VALVES AND LOSS-OF-COOLANT ACCIDENT LOADS

LIST OF FIGURES (Continued)

Section	Title
3A.3.1-8	SRV Air Clearing Load Distribution on a Concrete Column
3A.3.1-9	SRV Air Clearing Load Distribution on an SRV Discharge Line and Quencher Support
3A.3.1-10	Dynamic Load Factor Versus Frequency to be Used for Defining SRV Load on Submerged Structures
3A.3.1-11a	SRV Air Clearing Load Distribution on Piping, Supports, and Bracing Truss
3A.3.1-11b	SRV Air Clearing Load Distribution on Piping, Supports, and Bracing Truss
3A.3.2-1	Short Term Hydrodynamic Processes Associated with a LOCA
3A.3.2-2	Downcomer Vent Water Clearing Velocity Versus Time
3A.3.2-3	Downcomer Vent Water Clearing Acceleration Versus Time
3A.3.2-4	LOCA Bubble Charging Radial Component of $\nabla\Phi$ in Radial Plane Containing Downcomers
3A.3.2-5	LOCA Bubble Charging Tangential Component of $\nabla\Phi$ in Vertical Cylindrical Surface Through Middle Downcomers
3A.3.2-6	LOCA Bubble Charging Vertical Component of $\nabla\Phi$ in Radial Plane Containing Downcomers
3A.3.2-7	LOCA Bubble Radius and Source Strength Time Histories by PSAM Method
3A.3.2-8	Pool Swell Water Slug Velocity Versus Time
3A.3.2-9	Pool Swell Water Slug Acceleration Versus Time
3A.3.2-10	Pool Swell Water Slug Elevation (Top Surface) Versus Time

Appendix 3A

PLANT DESIGN ASSESSMENT REPORT FOR SAFETY/RELIEF VALVES AND LOSS-OF-COOLANT ACCIDENT LOADS

LIST OF FIGURES (Continued)

Section	Title
3A.3.2-11	Pool Swell Air Bubble Pressure Versus Time
3A.3.2-12	Pool Swell Wetwell Air Pressure Versus Time
3A.3.2-13	Pool Swell Water Slug Velocity Versus Elevation of Slug Top Surface
3A.3.2-14	Fallback Water Slug Velocity Versus Elevation of Water Slug Top Surface
3A.3.2-15	LOCA Boundary Load Duration
3A.3.2-16	LOCA Boundary Load Distribution During Vent Clearing
3A.3.2-17	LOCA Boundary Load Distribution During Pool Swell
3A.3.2-18	Distribution of Short Term LOCA Loads on Structures Below El. 454.4 ft
3A.3.2-19	Pressure Gradients Across Submerged Structures Due to Chugging
3A.3.2-20	Large Recirculation Line Break - Pressure Response - Minimum ECCS
3A.3.2-21	Containment Pressure Response for Large Recirculation Line Break - Cases A, B, and C
3A.3.2-22	Large Recirculation Line Break - Temperature Response
3A.3.2-23	Drywell Temperature Response for Large Recirculation Line Break - Cases A, B, and C
3A.3.2-24	Suppression Pool Temperature Response for Large Recirculation Line Break - Long Term Response
3A.3.2-25	Pressure Response Main Steam Line Break

Appendix 3A

PLANT DESIGN ASSESSMENT REPORT FOR SAFETY/RELIEF VALVES AND LOSS-OF-COOLANT ACCIDENT LOADS

LIST OF FIGURES (Continued)

Section	Title
3A.3.2-26	Temperature Response - Main Steam Line Break - Minimum ECCS
3A.3.2-27	Temperature Response - Recirculation Line Break (0.1 ft^2)
3A.3.2-28	Pressure Response - Recirculation Line Break (0.1 ft^2)
3A.4.1-1	Stiffened Containment in Wetwell Region
3A.4.1-2	Displacement Profile SRV Load - All Valves
3A.4.1-3	Displacement Profile Nearly Symmetric Chugging
3A.4.1-4	Stiffener Configuration
3A.4.1-5	Basemat Plan and Sections
3A.4.1-6	Reactor Building Cross Section
3A.4.1-7	Reactor Pedestal, Diaphragm Floor, and Columns
3A.4.1-8	Pedestal-Interaction Diagram Axial Load Versus Moment
3A.4.1-9	Drywell Diaphragm Floor Seal
3A.4.1.10	Finite Element Model Diaphragm Floor Seal
3A.4.2-1	Downcomer Bracing System - Plan and Details
3A.4.2-2	Downcomer Bracing System - Model for Structural Analysis
3A.4.2-3	Diaphragm Floor Columns and Adjoining Structures
3A.4.2-4	Diaphragm Floor Column Model for Dynamic Analysis

Appendix 3A

PLANT DESIGN ASSESSMENT REPORT FOR SAFETY/RELIEF VALVES AND LOSS-OF-COOLANT ACCIDENT LOADS

LIST OF FIGURES (Continued)

Section	Title
3A.4.2-5	Structural Model of Diaphragm Floor Beam and Column
3A.4.2-6	SRV Piping System Inner Ring Quencher Support
3A.4.2-7	Quencher Assembly
3A.4.2-8	SRV Quencher Assembly
3A.4.3-1	Hydrodynamic Loading Zones
3A.5.1-1a	Axisymmetric Model of the Reactor Building and Soil Foundation
3A.5.1-1b	Reactor Building Model
3A.5.1-2	Containment Shell Model Cross-Section Details
3A.5.1-3a	Top of RPV Pedestal, El. 520 ft Mass No. 44 (Radial)
3A.5.1-3b	Top of RPV Pedestal, El. 520 ft Mass No. 44 (Radial)
3A.5.1-4a	Top of RPV Pedestal, El. 520 ft Mass No. 44 (Vertical)
3A.5.1-4b	Top of RPV Pedestal, El. 520 ft Mass No. 44 (Vertical)
3A.5.1-5a	Basemat at RPV Pedestal, El. 435 ft Mass No. 141 Radial)
3A.5.1-5b	Basemat at RPV Pedestal, El. 435 ft Mass No. 141 (Radial)
3A.5.1-6a	Basemat at RPV Pedestal, El. 435 ft Mass No. 141 (Vertical)
3A.5.1-6b	Basemat at RPV Pedestal, El. 435 ft Mass No. 141 (Vertical)
3A.5.1-7a	Top of Sacrificial Shield Wall, El. 567 ft Mass No. 14 (Radial)

Appendix 3A

PLANT DESIGN ASSESSMENT REPORT FOR SAFETY/RELIEF VALVES AND LOSS-OF-COOLANT ACCIDENT LOADS

LIST OF FIGURES (Continued)

Section	Title
3A.5.1-7b	Top of Sacrificial Shield Wall, El. 567 ft Mass No. 14 (Radial)
3A.5.1-8a	Top of Sacrificial Shield Wall, El. 567 ft Mass No. 14 (Vertical)
3A.5.1-8b	Top of Sacrificial Shield Wall, El. 567 ft Mass No. 14 (Vertical)
3A.5.1-9a	RPV, El. 545 ft Mass No. 27 (Radial)
3A.5.1-9b	RPV, El. 545 ft Mass No. 27 (Radial)
3A.5.1-10a	RPV, El. 545 ft Mass No. 27 (Vertical)
3A.5.1-10b	RPV, El. 545 ft Mass No. 27 (Vertical)
3A.5.1-11a	Containment Vessel, El. 547 ft Mass No. 60600 (Radial)
3A.5.1-11b	Containment Vessel, El. 547 ft Mass No. 60600 (Radial)
3A.5.1-12a	Containment Vessel, El. 547 ft Mass No. 60600 (Vertical)
3A.5.1-12b	Containment Vessel, El. 547 ft Mass No. 60600 (Vertical)
3A.5.1-13a	Containment Vessel, El. 448 ft Mass No. 50100 (Radial)
3A.5.1-13b	Containment Vessel, El. 448 ft Mass No. 50100 (Radial)
3A.5.1-14a	Containment Vessel, El. 448 ft Mass No. 50100 (Vertical)
3A.5.1-14b	Containment Vessel, El. 448 ft Mass No. 50100 (Vertical)
3A.5.1-15a	Top of RPV Pedestal, El. 520 ft Mass No. 44 (Radial)
3A.5.1-15b	Top of RPV Pedestal, El. 520 ft Mass No. 44 (Radial)

Appendix 3A

PLANT DESIGN ASSESSMENT REPORT FOR SAFETY/RELIEF VALVES AND LOSS-OF-COOLANT ACCIDENT LOADS

LIST OF FIGURES (Continued)

Section	Title
3A.5.1-16a	Top of RPV Pedestal, El. 520 ft Mass No. 44 (Vertical)
3A.5.1-16b	Top of RPV Pedestal, El. 520 ft Mass No. 44 (Vertical)
3A.5.1-17a	Basemat at RPV Pedestal, El. 435 ft Mass No. 141 (Radial)
3A.5.1-17b	Basemat at RPV Pedestal, El. 435 ft Mass No. 141 (Radial)
3A.5.1-18a	Basemat at RPV Pedestal, El. 435 ft Mass No. 141 (Vertical)
3A.5.1-18b	Basemat at RPV Pedestal, El. 435 ft Mass No. 141 (Vertical)
3A.5.1-19a	Top of Sacrificial Shield Wall, El. 567 ft Mass No. 14 (Radial)
3A.5.1-19b	Top of Sacrificial Shield Wall, El. 567 ft Mass No. 14 (Radial)
3A.5.1-20a	Top of Sacrificial Shield Wall, El. 567 ft Mass No. 14 (Vertical)
3A.5.1-20b	Top of Sacrificial Shield Wall, El. 567 ft Mass No. 14 (Vertical)
3A.5.1-21a	RPV, El. 545 ft Mass No. 27 (Radial)
3A.5.1-21b	RPV, El. 545 ft Mass No. 27 (Radial)
3A.5.1-22a	RPV, El. 545 ft Mass No. 27 (Vertical)
3A.5.1-22b	RPV, El. 545 ft Mass No. 27 (Vertical)
3A.5.1-23a	Containment Vessel, El. 547 ft Mass No. 60600 (Radial)
3A.5.1-23b	Containment Vessel, El. 547 ft Mass No. 60600 (Radial)
3A.5.1-24a	Containment Vessel, El. 547 ft Mass No. 60600 (Vertical)

Appendix 3A

PLANT DESIGN ASSESSMENT REPORT FOR SAFETY/RELIEF VALVES AND LOSS-OF-COOLANT ACCIDENT LOADS

LIST OF FIGURES (Continued)

Section	Title
3A.5.1-24b	Containment Vessel, El. 547 ft Mass No. 60600 (Vertical)
3A.5.1-25a	Containment Vessel, El. 448 ft Mass No. 50100 (Radial)
3A.5.1-25b	Containment Vessel, El. 448 ft Mass No. 50100 (Radial)
3A.5.1-26a	Containment Vessel, El. 448 ft Mass No. 50100 (Vertical)
3A.5.1-26b	Containment Vessel, El. 448 ft Mass No. 50100 (Vertical)
3A.5.2-1	Reactor Building Model
3A.5.2-2	Containment Vessel, El. 448 ft Mass No. 152 (Radial)
3A.5.2-3	Containment Vessel, El. 448 ft Mass No. 152 (Vertical)
3A.5.2-4	Containment Vessel, El. 459 ft Mass No. 123 (Radial)
3A.5.2-5	Containment Vessel, El. 459 ft Mass No. 123 (Vertical)
3A.5.2-6	RPV Support on Pedestal, El. 519 ft Mass No. 57 (Radial)
3A.5.2-7	RPV Support on Pedestal, El. 519 ft Mass No. 57 (Vertical)
3A.5.2-8	Containment Vessel, El. 583 ft Mass No. 12 (Radial)
3A.5.2-9	Building Wall, El. 521 ft Mass No. 55 (Radial)
3A.5.2-10	Building Wall, El. 521 ft Mass No. 55 (Vertical)

Appendix 3A

PLANT DESIGN ASSESSMENT REPORT FOR SAFETY/RELIEF VALVES AND LOSS-OF-COOLANT ACCIDENT LOADS

This third revision of the "Plant Design Assessment Report," (DAR) together with the safety/relief valve (SRV), condensation oscillation and chugging reports, finalizes the Columbia Generating Station load definition, load application, load combination, and design margins for hydrodynamic loading conditions.

In July 1993 Energy Northwest requested an amendment to the operating license to allow an increase in the power level of the plant. The effects of power uprate on the containment system response are described in NEDC-32141-P. Specifically, Section 4.1 of NEDC-32141-P states that for short-term containment pressure response, the peak pressure values are below design values and remain virtually unaffected by power uprate and extended load line limit. The loss-of-coolant accident (LOCA) containment dynamic loads are not affected by power uprate, and SRV containment loads will remain below their design allowables. Appendix 3A has not been updated to reflect the minor changes to the LOCA and SRV load analyses described in NEDC-32141-P or the additional minor changes due to evaluations for Maximum Extended Load Line Limit Analysis (MELLLA).

3A.1.1 CONFORMANCE TO NRC ACCEPTANCE CRITERIA

The DAR specifies the Columbia Generating Station position for each of the pool dynamic loads. The table further provides a detailed description of each load, the NRC evaluation, and the Columbia Generating Station position on the acceptance for each load. The Columbia Generating Station positions (Attachment 3A.H) were discussed, reviewed, and approved by NRC at various meetings with Energy Northwest. The NRC acceptance was formalized in the Columbia Generating Station Safety Evaluation Report (SER).

3A.1.2 ROLE OF THE DESIGN ASSESSMENT REPORT

The Columbia Generating Station DAR serves the primary purpose of assessing the adequacy of structures and equipment affected during SRV actuation or a postulated LOCA. This report utilizes the load definition data from the SRV report, chugging report, DFFR (Reference 3A.3.2-2), and applicable NRC guidelines as outlined in Attachment 3A.H.

Specifically Revision 3 of the DAR serves the following purposes:

a. Summarize the loads and effects agreed upon with NRC which are most important to the design of the plant,

b. Identify the design modifications implemented to withstand these loads, and

c. Identify the design margins for hydrodynamic loading conditions.

3A.1.3 ASSESSMENT APPROACH

The information developed in the SRV and Chugging Reports (References 3A.3.1-1 and 3A.3.2-15 respectively) together with other information available as outlined in Attachment 3A.H, was used to assess all major structures, systems, and components in the wetwell region. The effects of hydrodynamic loads outside the wetwell region are discussed in the appropriate sections of the FSAR.

3A.1.4 SUMMARY OF DESIGN ASSESSMENT REPORT CONTENT

The DAR, Revision 3 is summarized as follows:

Chapter 1

a. Introduction to CGS Loads,
b. Review of the purpose of the plant specific loads, and
c. Discussion of the assessment of containment components since DAR Revision 2.

Chapter 2

a. General description of the CGS containment, and
b. Summary and conclusions.

Chapter 3

A discussion of the manner in which the plant specific loads for CGS are determined, based on information provided in the SRV and chugging reports, DFFR, and other associated and referenced documents.

Chapter 4

A review of the design assessment for the CGS containment system. Assessment and conclusions are included for suppression pool boundary structures (steel containment, vertical and horizontal tees, basemat, pedestal, diaphragm floor, and diaphragm floor seal) and for suppression pool major structures (downcomer bracing, columns, downcomers, SRV piping systems, quenchers, and platforms), and for suppression pool miscellaneous piping systems.

Chapter 5

Provides the building response due to SRV discharge, LOCA.

Attachments

The attachments to this report provide

a. Attachment not utilized,

b. Theoretical formulation for the calculation of three dimensional source flows in exact containment geometry,

c. A method to calculate drag forces on submerged structures caused by hydrodynamic flow fields,

d. Calculation models for short term LOCA phenomena,

e. Description of the suppression pool temperature monitoring system,

f. Description of computer programs utilized for CGS load definition and plant assessment,

g. Attachment not utilized,

h. Table of conformance of CGS design to NRC acceptance criteria, and

i. Summary of the methodologies used for defining SRV and LOCA loads on submerged structures.

3A.2 SUMMARY AND CONCLUSIONS

3A.2.1 GENERAL DESCRIPTION OF PLANT

The Energy Northwest Nuclear Project No. 2 (CGS) is a nuclear fueled electrical generating station which utilizes a General Electric Company BWR-5 (1969 product line) nuclear reactor.

The primary containment utilizes a Mark II over/under pressure-suppression configuration (see Figure 3A.2.1-1). The primary containment consists of a steel pressure vessel enclosed by a concrete shield wall both supported by a concrete basemat. The primary containment is enclosed by the reactor building, a reinforced-concrete structure functioning as a secondary containment.

The drywell is connected to the suppression chamber by 99 downcomer pipes. Originally 102 downcomer pipes were provided but three were capped, as discussed in Sections 3A.3.2.1 and 3A.3.2.2. Steam that could be released in the drywell during a postulated loss-of-coolant accident (LOCA) is channeled through these downcomer pipes into the suppression pool where it is condensed thus effecting pressure-suppression.

Eighteen safety/relief valves (SRVs) are mounted on the four main steam lines. When SRVs are actuated, steam from the reactor pressure vessel (RPV) flows through the SRV discharge lines into the suppression pool where the steam is condensed. The discharge lines from all 18 SRVs are routed inside selected downcomers into the suppression chamber *(Figures 3A.2.1-6 through 3A.2.1-8)*. Each discharge line terminates with a quencher device having four arms. Seven of the 18 SRVs are part of the automatic depressurization system (ADS) (Table 3A.3.1-1) which is designed to function, under certain conditions, following a postulated intermediate or small size line break.

3A.2.1.1 Structures, Piping, and Components Directly Affected by Pool Dynamic Loads

The structures in the suppression chamber are shown in *Figures 3A.2.1-2 through 3A.2.1-8.* The structures, piping and components directly affected by the hydrodynamic events associated with the LOCA pressure suppression and the SRV discharge are identified below. The applicable hydrodynamic loads are identified in Section 3A.4.

a. Boundary elements

The suppression chamber boundary elements are: the steel containment including the vertical and horizontal tee stiffeners (Figure 3A.4.1-4), the concrete basemat, the concrete pedestal, the diaphragm floor and the diaphragm floor seal;

b. Major structures and components

The major vertical structures are shown in *Figure 3A.2.1-2*. They are the 102 downcomers, the 18 SRV lines including quenchers and support towers, and the 17 concrete columns supporting the diaphragm floor. The major horizontal structures are the steel truss shown in *Figure 3A.2.1-3* which provides lateral support to the downcomers and the SRV lines, and the platform at el. 472 ft 4 in. shown in Figures *3A.2.1-3 and 3A.2.1-8*. The downcomer bracing truss is submerged and the platform is located in the pool swell zone; and

c. Miscellaneous piping systems

A developed elevation of the CGS containment showing the location of the containment penetrations is shown in Figure 3A.2.1-9. The piping systems of the suppression pool are classified as described below.

1. Fully submerged piping systems

Eleven piping systems are fully submerged in the suppression pool *(see Figure 3A.2.1-2)*. Seven systems enter the pool through containment penetrations at el. 452 ft 0 in. One pipe [4 in.-fuel pool cooling and cleanup (FPC)] enters the pool through the pedestal at el. 451 ft 8.25 in. Two short lengths of pipe (instrumentation stubs) enter the pool at el. 462 ft 0 in. A third (instrumentation line) enters at el. 455 ft 0 in. Pipes below the downcomer vent exit at el. 454 ft 4.75 in.

2. Partially submerged piping systems

Thirteen partially submerged piping systems enter the suppression chamber through containment penetrations at el. 467 ft 9 in. *(see Figure 3A.2.1-3)* and enter the pool vertically within 3 ft 0 in. distance from the containment as shown in *Figures 3A.2.1-6 through 3A.2.1-8*.

3. Piping systems in pool swell zone

The pool swell zone is identified in Section 3A.3.2.3 to be between the elevations of the initial pool surface (466 ft 4.75 in.) and the maximum pool rise during a LOCA (design basis accident) (484 ft 4.75 in.).

Piping systems in the pool swell zone include short projections into the chamber from the containment at one access hatch and 10 miscellaneous piping systems as shown in *Figure 3A.2.1-3 and Figures 3A.2.1-6 through 3A.2.1-8.*

4. Piping systems above the pool swell zone

   Piping systems above the pool swell zone include short lengths of pipe entering at el. 491 ft 0 in. and two penetrations for the wetwell spray header also at el. 491 ft 0 in. as shown in *Figure 3A.2.1-4 and Figures 3A.2.1-6 through 3A.2.1-8.*

3A.2.1.2 Structures, Piping, and Components Indirectly Affected by Pool Dynamic Loads

In the drywell region the containment structures, piping, and components are also affected by pool dynamic loads. This is a result of loading applied to the suppression chamber boundary (basemat, pedestal, and containment shell) which would result in vibratory motion transmitted through the reactor pedestal and the primary containment. This is commonly referred to as "building response."

3A.2.2 SUMMARY OF CHANGES AND CONCLUSIONS

3A.2.2.1 Summary of Changes to Preserve Design Margins

Structures, piping, and components which were affected by pool dynamic loads were divided into two general categories, i.e., those directly affected by pool dynamic loads (those in and bounded by the suppression chamber) and those affected only indirectly by pool dynamic loads (outside the suppression chamber). The Design Assessment Report (DAR) addressed the structures, piping, and components in and bounding the suppression chamber. For these structures several changes in design were implemented as a result of consideration of SRV discharge and LOCA hydrodynamic loads. Table 3A.2.2-1 provides a list of the structures and components that were impacted by the DAR and includes the design margins, controlling load combination, and the design changes that have been made. The steel containment structure has been reinforced by the addition of seven horizontal rows of tee stiffeners as shown in Figure 3A.4.1-1. The downcomer bracing system has been redesigned from a system of radial beams to a pipe truss system. This bracing system also is designed to provide lateral restraint for the SRV discharge pipes. Quenchers have been provided as exit devices for the SRV discharge pipes. Additions and modifications of pipe supports for miscellaneous piping systems have been provided. Other miscellaneous changes are noted in Table 3A.2.2-1.

3A.2.2.2 Conclusions

The DAR, Revision 3 concluded that the modified design of the wetwell for CGS is capable of withstanding the effects of the hydrodynamic loads resulting from SRV actuation and postulated LOCA events in conjunction with other applicable loads.

The effects due to hydrodynamic loads outside the wetwell region are discussed in the FSAR.

Table 3A.2.2-1

Suppression Pool Assessment Summary

Structure	Controlling Margin[a]	Controlling Load Combination[b]	Changes to Structures Due to SRV and LOCA Loads
Steel containment	1.26	3	Added horizontal tee stiffeners, revised platform location, and connection to containment.
Basemat	Bending - 1.14 Shear - 1.27	7	None
Pedestal diaphragm floor	1.11 Downward - 1.62 Uplift - 1.27	4 4a	None None
Diaphragm floor seal	See Section 3A.4.1.5.5	See Section 3A.4.1.5	None
Downcomer	1.68	5	Redesigned bracing system as a pipe truss system
Columns	1.19	1	None
Downcomers	1.08	See Section 3A.4.2.3	Added stainless-steel spool piece, provided local reinforcement where SRV pipe penetrates downcomer, raised the vacuum breaker valves out of the pool swell zone. Capped three downcomers.
SRV piping systems	1.05	See Section 3A.4.2.4	Provided lateral restraint at downcomer bracing system, rerouted SRV lines.
Quenchers	1.25	See Table 3A.4.2-3	Added quencher device and support to the end of SRV lines

Table 3A.2.2-1

Suppression Pool Assessment Summary (Continued)

Structure	Controlling Margin[a]	Controlling Load Combination[a]	Changes to Structures Due to SRV and LOCA Loads
Platforms and ladders	1.18	5a	Removed floor plate, replaced with grating, revised locations and connections to containment, added platform supports to service vacuum breaker valves; strengthened grating connections and supports.
Miscellaneous wetwell piping system	See Section 4.3	See Section 3A.4.3	Added and modified pipe supports. Stiffened penetrations. Relocated two piping systems.

[a] See Section 3A.4 for a complete discussion.
[b] See Section 3A.3.5 for a complete discussion.

3A.3 CONTAINMENT DYNAMIC FORCING FUNCTIONS

3A.3.1 LOADS ASSOCIATED WITH SAFETY/RELIEF VALVE ACTUATION

3A.3.1.1 Description of the Safety/Relief System

The safety/relief system is comprised of 18 safety/relief valves (SRVs) connected to the main steam lines in the drywell chamber. From each of the valves, a discharge line with two vacuum breakers is routed from the drywell into the wetwell where it terminates in a quencher in the suppression pool, as shown in *Figures 3A.2.1-3 to 3A.2.1-8*. To pass through the drywell floor, the discharge lines are routed through selected downcomers to about el. 490 ft. At this elevation, they exit the downcomers and are routed horizontally, as shown in *Figure 3A.2.1-4*, to points directly above their respective quenchers. They then are routed vertically down into the suppression pool, as shown in *Figures 3A.2.1-6 to 3A.2.1-8*. Under normal operating conditions, each quencher is filled with water and its discharge line is filled to the same level as the surface of the suppression pool. The remaining volume of the discharge line up to the SRV is filled with air. Table 3A.3.1-1 summarizes the characteristics of the safety/relief system.

3A.3.1.2 Description of the Phenomena and Resulting Loads

During plant operation, if one or more of the SRVs is actuated, three transient events occur consecutively for each:

a. The water in each quencher and discharge line is expelled into the suppression pool through the holes in the quencher arms,

b. The air which fills each discharge line is expelled into the suppression pool, and

c. The steam from the discharge line being vented is expelled into the suppression pool and condensed.

Each of these events creates disturbances in the suppression pool. The first creates water jets, the second creates air discharge related pressure oscillations and the third creates pressure fluctuations as the steam is condensed. These disturbances, in turn, produce hydrodynamic loads both on the structures which are submerged in the suppression pool and on the pool boundaries. Sections 3A.3.1.2.1, 3A.3.1.2.2, and 3A.3.1.2.3 briefly describe the characteristics of the load producing phenomena, while Section 3A.3.1.3 discusses the loads produced.

3A.3.1.2.1 Water Clearing Loads

When an SRV opens and permits steam to pass, the steam flow compresses the air above the water standing in the discharge line increasing the line pressure. The increased air pressure forces the water into the suppression pool through the holes in each side of the quencher arms. As the water flows from the adjacent sides of the quencher arms, it coalesces into four turbulent jets. These jets flow away from the quencher producing acceleration and standard drag loads on structures in their paths. Due to the turbulent nature of the jets, their momentum diffuses rapidly and their effective velocity decreases to zero in a distance comparable to a quencher arm length.

Based on the results of scaled experiments and Caorso test results (Reference 3A.3.1-3), the region throughout which the jets produce a significant load is small, at most existing to a distance comparable to a quencher arm length. There are no structures located in this region except a small intrusion of the concrete column which is designed for significantly higher air clearing loads. Detailed definition of water clearing loads therefore is unnecessary for the purposes of this report. It is noted that a clear demarcation between the water clearing loads and air clearing loads is not possible from the recorded Caorso test data. For the purpose of this report it is assumed that significant pressure peaks represent air clearing loads and that the slowly rising pressure before the first significant peak represents water clearing loads.

3A.3.1.2.2 Air Clearing Loads

Following the expulsion of water from the SRV discharge line, the air trapped in the line is forced through the holes in the sides of the quencher arms into the suppression pool. As a result of this disturbance of the pool, oscillations are produced in the pool which induce time varying pressure and velocity fields. These fields create acceleration drag loads on the submerged structures and time varying loads on the pool boundaries. The definition of these air clearing loads is provided in Section 3A.3.1.3.

3A.3.1.2.3 Steam Condensation Loads

After the water and air have been expelled from the SRV discharge line, high pressure, high temperature, high mass flux steam is discharged into the suppression pool. As the steam condenses and collapses, vibrations or small pressure fluctuations are produced in the water. Suppression pool temperature transient analyses were performed for CGS, for a stuck open relief valve, isolation scram, and small break accident (SBA), in accordance with the requirements of NUREG-0783. The peak pool temperature for each of these cases is maintained within the limits of NUREG-0783. As a result unstable steam condensation due to extended SRV discharge to the suppression pool will not occur. Details of this analysis are provided in Reference 3A.3.1-7. The suppression pool temperature monitoring system is discussed in FSAR Appendix 3A Attachment 3A.E.

3A.3.1.3 Safety/Relief Valve Air Clearing Loads

Testing and analytical efforts have been performed by the Mark II Owners' Group to define the loads resulting from discharge through a quencher device upon actuation of the SRV. The SRV testing carried out at the Caorso plant in Italy represents the most extensive test program to date with geometry and plant conditions similar to CGS. An analytical effort was undertaken by Burns and Roe to evaluate the data taken during the Caorso Phase I and II tests (References 3A.3.1-3 and 3A.3.1-4) which resulted in an improved SRV load definition and application methodology for Mark II containments (Reference 3A.3.1-1). These results and a detailed description of the analysis have been submitted, reviewed, and approved by the NRC (Reference 3A.3.1-6) as part of the SRV reports (Reference 3A.3.1-1).

Hydrodynamic loads due to an SRV discharge affect both pool boundaries and submerged structures. A summary of the improved load definition for the specific applications is provided in Sections 3A.3.1.3.1 and 3A.3.1.3.2.

3A.3.1.3.1 Boundary Loads

Expulsion of water and air in a discharge line during an SRV discharge creates disturbances in the suppression pool which induce dynamic pressure loads on the pool boundary. Resulting dynamic effects depend upon the definition of a rigid wall pressure incident on this boundary. Analytical interpretations and subsequent definitions of the spatial pressure distribution, pressure wave forms, and maximum pressure amplitudes recorded during the Caorso tests are the basis for defining the design boundary pressure load. Conversion of these Caorso results for application to CGS requires a correlation between the test conditions at Caorso and the design condition at CGS. Reference 3A.3.1-1 details this correlation along with the derivation of the design boundary pressure with regard to all the possible SRV discharge events that may occur during the life of the plant (see 3A.4.1.1.1.1). Sections 3A.3.1.3.1.1, 3A.3.1.3.1.2, and 3A.3.1.3.1.3 summarize the more important aspects of the derivation.

3A.3.1.3.1.1 Spatial Distribution of Boundary Pressures. The spatial distribution of boundary pressures during an SRV discharge contributes to a complete definition of the design boundary pressure load. Based on analytical studies of data recorded at Caorso, it was concluded that the spatial distribution of pressure is independent of the time variable. As stated in Reference 3A.3.1-1, this implies that the maximum pressure amplitude can be representatively used when studying the spatial distributions.

The circumferential pressure distribution (Figure 3A.3.1-1) as well as the vertical pressure distribution (Figure 3A.3.1-2) adopted for the SRV load specification is obtained through comparisons of various available distributions (Reference 3A.3.1-1). It should be noted that both distributions have been normalized for 1 psi peak pressure.

3A.3.1.3.1.2 Pressure Wave Forms. The SRV boundary pressure load specification depends on the evaluation of the pressure wave forms measured during the Caorso tests. Based on the experimental data recorded, two distinct characteristic wave forms prevail, the multiple frequency pressure (MFP) wave form and the single frequency pressure (SFP) wave form.

The design MFP wave form, shown in Figure 3A.3.1-3, reflects the characteristics of all such MFP wave forms measured at Caorso. Initially, there are several pressure spikes as the pressure wave reaches the pool boundary. They exhibit a frequency content in the range of 15.0 Hz to 40 Hz. Following the pressure spikes are damped oscillations exhibiting primarily a single frequency in the range of 6.0 Hz to 10.0 Hz. Maximum pressure amplitude occurs in the initial period and decays rapidly thereafter. Figure 3A.3.1-4 illustrates the frequency spectrum of the pressure amplitude trace indicating rich frequency content in the range of 15.0 Hz to 40.0 Hz and a distinct peak in the range of 6.0 Hz to 10.0 Hz. There is negligible frequency content beyond 40.0 Hz.

The design SFP wave form, shown in Figure 3A.3.1-5, reflects the characteristics of all such SFP wave forms measured at Caorso.

Unlike the MFP wave form, a single characteristic frequency of oscillation predominates for the entire time history. As shown in the corresponding frequency spectrum (Figure 3A.3.1-6), the dominant frequency is in the range of 6.0 Hz to 10.0 Hz. Again, there is negligible frequency content beyond 40.0 Hz.

Due to the randomness and variability in the characteristic/dominant frequencies of the pressure wave forms recorded, the time histories of the design pressure wave forms are compacted and expanded to obtain a characteristic frequency covering the range of 4.0 Hz to 12.0 Hz at intervals of 1.0 Hz. As a result, each type of wave form (MFP and SFP) is depicted by nine separate pressure time histories (see Reference 3A.3.1-1 for details).

3A.3.1.3.1.3 Design Maximum Pressure Amplitude. Conversion of the Caorso maximum pressure amplitude computed for application to CGS yields a design maximum pressure amplitude of 15.0 psi (References 3A.3.1-1 and 3A.3.1-5). This is the rigid wall pressure incident on the suppression pool boundary resulting from an SRV actuation. Application of this design boundary pressure for all SRV discharge cases that may possibly occur during the life of the CGS plant, as specified in the DFFR (Reference 3A.3.1-2), is discussed in Section 3A.4.1.1.1.1. As discussed in Reference 3A.3.1-2, the design pressure reflects a 90% confidence level and 90% probability of nonexceedence.

3A.3.1.3.2 Submerged Structure Loads

The methodology for calculating the loads on submerged structures during SRV discharge uses the predicted pressure time histories directly rather than the velocity and acceleration

transients. The pressure predictions are based on the pressures measured on submerged structures in Caorso tests and their correlation with the boundary pressure loads.

3A.3.1.3.2.1 Peak Safety/Relief Valve Dynamic Loads. The methodology used to define peak SRV dynamic loads on submerged structures is outlined in Attachment 3A.I (see also Reference 3A.3.1-8).

3A.3.1.3.2.2 Time Dependence of Safety/Relief Valve Loads and Dynamic Load Factors. The pressure time histories recorded on submerged structures at Caorso show waveform characteristics similar to those recorded at pool boundary. As indicated in Reference 3A.3.1-1, boundary pressure time histories consist of SFP time histories and MFP time histories.

Dynamic load factor (DLF) versus frequency curves are presented in Figure 3A.3.1-10. A typical curve, such as the curve labeled SFP, 1% damping, was calculated as follows:

a. Response spectra that correspond to all the SFP time histories described in Section 3A.3.1.3.1.2 are computed using 1% damping,

b. The response spectra obtained in (a) are enveloped, and

c. The DLF curve is obtained from the response spectrum envelope by dividing the responses at various frequencies by the zero period response.

3A.3.1.3.2.3 Safety/Relief Valve Loads on Structures. Loads on submerged structures are shown for the submerged structures listed below. Unless otherwise noted, calculation of an equivalent static load is completed via a DLF as obtained from Figure 3A.3.1-10.

a. Downcomers

Figure 3A.3.1-7 shows dynamic load on a downcomer;

b. Columns

Figure 3A.3.1-8 shows dynamic load on a concrete column. Note, for the subsequent actuation load case the maximum direct pressure load is shown (see Reference 3A.3.1-8). Reference 3A.3.1-9 computes the maximum dynamic reaction of the column, and these time-history analyses results are applied in Reference 3A.3.1-10 for final column structural (i.e., code) qualification. Table 3A.4.2-2 tabulates maximum column reaction load results;

c. Safety/relief valve line and quencher supports

Figure 3A.3.1-9 shows dynamic load on SRV line and the quencher support. Horizontal flow past an SRV line due to actuation of its quencher is negligible; and

d. Piping, supports, and bracing truss

Figure 3A.3.1-11 shows equivalent static loads on piping, supports, and bracing truss.

3A.3.1.4 References

3A.3.1-1 "SRV Loads - Improved Definition and Application Methodology for Mark II Containments," Technical Report, Burns and Roe, Inc., July 1980. Transmitted to NRC by letter GO2-80-172, of August 8, 1980.

3A.3.1-2 "Mark II Containment Dynamic Forcing Functions Information Report (DFFR)," General Electric Company, NEDO-21061, Revision 4, November 1981.

3A.3.1-3 "Mark II Containment Supporting Program Caorso SRV Discharge Tests, Phase I Test Report," General Electric Company, NEDE-25100-P, May 1979.

3A.3.1-4 "Mark II Containment Supporting Program Caorso SRV Discharge Tests, Phase II ATR Report," General Electric Company, NEDE-25118.

3A.3.1-5 Letter, GO2-82-35, 1/13/82, "Responses to CSB Open Items 44 through 48," G. D. Bouchey (WPPSS) to A. Schwencer (NRC).

3A.3.1-6 "Safety Evaluation Report Related to the Operation of WPPSS Nuclear Project No. 2," NUREG-0892, Supplement No. 1, USNRC, August 1982.

3A.3.1-7 "Suppression Temperature Analysis," Stone and Webster Report 14057-4 (D-1). Transmitted to NRC by letter GO2-81-524 of December 15, 1981.

3A.3.1-8 Supply System Calculation No. ME-02-93-22, "SRV Air Clearing Loads on Diaphragm Slab Columns."

3A.3.1-9 Supply System Calculation No. CE -02-93-12, "Diaphragm Slab Column Evaluation for SRV Air Clearing Loads."

3A.3.1-10 Burns & Roe Calculation No. 6.19.36, Book SV-830, "Calculation for Reactor Building Diaphragm Floor Column and Plant DAR for Hydrodynamic Loads, Rev. 3."

Table 3A.3.1-1

Summary of Safety/Relief System Characteristics

1.	Number of SRVs	18	
2.	SRV manufacturer	Crosby	P.S.P
3.	Designations of SRVs and pressure setpoints (Refer to *Figure 3A.2.1-2*)	Valves	(psi)
		1B[a], 1C[a]	1165
		1A[a], 2B[a], 2C[a], 1D[a]	1175
		2A, 3B, 3C, 2D	1185
		3A, 4B, 4C, 3D	1195
		4A, 5B, 5C, 4D	1205
4.	Number of automatic depressurization valves [automatic depressurization system (ADS)]	7	
5.	Designations of automatic depressurization valves	MS-RV-3D, 4A, 4B, 4C, 4D, 5B, 5C	
6.	Nominal range of valve opening times (ms)	20-150	
7.	Nominal range of nameplate steam rates (lbm/sec)	236.33-251.81	
8.	Number of vacuum breakers per discharge line	2 (in parallel)	
9.	Size of each vacuum breaker (in.)	10	
10.	Each discharge line pipe sizes (in./schedule)	10/80 expanded to 12/80 at approximate el. 493 ft	
11.	Discharge line rage of lengths to normal water level (ft)	107.99-161.99	
12.	Discharge line range of air volumes to normal water level (ft^3)	57.2-88.1	
13.	Depth of suppression pool at RPV pedestal to normal water level (ft)	31.0	
14.	Submergence of quenchers to high water level (ft)	17.4	

Table 3A.3.1-1

Summary of Safety/Relief System Characteristics (Continued)

15.	Elevation of inner/outer ring quenchers above basemat (ft)	13.6-8.2
16.	Quencher area defined by circumscribed circle (ft^2)	74.6

[a] These valves are the low setpoint valves which are prone to subsequent actuation. However, subsequent actuation may occur (though unlikely) in the higher set pressure SRV groups (see also discussion contained in Reference 3A.3.1-8).

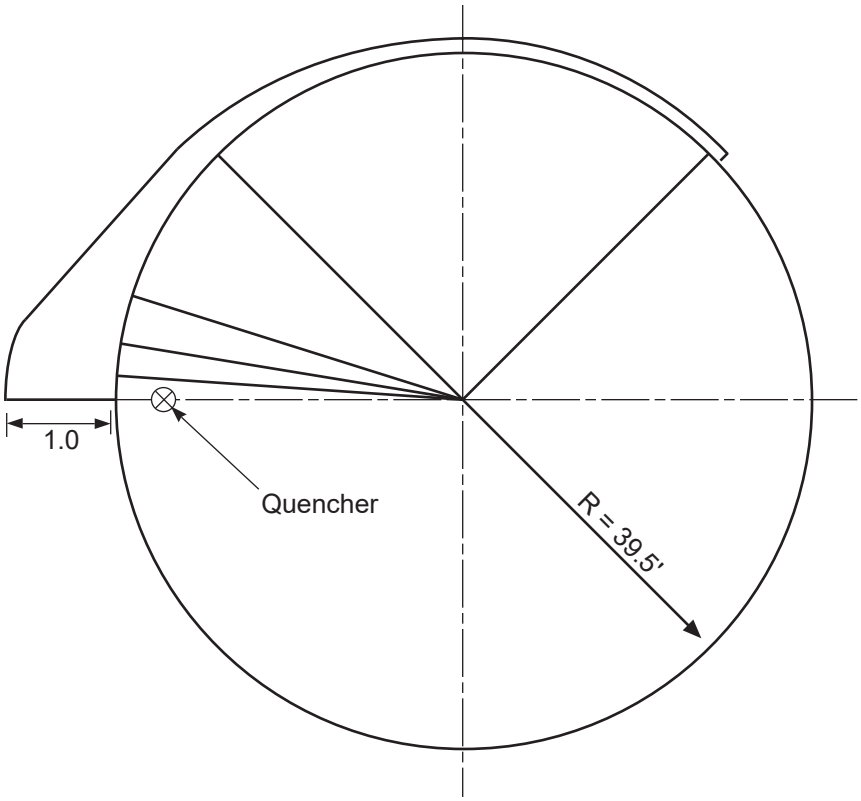

Columbia Generating Station Final Safety Analysis Report	Normalized Design Circumferential Distribution of Pool Boundary Pressures at Containment		
	Draw. No. 950021.64	Rev.	Figure 3A.3.1-1

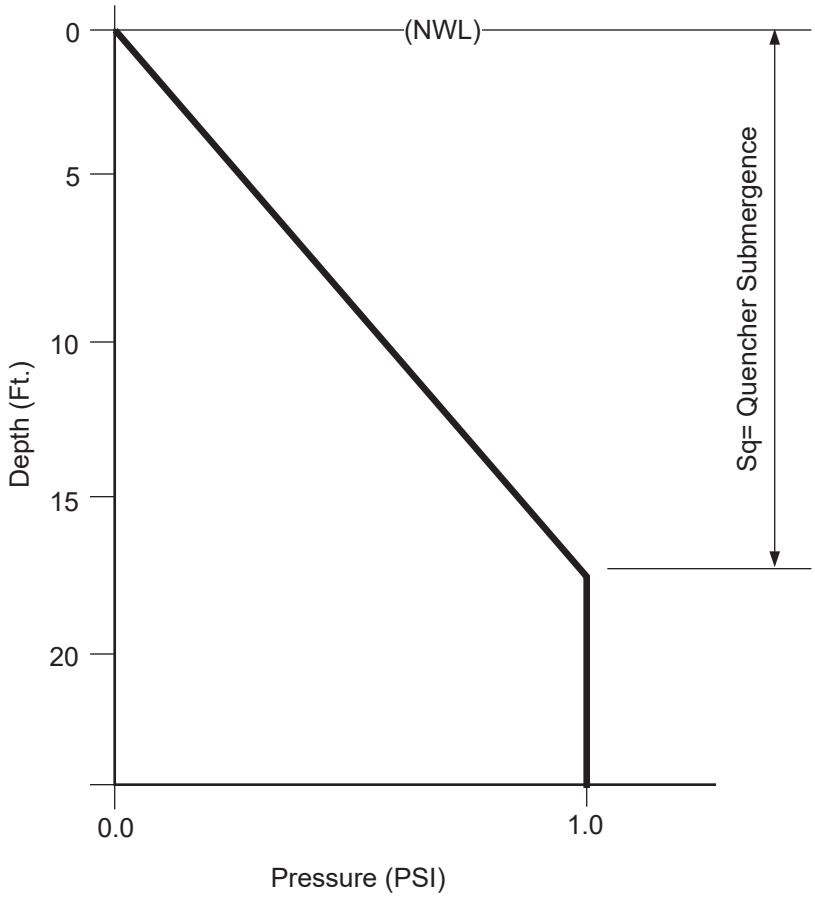

Columbia Generating Station Final Safety Analysis Report	Normalized Design Vertical Distribution of Pool Boundary Pressures at Containment		
	Draw. No. 950021.65	Rev.	Figure 3A.3.1-2

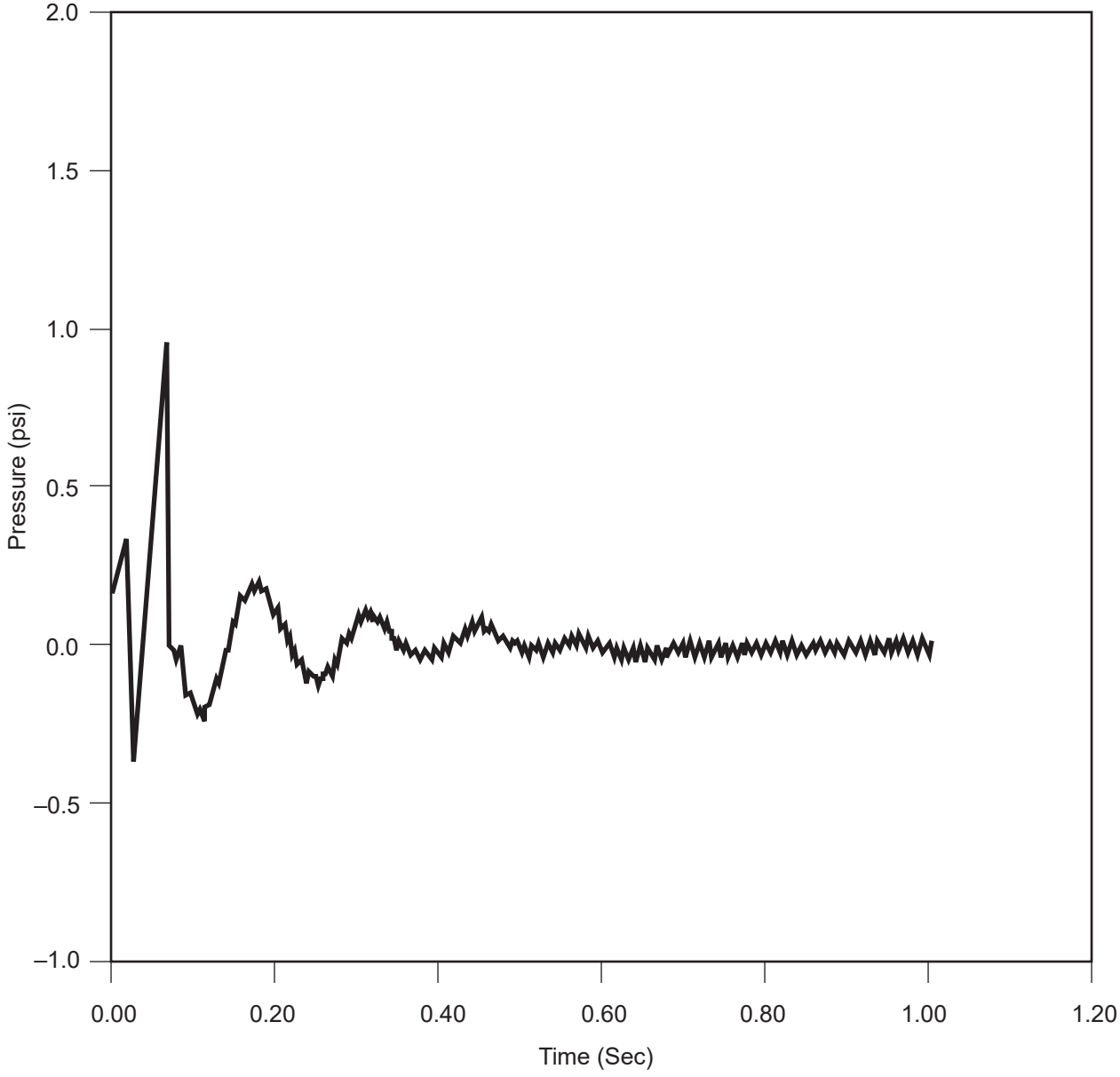

Columbia Generating Station **Final Safety Analysis Report**	**MFP Design Wave Form (Normalized) Time History**		
	Draw. No. **950021.66**	Rev.	Figure **3A.3.1-3**

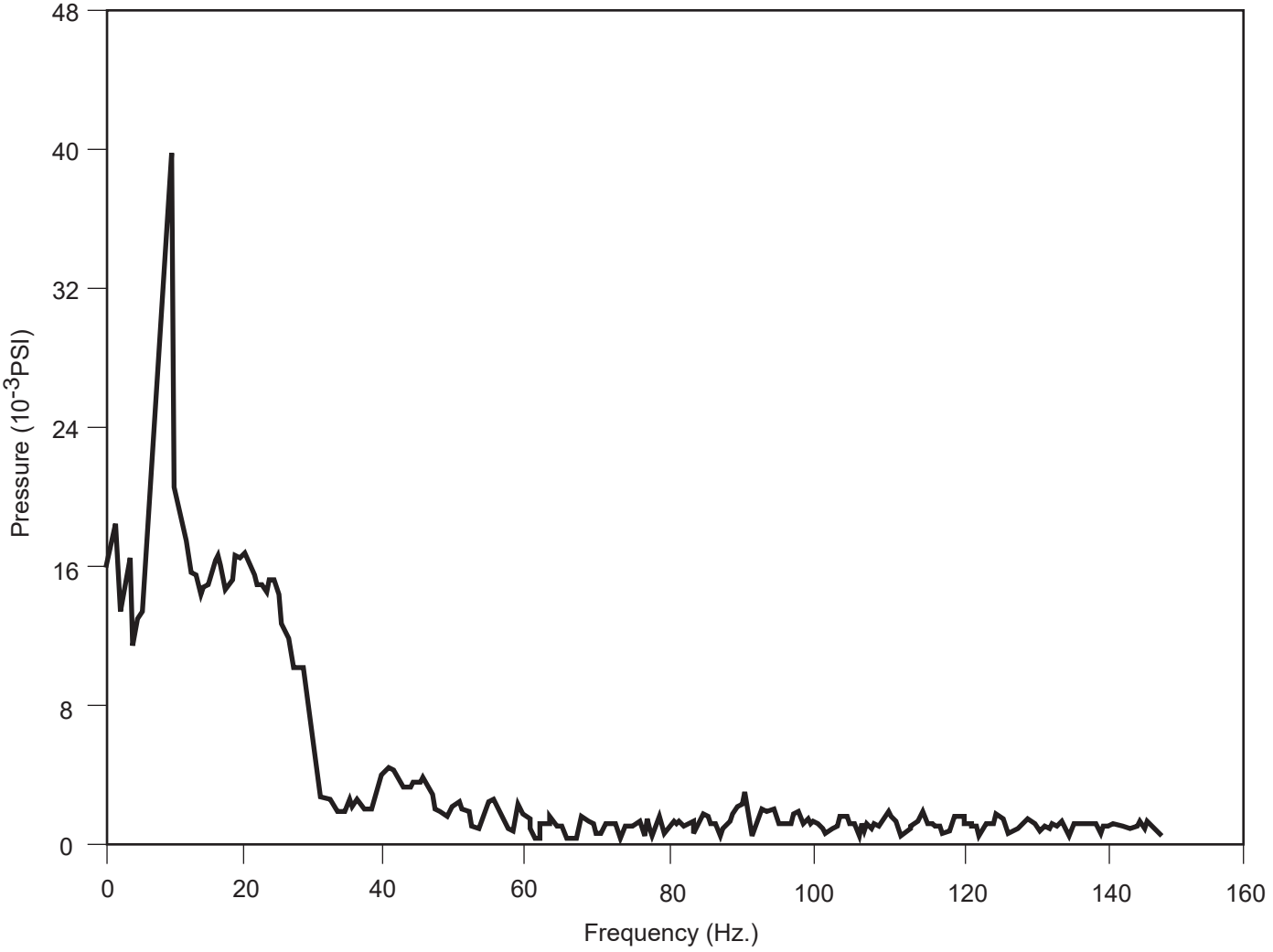

Columbia Generating Station Final Safety Analysis Report	MFP Design Wave Form (Normalized) Amplitude of Frequency Spectrum		
	Draw. No. 950021.67	Rev.	Figure 3A.3.1-4

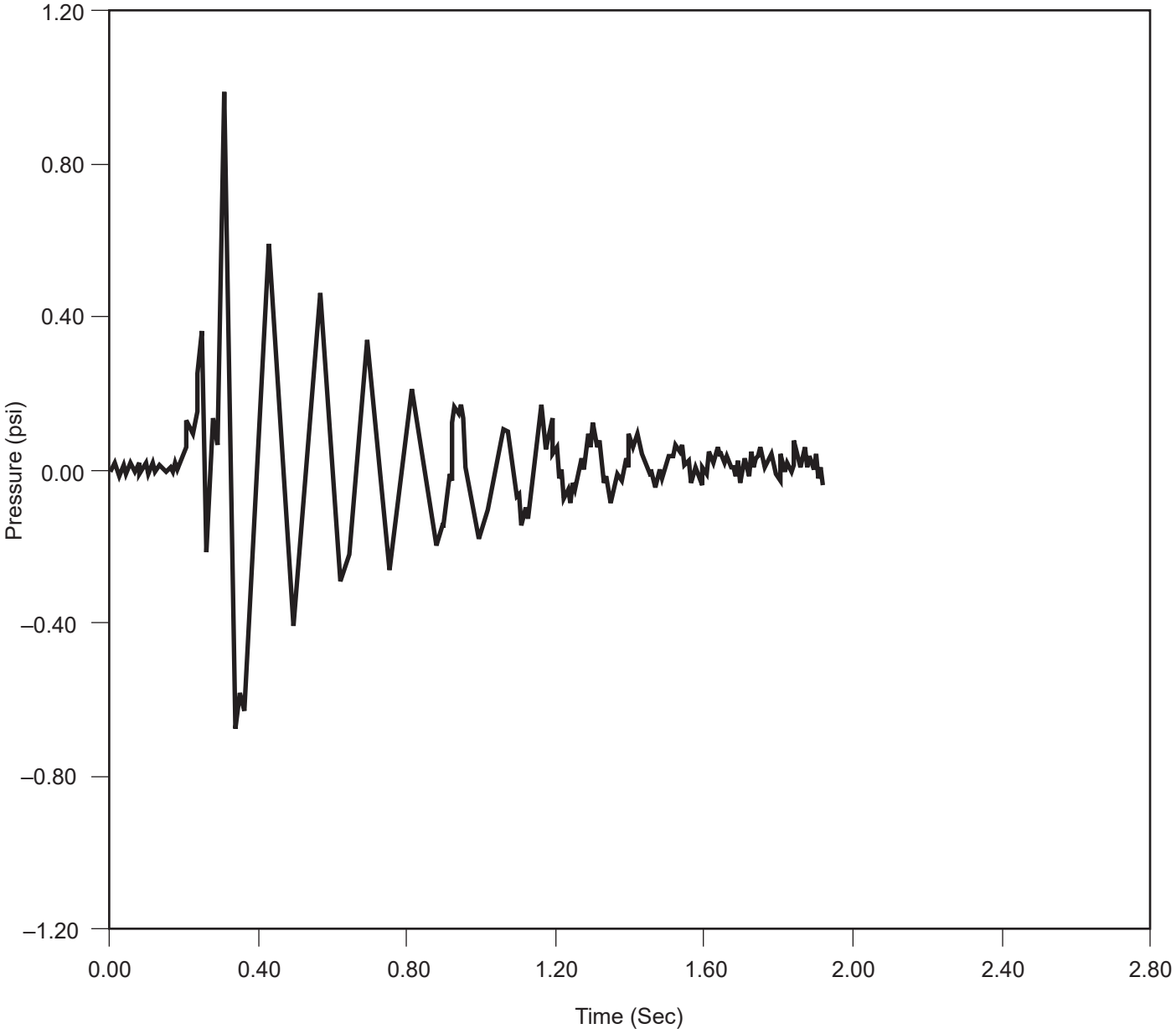

Columbia Generating Station Final Safety Analysis Report	SFP Design Wave Form (Normalized) Time History		
	Draw. No. 950021.68	Rev.	Figure 3A.3.1-5

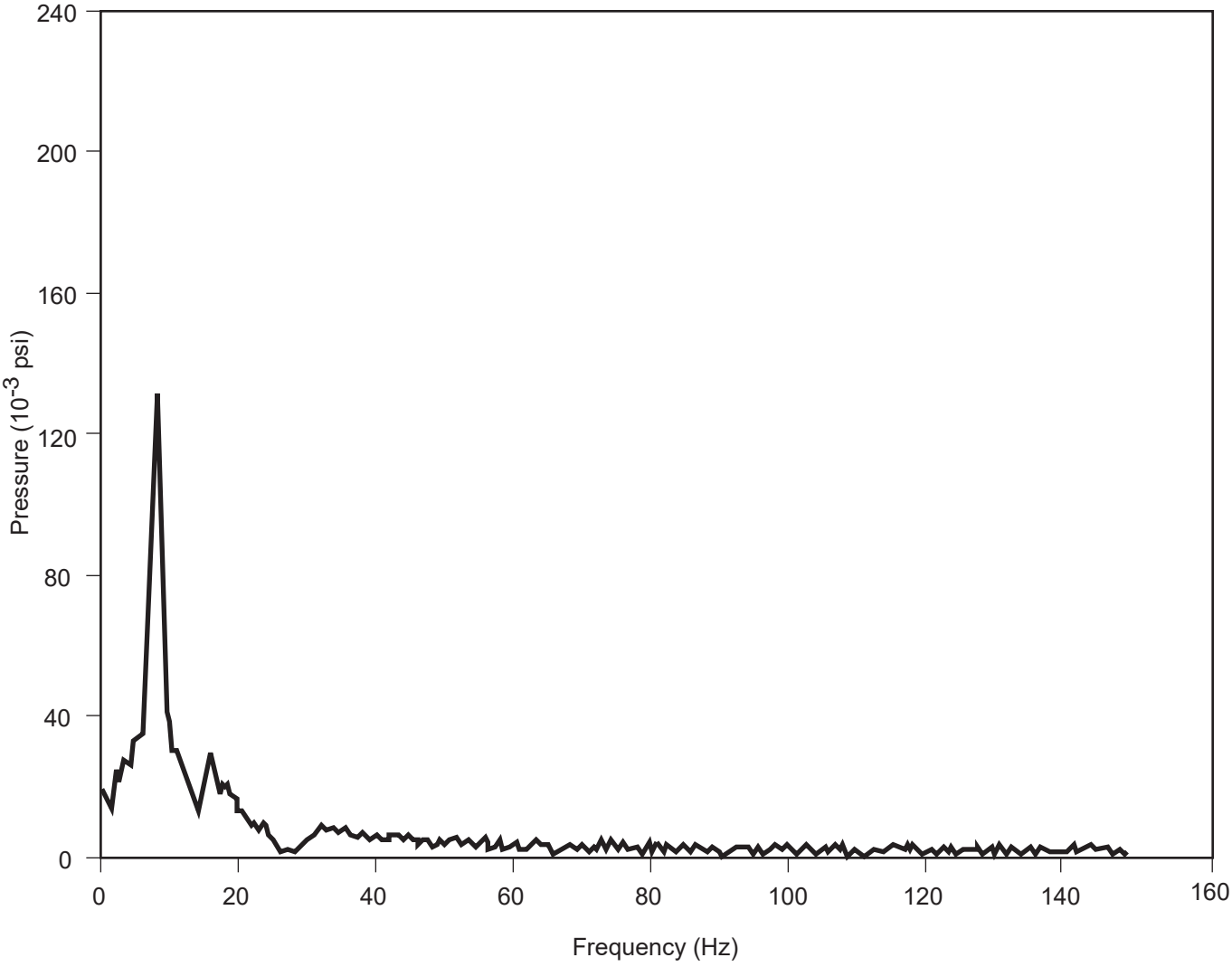

Columbia Generating Station Final Safety Analysis Report	SFP Design Wave Form (Normalized) Amplitude of Frequency Spectrum		
	Draw. No. 950021.69	Rev.	Figure 3A.3.1-6

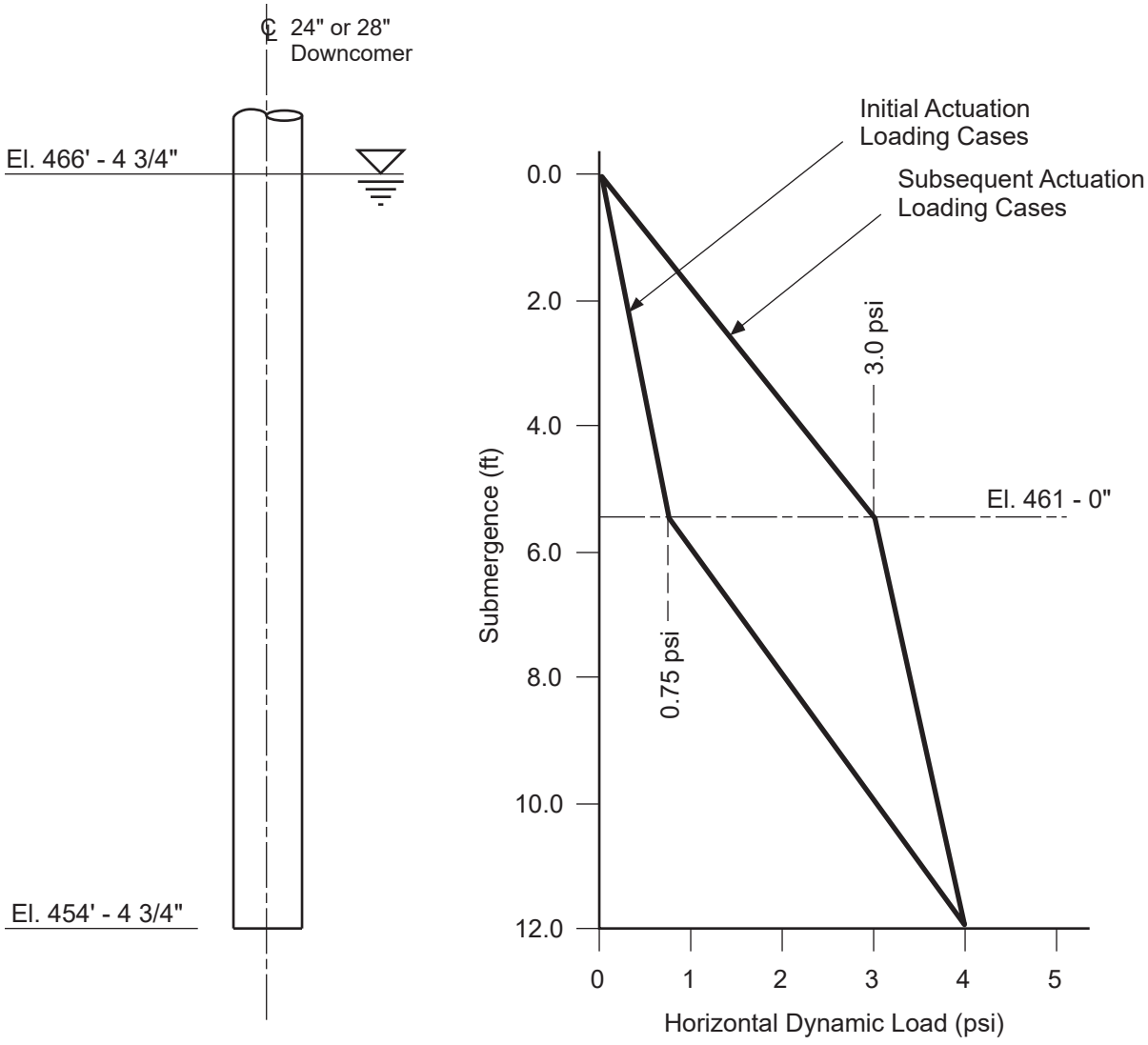

Notes:

1. Dynamic load factors are obtained from Figure 3A.3.1-10.

2. Horizontal loads on downcomers are applied in any horizontal direction producing maximum load effects.

Columbia Generating Station Final Safety Analysis Report	SRV Air Clearing Load Distribution on a Downcomer		
	Draw. No. 950021.70	Rev.	Figure 3A.3.1-7

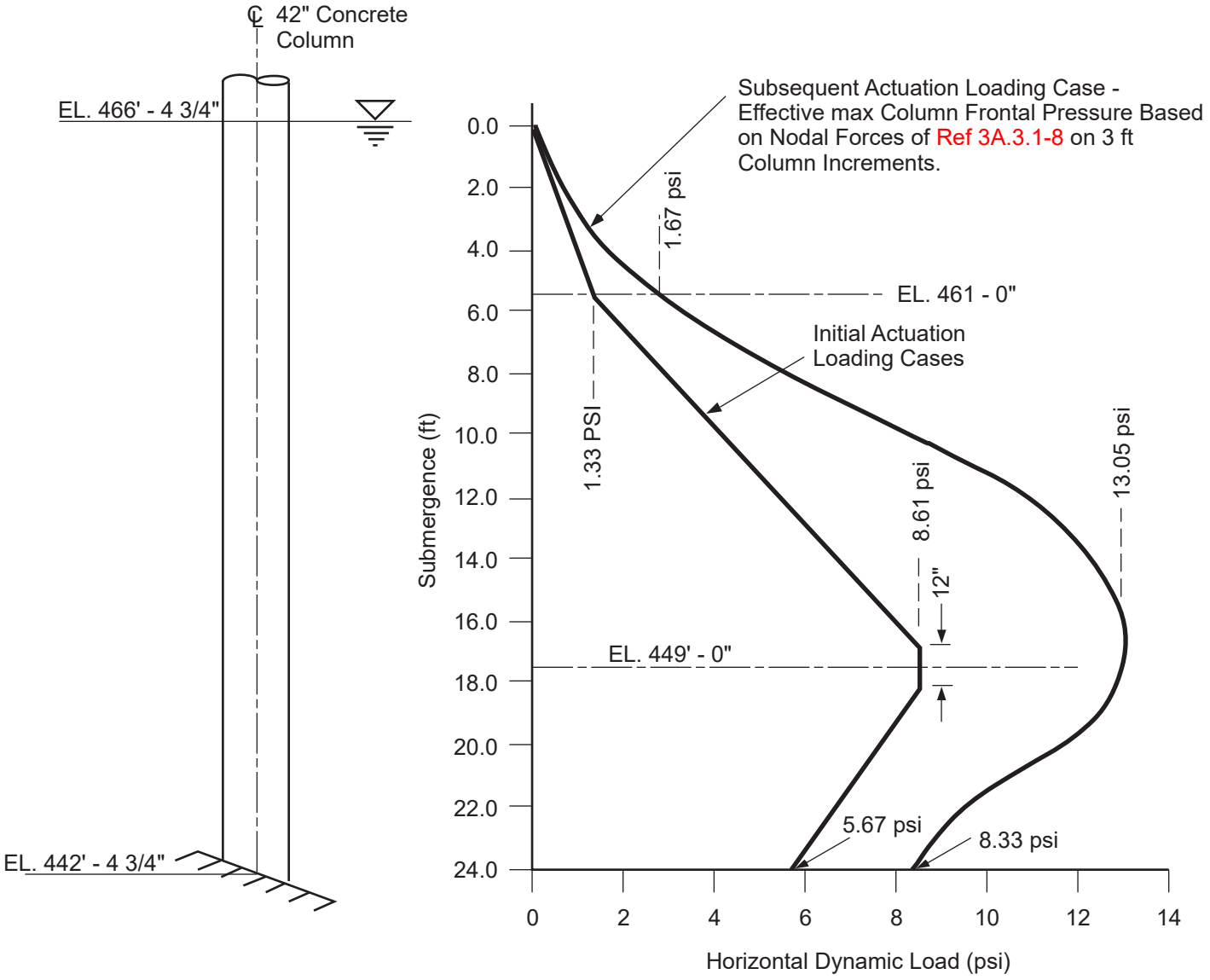

Notes

1. Dynamic load factors for initial actuation load cases are obtained from Figure 3A.3.1-10, dynamic load response reactions for the subsequent actuation case are tabulated in Table 3A.4.2-2 (see also References 3A.3.1-9 and 3A.3.1-10).

2. Horizontal loads on concrete column are applied in any horizontal direction producing maximum load effects.

Columbia Generating Station Final Safety Analysis Report	SRV Air Clearing Load Distribution on a Concrete Column		
	Draw. No. 950021.71	Rev.	Figure 3A.3.1-8

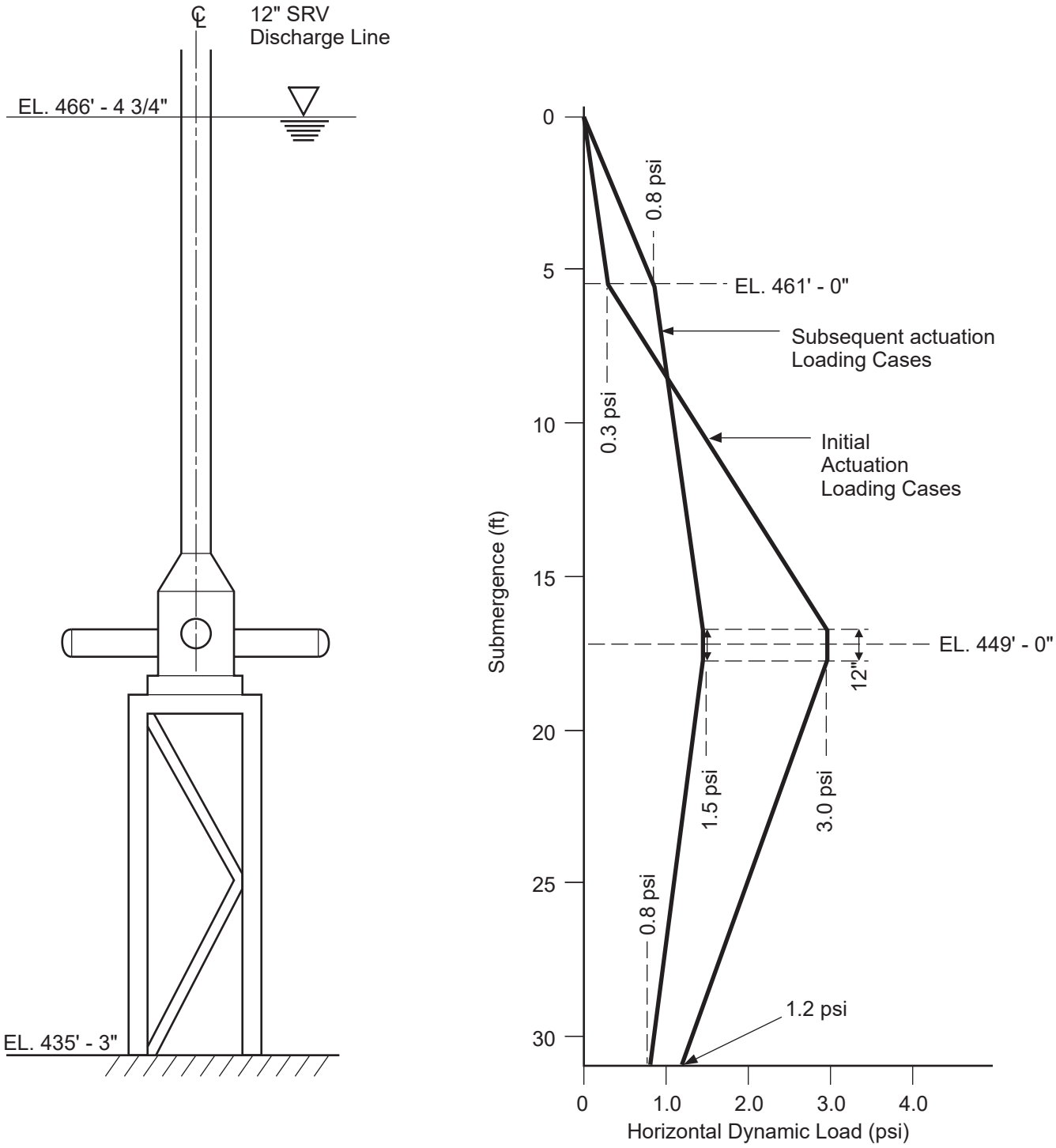

Notes

1. Dynamic load factors are obtained from Figure 3A.3.1-10.
2. Horizontal loads on SRV lines are applied in any horizontal direction producing maximum load effects.

Columbia Generating Station Final Safety Analysis Report	SRV Air Clearing Load Distribution on an SRV Discharge Line and Quencher Support		
	Draw. No. 950021.72	Rev.	Figure 3A.3.1-9

Note:

1. The curve labeled as MFP is used with initial actuation cases and the curves labeled as SFP are used with the subsequent actuation cases.

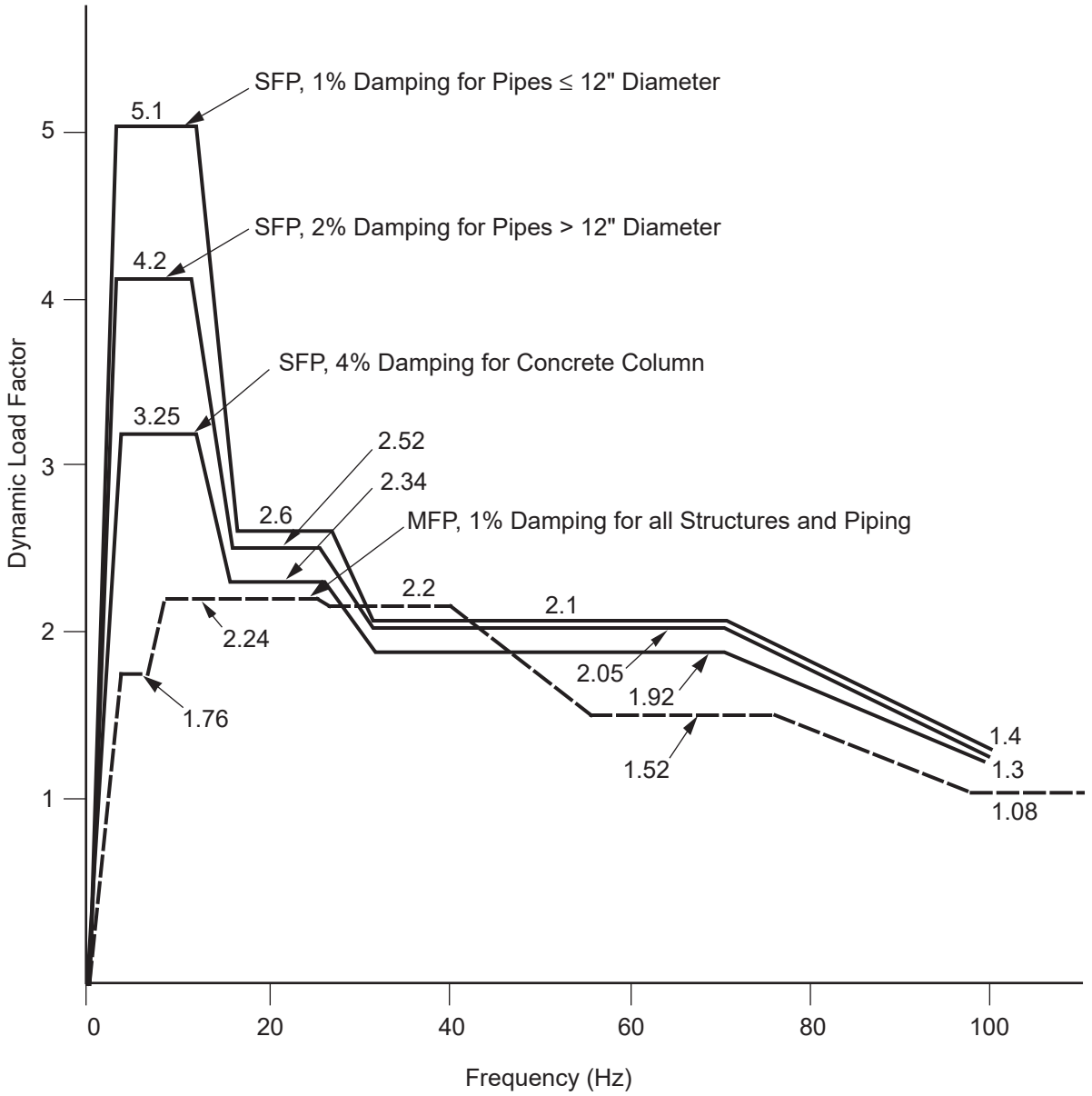

Columbia Generating Station Final Safety Analysis Report	Dynamic Load Factor Versus Frequency to be Used for Defining SRV Load on Submerged Structures		
	Draw. No. 950021.73	Rev.	Figure 3A.3.1-10

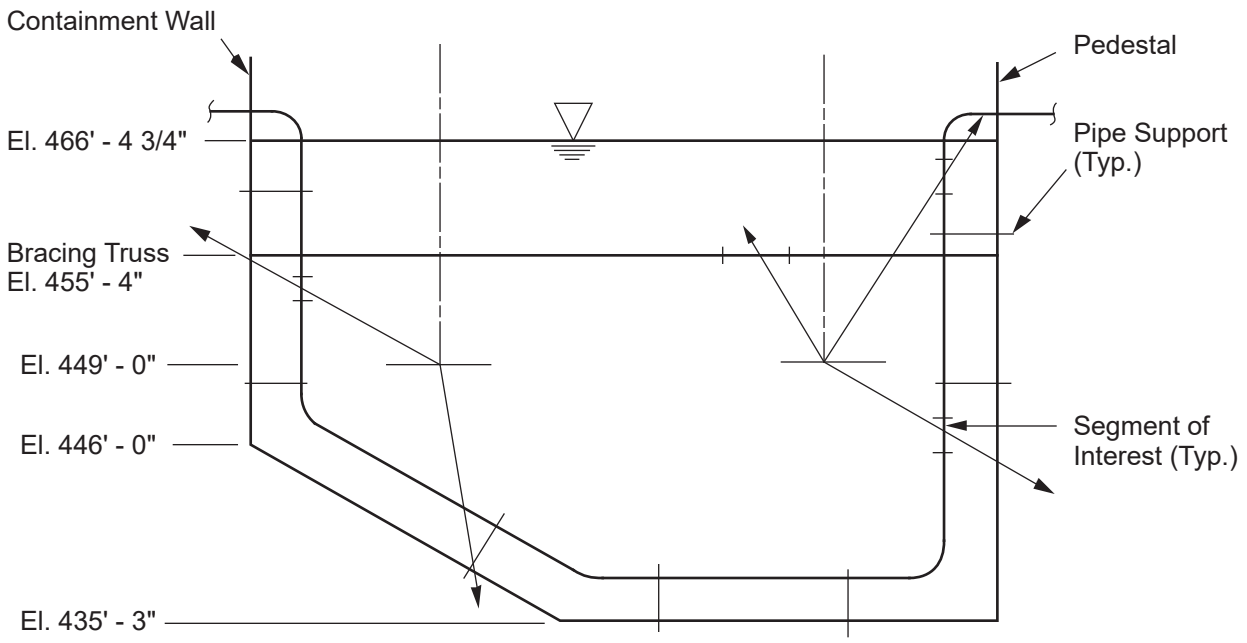

ELEVATION

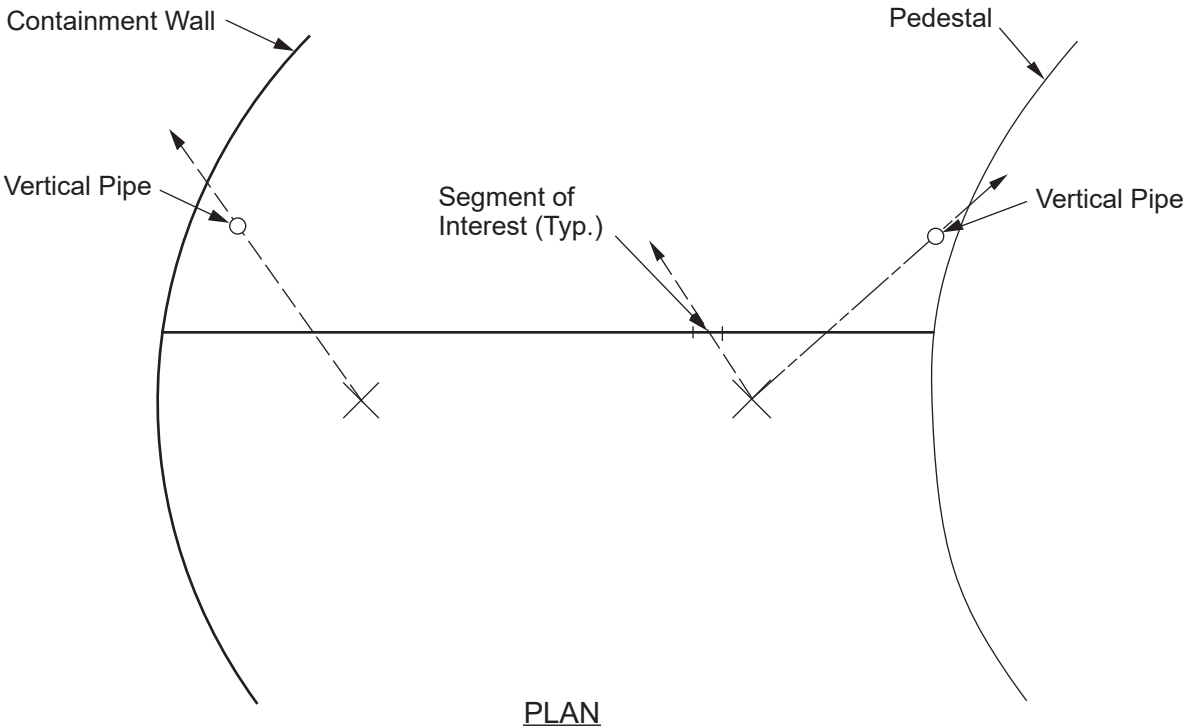

PLAN

Columbia Generating Station **Final Safety Analysis Report**	**SRV Air Clearing Load Distribution on Piping, Supports and Bracing Truss**		
	Draw. No. **950021.74**	Rev.	Figure **3A.3.1-11a**

Notes:

1. The load is applied along the line joining the center of the nearest actuating quencher and the geometric center of the pipe segment as shown in Fig. 3A.3.1-11a.

2. The equivalent static load ($p_1$lb) on piping, supports and bracing truss is:

   $P = \pm 0.32D^2L$ for initial actuation.

   $P = \pm 0.25KD^2L$ for subsequent actuation and for pipes near containment or pool bottom.

   $P = \pm 0.64KD^2L$ for subsequent actuation and for pipes near pedestal.

   where:

   D = diameter of pipe or the cylinder circumscribing a non-circular cross-section, in units of inches.

   L = length of segment, in units of inches

   K = see note 5

3. For load on piping, supports and bracing truss, the load component parallel to the pipe is neglected.

4. Since the load direction on piping, supports and bracing truss generally varies from one point to another, segmentation of the piping or structural component may be needed.

5. If the fundamental natural frequency of the piping, support or bracing truss member is greater than or equal to 17HZ, K = 1. This is applicable in most cases.

   If the fundamental natural frequency is less than 17HZ, then $K = \frac{DLF}{2.6}$,

   where DLF is the dynamic load facor and is determined from Fig. 3A.3.1-10. If K, as calculated above, is less than 1, K = 1 is used.

3A.3.2 LOADS ASSOCIATED WITH LOSS-OF-COOLANT ACCIDENT

A loss-of-coolant accident (LOCA) occurs when the integrity of the reactor coolant pressure boundary is breached and coolant is released. In order to contain the coolant which flashes to steam, CGS utilizes a GE Mark II pressure suppression system. The LOCA loading phenomena are discussed in Section 3A.3.2.2. The short-term and long-term LOCA loads are discussed in detail in Sections 3A.3.2.3 and 3A.3.2.4, respectively. Section 3A.3.2.5 describes the LOCA pressure and temperature transients and Section 3A.3.2.6 describes the CGS building response to the LOCA loads.

3A.3.2.1 Description of Pressure Suppression System

The CGS primary containment utilizes a GE Mark II over/under pressure-suppression configuration (see Figure 3A.2.1-1). The drywell and suppression chamber (or wetwell) are large sealed volumes designed to contain and condense escaping reactor coolant. Both contain structures and piping systems with the suppression chamber approximately half filled with water (suppression pool) for steam quenching. The drywell is connected to the suppression pool by 99 downcomer pipes that channel steam released during a LOCA for quenching and pressure suppression. Details of the downcomers, other piping systems and structures in the suppression chamber are shown in *Figures 3A.2.1-2 through 3A.2.1-8*.

Originally, 102 downcomer pipes were provided. During the assessment of the wetwell piping for hydrodynamic loads, it was found that the LOCA water jet loads on three containment vessel penetrations and their supports were excessive. To eliminate these loads, three of the 102 downcomers are capped in the drywell region, leaving 99 for venting steam to the wetwell.

The piping systems involved are at penetration X-31, X-34, and X-36. The three capped downcomers are on the outer circle of downcomers closest to the containment vessel, at azimuths 95°, 63°, and 42° *(Figures 3A.2.1-2 and 3A.2.1-4)*.

3A.3.2.2 Description of the Phenomena and Resulting Loads

The sequence of LOCA-generated hydrodynamic events described below cause dynamic loads on the containment and on structures and components located in the wetwell. These transient dynamic forces (see Table 3A.3.2-1) are termed dynamic forcing functions and are discussed in detail in Reference 3A.3.2-2 and summarized below. Section 3A.3.4 discusses the sequence of LOCA generated loads.

Following a postulated LOCA, released coolant causes the drywell pressure to rise rapidly and to accelerate the column of water in each downcomer downward due to the pressure rise. As the water exits the downcomers and enters the suppression pool, it forms a jet-pool interface which rolls into a mushroom shaped vortex ring. Expulsion of water out of *each of the*

downcomers results in a water jet which produces loads on submerged structures and suppression pool boundary pressure loads. Because bulk pool velocities are small during vent clearing, the corresponding impact and induced flow field drag loads are generally small. However, locally, significant drag loads may result.

Immediately after vent clearing, air* in the downcomer vents from the drywell beings to flow into the suppression pool. The LOCA air* bubbles are formed at the exits of the vents which charge and expand under the entire pool surface causing three dimensional drag loads on submerged structures. On contact with each other, the individual bubbles coalesce and accelerate the pool water above the downcomer vent exit plane vertically with no significant horizontal water motion.

Pool swell is the upward movement of suppression pool water above the exit plane of the vents due to injection of drywell air* below the pool surface. The velocity and acceleration of the water slug associated with this phenomenon produces impact, drag, and lift forces on structures within the swell zone.

The containment boundaries also experience loads due to drywell pressurization, air bubble pressure and wetwell free airspace compression. The rising pool surface motion is slowed due to the compression of air in the suppression chamber airspace. At about this time the rising bubbles break up the remaining pool slug which falls back to its original position terminating pool swell.

During pool swell, the bottom of the rising water slug continually falls back to the suppression pool due to instabilities at the bubble/water slug interface. This phenomenon and the large scale falling back of the remaining water slug at pool swell termination is known as fallback and causes drag and lift loads on structures in the pool swell zone, but a negligible containment boundary load.

Pool swell and the subsequent fallback of the remaining water slug are followed by an air/steam mixture flow through the downcomers until the drywell air is completely purged and the mass flux becomes pure steam. The loading phenomena associated with a high or medium steam mass flux is termed steam condensation oscillation (CO).

The air content and steam mass flow rate along with the pool temperature determines the behavior of the steam/suppression pool water interface. At high steam flow the interface location is essentially constant. As the flow rate decreases, due to reactor depressurization and associated drywell pressure decrease, the interface takes on an oscillatory character. The rate

* During a LOCA an air (nitrogen)/steam mixture would be blown down the downcomer vents; however, the analytical models of LOCA phenomena conservatively assume that only noncondensables are injected into the suppression pool.

of change of the displacement of the interface is reflected in submerged structure and suppression pool boundary loads.

When the steam mass flux decreases below a critical level a hydrodynamic phenomenon termed chugging occurs. Chugging is associated with low steam mass flow and high suppression pool boundary pressure spikes relative to CO. The phenomenon appears to be random in time and is caused by the complex interaction of water/steam condensation surface instabilities with the physical properties of the downcomers, the suppression pool, and the suppression pool boundaries. Chugging causes loads on the suppression pool boundary and submerged structures.

To determine the effects of downcomer capping on the hydrodynamic load definition, displacement time histories due to chugging are obtained at selected nodes on the containment vessel. Two sets of time histories are obtained. The first includes the effects of downcomer capping and the second excludes these effects. A comparison of the maximum displacements indicates that capping results in a slight reduction in the maximum displacements. Since lower displacements are associated with lower loads and stresses, it is conservative to assume uncapped downcomers for establishing the chugging load definition. The Containment Functional Design Analysis described in Section 6.2 was based on the venting capacity of 99 downcomers.

3A.3.2.3 Short-Term Loss-of-Coolant Accident Loads

Short-term LOCA loads are associated with hydrodynamic related phenomena that occur within a few seconds after LOCA initiation. The short-term loading phenomena include downcomer vent clearing, LOCA bubble charging, pool swell, and fallback. Figure 3A.3.2-1 illustrates the short-term loading phenomena. The flow fields during downcomer vent clearing and LOCA bubble charging are three-dimensional. Flow fields during pool swell and fallback are vertical and exist only above the vent exit elevation. Loads on submerged structures due to downcomer vent clearing and LOCA bubble charging are compared and the larger loads are employed for subsequent evaluations.

Section 3A.3.2.3.1 and Table 3A.H-1 provide a detailed summary of the short-term LOCA loading phenomenon and load calculation procedures used to assess CGS structures.

3A.3.2.3.1 Analytical Models and Supporting Test Data

3A.3.2.3.1.1 Vent Clearing Jet and Induced Flow Field Model. To calculate the CGS vent clearing jet and induced flow field, a LOCA Water Jet Analytical Model was developed for CGS. The model development and supporting test data are documented in Reference 3A.3.2-9. The calculation is performed for a unit cell with a downcomer at the center. Input data included the downcomer vent water clearing time history.

In order to calculate the downcomer vent water clearing time history and to provide a continuous pool surface displacement time history, a VENT computer code was developed. The model development and supporting test data for VENT are discussed in detail in Attachment 3A.D.2.

CGS input data for the LOCA water jet model and the VENT computer code are shown in Tables 3A.3.2-2 and 3A.3.2-3, respectively. As appropriate, maximums or minimums of CGS parameters are used to make the input data conservative in order to maximize vent water clearing velocities.

The vent exit water velocity and acceleration calculated by VENT are increased by 10% as requested by the NRC in Reference 3A.3.2-1. The velocity and acceleration time histories (including the 10% increase) are shown in Figures 3A.3.2-2 and 3A.3.2-3, respectively. As indicated in Reference 3A.3.2-9, tests have shown that LOCA jet continues to propagate downward for a short duration beyond the vent clearing instant due to rapidly charging air. Although the vent clearing time for CGS is 0.654 sec, the jet tip reaches a maximum velocity of about 15.8 ft/sec at t = 0.704 sec.

Submerged boundary loads during downcomer vent water clearing is specified to be a static addition of an overpressure of 24 psi to the local hydrostatic pressure below the downcomer vent exit (walls and basemat) with a linear attenuation to zero at the pool surface.

3A.3.2.3.1.2 Loss-of-Coolant Accident Bubble Charging Model. In order to calculate the flow field associated with the LOCA bubble charging phenomenon, a LOCA bubble charging model was developed. The model development and supporting test data are discussed in detail in Attachment 3A.D.4.

As discussed in Attachment 3A.D.4, the LOCA bubble charging flow field is calculated using a numerical technique for potential flows in the exact CGS suppression pool geometry. The uniformly charging LOCA bubbles are modeled as equal strength point sources located one downcomer radius below the CGS vent exit at el. 453 ft-4.75 in. Figure 3A.B-2 shows the modeled geometry for the CGS LOCA bubble charging phenomenon and Figures 3A.3.2-4 through 3A.3.2-6 show contour plots of the maximum radial, tangential, and vertical components of the gradient of the velocity potential.

The growth rate of the CGS LOCA bubble and the corresponding source strengths of the point sources are determined by continuity from the rate of displacement of the pool surface after vent clearing. The rate of displacement of the pool surface is determined from the pool swell analytical model (PSAM) (see 3A.3.2.3.1.3). Figure 3A.3.2-7 shows the velocity source strength, Q(t), the acceleration source strength, Q(t), and the radius, R(t), of the CGS LOCA bubbles charging process. Section 3A.B.4.2 discusses how to determine the CGS LOCA bubble charging transient flow field using the data in Figures 3A.3.2-4 through

3A.3.2-7. Tables 3A.3.2-4 and 3A.D-5 summarize results from the LOCA bubble charging analysis for CGS.

Since LOCA bubble charging represents the early portion of pool swell, the associated suppression pool boundary loads are discussed in Section 3A.3.2.3.1.3.

3A.3.2.3.1.3 Pool Swell Analytical Model. The pool swell transient is conservatively defined for CGS by the computer code SWELL based on the model presented in Reference 3A.3.2-10. The model development and supporting test data are discussed in Section 3A.C.3.

The CGS input data for SWELL are given in Tables 3A.3.2-3 and 3A.3.2-5. As appropriate, maximums and minimums of CGS parameters are used to make the input data conservative in order to maximize pool swell velocities. The CGS pool swell velocity, acceleration, displacement, bubble pressure, and wetwell air pressure versus time are given in Figures 3A.3.2-8 through 3A.3.2-12, respectively. Figure 3A.3.2-13 shows the pool lug velocity vs. displacement and Table 3A.3.2-6 shows results from the pool swell analysis for CGS. Velocities and accelerations calculated by the computer code SWELL are multiplied by a factor of 1.1, as requested by the NRC in Reference 3A.3.2-1. The 10% increase in velocities and accelerations is included in Figures 3A.3.2-8, 3A.3.2-9, and 3A.3.2-13.

Test results indicate that no significant froth will occur when the water slug breaks up during pool swell in Mark II containments. Hence, the load due to froth is negligible (Reference 3A.3.2-11) and no froth impingement is considered in the assessment of the design of structures.

Loads on submerged boundaries during pool swell are calculated by specifying that basemat and wall loads be determined from static addition of the maximum bubble pressure predicted by the PSAM to the local hydrostatic pressure below the downcomer vent exit plane and with a linear attenuation to the maximum wetwell air space pressure at maximum pool swell elevation.

Wetwell wall loads due to air compression during pool swell are specified by the direct application of the PSAM calculated wetwell air compression pressure to the wetwell walls above the pool surface.

The short-term drywell pressure history during pool swell is specified as the drywell pressure transient presented in Table 3A.3.2-5.

Test data have shown that a small short duration upward pressure differential on the diaphragm floor may occur due to rapid pressurization of the wetwell air space during the pool swell transient. The 4T Test results, discussed in Section 4.4.6.6 of Reference 3A.3.2-11, show a net upward load on the diaphragm floor of less than 2.2 psi. These low value 4T test results

were confirmed by small scale pool swell tests which showed an average scaled up net upward pressure differential of 1.83 psi. However, as discussed in Section 4.4.6.6 of Reference 3A.3.2-11, the Bodega Bay test data, for a wide variety of blowdown conditions, shows that the wetwell air space pressure never exceeds the drywell pressure.

Conservatively, therefore, the CGS diaphragm floor is assessed for an uplift pressure, P, of 5.5 psi. This is a maximum dynamic load and is in agreement with the loads specified in References 3A.3.2-2 and 3A.3.2-8.

3A.3.2.3.1.4 Fallback Model. The model presented in Reference 3A.3.2-11 is used to calculate the CGS fallback phenomenon. The model development and supporting test data are discussed in Reference 3A.3.2-11. The fallback model conservatively assumes the pool swell slug remains intact during pool swell and falls back from its maximum height 1.5 x H_o, where H_o is the pre-LOCA downcomer submergence, at full water density and under the constant acceleration due to gravity. Figure 3A.3.2-14 shows a plot of the fallback water slug velocity vs. elevation of water slug top surface.

Reference 3A.3.2-10 indicates that fallback loads on submerged boundaries are negligible and are therefore not specified. This is based on review of existing fallback data.

3A.3.2.3.2 Boundary Loads

The analytical models used to describe containment boundary loads during short-term LOCA loading phenomena are discussed in Section 3A.3.2.3.1. Figures 3A.3.2-15 through 3A.3.2-17 show the duration and distribution of the short-term containment boundary loads.

3A.3.2.3.3 Structure Loads

The CGS structures affected by short-term LOCA loading phenomena are identified in Section 3A.2.1.1 and shown in *Figures 3A.2.1-2 through 3A.2.1-8*. Short-term LOCA loads on submerged structures are given in Tables 3A.3.2-8, 3A.3.2-9, and Figure 3A.3.2-18.

Piping and structural components below el. 454.4 ft are subjected to loads caused by water clearing/air charging. Piping and structural components between elevations 454.4 ft and 434.4 ft are subjected to drag and lift loads caused by pool swell/fallback. Also, piping and structural components between elevations 466.4 ft and 484.4 ft are subjected to impact loads caused by pool swell. Direct hydrodynamic loads do not exist for piping and structures above el. 484.4 ft.

The following is a description of how the short-term LOCA definition models, discussed in Section 3A.3.2.3.1, are applied to CGS structures.

a. Vent clearing jet load

The loads on submerged structures located inside the jet boundaries are calculated using the vent exit velocity and acceleration at t = 0.654 sec. The loads on submerged structures located outside the jet boundaries are calculated using velocity and acceleration fields at t = 0.704 sec.

For elbows of 24-in. diameter pipes, the impact load for full momentum transfer of the intercepted jet (K=2) (Reference 3A.3.2-10) is calculated to be smaller than the drag load. Hence, drag load is used in the assessment.

Submerged structures located below the vent exit elevation are subjected to drag loads caused by the vent clearing jet. The types of drag loads and the formulas for calculating them are presented in item c below and in Attachment 3A.C. For the case of the vent clearing jet, the standard drag coefficient, C_D, is equal to 1.2; the acceleration drag coefficient, C_M, is equal to 2.0; and the lift coefficient, C_L, is equal to 0. In order to account for the dynamic nature of the loading phenomenon, a multiplier of 2.0 is used to calculate the equivalent static pressure.

b. Loss-of-coolant accident bubble load

Submerged structures located below the vent exit elevation are subjected to drag loads caused by LOCA bubble charging. The types of drag loads and the formulas for calculating them are presented in Item c below and in Attachment 3A.C. The velocity and acceleration at any point in the pool are calculated by applying the methods outlined in 3A.3.2.3.1.2.

For the case of LOCA bubble charging, the standard drag coefficient, C_D, is equal to 1.2; the acceleration drag coefficient, C_M, is equal to 2.0; and the lift coefficient, C_L, is equal to 0. These numerical values are consistent with References 3A.3.2-4 and 3A.3.2-6. In order to account for the dynamic nature of the LOCA bubble charging load phenomenon, a DLF of 2.0 is used to calculate the equivalent static pressure.

c. Pool swell load

The structures above the initial pool surface and below the maximum pool swell height are subject to impact loads due to the rising pool surface. The maximum dynamic pressure due to pool swell impact is calculated by using the methodology outlined in Reference 3A.3.2-2 and in Section III.B.3.c.1 of Reference 3A.3.2-1. In order to account for the dynamic nature of the pool swell loading phenomenon, the equivalent static pressure is obtained by

multiplying the maximum dynamic impact pressure by a DLF. The DLF is given in Figure 5 of Reference 3A.3.2-3. No impact loads on grating surfaces are specified since the CGS grating bars are narrow (typically 3/16-in. wide).

Structures located above the vent exit elevation and below the maximum pool swell height are subjected to drag forces during the pool swell transient. Drag loads have three components: standard drag, acceleration drag, and lift. Formulas for calculating these three types of load are presented in Attachment 3A.C. Standard drag load is velocity square dependent and acts in the flow direction. Acceleration drag load is proportional to the flow acceleration and acts in the flow direction. Lift load is velocity square dependent and is normal to the flow direction.

In order to calculate the three components of drag load, three coefficients are determined. These are: standard drag coefficient, C_D; acceleration drag coefficient, C_M; and lift coefficient, C_L. For circular cross-sections, coefficients C_D, C_M, and C_L are calculated using Reference 3A.3.2-6. For non-circular cross-sections, coefficients C_D and C_M are calculated using Reference 3A.3.2-7, and C_L is assumed equal to 1.6 as indicated in Reference 3A.3.2-5. Interference effects from adjacent structures are taken into account by using the methodology presented in Reference 3A.3.2-4. In order to account for the dynamic nature of the pool swell loading phenomenon, appropriate DLFs are used to calculate the equivalent static loads.

The gratings are subject to drag loads during pool swell due to resistance to the flow through them. The dynamic drag load is determined by the product of the differential pressure across the grating and the total plan area of the grating. The open area fraction for the grating is greater than 60%. The peak dynamic differential pressure across the grating is obtained from Figure 4-1 of Reference 3A.3.2-2. This figure is based on a pool swell approach velocity of 40 fps. Since the maximum pool swell velocity for CGS is smaller than 40 fps, the differential pressure values in Figure 4-1 of Reference 3A.3.2-2 are multiplied by a factor equal to the square of the ratio given by the maximum velocity divided by 40 fps. The maximum pool swell velocity is given in Table 3A.3.2-6 (plus a velocity multiplier of 1.1). In order to account for the dynamic nature of the pool swell loading phenomenon, a multiplier of 2.0 is used to calculate the equivalent static pressure.

Vertical drag pressure and horizontal lift pressure are applied simultaneously to the projected area of a cylinder circumscribing the structural member under consideration. The projection is always made on a plane normal to the direction of pressure. Vertical impact load is applied separately (not in combination with drag and lift loads) to structures located between elevations 466.4 ft and

484.4 ft on the projected area of the structure on the horizontal plane. Impact load is not used to check local bending effects of flanges or webs or ovaling effects of a pipe. The full drag, lift, or impact load calculated as outlined above is applied normal to a pipe or a structural component. There are no loads parallel to the longitudinal axis of the structure.

d. Fallback load

Structures located above the vent exit elevation and below the maximum pool swell height are subjected to drag and lift forces during fallback. The same methodology and the same drag and lift coefficients used in calculating pool swell drag and lift loads reused to define fallback drag and lift loads. To account for the dynamic nature of the fallback loading phenomenon, a multiplier of 2.0 is used to calculate the equivalent static load. No impact loads are specified during fallback (Reference 3A.3.2-11).

Fallback drag loads on gratings are specified to be equal in magnitude to the pool swell drag loads but opposite in direction.

The method of applying drag and lift pressure on a structural member is the same as that outlined at the end of Item c above.

3A.3.2.3.3.1 Loads on Major Structures. The major vertical structures are shown in *Figure 3A.2.1-2*. They are: the 102 downcomers (three were capped), the 18 SRV lines including quenchers and support towers, and the 17 concrete columns supporting the diaphragm floor. The major horizontal structures are the steel truss shown in *Figure 3A.2.1-3*, which provides lateral support to the downcomers and the SRV lines, and the platform at el. 472 ft 4 in. shown in *Figures 3A.2.1-3 and 3A.2.1-8*. The truss is submerged and the platform is located in the pool swell zone.

Hydrodynamic loads on the vertically oriented columns may occur only due to horizontal flow across the columns. Since the columns are vertical, pool swell and fallback loads are negligible. The columns are located along circumferential and radial lines of symmetry between downcomers; however, some asymmetry is created because some of the downcomers have a diameter of 24 in. while others have a diameter of 28 in. This small asymmetry in the downcomer arrangement causes small loads on the columns during water clearing/air charging. The magnitude and distribution of loads on the columns are shown in Table 3A.3.2-8 and Figure 3A.3.2-18 respectively.

As with the columns, hydrodynamic loads on the vertically oriented downcomers may occur only due to horizontal flow across the downcomers since the downcomers are located along circumferential and radial lines of symmetry between other downcomers and the suppression pool boundaries, the LOCA water jet, LOCA bubble charging, pool swell, and fallback

horizontal flows are small. Because the horizontal flows are small the resulting loadings are negligible.

Table 3A.3.2-8 and Figure 3A.3.2-18 show the magnitude and distribution of loads on a vertical SRV line as well as quencher arms during the water clearing/air charging phases of LOCA. Since quencher supports are below el. 448 ft-0 in., they are not subjected to short-term LOCA (Figure 3A.3.2-18). Pool swell and fallback exert negligible loads on the SRV lines due to the vertical orientation of the SRV lines above the downcomer vent exit plane. Because of their location below the downcomer vent exit plane, no pool swell or fallback loads are experienced by the quencher supports and quencher arms.

The downcomer bracing truss is oriented in a horizontal plane one foot above the downcomer vent exit plane. Since the truss is located above the downcomer vent exit the induced flow field and, therefore, drag load due to LOCA water jet during vent clearing is small. Horizontal LOCA bubble load on the bracing truss is small. Because the truss is above the downcomer vent exit plane, pool swell and fallback loads are experienced.

The only major horizontal structure in the pool swell zone is a platform at el. 472 ft-4 in. The platform consists of a grating with an open area fraction of 0.776 and is supported by 0.5-in. thick vertical members. The dynamic drag load is calculated to be 4.2 psi for pool swell and fallback induced loads and is multiplied by a DLF of 2.0. The equivalent static load is then applied to the total plan area of the platform. Because the platform is above the initial pool surface it does not experience vent clearing or LOCA bubble loads.

3A.3.2.3.3.2 Loads on Fully Submerged Piping Systems Below Elevation 454.4 ft. The 24-in. high-pressure core spray (HPCS) (X-31), 24-in. residual heat removal (RHR)-B (X-32), 8-in. reactor core isolation cooling (RCIC) (X-33), 24-in. low-pressure core spray (LPCS) (X-34), 24-in. RHR-A (X-35), 24-in. RHR-C (X-36), 6-in. suppression pool cleanup (X-100) and the 4-in. fuel pool cooling and cleanup (FPC) are the eight piping systems fully submerged in the CGS suppression pool. Seven systems enter the pool through containment penetrations at el. 452 ft 0 in. as shown in *Figure 3A.2.1-2*. The 4-in. FPC enters the pool through the pedestal at el. 451 ft 6 in. and is also shown in *Figure 3A.2.1-2*. Each of these pipes runs along the CGS suppression pool boundaries with a maximum distance between pipe centerline and boundaries of 46 in. Since these pipes are below the downcomer vent exit el. 454 ft 4.75 in. they are not subjected to pool swell or fallback loads during a LOCA. The magnitude and distribution of short-term LOCA loads on submerged pipes are given in Table 3A.3.2-8 and Figure 3A.3.2-18 respectively.

3A.3.2.3.3.3 Loads On Partially Submerged Piping Systems. The 13 partially submerged piping systems enter the suppression chamber through containment penetrations at el. 467 ft 9 in. as shown in *Figure 3A.2.1-3* and enter the pool vertically within a 39 in. distance from the containment as shown in *Figures 3A.2.1-6 through 3A.2.1-8*.

The pipes' horizontal portions are subjected to vertical drag and horizontal lift loads caused by pool swell/fallback. Also, the pipes' horizontal portions experience vertical impact pressure due to pool swell. Inclined braces above the penetrations are not subjected to pool swell impact since they are shielded by the pipes. Horizontal supports below penetrations do not experience pool swell impact since these supports are below el. 466.4 ft.

3A.3.2.3.3.4 Loads on Piping Systems and Structural Components Between Elevations 454.4 ft and 484.4 ft. The portion of the wetwell between elevations 454.4 ft and 484.4 ft is affected by pool swell and fallback only. Piping systems located in this zone are subjected to drag, and lift loads. In addition piping between the normal pool surface, el. 466.4 ft, and el. 484.4 ft is subjected to impact loads unless shielded by pipe supports below. These piping systems include penetration sleeves, pipe stubs, pipes, and pipe supports.

3A.3.2.4 Long-Term Hydrodynamic Loads

Long-term hydrodynamic loads refer to the LOCA related loads exerted on the pool boundaries and on submerged wetwell structures following the fallback transient. These loads are associated with steam condensation at the downcomer vent exits as steam from the drywell flows into the suppression chamber via the vents. Depending on the steam mass flux through the vents, two types of loading conditions are anticipated. During high or medium mass flux so-called COs occur. During low mass flux, chugging loads occur. Chugging loads and CO loads are discussed in the following sections.

3A.3.2.4.1 Analytical Models and Supporting Test Data

3A.3.2.4.1.1 Chugging Loads. The design specification for chugging loads herein is based on the major test programs on the effects of CO and chugging, which were conducted for the Mark II Containment Program during the period of 1975 to 1981 (References 3A.3.2-16 and 3A.3.2-17). It takes account of the generic chugging load definition developed for the Mark II type plants (References 3A.3.2-18 and 3A.3.2-19), but departs from the generic definition in order to provide for important structural differences between the CGS plant and the generic plant. The design specification (Reference 3A.3.2-15) is called the Revised Definition as it represents a revision of an earlier definition called the Improved Definition (Reference 3A.3.2-20) which was based only on the first stage of the test results, the 4T Program (Reference 3A.3.2-16). The current design specification, i.e., the Revised Definition, was submitted to and approved by the NRC (Reference 3A.3.1-6). The scope of the design specification covers both single vent loads and multiple vent loads applicable to the CGS plant.

The single vent load definition is based on two series of full scale single vent tests, namely, the 4T tests and the 4TCO tests (References 3A.3.2-16 and 3A.3.2-17). The load is defined in terms of a series of source loads located at the vent exit with significant load features selected on the basis of the pressure readings at the test tank and the characteristics disclosed by the

vent-pool-tank system. Both test programs indicate the impulsive and random strength nature of chugging, and it is noted that the strength, although random, is related to system conditions. The greater chugs of the 4TCO program are controlling relative to pressure amplitude, frequency content, and spatial distribution of pressure. Thus, the Revised Definition is a group of seven source loads selected on the basis of the seven greatest chugs from the 4TCO data. A design load envelope is obtained by applying the source loads in turn at the vent exit; each load consists of an impulsive pressure gradient with appropriate system parameter values. To calculate results at the wetwell tank, the theory of acoustic fluids is used with a fully coupled model consisting of the vent steam, the pool water, and the wetwell tank. The calculated results, due to application of the defining source loads, envelope both the 4TCO data and the 4T data, relative to all pertinent characteristics.

The multiple vent load definition utilizes the preceding single vent definition in conjunction with the 102 vents in the CGS plant. It is described in Section 3A.3.2.4.2.1.

3A.3.2.4.1.2 Condensation Oscillation Loads. The generic definition of CO loads, as developed for the Mark II Containment Program, is given in Reference 3A.3.2-21. The definition is based on direct application of the bounding pressure measurements from full-scale single vent 4TCO tests to the Mark II containment boundaries.

A comparison has been made between this load definition for CO loads, the JAERI CO results, and the preceding definition for chugging loads. The comparison, as reported in Reference 3A.3.2-12 shows that the CO loads and the chugging loads are similar with respect to pertinent characteristics such as randomly varying amplitude, frequency content, and desynchronization of vent loads. However, it is also shown (References 3A.3.2-12 and 3A.3.2-23), that in a Mark II multivent containment, the controlling boundary pressures due to the CO load are less than those due to the chugging load. It is therefore concluded that the CO load does not represent a governing load and that it need not be considered in the assessment of the design adequacy of the CGS structures.

3A.3.2.4.2 Boundary Loads

3A.3.2.4.2.1 Chugging Loads. The current design specification, i.e., the Revised Definition (Reference 3A.3.2-15), includes definition of the chugging boundary loads due to multivent chugging together with the associated application methodology. The chugging pressures on the suppression pool boundary are defined as resulting from the application of the single vent design chugging loads at all 102 vent exits in the CGS pool-containment structure. To determine the boundary pressures, the analysis is based on a fully coupled model which accounts for all important plant parameters: vent length, three-dimensional multivent pool geometry, pool with sloped bottom, and flexibility of pool structural boundaries. Detailed analytical methods are described in Reference 3A.3.2-15.

The methodology for application of the source loads to the 102 vents is generally similar to that of the generic load definition (Reference 3A.3.2-19), and reflects the characteristics of multivent behavior disclosed by the JAERI and CREARE test programs. Two deterministic spatial distributions of chug strengths, similar to but not the same as the generic distributions, are specified to maximize axisymmetric and nonaxisymmetric responses. Random variation of chug initiation tines from vent to vent is recognized with desynchronization of the start times as in the generic definition. The seven basic single vent loads of the design specification are applied in turn at the 102 vents with variation of strength and initiation time between vents as previously noted; an envelope of containment pressures is calculated. The calculated results exceed the test results in the 4TC0 and the JAERI tests with respect to maximum containment pressures and the Fourier amplitude spectra for containment pressures.

3A.3.2.4.2.2 Condensation Oscillation Loads. The discussion in Section 3A.3.2.4.1.2 on the relative magnitudes of chugging loads and CO loads is applicable. As noted therein, the controlling boundary pressures due to chugging exceed those due to CO. Hence, the CO load is not a governing load and it is not considered in the assessment of the design adequacy of the CGS structure.

3A.3.2.4.3 Submerged Structure Loads

Loads on submerged structures caused by CO and chugging are presented in the following sections.

3A.3.2.4.3.1 Condensation Oscillation Loads. There is no need to assess the CGS plant for a CO load definition since CO loading is less critical and is bounded by the chugging load.

3A.3.2.4.3.2 Chugging Loads. The LOCA chugging loads on submerged structures are defined consistently with the load definition for the pool boundary. Pressure field in the fluid is obtained using chugging design sources developed for pool boundary loads (Reference 3A.3.2-15). From the pressure field, pressure gradients and loads on submerged structures are calculated.

In the method described above, it is assumed that the flow in the vicinity of the vent during chugging is unaffected by the presence of pool boundaries or other sources in the pool. Therefore, fluid pressures in a single cell/single vent pool are representative of pressures near the vent in the CGS pool.

For structures located beyond a distance of 4R (R being the downcomer radius) from the vent exit center, the chugging loads are negligible and need not be considered in the design assessment of the structures. Equivalent static chugging loads for structures located within a distance of 4R from the vent exit center are calculated by using the formula:

$$p = C_m \frac{\pi}{4} D \times DLF \times \frac{\partial p}{\partial n}$$

where

p = equivalent static pressure on structure (psi)

C_m = hydrodynamic mass coefficient = 2.0

DLF = dynamic load factor = 1.5

D = diameter in inches of the pipe or of the cylinder circumscribing the cross-section of a support member

$\frac{\partial p}{\partial n}$ = pressure gradient across a submerged structure (psi/in). Numerical values for this term are given in Figure 3A.3.2-19.

Chugging loads calculated as outlined above are listed as follows:

a. Bracing Truss Members: A load of 10 psi is applied vertically upward or downward. This load is applied simultaneously to all members connecting to a downcomer. Chugging event under each vent occurs with random phasing from events at other vents. Therefore, this load is not applied simultaneously to all members of the truss;

b. Inner Row SRV Line: A load of 12 psi is applied radially outward or inward from the vent axis of the adjacent inner row downcomer. The load distribution is assumed uniform between el. 454.4 ft and el. 452.4 ft and then linearly decreasing to zero at Point A (Figure 3A.3.2-19); and

c. Pipes and Supports: A pressure is applied vertically upward or downward. The magnitude and distribution of the vertical pressure are calculated using Equation 3A.3.2-1 and Figure 3A.3.2-19. The maximum vertical pressure is 2.4D psi. Simultaneously, a radial pressure is applied inward or outward from the vent axis of the adjacent outer row downcomer. The magnitude and distribution of the radial pressure are calculated using Equation 3A.3.2-1 and Figure 3A.3.2-19. The radial load is assumed zero above the vent exit.

The pressure loads listed above are multiplied by the projected area of the structure segment normal to the direction of the loading to obtain the total force on each segment. The total load on each segment of the structure is applied at the geometric center of the segment

3A.3.2.4.4 Lateral Loads on Downcomer Vents

This section provides the definition of the lateral loads which occur near the downcomer exits during chugging. The definition conforms with the requirements for such loads as prescribed in NUREG-0808 (Reference 3A.3.2-8). These lateral loads are defined herein in relation to the downcomer bracing system which is described and assessed in Section 3A.4.2.1. The principal features included in the definition are single vent loads, loads on multiple vents, overall loading of the bracing system, and loads and downcomer size.

a. Single Vent Load - The maximum lateral exit load on one 24-in. downcomer is defined as a dynamic single pulse load having a half sine wave shape with load amplitude of 65 klbf (kips) and duration of 3 msec. For the assessment of the bracing system, a dynamic analysis of the system acted on by this single vent load is made.

b. Loads on Multiple Vents - With multiple vent loading, the force on each loaded vent is also defined as a single pulse half sine wave dynamic load. However, in line with NUREG-0808, the pulse duration is taken to vary over a range of values and the force amplitude is taken to depend on the pulse duration, T, and on the number of loaded vents. The vent force, F(t), is evaluated by the expression:

$$F(t) = M\, A(T) \sin (t/T) \quad 0 \leq t \leq T \qquad \text{(Eq. 3A.3.2-2)}$$

where

$$A(T) = (50 - 20\, T/3) \text{ klbf} \quad 3 \leq T < 6 \text{ ms} \qquad \text{(Eq. 3A.3.2-3)}$$

The factor M is a load reduction factor which depends on the number of loaded vents and the required level of exceedence probability. For a given number of loaded downcomers, it is evaluated at the exceedence probability level of 10^{-4} using the diagram specified in NUREG-0808.

To determine the controlling value of the amplitude factor A, the bracing system was analyzed over the range of the duration, T. Thus, values of T in the range of 3 to 6 ms and the associated values of A were utilized. It was determined that the controlling value of T was always 3 ms. Consequently, the associated value of A in the above equation for F(t) is evaluated as 30 kips.

For the assessment under multiple vent loading, the bracing system is analyzed dynamically with lateral loads on a given set of vents. In the analysis, the force on each loaded vent is defined by Equation 3A.3.2-2 where M is obtained as previously described, A equals 30 klbf, and T equals 3 ms.

c. Overall Loading of the Bracing System - The design assessment of the downcomer bracing system under multiple lateral exit loads in 3A.4.2.1 describes the method used to determine the controlling number of loaded vents and the controlling direction of the loads. The methodology is generally similar to that of Section 2.3.2.2 of NUREG-0808.

d. Loads and Downcomer Size - The downcomer system consists of 102 downcomers of which 84 are 24-in. diameter and 18 are 28-in. diameter. The lateral loads on the 24-in. diameter vents have been defined above in paragraphs a and b for the cases of single vent loading and multiple vent loading. In line with NUREG-0808, the lateral loads on the 28-in. vents are defined as 1.34 times as great as those on the 24-in. vents.

3A.3.2.5 Pressure and Temperature Transients

A LOCA causes a pressure and temperature transient in the drywell and wetwell due to mass and energy released from the line break. The drywell and wetwell pressure and temperature histories are employed to establish the structural loading conditions in the containment. The response must be determined for a range of parameters such as break size, reactor pressure, and initial (preincident) containment conditions. The analytical models used to evaluate the pressure and temperature response of the containment have been developed by GE (References 3A.3.2-13 and 3A.3.2-14).

The assumptions made for analyzing the LOCA transients were based on conservatively predicting the blowdown mass and energy rates into the drywell and suppression pool. The following assumptions were made:

a. Initial drywell pressure of 0.75 psig,

b. Downcomer submergence at high water level,

c. Minimum drywell free air volume,

d. Minimum wetwell free air volume,

e. Minimum water volume in wetwell, and

f. Suppress ion pool initial temperature and service water temperature at the maximum Technical Specifications limit.

(Assumptions b, d, and e are inconsistent with each other but provide conservative results.)

For the intermediate size breaks, it was assumed that all the mass and energy releases from the broken pipe discharge via the drywell into the suppression pool. Normally, a portion of the mass and energy release will be dispersed over the drywell volume causing the drywell pressure and temperature to rise.

3A.3.2.5.1 Results for CGS

The drywell pressure transients have been calculated with inventory effects included in the analysis. The results for the recirculation and main steam line breaks are presented in Figures 3A.3.2-20 through 3A.3.2-28.

The plant parameters used are given in Table 3A.3.2-7. The spectrum of accident conditions covered are:

a. Large double-ended break of a recirculation line,
b. Large double-ended break of one main steamline, and
c. Intermediate recirculation line break (0.1 ft^2 break area).

Table 3A.3.2-5 provides the drywell pressure transient during the 2 sec period immediately following a recirculation line break. This table differs from the values plotted in Figure 3A.3.2-20, since it includes the influence of reactor subcooling on the initial blowdown flow rate from the break. This is a short-term effect that occurs during the first few seconds of the accident and does not influence the maximum drywell pressure. Since this LOCA leads to the most severe short-term pressure conditions, the data in Table 3A.3.2-5 are used to calculate the pool swell velocities and associated effects.

Figures 3A.3.2-20 through 3A.3.2-24 give the pressure/temperature transients resulting from a large recirculation line break. As shown in Figure 3A.3.2-20, the drywell pressure increases to a maximum value of 35 psig in about 20 sec. Also, the pressure of the wetwell air, while increasing with time, is less than the drywell pressure until the ECCS flow starts to spill from the break. The drywell temperature increases to about 280°F (Figure 3A.3.2-23), while the temperature of the suppression pool increases to about 220°F. Similar response curves for a main steam line break are also shown in Figures 3A.3.2-25 and 3A.3.2-26, and those for an intermediate break accident (IBA) are shown in Figures 3A.3.2-27 and 3A.3.2-28.

3A.3.2.5.2 Differential Pressure Load on the Diaphragm Floor

As illustrated in Figures 3A.3.2-20, 3A.3.2-21, 3A.3.2-25, and 3A.3.2-28, the net pressure on the diaphragm floor is downward throughout a LOCA transient (refer to FSAR Section 6.2.1). However, the diaphragm floor is conservatively designed for a net uplift pressure of 5.5 psi as discussed in 3A.3.2.3.1.3. The maximum net downward pressure on the diaphragm occurs during the short-term part of the large break LOCA transients and reaches a maximum value of 20 psi.

During the initial phase of a LOCA transient, drywell air is blown down through the downcomer vents into the wetwell by the steam from the break. The steam rapidly replaces the air in the drywell.

Initially, a steam-air fixture flows through the vents into the suppression pool and forms bubbles that rise to the pool's surface. Condensation of the steam in the bubbles allows only the air component to reach the wetwell airspace. As the air collects, the air space becomes pressurized and heated.

As the reactor vessel blowdown ends, the emergency core cooling system floods the core with water which starts to spill out of the break into the drywell. This results in rapid condensation of the steam, which has replaced the air, and consequent rapid drywell depressurization below that in the wetwell. Before the net upward pressure becomes large, however, nine 24-in. vacuum breakers, which are attached to nine selected downcomers, open to equalize the pressure difference by returning the air (nitrogen) collected in the wetwell to the drywell. These vacuum breakers are adjusted to open when the differential pressure across them is in the range of 0.10 to 0.35 psi.

3A.3.2.6 Building Response to Loss-of-Coolant Accident Loads

The analysis and response of the reactor building under the action of long-term LOCA loads is discussed in Section 3A.5.2.

3A.3.2.7 References

3A.3.2-1 "Mark II Containment Lead Plant Program Load Evaluation and Acceptance Criteria," NUREG-0487, NRC, October 1978.

3A.3.2-2 Mark II Containment Dynamic Forcing Functions Information Report (DFFR), General Electric Company, NEDO-21061, Revision 4, November 1981.

3A.3.2-3 "Impact Loads on Structures Above Mark II Containment Pools," G. Maise, Brookhaven National Laboratory, February 28, 1978.

3A.3.2-4 "Submerged Structure Methodology," Appendix G, Zimmer Power Station, Unit 1, DAR Amendment No. 13, October 1980.

3A.3.2-5 "Mark II Containment Lead Plant Program Load Evaluation and Acceptance Criteria," NUREG-0487, Supplement No.1, NRC, September 1980.

3A.3.2-6 "In-Line and Transverse Forces on Cylinders in Oscillatory Flow at High Reynolds Number," Journal of Ship Research, Volume 21, No. 4, pp. 200-216, December 1977.

3A.3.2-7 "Forces on Cylinders and Plates in an Oscillating Fluid," G. H. Keulegan and L. H. Carpenter, Journal of Research of the National Bureau of Standards, Volume 60, No. 5, May 1958.

3A.3.2-8 "Mark II Containment Program Load Evaluation and Acceptance Criteria," NUREG-0808, USNRC, August 1981.

3A.3.2-9 "An Analytical Model for LOCA Water Jet in Mark II Containments (The Ring Vortex Model)," Burns and Roe, Inc., September 1980.

3A.3.2-10 Mark II Containment Dynamic Forcing Functions Information Report (DFFR), General Electric Company, NEDO-21061, Revision 3, June 1978.

3A.3.2-11 Mark II Containment Dynamic Forcing Functions Information Report (DFFR), General Electric Company, NEDO-21061, Revision 2, September 1976.

3A.3.2-12 "Comparison of Condensation Oscillation and Chugging Loads for Assessment of WPPSS Nuclear Project No. 2," Summary Report, Proprietary, Burns and Roe, Inc., December 1981 transmitted to NRC by letter GO2-81-552 dated December 24, 1981.

3A.3.2-13 The General Electric Pressure Suppression Containment Analytical Model, General Electric Company, NEDO-10320, April 1971.

3A.3.2-14 Safe System Analysis for Standby Core Cooling Equipment, General Electric Company, NEDE-10169, Proprietary, September 1977.

3A.3.2-15 "Chugging Loads - Revised Definition and Application Methodology for Mark II Containments (Based on 4TCO Test Results)," Technical Report, Burns and Roe, Inc., July 1981. Transmitted to NRC by letter GO2-81-189 of July 22, 1981.

3A.3.2-16 "Mark II Pressure Suppression Test Program - Phase I, II, and III of the 4T Tests - Application Memo," NEDE-23678-P, Rev. 0, General Electric Company, January 1977.

3A.3.2-17 "4T Condensation Oscillation Test Program Final Test Report," NEDE-24811-P, General Electric Company, May 1980.

3A.3.2-18 "Mark II Improved Chugging Methodology," NEDE-24822-P, General Electric Company, May 1980.

3A.3.2-19 "Generic Chugging Load Definition Report," NEDE-24302-P, General Electric Company, April 1981.

3A.3.2-20 "Chugging Loads - Improved Definition and Application Methodology to Mark II Containments," Technical Report, Proprietary, Burns and Roe, Inc., June 1979.

3A.3.2-21 "Generic Condensation Oscillation Load Definition Report," NEDO-24288, General Electric Company, February 1981.

3A.3.2-22 "Mass Energy Report," General Electric Report, GEWP-2-77-533, March 15, 1977.

3A.3.2-23 Letter report on C.O. loads GO2-82-351 of April 1, 1982.

3A.3.2-24 "WPPSS Nuclear Project No. 2, Final Safety Analysis Report," Washington Public Power Supply System, Chapter 6.2.

3A.3.2-25 AEC-TR-6630, "Handbook of Hydraulic Resistance - Coefficients of Local Resistance And Friction," I. E. Idel'chik, 1960.

3A.3.2-26 "Flow of Fluids Through Valves, Fittings, and Pipe," Technical Paper No. 410, Crane Company, 1980.

3A.3.2-27 "CONTEMPT-LT--A Computer Program For Predicting Containment Pressure-Temperature Response to A Loss-of-Coolant Accident," Aerojet Nuclear Company, June 1975.

3A.3.2-28 "Mark II Pressure Suppression Containment Systems: An Analytical Model of the Pool Swell Phenomenon," NEDE-21544-P, General Electric Company, December 1976.

3A.3.2-29 Response to NRC Question 020.071, transmitted via letter MFN-275-78 to Mr. J. F. Stolz, Chief, Light Water Reactor Branch No. 1, USNRC, from Mr. L. J. Sobon, Manager BWR Containment Licensing, General Electric Company on "Responses to NRC Request for Additional Information (Round 3 Questions)," dated June 30, 1978.

Table 3A.3.2-1

Summary of Loss-of-Coolant Accident Affected Structures

Structures Experiencing LOCA Loads	Type of Loading Condition					
	Short-Term LOCA				Long-Term LOCA	
	Water Jet	LOCA Bubble	Pool Swell	Fallback	Condensation Oscillations	Chugging
Fully submerged piping systems	3A.3.2.3.1.1/ 3A.3.2.3.3.2	3A.3.2.3.1.2/ 3A.3.2.3.3.2			3A.3.2.4.1.2/ 3A.3.2.4.3.1	3A.3.2.4.1.1/ 3A.3.2.4.3.2
Partially submerged piping systems	3A.3.2.3.1.1/ 3A.3.2.3.3.3	3A.3.2.3.1.2/ 3A.3.2.3.3.3	3A.3.2.3.1.3/ 3A.3.2.3.3.3	3A.3.2.3.1.4/ 3A.3.2.3.3.3	3A.3.2.4.1.2/ 3A.3.2.4.3.1	3A.3.2.4.1.1/ 3A.3.2.4.3.2
Piping systems fully above initial pool surface			3A.3.2.3.1.3/ 3A.3.2.3.3.4	3A.3.2.3.1.4/ 3A.3.2.3.3.4		
Grating			3A.3.2.3.1.3/ 3A.3.2.3.3.1	3A.3.2.3.1.4/ 3A.3.2.3.3.1		
Drywell floor			3A.3.2.3.2			
Containment wall	3A.3.2.3.1.1		3A.3.2.3.2	3A.3.2.3.2	3A.3.2.4.2.2	3A.3.2.4.2.1
Pedestal	3A.3.2.3.1.1		3A.3.2.3.2	3A.3.2.3.2	3A.3.2.4.2.2	3A.3.2.4.2.1
Basemat	3A.3.2.3.1.1	3A.3.2.3.2	3A.3.2.3.2	3A.3.2.3.2	3A.3.2.4.2.2	3A.3.2.4.2.1
Columns	3A.3.2.3.1.1/ 3A.3.2.3.3.1	3A.3.2.3.1.2/ 3A.3.2.3.3.1				
Downcomers	3A.3.2.3.1.1/ 3A.3.2.3.3.1	3A.3.2.3.1.2/ 3A.3.2.3.3.1			3A.3.2.4.1.2/ 3A.3.2.4.3.1	3A.3.2.4.1.1/ 3A.3.2.4.3.2
Downcomers bracing system			3A.3.2.3.1.3/ 3A.3.2.3.3.1	3A.3.2.3.1.4/ 3A.3.2.3.3.1	3A.3.2.4.1.2/ 3A.3.2.4.3.1	3A.3.2.4.1.1/ 3A.3.2.4.3.2
SRV system	3A.3.2.3.1.1/ 3A.3.2.3.3.1	3A.3.2.3.1.2/ 3A.3.2.3.3.1			3A.3.2.4.1.2/ 3A.3.2.4.3.1	3A.3.2.4.1.1/ 3A.3.2.4.3.2

Note: Numbers refer to section of Appendix 3A.

Table 3A.3.2-2

CGS Data for Loss-of-Coolant Accident
Water Jet Analysis

Unit cell diameter	40.87 in.
Unit cell depth	354.0 in.
Downcomer inner radius	13.625 in.
Downcomer submergence	144.0 in.
Downcomer water clearing velocity time history	Figure 3A.3.2-2

Table 3A.3.2-3

CGS Data for Vent Clearing And Pool Swell Analysis

Drywell	
1. Temperature (initial)	135°F
2. Drywell pressure transient	Table 3A.3.2-5
3. Relative humidity	0%
Suppression Chamber	
1. Free air volume (maximum)	147,290 ft^3
2. Net suppression pool surface area	4520 ft^2
3. Pressure (initial)	0.7 psig
4. Air specific heat ratio	1.4[a]/1.2[b]
Downcomer vent system	
1. Submergence (minimum/maximum)	11 ft-8 in./12 ft[a]
2. Nominal diameter	2 ft
3. Number of vents	102
4. Vent exit area	321 ft^2
5. Vent loss coefficient	1.9

[a] Value used to determine maximum pool swell elevation.

Table 3A.3.2-4

Results from Loss-of-Coolant Accident
Bubble Charging Analysis for CGS

	Downcomers		
	Inner Radius	Middle Radius	Outer Radius
Bubble coalescence time (sec)[a]	0.09	0.16	0.24
Bubble radius at coalescence (ft)	2.12	2.77	3.41

[a] Times represent time after vents have cleared.

Table 3A.3.2-5

CGS Drywell Pressure as a Function of Time for Loss-of-Coolant Accident[a]
(Effects of Pipe Inventory and Subcooling Included)

Time After Loss-of-Coolant Accident (sec)	Drywell Pressure (psia)
0.0	15.45
0.00159	15.32
0.00171	15.30
0.00549	14.72
0.0641	17.61
0.127	20.18
0.252	24.83
0.502	33.27
0.720	35.69
0.740	35.42
1.099	35.11
1.537	35.84
1.568	35.92
2.037	36.00

[a] See Reference 3A.3.2-22.

Table 3A.3.2-6

Results of Pool Swell Analysis for CGS

Vent clearing time[a] - t_c	0.65 sec
Pool water surface velocity[b] at time t_c	5.3 ft/sec
Time of maximum pool swell velocity	1.12 sec
Maximum pool swell velocity[b]	28.7 ft/sec
Time of maximum pool height[a]	1.48 sec
Maximum pool swell height (H_{max})	18.0 ft
Ratio of H_{max} to H_o (downcomer submergence)	1.5
Maximum air bubble pressure	35.75 psia
Maximum wetwell airspace pressure	47.55 psia
Maximum pool swell elevation	484 ft 4.75 in. msl
Pool swell termination[a]	1.48 sec

[a] Times represent time after LOCA initiation.
[b] Does not include velocity multiplier of 1.1.

Table 3A.3.2-7

CGS Plant Parameters for
Loss-of-Coolant Accident Transient Analysis

1. Drywell	
a. Free air volume	200,540 ft^3
b. Temperature (initial)	135°F
c. Pressure (initial)	0.75 psig
d Relative humidity	50%
2. Wetwell	
a. Free air volume	144,184 ft^3
b. Water volume[a]	107,850 ft^3
c. Pool temperature (initial)	90°F
d. Pressure (initial)	0.75 psig
e. Relative humidity	100%
3. Break area	
a. Design basis accident (DBA) - recirculation line	3.106 ft^2
b. DBA - steam line	3.92 ft^2
c. Intermediate break	0.1 ft^2
4. Main vent	
a. Maximum submergence	12 ft
b. Nominal diameter	2 ft
c. Number of vents	102[b]
d. Vent entrance flow area	304.6 ft^2
e. Downcomer loss factor	1.9

[a] Water volume
[b] Refer to Section 3A.3.2.2 for a discussion of the effect of capping three downcomers.

Table 3A.3.2-8

Short-Term Loss-of-Coolant Accident Loads
on Structures Below Elevation 454.4 ft

Structure	Radial Location r of Geometric Center of the Structure or Segment of Structure			
	Zone I $0 \le r < 2.3R$		Zone II $2.3R \le r < 5.0R$	
	p_r max (psi)	p_v max (psi)	p_r max (psi)	p_v max (psi)
42 in. diameter vertical column			+2	
12 in. diameter vertical SRV line	±20 inner row		+2 outer row	
Pipes and Supports				
Diameter[a] > 12 in. (X-31,32,34,35,36)	±60	+212	+6	-45
Diameter[a] ≤ 12 in. (X-33,100,4 in. FPC, quencher arm)	±60	+100	+6	-25

[a] For noncylindrical structures, the diameter of a cylinder circumscribing the cross section of the structure is used.

Notes:

1. Vertical load is positive in the downward direction. Radial load is positive in the radially outward direction from the axis of symmetry of the downcomer.

2. The vertical distribution associated with the tabulated peak values is shown in Figure 3A.3.2-18. The distribution in the radial direction in each zone is uniform and is aximsymmetric in the circumferential direction.

3. Long structures are divided into smaller segments, L ≤ D; D being the diameter of the structure, and L being the segment length.

Table 3A.3.2-8

Short-Term Loss-of-Coolant Accident Loads
on Structures Below Elevation 454.4 ft (Continued)

4. Radial or vertical load is calculated at the geometric center of each structure or segment (see Figure 3A.3.2-18) by multiplying the pressure value at the geometric center (obtained from this table) with the length and the diameter of the structure.

   For noncylindrical structures, diameter of the circumscribing cylinder is used.

5. Radial or vertical load has, in general, two components. One is parallel and the other is normal to the structure or segment. All components of load that are parallel to the structure or segment are neglected.

6. The radial location, r, of the structure or segment is taken from the nearest vent. Since the flow from vents occurs in-phase during water clearing/air charging phases of LOCA, the flow field calculations and the above specified loads have already accounted for the multi-vents effect. Therefore, effects of flow from other adjacent vents need not be added or subtracted.

7. The loads specified are equivalent static and utilize a DLF equal to 2.

Table 3A.3.2-9

Short-Term Loss-of-Coolant Accident Loads on
Structures Between Elevations 454 ft 4.75 in. and 484 ft 4.75 in.

Structures Located Between El. 454 ft 4.75 in. and El. 484 ft 4.75 in.	Equivalent Static Load		
	Pool Swell/ Impact ±Pψ (psi)	Pool Swell Fallback	Pool Swell/ Fallback
		Drag ±Pψ (psi)	Horizontal Lift ±Ph (psi)
I. Downcomer bracing truss		25	5
II. Platform at el. 472 ft 4 in.: grating perimeter members		8.4	25
III. Piping at 467 ft 9 in. and supports			
A. Horizontal portions of pipes			
a. X-48,118,117,47,26,63,49,101, X-23,24, X-4 (pipe and sleeve)	41	25	15
b. X-64,65	16	20	15
B. Inclined braces above penetrations		50	25
C. Horizontal supports below penetrations		60	25
IV. Penetration sleeves, pipe stubs, and electrical box protective structures			
a. X-51,66 sleeves for: X-81,82,83,84,116	209	25	5
b. X-87A	166	25	5
c. X-86A	62	25	5
d. X-88,87B,86B,116 (piping)		25	5
e. X-81,82,83,84 (piping except X-82e)	209	20	5
f. X-107A, X-107B (electrical box protective structures)	116	25	5

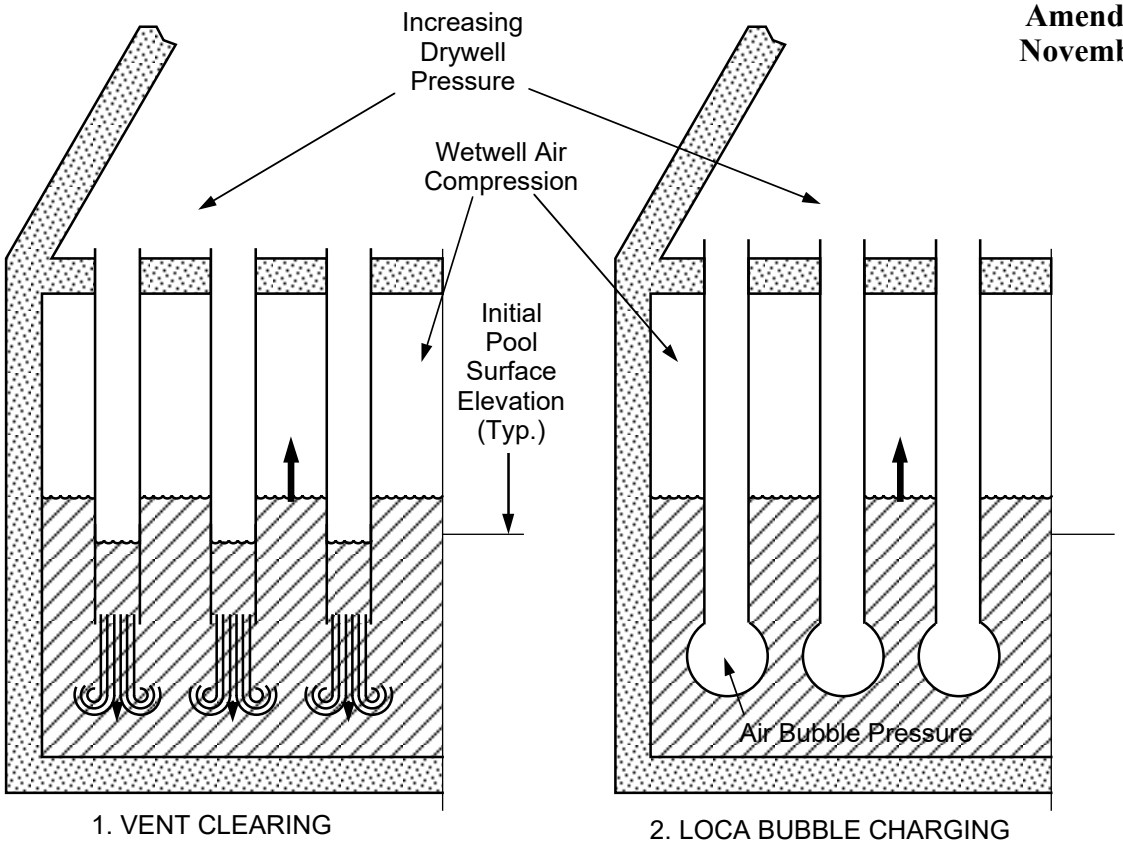

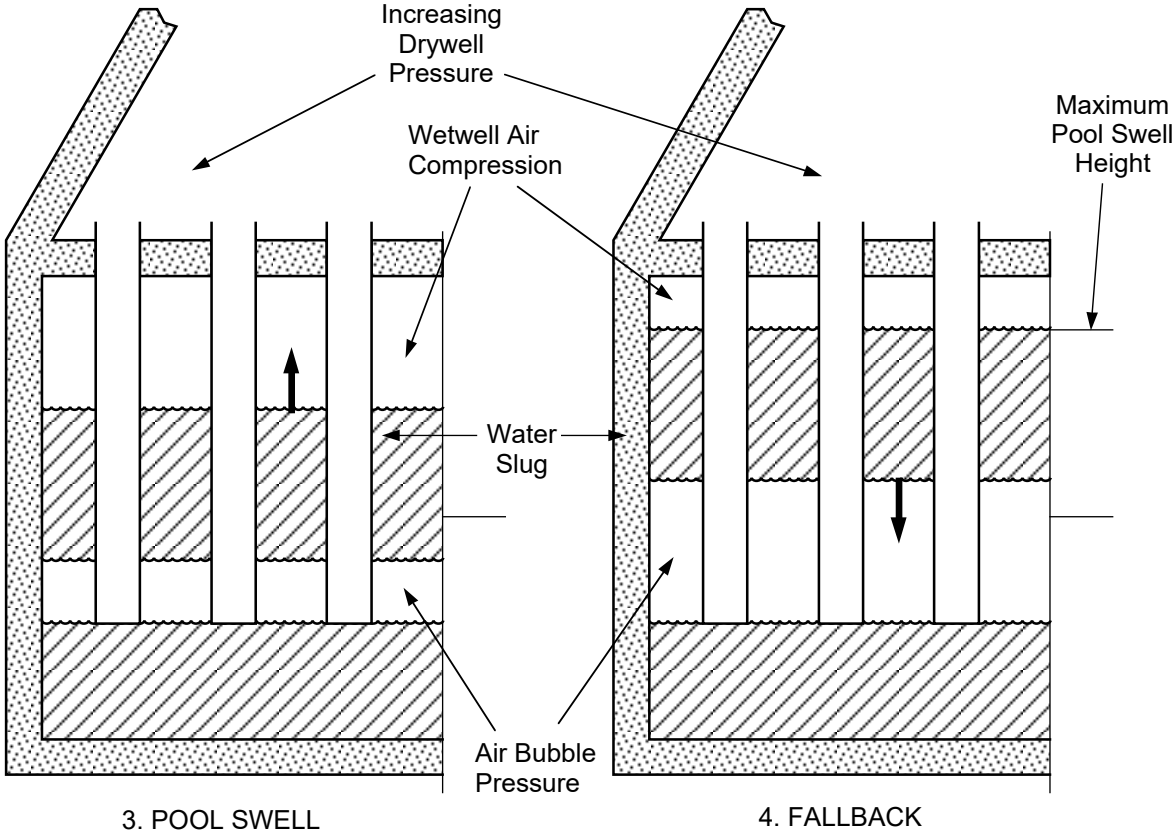

Columbia Generating Station **Final Safety Analysis Report**	**Short Term Hydrodynamic Processes Associated with a LOCA**
	Draw. No. 950021.76 | Rev. | Figure 3A.3.2-1

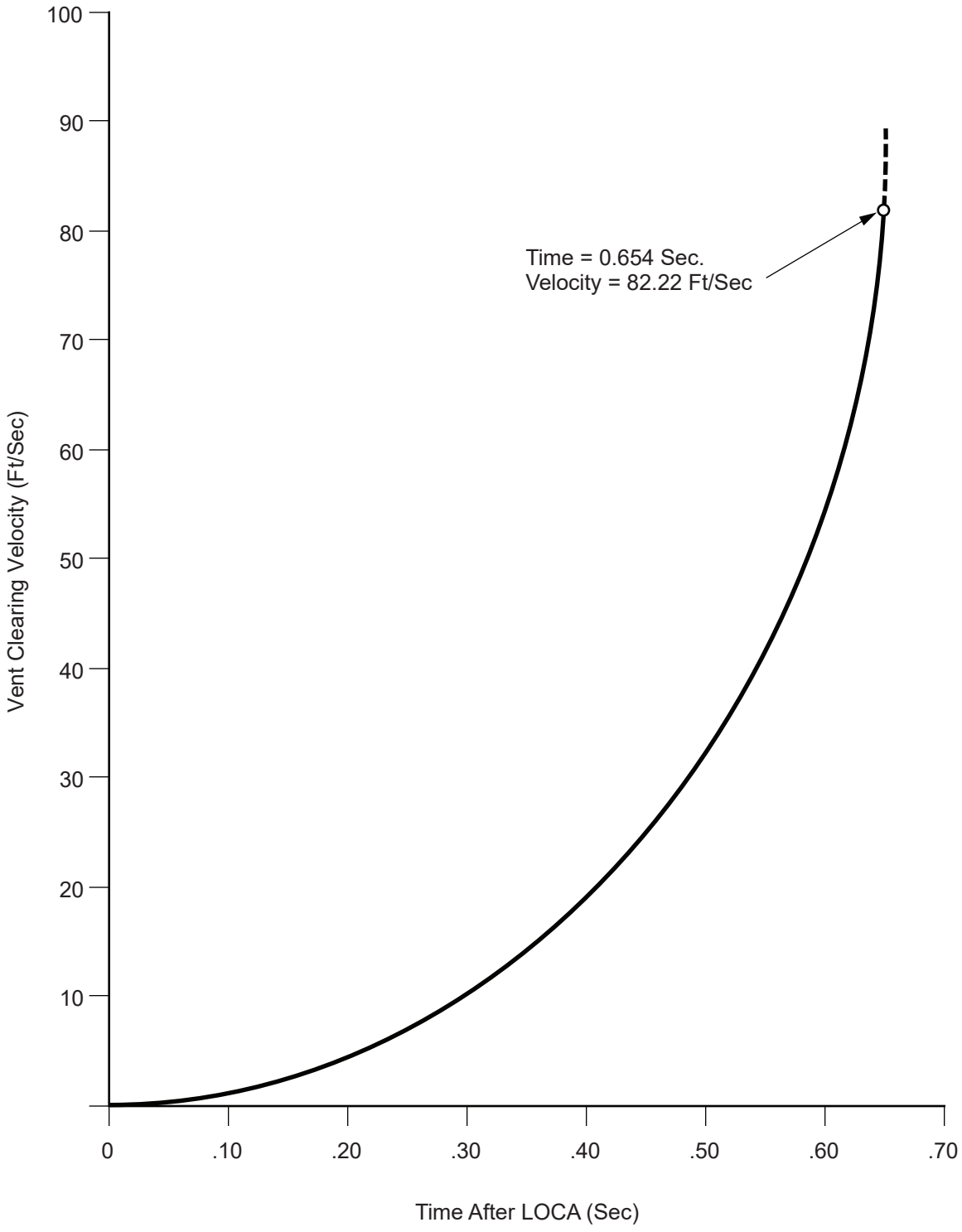

Columbia Generating Station Final Safety Analysis Report	Downcomer Vent Water Clearing Velocity Versus Time		
	Draw. No. 950021.77	Rev.	Figure 3A.3.2-2

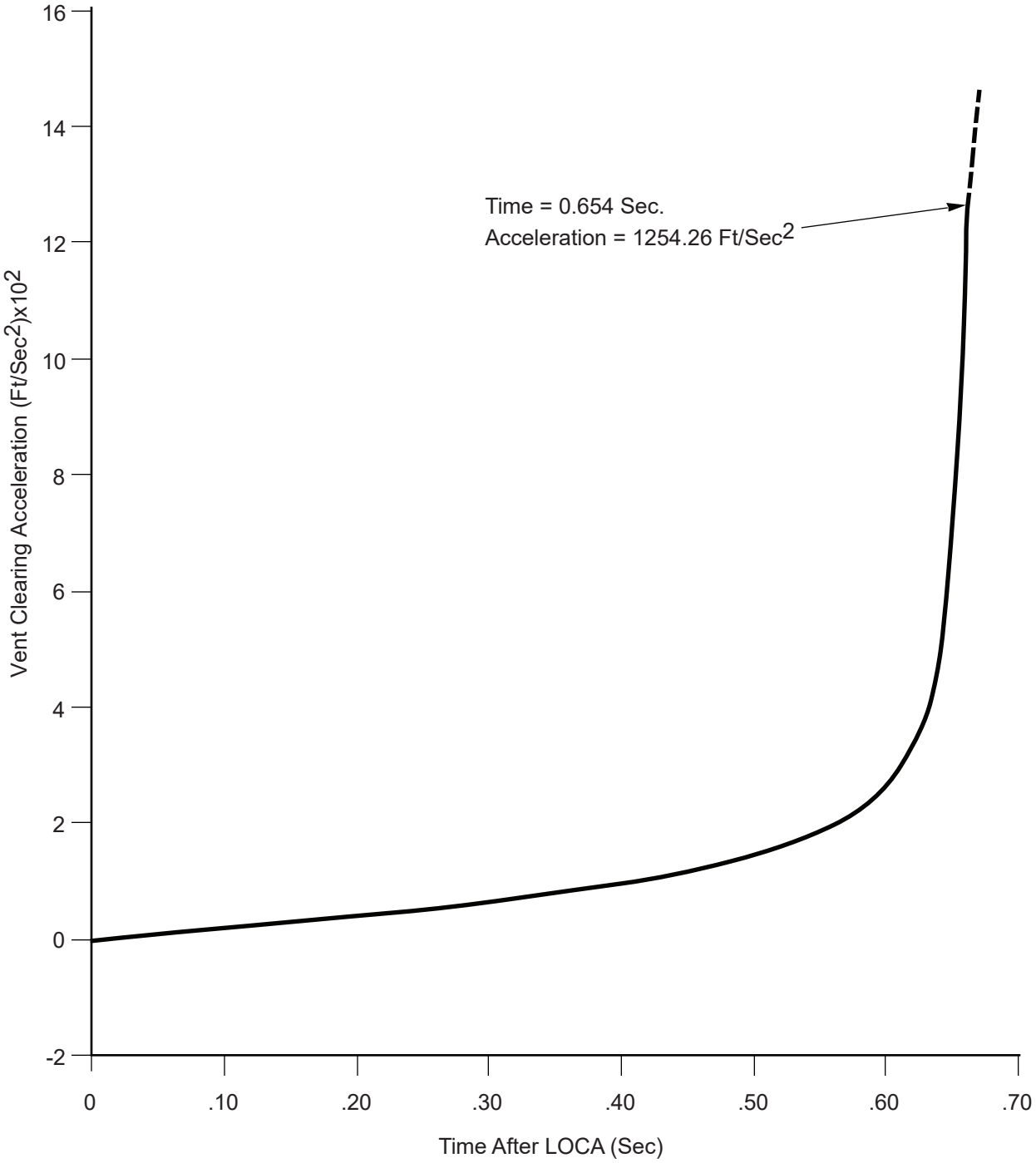

Columbia Generating Station Final Safety Analysis Report	Downcomer Vent Water Clearing Acceleration Versus Time		
	Draw. No. 950021.78	Rev.	Figure 3A.3.2-3

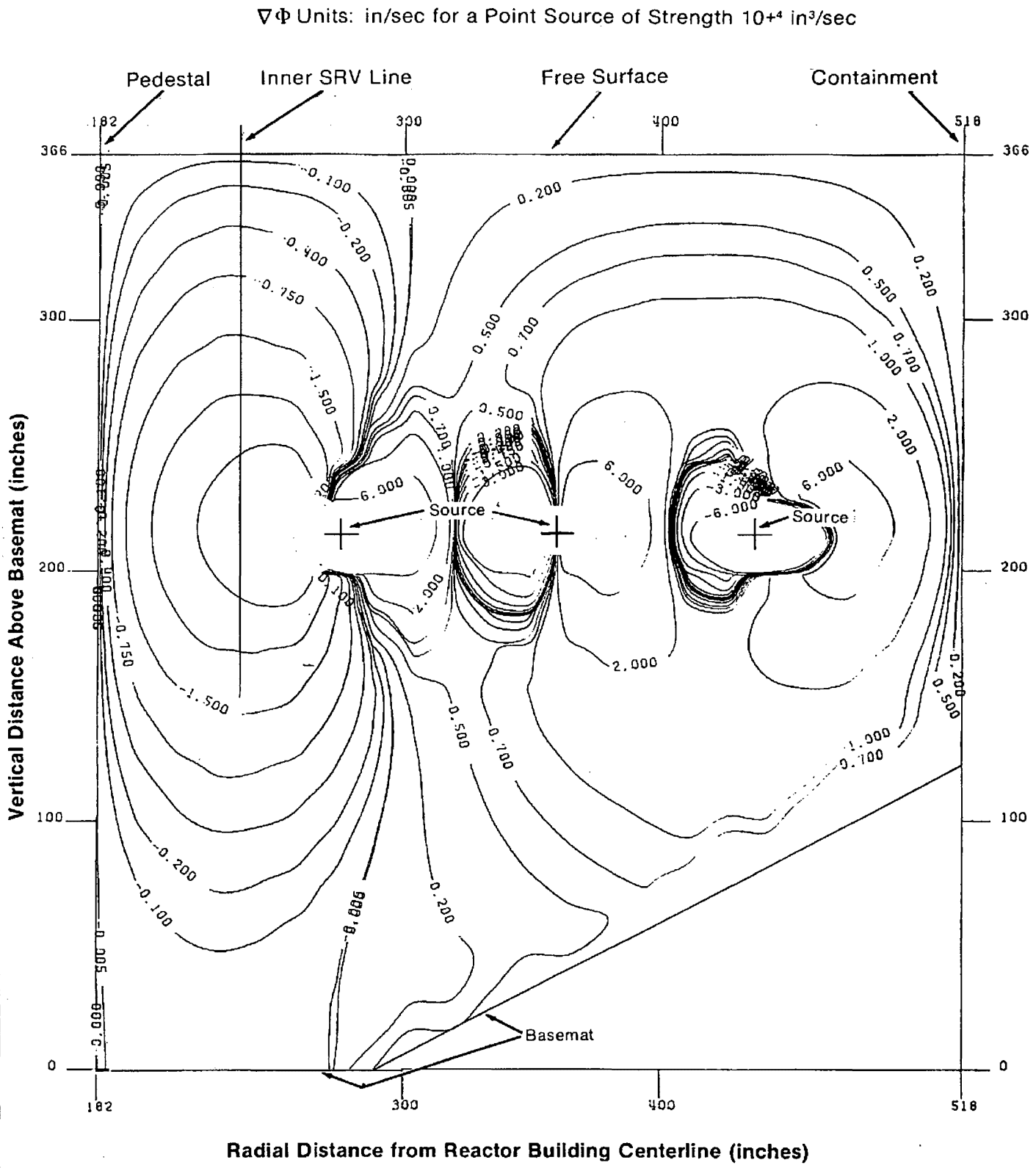

Columbia Generating Station Final Safety Analysis Report	**LOCA Bubble Charging Radial Component of ∇Φ in Radial Plane Containing Downcomers**		
	Draw. No. 020361.16	Rev.	Figure 3A.3.2-4

Form No. 960690

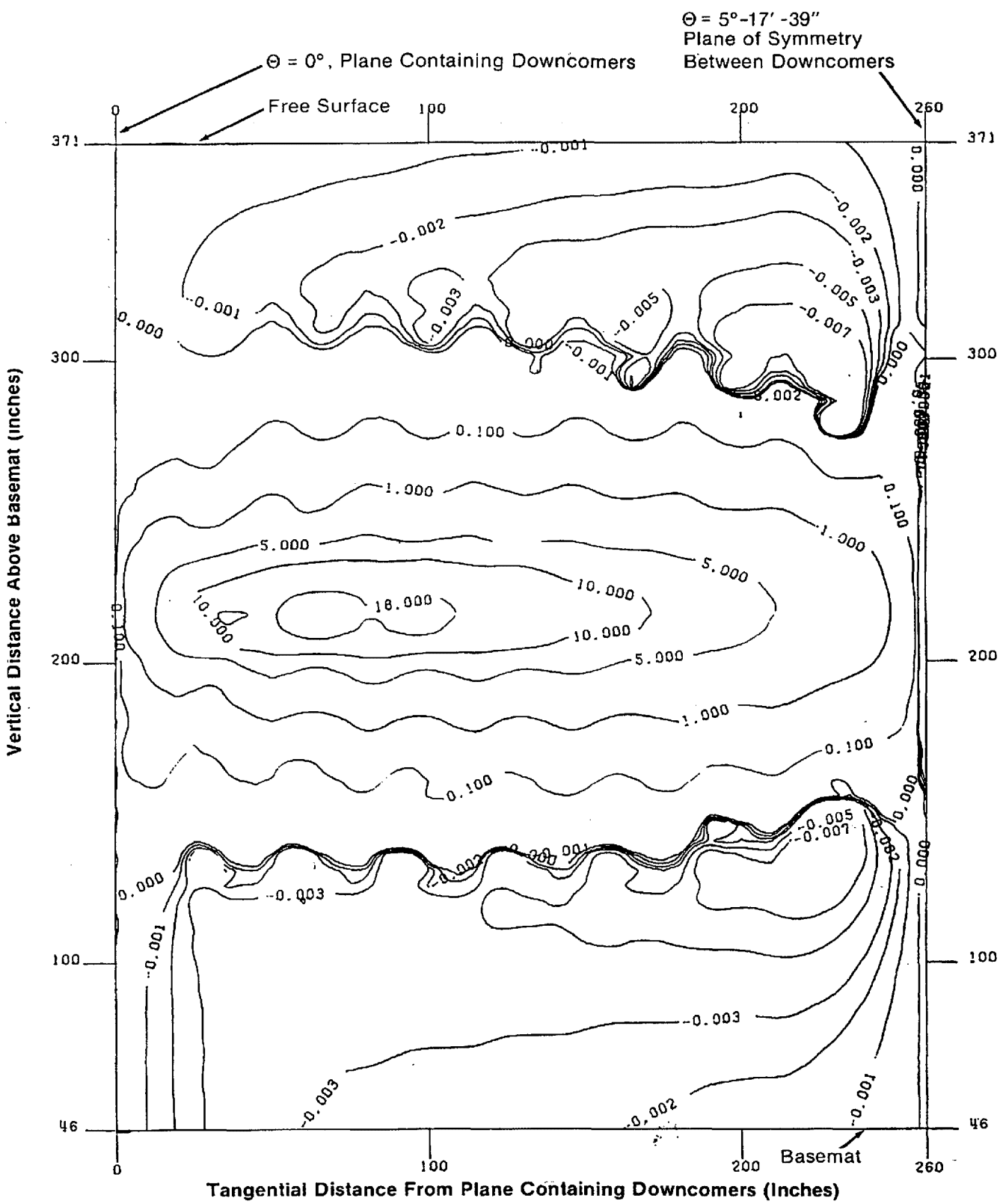

Columbia Generating Station Final Safety Analysis Report	LOCA Bubble Charging Tangential Component of ∇Φ in Vertical Cylindrical Surface Through Middle Downcomers		
	Draw. No. 020361.17	Rev.	Figure 3A.3.2-5

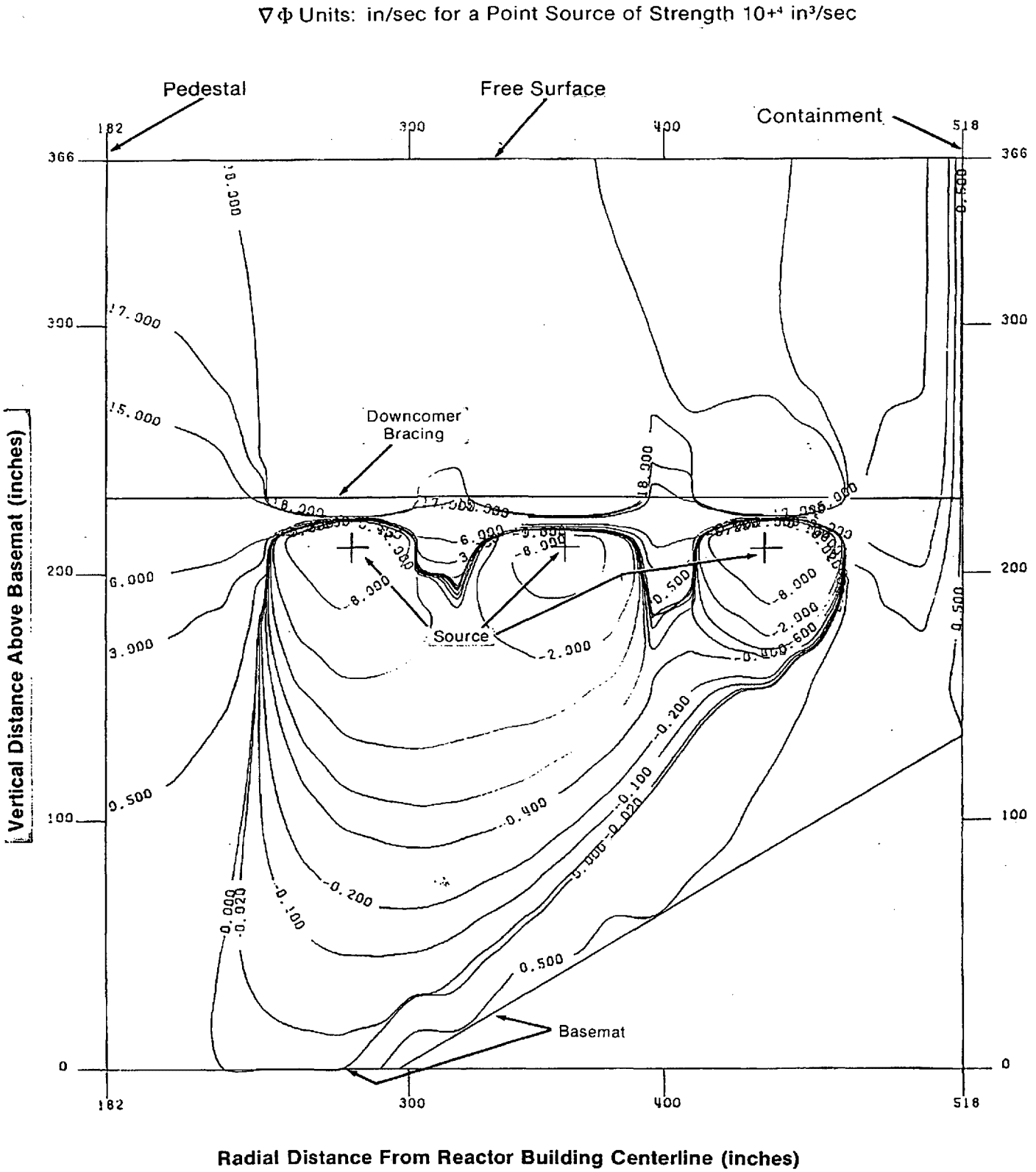

Columbia Generating Station Final Safety Analysis Report	LOCA Bubble Charging Vertical Component of ∇Φ in Radial Plane Containing Downcomers		
	Draw. No. 020361.18	Rev.	Figure 3A.3.2-6

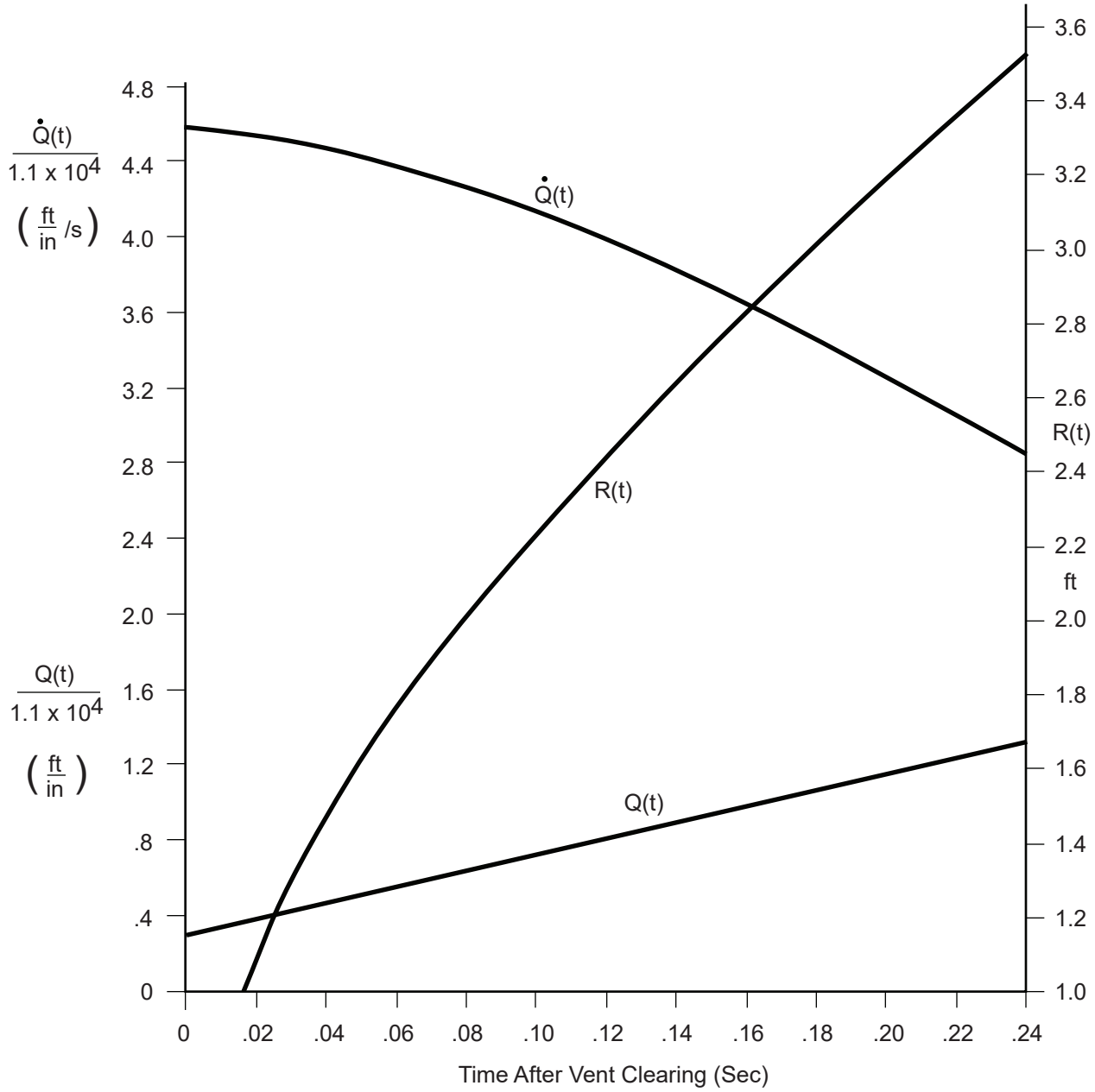

Columbia Generating Station **Final Safety Analysis Report**	**LOCA Bubble Radius and Source Strength Time Histories by PSAM Method**		
	Draw. No. 950021.79	Rev.	Figure 3A.3.2-7

Form No. 960690

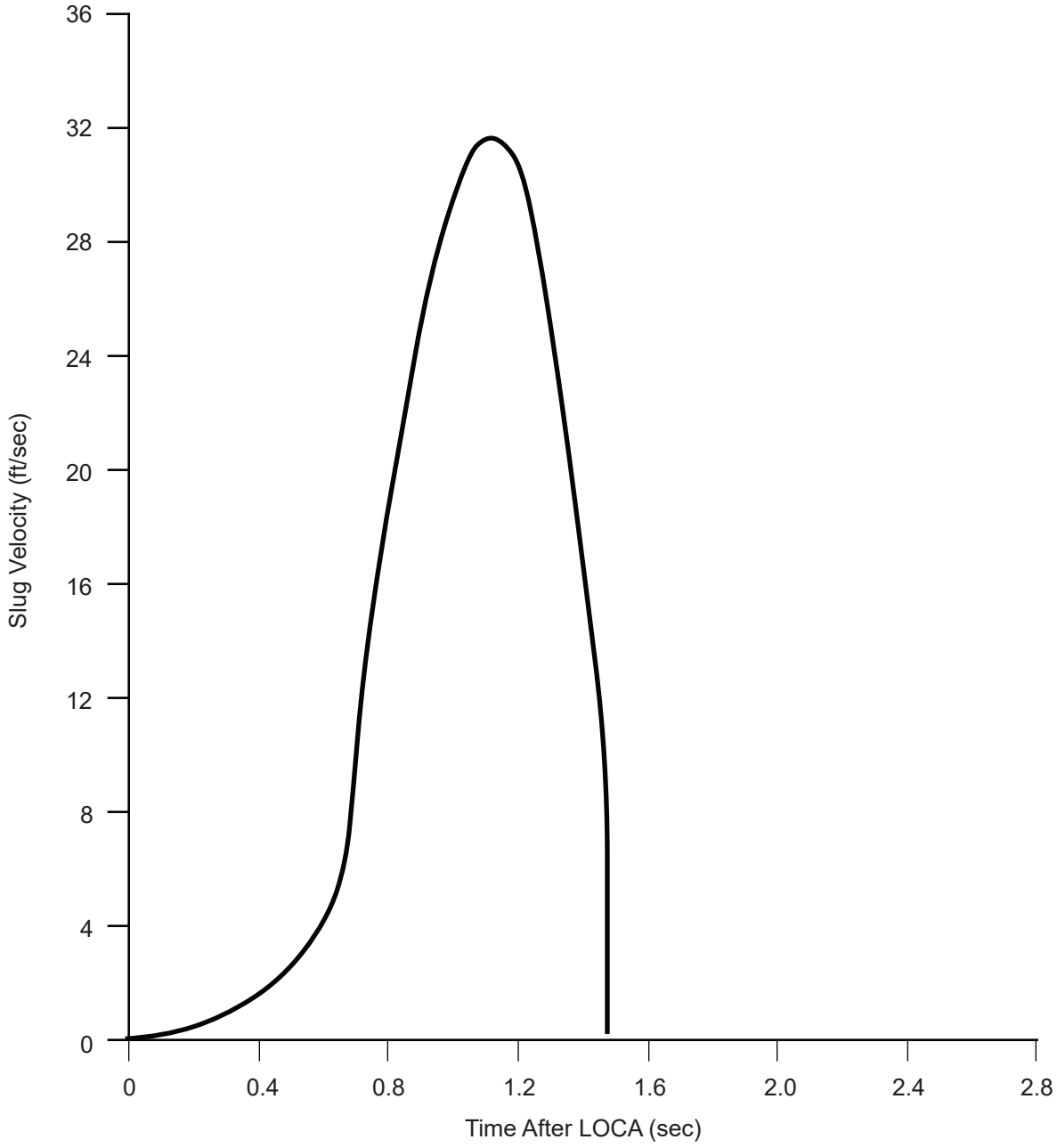

Columbia Generating Station
Final Safety Analysis Report

Pool Swell Water Slug Velocity Versus Time

Draw. No. 950021.80	Rev.	Figure 3A.3.2-8

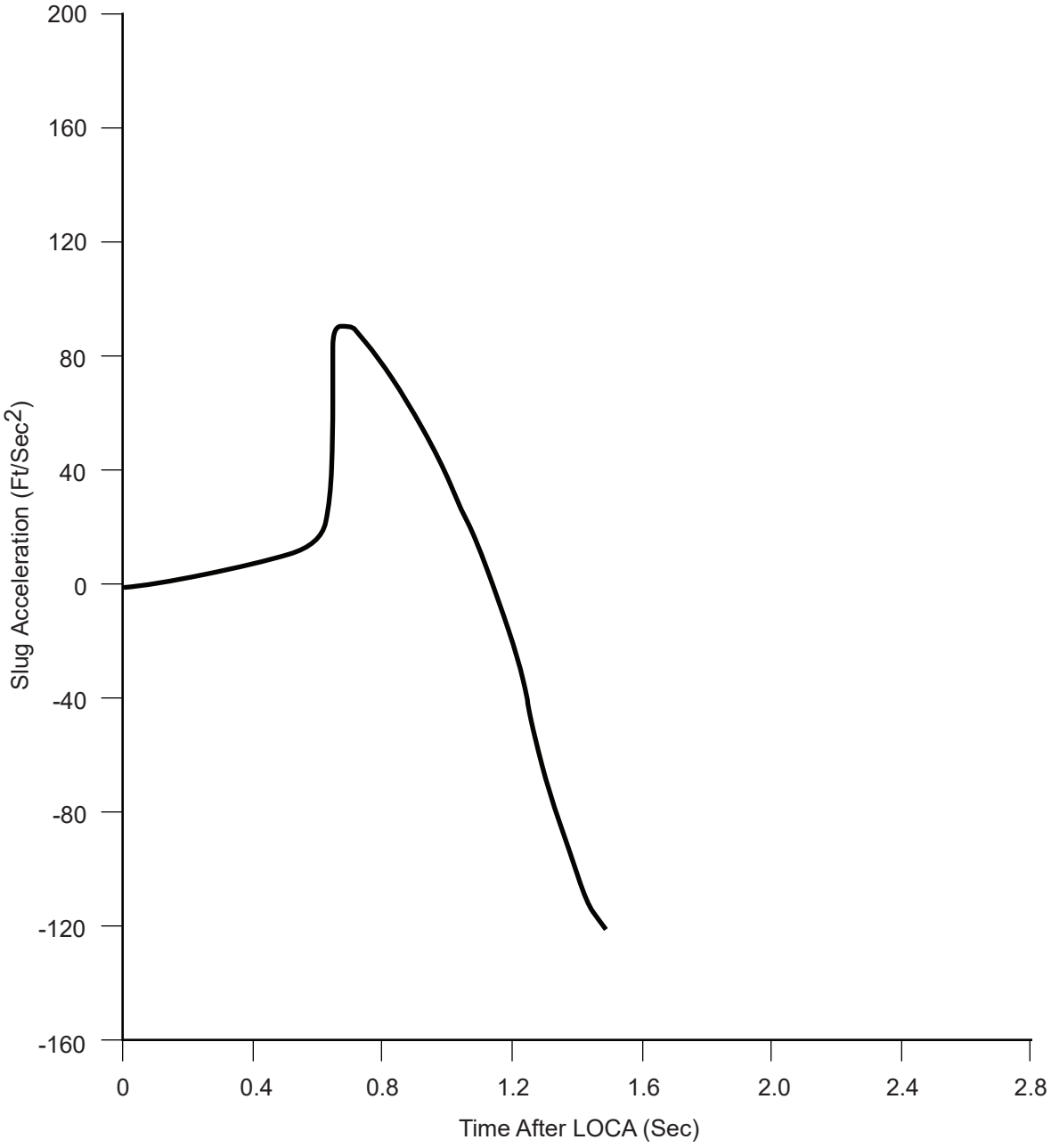

Columbia Generating Station
Final Safety Analysis Report

Pool Swell Water Slug Acceleration Versus Time

Draw. No. 950021.81	Rev.	Figure 3A.3.2-9

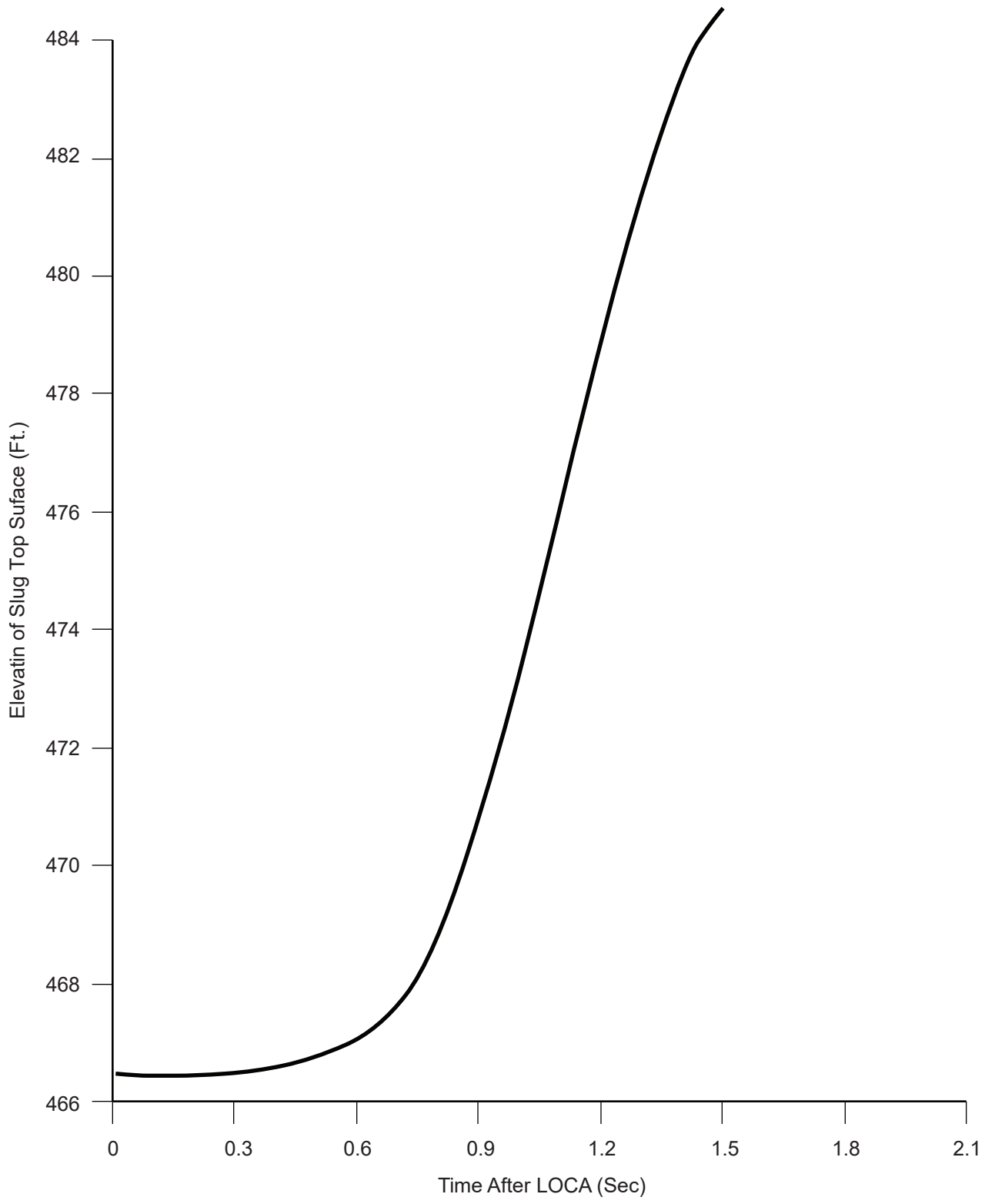

Columbia Generating Station Final Safety Analysis Report	Pool Swell Water Slug Elevation (Top Surface) Versus Time		
	Draw. No. 950021.82	Rev.	Figure 3A.3.2-10

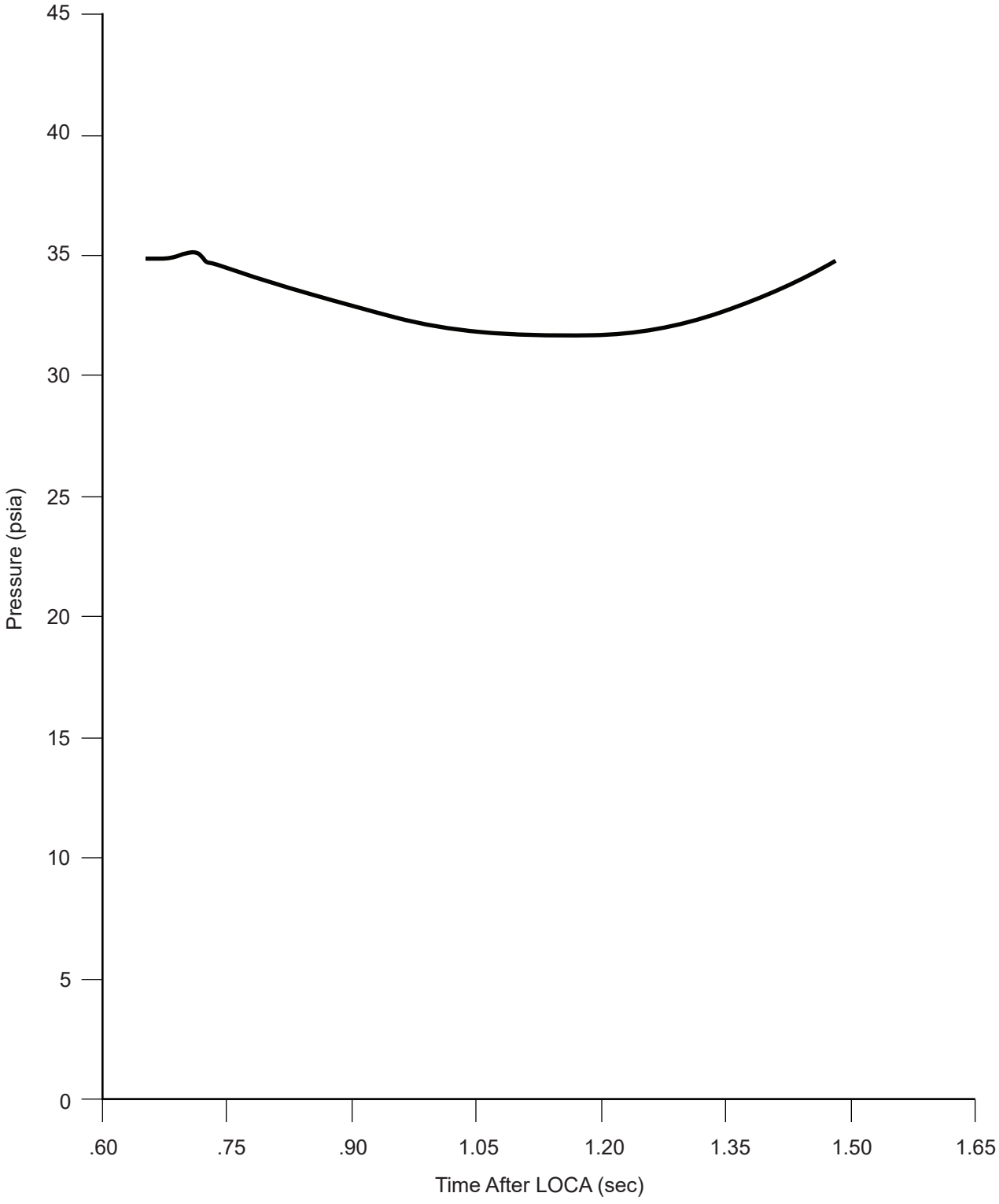

Columbia Generating Station
Final Safety Analysis Report

Pool Swell Air Bubble Pressure Versus Time

Draw. No. 950021.83	Rev.	Figure 3A.3.2-11

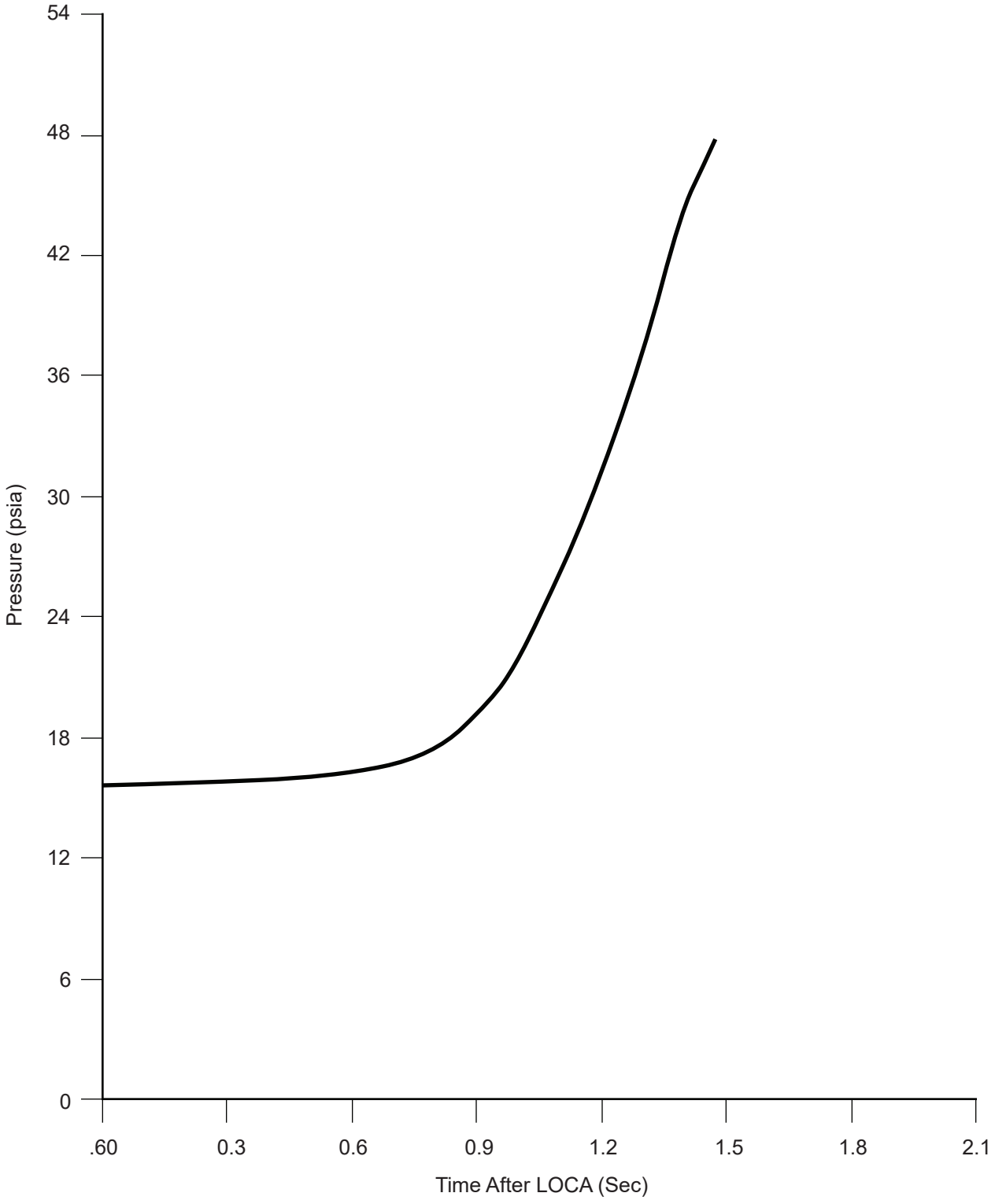

Columbia Generating Station
Final Safety Analysis Report

Pool Swell Wetwell Air Pressure Versus Time

Draw. No. 950021.84	Rev.	Figure 3A.3.2-12

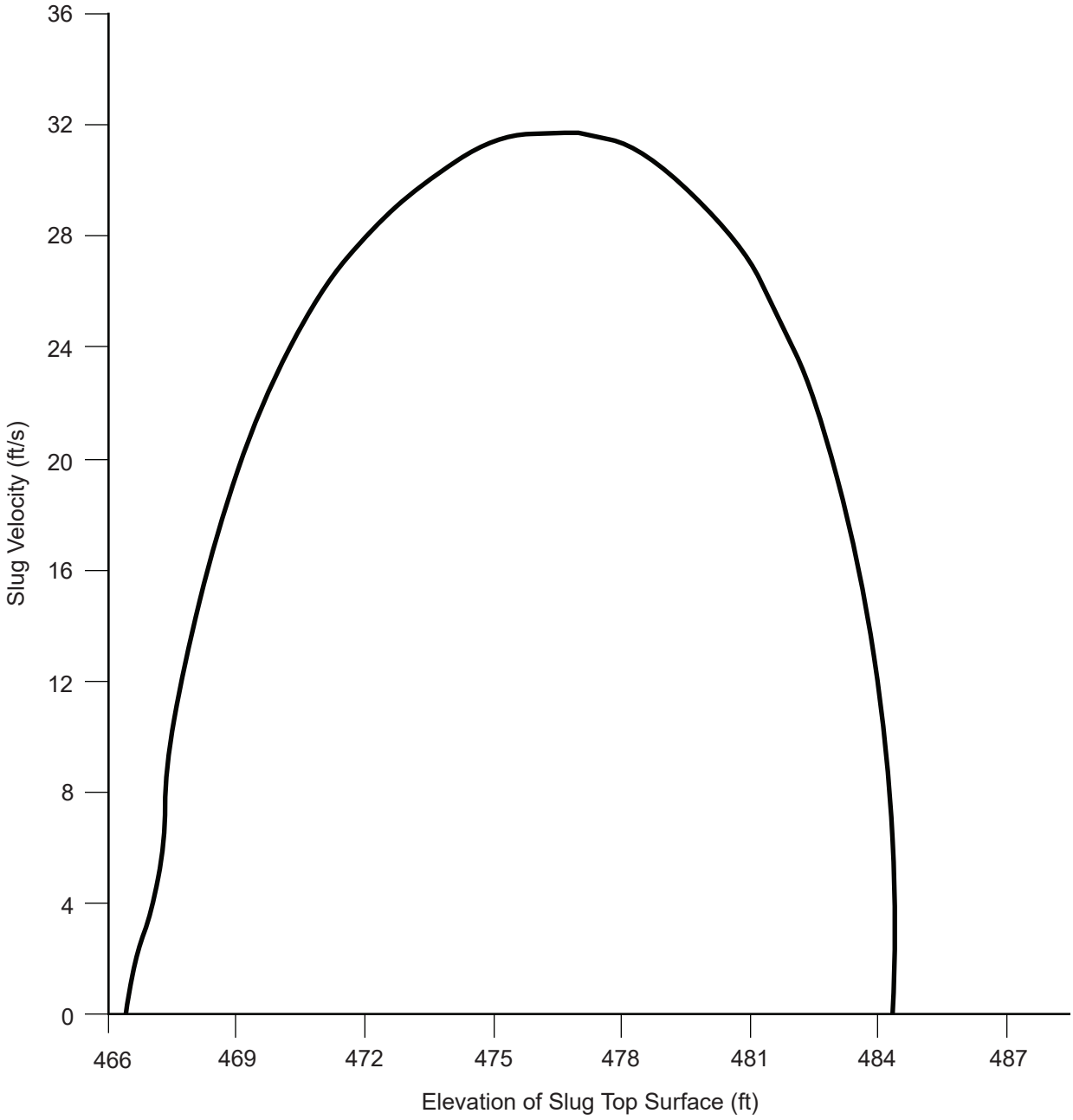

Columbia Generating Station Final Safety Analysis Report	**Pool Swell Water Slug Velocity Versus Elevation of Slug Top Surface**		
	Draw. No. 950021.85	Rev.	Figure 3A.3.2-13

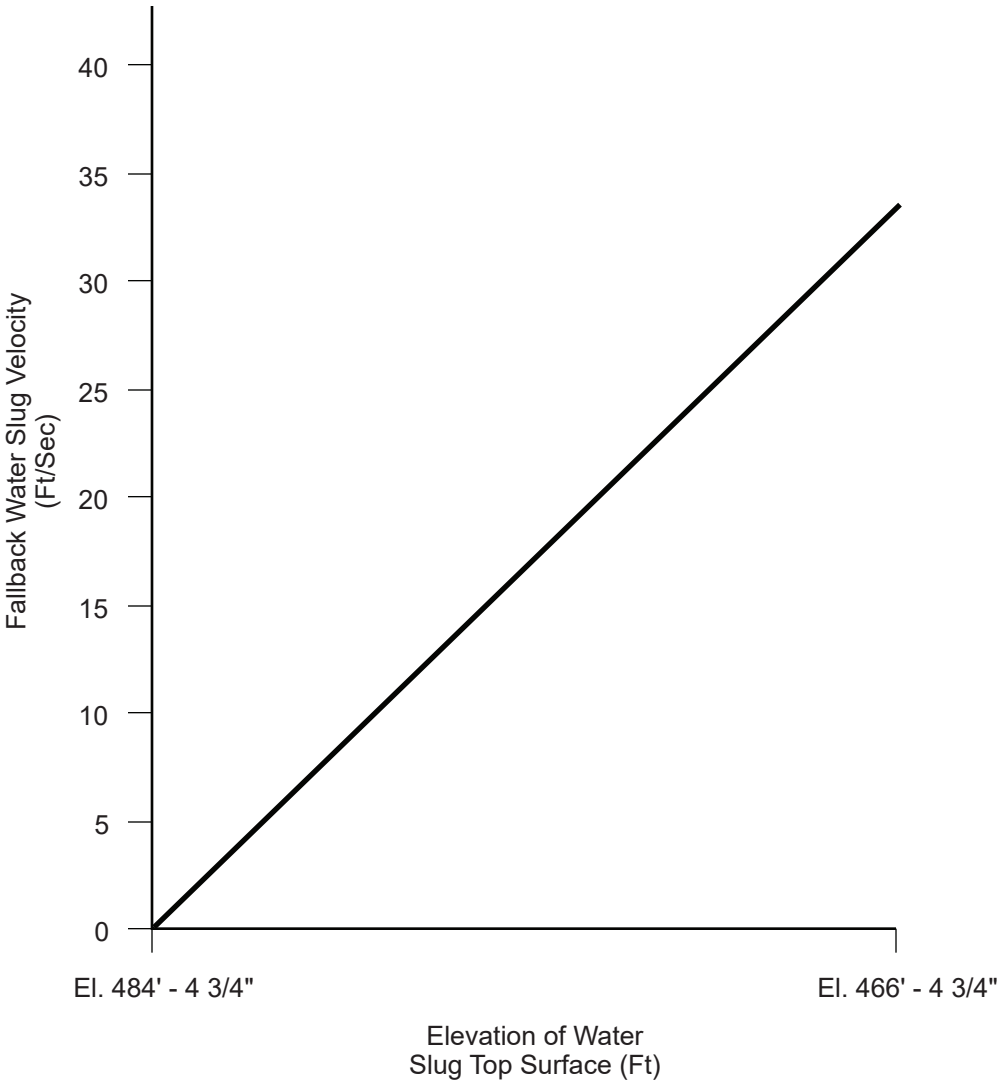

Columbia Generating Station Final Safety Analysis Report	**Fallback Water Slug Velocity Versus Elevation of Water Slug Top Surface**		
	Draw. No. 950021.86	Rev.	Figure 3A.3.2-14

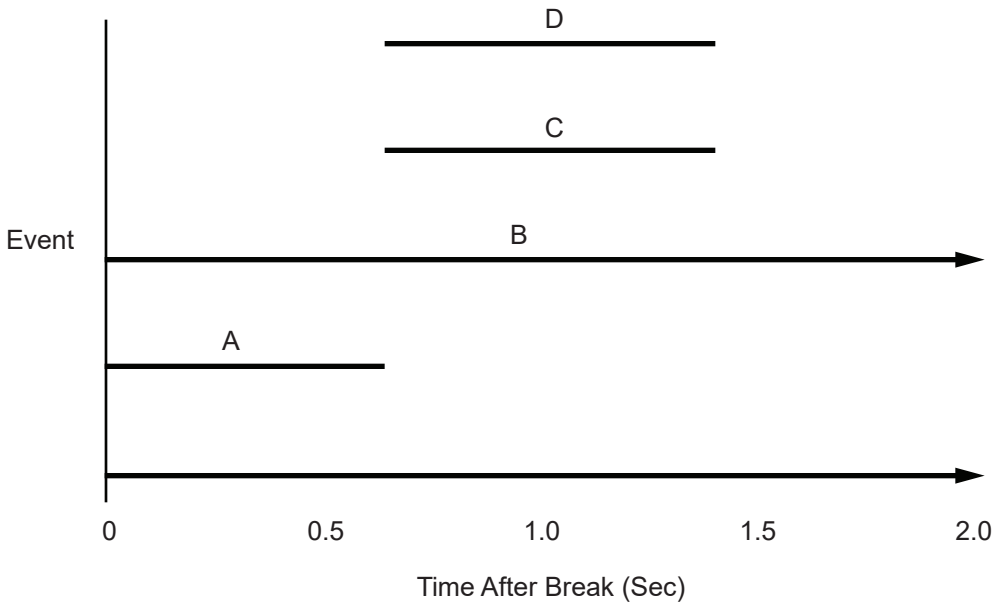

Event	Loading Phenomenon
A	Submerged Boundary Loads During Vent Clearing
B	Drywell Pressurization
C	Loads on Submerged Boundaries During Pool Swell
D	Wetwell Air Compression

Columbia Generating Station Final Safety Analysis Report	**LOCA Boundary Load Duration**		
	Draw. No. 950021.87	Rev.	Figure 3A.3.2-15

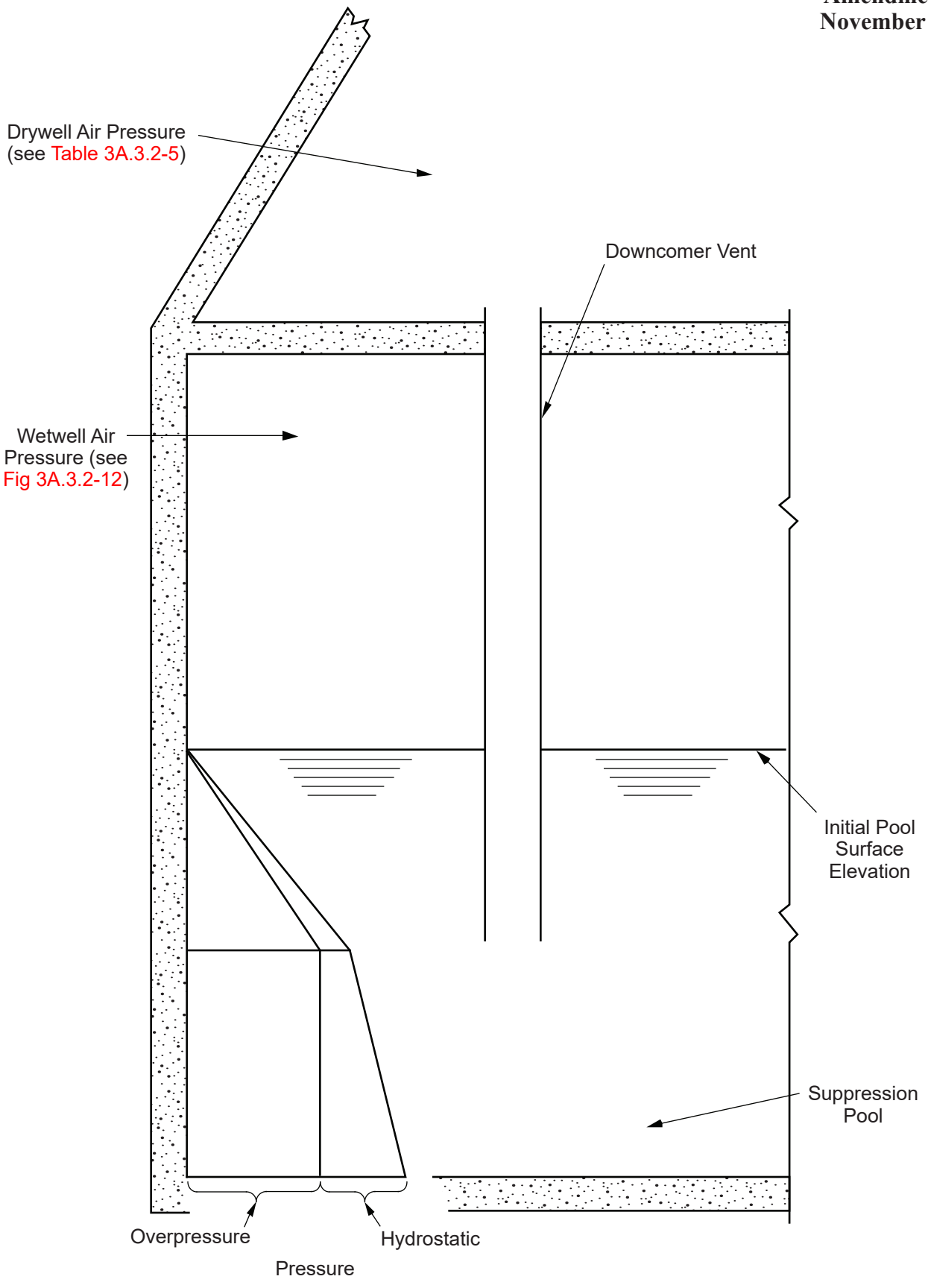

Columbia Generating Station Final Safety Analysis Report	LOCA Boundary Load Distribution During Vent Clearing		
	Draw. No. 950021.88	Rev.	Figure 3A.3.2-16

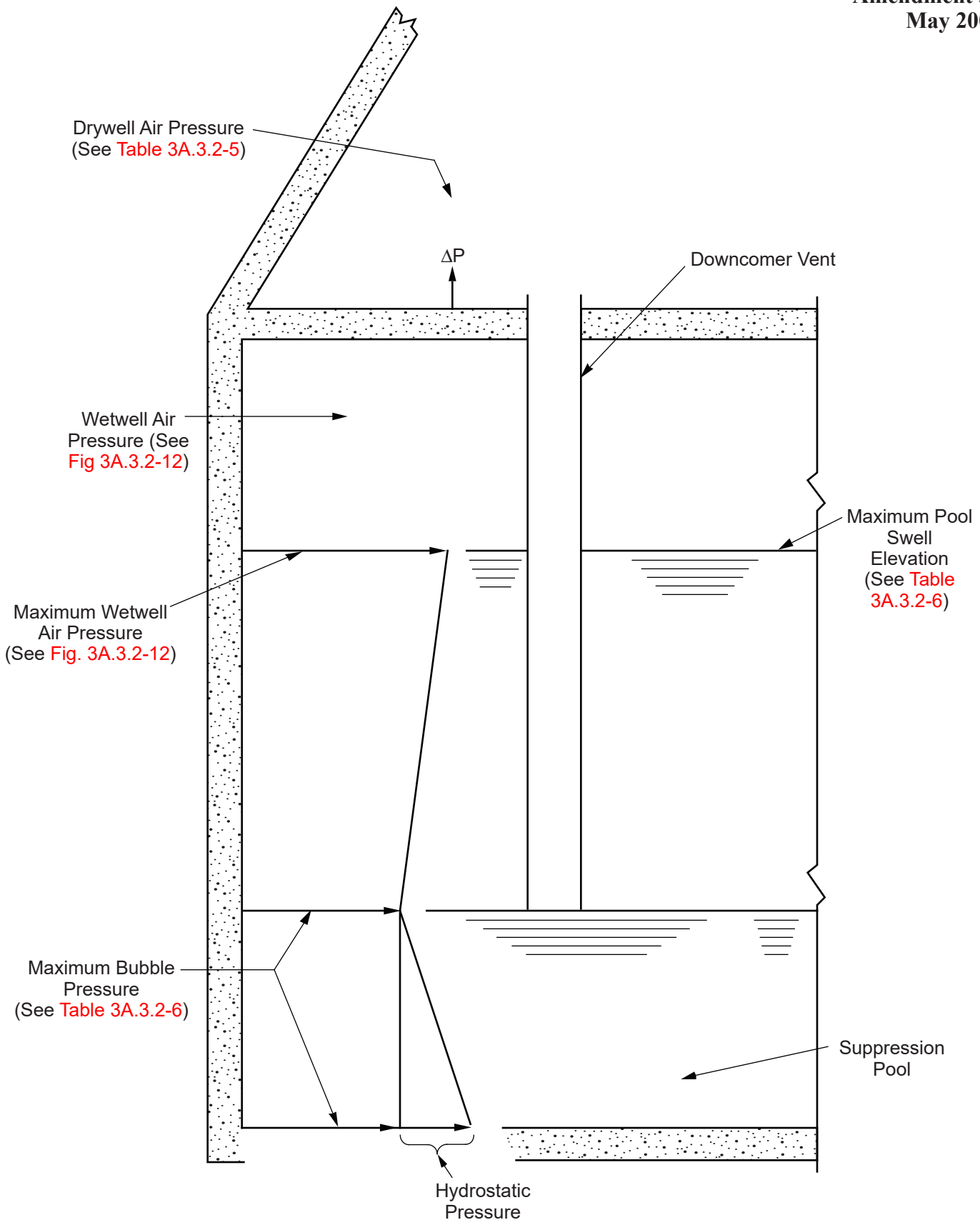

Columbia Generating Station Final Safety Analysis Report	LOCA Boundary Load Distribution During Pool Swell		
	Draw. No. 950021.89	Rev.	Figure 3A.3.2-17

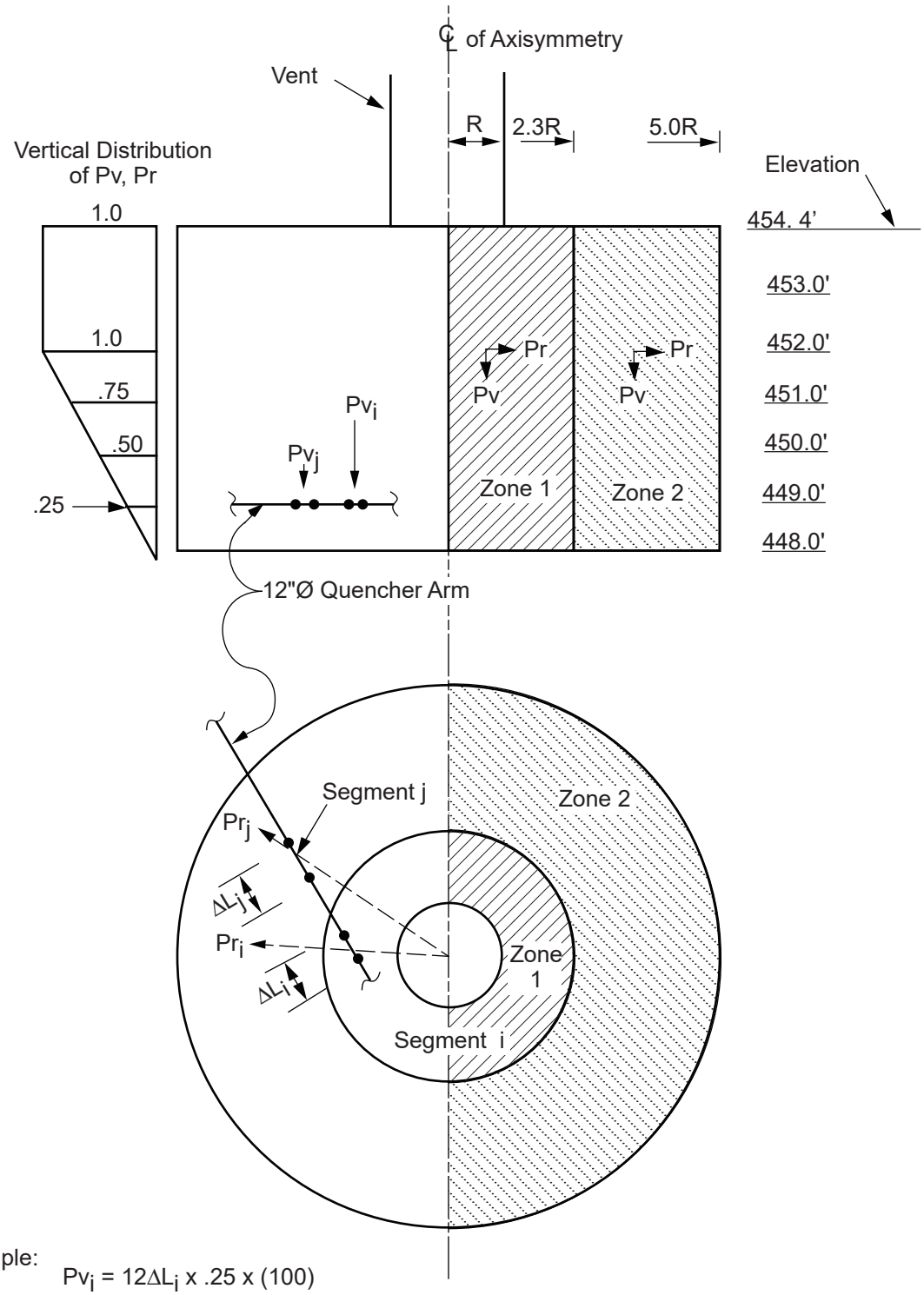

Example:

$Pv_i = 12\Delta L_i \times .25 \times (100)$
$Pr_i = 12\Delta L_i \times .25 \times (\pm 60)$
$Pv_j = 12\Delta L_j \times .25 \times (-25)$
$Pr_j = 12\Delta L_j \times .25 \times (6)$

Columbia Generating Station **Final Safety Analysis Report**	**Distribution of Short Term LOCA Loads on Structures Below El. 454.4 ft**		
	Draw. No. **950021.90**	Rev.	Figure **3A.3.2-18**

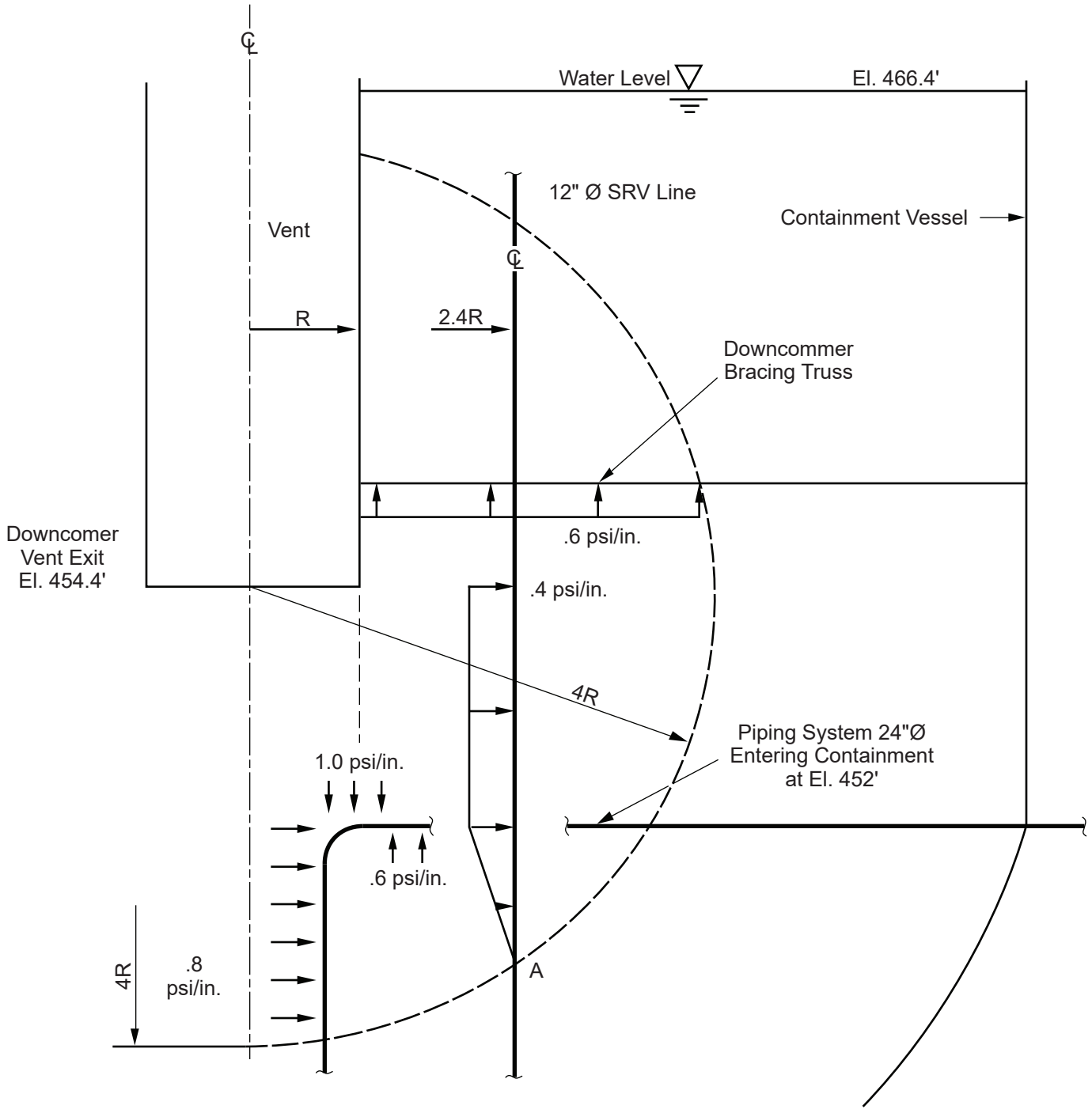

Columbia Generating Station **Final Safety Analysis Report**	**Pressure Gradients Across Submerged Structures Due to Chugging**		
	Draw. No. **950021.91**	Rev.	Figure **3A.3.2-19**

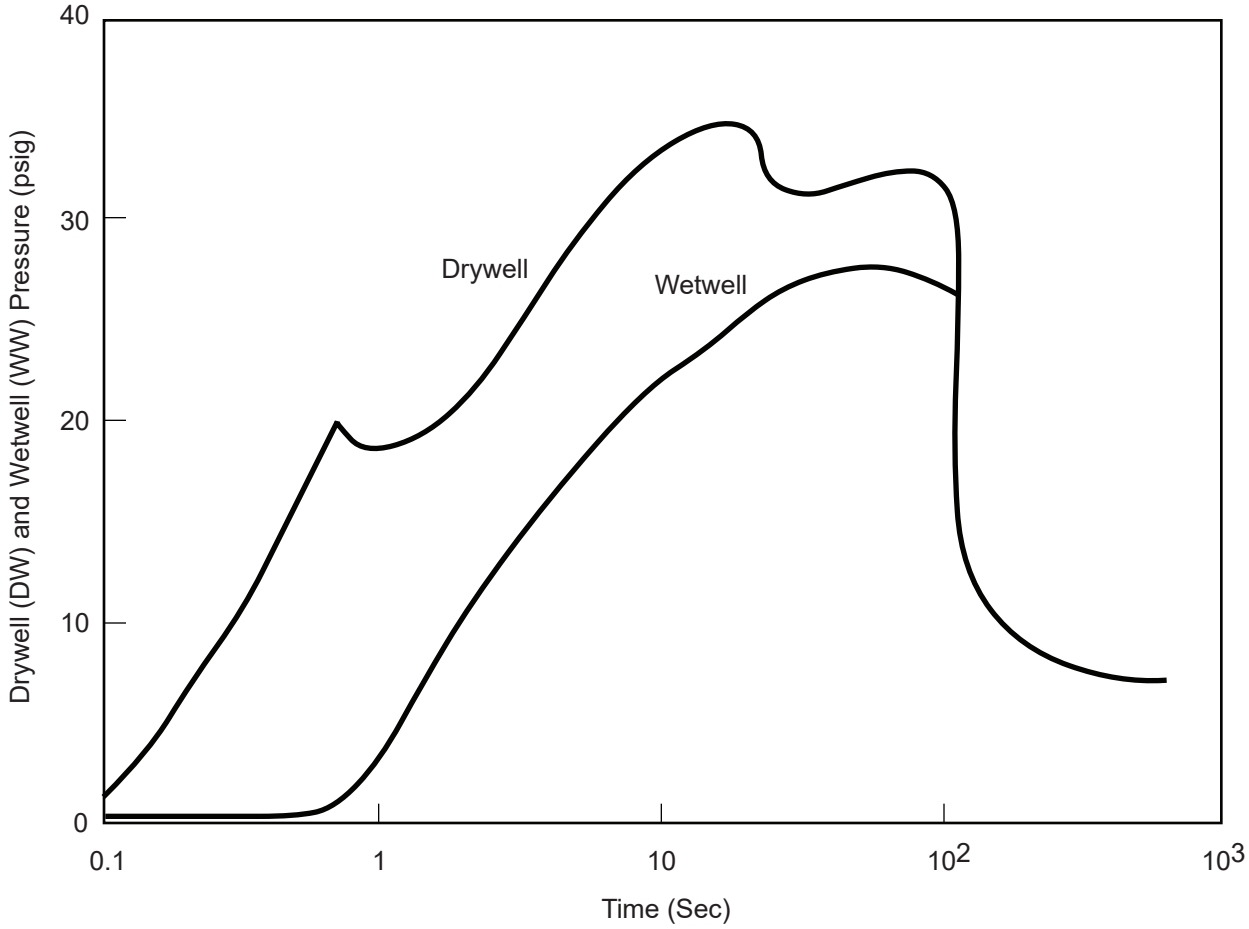

Columbia Generating Station Final Safety Analysis Report	Large Recirculation Line Break - Pressure Response - Minimum ECCS		
	Draw. No. 950021.92	Rev.	Figure 3A.3.2-20

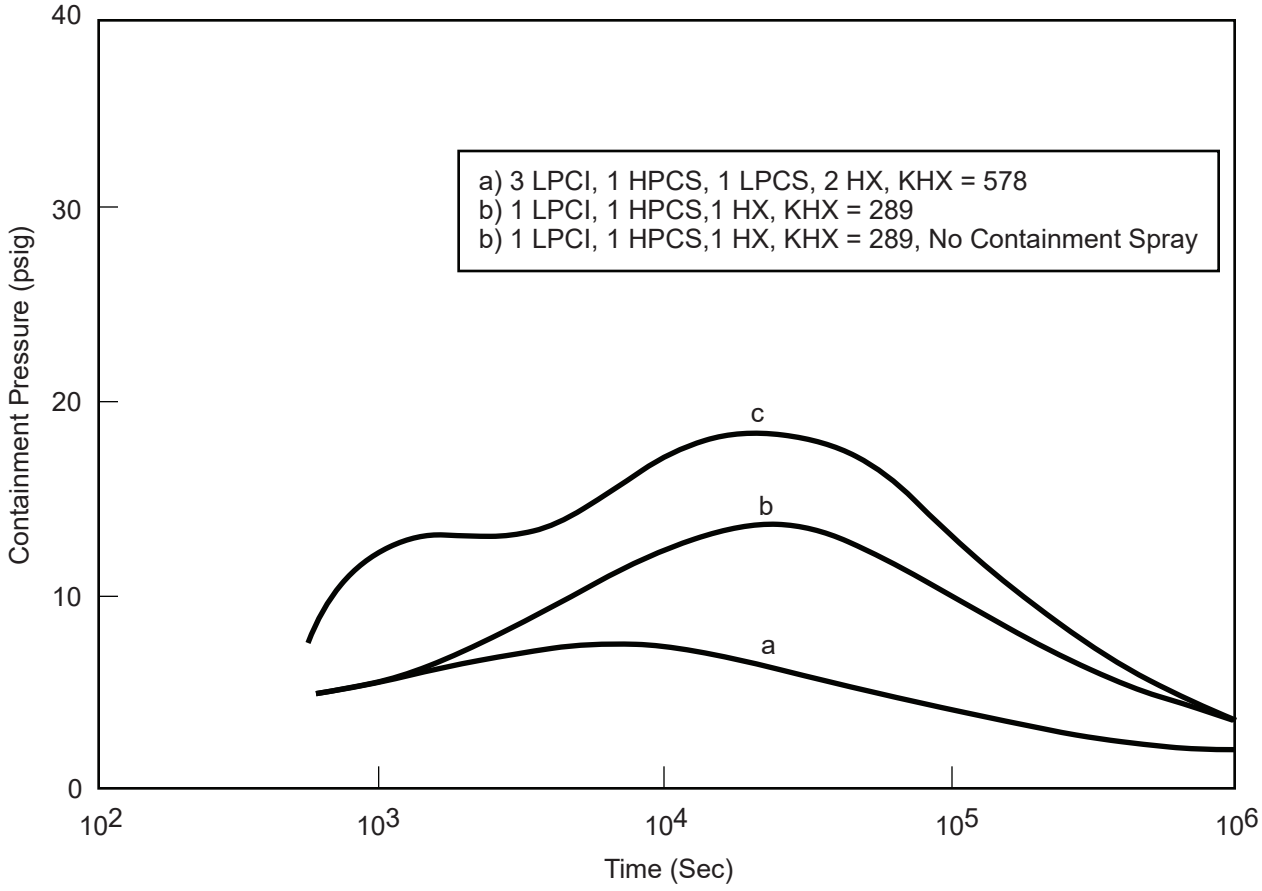

Columbia Generating Station Final Safety Analysis Report	**Containment Pressure Response for Large Recirculation Line Break - Cases A, B, and C**		
	Draw. No. 950021.93	Rev.	Figure 3A.3.2-21

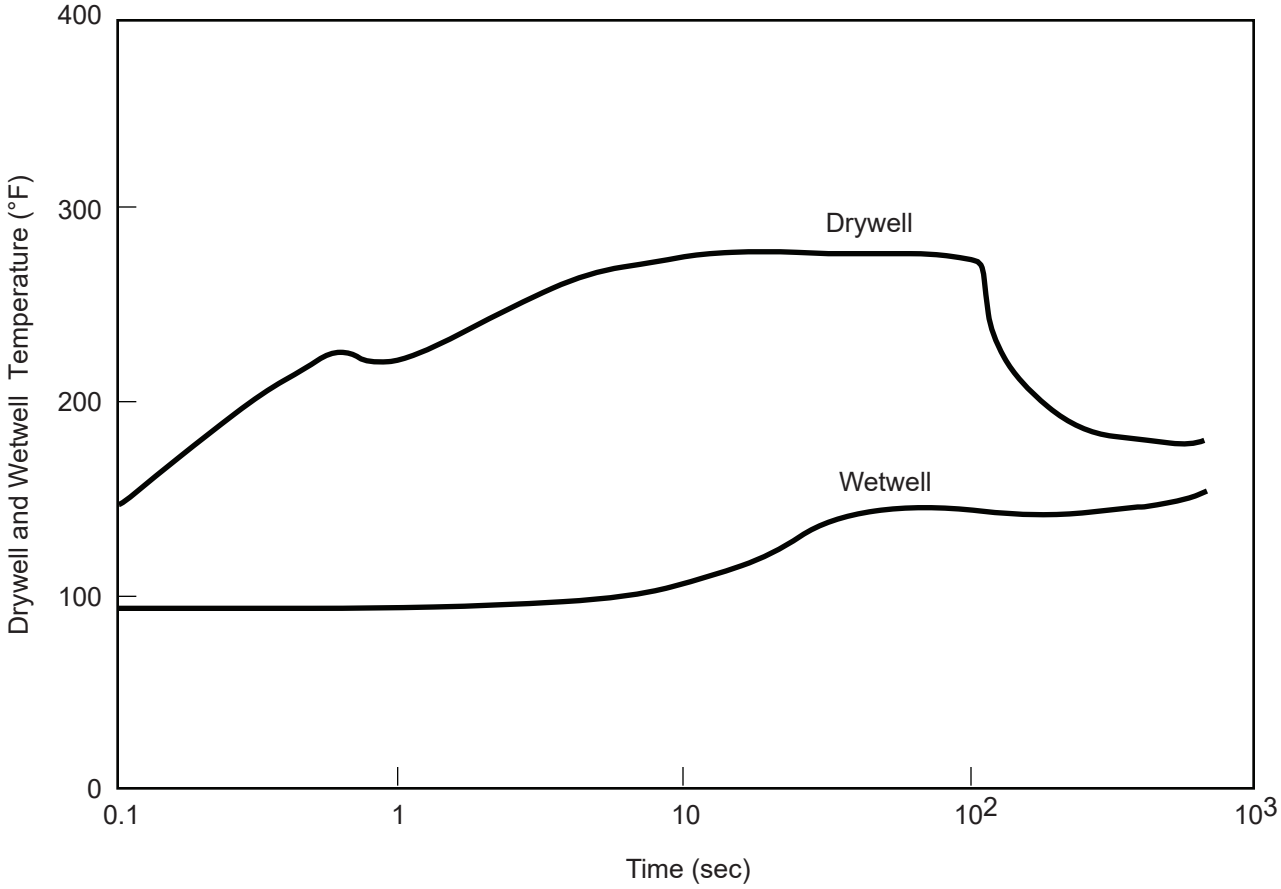

Columbia Generating Station Final Safety Analysis Report	Large Recirculation Line Break - Temperature Response		
	Draw. No. 950021.94	Rev.	Figure 3A.3.2-22

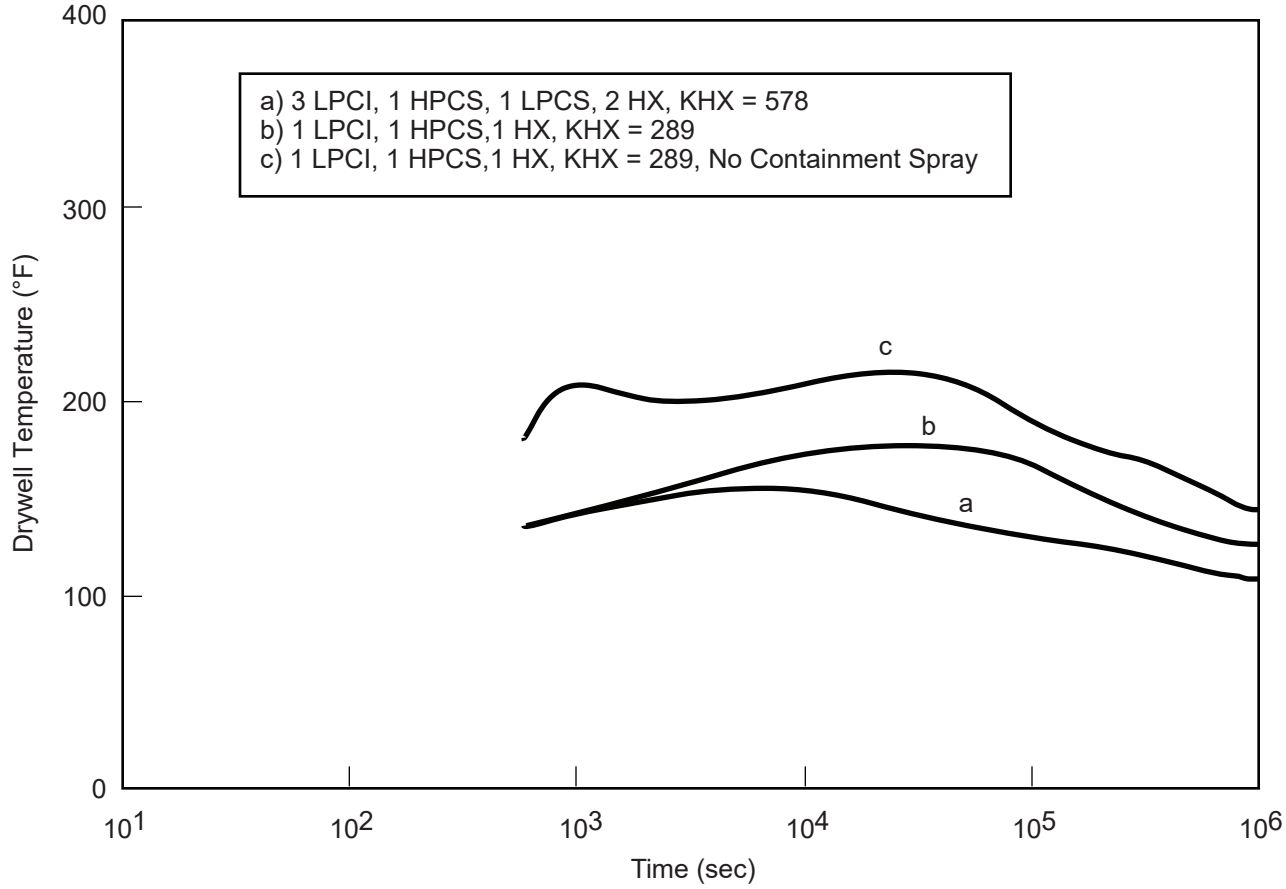

Columbia Generating Station Final Safety Analysis Report	Drywell Temperature Response for Large Recirculation Line Break - Cases A, B, and C		
	Draw. No. 950021.95	Rev.	Figure 3A.3.2-23

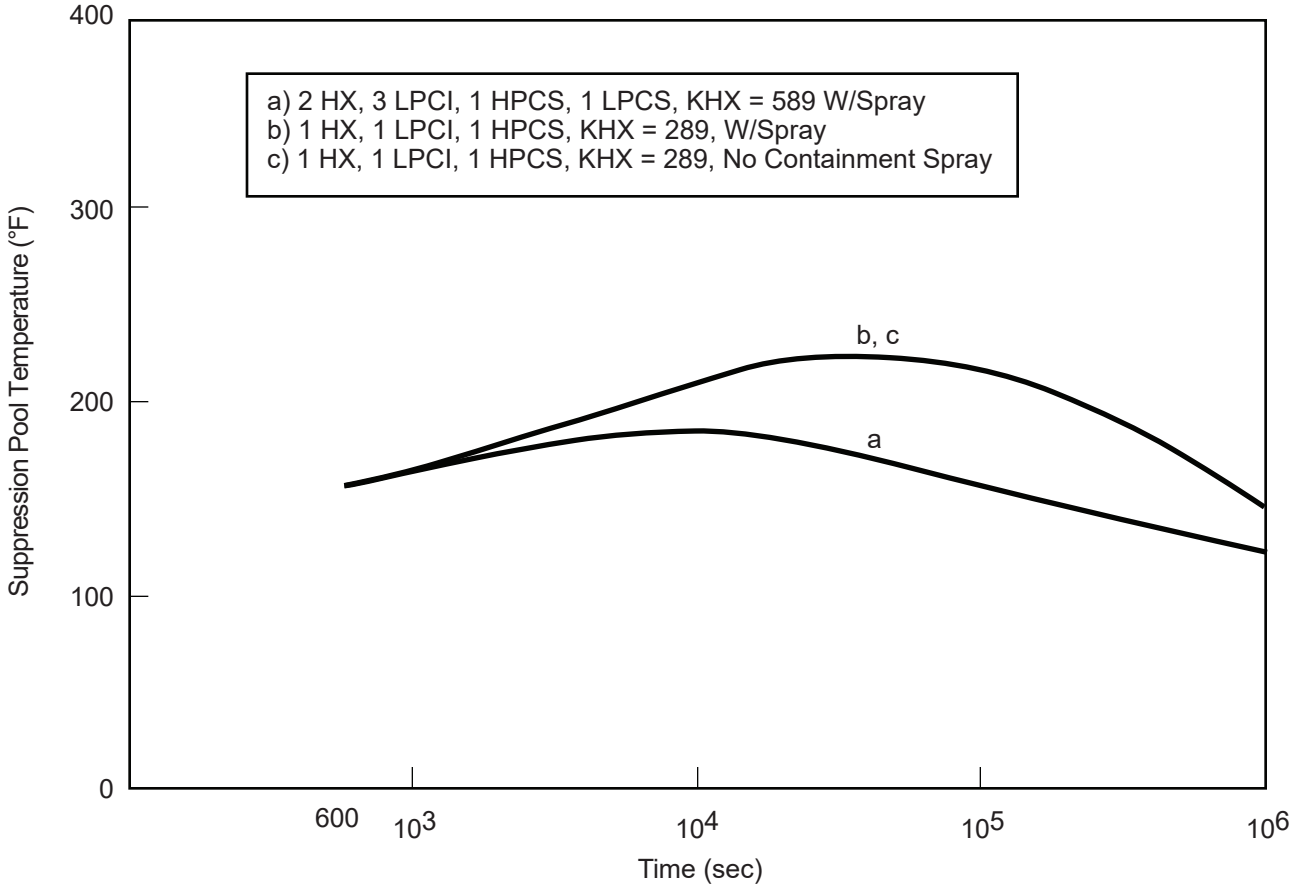

Columbia Generating Station Final Safety Analysis Report	Suppression Pool Temperature Response for Large Recirculation Line Break - Long Term Response		
	Draw. No. 950021.96	Rev.	Figure 3A.3.2-24

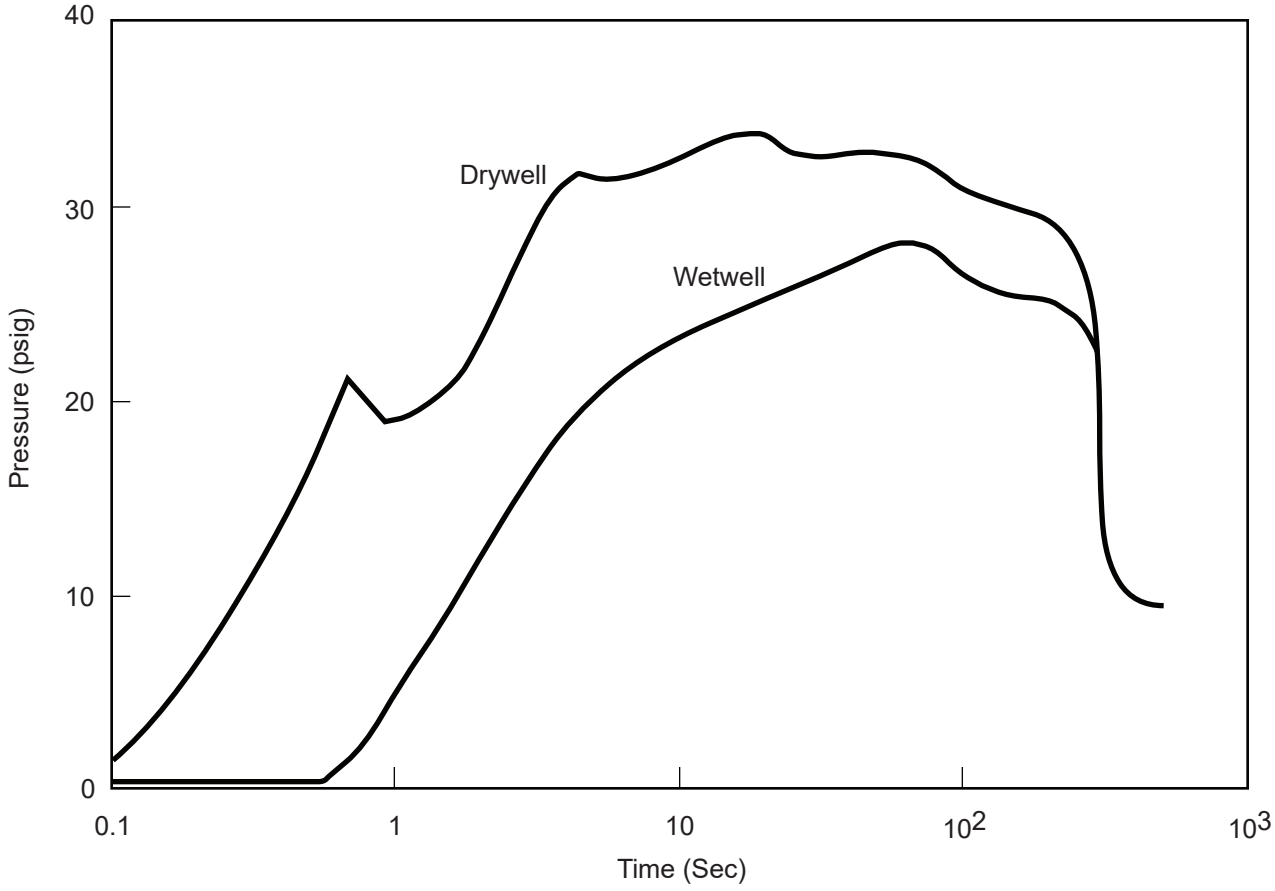

Columbia Generating Station Final Safety Analysis Report	Pressure Response Main Steam Line Break		
	Draw. No. 950021.97	Rev.	Figure 3A.3.2-25

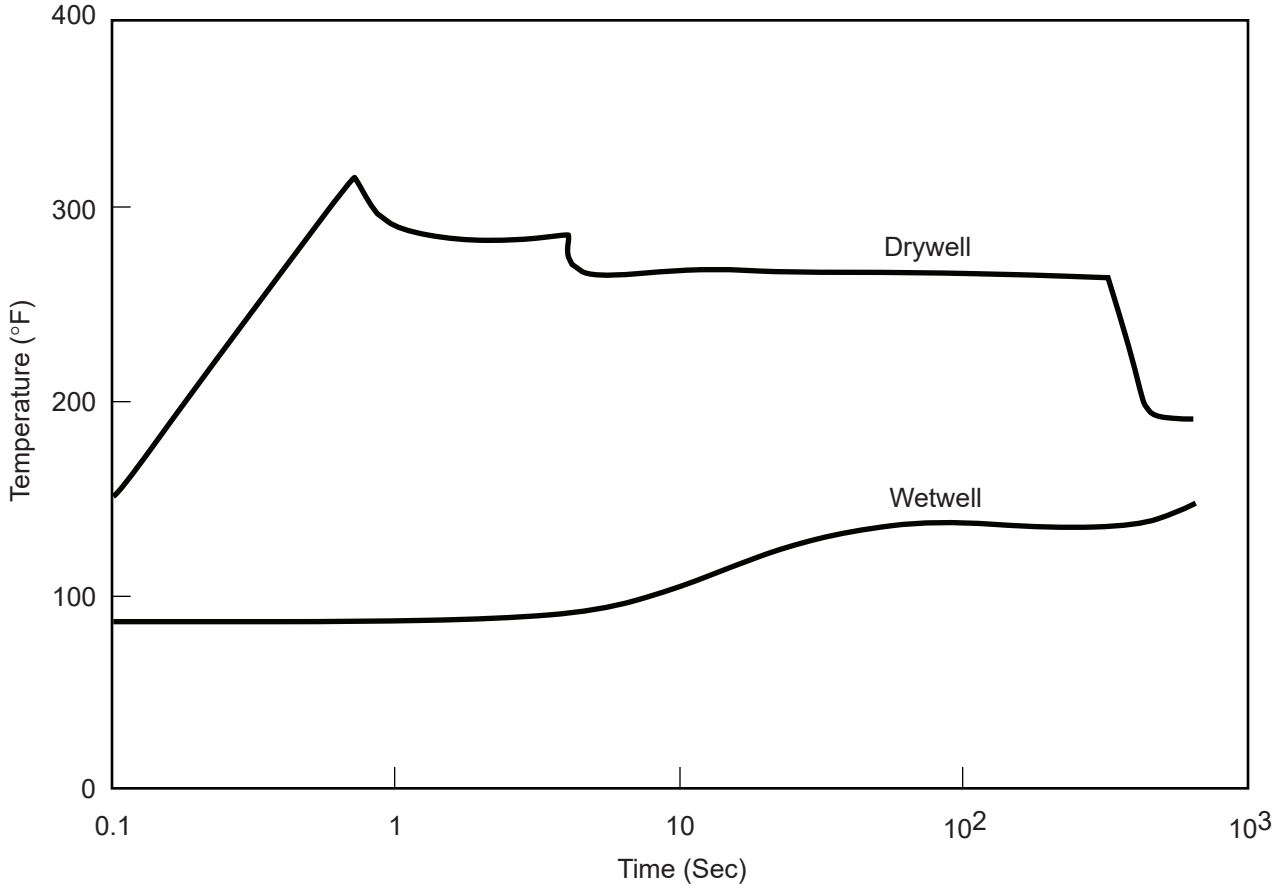

Columbia Generating Station Final Safety Analysis Report	Temperature Response - Main Steam Line Break - Minimum ECCS		
	Draw. No. 950021.98	Rev.	Figure 3A.3.2-26

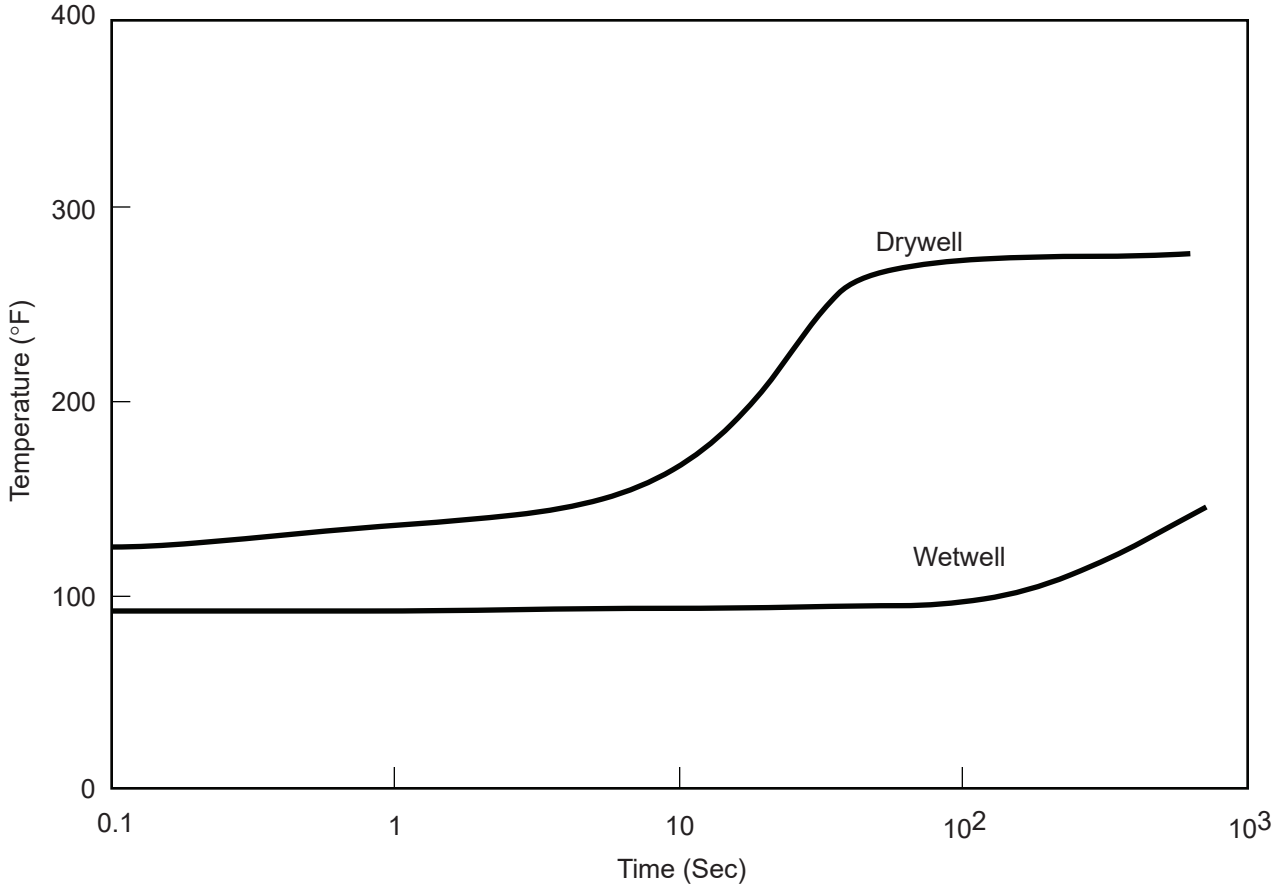

Columbia Generating Station Final Safety Analysis Report	Temperature Response - Recirculation Line Break (0.1 ft^2)		
	Draw. No. 950021.99	Rev.	Figure 3A.3.2-27

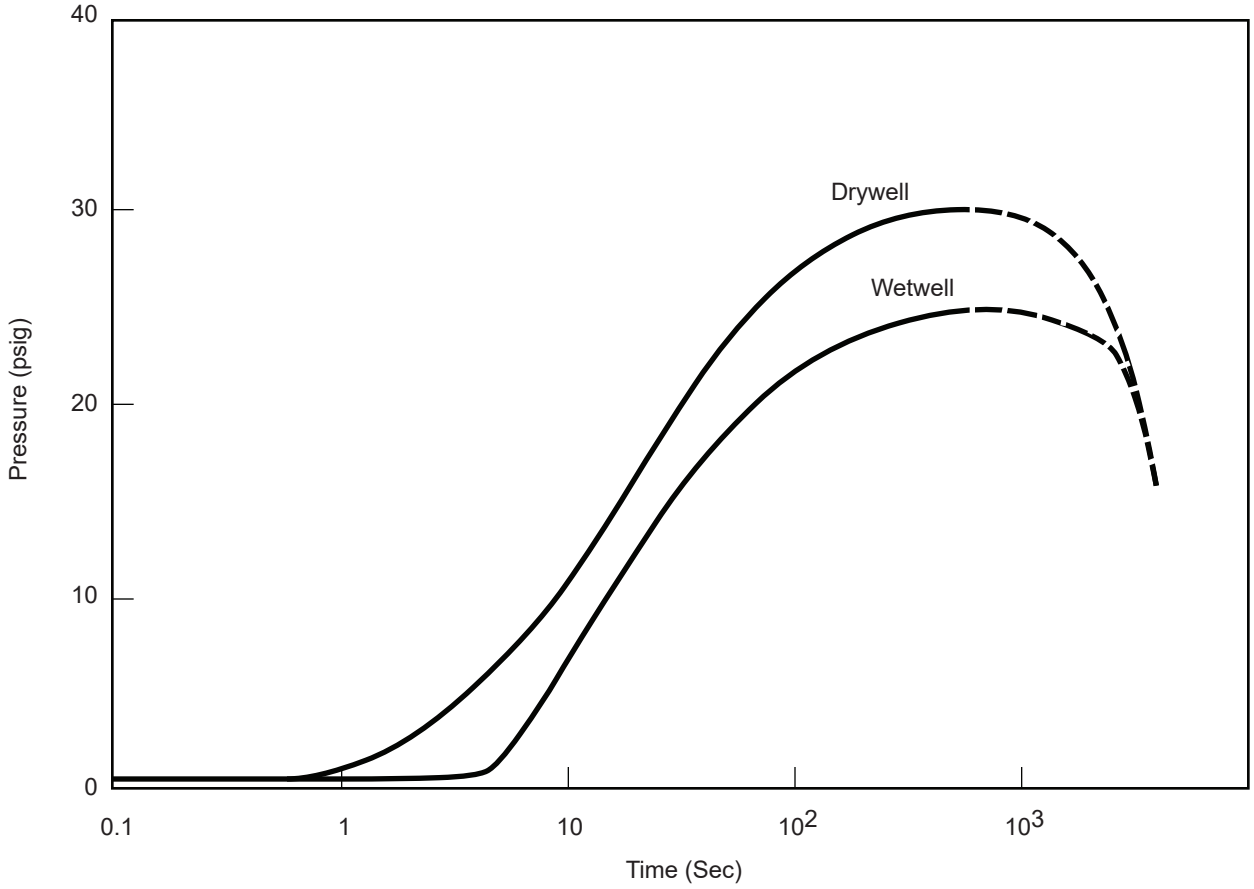

Columbia Generating Station **Final Safety Analysis Report**	**Pressure Response -** **Recirculation Line Break (0.1 ft^2)**		
	Draw. No. **960222.84**	Rev.	Figure **3A.3.2-28**

3A.3.3 LOAD SUMMARY

A load summary is given in Table 3A.3.3-1 to provide guidance in identifying loads and to provide references to more detailed discussions of them. The table lists the loads being evaluated and the peak load magnitude directly applied to each structure, or a reference to the DAR sections where the information is derived. It also lists the classification of the load as primary or secondary as defined by NRC.

Table 3A.3.3-1[a]

Summary of Hydrodynamic Loads on Wetwell Structures

Load Category	Stl. Contain-ment	Vert. and Horiz. Tees (6)	Base-mat	Pedestal	Dia. Floor	Dia. Floor Seal	Down-comer Bracing	Column	Down-comer	SRV Piping System	Quencher	Piping System: Plat-forms and Ladder	Piping System: Fully Sub. (3)	Piping System: Part. Sub.	Piping System: In Pool Swell Zone (3)	Piping System: DAR Ref. Sec.	Load Class
SRV																	
Water Clearing	sm	sm	sm	sm	N/A	N/A	sm	sm	sm	sm	sm	N/A	sm	sm	N/A	3.1.2.1	Sec.
Air Clearing	151	151	151	151	N/A	N/A	3.1.3.2	3.1.3.2	3.1.3.2	3.1.3.2	3.1.3.2	N/A	3.1.3.2.	3.1.3.2	N/A	3.1.3	Prim.
Steam Cond.	sm	sm	sm	sm	N/A	N/A	sm	sm	sm	sm	sm	N/A	sm	sm	N/A	3.1.3.2	Sec.
LOCA																	
Vent Water Clearing	24	24	24	sm	N/A	N/A	sm	3.2.3.3	sm	3.2.3.3	3.2.3.3	N/A	3.2.3.3	sm	N/A	3.2.3	Prim.
Air Bubble Charging	21[b]	21[b]	21[b]	sm	N/A	N/A											

[a] Conformance to NRC acceptance criteria for each load in this table is presented in Attachment 3A.H.

[b] Values are in psig.

Notes:

1. Peak dynamic pressure.
2. Unless identified as dynamic pressure, the numerical value given is equivalent static peak pressure (i.e., includes a DLF).
3. All fully-submerged piping systems enter the pool below vent exit.
4. sm denotes load as small, not requiring consideration.
5. Between elevations 466 ft-4.75 in. and 484 ft-4.75 in.
6. LOCA induced vent, thrust loads are neglected as secondary loads (see Reference 3A.3.2-1).

3A.3.4 SEQUENCE OF DYNAMIC LOADS

The effects of various dynamic loads on structures are analyzed separately. It is important to establish the relative time sequence of all dynamic events to obtain a realistic assessment of design margins. The DFFR (Reference 3A.3.2-2) established relative sequence of dynamic loads during a single SRV discharge event and a postulated LOCA. It is noted that during an SRV actuation the water clearing loads, the air clearing loads, and the steam condensation loads occur in a sequence and the peak dynamic effects due to each need not be combined. Similarly, the LOCA water clearing, air clearing (bubble charging), pool swell impact, pool swell drag, pool fallback, and the high, intermediate, and low mass flux steam condensation occur in a sequence and the peak dynamic effects due to each need not be combined. During pool swell or fallback, drag pressure parallel to the flow and lift pressure normal to the flow occur simultaneously, and the two loads are combined. Also, for some submerged structures, pool swell impact occurs at the upper parts of the structure while pool swell drag and lift loads act on the lower parts of the structure. In this case, the three loads are combined. The continuity of short-term water and air clearing phases during an SRV discharge or during a LOCA and the pool swell impact and drag loads during a DBA LOCA is recognized either by specifying a conservative DLF for use with peak load value of the combined time history or by use of the combined time history in the dynamic analysis in assessing the structures.

The DFFR provides guidance about the SRV actuations occurring during the normal operation of the plant and during the small, intermediate, and large break LOCA. In absence of information about relative time sequence of the three events, the following conservative assumptions for submerged structures are made in combining the effects due to these events in this assessment:

a. Short-term LOCA and SRV loads

   For structures submerged in the pool, the direct hydrodynamic loads due to the LOCA jet, LOCA bubble, pool swell, and fallback are not combined with the direct hydrodynamic loads due to the SRV water jet or air bubbles. The presence in the pool of air bubbles from the SRV line is assumed to have negligible effect on short-term pool dynamics during a LOCA. The seismic effects are combined with the short-term LOCA load effects; and

b. Long-term LOCA and SRV loads

   For all miscellaneous submerged piping systems and major structures (columns, downcomer bracing, downcomers and SRV line with quencher) the worst case LOCA steam condensation loads are combined with seismic effects and with a single adjacent SRV actuation load or with the actuation of ADS valves.

3A.3.5 LOAD COMBINATIONS AND ACCEPTANCE CRITERIA

Load combinations and acceptance criteria for events which include suppression pool hydrodynamic loads are described in this section. Four categories of structural components affected by these events are identified and the applicable load combinations and acceptance for each category are listed. These structural categories are the steel containment structure (suppression chamber portion), reinforced concrete structures, steel structures, and piping and piping systems. Symbols representing generic load types are used in the load combinations; these symbols are defined below.

3A.3.5.1 Steel Containment Structure

3A.3.5.1.1 Definitions

D Dead loads

L Live loads

E_O Loads generated by operating basis earthquake

E_{SS} Loads generated by safe shutdown earthquake

H Loads associated with pool swell phenomenon following L the clearing of the downcomer vents including fallback

P Containment pressure associated with the large break A (DBA) LOCA

P_B Containment pressure associated with IBA or SBA

P Loads associated with chugging phenomena

P_E Design external pressure on the containment

P_o Normal operating pressure

P_{SR} Loads associated with main steam SRV actuation

P_V LOCA related hydrodynamic loads on suppression chamber, including H_L, P_c

R_A Pipe reactions under thermal conditions generated by the postulated accidents and including R_o

R_E Pipe reactions under thermal conditions during event causing external pressure

R_O Pipe reactions during startup, normal operating or shutdown conditions, based on the most critical transient or steady-state condition

R_R Reaction and jet forces associated with the pipe break

T_A Thermal loads under thermal conditions associated with LOCA

T_E Thermal loads under thermal conditions during event causing external pressure

T_O Thermal effects and loads during normal operation

3A.3.5.1.2 Load Combinations

The following load combinations for the CGS steel containment are in agreement with those specified in the NRC Standard Review Plan, 3.8.2, Revision 0, and properly include the new SRV and LOCA hydrodynamic loads.

(1) $D+L+P_O+T_O+R_O+P_{SR}$

(2) $D+L+E_O+P_O+T_O+R_O+P_{SR}$

(3) $D+L+E_O+T_A+R_A+(P_A \text{ or } P_B)+P_V+P_{SR}$

(4) $D+L+E_O+T_E+R_E+P_E+P_{SR}$

(5) $D+L+E_{ss}+P_O+T_O+R_O+P_{SR}$

(6) $D+L+E_{ss}+T_A+R_A+(P_A \text{ or } P_B)+P_V+P_{SR}$

(7) $D+L+E_{ss}+T_E+R_E+P_E+P_{SR}$

Notes:

1. In all combinations the hydrostatic pressure due to the presence of water in the pressure-suppression chamber pool is considered with dead and live loads.

2. Restraint due to the presence of filler material between the containment vessel and the biological shield wall (equivalent to an external pressure of 2 psi) is considered where critical.

3. For independent, short duration, vibratory loads such as seismic, SRV discharge, chugging loads, the peak dynamic responses due to the individual loads are combined by the square-root-of-sum-of-the-squares (SRSS) method.

4. For time relationship between concurrently applied loads in combinations (3) and (6) see Section 3A.3.4.

5. In the case of P_{SR} and P_C both the axisymmetric and nonaxisymmetric loading conditions are investigated.

6. Maximum equivalent static pressures for P_A, P_B, and P_V are given in Table 3A.3.5-1.

The design assessment of the containment vessel is made on the basis of the SRSS method as stated above. However, subsequent investigation indicates that if combination of peak dynamic responses due to seismic, SRV discharge loads, and chugging loads is done by the absolute sum method, the resultant design margins for the containment vessel are greater than 1.0.

3A.3.5.1.3 Acceptance Criteria

The design rules for the steel containment are in accordance with ASME Code Section III, 1971 Edition through the 1972 Summer addenda, Subsection NE, Class MC Components. The acceptance criteria for each load combination are summarized in Table 3A.3.5-2.

3A.3.5.2 Reinforced-Concrete Structures

Structures to which the criteria below apply include the basemat, the RPV pedestal, the columns supporting the diaphragm floor, and the diaphragm floor slab.

3A.3.5.2.1 Definitions

D Dead loads

E_O Loads generated by operating basis earthquake

E_{SS} Loads generated by safe shutdown earthquake

H_L Hydrodynamic forces associated with pool swell phenomenon following the clearing of the downcomer vents including fallback forces

L Live loads

P_A All loads associated with the large break (DBA) LOCA including drywell and suppression chamber transient pressure loads and H_L, P_c, and P_{co} as defined herein

P_B All loads associated with IBA or SBA type of LOCA including transient pressure loads and P_c

P_c Loads associated with chugging phenomena during LOCA

P_O Normal operating pressure

P_{SR} Loads associated with main steam SRV actuation

R_A Pipe reactions under thermal conditions generated by the postulated accidents and including R_O

R_O Pipe react ions during startup, normal operating or shutdown conditions, based on the most critical transient or steady-state condition

R_R Reaction and jet forces associated with the pipe break

T_A Thermal loads resulting from thermal conditions generated by postulated accidents and including T_O

T_O Thermal effects and loads during normal operation.

3A.3.5.2.2 Load Combinations

The load combinations for the basemat and for the reinforced concrete structures internal to the containment are listed in Table 3A.3.5-3. The following notes are applicable to Table 3A.3.5-3.

a. In combinations 4, 4a, 5, 5a, 7, and 7a, the maximum values of P_A, P_B, T_A, R_A, and P_{SR} including a DLF are used unless a dynamic analysis is performed.

b. Thermal loads may be neglected when it can be shown that they are secondary and self-limiting in nature.

c. All the loads listed are not necessarily applicable to all the structures.

d. For independent short duration vibratory loads such as seismic, SRV discharge loads and chugging loads, the peak dynamic responses are combined by the SRSS method. Also, peak responses due to SRV direct pressure loads and due to SRV building motion response spectra are combined by SRSS.

e. The design assessment of the structures of Section 3A.3.5.2 is made on the basis of the preceding notes. However, subsequent investigation indicates that if combination of peak dynamic responses due to seismic, SRV discharge loads and chugging loads is done by the absolute sum method, the resultant design margins for the structures of Section 3A.3.5.2 are greater than 1.0.

3A.3.5.2.3 Acceptance Criteria

For all load combinations in Table 3A.3.5-3, the allowable limit on section strength is the section strength required to resist design loads based on the strength design methods described in ACI 318-77 (Reference 3A.3.5-1).

3A.3.5.3 Steel Structures

Structures to which the criteria below apply include the downcomer bracing system, the diaphragm floor beams, and platforms and ladders attached to the containment shell.

3A.3.5.3.1 Definitions

Definitions of load symbols in Table 3A.3.5-4 are the same as those in 3A.3.5.2.1.

3A.3.5.3.2 Load Combinations

The load combinations for steel structures internal to the containment are listed in Table 3A.3.5-4. Notes a, b, c, and d listed for Table 3A.3.5-3 in 3A.3.5.2.2 are also applicable to Table 3A.3.5-4.

The design assessment of the structures of 3A.3.5.3 is made on the basis of the preceding notes. However, subsequent investigation indicates that if combination of peak dynamic responses due to seismic, SRV discharge loads and chugging loads is done by the absolute sum method, the resultant design margins for the structures of 3A.3.5.3 are greater than 1.0.

3A.3.5.3.3 Acceptance Criteria

The allowable limits for structural acceptance for the load combinations of Table 3A.3.5-4 using the elastic working stress method are defined as follows.

Combination	Limit
1	S
2,3	1.5S
4,4a,5,5a,6	1.6S
7,7a	1.7S

In the above, S is the required section strength based on the elastic design methods and the allowable stresses defined in Part 1 of the AISC Specification (Reference 3A.3.5-2). The 33% increase in allowable stresses due to seismic loadings as allowed by AISC specification is not permitted in conjunction with the strength limits above.

The allowable limits for structural acceptance for the load combinations of Table 3A.3.5-4 using the plastic design method are defined as follows:

Combination	Limit
1,2,3	Y
4,4a,5,5a,6,7,7a	0.9Y

In the above, Y is the section strength required to resist design loads based on the plastic design methods described in Part 2 of the AISC Specification (Reference 3A.3.5-2).

3A.3.5.4 Piping Systems

3A.3.5.4.1 Definitions

The loads for the piping components are: dead weight, seismic, and loads associated with SRV actuation and LOCA effects. The SRV and LOCA loads have been described in detail in previous sections of this report. A description of the symbols as they appear in the piping and component load combination table (Table 3A.3.5-5) follows:

Load Symbol	Load Description
P	Operating pressure
D.W.	Dead weight
OBE	Loads due to operational basis earthquake
SSE	Loads due to safe shutdown earthquake

SRV	Loads due to sequential pressure setpoint actuation of all (18) SRVs
	a. SRV bubble loads on submerged piping and components in the suppression pool
	b. Building motion induced loads.
SBA/IBA	Loads associated with SBA/IBA:
	a. Chugging/CO loads on submerged structures. (Chugging bounds CO loads.)
	b. Building motion due to chugging loads. (Chugging bounds CO loads.)
DBA	Loads associated with DBA:
	a. Water jet
	b. LOCA bubble
	c. Pool swell
	d. Fallback
	e. Chugging loads on submerged structures. (Chugging bounds CO loads.)
	f. Building motion induced loads due to CO and chugging. (Chugging bounds CO.)

3A.3.5.4.2 Load Combinations

Load combinations for the loads listed in Section 3A.3.5.4.1 are given in Table 3A.3.5-5. These load combinations are based on Table 6.1 of the DFFR (Reference 3A.3.2-11) and modified conservatively. For independent short duration vibratory loads such as seismic, SRV discharge loads, and chugging loads, the peak dynamic responses are combined by the SRSS method as described in the DFFR. The time relationship for the loads are described in Section 3A.3.4.

3A.3.5.4.3 Acceptance Criteria

Piping and components are designed for normal, upset, emergency, and faulted plant conditions, as delineated in the Load Combination Table using the stress values for the respective normal, upset, emergency, and faulted limits as defined in the appropriate subsection of the ASME Boiler and Pressure Vessel Code (Reference 3A.3.5-3).

3A.3.5.5 References

3A.3.5-1 "Building Code Requirements for Reinforced Concrete," ACI 318-71/77.

3A.3.5-2 "Specification for the Design, Fabrication, and Erection of Structural Steel for Buildings," American Institute of Steel Construction, February 12, 1969/ November 11, 1978.

3A.3.5-3 ASME Boiler and Pressure Vessel Code, Section III, Division 1, Subsection NC "Class 2 Components," American Society of Mechanical Engineers, 1971 through Winter 1973 Addenda.*

* Faulted conditions appeared for the first time in Winter 1976 addendum.

Table 3A.3.5-1

Equivalent Static Loads for Pressure Transients and
Loss-of-Coolant Accident Effects

Loading Combinations (See Section 3A.3.5.1.2)	P_A (Max) psig		P_B (Max) psig		H_L (Max) psig
	Drywell	Wetwell	Drywell	Wetwell	Vent Clearing Pressure
(1), (2), (4), (5), and (7)	-	-	-	-	-
(3) and (6)	+34	+28	+30	+25	+24

Table 3A.3.5-2

Acceptance Criteria for Containment Vessel
Allowable Stress Limits

Loading Combinations[a]	Primary Stresses			Secondary Stresses	Peak Stresses	Buckling
	General Membrane (P_m)	Local Membrane (P_L)	Bending + Local Membrane ($P_B + P_L$)			
(1) and (2)	S_m	1.5 S_m	1.5 S_m	3S_m	Consider for fatigue analysis	Allowable given by ASME III Section NE-3133
(3) and (4)	S_m	1.5 S_m	1.5 S_m	N/A	N/A	Allowable given by ASME III Section NE-3133
(5), (6), and (7)						
For elements not integral and continuous	S_m	1.5 S_m	1.5 S_m	N/A	N/A	Allowable given by ASME III Section NE-3133
For elements integral and continuous	The greater of 1.2S_m or S_y	The greater of 1.8S_m or 1.5S_y	The greater of 1.8S_m or 1.5S_y	N/A	N/A	120% of Allowable given by ASME III Section NE-31311

[a] For definition of loading combinations, see Section 3A.3.5.1.

Notes:

1. Thermal stresses need not be considered in computing P_m, P_L, and P_B.

2. Thermal effects are considered in:
   a. Specifying stress intensity limits as a function of temperature.
   b. Analyzing effects of cyclic operation ASME III Section NE-3222.4

Table 3A.3.5-3

Load Combinations - Reinforced-Concrete Structures

Number	Load Condition	D	L	P_O	T_O	R_O	E_O	E_{SS}	P_B	P_A	T_A	R_A	P_{SR}	R_R
	Service Load Conditions													
1	Normal w/o temperature	1.4	1.7	1.0									1.5	
2	Normal w/ temperature	1.0	1.3	1.0	1.0	1.0							1.3	
3	Normal severe environment	1.0	1.0	1.0	1.0	1.0	1.25						1.25	
	Factored Load Conditions													
4	Abnormal (IBA/SBA)	1.0	1.0						1.25		1.0	1.0	1.25	
4a	Abnormal (DBA)	1.0	1.0							1.25	1.0	1.0	1.0[a]	
5	Abnormal (IBA/SBA) severe environment	1.0	1.0				1.1		1.1		1.0	1.0	1.1	
5a	Abnormal (DBA) severe environment	1.0	1.0				1.1			1.1	1.0	1.0	1.0[a]	
6	Normal extreme environment	1.0	1.0					1.0					1.0	
7	Abnormal (IBA/SBA) extreme environment	1.0	1.0					1.0	1.0		1.0	1.0	1.0	1.0
7a	Abnormal (DBA) extreme environment	1.0	1.0					1.0		1.0	1.0	1.0	1.0[a]	1.0

[a] Single valve actuation.

Note: See Section 3A.3.5.2.2.

Table 3A.3.5-4

Load Combinations - Steel Structures

Number	Load Condition	D	L	P_O	T_O	R_O	E_O	E_{SS}	P_B	P_A	T_A	R_A	P_{SR}	R_R
	Using Elastic Working Stress Design Method - Part 1 of AISC Specs, 1969													
	Service Load Conditions													
1	Normal w/o temperature	1.0	1.0	1.0									1.0	
2	Normal w/ temperature	1.0	1.0	1.0	1.0	1.0							1.0	
3	Normal sev. envir.	1.0	1.0	1.0	1.0	1.0	1.0						1.0	
	Factored Load Conditions													
4	Abnormal (IBA)	1.0	1.0						1.0		1.0	1.0	1.0	
4a	Abnormal (DBA)	1.0	1.0							1.0	1.0	1.0	1.0[a]	
5	Abnormal (IBA) sev. env.	1.0	1.0				1.0		1.0		1.0	1.0	1.0	
5a	Abnormal (DBA) sev. env.	1.0	1.0				1.0			1.0	1.0	1.0	1.0[a]	
6	Normal ext. env.	1.0	1.0	1.0	1.0	1.0		1.0						
7	Abnormal (IBA) ext. env.	1.0	1.0					1.0	1.0		1.0	1.0	1.0	1.0
7a	Abnormal (DBA) ext. env.	1.0	1.0					1.0		1.0	1.0	1.0	1.0[a]	1.0
	Using Plastic Design Method - Part 2 of AISC Specs, 1969													
	Service Load Conditions													
1	Normal w/o temperature	1.7	1.7	1.7									1.5	
2	Normal w/temperature	1.0	1.3	1.0	1.0	1.0							1.3	
3	Normal sev. env.	1.0	1.0	1.0	1.0	1.0	1.25						1.25	
	Factored Load Conditions													
4	Abnormal (IBA)	1.0	1.0						1.25		1.0	1.0	1.25	
4a	Abnormal (DBA)	1.0	1.0							1.25	1.0	1.0	1.25[a]	
5	Abnormal (IBA) sev. env.	1.0	1.0				1.1		1.1		1.0	1.0	1.1	
5a	Abnormal (DBA) sev. env.	1.0	1.0				1.1			1.1	1.0	1.0	1.1[a]	
6	Normal ext. env.	1.0	1.0	1.0	1.0	1.0		1.0					1.0	
7	Abnormal (IBA) ext. env.	1.0	1.0					1.0	1.0		1.0	1.0	1.0	1.0
7a	Abnormal (DBA) ext. env.	1.0	1.0					1.0		1.0	1.0	1.0	1.0[a]	1.0

[a] Single valve actuation.

Note: See Section 3A.3.5.2.2.

Table 3A.3.5-5

Load Combinations and Acceptance Criteria for ASME Code Class 1, 2, and 3 Balance-of-Plant Piping and Equipment[a]

Load Cases	Load Combinations (1, 2, and 3)	Design Assessment Acceptance Criteria
1	P+D.W.	Normal (A)
2	N+OBE+SRV_{ONE}	Upset (B)
3	N+OBE+SRV_{TWO}	Upset (B)
4	N+OBE+SRV_{ALL}	Upset (B)
5	N+OBE+SRV_{ALL}+SBA	Emergency[b] (C)
6	N+OBE+SRV_{TWO}+SBA	Emergency[b] (C)
7	N+SSE+SRV_{ADS}+SBA/IBA	Faulted[b] (D)
8	N+SSE+SRV_{TWO}+SBA/IBA	Faulted[b] (D)
9	N+SSE+SRV_{ONE}	Faulted[b] (D)
10	N+SSE+SRV_{TWO}	Faulted[b] (D)
11	N+SSE+SRV_{ALL}	Faulted[b] (D)
12	N+SSE+DBA	Faulted[b] (D)

[a] Equipment includes pumps, valves, supports, and vessels. For bolting used in connection with the support of ASME Code Class 1, 2, and 3 components, vendor load capacity data sheets are used, or where design is by the architect engineer, stress levels are maintained less than specified minimum yield at temperature.

[b] All ASME Code Class 1, 2, and 3 piping systems which are required to function for safety shutdown under the postulated events shall meet the requirements of NRC's memorandum, "Evaluation of Topical Report - Piping Functional Capability Criteria," date July 17, 1980.

Table 3A.3.5-5

Load Combinations and Acceptance Criteria for ASME Code
Class 1, 2, and 3 Balance-of-Plant Piping and Equipment[a] (Continued)

Notes:

1. As required by the appropriate subsection, i.e., NB, NC, or ND of ASME Section III, Division I. Other loads, such as thermal transient, thermal gradients, and anchor point displacement portion of the OBE or SRV, may require consideration in addition to those primary stress-producing loads listed.

2. SBA, IBA, and DBA include all event induced loads, as applicable, such as chugging, pool swell, drag loads, annulus pressurization, etc.

3. Seismic and hydrodynamic loads are combined by the SRSS technique and added to the applicable static loads.

Load Definition Legend

Normal (N)	Normal loads include internal pressure and dead weight
OBE	Operational basis earthquake loads
SSE	Safe shutdown earthquake loads
SRV_{TWO}	SRV discharge induced loads from two adjacent valves
SRV_{ALL}	The loads induced by actuation of all SRVs
SRV_{ADS}	The loads induced by the actuation of SRVs associated with the automatic depressurization system
SRV_{ONE}	The loads induced by the actuation of one SRV

3A.4 DESIGN ASSESSMENT

3A.4.1 SUPPRESSION POOL BOUNDARY STRUCTURES

3A.4.1.1 Assessment of Steel Containment Structure

The primary containment structure in the suppression chamber area, as shown in Figure 3A.4.1-1, is an orthogonally stiffened steel shell. See FSAR Section 3.8 for a description of the steel containment structure.

The thickness of the steel shell plate in the suppression chamber region is approximately 1.5 in. and varies with height. Vertical "Tee" stiffeners, at a spacing of 40.5 in., are welded to the inside face of the shell plate and extend about 8 ft beyond the knuckle (cylinder-cone inter-face) elevation. In the pool region of the suppression chamber, additional horizontal "Tee" stiffener rings at an approximate spacing of 36 in., are welded to the inside face of the shell plate. The purpose of adding these tees (Figure 3A.4.1-4) is to increase the load carrying capacity of the containment shell. The vertical tees are required for resisting compressive loads due, mainly, to seismic effects. The horizontal tees are intended to carry the hydrodynamic loads which were not considered in the original design of the containment shell. There are no heavy attachments to the containment in the suppression chamber region.

The drywell floor slab is radially separated from the containment and the gap is sealed by means of a radially and vertically flexible seal, as shown in Figure 3A.4.1-9. The slab is connected to the containment in the tangential direction by means of shear lugs.

3A.4.1.1.1 Loads Used For Assessment

The methods used for calculating hydrodynamic loads on the pool boundary, as described in Sections 3A.3.1 and 3A.3.2, provide a conservative definition of loads for design assessment.

3A.4.1.1.1.1 Safety/Relief Valve Loads. The suppression pool boundary pressure loading is determined in accordance with procedures described in Reference 3A.4.1-1 on the basis of operating conditions at CGS. A discussion on the derivation of the safety/relief valve (SRV) load definition is provided in 3A.3.1.

Several different incidents may occur which would cause one or more SRVs to actuate. For example, the valves may operate either manually, or on pressure setpoints following a turbine trip, automatically through the automatic depressurization system (ADS) system.

The critical modes of SRV actuations considered in the design are detailed in Reference 3A.4.1-1. For the purposes of design assessment, consideration is given to all the SRV discharge cases that are postulated to occur during the life of the CGS plant. A summary of the various cases is explained below.

3A.4.1.1.1.1.1 Single Valve Discharge Case. Actuation of any single SRV is postulated during a loss-of-coolant accident (LOCA) involving a large or intermediate break. Two possible cases of single SRV discharge are considered, the single inner quencher discharge and the single outer quencher discharge. A single inner quencher discharge is more likely to occur because of its lower pressure setpoint. However, a single outer quencher discharge is conservatively assumed for the assessment of the containment vessel.

3A.4.1.1.1.1.2 Two Valves Discharge Case. For this event, two SRVs are considered to discharge concurrently through two adjacent quenchers.

3A.4.1.1.1.1.3 Automatic Depressurization System Valves Discharge Case. The seven ADS valves for CGS are assigned to outer quenchers in a configuration that is nearly axisymmetrical. The ADS is characterized by an automatic and simultaneous actuation as discussed in the DFFR (Reference 3A.3.2-2). The ADS discharge is not considered to occur during a large pipe break LOCA. However, it is assumed that the ADS may discharge during an intermediate pipe break or a small pipe break LOCA.

3A.4.1.1.1.1.4 All Valves Discharge Case. Under certain plant conditions, the actuation of all 18 SRVs in CGS is assumed. Two different conditions may occur during this event: the axisymmetric all valves discharge conservatively assumes that all 18 SRVs discharge simultaneously; the nearly symmetric all valves discharge assumes that there is some imbalance during the discharge event. As discussed in the DFFR (Reference 3A.3.2-2), the all valves discharge is not considered to occur during a large pipe break LOCA. However, it is assumed that the all valves discharge may occur during an intermediate pipe break or a small pipe break LOCA.

3A.4.1.1.1.2 Loss-of-Coolant Accident Loads. Loss-of-coolant accidents are associated with postulated large pipe breaks [design basis accident (DBA)], intermediate pipe breaks [intermediate break accident (IBA)], or small pipe breaks [small break accident (SBA)]. Various transient LOCA pressure loads on the pool boundary considered in the assessment of the containment include vent water clearing jet loads, air bubble pressure loads, pool swell, fallback, drywell and wetwell pressure transients, and chugging loads.

3A.4.1.1.1.2.1 Chugging Loads. A general discussion of the chugging phenomenon is included in Section 3A.3.2.4. Design pool boundary loads discussed in Section 3A.3.2.4.2.1 are used for the structural assessment.

3A.4.1.1.1.2.2 High and Medium Mass Flux Condensation Oscillations. During the sequence of a LOCA event, condensation oscillations take place after pool swell and fallback. Depending on the steam mass flux rate, they are identified as either (a) high mass flux or (b) medium mass flux condensation oscillations. However, as noted in Section 3A.3.2.4.1.2, the controlling boundary pressure loads due to chugging exceed those due to condensation

oscillations. Therefore, condensation oscillation loads are not considered in the assessment of the containment vessel.

3A.4.1.1.1.2.3 Other Loss-of-Coolant Accident Loads. Loss-of-coolant accident loads, other than those due to condensation oscillations and chugging, include

a. Pressure and temperature transients

These transients represent symmetric loadings. An equivalent static loading is used for a LOCA pressure transient which takes due account of the time history of the pressure buildup. Thermal effects (T_A) on stress intensities and cyclic operation have been considered. Pressure and temperature transients considered in the assessment are shown in Figures 3A.3.2-20 through 3A.3.2-28;

b. Reaction from downcomer vent horizontal exit load

The horizontal loads acting at the downcomer exits are transmitted via the downcomer bracing system and result in tangential reactions at the steel containment structure;

c. Pool swell bubble pressure

The air slug pressure in the suppression pool during pool swell acts symmetrically around the inside of the containment structure. Its time history, in relation to the appropriate period of the containment structure, is used in determining the dynamic load factor (DLF).

In addition to the preceding case of symmetric loading, the case of an asymmetric bubble pressure acting on the submerged boundary in accordance with Reference 3A.3.2-5 is also included; and

d. Reactions from components supported by the steel containment structure

Drag and impact loads occur on structural components supported by the steel containment structure as a result of pool swell and fallback. Reactions from these structural components are carried by the containment structure.

3A.4.1.1.1.3 Other Significant Loads.

a. Seismic loads

Loads due to the operating basic earthquake (OBE) and the safe shutdown earthquake (SSE), developed in the project design, are applicable. Seismic

loads include the effect of the water in the suppression pool. The effects due to water sloshing (pressure load) have been accounted for in the containment pool swell assuming a concurrent seismic event (SSE) is insignificant;

b. Dead load, live load, and hydrostatic pressure

The hydrostatic pressure due to the suppression pool is included in the dead load; and

c. Design external pressure

An external pressure of 2 psi resulting from atmospheric conditions inside and outside the drywell is used. When external pressure governs the design, an additional external pressure of 2 psi due to the reaction of the compressible foam between the containment and the biological shield wall is used. This reaction results from the thermal expansion of the containment shell.

3A.4.1.1.2 Controlling Load Combinations

The applicable load combinations for the pressure-suppression chamber portion of the steel containment structure are defined in Section 3A.3.5.1.2. Combinations presented therein are also applicable to the horizontal and vertical stiffening tees. Load combination (3), stated below, is found to control the design of the stiffened steel containment structure.

Load Combination (3): $D+L+E_O+T_A+R_A+P_B+P_V+P_{SR}$

The interpretation and contribution of each of the terms depends on the event being considered. In considering the overall steel containment structure, the controlling combination of events involves ADS actuation during an intermediate break LOCA with clugging. Consequently, P_B and T_A refer to the IBA. In this load combination, T_A and R_A are relatively insignificant. The term P_{SR} refers to ADS pool boundary pressure loading. Thus, the effective controlling load combination involves:

$D+L+E_O+P_B+P_{SR}+P_C$

3A.4.1.1.3 Acceptance Criteria

The acceptance criteria for design of steel containment structure, including horizontal and vertical tees, is in compliance with the 1971 ASME Code, Edition through the 1972 Summer Addenda, Section III, Division 1, Subsection NE is given in Section 3A.3.5.1.3.

3A.4.1.1.4 Method of Analysis

3A.4.1.1.4.1 Formulation of the Problem. In accordance with the methods presented in Sections 3A.3.1 and 3A.3.2 for defining hydrodynamic loads, it is assumed that the incident pressures on the pool boundary, resulting from bubble oscillations and steam condensation, are acting on the boundary as externally applied loads. In computing the responses of the structure, the fluid-shell interaction effects are accounted for by solving the coupled partial differential equations governing the fluid and the shell structure using finite elements. The stresses due to chugging used for assessing the containment structure are obtained by using the building model and the method of analysis presented in Section 3A.5.2. For SRV loads, a refined containment model described in Section 3A.5.1 is used.

For pool boundary hydrodynamic loads, since the vertical and horizontal tees are integrated in the model of the suppression chamber portion of the containment, the fluid-shell interaction analysis also gives the dynamic stresses in the tees.

3A.4.1.1.4.2 Mathematical Model. The mathematical model used in the containment analysis for SRV loads is discussed in Section 3A.5.1.1.2 and shown in Figure 3A.5.1-2. Prominent features of this axisymmetric model are discussed in Reference 3A.4.1-1. The mathematical model used in the containment analysis for chugging loads is discussed in Section 3A.5.2.1 and shown in Figure 3A.5.2-1. A detailed description of the chugging model can be found in Reference 3A.4.1-4.

3A.4.1.1.4.3 Coupled Equations of Motion.

a. Shell equations

The partial differential equations governing the motion of the containment shell are based on equations given in Reference 3A.4.1-3;

b. Fluid equations

The partial differential equations governing the dynamics of compressible fluid are the continuity equation and the equation of motion establishing the relationship between the pressure and the velocity of a particle in the fluid. For reasons cited in Reference 3A.4.1-4, the water in the suppression pool is considered to be compressible for the chugging model. However, for reasons cited in Reference 3A.4.1-1, the water is considered to be incompressible for the SRV model;

c. Fluid boundary conditions

The fluid boundaries can be seen in Figure 3A.4.1-8. The pressure at the fluid surface is specified to be zero. The continuity requirement at the fluid-structure interface is satisfied by specifying the radial component of fluid motion at the interface to be equal to that of the shell;

d. Shell boundary conditions

As discussed in Section 3A.5.1.1.2, a refined containment model is used for the analysis of the containment structure under SRV loading. This refined model is connected to the overall building model at the following locations (see Reference 3A.4.1-1): basemat in the radial, vertical, and circumferential directions; diaphragm floor in the circumferential direction; and stabilizer truss and refueling bellows in the radial and circumferential directions.

For the analysis of the containment structure due to chugging loads, the overall building model discussed in Section 3A.5.2.1, is used;

e. Geometric symmetry

The axisymmetric geometry of the containment shell-fluid system is utilized in the solution of the equations in cylindrical coordinates. The azimuth coordinate is eliminated from the governing equations by representing azimuthal dependence of each variable by a Fourier series. The equations are thus solved for each Fourier term or harmonic of the series and the final solution is obtained by summation of solutions for each term.

3A.4.1.1.4.4 Numerical Solution. Numerical solutions to equations described in Section 3A.4.1.1.4.3 are obtained by using finite elements. An integration time step of 0.001 sec is used in the analyses for both SRV and chugging loads.

3A.4.1.1.4.5 Computer Program. A Burns and Roe computer program “HYDI-2” (Attachment 3A.F) was developed for Mark II containment configurations, and subsequently used in the analysis of the containment structure due to chugging loads. The numerical solutions were verified by the commercially available finite element program “NASTRAN” (Attachment 3A.F). The analysis of the refined containment model for SRV loads was made with the “NASTRAN” program.

3A.4.1.1.5 Results and Design Margin

3A.4.1.1.5.1 Results of Analysis. The hydrodynamic pressure loads, as described in Section 3A.4.1.1.1, are applied to the containment wall of the fluid-shell interaction models

(Figures 3A.5.1-2 and 3A.5.2-1). Utilizing the Burns and Roe, Inc. computer program HYDI-2 for chugging loads, and the NASTRAN program for SRV loads, the responses of the containment are computed. The maximum stresses (in time) are evaluated in the applicable load combinations for determining the controlling load combination and corresponding design margin for the containment structure. Maximum time-wise profiles of radial displacements are presented in Figures 3A.4.1-2 and 3A.4.1-3 for the containment structure.

Responses to various loads discussed in Section 3A.4.1.1.1 are summarized below:

a. ADS discharge case

The ADS actuation combined with IBA or SBA is the most critical axisymmetric pressure load on the containment. For the purposes of assessment, the ADS pressure loading is conservatively assumed to be the same as the larger of each of the two all valves discharge pressure loadings, i.e., the design boundary pressure. Thus, the response of the containment to the ADS actuation is shown in Figure 3A.4.1-2. The resulting stresses are used in the controlling load combination for calculating the design margin of the containment structure;

b. All valve discharge case

In considering the two different all valves discharge events, the nearly symmetric pressure loading is slightly greater than the axisymmetric pressure loading (see References 3A.4.1-1 and 3A.4.1-2);

c. Single valve discharge case

Actuation of a single SRV combined with LOCA (DBA) loads results in the most critical non-axisymmetric pressure loading on the containment. However, responses of the containment to the resulting load combination is less severe than case (a), above;

d. Two valves discharge case

Responses of the containment to this load are conservatively assumed to be the same as case (c) (see Reference 3A.4.1-1);

e. Chugging

Reference 3A.4.1-4, described in Section 3A.3.2.4.2.2, presents the responses of the containment shell to the chugging pressure load. The resulting stresses are used in the controlling load combination for calculating the design margin of

the containment structure. As discussed in Section 3A.5.2.2, the nearly symmetric chugging load is used for assessment purposes. The response of the containment to these design chugging loads is shown in Figure 3A.4.1-3; and

f. High and medium mass flux condensation oscillations

Condensation oscillation loads are not considered in the assessment of the containment structure since they are bounded by chugging loads.

3A.4.1.1.5.2 Assessment Results. The containment assessment performed in accordance with Sections 3A.3.5.1.2 and 3A.3.5.1.3 shows that in load combination (3) the general membrane stress intensity controls the containment design. Based on this calculation, the design margin for the containment shell is 1.29.

The buckling strength of the CGS containment in resisting the external pressure and axial compression acting on the suppression pool region increases substantially as a result of adding the horizontal stiffening rings. The most critical load combination under events causing net external pressure and axial compression is load combination (7). Under this load combination the ratio of the allowable buckling pressure load of the containment to the applied external pressure load is 3.1. The ratio of the allowable buckling axial load of the containment to the axial compressive load is 1.37. In this analysis, the interaction effect is accounted for by assuming that the horizontal stiffening tees resist only external pressure while the vertical stiffening tees resist only axial compression.

For the containment tees, the stress intensities for load combination (3) are governed by primary bending plus local membrane stresses. These stresses occur at the webs of the horizontal tees and at the root of the flange for the vertical tees. Based on these stress values, the design margins for the vertical and horizontal tees are 2.23 and 1.26, respectively.

The combined stresses in both the containment and tees are calculated for the controlling load combination by adding the stress resulting from static loads algebraically and stresses due to dynamic oscillating loads by the square-root-of-sum-of-the-squares (SRSS) method. The resulting design margin for the containment structure (including the horizontal and vertical tees) is 1.26.

3A.4.1.2 Basemat

The assessment of the capacity of the basemat relative to load combinations involving suppression pool hydrodynamic loads is made in this section. The basemat and adjoining structures are shown in Figures 3A.4.1-5 and 3A.4.1-6.

3A.4.1.2.1 Loads Used for Assessment

A complete description of all the hydrodynamic loads used in the assessment of the basemat is provided in Section 3A.3. Symbols, equations, and load combinations referred to in this section are detailed in Section 3A.3.5.2.

3A.4.1.2.1.1 Safety/Relief Valve Loads. Loads on the suppression pool boundary due to SRV actuations are detailed in Section 3A.3.1. Specific SRV loading cases considered in the basemat assessment include symmetric loads due to the actuation of all 18 valves and asymmetric loads due to the actuation of a single SRV. For both cases, dynamic stresses in the basemat (bending and shear) are developed on the basis of a time-history application of the loads. The analytical model used for the assessment is shown in Figure 3A.5.1-lb. Prominent features of the model, including the use of axisymmetric shell elements is discussed in Section 3A.5.1.

3A.4.1.2.1.2 Loss-of-Coolant Accident Loads. Loads on the suppression pool boundary due to a LOCA are detailed in Section 3A.3.2. Of all the LOCA loads, chugging pressures are the most significant with respect to the basemat. Other LOCA loads, including jet loads and bubble pressures, are not significant with respect to the basemat assessment. Dynamic stresses in the basemat (bending and shear) are developed on the basis of a time-history application of the loads. The analytical model used for the assessment is shown in Figure 3A.5.2-1. Prominent features of the model, including the use of axisymmetric shell elements, are discussed in Section 3A.5.2.

3A.4.1.2.1.3 Other Significant Loads. Seismic loads constitute a principal loading in the basemat assessment. The seismic loads on the basemat from the superstructure (exterior walls, biological shield wall, and pedestal) are the same as those used in the original building design. In that original design, a dynamic analysis was made using a discrete mathematical idealization of the entire reactor building. The stress resultants at the base of the superstructure (overturning moment, axial force) due to the OBE and the SSE as developed in the original design are used.

Dead and live loads as developed in the original structural design are also used.

3A.4.1.2.2 Applicable Load Combinations and Acceptance Criteria

The load combination and acceptance criteria described in Section 3A.3.5.2 are applicable to the basemat.

3A.4.1.2.3 Method of Analysis

The structural capacity of the basemat is investigated for the applicable load combinations with loads as listed above. The general approach in the basemat assessment is to determine the

values of the controlling stress resultants in the basemat (bending and shear) on the basis of elastic analysis under applied design loads and to calculate the capacity of the basemat in terms of these stress resultants by the strength method of the ACI 318-71 Code (Reference 3A.4.1-5). Critical sections for bending and shear are located with respect to the face of the biological shield wall in compliance with code requirements.

3A.4.1.2.3.1 Effects of E_O, E_{SS}, D, L. The investigation of the basemat for the combined effect of dead, live, and seismic loads is based on the analysis performed in the original building design. Depicted as a plate on an elastic foundation, the basemat is modeled as a series of plate elements while the supporting soil is modeled as a group of elastic springs situated at designated nodes. The effects of the seismic overturning moment and the vertical acceleration of the dead and live loads are converted to nodal loads. Resulting stresses from the model and loads described above are calculated with the use of the computer program NASTRAN. Values of the controlling bending moment, beam shear, and punching shear due to combined dead, live, and SSE loads are tabulated in Table 3A.4.1-1 for the critical section of the basemat.

3A.4.1.2.3.2 Effect of P_{SR}, P_B. The values of bending moments and shears at the critical section in the basemat due to SRV actuation and chugging are available from the analysis of the reactor building models described in Section 3A.5. The symmetric mode of SRV actuation and the nearly symmetric mode of chugging result in the comparatively larger values of stress resultants. The controlling stress resultants for these loads are tabulated in Table 3A.4.1-1 for the critical section.

3A.4.1.2.3.3 Critical Load Combination. Review of the stress resultant values in connection with the applicable load combinations shows that the critical load combination for all stress resultants is load combination (7); this combination is noted below with only the significant terms included.

(7) $D + L + E_{SS} + P_B + P_{SR}$

3A.4.1.2.3.4 Capacity. The capacity of the basemat with respect to bending, beam shear, and punching shear is determined in accordance with the strength method of the ACI 318-71 Code (Reference 3A.4.1-5). These stress resultant capacities are listed in Table 3A.4.1-1.

3A.4.1.2.4 Results and Design Margins

Comparison of the design values for the stress resultants in Table 3A.4.1-1 with the capacity values in the table shows that the basemat provides adequate capacity. The ratio of bending capacity to design bending moment is 1.14. The ratio of beam shear capacity to design beam shear is 1.48. The ratio of punching shear capacity to design punching shear is 1.27.

3A.4.1.3 Pedestal

The assessment of the capacity of the reactor pressure vessel (RPV) pedestal relative to load combinations involving suppression pool hydrodynamic loads is made in this section. The pedestal and adjoining structures in the suppression chamber are shown in Figure 3A.4.1-7.

3A.4.1.3.1 Loads Used for Assessment

A complete description of all the hydrodynamic loads used in the assessment of the RPV pedestal is provided in Section 3A.3. Symbols, equations, and load combinations referred to in this section are detailed in Section 3A.3.5.2.

3A.4.1.3.1.1 Safety/Relief Valve Loads. Loads on the suppression pool boundary due to SRV actuations are detailed in Section 3A.3.1. Specific SRV loading cases considered in the pedestal assessment include symmetric loads due to the actuation of all 18 valves and asymmetric loads due to the actuation of a single SRV. For the asymmetric case, dynamic stresses in the pedestal are developed on the basis of time history application of the load. For the symmetric case, dynamic stresses are developed on the basis of applied pressures increased by an appropriate DLF which is determined from the time history analysis. The analytical model used for the assessment is shown in Figure 3A.5.1-lb. Prominent features of the model, including the use of axisymmetric shell elements, are discussed in Section 3A.5.1.

3A.4.1.3.1.2 Loss-of-Coolant Accident Loads. Loads on the suppression pool boundary due to LOCA are detailed in Section 3A.3.2. Of all the LOCA loads, chugging pressures are the most significant with respect to the pedestal. Other LOCA loads, including pool swell, jet loads, and bubble pressures are not significant with respect to the pedestal assessment. Dynamic stresses in the pedestal are developed on the basis of the model and load application described in Section 3A.4.1.2.1.2.

3A.4.1.3.1.3 Other Significant Loads. Seismic loads (E_o, E_{ss}) constitute a principal loading in the pedestal assessment. The seismic loadings and associated analysis in this assessment are the same as those used for the original design. A dynamic analysis was made using a discrete mathematical idealization of the entire reactor building including the pedestal. The stress resultants in the pedestal (overall bending moment, horizontal shear force, and axial force) due to the OBE (E_o) and the SSE (E_{ss}) as developed in the original design are used. Dead loads as developed in the original building design are also utilized.

3A.4.1.3.2 Applicable Load Combinations and Acceptance Criteria

The load combinations and acceptance criteria for internal reinforced concrete structures described in Section 3A.3.5.2 are applicable to the pedestal.

3A.4.1.3.3 Method of Analysis

The structural capacity of the pedestal is investigated for the load combinations with two types of loading, namely, asymmetric and symmetric. The general approach in the pedestal assessment is to determine the values of the controlling stress resultants on the basis of elastic analysis under design loadings and to calculate the capacity of the pedestal in terms of these stress resultants in accordance with the strength method of the ACI 318-71 Code (Reference 3A.4.1-5).

3A.4.1.3.3.1 Asymmetric Action. The loads which contribute to asymmetric action of the pedestal are seismic loads (E_O and E_{SS}), loads due to single SRV actuation (P_{SR}), and loads due to chugging phenomena (P_B). The significant stress resultants associated with these loads are overturning moment and total shear. For seismic loading, the values of these stress resultants in the original design are used. For P_{SR} and P_B, the stress resultants are obtained by integrating over the entire pedestal section the stresses obtained from the elastic analysis of the reactor building structural model. Controlling values of the stress resultants which occur at the base of the pedestal are tabulated in Table 3A.4.1-2.

Review of the stress resultant values in connection with the load combinations shows that the critical load combination for both moment and shear is load combination (7), stated below, with only the significant load terms included.

(7) $D + E_{SS} + P_B + P_{SR}$

The capacity of the pedestal relative to overturning moment and concurrent axial load is expressed by the interaction curve shown in Figure 3A.4.1-10. Points along the interaction curve representing different capacity combinations of axial load (P_u) and bending moment (M_u) have been calculated in line with the ACI 318-71 Code (Reference 3A.4.1-5). The minimum and controlling value of axial load occurs with upward seismic action; this axial load value (12,380 kips) and the controlling overturning moment from Table 3A.4.1-2 (212,380 ft kips) are also plotted in Figure 3A.4.1-10. As noted in the figure, the bending moment capacity coincident with the controlling axial load is 375,000 ft kips.

The capacity of the pedestal relative to overall horizontal (tangential) shear, calculated in accordance with the ACI 318-71 Code (Reference 3A.4.1-5), is 14,500 kips. From Table 3A.4.1-2, the controlling design shear is 2760 kips.

3A.4.1.3.3.2 Symmetric Action. Loads which contribute to symmetric action of the pedestal are due to actuation of all 18 SRVs (P_{SR}) and chugging phenomena (P_B). The hydrostatic pressure (D) also causes symmetric action. For P_{SR} and P_B, an appropriate DLF is included as noted in Section 3A.4.1.3.1.1. Symmetric action is investigated with respect to radial and circumferential normal stresses and with respect to the effect of the end fixity at the base.

To obtain the radial and circumferential normal stresses, the pedestal is analyzed as a thick walled cylinder. Maximum compressive stress (circumferential) occurs for load combination (1):

(1) $1.4D + 1.7L + 1.0P_O + 1.5P_{SR}$

In this load combination, terms L and P_O do not contribute to the stresses being considered and are omitted. For calculation purposes, the maximum values of D, and P_{SR} (positive value) are used. Maximum tensile stress (circumferential) occurs for load combination (4):

(4) $1.0D + 1.0L + 1.0T_A + 1.0R_A + 1.25 (P_B + P_{SR})$

In this load combination, L, T_A, and R_A are omitted as they do not affect the stress resultant under consideration.

Radial shear and moment occur under the symmetric loads due to the fixity of the pedestal at its junction with the basemat. The analysis is based on a general theory of the elastic behavior of cylindrical shells. Maximum values of radial shear and moment occur at the pedestal base with load combination (4).

In this load combination, L, T_A, and R_A are omitted as they do not affect the stress resultant under consideration.

3A.4.1.3.4 Results and Design Margins

Results for asymmetric loading are summarized below:

a. The controlling value of the pedestal overturning moment under design loadings is less than the pedestal moment capacity. The ratio of the moment capacity to the controlling overturning moment is 1.77; and

b. The controlling value of the pedestal base shear under design loadings is less than the pedestal shear capacity. The ratio of shear capacity to controlling applied shear is 5.25.

Results for symmetric loading are summarized below:

a. The calculated normal stresses occurring during symmetric action are found to be less than the allowable strength values. The ratio of pedestal capacity to stress under controlling loading is 5.53 for tensile circumferential stress and 15.83 for circumferential compressive stress; and

b. The calculated stresses due to radial shear and moment due to pedestal fixity at its base during symmetric action are found to be less than the allowable strength values. The ratio of radial shear capacity to maximum shear due to load is 1.11 and the corresponding ratio for radial moment is 5.06.

Review of the preceding results shows that the overall controlling design margin is 1.11 applicable to radial shear under symmetric loading.

3A.4.1.4 Diaphragm Floor

Assessment of the capacity of the diaphragm floor (see Figures 3A.4.1-6 and 3A.4.1-7) relative to load combinations involving suppression pool hydrodynamic loads is made in this section.

3A.4.1.4.1 Loads Used for Assessment

A complete description of all hydrodynamic loads is given in Section 3A.3. This subsection discusses the loads used for the assessment of the diaphragm floor.

3A.4.1.4.1.1 Safety/Relief Valve Actuation Loads. Safety/relief valve discharge does not result in pressure loads directly on the diaphragm floor, but causes dynamic horizontal pressure differentials across the downcomers, the SRV piping, and the columns, all of which are supported at the diaphragm floor, and dynamic vertical pressure differential across the downcomer bracing which is transferred to the diaphragm floor by the downcomers.

In addition, building response spectra from SRV discharge result in acceleration of the diaphragm floor which induces dynamic stresses in the components of the floor.

3A.4.1.4.1.2 Loss-of-Coolant Accident Loads. The maximum net downward pressure on the diaphragm floor during a DBA LOCA is 20 psi (see Section 3A.3.2.5.2). Since the time required to develop the maximum net downward differential pressure resulting from a recirculation line break is approximately 0.7 sec, dynamic effects are not significant and temperature transients at time of peak downward pressure differential do not contribute to the floor loading.

The maximum net upward pressure on the diaphragm floor is of short duration, and is due to wetwell atmosphere compression resulting from pool swell during a DBA LOCA (see Section 3A.3.2.5.2). A value of 5.5 psi maximum net upward pressure is considered in the assessment of the diaphragm floor (see Section 3A.3.2.3.1.3).

Pool swell and fallback drag loads on the downcomer bracing (see Section 3A.3.2.3.3.1) are transferred to the diaphragm floor by the downcomers.

Other significant LOCA loads include pipe break jet impingement and steam condensation accelerations obtained from the response spectra at the diaphragm floor support locations.

3A.4.1.4.1.3 Other Significant Loads. Other loads which result in significant stresses in the diaphragm floor are dead loads, live loads, and vertical seismic accelerations.

Dead leads include the weight of the diaphragm floor reinforced concrete slab and supporting steel beams, downcomers, horizontal run of SRV piping, including vertical supports, downcomer bracing supported vertically by the downcomers and, hence, the diaphragm floor. Live loads include personnel and equipment weights on the diaphragm floor. Seismic accelerations are obtained from the seismic response spectra at the support locations for the diaphragm floor.

3A.4.1.4.2 Controlling Load Combinations

The load combination criteria for structures internal to the pressure-suppression chamber (see Sections 3A.3.5.2 and 3A.3.5.3) are applicable to the diaphragm floor. In particular, the combinations for steel structures, using the elastic working stress design method with both service load conditions and factored load conditions, are investigated in the analysis for the structural steel components of the floor (see Section 3A.3.5.3). The combinations for reinforced concrete structures, using the ultimate strength design method with both service load conditions and factored load conditions, are investigated for the reinforced concrete slab component of the floor (see Section 3A.3.5.2). The controlling load combinations are specified in Section 3A.4.1.4.5.

3A.4.1.4.3 Acceptance Criteria

The acceptable stress levels for the steel components of the diaphragm floor are specified in Section 3A.3.5.3.3.

The acceptable allowable limit for the concrete components is the ultimate strength as determined by the ultimate strength design method of the ACI 318-71 Building Code (Reference 3A.4.1-5).

3A.4.1.4.4 Method of Analysis

The diaphragm floor components, consisting of the reinforced concrete slab, the structural steel circumferential and radial beams, and connections, were investigated individually for the effects of both the upward and downward loads. To determine design loads for each of the components, the diaphragm floor was analyzed as a slab (one-way); beam (circumferential beams), and girder (radial beams) structural system with the radial beams supported at the pedestal and on the columns, but not at the containment vessel shell.

3A.4.1.4.5 Results and Design Margins

The diaphragm floor reinforced concrete slab and the steel circumferential and radial beams, including connections, were found to have sufficient capacity to withstand the governing load combinations. The critical component under downward load, as defined by the governing load combination (7a) for steel structures, is the radial beam. The design margin (i.e., ratio of the allowable stress to the maximum absolute calculated stress) for the radial beam is 1.62, and is based on the following input into the loading combination (7a) for steel structures:

(7a) $1.7S \geq 1.0D+1.0L+1.0E_{SS}+1.0P_A+1.0T_A+1.0R_A+1.0P_{SR}+1.0R_R$

$D = 4.28$ psi

$L = 6.94$ psi

$E_{SS} = 1.52$ psi

$P_A = 20$ psi

$T_A = 0$

$R_A = 0$

$P_{SR} = 1.65$ psi

$R_R = 534{,}000$ lb

where D, L, E_{SS}, P_A, T_A, R_A, P_{SR}, and R_R are as defined in Section 3A.3.5.2.

The critical components under upward load are the anchor bolts at the radial beam to column connection. The design margin (i.e., ratio of the allowable stress to the maximum absolute calculated stress) far the anchor bolts is 1.27, based on the following input into the governing loading combination (4a) for reinforced concrete structures:

(4a) $U \geq 1.0D+1.0L+1.25P_A+1.0T_A+1.0R_A+1.0P_{SR}$

$D = 4.28$ psi

$L = 0$

$P_A = 5.57$ psi

$T_A = 0$

$R_A = 0$

$P_{SR} = 1.65$ psi

where D, L, P_A, T_A, R_A, and P_{SR}, are as defined in Section 3A.3.5.2.

3A.4.1.5 Diaphragm Floor Seal

The diaphragm floor seal is located at the inside surface of the primary containment vessel periphery at el. 493 ft 5 in. It provides a flexible, pressure tight seal between the primary containment vessel and the diaphragm floor and is capable of accommodating differential thermal expansion between them. The diaphragm floor seal is a 270° omega-shaped configuration of stainless steel and is drained to the floor drain system with four drain pipes, as shown in Figure 3A.4.1-9.

3A.4.1.5.1 Loads Used for Assessment

a. Normal plant condition

This condition is defined as reactor startup, operation at power, and normal reactor cold shutdown. These loads are due to thermal expansion of the component and thermal displacement between the concrete diaphragm floor and primary containment during normal plant operation;

b. SRV loads

These loads are not directly applied to the diaphragm floor seal, but do cause displacement of the primary containment shell relative to the diaphragm floor resulting in stress in the seal;

c. LOCA loads

The LOCA combination governing the design of the seal includes the effects of relative thermal displacement, differential pressure, and hydrodynamic effects. Other LOCA effects, given in Section 3A.3.2, include the temperature and pressure transients, pool swell air compression load, and primary containment displacement due to building response. A discussion of direct load, i.e., temperature and pressure transients and pool swell phenomenon is presented in Section 3A.4.1.5.2; and

d. Other loads

The effect of dead load, OBE, and SSE seismic loads, as applicable, are included in the analysis. Loads from the drain pipes are also included.

3A.4.1.5.2 Controlling Load Combination

The controlling load combination for the diaphragm floor seal is that which includes loads due to a DBA. The load due to pool swell air compression is given in Section 3A.3.2.3. The LOCA pressure and temperature transients are described in Section 3A.3.2.5.

The following individual loads were utilized for load combinations, per ASME Code Section III, Subsection NE in the design of the diaphragm floor seal. The load combinations used are defined in Table 3A.3.5-5.

a. Normal Plant Conditions,

b. OBE,

c. SSE,

d. LOCA,

e. SRV loads with all four valve actuations,

f. Piping loads due to all dynamic loads listed above,

g. The maximum differential pressure, and

h. Relative displacement due to the movement of the primary containment vessel and diaphragm floor.

The fatigue evaluation was performed conservatively using the cycles in Table 3A.4.1-3.

3A.4.1.5.3 Acceptance Criteria

The acceptance criteria for the analysis of the diaphragm floor seal is as follows:

a. Achieving a positive margin of safety on critical elastic buckling of the seal when considering the maximum convex pressure on the seal due to hydrodynamic loads;

b. Stress based on elastic analysis of the seal is not to exceed the following:

1. Average membrane stress intensity is not to exceed the allowable values defined in ASME Code Section III 1971 through Summer 1972 Addenda Paragraph NE 3320;

c. The cumulative usage factor as defined in ASME Code Section III, 1971 through Summer 1972 Addenda, Paragraph NB 3222.4(e) is not to exceed unity.

3A.4.1.5.4 Method of Analysis

The ANSYS (see Attachment 3A.F) finite element model of the diaphragm floor seal consists of a 5.2° segment of the omega shaped configuration and the weldolet welding fitting for the drain pipe. Refer to Figure 3A.4.1-10. Unit differential pressure, unit displacements in the vertical and radially horizontal directions to represent the differential displacement of the primary containment vessel and diaphragm floor, unit piping loads at the weldolet, and a linearized thermal gradient are specified load steps in the analysis. Stresses are calculated by applying scaling factors to the unit load analyses and superimposing the results. Note that circumferential differential displacement of the primary containment vessel and the diaphragm floor in the horizontal plane is prevented by shear lugs furnished along the outer periphery of the diaphragm floor.

3A.4.1.5.5 Results and Design Margins

The differential displacements, differential pressures, and the piping loads for the critical loading combinations, as tabulated in Section 3A.4.1.5.2, were used to perform the stress analysis. The design margin on the elastic buckling of the omega seal as described in Section 3A.4.1.5.3.a is 34.7. The calculated stress intensity and fatigue values are presented in Tables 3A.4.1-4 and 3A.4.1-5 respectively.

3A.4.1.6 References

3A.4.1-1 "SRV Loads - Improved Definition and Application Methodology for Mark II Containments," technical report, Burns and Roe, Inc. Transmitted to NRC by letter GO2-80-172 dated August 8, 1980.

3A.4.1-2 Letter GO2-82-35, "Responses to CSB Open Items 44 through 48," G. D. Bouchey (WPPSS) to A. Schwencer (NRC), January 13, 1982.

3A.4.1-3 Gosh, S. and Wilson, E., "Dynamic Stress Analysis of Axisymmetric Structures Under Arbitrary Loading," University of California at Berkeley, EEEC, 69-September 10, 1969.

3A.4.1-4 "Chugging Loads - Revised Definition and Application Methodology for Mark II Containments (Based on 4TCO Test Results)," technical report, Burns and Roe, Inc. Transmitted to NRC by letter GO2-81-189 dated July 22, 1981.

3A.4.1-5 ACI Standard 318-71/77, Building Code Requirements for Reinforced Concrete, American Concrete Institute.

Table 3A.4.1-1

Basemat - Stress Resultants at Critical Sections

	Bending Moment (kips per ft)	Beam Shear (kips per ft)	Punching Shear (kips per ft)
$D+L+E_{SS}$	3132	125	315
P_{SR}	511	32	32
P_B	76	1	20
Comb. 7	3649	157	353
Capacity	4230	232	465

Table 3A.4.1-2

Pedestal - Stress Resultants at Base

Load	Overturning Moment - M (ft - kips)	Base Shear - H (kips)
E_O	123,600	1,530
E_{SS}	212,300	2,665
P_{SR}	2,825	719
P_B	5,088	29
(Comb. 7)	212,380	2,760
Capacity	375,000	14,500

Table 3A.4.1-3

Equivalent Stress Cycles for Fatigue Evaluation

Load	Number of Events	Number of Equivalent Stress Cycles per Event	Total Number of Stress Cycles
Operating basis earthquake	5	10	50
Safe shutdown earthquake	1	10	10
SRV[a]	4,478	3	13,434
Chugging	1	1,000	1,000

[a] This includes the cycles due to building motion, direct pressure, and fluid transients during SRV actuations.

Table 3A.4.1-4

Summary of Stress Intensities for Diaphragm Floor Seal

Loading Condition Table 3A.3.5-5	Primary Membrane Stress Intensity				Primary Membrane Plus Secondary Stress Intensity			
	Calculated Stress Int. Pm (ksi)	ASME Allowable Limit	ASME Allowable Stress (ksi)	Design Margin	Calculated Stress Int. Pm + Q Range (ksi)	ASME Allowable Limit	ASME Allowable Stress (ksi)	Design Margin/ Remarks
Normal	4.46	Sm	16.56	3.71	26.83	3 Sm	49.68	1.85
Upset	11.84	Sy	25.0	2.11	44.36	3 Sm	49.68	1.12
Emergency	12.89	1.2 Sm	19.9	1.54				Evaluation not required
Faulted	13.82	1.2 Sy	30.0	2.17				Evaluation not required

$$\text{Design Margin} = \frac{\text{Allowable Stress}}{\text{Calculated Stress}}$$

Table 3A.4.1-5

Cumulative Usage Factor Calculation
for Diaphragm Floor Seal

Load Combination Set[a]	Expected Number of Cycles (ni)	Alt. Stress Salt (psi)	Allowable Number of Cycles N	Calculated Usage Factor $Ui = \frac{ni}{Ni}$
1	1	387.0	33	0.03
2	9	204.0	150	0.06
3	50	178.5	250	0.2
4	60	153.4	350	0.172
5	880	74.0	3700	0.238
6	12,434	18.0		0.0
			Cumulative Usage Factor $U = 0.7 < 1$	

[a] Load combination set definition

1 - NPC + LOCA + SSE + SRV + CHUGGING
2 - NPC + SSE + SRV + CHUGGING
3 - NPC + OBE + SRV + CHUGGING
4 - NPC + SRV+ CHUGGING
5 - SRV + CHUGGING
6 - SRV

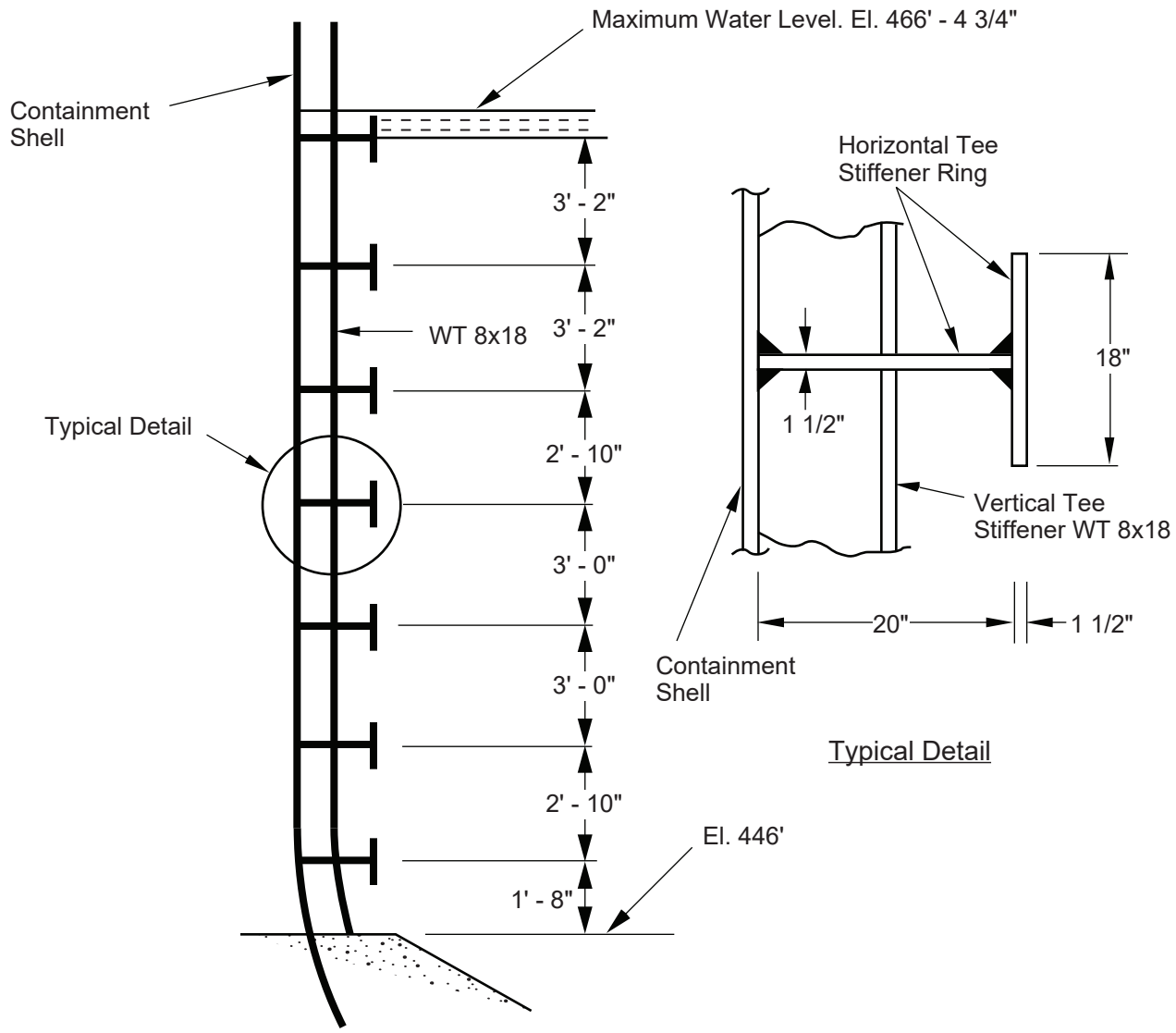

Columbia Generating Station Final Safety Analysis Report	**Stiffened Containment in Wetwell Region**		
	Draw. No. **960222.85**	Rev.	Figure **3A.4.1-1**

Form No. 960690

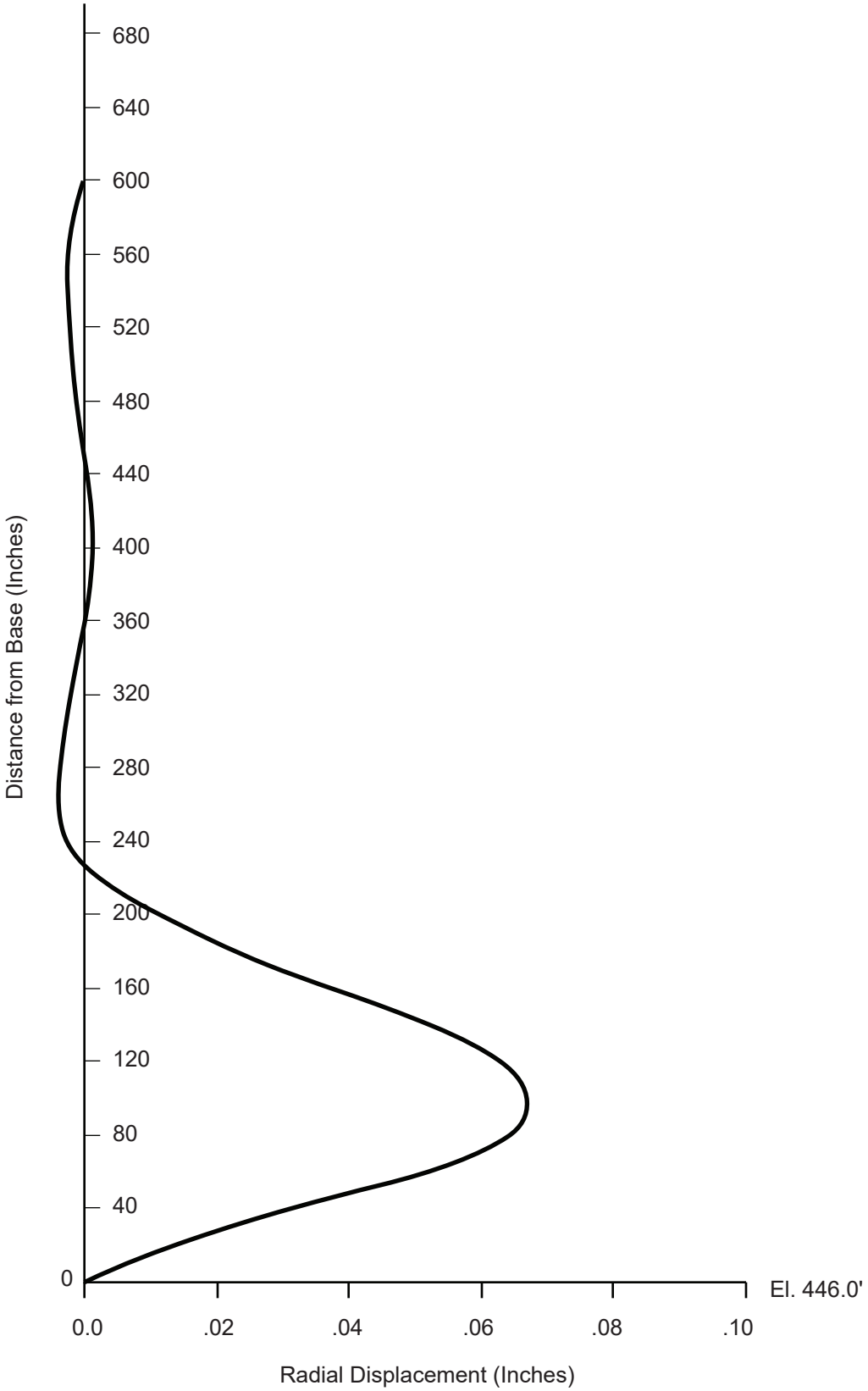

Columbia Generating Station **Final Safety Analysis Report**	**Displacement Profile** **SRV Load - All Valves**		
	Draw. No. **960222.86**	Rev.	Figure **3A.4.1-2**

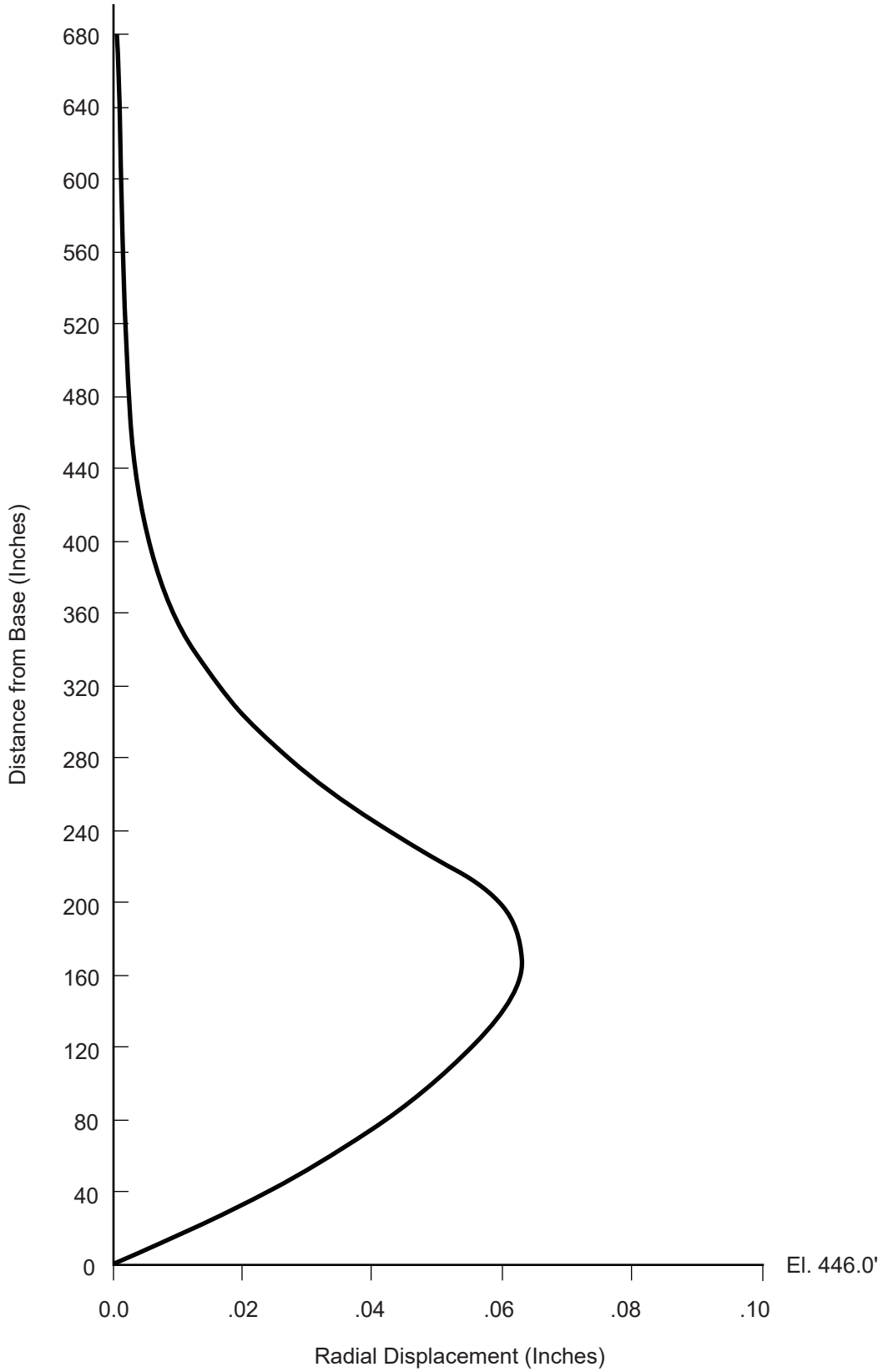

Columbia Generating Station Final Safety Analysis Report	Displacement Profile Nearly Symmetric Chugging		
	Draw. No. 960222.87	Rev.	Figure 3A.4.1-3

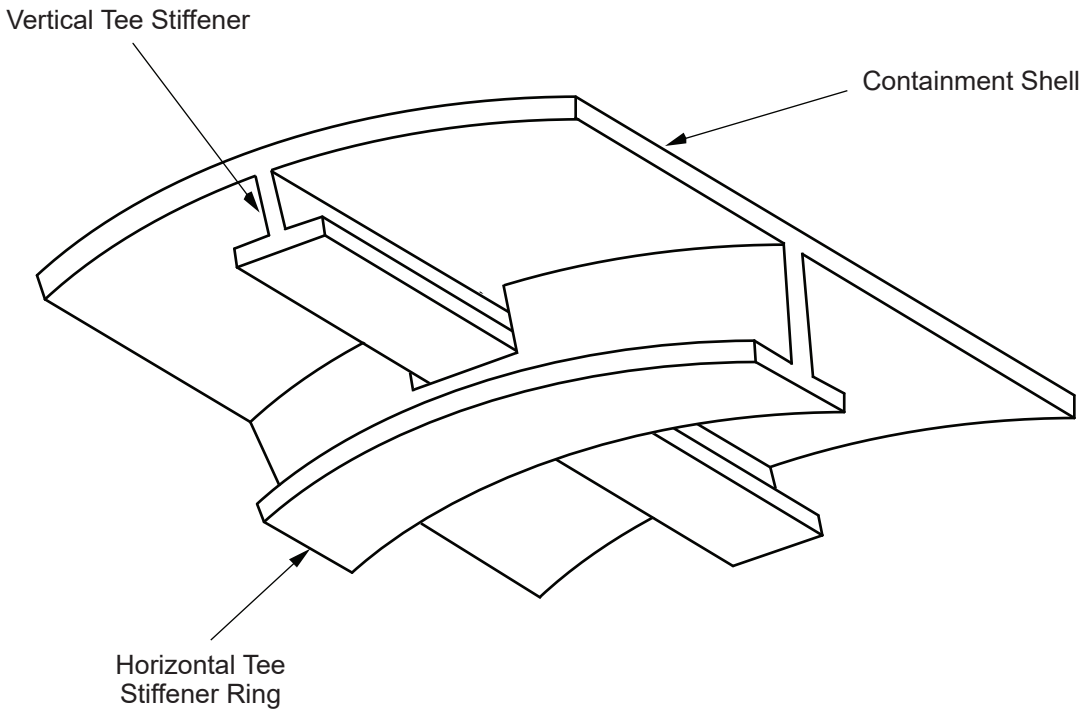

Columbia Generating Station
Final Safety Analysis Report

Stiffener Configuration

Draw. No. 970187.22	Rev.	Figure 3A.4.1-4

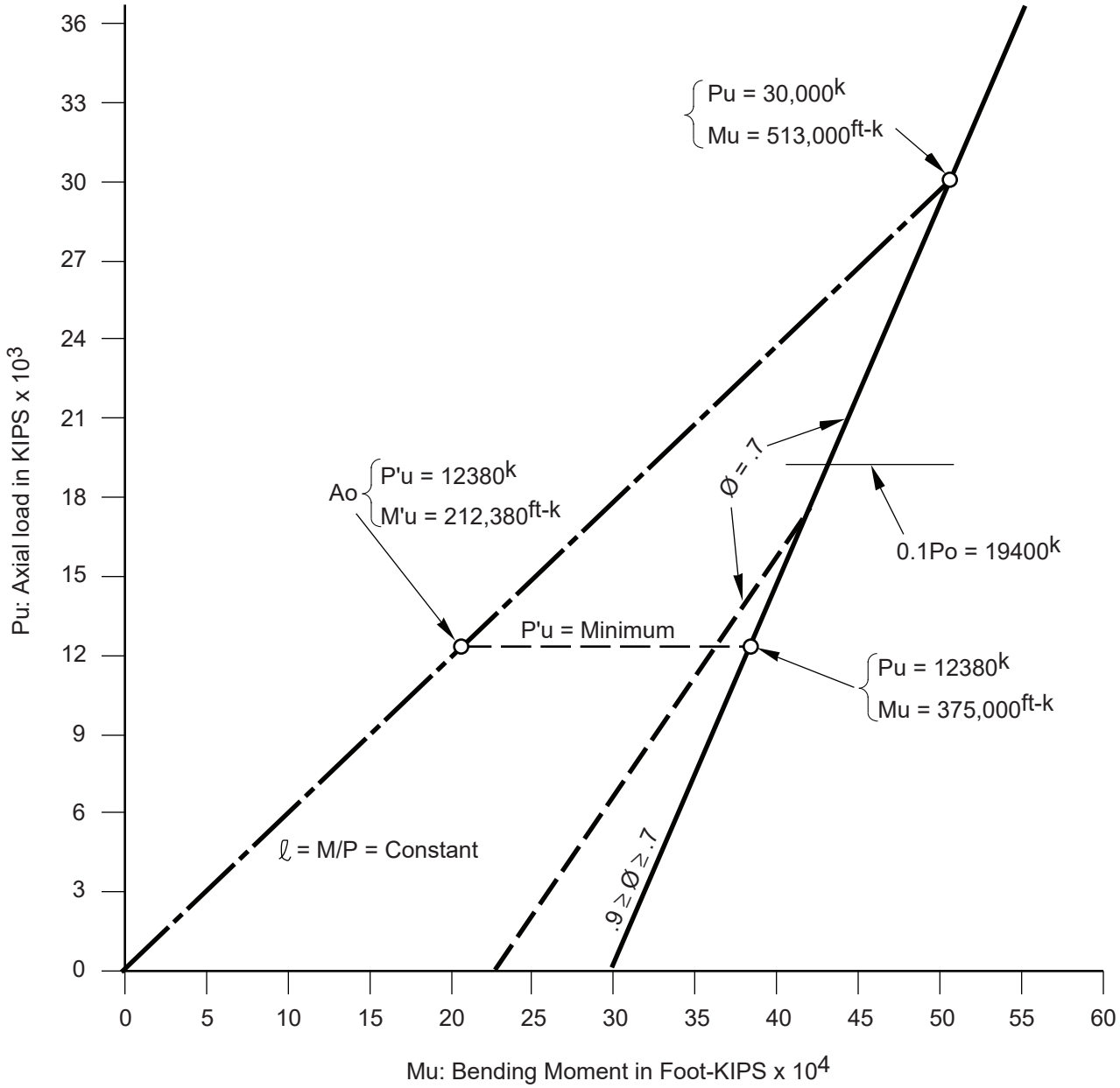

Columbia Generating Station Final Safety Analysis Report	Pedestal-Interaction Diagram Axial Load Versus Moment		
	Draw. No. 960222.90	Rev.	Figure 3A.4.1-8

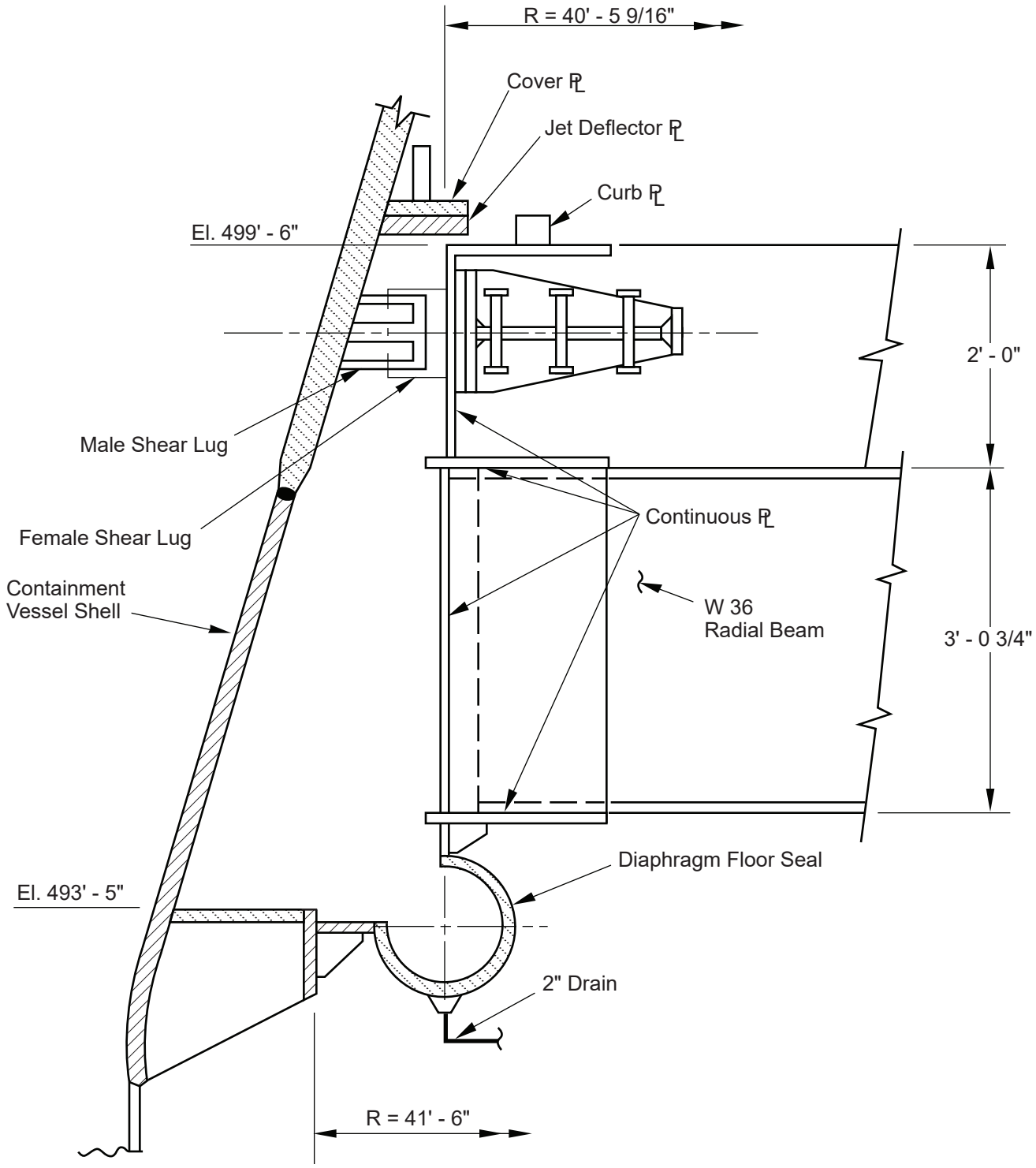

Columbia Generating Station
Final Safety Analysis Report

Drywell Diaphragm Floor Seal

Draw. No. 960222.88	Rev.	Figure 3A.4.1-9

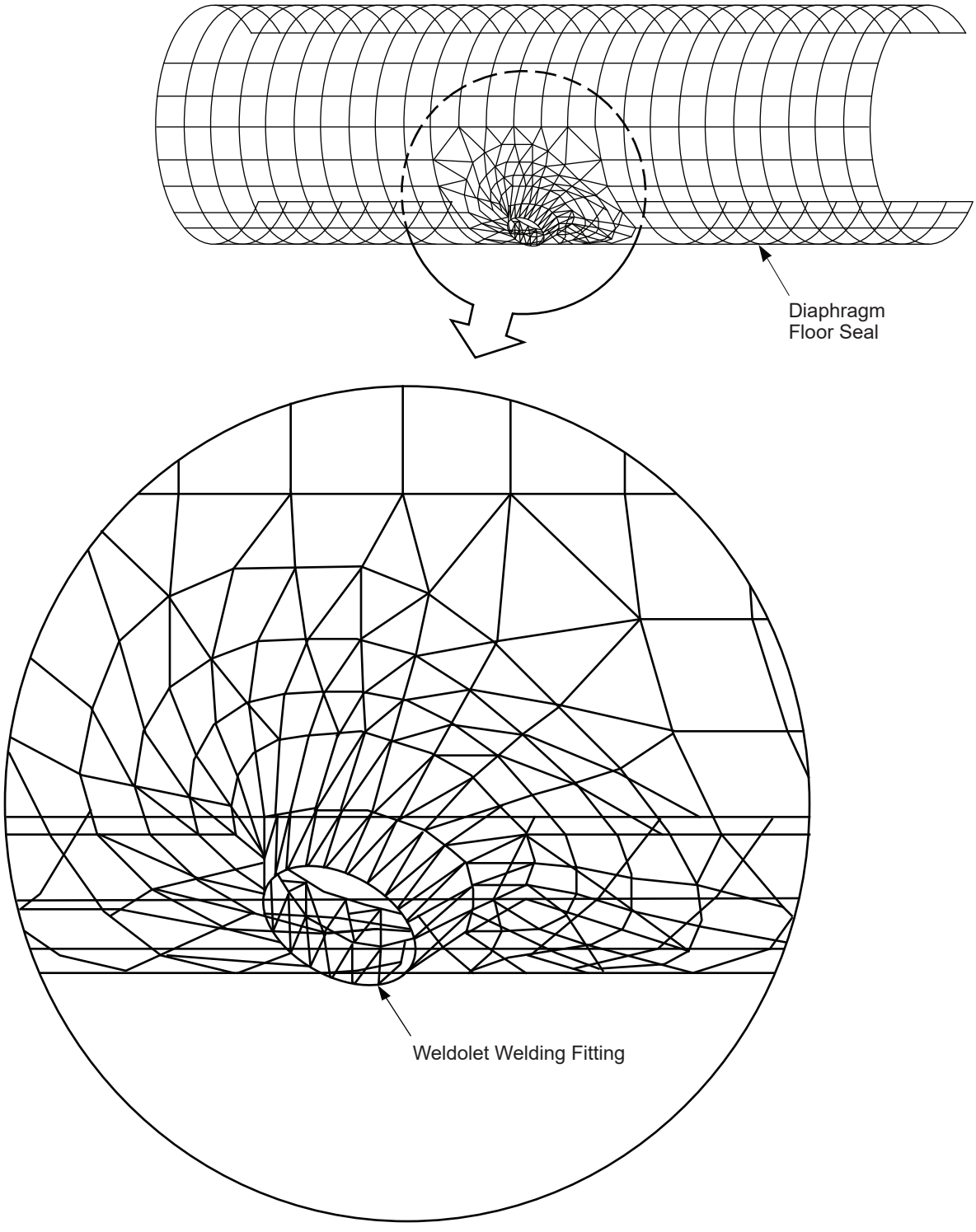

Columbia Generating Station
Final Safety Analysis Report

Finite Element Model Diaphragm Floor Seal

Draw. No. 990578.01	Rev.	Figure 3A.4.1-10

3A.4.2 SUPPRESSION POOL MAJOR STRUCTURES AND COMPONENTS

Assessment of the capacities of the major structures and components of the suppression pool chamber relative to load combinations involving suppression pool hydrodynamic loads is made in this section. The structures considered are downcomer bracing systems columns, downcomers, SRV piping system, quenchers, and platforms.

3A.4.2.1 Downcomer Bracing System

An assessment was made of the capacity of the original design of the downcomer bracing system relative to load combinations involving suppression pool hydrodynamic loads. It was determined that this original bracing, consisting of a system of radial beams, had inadequate capacity. Consequently, a replacement pipe truss bracing system was designed and installed. The assessment of the capacity of this pipe truss system relative to the load combinations involving suppression pool hydrodynamic loads is made in this section.

3A.4.2.1.1 Description of System

The pipe truss system of downcomer bracing is shown in Figure 3A.4.2-1. Like the original system, the function served by the pipe truss system is to provide horizontal support for the 102 downcomers, (three of which are capped as discussed in Sections 3A.3.2.1 and 3A.3.2.2) and the 18 SRV discharge pipes at a level near the lower end of the downcomers.

The pipe truss system consists of a horizontal planar truss located with center line at the same elevation as the original system. The model of the truss used in the structural analysis is shown in Figure 3A.4.2-2. In the truss system, the downcomers and the SRV lines are located at the truss nodes. Structural rings are provided around each downcomer and each SRV pipe for connections by the truss members. The truss members are 4-in. and 6-in. double extra strong steel pipes. Connections of the truss to the RPV pedestal and to the containment vessel are at the same connection points as the original radial beams.

As described in Section 3A.4.2.1.2, the pipe truss system is subjected to both horizontal and vertical loads. Horizontal reactions from the downcomers and from the SRV pipes are applied to the encircling structural rings which form the truss nodes. Horizontal forces applied directly to the truss members are also carried by the members to the truss nodes. By truss actions these horizontal loads are transmitted to the supports at the RPV pedestal and at the containment vessel. The pedestal connection can sustain both radial and circumferential reaction components due to horizontal loading; however, the vessel reaction is circumferential because the connection is free to move radially.

Vertical loadings, due to the various causes listed in Section 3A.4.2.1.2, act directly on the pipe truss system. To carry these vertical loadings, supports are provided against upward and downward motion at each of the downcomers; also the connections to the pedestal and vessel

are restrained vertically. Vertical forces acting on each truss member are carried to its ends at the structural rings, pedestal, or vessel connections. The structural rings around the downcomers are independent of the downcomers but stops are welded to the downcomers to prevent differential vertical motion. The structural rings around the SRV lines are independent of these lines and no restraint against differential vertical motion is provided. Vertical loads from the rings on the downcomers are transmitted by the downcomers to the drywell floor.

3A.4.2.1.2 Loads Used for Assessment

A complete description of all hydrodynamic loads is given in Section 3A.3. In this section only the loads used for the assessment of the bracing system are discussed. Symbols used in this section are defined in Section 3A.3.5.3 in connection with load combinations.

3A.4.2.1.2.1 Safety/Relief Valve Actuation Loads. Safety/relief valve actuation causes horizontal and vertical loading on the bracing system as unbalanced pressures and induced accelerations of supported components occur. The pressures and accelerations acting on the downcomers, the SRV pipe lines, and the bracing members cause the horizontal loading; the vertical loading is due to these actions on the bracing system alone. The spatial distribution of these loads is discussed under Methods of Analysis (Section 3A.4.2.1.4).

Loads due to the SRV pressures and induced accelerations are applied to the bracing system as equivalent static loads. The magnitudes of the loadings from the downcomers and SRV lines are based on analyses of each of these components as described in the assessments of the components in Sections 3A.4.2.3 and 3A.4.2.4 respectively. The pressure loadings on the bracing members proper are equivalent static pressures as defined in Section 3A.3. Reactions due to the pressures on the downcomers, SRV lines, and truss members are applied at the truss nodes.

The forces due to the induced accelerations of the downcomers, SRV lines, and bracing members are obtained by analysis of these structures using the response spectra developed for SRV actuation. These forces from downcomers, SRV lines, and bracing members are also applied as reactions at the truss nodes.

3A.4.2.1.2.2 Loss-of-Coolant Accident Loads. Loss-of-coolant accidents are characterized by several phenomena causing nonconcurrent loadings on the bracing system. The principal nonconcurrent loadings are short-term pool swell pressure and fallback pressure loads and long-term chugging loads. Other significant loads are short-term jet and bubble loads and long-term condensation oscillation loads. Pool swell and fallback are basically vertical motions and generally applied vertical pressures are associated with each. The chugging loads result from lateral forces at the downcomer exits, from horizontal and vertical accelerations induced by building motion, and from chugging pressures on the wetwell components supported by the bracing system. The horizontal accelerations of the downcomers, SRV lines,

and bracing members contribute to the horizontal loading of the bracing, whereas the vertical acceleration of only the bracing members causes vertical loading of the bracing.

a. Pressure due to pool swell

The pool swell pressures acting on the bracing system are determined to be 25 psi upward and 5 psi horizontal including the DLF, applied concurrently;

b. Pressure due to fallback

Fallback pressures acting on the bracing system are determined to be 25 psi downward and 5 psi horizontal including the DLF, applied concurrently;

c. Lateral forces at downcomer exits

The characteristics of these lateral exit loads are described in Section 3A.3.2.4.4. As noted therein, the lateral exit loads are dynamic loads whose amplitude depends on the size of the downcomer and the number of concurrently loaded downcomers. For an assumed number of concurrently loaded downcomers, the axial forces in the members of the bracing system and the reactions at the supports are determined by dynamic analysis of the system. Determination of the critical number of downcomer exits which are subjected simultaneously to lateral force is described subsequently under Methods of Analysis (Section 3A.4.2.1.4);

d. Induced accelerations due to chugging

The forces due to the induced accelerations of the downcomers, SRV lines, and bracing members are obtained by analyses of these structures using the response spectra developed for chugging action. Forces from these components are applied on the bracing system as reactions at truss nodes;

e. Chugging pressures

Chugging pressures are applied on the members of the bracing system and on the inner row SRV lines as described in Section 3A.3.2.4.3.2. Equivalent static loads constituting the end reactions due to the pressures on these components are applied at the truss nodes; and

f. Other LOCA loads

The other LOCA loads mentioned above are now considered. It is noted that the short-term loads due to LOCA jet and bubble are smaller in magnitude than

the previously considered SRV pressure loads which cannot occur simultaneously with them. Hence, these short-term loads are not controlling. Similarly, it is determined that the long-term condensation oscillation loads are smaller than loads due to chugging which occur subsequently. Therefore, the condensation oscillation loads also are not controlling.

3A.4.2.1.2.3 Other Significant Loads. Seismic forces represent a significant loading on the bracing system. The forces due to the seismic accelerations of the downcomers, SRV lines, and bracing members are obtained by analysis of these structures using the response spectra developed for OBE and SSE. The forces from downcomers, SRV lines, and bracing members are applied as reactions at the truss nodes.

Dead load of the bracing system and thermal loads are also included in the assessment. Thermal loads result from temperature change of the bracing system and from reactions on the bracing system from supported piping.

3A.4.2.1.3 Controlling Load Combinations and Acceptance Criteria

The load combinations and acceptance criteria pertinent to the downcomer bracing are those listed in Section 3A.3.5.3. Based on the results of the analysis, it is determined that, for the loading conditions involved, the controlling combinations with associated allowable stresses are those listed below. Only the significant load terms are included.

Service load conditions:

(1) $S \geq D + P_{SR}$

Factored load conditions:

(5) $1.6\ S \geq D + T_A + E_O + P_B + P_{SR}$

(7) $1.7\ S \geq D + T_A + E_{SS} + P_B + P_{SR}$

Further description as to the loads included in the design loading conditions is presented under Method of Analysis.

3A.4.2.1.4 Method of Analysis

Structurally, the pipe truss downcomer bracing system is treated as a plane truss with respect to horizontal loads and as an assembly of beams with respect to vertical loads. The horizontal planar pipe truss is supported externally at 17 equally spaced points around the pedestal and at an equal number of points at the containment vessel. Prior to the truss analysis, the reactions due to the distributed loads along the downcomers and along the SRV lines and bracing

members are calculated and these reactions are applied directly at the truss nodes. The analysis methods, design loading conditions, and principal results are described below.

3A.4.2.1.4.1 Analysis for Horizontal Loads.

a. The analysis uses the proprietary computer program "Mc Auto STRUDL".

b. The structural model used in the analysis is shown in Figure 3A.4.2-2. The model represents the actual configuration of the north half of the symmetrical structure except for adjustments along the omitted half structure.

c. The truss and its connections are treated as pin connected so that the truss members carry only axial load.

d. All loads are taken to act at the nodes in the truss analysis. The effect of truss member bending under distributed normal loads is considered in member design where combined axial load and member bending is provided for.

e. The STRUDL analysis furnishes truss member axial loads and reaction components as well as displacements of nodes.

3A.4.2.1.4.2 Analysis for Vertical Loads.

a. Vertical loads on the bracing system, i.e., on bracing members and on rings, are transmitted through bending and shear to supports on the downcomers and at the pedestal and vessel. Combined axial load and member bending is provided for in the design.

b. Downcomers and diaphragm floor are investigated for the resultant vertical loads.

3A.4.2.1.4.3 Design Load Conditions. The spatial distribution, direction, and magnitudes of possibly coincident loads as described below are used in the controlling load combinations; two critical loading conditions are adopted as a conservative basis of design. By these loading conditions it is intended to maximize stresses and reactions in specific portions of the half-structure. These critical stresses and reactions are then utilized to design all similar members and supports around the entire structure. The two conditions utilized in the design are noted below.

a. Condition 1: Maximum Horizontal Loading

This loading is intended to result in greatest stresses in the members and supports in the vicinity of the north-south and east-west axes. The directions of

building motions and applied pressures and loads are selected so as to maximize overall loading in the south to north and west to east directions. (Refer to truss layout in Figure 3A.4.2-2.) Associated vertical loads are also included.

1. SRV actuation

   a) Building motions due to all valve actuation and due to single valve actuation are considered. The building motions cause reactions at all downcomers and SRV lines and accelerations of all truss members. Radial forces and accelerations are directed outward; circumferential forces and accelerations are clockwise. Reactions of downcomers, SRV lines, and members act on the truss nodes.

   b) Unbalanced pressures due to all valve and single valve actuation are included. Varying pressures depending on distance from the active nodes are applied to all downcomers, SRV lines, and bracing members. The resulting reactions from these components act at the truss nodes. The direction of reactions from downcomers and SRV lines is generally along the line from the active node to the structure. For the bracing member, the pressures and reactions are normal to the bracing member.

   c) Vertical loads on the pipe truss are due to dead load, building motion induced acceleration, and unbalanced pressure.

2. Long-term LOCA loads (chugging)

   a) In the analysis, the number of downcomers subjected to lateral exit loads is varied from one to all 51 downcomers in the model structure. Two directions of load application are considered: south to north and west to east. It is determined that controlling effects are always due to loading of a single vent. In this regard it is noted that the lateral load definition in Section 3A.3.2.4.4 provides a high intensity load for single vent loading as compared to multiple vent loading.

   b) Building motion due to chugging causes reactions at all downcomers and SRV lines and accelerations of all truss members. Radial forces and accelerations are directed outward; circumferential forces and accelerations are clockwise. Reactions of the downcomers, SRV lines, and truss members act on the truss nodes.

c) Chugging pressures on the interior SRV lines result in radially outward reactions applied at the truss nodes.

d) Vertical loads on bracing members are due to building motion induced accelerations and chugging pressure. In addition, inclination of bracing members during LOCA caused by downcomer temperature growth results in vertical component of member axial force as an additional reaction on the downcomer.

3. Seismic

a) Eastward, northward, and vertical seismic actions are included. Both OBE and SSE are considered.

b) In west-east seismic action, all downcomers and SRV lines react against the bracing towards the east. All bracing members have accelerations eastward. Corresponding northward effects result from south-north seismic action.

c) Vertical loads on bracing members are due to vertical accelerations;

b. Condition 2: Maximum Vertical Loading

The vertical loads associated with Condition 1 which involve controlling horizontal loads have been previously stated. To determine the maximum vertical loading, short-term LOCA events are investigated. Loads included under Condition 2 are described below.

1. SRV actuation

The acceleration and pressure loads due to single valve actuation are included.

2. Pool swell or fallback

The vertical statically equivalent pressures due to pool swell or fallback are 25 psi on pipe truss members and on truss rings at downcomers and SRV lines.

3. Seismic

Horizontal and vertical loadings are the same as described above for Condition l.

4. Additional DBA effects

Inclination of bracing members during DBA caused by downcomer temperature growth results in a vertical component of member axial force as an additional reaction on the downcomers. Also, building motion results in vertical acceleration of the bracing members. However, this acceleration has relatively small magnitude.

5. Coincident member axial loads

Such axial loads are caused by single SRV actuation and by seismic loading.

3A.4.2.1.5 Results and Design Margin

The principal results of the analysis and the resultant design margins are stated below.

3A.4.2.1.5.1 Principal Results.

a. Bracing members

These members are designed for combined stress involving axial force and biaxial bending. Members connecting to the pedestal are 6-in. double extra strong steel pipe; all other members are 4-in. double extra strong steel pipe;

b. Node rings

These rings are designed for a combination of radial loads which is conservative based on the design loading conditions. As a result of this analysis, built-up H-sections 5 in. wide by 7 in. high at the downcomers and 4 in. wide by 6 in. high at the SRV lines are used. Material is high strength structural steel (ASTM A 572, Fy = 60 k.s.i.);

c. Pedestal connections

The existing embedded plates for the original radial beam system are utilized in the pipe truss system. Additional strengthening was installed based on the design loading conditions. Six concrete anchors were added at each pedestal connection; and

d. Containment vessel connection

The pipe truss end bearing at the containment vessel fits into the existing socket provided for the original radial beams. The containment vessel redesign includes the reactions due to the downcomer bracing design loading conditions.

3A.4.2.1.5.2 Design Margins. The design margins provided by the pipe truss bracing system are discussed in this section. The design margin for a structural component or system refers to the controlling design parameter such as bending stress for a flexural member and sum of the amplified stress ratios for the case of combined axial and bending stress. The design margin is then defined as the ratio of the permissible value of the design parameter to the value of the design parameter under design loading.

Table 3A.4.2-1 lists the controlling design margins for each of the six principal structural components of the pipe truss bracing system, namely, 6-in. pipe members, 4-in. pipe members, pedestal connection, vessel connection, downcomer ring, and SRV line ring. The calculated design margins are listed in the table for the cases of maximum horizontal or vertical loading (Conditions 1 or 2), under both service load and factored load conditions.

3A.4.2.2 Columns

The assessment of the capacity of the columns relative to load combinations involving suppression pool hydrodynamic loads is presented in this section. The columns and adjoining structures are shown in Figure 3A.4.2-3.

3A.4.2.2.1 Loads Used for Assessment

A complete description of all hydrodynamic loads is given in Section 3A.3. Seismic loads are described in Section 3A.3.5. In this section, only the loads used for the assessment of the columns are discussed. Symbols used in this section are defined in Section 3A.3.5.2 in connection with load combinations.

3A.4.2.2.1.1 Safety/Relief Valve Actuation Loads. Actuation of the SRVs results in four different load effects on the columns. These are unbalanced bubble pressure on the columns, column accelerations associated with resultant building motions, quencher discharge water jet loads, and secondary effects from pressure loading of the downcomer bracing truss.

Maximum bubble pressures applied laterally on the column are defined for two cases, namely, initial actuation and subsequent actuation. The spatial distributions of the maximum pressure loading on the column corresponding to these two cases are shown in Figure 3A.3.1-8. The DLFs associated with these maximum pressure loadings are functions of the column modal frequencies as shown in Figure 3A.3.1-10. The maximum dynamic column reactor loads for the subsequent actuation load case are documented by Reference 3A.3.1-9 and are tabulated in Table 3A.4.2-2. The structural model used for the dynamic analysis of the column under lateral load is described in Section 3A.4.2.2.3 and shown in Figure 3A.4.2-4.

The horizontal and vertical accelerations due to building motion are based on the response spectra developed for SRV actuation in Section 3A.5.1. The horizontal (lateral) accelerations are used in the dynamic analysis of the column by the response spectrum method in conjunction with the structural model described in Section 3A.4.2.2.3 and shown in Figure 3A.4.2-4. The axial (vertical) forces in the column are obtained from the vertical response spectra by a dynamic analysis by the response spectrum method; a structural model, which includes both the diaphragm floor beam and the column, is used and is shown in Figure 3A.4.2-5.

The quencher jet drag load on the column is small in comparison with the bubble load. Since the two loadings do not occur simultaneously, the jet loading is not a controlling loading. The direct vertical pressure loading on the downcomer bracing members is transmitted into the diaphragm floor by the downcomers. The diaphragm floor in turn loads the column. The net loading on the column during the phase of maximum bubble pressure on the column is small and is included in the assessment.

3A.4.2.2.1.2 Loss-of-Coolant Accident Loads. Both short-term and long-term LOCA loads are significant in the assessment of the columns.

Several axial loads on the columns due to short-term LOCA events are considered in the analysis. The overall pressure transient in the drywell and wetwell results in a net downward pressure (20.55 psi equivalent static) on the diaphragm floor and hence an axial compressive column load. The design net upward pressure (5.50 psi) on the diaphragm floor during the pool swell transient causes an upward load on the columns. During LOCA, vertical pressures act on the downcomer bracing system due to bubble charging and due to pool swell and fallback. The resultant vertical forces are transmitted via the downcomers and the diaphragm floor into the columns. However, these forces are not controlling in comparison with the aforementioned net downward and upward pressures on the diaphragm floor. In addition to the pressure loads, the load on the column, due to pipe break/jet impingement on the diaphragm floor, is included in the assessment.

The significant lateral loads associated with LOCA, which are included in the column assessment, are those due to chugging. Lateral loads due to water clearing and due to air

clearing are negligible. The loads due to condensation oscillation are less critical than those due to chugging, and consequently, are omitted from the assessment. The effects of chugging include both direct horizontal pressures on the columns and induced horizontal and vertical accelerations associated with building motions, but only the effects due to building accelerations are significant.

The horizontal and vertical accelerations due to chugging are based on the response spectra described in Section 3A.5.2. Column loading is then developed by dynamic analysis of the column by the response spectrum method in the manner described above for SRV induced building motion. The analysis for horizontal loading uses the structural model of Figure 3A.4.2-4, and the analysis for vertical loading uses the structural model of Figure 3A.4.2-5.

3A.4.2.2.1.3 Other Significant Loads. Dead load, live load, seismic loads, and loads due to annulus pressurization constitute additional significant loads included in the column analysis. The dead load of the diaphragm floor and columns is carried as an axial column load. The live load on the diaphragm floor is transmitted to the columns as an axial load. Horizontal and vertical column loadings are obtained from the seismic response spectra in the same manner as described above for the SRV and LOCA response spectra.

Pressurization of the annulus between the RPV and the sacrificial shield wall, due to a postulated break in either the circulation line or the feedwater line, as described in 6.2.1.2 of the FSAR, results in building motions with associated response spectra. Horizontal and vertical column loadings are obtained from the response spectra in the same manner as described above for the SRV and LOCA response spectra.

3A.4.2.2.2 Applicable Load Combinations and Acceptance Criteria

The load combinations and acceptance criteria for internal reinforced-concrete structures described in Section 3A.3.5.2 are applicable to the columns.

3A.4.2.2.3 Method of Analysis

The structural capacity of the column is investigated for the applicable load combinations with loads as listed above. The general approach in the column assessment is to determine the values of the controlling stress resultants in the column (bending moment, axial force, and shear) on the basis of elastic analysis under design loads and to calculate the capacity of the column in terms of these stress resultants by the strength method of the ACI 318-71 Code (Reference 3A.4.1-5). Three loading cases are investigated. Because of the shape of the column interaction curve for bending and axial load, maximum bending in the column is checked first with minimum coincident axial load and then with maximum coincident axial load. The third loading case involves maximum shears.

The moments, shears, and axial forces are obtained for each of the significant loads. The column is analyzed dynamically via a modal time-history technique (Reference 3A.3.1-9) for the directly applied SRV pressures and for the loads due to the building motion accelerations as defined by the SRV chugging, seismic, and annulus pressurization response spectra; dynamic analysis is by the response spectrum method. In the analysis, the column is treated as fixed at its base and simply supported at its top in accordance with actual construction. For the dynamic analysis under lateral (horizontal) loading, the actual structure is modeled as a 17-node beam as shown in Figure 3A.4.2-4. Masses are lumped at the nodes with additional mass provided below pool level to account for the effect of the suppression pool. The axial (vertical) column forces are determined by the dynamic analysis using a structural model which represents the diaphragm floor beam - column system. As shown in Figure 3A.4.2-5, the diaphragm floor mass is included in 26 nodes along the beam and the column mass is 14 nodes along the column. Dynamic analysis for lateral loads and for vertical loads are made using the commercial computer programs STRUDL and IMAGES-3D.

The critical locations along the column for bending moment and shear are determined from the analysis results. Maximum bending moments and shear occur at the column base. The magnitude of the horizontal shear at the top of the column is also noted to verify the adequacy of the top connection. The values of the controlling bending moments, shears, and axial force are listed for each significant loading in Table 3A.4.2-2.

a. Maximum bending moment with minimum axial load

It is determined that the controlling values of maximum bending moment with coincident minimum axial load occur for load combination (1). This combination is stated below for minimum axial load with only the significant load terms listed.

(1) $1.0\ D + 1.5\ P_{SR}$

The maximum bending moment is caused by the direct lateral pressure on the column, due to SRV subsequent actuation, and the associated horizontal building motion acceleration. The coincident minimum compression axial load occurs with dead load (D) and upward load due to the vertical building motion acceleration caused by the SRV actuation (P_{SR}). The controlling values of bending moment and axial load are 17.67 ft kips and 173.3 kips (compression), respectively.

The column capacity for combined loading and axial load is determined in accordance with the strength design method of the ACI 318-71 Code (Reference 3A.4.1-5). From the applicable interaction curves, the bending moment capacity of the column, with the above axial load of 173.3 kips, is found to be 2182.0 ft kips;

b. Maximum bending moment with maximum axial load

The controlling coincident values of bending moment and axial load occur for load combination (1). This combination is stated below for maximum axial load with only the significant load terms listed.

(1) $1.4\ D + 1.7\ L + 1.5\ P_{SR}$

The maximum bending moment is caused by SRV subsequent actuation as in (a) above. The coincident maximum compressive axial load is due to dead load (D), live load (L), and downward load due to the SRV actuated building motion (P_{SR}). The controlling value of the axial load is 745.2 kips. As a result of moment magnification due to the axial load, the controlling value of the bending moment is increased from 1700 ft kips to 1869 ft kips. Utilizing the column interaction curves, the bending moment capacity is found to be 2230.5 ft kips;

c. Maximum shear

As noted previously, maximum column shear occurs at the column base. Column shear capacity is affected by the axial force at the section. The controlling load combination for column shear is load combination (1) which is stated below for minimum axial load with only the significant loads listed.

(1) $1.0\ D + 1.5\ P_{SR}$

The maximum shear is caused by the same event as in (a) above, namely, SRV subsequent actuation (P_{SR}). The coincident minimum compressive axial load occurs with dead load (D) and SRV actuation (P_{SR}). The controlling values of shear and axial load are 142.4 kips and 173.3 kips (compression), respectively. Utilizing the strength design method of the ACI 318-71 Code (Reference 3A.4.1-5), the column shear capacity is calculated to be 376.9 kips; and

d. Column top shear connection

The controlling top horizontal reaction in relation to the capacity of the top connection in shear occurs with load combination (1) with minimum axial (compressive) load. This combination is stated below.

(1) $1.0\ D + 1.5\ P_{SR}$

The top horizontal reaction is caused in this case by SRV initial actuation (P_{SR}); its magnitude is 62.1 kips.

The shear capacity of the top connection is due to shear friction associated with the connecting anchor bolts and the superimposed axial load. Conservatively, the superimposed load is due to dead load (D) reduced by the upward load due to SRV actuation (P_{SR}). Utilizing the strength design method of the ACI 318-71 Code (Reference 3A.4.1-5), the shear capacity of the top connection is 75.5 kips.

3A.4.2.2.4 Results and Design Margins

It is determined that the columns have adequate capacity with regard to the applicable load combinations involving suppression pool hydrodynamic loads. The design margins with respect to the significant stress resultants are noted below:

a. Maximum bending moment with minimum axial load - The smallest design margin representing the ratio of column bending capacity to applied bending moment, with minimum axial load, is 1.54;

b. Maximum bending moment with maximum axial load - The smallest design margin representing the ratio of column bending capacity to applied bending moment, with maximum axial load, is 1.49;

c. Maximum column shear - The smallest design margin representing the ratio of the column shear capacity to the applied shear is 3.23; and

d. Column top shear connection - The smallest design margin representing the ratio of the capacity of the column top connection in shear to the applied top shear is 1.18.

3A.4.2.3 Downcomers

The primary function of the downcomer vent system is to channel the steam accumulating in the drywell chamber during a LOCA into the wetwell chamber to accomplish pressure suppression (see Section 3A.3.2.1).

The downcomer vent system consists of eighty-three 24-in. OD and sixteen 28-in. OD standard schedule carbon steel pipes running vertically downward from the diaphragm floor (except that the ends of the downcomers are stainless steel as described in FSAR Section 3.8.3.4). Originally 102 downcomers were provided, but three (one 24-in. and two 28-in.) were capped, as discussed in Sections 3A.3.2.1 and 3A.3.2.2. The downcomers are embedded in the diaphragm floor and extend down to el. 454 ft 4.75 in. All downcomers

are restrained laterally at el. 455 ft 4 in. by the downcomer bracing system, which is vertically restrained by the downcomers. Vertical loads are imposed by the bracing system onto the downcomers and transmitted to the diaphragm floor. *(See Figures 3A.2.1-5 and 3A.2.1-6.)*

Nine of the 24-in. OD downcomers have an extra strong welding tee at el. 491 ft 11 in. to accommodate 24-in. dual inline vacuum breaker valves. In addition, to provide extra strength, the eighteen 28-in. downcomers have been stiffened by the insertion of a 4-ft 8-in. long by 2-in. thick spool piece. This piece accommodates the penetration for the main steam SRV (MSRV) piping which is welded to these downcomers at el. 493 ft 0 in.

Figure 3A.2.1-4 shows locations where the vacuum breaker valve assemblies and the MSRV piping penetrate the downcomers just below the diaphragm floor.

3A.4.2.3.1 Loads Used for Assessment

The downcomer piping is subjected to static, dynamic, and hydrodynamic loads under the various plant operating conditions identified as normal, upset, emergency, and faulted. Each of these loads in various combinations is identified in Section 3A.3.5.4.

The individual loads acting on the downcomers are identified below:

a. Deadweight (W)

b. Thermal expansion and thermal transient

c. Pressure (P)

   The pressure differential between the drywell and suppression chamber atmospheres produces loads on the downcomer walls since it acts as a pressure retaining boundary during a LOCA.

d. OBE

e. SSE

f. SRV discharge dynamic loads

   The spatial distribution of the maximum direct bubble pressure loading used for downcomer assessment was obtained by multiplying a dynamic pressure load (Figure 3A.3.1-7) by the maximum DLF.

   A maximum DLF of 4.2 was conservatively obtained from the response spectrum of DLFs shown in Figure 3A.3.1-10.

The inertia loading effects due to the acceleration of the structure are described in Section 3A.5.1. The response spectra used for downcomer assessment are the enveloped spectra which were developed by enveloping the spectra due to four SRV actuation cases at the appropriate locations for the downcomers.

g. LOCA loads

The loads on the downcomer associated with LOCA are chugging pressure, condensation oscillation pressure, and the building response loading during LOCA event.

The spatial distribution of condensation oscillation and chugging pressure loadings on downcomers are considered as equivalent static pressure loads.

The pressure distribution for the condensation oscillation on downcomers is bounded by chugging load and therefore is not a controlling load.

The LOCA jet, LOCA bubble, pool swell, and fallback loads are identified to be negligible on downcomers as described in Section 3A.3.2, hence, these loads are not considered in downcomer analysis.

The input response spectra for chugging and condensation oscillation are based on the spectra described in Section 3A.5.2 and are enveloped in the same manner as described in the previous section for SRV load.

3A.4.2.3.2 Load Combination and Acceptance Criteria

The resultant stresses experienced by the downcomers are considered acceptable if they satisfy the ASME Boiler and Pressure Code, Section III, Subsection NC (Reference 3A.4.2-1).

The allowable stress "S_h" for both the 24-in. and 28-in. OD downcomers is 15,000 psi. This value was obtained from the tabulated values in Section III, Attachment 3A.I for "S_h" at a design temperature of 340°F, for carbon steel SA 155 KCF 70 and SA 106, GR.C.

Allowable Stress Limits (Equation 9 of NC-3652 and NC-3611, Reference 3A.4.2-1)

The stress includes the primary membrane plus the primary bending stresses. The limits of these stresses depend on the loading conditions as follows :

a. The limit of stress under the upset condition is $1.2S_h$ = 18,000 psi,
b. The limit of stress under the emergency condition is $1.8S_h$ = 27,000 psi, and
c. The limit of stress under the faulted condition is $2.4S_h$ = 35,000 psi.

3A.4.2.3.3 Method of Analysis

Downcomers were analyzed for the appropriate loading combination using the computer program ADLPIPE (Attachment 3A.F).

The mathematical model for the downcomer is a vertical pipe anchored at the underside of the drywell floor and guided at the downcomer bracing system. The inertia effect of water surrounding the submerged portion of the downcomer was obtained by the addition of a virtual mass of water distributed along the submerged portion. The mass of water inside the submerged portion of the downcomers was conservatively considered in the model for all dynamic loadings. The SRV discharge lines were incorporated in the model of the 28-in. downcomer.

3A.4.2.3.3.1 Static Analysis. Static analysis techniques were used to determine the stresses due to dead weight, internal pressure, thermal and hydrodynamic loads using an equivalent static pressure load, or an appropriate DLF, as shown in Figure 3A.3.1-10.

3A.4.2.3.3.2 Response Spectrum Analysis. The response spectrum method of analysis was performed, for seismic and hydrodynamic loads, using the ADLPIPE program. Modal responses were combined in accordance with Regulatory Guide 1.92 while damping values were selected per Regulatory Guide 1.61.

Spatial components were combined by the SRSS method, with the exception of seismic which used the higher of the absolute sum of (a) north-south and vertical or (b) east-west and vertical (see Section 3.7 of the FSAR).

3A.4.2.3.4 Results and Design Margin

The downcomers were analyzed for all load combinations described in Section 3A.3.5.4. The stresses in the 24-in. OD and 23-in. OD downcomers pipe show that they are structurally adequate for all plant operating conditions. The design margins for the 24-in. and 28-in. downcomers in each criteria category are summarized below. The lowest design margin is shown to be 1.08.

24-in. Downcomer

Acceptance Criteria From Table 3A.3.5-5	Allowable Stress	Calculated Stress	Design Margin
Upset	18,000	15,513	1.16
Emergency	27,000	15,709	1.72
Faulted	36,000	18,810	1.91

28-in. Downcomer

Acceptance Criteria From Table 3A.3.5-5	Allowable Stress	Calculated Stress	Design Margin
Upset	18,000	16,654	1.08
Emergency	27,000	16,744	1.61
Faults	36,000	18,371	1.96

Design margin is defined as follows:

$$DM = \frac{\text{Allowable Stress}}{\text{Calculated Stress}}$$

3A.4.2.3.5 Fatigue Evaluations

The fatigue evaluation presented below was an NRC request and is not an ASME requirement.

The fatigue evaluation of 24-in. and 28-in. downcomer lines in the wetwell air volume was performed using ASME Section III, Class 1 rules (NB-3600). A governing loading scenario, based on the DFFR (Reference 3A.3.2-1), was developed. The loadings which were evaluated are:

a. Internal pressure,
b. Thermal expansion and transients,
c. Seismic,
d. Pressure differential effects between drywell and suppression chamber,
e. SRV pool load and building response, and
f. Chugging pool load and building response.

Equivalent numbers of fatigue cycles were determined for dynamic loads. The 24-in. and 28-in. downcomers were analyzed for the appropriate load combinations and their associated number of cycles as presented in Table 3A.4.1-3. The combined stresses and corresponding equivalent stress cycles were computed to obtain the fatigue usage factor. The maximum fatigue usage factor for both downcomers are presented in Tables 3A.4.2-4 and 3A.4.2-5.

3A.4.2.4 Safety/Relief Valve Piping Systems

The MSRV piping in the suppression chamber consists of 18 independent piping systems, each comprised of 10-in. and 19-in. OD Schedule 80 carbon steel pipe. The wetwell portion of each SRV piping system in the wetwell originates from a 28-in. downcomer (anchor point),

which penetrates at el. 493 ft 0 in., and then runs horizontally for a sufficient length to provide enough thermal flexibility. The horizontal run also allows the quenchers to be distributed evenly about the suppression pool. The piping then drops vertically downward to the quencher body which is bolted to the quencher support at el. 447 ft 0 in. The quencher support is modeled as an integral part of the SRV piping system and as such has flexibility taken into account. A schematic showing a typical SRV piping layout is shown in Figure 3A.4.2-6. Lateral guides are provided at the downcomer bracing.

3A.4.2.4.1 Loads Used for Assessment

The SRV piping systems are subjected to static, dynamic, and hydrodynamic loads due to normal, upset, emergency, and faulted plant operating conditions. The loading cases and combinations are described in Section 3A.3.5.4.

The hydrodynamic loads resulting in significant effects on the SRV piping are listed below. For a description of these loads see Section 3A.4.2.3.1.

a. Deadweight (w),
b. Thermal,
c. Pressure (P),
d. OBE,
e. SSE,
f. SRV pressure (Figure 3A.3.1-9),
g. SRV building response,
h. SRV blowdown,
i. LOCA jet (Figure 3A.3.2-18 and Table 3A.3.2-8),
j. LOCA bubble (Figure 3A.3.2-18 and Table 3A.3.2-8),
k. Chugging drag (Figure 3A.3.2-19), and
l. Chugging building response.

The SRV pressure used in the analysis is applied in the same manner as described in Section 3A.4.2.3.1 for the downcomers. The building response loads are based on the spectra described in Section 3A.5.

3A.4.2.4.2 Load Combination and Acceptance Criteria

The stresses within the SRV piping are acceptable if they satisfy the ASME Boiler and Pressure Vessel Code, Subsection NC. The allowable stress "S_h" used for primary stress evaluation is 15,000 psi. This value was obtained from the tabulated values in Section III, Attachment 3A.I for "S_h" at a design temperature of 475°F for carbon steel.

3A.4.2.4.3 Allowable Stress Limits (Equation 9 of NC-3652 and NC-3611, Reference 3A.4.2-1)

The stress for the SRV piping includes the primary membrane plus the primary bending stresses. The limits of these stresses depend on the loading conditions as follows:

a. The limit of stress under the upset condition is $1.2S_h$ = 18,000 psi,
b. The limit of stress under the emergency condition is $1.8S_h$ = 27,000 psi, and
c. The limit of stress under the faulted condition is $2.4S_h$ = 36,000 psi.

3A.4.2.4.4 Method of Analysis

The SRV piping was analyzed for the appropriate loading combinations (Table 3A.3.5-5) using the computer programs ADLPIPE and ANSYS (Attachment 3A.F). Analysis was performed for all 18 SRV lines. The quencher towers were included in the piping models to account for quencher tower flexibility. The inertial effects of water were accounted for in the same matter as described in Section 3A.4.2.3.3. Analysis results are summarized in Section 3A.4.2.4.5.

3A.4.2.4.4.1 Static Analysis. Static analysis techniques were used to determine the stresses due to dead weight, internal pressure, thermal and hydrodynamic loads using an equivalent static pressure load or an appropriate DLF, as shown in Figure 3A.3.1-10.

3A.4.2.4.4.2 Response Spectrum Analysis. The ADLPIPE program was utilized to perform dynamic response spectra analyses. Modal responses were combined in accordance with Regulatory Guide 1.92 while damping values were selected per Regulatory Guide 1.61.

3A.4.2.4.4.3 Time History Analysis. The ANSYS program was utilized as required for critical SRV lines in order to obtain more realistic piping response for SRV building response loads. For SRV blowdown transient loads, ADLPIPE was used to perform a force time history analysis.

3A.4.2.4.5 Results and Design Margin

The calculated stresses for the design configuration of all SRV piping systems show that the piping is structurally adequate for all plant operating conditions. The maximum calculated stresses and the resulting minimum design margins for the SRV piping systems for the controlling load combinations from Section 3A.3.5.4 are shown below.

Acceptance Criteria from Table 3A.3.5-5	Allowable Stress (psi)	Calculated Stress (psi)	Design Margin
Upset	18,000	17,206	1.05
Emergency	27,000	17,207	1.57
Faulted	36,000	17,280	2.08

Design margin is defined as follows:

$$DM = \frac{\text{Allowable Stress}}{\text{Calculated Stress}}$$

3A.4.2.4.6 Fatigue Evaluations

The fatigue evaluation presented below was an NRC request and is not an ASME requirement.

The fatigue evaluation on all 18 SRV lines in the wetwell air volume was performed using ASME Section III, Class 1 rules (NB-3600). A governing loading scenario, based on the DFFR (Reference 3A.3.2-11), was developed. The loadings which were evaluated are:

a. Internal pressure,
b. Thermal expansion and transients,
c. Seismic,
d. SRV blowdown,
e. SRV pool load and building response, and
f. Chugging pool load and building response.

Equivalent numbers of fatigue cycles were determined for dynamic loads. All 18 SRV discharge lines in the wetwell region were analyzed for the appropriate load combinations and their associated number of cycles as presented on Table 3A.4.1-3. The combined stresses and corresponding equivalent stress cycles were computed to obtain the fatigue usage factor. The maximum fatigue usage factor for all 18 SRV discharge lines in the wetwell air volume was found to be below ASME allowable limits. The results of the maximum usage factors is presented on Table 3A.4.2-6.

3A.4.2.5 Quencher

Quenchers have been installed on the discharge end of the SRV lines to reduce air clearing loads and to promote effective heat transfer between the suppression pool water and the discharging steam-air mixture during SRV actuation. The quenchers are an integral part of the SRV piping system and are bolted to the quencher support at the base plate. The quencher support assessment is included in the SRV piping system assessment, Section 3A.4.2.4.

3A.4.2.5.1 Loads Used for Assessment

The quenchers, in common with the other piping components, are subjected to static, dynamic, and hydrodynamic loads due to normal, upset, emergency, and faulted plant conditions. The loading cases arc described in Section 3A.3.5.4.

The mechanical loads are from Table 3-16 of the DFFR (Reference 3A.4.2-2) and modified to account for CGS plant specific conditions. The load from DFFR Table 3-16, which are not plant specific, are the quencher arm and body loads arising from the SRV water and air clearing transients. These generic bounding loads are described in the DFFR (Reference 3A.4.2-2). The other loads on Table 3A.3-16 of the DFFR are modified to account for (a) quencher arm loads caused by the various submerged hydrodynamic loading described in Section 3A.3, and (b) the static and dynamic loads resulting from the SRV piping system analysis described in Section 3A.4.2.4.

3A.4.2.5.2 Load Combination Acceptance Criteria

The assessment of the quenchers for the plant loads is performed in accordance with ASME Section III, Subsection NC (Reference 3A.4.2-1). The code stamp and hydrotest requirements are not applicable since the quencher is not a pressure retaining component. The code jurisdiction ends at the weld between the SRV discharge piping and the quencher inlet nozzle (12 in. x 24 in. reducer).

3A.4.2.5.3 Evaluation

The quencher body and the quencher arms are examined to determine their adequacy for conditions of loading described above.

The quencher body together with the quencher arms were modeled through finite element program ANSYS. The model uses a quadrilateral shell element which has both bending and membrane capabilities. The element has six degrees of freedom at each node. This element also has an option for variable thickness. The modeled structure is shown in Figures 3A.4.2-7 and 3A.4.2-8.

Element loading capabilities include surface temperatures and pressures. Also, concentrated loads can be applied at each node point. The significant loads affecting quencher body and the quencher arms are

a. The loads arising from the SRV water and air clearing transients,

b. The SRV loads caused by pool velocity and acceleration fields from an adjacent firing quencher, and

c. SRV induced building response loads.

The quencher assembly was analyzed statically with the load vectors related to type of loads as discussed above and for load combinations presented in Section 3A.4.2.5.2. Since the quencher has linear properties the superposition of load combinations was used for evaluation of results.

The calculated stress intensities for the various loading conditions are presented in Table 3A.4.2-3. The tabulated design margins for the governing upset condition indicate the quencher assembly is structurally adequate.

3A.4.2.6 Platforms and Ladders

The assessment of the capacities of the platforms and ladder relative to load combinations involving suppression pool hydrodynamic loads is made in this section.

3A.4.2.6.1 Loads Used for Assessment

Complete description of all hydrodynamic loads has been given in Section 3A.3. The loads used for the assessment of the platforms and ladder are discussed below.

3A.4.2.6.1.1 Safety/Relief Valve Operation Loads. No direct loads on the platforms at el. 472 ft 4 in. and el. 486 ft 8 in. or the ladder between el. 472 ft 4 in. and 490 ft 1 in. result from operation of the SRV system. However, building response to dynamic pressures at the pool boundary during SRV discharge result in dynamic stresses in the platform and ladder components which are supported from the steel containment structure.

3A.4.2.6.1.2 Loss-of-Coolant Accident Loads. As discussed in Section 3A.3.2.3, a LOCA results in pool swell impact and drag loads and fallback drag loads on the platform at el. 472 ft 4 in. and the ladder between el. 472 ft 4 in. and el. 484 ft 4.75 in. Also, the ladder and the knee braces below the platform at el. 472 ft 4 in. are subjected to a horizontal lift load caused by both pool swell and fallback.

Additional LOCA loads include building responses to condensation oscillation and chugging which are obtained from response spectra at tile points of attachment of the platforms and ladder to the containment vessel. Since the condensation oscillation load is bounded by the chugging load, no separate platform assessment has been performed for the condensation oscillation loading condition.

3A.4.2.6.1.3 Other Significant Loads. Other loads which result in significant stresses in the platform and ladder components are dead loads, live loads, and seismic accelerations.

Dead loads include the weights of the platforms and ladder. Live loads include personnel on the platforms and ladder, equipment weights on the platforms, and the monorail loads on the platform at el. 486 ft 8 in. Seismic accelerations are obtained from seismic response spectra at the points of attachment of the platforms and ladder to the containment vessel.

3A.4.2.6.2 Controlling Load Combinations

The load combination criteria for structures internal to the suppression chamber (see Section 3A.3.5.3) are applicable to the platforms and ladder. In particular, the combinations for steel structures using the elastic working stress method are investigated for both service load conditions and factored load conditions.

3A.4.2.6.3 Acceptance Criteria

The acceptable stress level for the platform and ladder components using the elastic working stress method is as defined for the loading combinations in Section 3A.3.5.3.

3A.4.2.6.4 Method of Analysis

Both platforms and the ladder were investigated for the effects of the loading combinations in Section 3A.3.5.3. The components of the platform at el. 472 ft 4 in. and the ladder were analyzed individually, whereas the platform at el. 486 ft 8 in. is above the effects of pool shell and therefore was not reanalyzed. As noted in Section 3A.3.2.3, the grating does not sustain impact loads. Therefore, the only significant load on the grating is the drag load component. The supporting beams and bracing members were analyzed for drag and lift pool swell/fallback loads. The portion of the ladder between el. 472 ft 4 in. and 404 ft 4.75 in. was analyzed for impact loading on the highest rung in the pool swell region and drag and lift on all rungs below the rung with impact.

3A.4.2.6.5 Results

The governing load combination (5a) for steel structures is given below with corresponding input for the platform at el. 472 ft 4 in. and the portion of the ladder between el. 472 ft 4 in. and 484 ft 4.75 in.:

(5a) $1.6S \geq 1.0D+1.0L+1.0E_o+1.0P_A+1.0T_A+1.R_A+1.0P_{SR}$

$D = 0.10$ psi

$L = 0$

$E_o = 0.11$ psi

P_A = 8.4 psi (drag on gross area of grating)

= 25.0 psi (drag on ladder rungs and bracing members)

= 44.0 psi (impact on ladder rungs)

= small (horizontal lift pressure on supporting bars and handrail members)

= 11.0 psi (horizontal lift pressure on bracing members)

= 5.0 psi (horizontal lift pressure on ladder rungs)

= small (impact and drag on supporting bars and handrail members)

T_A = 0

R_A = 0

P_{SR} = 0.05 psi

where D, L, E_o, P_A, T_A, R_A, and P_{SR} are as defined in Section 3A.3.5.2.

The portion of the ladder between el. 472 ft 4 in. and 484 ft 4.75 in. was found to have sufficient capacity to withstand the governing load combination with a design margin (i.e., ratio of the allowable stress to the maximum absolute calculated stress) of 2.15. However, the existing platform at el. 472 ft 4 in. was found to be deficient (under the above load combination. The critical component is the grating under upward load. To make the grating sufficient, every other bearing bar (instead of every fourth as is in the original design) has been welded to all supporting members including the platform member supporting the ladder. With this reinforcement a design margin for the grating of 1.80 is attained. Also, two platform members have been reinforced, and the rectangular bracing members have been replaced with circular members. With this reinforcement the critical supporting member has a design margin of 1.18.

3A.4.2.7 References

3A.4.2-1 ASME Boiler and Pressure Vessel Code, Section III, Division 1, Subsection NC, "Class 2 Components," American Society of Mechanical Engineers, 1971 through Winter 1973 Addenda.*

* Faulted conditions appeared first in Winter 1976 Addenda.

3A.4.2-2 Mark II Containment Dynamic Forcing Functions Information Report (DFFR), NEDO-21061, Revision 2, September 1976.

Table 3A.4.2-1

Downcomer Bracing System Controlling Design Margins

Component	Service Load Conditions Maximum Horizontal Loading	Factored Load Maximum Horizontal Loading	Conditions Maximum Vertical Loading
6 in. D.E.S. pipe	3.45		2.96
4 in. D.E.S. pipe	2.5		1.68
Pedestal connection	2.00	2.02	
Vessel connection	5.26		2.75
Downcomer ring	1.92	1.95	
SRV line ring	3.39	4.12	

Notes:

1. For service load conditions, load combination (1) controls. Only maximum horizontal loading is applicable.

2. For factored load conditions, load combination (5) controls. Only the design margin for the controlling loading is listed.

Table 3A.4.2-2

Controlling Stress Resultants in Column

		Shear (kips)		Axial Force[a] (kips)	
	Base Moment (ft kips)	Base	Top	Base	Top
Safety/Relief Valve Actuation					
All valves initial	771.1	70.2	41.4	±102.1	±86.4
1 valve subsequential	1133.0	94.9	48.9	±37.1	±37.1
Loss-of-Coolant Accident					
Chugging	13.5	2.5	1.4	±11.7	±10.2
Annulus pressurization	136.4	11.1	6.5	±6.4	±5.3
Pipe break jet				±745.0	±745.0
Pool swell				-172.0	-172.0
Transient pressure difference (drywell-wetwell)				+642.0	+642.0
Seismic					
Operating basis earthquake	127.1	9.9	5.7	±31.2	±27.1
Safe shutdown earthquake	164.2	12.8	7.4	±46.1	±39.6
Dead				+229.0	+134.0
Live				+217.0	+217.0

[a] Positive axial force is compressive; negative is tensile.

Table 3A.4.2-3

Results Summary - Safety/Relief Valve Quencher

Loading Condition	Stress Category	Principal Stress (psi) 1	2	3	Critical Stress Intensity (psi)	Allowable Stress (psi)	D.M. (1)
Normal	P_m	2525	1390	-275	2800	15,978	5.71
	P_L	11,092	1204	-275	11,367	23,967	2.11
	$P_L + Q$	13,678	1052	0	13,678	47,934	3.50
Upset	$P_L + Q$	28,399	6985	0	38,399	47,934	1.25
	P_m	4102	535	-275	4377	17,576	4.01
	P_L	13,480	2540	-275	13,755	26,364	1.92
Emerge	P_m	3989	1392	-275	4264	23,967	5.62
	P_L	16,964	1711	-275	17,239	28,761	1.67
Fault (1)	P_m	3994	1395	-275	4267	31,956	7.48
	P_L	16,982	1712	-275	17,257	38,347	1.99
Fault (2)	P_m	3334	1223	-275	3609	31,956	8.85
	P_L	14,738	1633	-275	15,013	33,347	2.55

[a] Generally the maximum stresses occurs between the quencher arms, where the arms meet the body.

Notes:

1. Design margin is defined as follows:

$$DM = \frac{\text{Allowable Stress}}{\text{Calculated Stress}}$$

2. The definition of the above terms is proved in ASME Code Section III, Paragraph NC-3217 of Winter 1976 Addenda.

Table 3A.4.2-4

Cumulative Usage Factor Calculation at 24 in. Downcomer Anchor

Load Combination[a] Set	Expected Number of Cycles (ni)	Bending Moment Mi lb/ft	Peak Stress Sp (psi)	Alt. Stress Salt (psi)	Allowable Number of Cycles N	Calculated Usage Factor $Ui = \frac{ni}{Ni}$
1	1	244,008	60,116	30,058	20,000	0.0001
2	9	244,008	32,575	16,288	200,000	0.0001
3	50	202,180	26,991	13,496	300,000	0.0002
4	940	216,065	28,845	14,422	300,000	0.0031
5	12,434	183,244	24,463	12,232	400,000	0.0311
				Cumulative Usage Factor U = 0.0346 < 1.0		

[a] Load combination set definition

1 - NPC + LOCA + SSE + SRV + CHUGGING

2 - SSE + SRV + CHUGGING

3 - OBE + SRV

4 - SRV + CHUGGING

5 - SRV

Table 3A.4.2-5

Cumulative Usage Factor Calculation at 28 in. Downcomer Anchor

Load Combination[a] Set	Expected Number of Cycles (ni)	Bending Moment Mi lb/ft	Peak Stress Sp (psi)	Alt. Stress Salt (psi)	Allowable Number of Cycles N	Calculated Usage Factor $Ui = \frac{ni}{Ni}$
1	1	346,771	61,562	30,781	18,000	0.0001
2	9	346,771	33,775	16,888	150,000	0.0001
3	50	307,359	29,937	14,968	200,000	0.0002
4	940	557,714	54,321	27,161	30,000	0.0313
5	12,434	275,671	26,850	13,425	400,000	0.0311
				Cumulative Usage Factor U= 0.0629 < 1.0		

[a] Load combination set definition

1 - NPC + LOCA + SSE + SRV + CHUGGING

2 - SSE + SRV + CHUGGING

3 - OBE + SRV

4 - SRV + CHUGGING

5 - SRV

Table 3A.4.2-6

Maximum Usage Factors Table

	First Actuation	Second Actuation	Subsequent Actuations	Total Cumulative Usage Factor
Low set SRV lines (MSRV-1C) (MSRV-1B)	0.626	0.033	0.237	0.896
Non-low-set SRV lines	0.527	0.202	N/A	0.729

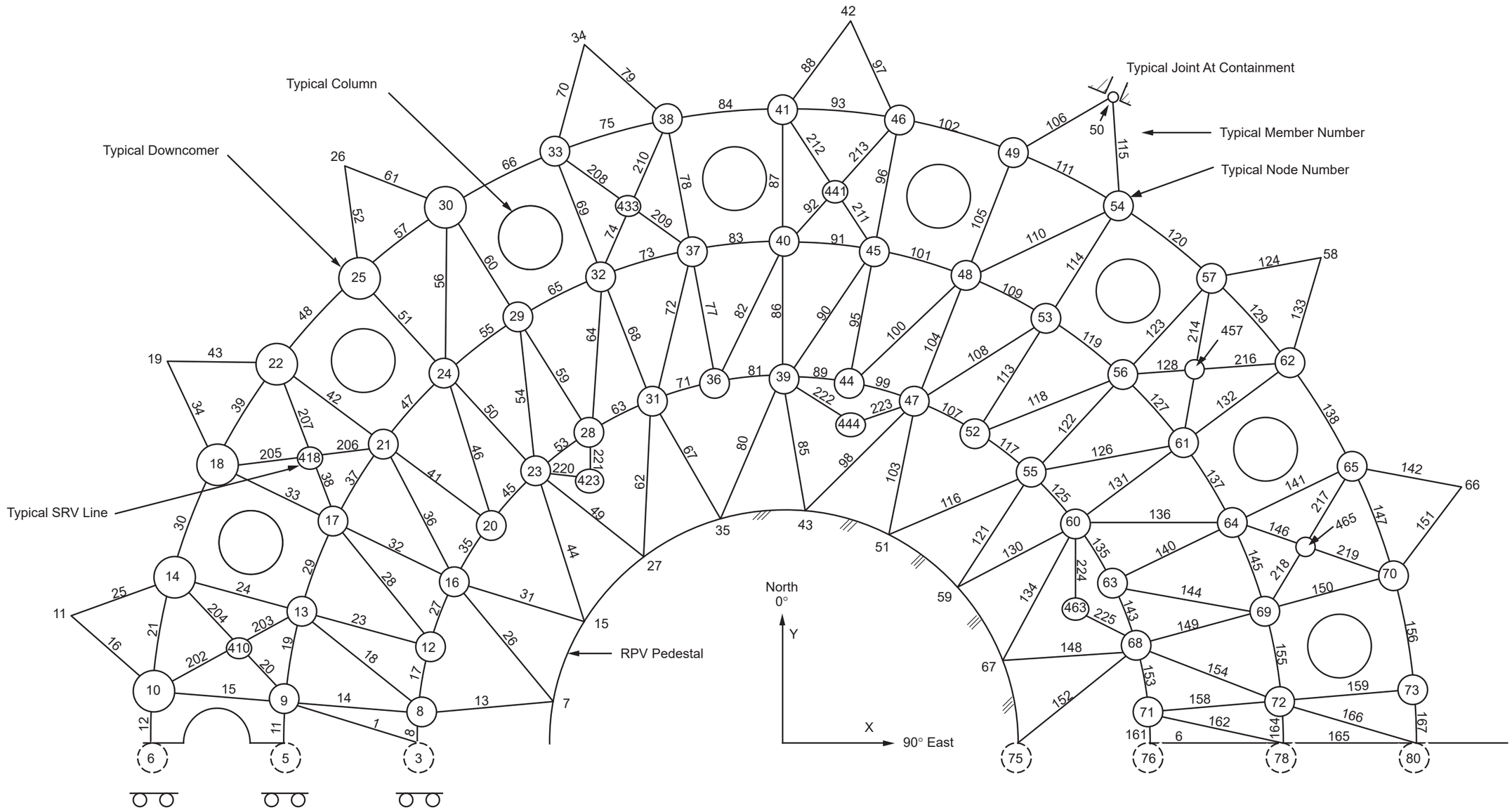

Columbia Generating Station **Final Safety Analysis Report**	**Downcomer Bracing System - Model For Structural Analysis**	
	Draw. No. **950021.61**	Rev.
		Figure **3A.4.2-2**

Form No. 960690

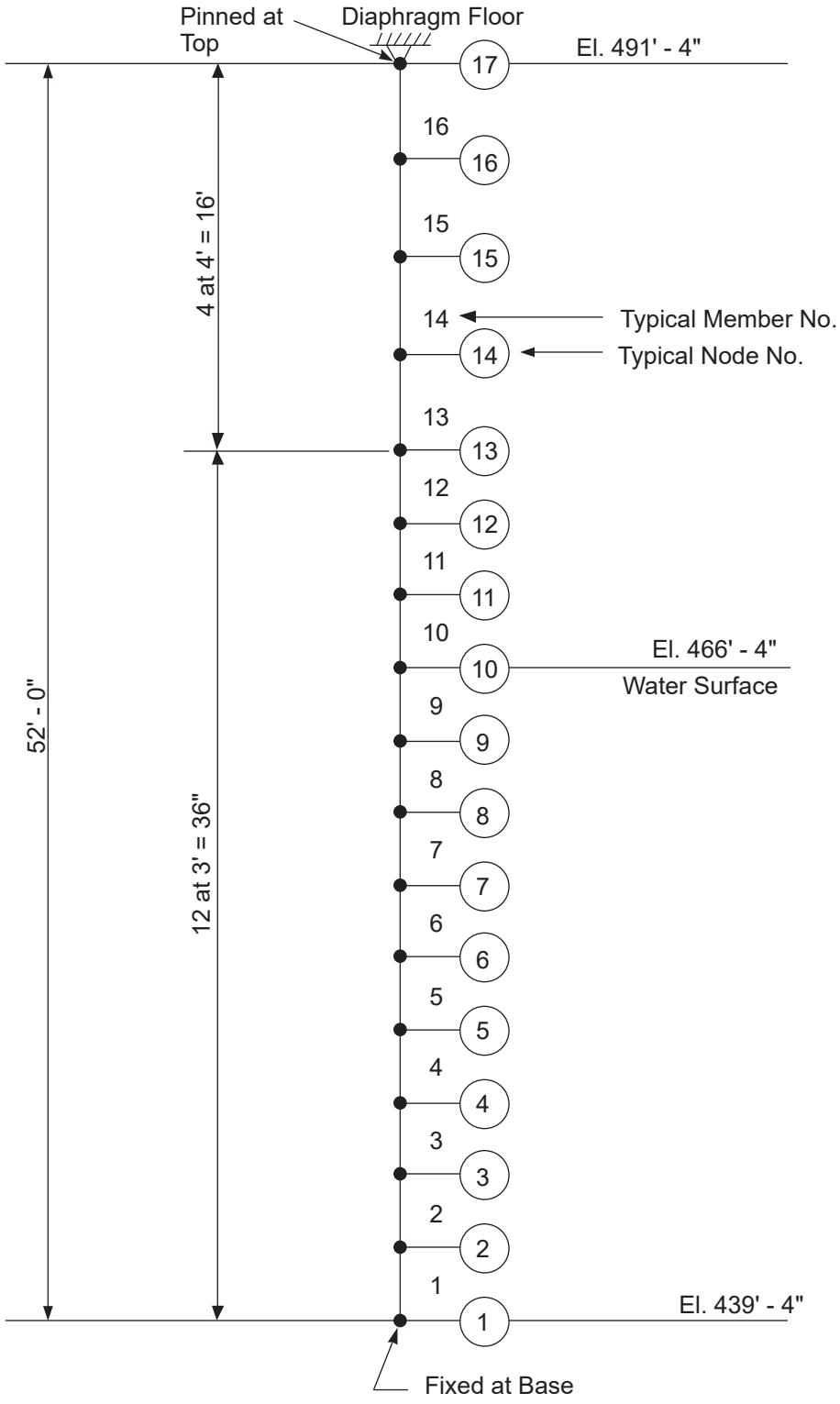

Model for Horizontal Loads

Columbia Generating Station Final Safety Analysis Report	**Diaphragm Floor Column Model for Dynamic Analysis**		
	Draw. No. 950021.62	Rev.	Figure 3A.4.2-4

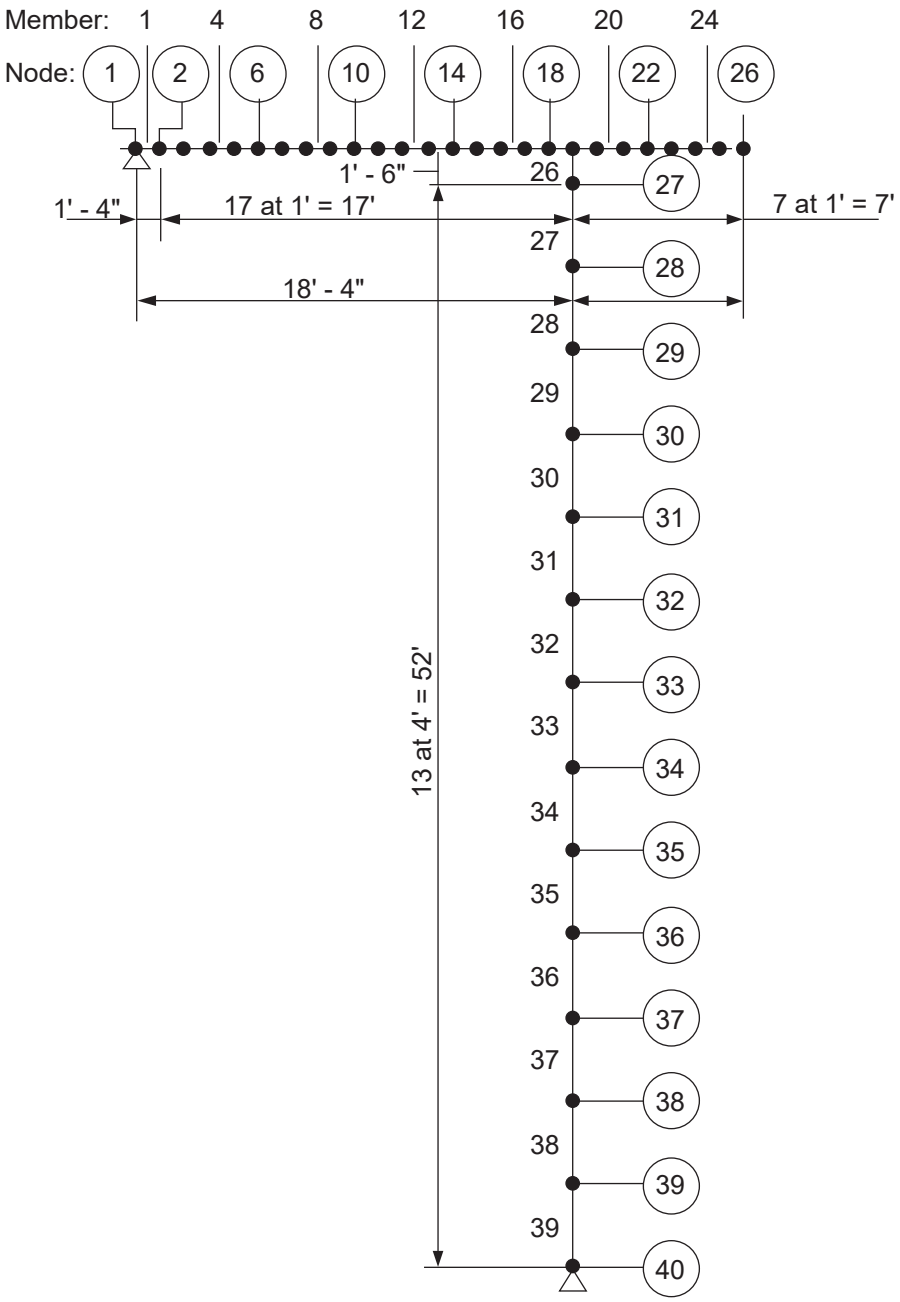

Model for Vertical Loads

Columbia Generating Station Final Safety Analysis Report	Structural Model of Diaphragm Floor Beam and Column		
	Draw. No. 950021.63	Rev.	Figure 3A.4.2-5

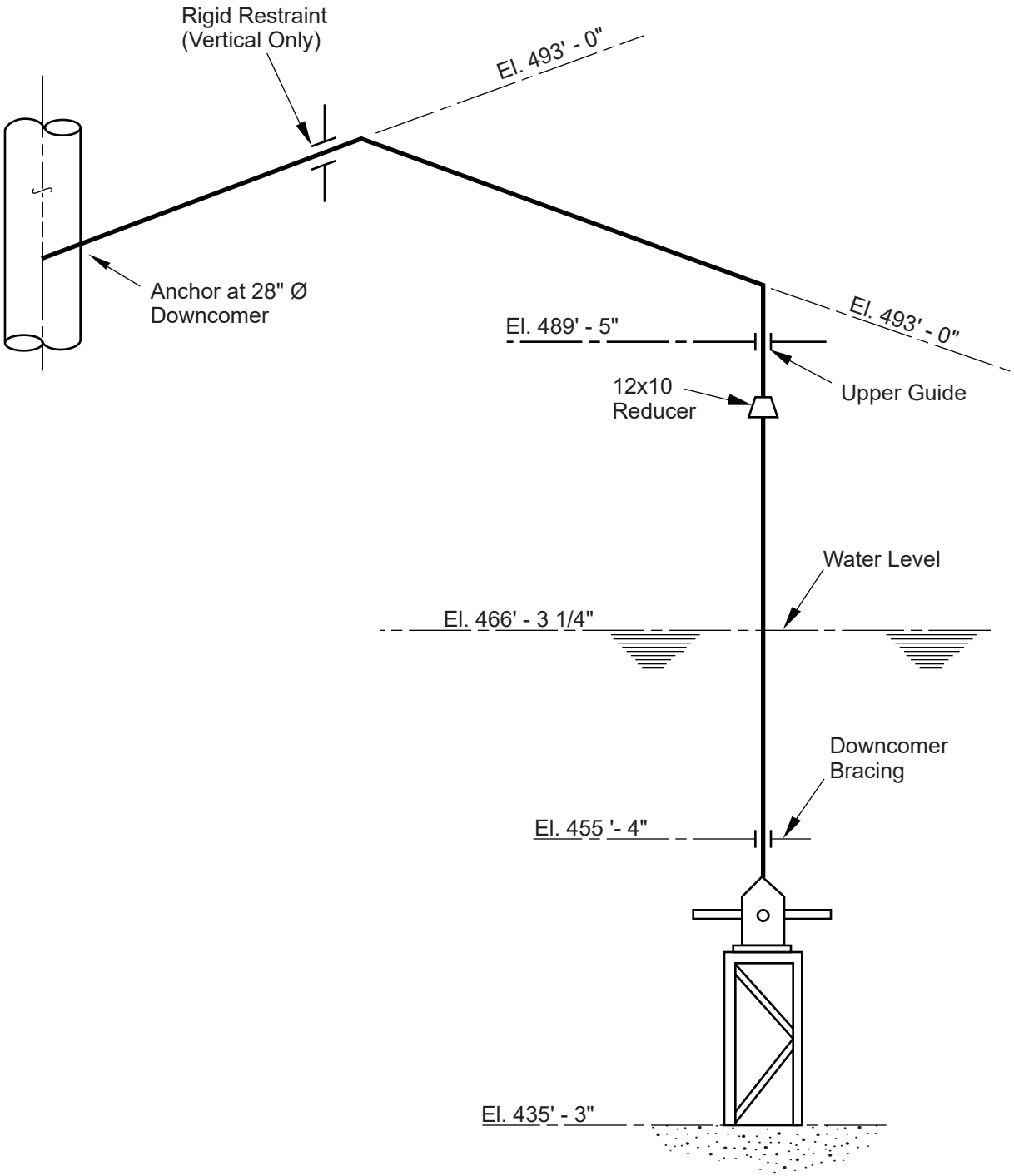

Columbia Generating Station Final Safety Analysis Report	SRV Piping System Inner Ring Quencher Support		
	Draw. No. 960222.91	Rev.	Figure 3A.4.2-6

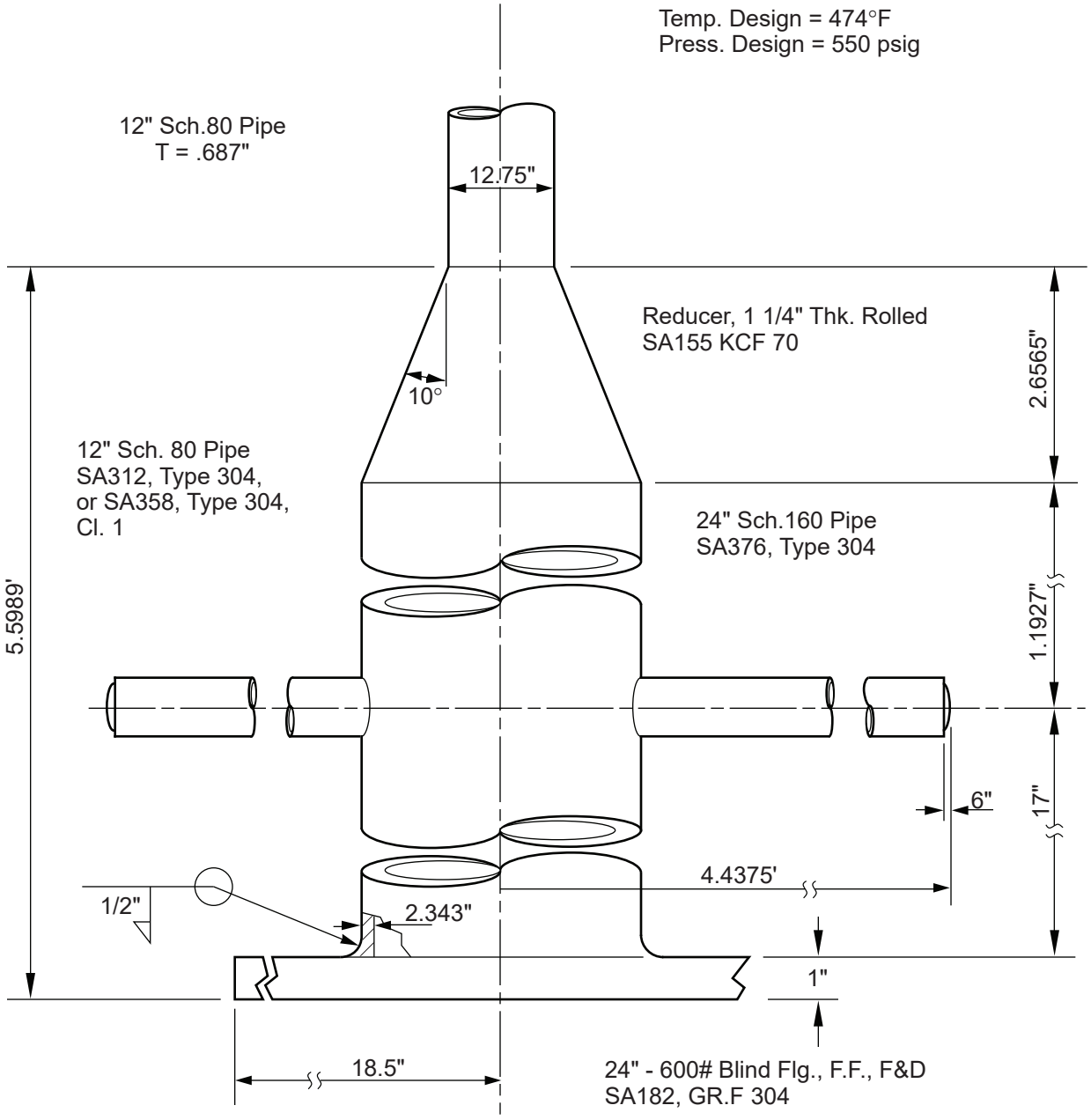

Quencher Assembly

Columbia Generating Station
Final Safety Analysis Report

Draw. No. 960222.92	Rev.	Figure 3A.4.2-7

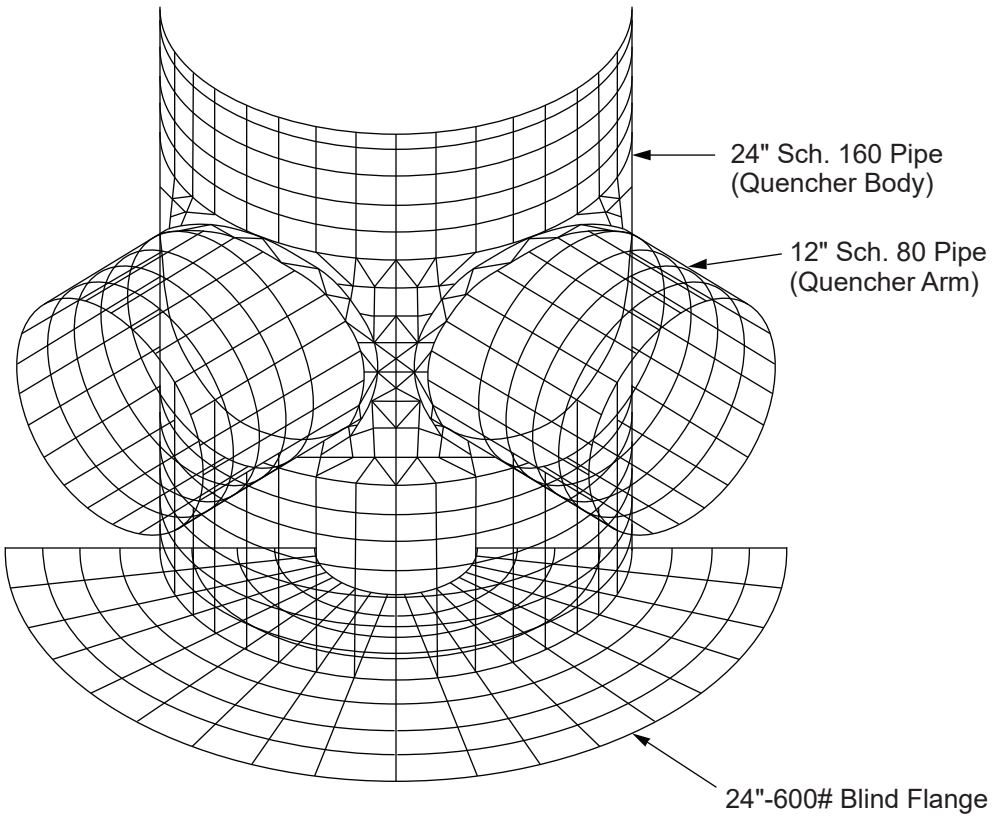

Columbia Generating Station
Final Safety Analysis Report

SRV Quencher Assembly

Draw. No. 960222.93	Rev.	Figure 3A.4.2-8

3A.4.3 MISCELLANEOUS SUPPRESSION POOL PIPING SYSTEMS

A tabulation of the miscellaneous systems located in the suppression chamber is given in Table 3A.4.3-1. The results of the stress analysis for suppression pool piping other than SRV piping and downcomers is presented in Table 3A.4.3-3.

Depending upon the location in the wetwell, the suppression pool piping will be subjected to different loading associated with SRV discharge and LOCA. For identification purposes, the miscellaneous wetwell piping has been broken into four zones, i.e., fully submerged piping, partially submerged piping, piping in the pool swell zone, and piping above the pool swell zone (Figure 3A.4.3-1). Piping in each zone is noted in Table 3A.4.3-1.

3A.4.3.1 Loads Used for Assessment

The wetwell piping systems are subjected to static, dynamic, and hydrodynamic loads due to normal, upset, emergency, and faulted plant operating conditions. Each zone is characterized by certain applicable loads shown in Table 3A.4.3-2. A description of each of these loads is provided in Sections 3A.3 and 3A.5.

3A.4.3.2 Load Combination and Acceptance Criteria

The design limits, as set forth in the ASME Boiler and Pressure Vessel Code (ASME Code) Section III, Subsection NC (Reference 3A.4.2-1) were utilized for the assessment of the suppression pool piping systems. The various piping systems are considered acceptable if they satisfy the equations of Paragraph NC-3652 of Section III of the ASME Code.

The piping, as listed on Table 3A.4.3-1, is fabricated of low alloy carbon steel pipe having an allowable stress "S_h" primary evaluation of 15,000 psi up to a temperature of 275°F.

Allowable Stress Limits (Equation 9 of NC-3652 and NC-3611, Reference 3A.4.2-1)

The stress for the miscellaneous wetwell piping includes the primary membrane plus bending stresses. The limits of these stresses, depending on loading conditions, are the same as those listed in Section 3A.4.2.4.3.

3A.4.3.3 Method of Analysis

The miscellaneous suppression pool piping systems were analyzed for the appropriate loading combinations using ADLPIPE and ANSYS computer programs (Attachment 3A.F). Hand calculation methods were used to analyze short cantilevered pipes attached to the primary containment. Static and response spectrum analyses were handled in the same manner as described in Section 3A.4.2.3.3. However, displacement time history analyses were performed, as required, to obtain more realistic piping responses due to SRV building response

loads. For residual heat removal (RHR) blowdown transient loads, ADLPIPE was used to perform force time history analysis.

3A.4.3.4 Results and Design Margins

Table 3A.4.3-3 presents pipe stress results and design margins for piping systems in the wetwell. The pipe supports for the wetwell were also assessed and determined to be within acceptable limits.

Table 3A.4.3-1

Miscellaneous Wetwell Piping

Ref. Penetration Number X-	Line/Description	Penetration Elevations	Penetration Azimuths	Remarks
Zone I - Fully Submerged Piping				
33	8 in. RCIC Pump Suction	452 ft-0 in.	336°	
100	6 in. Fuel pool cleanup	452 ft-0 in.	295°	
35	24 in. RHR pump “A” suction	452 ft-0 in.	276° - 49 ft	Similar in config. to X-32
32	24 in. RHR pump “B” suction	452 ft-0 in.	263° - 11 ft	
31	24 in. HPCS pump suction	452 ft-0 in.	97° - 36 ft	
34	24 in. LPCS pump suction	452 ft-0 in.	66° - 05 ft	Similar in config. to X-36
36	24 in. RHR pump C suction	452 ft-0 in.	45° - 39 ft	
88	3 in. instrumentation	455 ft-0 in.	180°	
86B	2 in. instrumentation	462 ft-0 in.	45°	Short length of pipe
87B	2 in. instrumentation	462 ft-0 in.	245°	Short length of pipe
N/A	4 in. FPC - SYPHON	N/A	N/A	
Zone II - Partially Submerged Piping				
64	1.5 in. RCIC vacuum pump discharge	467 ft-9 in.	345°	Similar in config. to X-65
4	10 in. RCIC line (24 in. header)	467 ft-9 in.	318°	
65	2 in. RCIC pump min. flow	467 ft-9 in.	312°	
101	6 in. RPC test	467 ft-9 in.	0°	
47	18 in. RHR pump A test	467 ft-9 in.	288.7°	Similar in config. to X-48
117	18 in. RHR pressure relief	467 ft-9 in.	279°	Similar in config. to X-11B
118	18 in. RHR pressure relief	467 ft-9 in.	261°	
48	18 in. RHR pump B test	467 ft-9 in.	251.29°	
23	3 in. EDR equipment drain	467 ft-9 in.	132°	
24	3 in. FDR floor drain	467 ft-9 in.	111°	
49	12 in. HPCS pump test	467 ft-9 in.	103° - 31 ft	
63	12 in. LPCS pump test	467 ft-9 in.	60°	Similar in config. to X-49
26	18 in. RHR pump “C” test	467 ft-9 in.	20°	

Table 3A.4.3-1

Miscellaneous Wetwell Piping (Continued)

Ref. Penetration Number X-	Line/Description	Penetration Elevations	Penetration Azimuths	Remarks
Zone III - Pool Swell Zone				
87A	2 in. instrumentation	471 ft-6 in.	245°	Short length of pipe
86A	2 in. instrumentation	471 ft-6 in.	45°	Short length of pipe
51	42 in. HATCH	473 ft-6 in.	155°	Short length of pipe
107B	12 in. electrical line	475 ft-0 in.	240°	Short length of pipe
107A	12 in. electrical line	475 ft-0 in.	52° - 30 ft	Short length of pipe
66	24 in. CSP	475 ft-0 in.	222° - 30 ft	Short length of pipe
116	12 in. RCIC	477 ft-6 in.		Short length of pipe
81	14 in. instrumentation	479 ft-4 in.	235°	Short length of pipe
82	10 in. CAS	479 ft-4 in.	230°	
83	10 in. instrumentation	479 ft-4 in.	240°	
84	10 in. instrumentation	479 ft-4 in.	40°	Similar in config. to X-83
Zone IV - Above Pool Swell Zone				
67	24 in. CEP	491 ft-0 in.	0°	Short length of pipe
102	6 in. Plugged (4 in. CAC pipe)		240°	Short length of pipe
103	6 in. Plugged (4 in. CAC pipe)		180°	Short length of pipe
104	6 in. Plugged (4 in. CAC pipe)		323°	Short length of pipe
105	6 in. Plugged (4 in. CAC pipe)		140°	Short length of pipe
57	12 in. SPARE		47°	Short length of pipe
58	12 in. Hardened Containment Vent		132°	
59	12 in. SPARE		258°	Short length of pipe
60	12 in. SPARE		280°	Short length of pipe
25A	6 in. RHR		70°	
25B	6 in. RHR		235° - 30 ft	
119	24 in. vacuum breaker		151°	Short length of pipe

Table 3A.4.3-2

Piping Zone Versus Loads

Loading	Zone			
	Fully Submerged	Partially Submerged	Pool Swell Zone	Above Pool Swell Zone
Deadweight	X	X	X	X
Thermal	X	X	X	X
Pressure	X	X	X	X
Operating basis earthquake	X	X	X	X
Safe shutdown earthquake	X	X	X	X
SRV pressure	X	X		
SRV response spectra	X	X	X	X
LOCA jet	X	X		
LOCA bubble	X	X		
Pool swell and fallback	X	X	X	
Chugging pressure	X	X		
Chugging response spectra	X	X	X	X

Table 3A.4.3-3

Summary of Results and Design Margins for
Miscellaneous Wetwell Piping

Penetration Number	Controlling Load Case	Allowable Stress (psi)	Calculated Stress (psi)	Design Margin
X-33	Upset	18,000	12,264	1.46
X-100	Upset	18,000	5,231	3.44
X-32	Upset	18,000	9,923	1.81
X-31	Upset	18,000	14,096	1.28
X-36	Upset	18,000	11,687	1.54
X-4	Emergency	27,000	14,453	1.86
X-101	Faulted	36,000	19,826	1.81
X-47 and X-117	Emergency	27,000	16,952	1.59
X-23	Upset	18,000	13,963	1.28
X-49	Emergency	27,000	13,001	2.07
X-26	Emergency	27,000	19,580	1.37
X-24	Emergency	27,000	19,344	1.39
X-35	Upset	18,000	9,923	1.81
X-34	Upset	18,000	17,939	1.003
X-48 and X-118	Emergency	27,000	24,400	1.03[a]
X-58	Upset	18,000	7,948	2.26
		For Most Severe Condition		
X-104	Emergency	27,000	17,687	1.53
X-82	Upset	18,000	14,388	1.25
X-25A and X-25B	Upset	18,000	17,500	1.03[b]

Table 3A.4.3-3

Summary of Results and Design Margins for
Miscellaneous Wetwell Piping (Continued)

Penetration Number	Controlling Load Case	Allowable Stress (psi)	Calculated Stress (psi)	Design Margin
X-83	Faulted	44,640	33,084	1.35
X-84	Faulted	44,640	33,084	1.35
X-88	Upset	22,700	16,508	1.37
X-63	Faulted	36,000	6,220	5.78
X-64	Upset	18,000	15,193	1.19
X-65	Upset	18,000	14,271	1.26
4 in. FPC	Upset	18,000	2,774	6.49

[a] The design margin for this line in reality is larger because of the conservative approach taken, that the flexibility of the containment was not considered for the governing load in this case - RHR transient.

[b] The design margin for this line is also larger due to conservatism in the envelope spectrum analysis for SRV and chugging as compared to multi-input or time-history analysis that could have been utilized.

Notes:

1. The effects of short pipes cantilevered from the containment to hydrodynamic loads is considered minimal. These short stubs are listed in Table 3A.4.3-1.

2. The information provided within this table are the maximum stresses between the nozzle and the termination of the pipe within the wetwell.

3. Results of the stresses at the shell will be provided later.

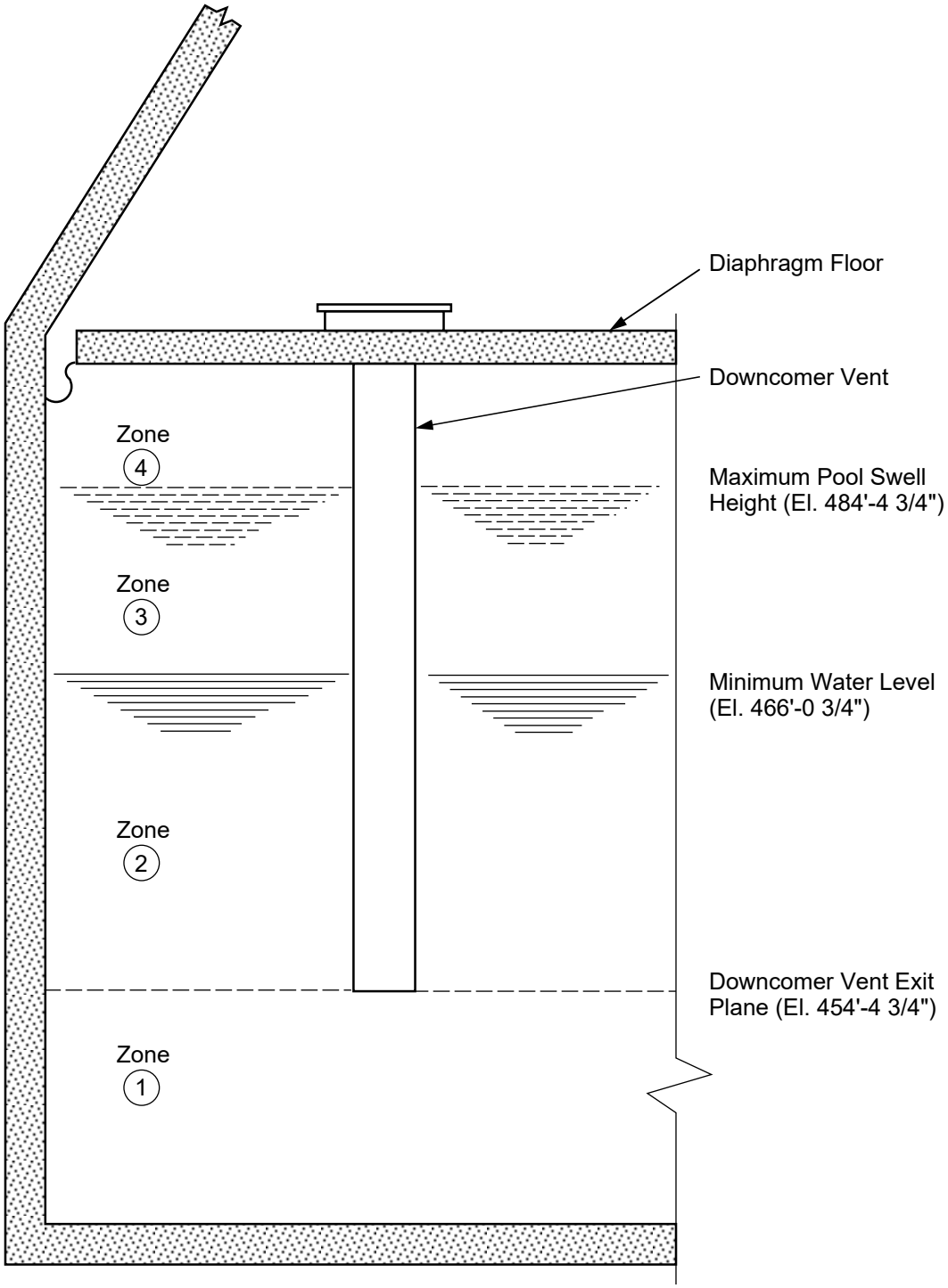

Columbia Generating Station
Final Safety Analysis Report

Hydrodynamic Loading Zones

Draw. No. 960222.94	Rev.	Figure 3A.4.3-1

3A.5 EFFECTS DUE TO BUILDING RESPONSES TO SAFETY/RELIEF VALVE DISCHARGE AND LOSS-OF-COOLANT ACCIDENT LOADS

Response spectra generated at each floor location define the input motions used for qualification and assessment of all the safety-related piping and equipment. In load combinations which include safety/relief valve (SRV) discharge and seismic loads, or loss-of-coolant accident (LOCA) steam condensation and seismic loads, seismic response spectra based upon a finite element soil-structure model were used in design and plant assessments for structures, piping, and equipment. The use of the finite element soil-structure model generally results in lower structural responses than the soil spring and dashpot model used in the original seismic design.

3A.5.1 BUILDING RESPONSES TO SAFETY/RELIEF VALVE DISCHARGE LOADS

This section presents the dynamic responses of the containment and internal structures subjected to loads resulting from SRV discharge as defined in Section 3A.3.1.3. The analytical model and method of analysis for determining the building structural response to SRV discharge loads are described in the following sections.

3A.5.1.1 Analytical Model

3A.5.1.1.1 Overall Building Model

Figure 3A.5.1-1a presents the soil-structure model. Figure 3A.5.1-1b presents the axisymmetric overall building model of the CGS reactor building. It should be noted that the thick reactor pressure vessel (RPV) pedestal and building mat were accounted for in the model by utilizing multiple layer axisymmetric solid elements.

These models were utilized to determine the response to the loading conditions stated in Section 3A.3, and provided responses at the RPV pedestal, foundation mat, biological shield wall, and in the reactor building walls and floors outside of primary containment.

3A.5.1.1.2 Steel Containment Shell Model

Figure 3A.5.1-2 shows the more refined three-dimensional finite element model of the containment shell. This model is interconnected to the rest of the building at the basemat (el. 446 ft), diaphragm floor (el. 503 ft), stabilizer truss (el. 565 ft), and the refueling bellows (el. 583 ft).

3A.5.1.2 Method of Analysis

The containment shell model was analyzed for SRV rigid wall pressure loads acting on the wetwell boundary and specified displacements at all the points where the shell is connected to

the rest of the building. The displacements were obtained from the solutions of the overall building model. The refined containment shell model, as discussed in Section 3A.5.1.1.2, was used to determine the response of the steel shell.

A more detailed discussion of the two models, analytical approach, and results are found in "SRV Loads - Improved Definition and Application Methodology" (Reference 3A.3.1-1).

3A.5.1.3 Safety/Relief Valve Discharge Load Cases

Several SRV discharge cases were considered for CGS design evaluation as discussed below.

3A.5.1.3.1 Response to All Valve Discharge

All 18 SRVs are conservatively assumed to discharge during certain plant conditions.

Two design conditions are associated with all the valves discharge case - the "axisymmetric" condition and the "nearly symmetric" condition. Each of these loading conditions is applied in load combinations involving the all valves discharge case. The axisymmetric loading condition assumes all valves will discharge simultaneously in the pool, thus maximizing the response of the axisymmetric features of the containment and reactor pedestal. The nearly symmetric loading condition assumes some imbalance may occur during actuation of all SRVs. The imbalance may occur from sequential discharging at different set points, variability in valve opening time, differences in SRV discharge line geometry, etc.

Listed below is a sample of the response spectra used in plant assessments involving the axisymmetric loading condition. For the "nearly symmetric" loading condition, the response spectra used are constructed by adding 0.5 times the axisymmetric response spectra to 0.6 times the single valve response spectra.

Location	Direction	Figure
Top of RPV Pedestal, el. 520 ft Mass No. 44	Radial	3A.5.1-3a, 3A.5.1-3b
Top of RPV Pedestal, el. 520 ft Mass No. 44	Vertical	3A.5.1-4a, 3A.5.1-4b
Basemat at RPV Pedestal, el. 435 ft Mass No. 141	Radial	3A.5.1-5a, 3A.5.1-5b
Basemat at RPV Pedestal, el. 435 ft Mass No. 141	Vertical	3A.5.1-6a, 3A.5.1-6b

Top of Sac. Shield Wall, el. 567 ft Mass No. 14	Radial	3A.5.1-7a, 3A.5.1-7b
Top of Sac. Shield Wall, el. 567 ft Mass No. 14	Vertical	3A.5.1-8a, 3A.5.1-8b
RPV, el. 545 ft Mass No. 27	Radial	3A.5.1-9a, 3A.5.1-9b
RPV, el. 545 ft Mass No. 27	Vertical	3A.5.1-10a, 3A.5.1-10b
Containment Vessel, el. 547 ft Mass No. 60600	Radial	3A.5.1-11a, 3A.5.1-11b
Containment Vessel, el. 547 ft Mass No. 60600	Vertical	3A.5.1-12a, 3A.5.1-12b
Containment Vessel, el. 448 ft Mass No. 50100	Radial	3A.5.1-13a, 3A.5.1-13b
Containment Vessel, el. 448 ft Mass No. 50100	Vertical	3A.5.1-14a, 3A.5.1-14b

Notes:
1. Figures denoted “a” refer to the conventional [single frequency pressure (SFP)] load case while the figures denoted “b” refer to the multiple frequency pressure (MFP) load case (see Reference 3A.3.1-1 for details).

2. The tangential loads were also utilized in the assessment of CGS. The tangential values are not included in this submittal as they are much smaller in magnitude then the presented valves.

3A.5.1.3.2 Automatic Depressurization System Valves Discharge Case

This case corresponds to the discharge of the SRVs of the automatic depressurization system (ADS) which are automatically actuated. For assessment purposes, the more conservative all valves response spectra values were utilized.

3A.5.1.3.3 Two Valves Discharge Case

In this case, two SRVs are considered to discharge concurrently through two adjacently located quenchers. For assessment purposes, the more conservative single outer valve discharge response spectra were utilized.

3A.5.1.3.4 Single Valve Discharge

The single outer quencher discharge, which is less likely to happen, is considered in the assessment because it is found to be more conservative, both for containment and pedestal response.

Location	Direction	Figure
Top of RPV Pedestal, el. 520 ft Mass No. 44	Radial	3A.5.1-15a, 3A.5.1-15b
Top of RPV Pedestal, el. 520 ft Mass No. 44	Vertical	3A.5.1-16a, 3A.5.1-16b
Basemat at RPV Pedestal, el. 435 ft Mass No. 141	Radial	3A.5.1-17a, 3A.5.1-17b
Basemat at RPV Pedestal, el. 435 ft Mass No. 141	Vertical	3A.5.1-18a, 3A.5.1-18b
Top of Sac. Shield Wall, el. 567 ft Mass No. 14	Radial	3A.5.1-19a, 3A.5.1-19b
Top of Sac. Shield Wall, el. 567 ft Mass No. 14	Vertical	3A.5.1-20a, 3A.5.1-20b
RPV, el. 545 ft Mass No. 27	Radial	3A.5.1-21a, 3A.5.1-21b
RPV, el. 545 ft Mass No. 27	Vertical	3A.5.1-22a, 3A.5.1-22b
Containment Vessel, el. 547 ft Mass No. 60600	Radial	3A.5.1-23a, 3A.5.1.23b
Containment Vessel, el. 547 ft Mass No. 60600	Vertical	3A.5.1-24a, 3A.5.1-24b

Containment Vessel, el. 448 ft Mass No. 50100	Radial	3A.5.1-25a, 3A.5.1-25b
Containment Vessel, el. 448 ft Mass No. 50100	Vertical	3A.5.1-26a, 3A.5.1.26b

Notes:

1. Figures denoted "a" refer to the conventional (SFP) load case while the figures denoted "b" refer to the MFP load case (see Reference 3A.3.1-1 for details).

2. The tangential loads were also utilized in the assessment of CGS. The tangential values are not included in this submittal as they are much smaller in magnitude then the presented valves.

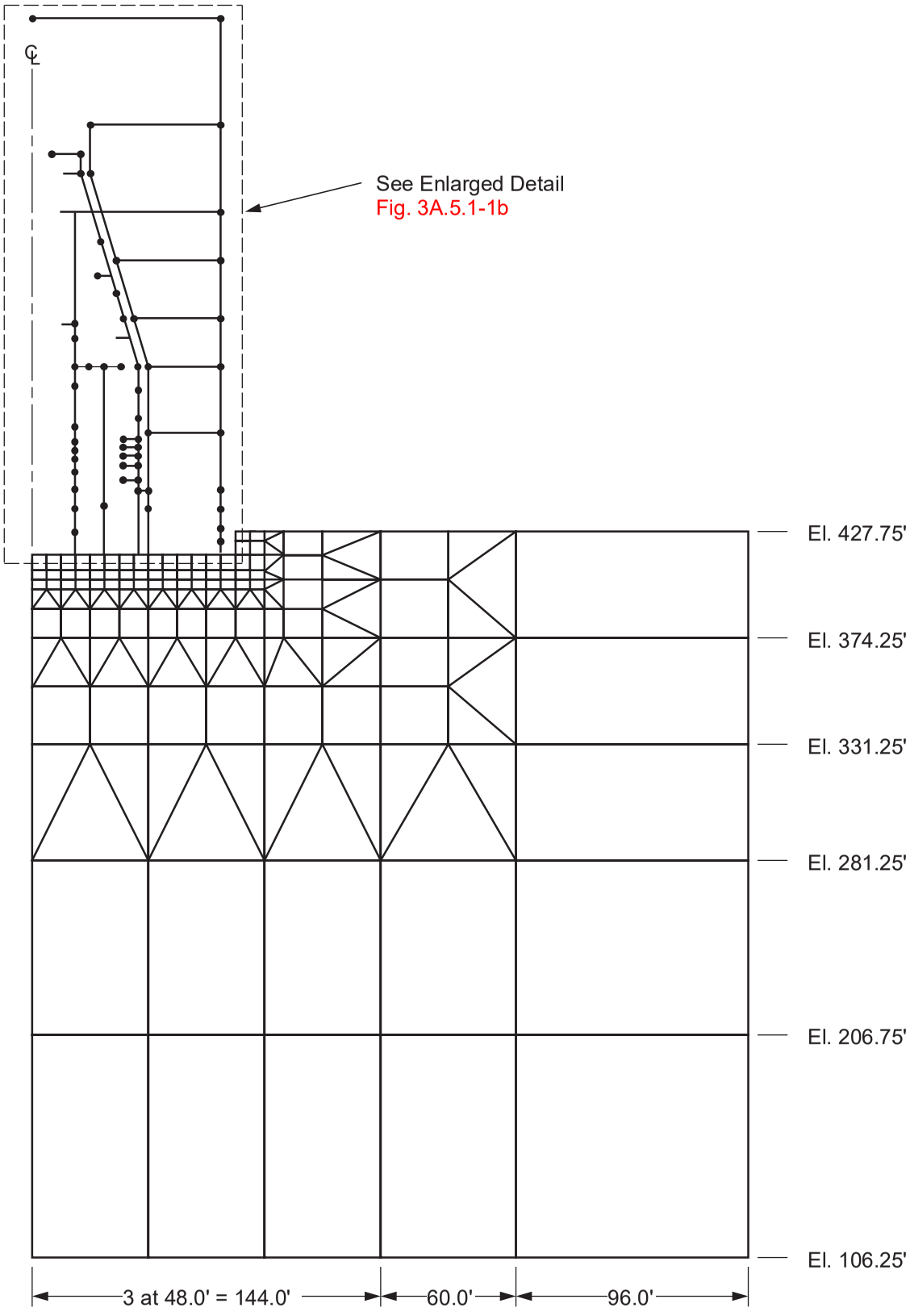

Columbia Generating Station Final Safety Analysis Report	Axisymmetric Model of the Reactor Building and Soil Foundation		
	Draw. No. 960222.95	Rev.	Figure 3A.5.1-1a

3A.5.2 BUILDING RESPONSES TO LOSS-OF-COOLANT ACCIDENT LOADS

The analysis of the containment under the action of long-term LOCA loads and the resultant responses are described in this section. The LOCA loads considered are those described in Section 3A.3.2.4, namely, chugging and condensation oscillation. However, the condensation oscillation load is not a governing load as compared to the chugging load, therefore it was not considered in the design assessment. The discussion in this section applies to the effects of chugging only. A complete definition of the chugging loads and the methodology of their application to the reactor building is contained in Reference 3A.3.2-15.

3A.5.2.1 Analytical Model

The mathematical model used for the analysis of the structure subjected to chugging loads includes the reactor building and the supporting soil. The model of the reactor building is shown in Figure 3A.5.2-1. The model of the supporting soil is the same as that shown in Figure 3A.5.1-1a in connection with the analysis for SRV discharge loads. The soil is represented by solid axisymmetric elements with asymmetric load capability. Spatial variation of soil shear modulus and unit weight and soil-structure interaction are accounted for.

As shown in Figure 3A.5.2-1, two types of finite elements have been used in modeling of the building, namely, axisymmetric conical shell elements and axisymmetric solid elements; both types of elements have asymmetric loading capability. The wetwell columns, stabilizer trusses, bellows, and shear lugs between the diaphragm floor and containment are modeled using springs.

In the suppression pool region, where the hydrodynamic loads are applied and where a more accurate representation is required, the node locations are closely spaced. The horizontal rings attached to the containment vessel are treated as discrete rings and the additional stiffness due to the vertical stiffeners is included with the vessel properties.

The RPV and internals are represented by axisymmetric shell elements. The dynamic coupling effect of the fluid in the RPV is accounted for by adding hydrodynamic masses to the nodal points of the mathematical model.

3A.5.2.2 Method of Analysis and Building Response

The structural response of the reactor building, when subjected to the chugging phenomenon, is determined from the application of the seven distributions of the chugging pressures on the wetwell pool boundary in the analytical model. These seven distributions of pool boundary pressures result from the seven design chugging sources developed for the multivent chugging definition described in Section 3A.3.2.4.2.1. Two loading cases are considered for each of the seven design sources, namely, nearly symmetric and asymmetric conditions. Detailed

analytic methods for determination of the structural response are given in Reference 3A.3.2-15.

As described in Reference 3A.3.2-15, the nearly symmetric and asymmetric results are comparable. For the purpose of this assessment, the nearly symmetric loading condition is used.

The response of the building is obtained in terms of acceleration response spectra. These were calculated for significant locations in the reactor building for the nearly symmetric and asymmetric loading conditions. The envelope spectrum curves were plotted with peaks spread by ±15% for damping values of 0.5%, 1.0%, 2.0%, and 4.0% of critical damping. Nearly symmetric response spectra plots for different locations in the building are illustrated in the figures listed below.

It should be noted that the design values presented in Figures 3A.5.2-2 through 3A.5.2-10 were increased by a factor of 1.10 to account for the differences in vent size (28 in. for Columbia Generating Station as compared to 24 in. for the 4T and 4TCO test) and an additional factor of 1.16 over the values presented in the chugging report.

3A.5.2.2.1 Reactor Building Response, Nearly Symmetric Loading - Acceleration Response Spectra

Location	Direction	Figure
Containment Vessel, el. 448 ft Mass No. 152	Radial	3A.5.2-2
Containment Vessel, el. 448 ft Mass No. 152	Vertical	3A.5.2-3
Containment Vessel, el. 459 ft Mass No. 123	Radial	3A.5.2-4
Containment Vessel, el. 459 ft Mass No. 123	Vertical	3A.5.2-5
RPV Support on Pedestal, el. 519 ft Mass No. 57	Radial	3A.5.2-6
RPV Support on Pedestal, el. 519 ft Mass No. 57	Vertical	3A.5.2-7

Containment Vessel, el. 583 ft Mass No. 12	Radial	3A.5.2-8
Building Wall, el. 521 ft Mass No. 55	Radial	3A.5.2-9
Building Wall, el. 521 ft Mass No. 55	Vertical	3A.5.2-10

Note that the tangential loads were also utilized in the assessment of CGS. The tangential values are not included in this submittal as they are much smaller in magnitude then the presented values.

Attachment 3A.B

THREE-DIMENSIONAL SOURCE FLOWS IN EXACT CONTAINMENT GEOMETRY

3A.B.1 INTRODUCTION AND SUMMARY

The method specified in Reference 3A.B-1 to calculate the flow field due to bubbles [caused by a loss-of-coolant accident (LOCA) or safety/relief valve (SRV) actuation] in a Mark II suppression pool is the method of images (MOI). The MOI is a potential flow technique and uses point source(s) or sink(s) to represent the bubble(s) and a number of image sources and/or sinks to simulate flow at the pool boundaries to satisfy the kinematical boundary conditions. The MOI has the following limitations with regard to its application to CGS:

a. The annular suppression pool geometry needs to be idealized into a rectangular pool using an "equivalent radius" concept,

b. The sloping suppression pool bottom needs to be idealized into a flat bottom, and

c. Computer flow field calculation costs are high.

In view of these limitations, the MOI is not used to calculate the potential flow field due to stationary source(s) in the CGS suppression pool. Instead, a numerical method is used to determine three-dimensional potential flows induced by source(s) in the exact CGS containment geometry.

The principle of the method can be stated rather simply. The three-dimensional potential flow induced by sources in any arbitrary suppression pool geometry is provided by solution of Laplace's equation for the velocity potential, ϕ. This is done by splitting the function ϕ into two components: ϕ_s which is due to all the sources and sinks (representing expanding or contracting bubbles) and is calculated analytically, and $\hat{\phi}$, which is a smooth function that is calculated numerically. The function $\hat{\phi}$ calculated from the original boundary conditions for ϕ with the boundary values of ϕ_s subracted off. Single ϕ_s analytically known elsewhere and $\hat{\phi}$ can be determined from its boundary conditions by iteration, the total value of the velocity potential, ϕ, can be easily determined.

This attachment describes the formulation of the problem, the method of solution, the numerical procedures utilized, and presents and analyzes some results. Section 3A.B.2 discusses the problem formulation and the solution method, Section 3A.B.3 discusses the numerical procedure, Section 3A.B.4 discusses how the flow field is calculated,

Section 3A.B.5 discusses the initial estimate to start the iteration solution for $\hat{\phi}$. Section 3A.B.6 discusses the convergence and accuracy of the method, and Section 3A.B.7 presents and analyzes some results for single and multiple bubble cases.

3A.B.2 PROBLEM FORMULATION AND SOLUTION METHOD

For a potential flow, the fluid velocity components may be expressed in terms of a velocity potential function, as shown below:

$$V_x = -\frac{\partial \phi}{\partial x}, \qquad V_y = -\frac{\partial \phi}{\partial y}, \qquad V_z = -\frac{\partial \phi}{\partial z}$$

The negative sign is purely a convention and means that the fluid flows in the direction of potential drop (Reference 3A.B-2).

The formulation of the boundary value problem for the potential is:

$\nabla^2 \phi = 0$	everywhere in the fluid except appropriate delta functions at sources and sinks,
$\frac{\partial 0}{\partial n} = 0$	on the rigid boundaries (containment wall, basemat, and pedestal), and
$\phi = 0$	on the free surface (follows from pressure = 0).

The velocity potential, ϕ is split into two parts:

$$\phi = \phi_s + \hat{\phi}$$

The function ϕ_s represents contributions from the singularities (sources and/or sinks) and its analytical expression at any point within the fluid is given below:

$$\phi_S = \sum_{\nu} \phi_S$$

$$o_S = \frac{Q_\nu}{4\pi_{\rho\nu}}$$

where Q_ν represents the source strength of the νth source or sink and ρ_ν represents the distance from the νth source or sink to the point in question (Reference 3A.B-1).

The function $\hat{\phi}$ is a smooth function and satisfies the boundary value problem:

$$\nabla^2\hat{\phi} = 0 \qquad \text{everywhere,}$$

$$\frac{\partial\phi}{\partial n} = -\frac{\partial\phi_s}{\partial n} \qquad \text{on the rigid boundaries and any planes of symmetry, and}$$

$$\hat{\phi} = -\phi_s \qquad \text{on the free surface.}$$

The boundary values for $\hat{\phi}$ were derived by subtracting the boundary values of ϕ_s from the original boundary value conditions far the total velocity potential, ϕ. Because $\hat{\phi}$ is extremely smooth, it can be accurately calculated by finite differences.

3A.B.3 NUMERICAL PROCEDURE

The geometry of the Columbia Generating Station suppression pool and the location of quenchers and downcomers are shown in *Figures 3A.2.1-1 through 3A.2.1-8*, inclusive. A cylindrical grid of points is overlayed such that all boundaries with $\partial\phi / \partial n = 0$ (i.e., walls and symmetry planes) are all centered between planes of grid points, while the water surface $z = z_{max}$ is a plane of grid points. Figures 3A.B-1 and 3A.B-2 show how the suppression pool geometry has been modeled for a single SRV actuation case and a LOCA bubble case to take advantage of symmetry.

The lengths between grid points in the r, ϕ, and z direction are denoted by Δr, $\Delta\phi$, and Δz and are indexed in the three directions by i, j, and k, respectively.

$$r_i = r_{min} = (i - 1.5)\,\Delta r$$

$$\phi_j = (j - 1.5)\,\Delta\phi$$

$$z_k = (z - 1.5)\,\Delta z$$

Any function, f, when regarded as a function defined on the grid points will be denoted as $f(r_i, \phi_j, z_k) = f_{i,j,k}$. The coordinates of the source(s) are indicated by the subscript s_v.

As mentioned before, the potential ϕ is split into $\phi_s + \hat{\phi}$. ϕ_s is the source potential (or the sum of each source's contribution in the multi-bubble cases):

$$\phi_s = \sum_v \frac{Q_v}{4\pi\rho_v}$$

where

$$\rho_v = ((r\cos\theta - r_v)^2 + (r\sin\theta)^2 = (z-z))\ 1/2$$

ϕ_s is evaluated exactly on all grid points. The numerical procedure of calculating ϕ is by the standard cover-relaxation method, which is summarized succinctly here. $\hat{\phi}$ satisfied the Laplace equation which, in cylindrical coordinates, is (Reference 3A.B-2):

$$\nabla^2 0 = \frac{1}{r}\frac{\partial}{\partial r}\frac{(r\partial 0)}{\partial r} + \frac{1}{r^2}\frac{\partial^2 0}{\partial \theta^2} + \frac{\partial^2 \hat{\phi}}{\partial z^2} = 0 \qquad \text{(3A.B-1)}$$

The finite difference approximation of equation 3A.B-1 is chosen as (∇_f^2 = finite aprrox. of $\nabla^2 2$):

$$\nabla_f^2 \hat{\phi} = \frac{(r_{i+1} + r_i)(\hat{\phi}_{i+1,j,k} - \hat{\phi}_{i,j,k}) - (r_i - r_{i-1})(\hat{\phi}_{i,j,k} - \hat{\phi}_{i-1,j,k})}{2r_i(\Delta r)^2} +$$

$$\frac{\hat{\phi}_{i,j+1,k} + \hat{\phi}_{i,j-1,k} - 2\hat{\phi}_{i,j,k}}{r_i^2(\Delta\theta)^2} + \frac{\hat{\phi}_{i,j,k+1} + \hat{\phi}_{i,j,k-1} - 2\hat{\phi}_{i,j,k}}{(\Delta z)^2} = 0 \qquad \text{(3A.B-2)}$$

where:

$i=2,3\ldots i_{max}-1$, $j=2,3\ldots j_{max}-1$, $k=2,3\ldots k_{max}-1$

Equation 3A.B-2 constitutes a linear system of (i_{max}-2) x (j_{max}-2) x (k_{max}-2) equations. The number of unknowns is larger, since they are unknowns at the boundaries, which are to be related by the boundary conditions.

As stated before, the boundary conditions for ϕ are:

$\hat{\phi} = -\phi_s$ on the water surface and $\frac{\partial\hat{\phi}}{\partial n} = -\frac{\partial\phi_s}{\partial n}$ on walls, bottom, and planes of symmetry.

For planes of symmetry a simplification from $\partial\hat{\phi} / \partial n = -\partial\phi_s / \partial n$ to $\partial\hat{\phi} / \partial n = 0$ occurs.

The finite difference equations have corresponding boundary conditions for flat bottom containments:

$$\hat{\phi}_{i,j,k_{max}} = -\phi_{s\,i,j,k_{max}} \qquad \text{(on the free surface)},$$

$$\hat{\phi}_{i,j,1} - \hat{\phi}_{i,j,2} = -\phi_{s\,i,j,1} + \phi_{s\,i,j,2} \qquad \text{(on basement floor)},$$

$$\hat{\phi}_{1,j,k} - \hat{\phi}_{2,j,k} = -\phi_{s\,1,j,k} + \phi_{s\,2,j,k} \qquad \text{(on the pedestal wall)},$$

$$\phi_{i_{max},j,k} - \phi_{i_{max}-1,j,k} = -\phi_{i_{max},j,k} + \phi_{i_{max}-1,j,k} \qquad \text{(on the containment wall)},$$

$$\hat{\phi}_{i,1,k} = \hat{\phi}_{i,2,k} \qquad \text{(on the surface } \theta = 0^{o}\text{), and}$$

$$\hat{\phi}_{i,j_{max},k} - \hat{\phi}_{i,j_{max}-1,k} = -\phi_{s\,i,j_{max},k} + \phi_{s\,i,j_{max}-1,k} \qquad \text{(on the surface } \theta = \theta_{max}\text{)}.$$

These equations, coupled with equation 3A.B-2, now provide a complete system of i_{max}, k_{max} equations for the same number of unknowns.

There are many techniques available to solve the finite-difference equations generated from the Laplace equation. Some, using fast Fourier transform techniques or direct elimination techniques, are indeed very fast. The successive over-relaxation procedure (SOR) was selected because it is adequate in speed; in addition, it can handle general boundaries, whereas, use of other (possibly faster) methods require rectangular domains, periodic boundary conditions, or other restrictions.

Equation 3A.B-2 is solved for the center point in terms of the values at the neighboring points by iterating: (Superscript (n) indicates the nth iteration, (n+1) the next iteration, etc.)

$$\hat{\phi}_{i,j,k}^{(n+1)} = \frac{\hat{\phi}_{i,j+1,k} + \hat{\phi}_{i,j-1,k}}{r_i^{\,2}(\Delta\theta)^2} + \frac{\overleftarrow{\phi}_{i,j,k+1} = \hat{\phi}_{i,j,k-1}}{(\Delta z)^2} + \frac{(r_{i+1} + r_i)}{2r_i(r)^2}\hat{\phi}_{i+1,j,k} +$$

$$\frac{(r_{i-1} + r_i)}{2r_i(\Delta\theta)^2}\hat{\phi}_{i-1,j,k} - \frac{2}{2r_i(\Delta\theta)^2} + \frac{2}{(\Delta z)^2} + \frac{2}{(\Delta r)^2}$$

or $\hat{\phi}^{(n+1)} = V_o\hat{\phi}^{(n)}$

where:

V_o denotes an “averaging” operator.

Whenever a point is updated, the new value is to be used in calculating its neighboring points $\left(\hat{\phi}^{(n+1)} = V_1\hat{\phi}^{(n)} + V_2\hat{\phi}^{(n+1)}\right)$. This is straightforward iteration or relaxation. In SOR, which is much faster, the change is anticipated by using an acceleration parameter, (Reference 3A.B-3):

$$\hat{\phi}^{(n+1)} = \hat{\phi}^{(n)} + \omega\left(V_{0\phi^{(n)}-\phi^{(n)}}\right) \qquad \text{(3A.B-3)}$$

Numerical analysis theory shows that convergence occurs for $0 < \omega < 2$, but the optimal depends on the geometry. Various test runs for the single SRV bubble, and for the three bubble LOCA geometries were run with $\omega = 1.98$ chosen for rapid convergence (Section 3A.B.6 gives more details on convergence).

(Note: for $\omega = 1$, equation 3A.B-3 becomes $\hat{\phi}^{(n+1)} = V_0\hat{\phi}^{(n)}$ which is the straightforward iteration case).

3A.B.4 CALCULATION OF FLOW FIELD

3A.B.4.1 Steady State Flow Field Calculation

The calculation of the velocity due to a potential function is performed by taking the negative gradient of the total potential, ϕ. As discussed earlier, the total potential is determined by summing ϕ_s, the potential due to the singularities plus $\hat{\phi}$, which is a smooth function. To ensure accuracy near singularities the velocity field is also calculated as the sum of two components:

$$V = -\nabla\phi = -\nabla\left(\phi_s + \hat{\phi}\right) = V_s + \hat{V}$$

The velocity field due to the smooth function $\hat{\phi}$ is determined numerically at points one-half a grid distance away from the velocity potential grid system as shown in Figure 3A.B-3a. Essentially this scheme averages values of $\hat{\phi}$ in the two neighboring grid planes that are normal to the direction of the desired velocity component. Once these two averages are established, the velocity component is determined by subtracting the two values and dividing by the grid width (Δr, $r\Delta\theta$, Δz) in the appropriate direction (a representative example is given in Figure 3A.B-3). The r, θ, and z velocity components due to $\hat{\phi}$ are shown below:

$$V_{r\,i,j,k} = \left(\hat{\phi}_{i,j,k} + \hat{\phi}_{i,j+1,k} + \hat{\phi}_{i,j,k+1} + \hat{\phi}_{i,j+1,k+1}\right) - \left(\hat{\phi}_{i+1,j,k} + \hat{\phi}_{i+1,j+1,k} + \hat{\phi}_{i+1,j,k+1} + \hat{\phi}_{i+1,j+1,k+1}\right) / (4 \cdot \Delta r)$$

$$V_{0\,i,j,k} = \left(\hat{\phi}_{i,j,k} + \hat{\phi}_{i+1,j,k} + \hat{\phi}_{i,j,k+1} + \hat{\phi}_{i+1,j,k+1}\right) - \left(\hat{\phi}_{i,j+1,k} + \hat{\phi}_{i+1,j+1,k} + \hat{\phi}_{i,j+1,k+1} + \hat{\phi}_{i+1,j+1,k+1}\right) / (4 \cdot r \cdot \Delta 0)$$

$$V_{z\,i,j,k} = \left(\hat{\phi}_{i,j,k} + \hat{\phi}_{i+1,j,k} + \hat{\phi}_{i,j+1,k} + \hat{\phi}_{i+1,j+1,k}\right) - \left(\hat{\phi}_{i,j,k+1} + \hat{\phi}_{i+1,j,k+1} + \hat{\phi}_{i,j+1,k+1} + \hat{\phi}_{i+1,j+1,k+1}\right) / (4 \cdot \Delta z)$$

The velocity field due to a source is determined analytically at the same grid points used for the velocity field due to the smooth function. The magnitude of the total velocity at a point due to a source is defined as:

$$|V_s| = \frac{Q}{4\pi\rho^2}$$

The x, y, z velocity components are defined by:

$$Vx_s = |V_s| \cdot \frac{x - x_s}{\rho}$$

$$Vy_s = |V_s| \cdot \frac{y - y_s}{\rho}$$

$$Vz_s = |V_s| \cdot \frac{z - z_s}{\rho}$$

and the cylindrical components are defined by:

$$Vr_s = Vx_s \cos\theta + Vy_s \sin\theta$$
$$V\theta_s = Vy_s \cos\theta - Vs_s \sin\theta$$
$$Vz_s = Vz_s$$

For multiple sources, the velocity component are determined by summing the contribution of each of the sources. The total velocity magnitude is determined by the square root of the sum of the squared of the three components.

The usual way of calculating the velocity field is by differentiating the total potential function ϕ by the use of finite differences in exactly the same manner as was describe for the smooth function's velocity calculation. The defect here is that the resultant velocity field becomes inaccurate as one approaches the source(s). This is due to the singularity in ϕ and the resultant inability of a finite difference scheme to approximate a derivative. Also, finite differences taken across the source(s) will be totally inaccurate and meaningless. The above method of calculating the velocity field avoids this problem because (1) the velocities due to

ϕ_s are an exact solution and, (2) $\hat{\phi}$ is a smooth function which allows for a good approximation of a derivative by finite differences.

3A.B.4.2 Transient Flow Field Calculation

The flow field due to a time varying source can be calculated by assuming that the source strength varies with time. Since the velocity field is now a function of time and space, an acceleration field can also be calculated:

$$V(r, \theta, z, t) = -Q(t)\nabla\phi(r, \theta, z)$$
$$V(r, \theta, z, t) = -Q(t)\nabla\phi(r, \theta, z)$$

where:

$Q(t)$ is the equivalent time varying point source strength representing the hydrodynamic source.

$\dot{Q}(t)$ is the time rate of change of Q(t).

$\nabla\phi(4, \theta, z)$ = gradient of the velocity potential at a given point due to a normalized point source strength.

$V(r, \theta, z, t)$ = total velocity at a given point.

$\dot{V}(r, \theta, z, t)$ = total acceleration at a given point.

3A.B.5 INITIAL ESTIMATE FOR ITERATION

Since $\partial\hat{\phi}/\partial n$ connects two grid planes which make up a rigid boundary, it is a "soft" boundary condition and "clamps" down the solution less than does a $\hat{\phi}$ boundary condition. With $\hat{\phi}$ known at only one out-of-six possible boundaries, it is necessary to start the iterations with as good an estimate as possible for the initial function $\hat{\phi}^{(0)}$. For single source cases, the initial function $\hat{\phi}^{(0)}$ is easy to construct: simply take $\hat{\phi} - \phi_s$ on the surface, and $\hat{\phi} = 0$ on the basemat, and interpolate linearly in z along each vertical line. Subsequent convergence for $\hat{\phi}$ is not too far from zero on all the boundaries.

For the multi-bubble LOCA cases, the situation is quite different. Above the sources the flow is essentially a vertical slug with uniform velocity up to the surface, while below the sources the flow is very small. Thus ϕ rises from zero on the surface to some large value near the

bubbles. From this knowledge of the phenomenon the following construction for the initial function was developed:

(1) Calculate the average surface velocity:

$$V_{surf} = \Sigma Q/\text{area of surface}$$

(2) The total ϕ behaves like:

$$\phi \cong V_{surf}(z_{surf} - z) \qquad \text{far above the sources}$$
$$\phi \cong \phi \text{ sources} \qquad \text{near the source}$$
$$\phi \cong V_{surf}(z_{surf} - z_s) \qquad \text{far below the source}$$

(3) From (2) above use:

$$\hat{\phi} = V_{surf}(z_{surf} - z) - \phi_s \qquad \text{above the source}$$
$$\hat{\phi} = V_{surf}(z_{surf} - z_s) - \phi_{s'}, \qquad |z - z_s| < 12"$$
$$\hat{\phi} = V_{surf}(z_{surf} - z_s), \qquad |z - z_s| < -12"$$

The prescription is designed to obtain the correct $\hat{\phi}$ away from the sources quickly, and not to introduce any singular parts into $\hat{\phi}$ near the sources. Naturally, such estimates are arbitrary, but absolute accuracy of the initial estimates are not required anyway.

3A.B.6 CONVERGENCE AND ACCURACY

This section is concerned with the accuracy of the finite difference solution. A good numerical solution is one that accurately approximates the exact solution. The approach of the numerical solution to the exact solution as the grid is refined is called convergence of the numerical solution. If an iterative scheme is used, as in our case, convergence of the iterations is defined by the difference between any two iterations approaching zero as the number of iterations is increased.

For this scheme, theory assures us that both kinds of convergence take place (Reference 3A.B-3) provided $0 < \omega < 2$ (see Section 3A.B.3) and provided small enough grids and large enough number of iterations are used. The real questions, of course, are whether small enough grids and enough iterations have been used to guarantee an accurate enough approximate solution.

To check convergence of the numerical solution LOCA bubble charging, SRV, etc. were recalculated with several different grid sizes until the change in the solution was insignificant. Figure 3A.B-4 shows the results of several different grids. Figure 3A.B-1 shows the geometry for a single SRV case.

Convergence of iterations is easier to check by printing the total percent change between two successive iterations, and ascertaining that this change is not more than 0.001% (for single bubble, 300 iterations, for LOCA, 2000 iterations). Note that this suggests accuracy, but does not guarantee it, for even such small changes can be accumulated over a large number of steps and can cause divergence of the solution.

(For example: $\sum \frac{M}{n} \frac{1}{n}$ diverges as M approaches infinity but the percent change between successive terms $n=1$ approaches zero.)

There are additional checks made, namely, overall conservation. To do this, the flow $\iint (\partial\phi/\partial n) ds$ over all the surface areas due to the singular part of the potential, ϕ_s and the smooth part of the potential, $\hat{\phi}$ are calculated. On the solid walls, they are equal and opposite and add up to zero (this is exactly so on vertical walls and on the flat bottom, but only closely so on the slant bottom). On the free surface, the sum of the two should equal exactly the total of all the sources. For the number of iterations performed the solutions are always within 0.1%.

In addition, the integral $\iiint \overline{\nabla}^2 \phi dV$ is calculated. For the smooth part, this should equal zero, while for the singular part, this should equal the total flow of N sources, $(N \cdot 4\pi)$. The first is accurate always to within 0.1 in.^{3}/sec, the latter agrees with the sum of the free surface flows to within 0.1%. This however, is not coincidental, since the finite difference approximation of the Laplacian operator has been chosen to be "conservative", i.e., the Gauss theorem holds for the difference approximation.

Finally, the integral, $\iiint_3 \left|\overline{\nabla}^2 \phi\right| dV$, is also calculated and vanished to within 0.1 in.^{3}/sec for the smooth part. This same integral is calculated for the singular part and should also equal the total source flows which in fact it does not. This is unimportant, since the singular part is never calculated by finite difference except at the boundary, and the finite difference Laplacian is not expected to be accurate for the singular functions.

3A.B.7 RESULTS

In this section, some computed results for two representative cases are presented and analyzed: (a) slanted bottom pool, LOCA bubble charging event and, (b) flat bottom pool, LOCA bubble charging event.

In all the velocity results presented, the source strengths have been normalized to:

$$Q/4\pi = 10{,}000 \text{ in.}^3/\text{sec}$$

i.e., the flow velocity is 100 in./sec at a radius of 10 in. from the source center, or the total flow is $4\pi \times 10^4$ in.^{3}/sec. However, to keep the potentials in a more manageable range, the printed values are 1/10 of the potentials corresponding to the above normalized source strength (i.e., the reader should multiply all printed potentials by 10 to get the correct value).

3A.B.7.1 Loss-of-Coolant Accident Bubble Charging

Loss-of-coolant accident bubble charging calculations were made under the assumption that all bubbles are of the same strength ($Q/4\pi = 10{,}000$). Then by symmetry, it suffices to perform the calculation for a wedge of angle $2\pi/34 = 10.6^\circ$ radius (since there are three rows of 34 downcomers). By further symmetry, it suffices to consider just a half-wedge, or 5.29°, since the plane exactly halfway between two downcomer planes is a symmetry plane. Figure 3A.B-2 gives the geometry of the LOCA bubble charging calculations. The flat bottom calculations used 16 points in r, 26 points in z, and 10 points in θ; corresponding to grid sizes of $\Delta r = 23.75$ in., $\Delta\theta = 0.01155$ rad, and $\Delta z = 15.26$ in. Figure 3A.B-5 shows the potential distribution at a plane near the sources and Figure 3A.B-6 shows the same at the plane midway between two source planes. Figures 3A.B-7 and 3A.B-8 show the velocity in the planes $\theta = 0^\circ$ and $\theta = 5.29^\circ$, respectively.

There are some physically interesting features revealed in these calculations. (a) In contrast to one or a few single bubbles, when LOCA bubbles grow in phase, flow below the source is essentially negligible. (b) There is very little variation in the flow pattern in the azimuthal (θ) direction, except of course, at the exact elevation of the sources. (c) Although the sources have the same strength, the innermost source has a stronger influence on the flow than does the outermost one, simply because of the increased density of the bubbles as one approaches the pedestal. (d) From calculations for three-dimensional LOCA flow for the flat bottom case (Figure 3A.B-9) the smallness of the velocities (or essentially constant ϕ values) below the source levels, indicates that the effect of the slant bottom is negligible.

3A.B.8 REFERENCES

3A.B-1 Analytical Model for Estimating Drag Forces on Rigid Submerged Structures Caused by LOCA and SRV Ramshead Air Discharges, General Electric Company, NEDE-21471 (Proprietary), September 1977.

3A.B-2 Theoretical Hydrodynamics, by L. M. Milne-Thompson, the Macmillan Company, N.Y., 1950.

3A.B-3 Analysis of Numerical Methods, by E. Isaacson and H. B. Keller, John Wiley & Sons, Inc., N.Y., 1966.

A) Plan View of Suppression Pool Showing Single SRV Symmetry About θ = 0° to 180°

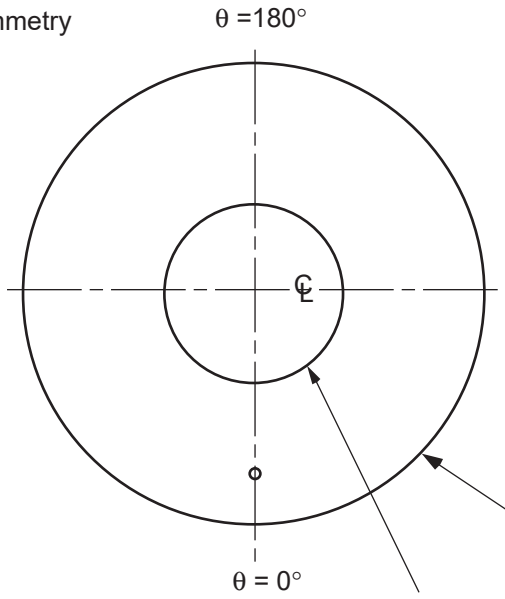

B) Conceptualization Showing Geometry that was Modeled

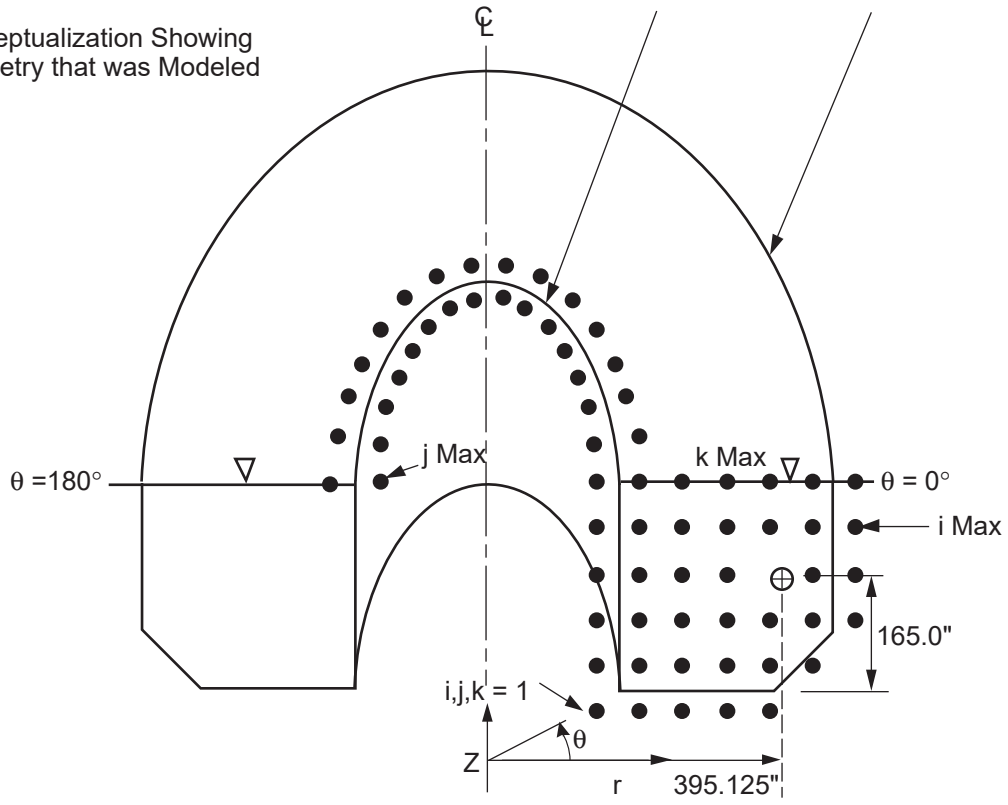

Notes:

1) ○ Indicates Downcomer Location

2) ⊕ Indicates Source/Bubble Location

3) ℄ Indicates Suppression Pool Centerline

4) ● Indicates Velocity Potential Grid Points

Columbia Generating Station
Final Safety Analysis Report

Geometry for Single SRV Case

Draw. No. 900547.82	Rev.	Figure 3A.B-1

A) Plan View of Suppression Pool Showing Downcomer Symmetry About θ = 0°

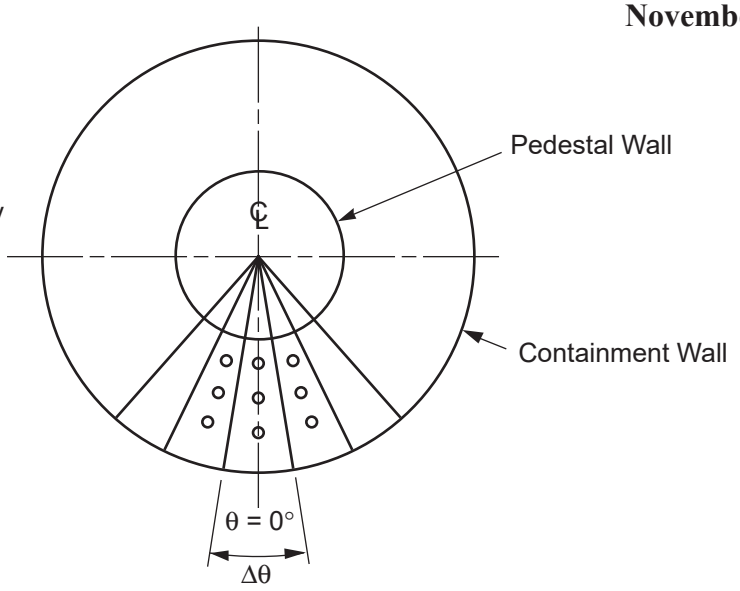

B) Conceptualization Showing Geometry that was Modeled

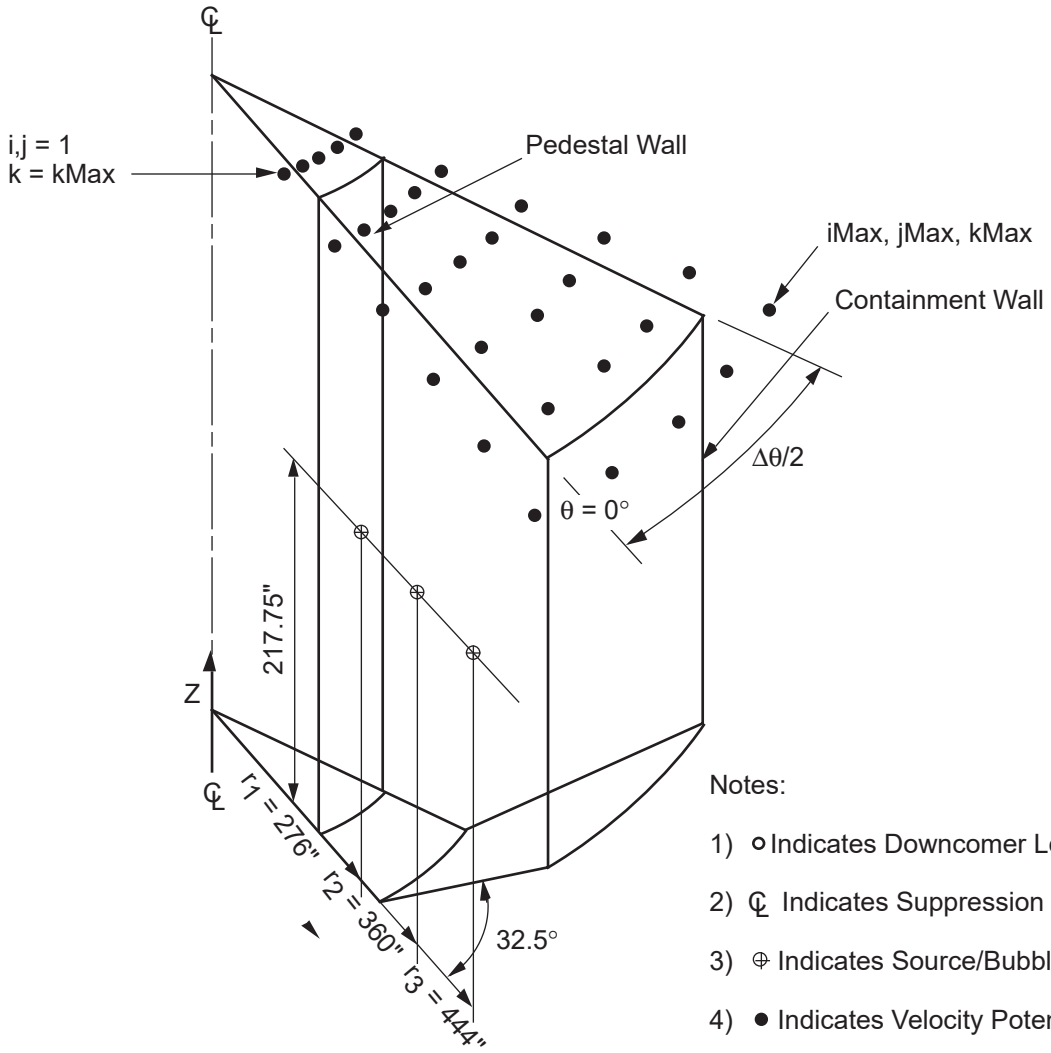

Notes:

1) ○ Indicates Downcomer Location
2) ℄ Indicates Suppression Pool Center Line
3) ⊕ Indicates Source/Bubble Location
4) ● Indicates Velocity Potential Grid Points

Columbia Generating Station
Final Safety Analysis Report

Geometry for LOCA Bubble Charging Case

Draw. No. 900547.81	Rev.	Figure 3A.B-2

A) Relationship of Velocity Potential Grid Versus Velocity Grid

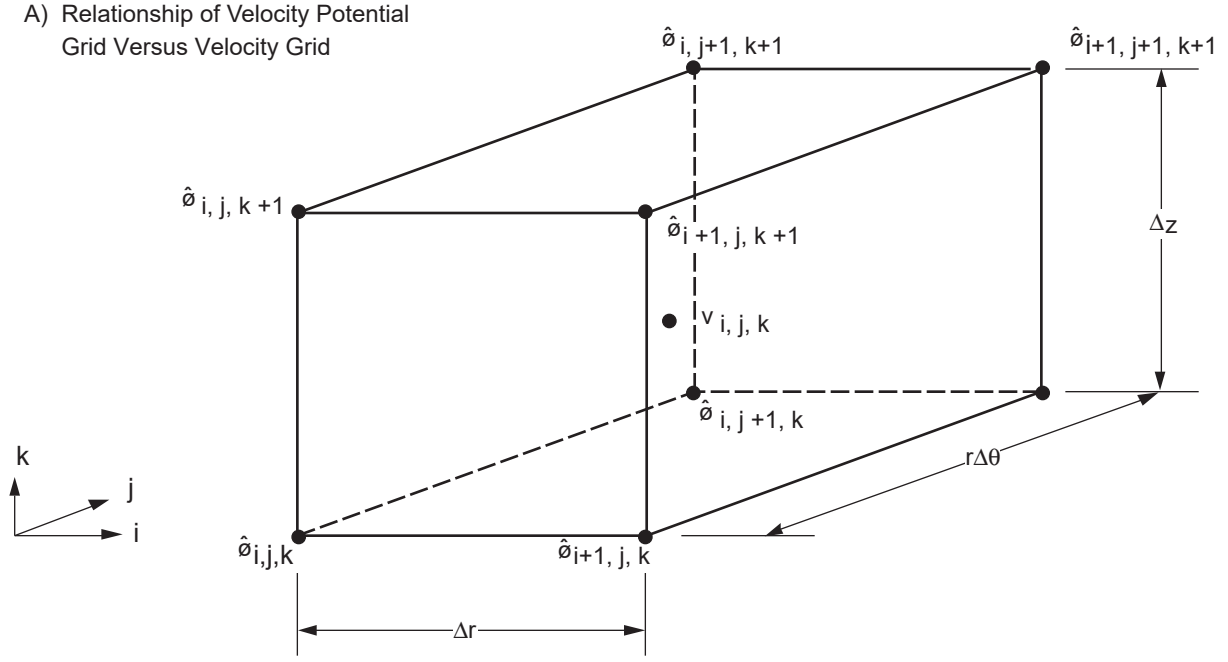

B) Conceptualization of How vθ̂ Is Calculated.

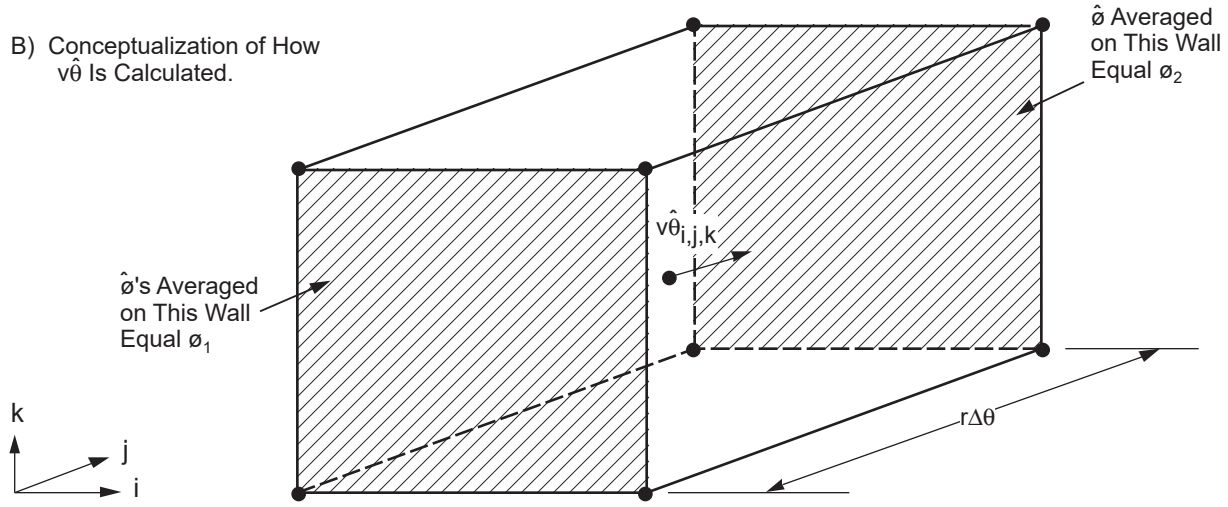

$$ø_1 = (\hat{ø}_{i,\,j,\,k} + \hat{ø}_{i+1,\,j,\,k} + \hat{ø}_{i+1,\,j,\,k+1} + \hat{ø}_{i,\,j,\,k+1})/4$$

$$ø_2 = (\hat{ø}_{i,\,j+1,\,k} + \hat{ø}_{i,\,j+1,\,k+1} + \hat{ø}_{i+1,\,j+1,\,k+1} + \hat{ø}_{i+1,\,j+1,\,k})/4$$

$$v\hat{\theta} = \frac{\hat{ø}_1 - \hat{ø}_2}{r\Delta\theta}$$

Columbia Generating Station
Final Safety Analysis Report

Velocity Grid

Draw. No. **900547.83** | Rev. | Figure **3A.B-3**

Form No. 960690

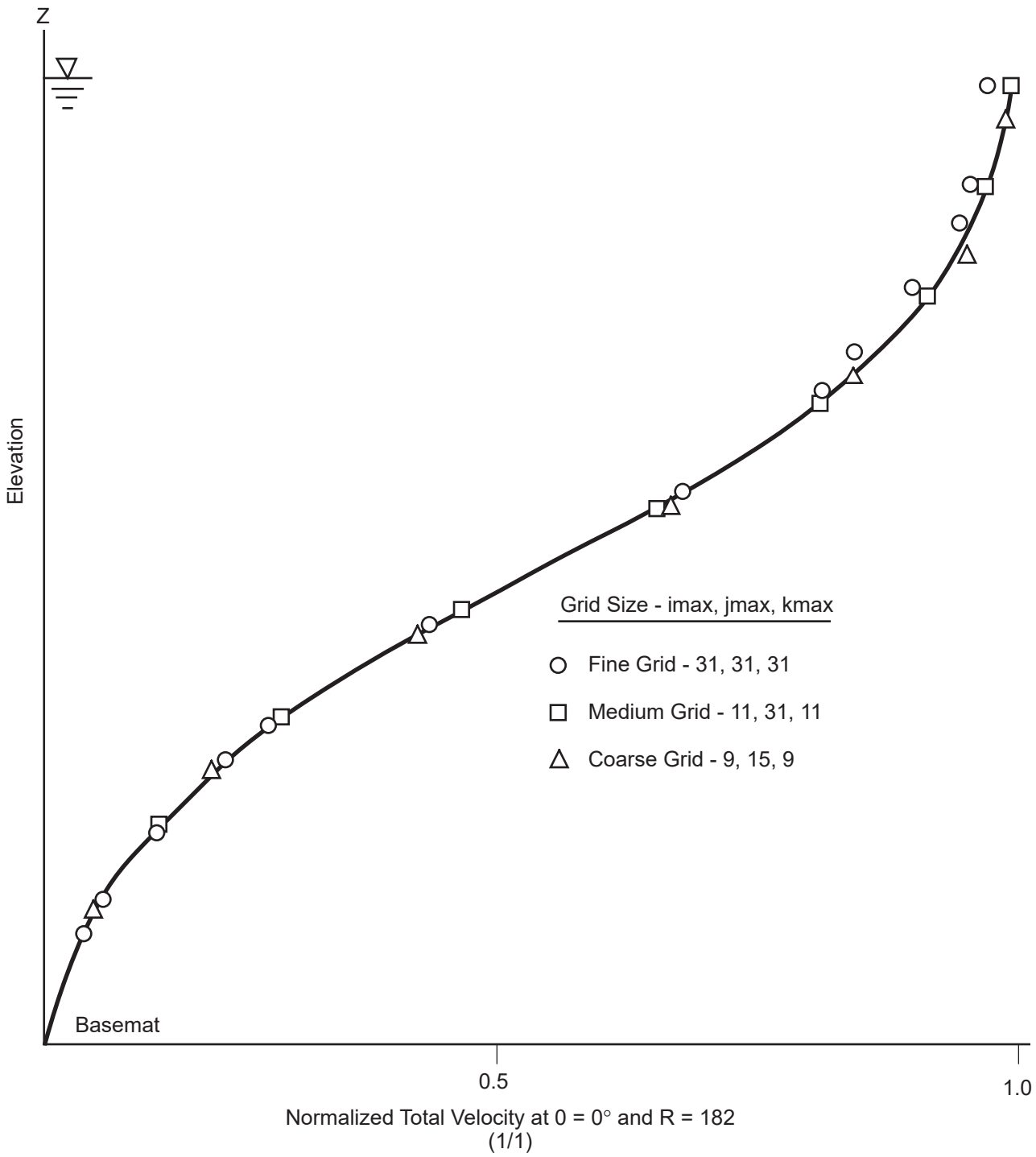

Columbia Generating Station
Final Safety Analysis Report

Grid Convergence Test

Draw. No. 900547.80	Rev.	Figure 3A.B-4

Φ Units: in²/sec for a Point Source of Strength 10^{+3} in³/sec

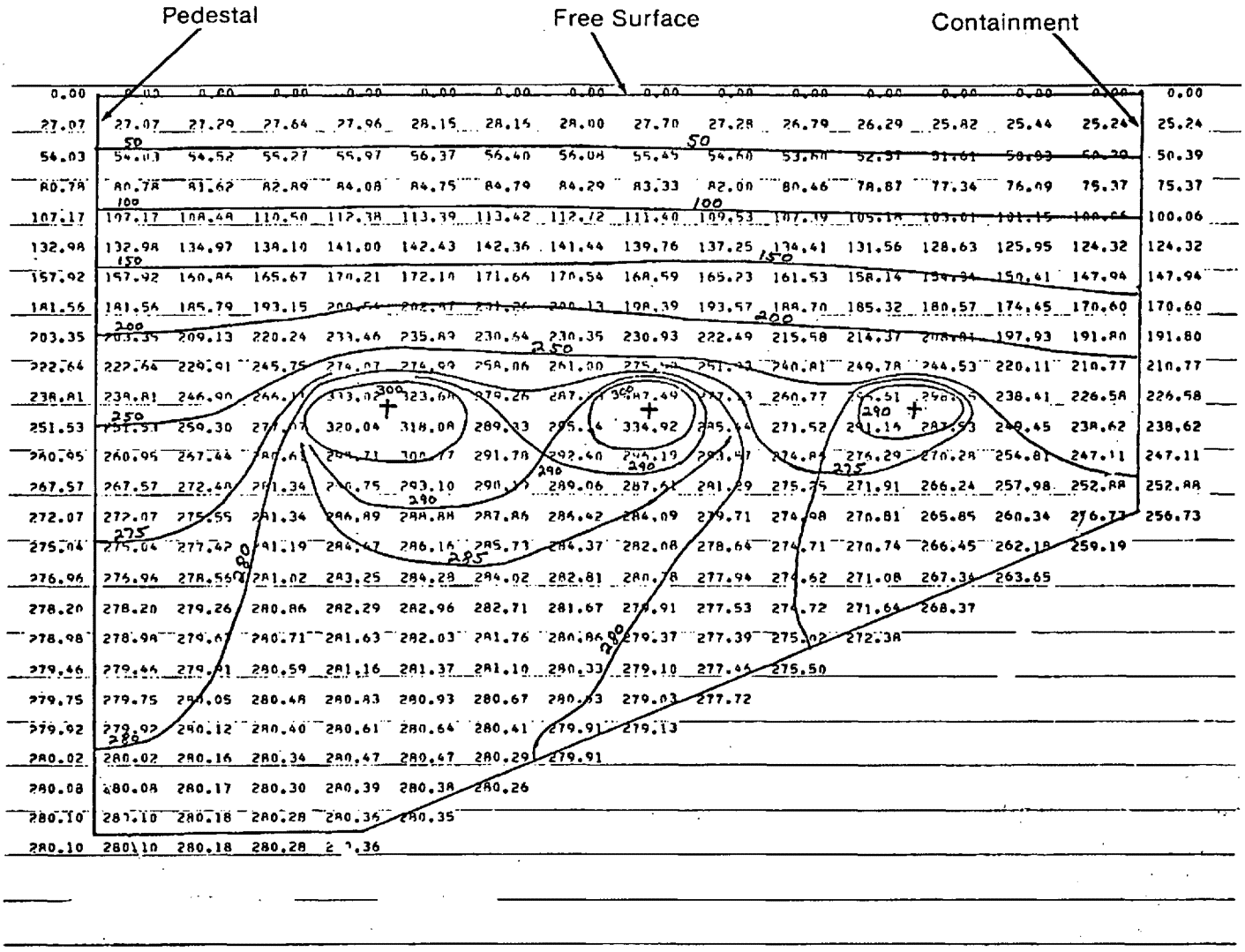

Notes:
1. + indicates radial and vertical locations of the sources.
2. See Figure 3A.B-2 for geometry.

Columbia Generating Station **Final Safety Analysis Report**	**Velocity Potential, Φ, in Plane 0.33° Away from Sources for LOCA Bubble Slant Bottom Case**		
	Draw. No. 020361.23	Rev.	Figure 3A.B-5

Φ Units: in^2/sec for a Point Source of Strength $10^{+3} in^3/sec$

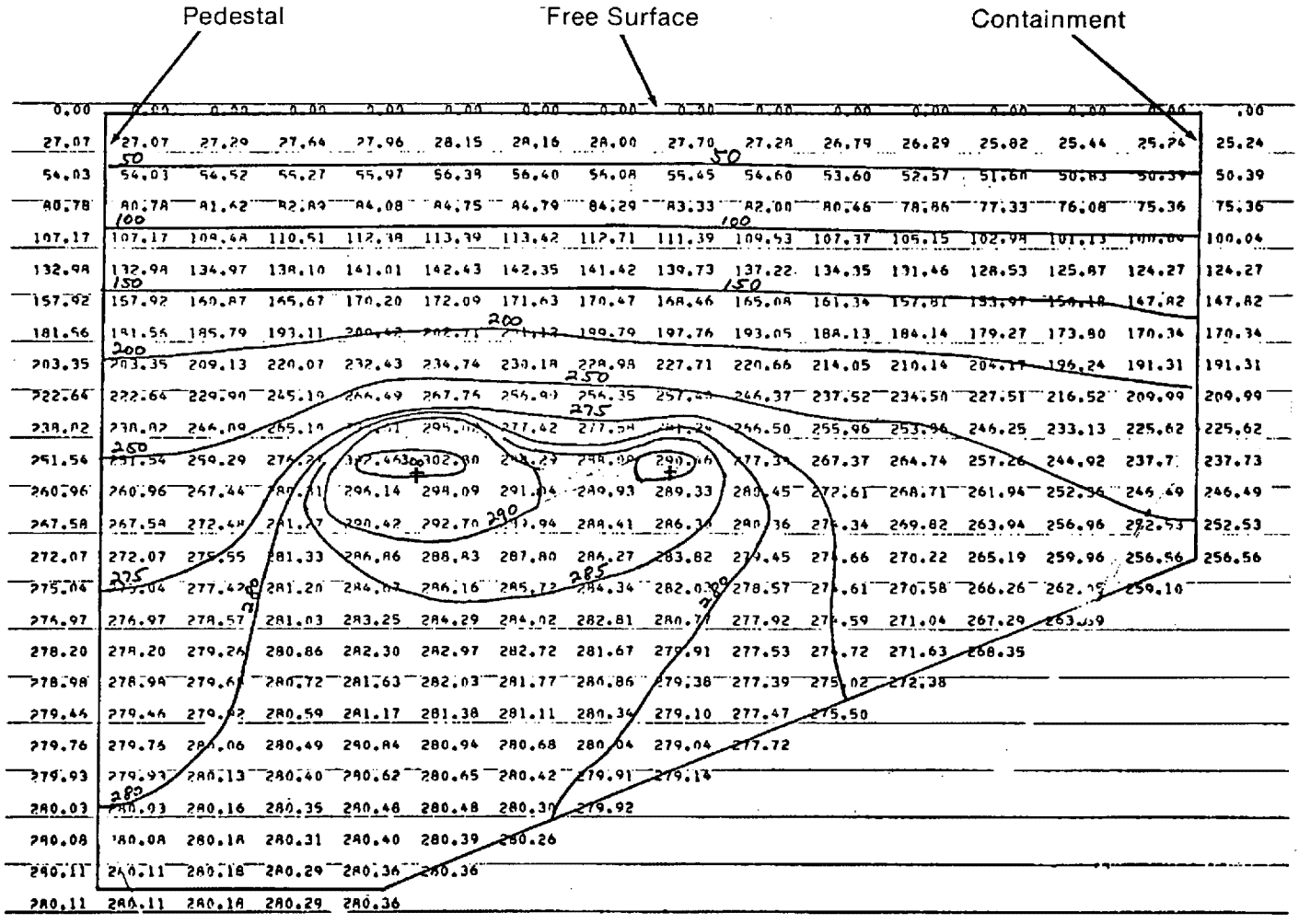

Notes:
1. + indicates radial and vertical locations of the sources.
2. See Figure 3A.B-2 for geometry.

Columbia Generating Station Final Safety Analysis Report	Velocity Potential, Φ, in Plane 4.96° Away from Sources for LOCA Bubble Slant Bottom Case		
	Draw. No. 020361.24	Rev.	Figure 3A.B-6

$\nabla\Phi$ Units: in/sec for a Point Source of Strength 10^{+4} in^3/sec

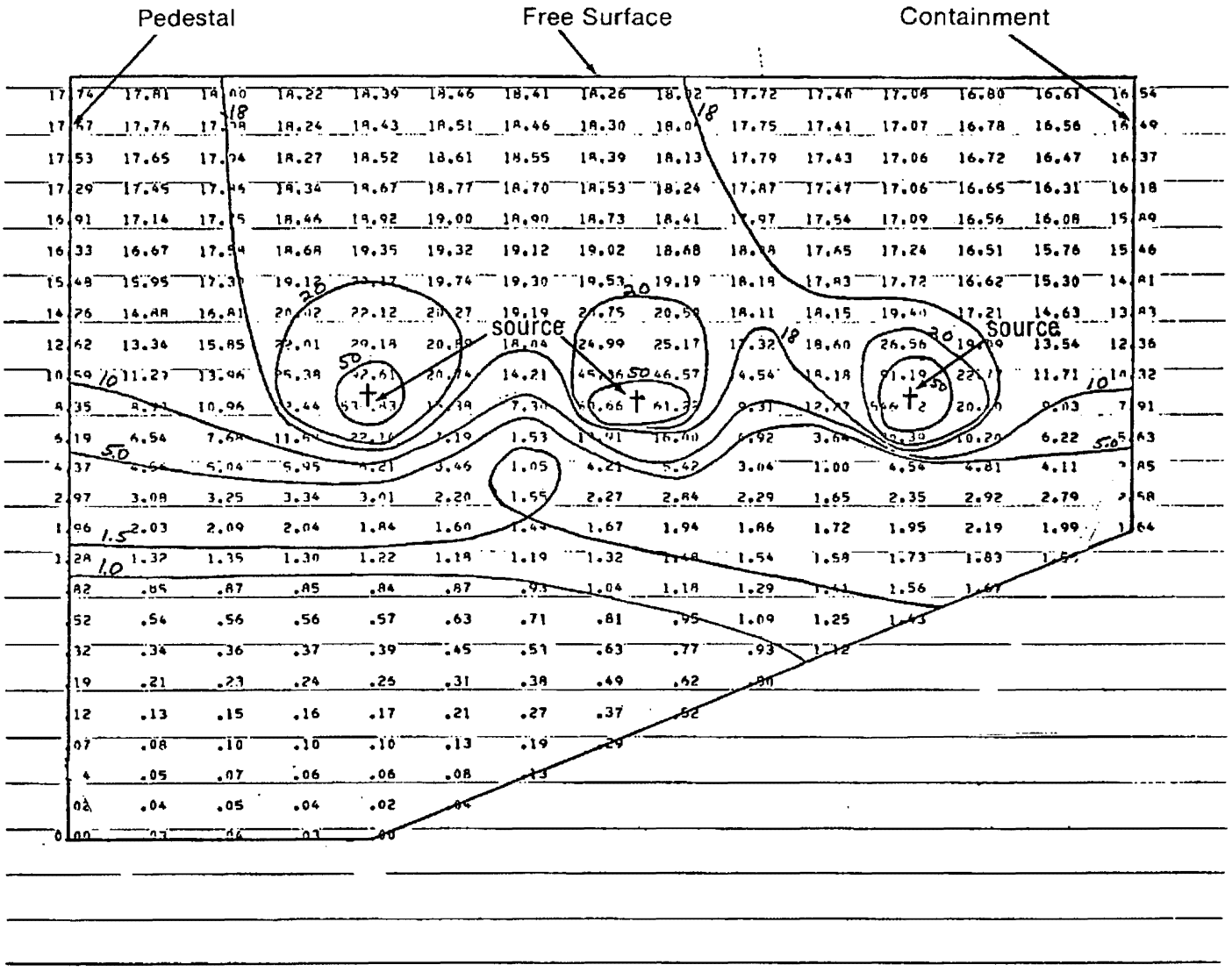

Note:
1. Figure 3A.B-2 shows geometry.

Columbia Generating Station **Final Safety Analysis Report**	**Total Velocity Gradient, $\nabla\Phi$, in Source Plane for LOCA Bubble Slant Bottom Case**		
	Draw. No. 020361.25	Rev.	Figure 3A.B-7

$\nabla\Phi$ Units: in/sec for a Point Source of Strength 10^{+4} in^3/sec

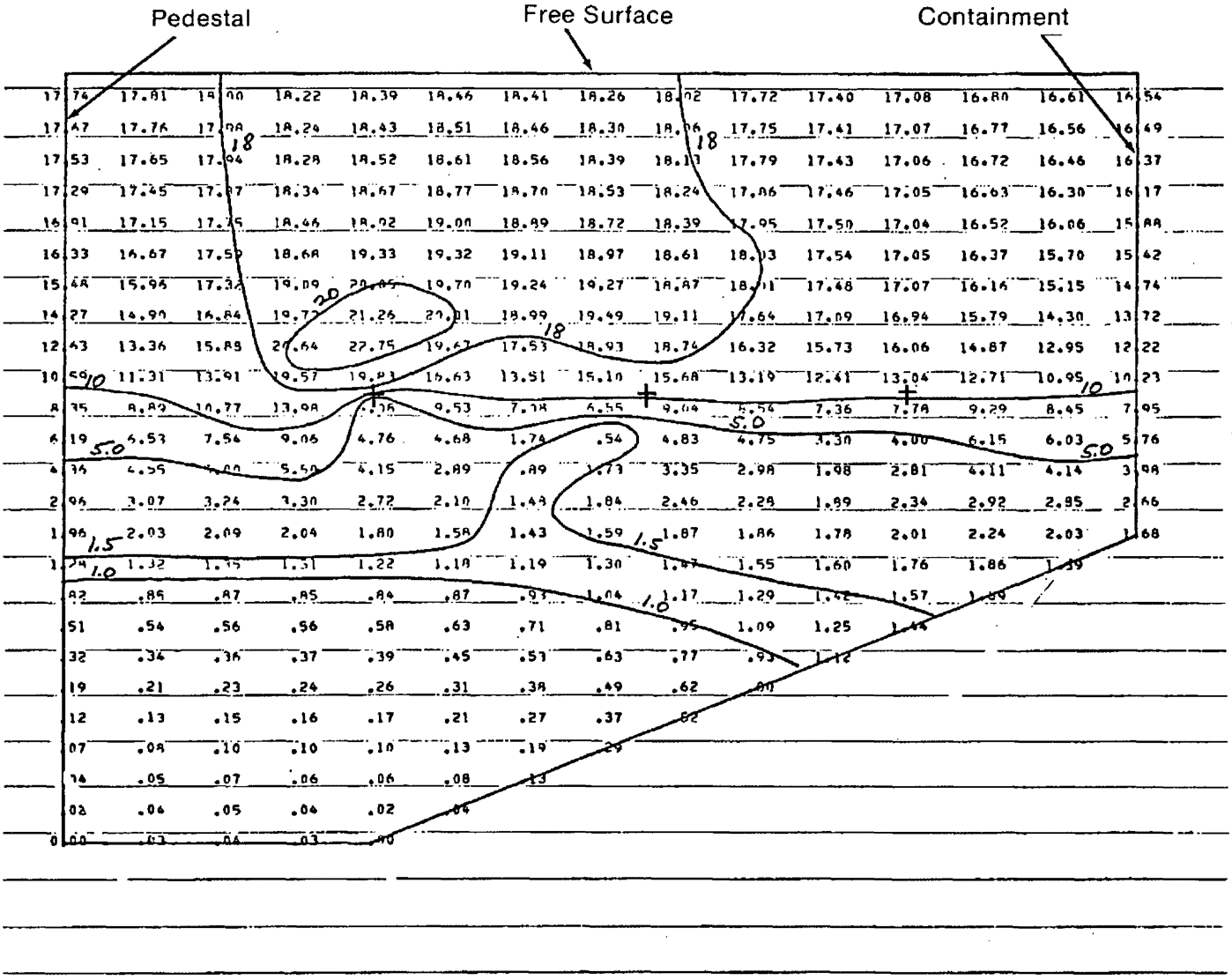

Note:
1. † indicates radial and vertical locations of the sources.

Columbia Generating Station Final Safety Analysis Report	**Total Velocity Gradient, $\nabla\Phi$, in Source Plane 5.29° Away from Sources for LOCA Bubble Slant Bottom Case**		
	Draw. No. 020361.26	Rev.	Figure 3A.B-8

Form No. 960690

Φ Units: in^2/sec of a Point Source of Strength $10^{+3} in^3/sec$

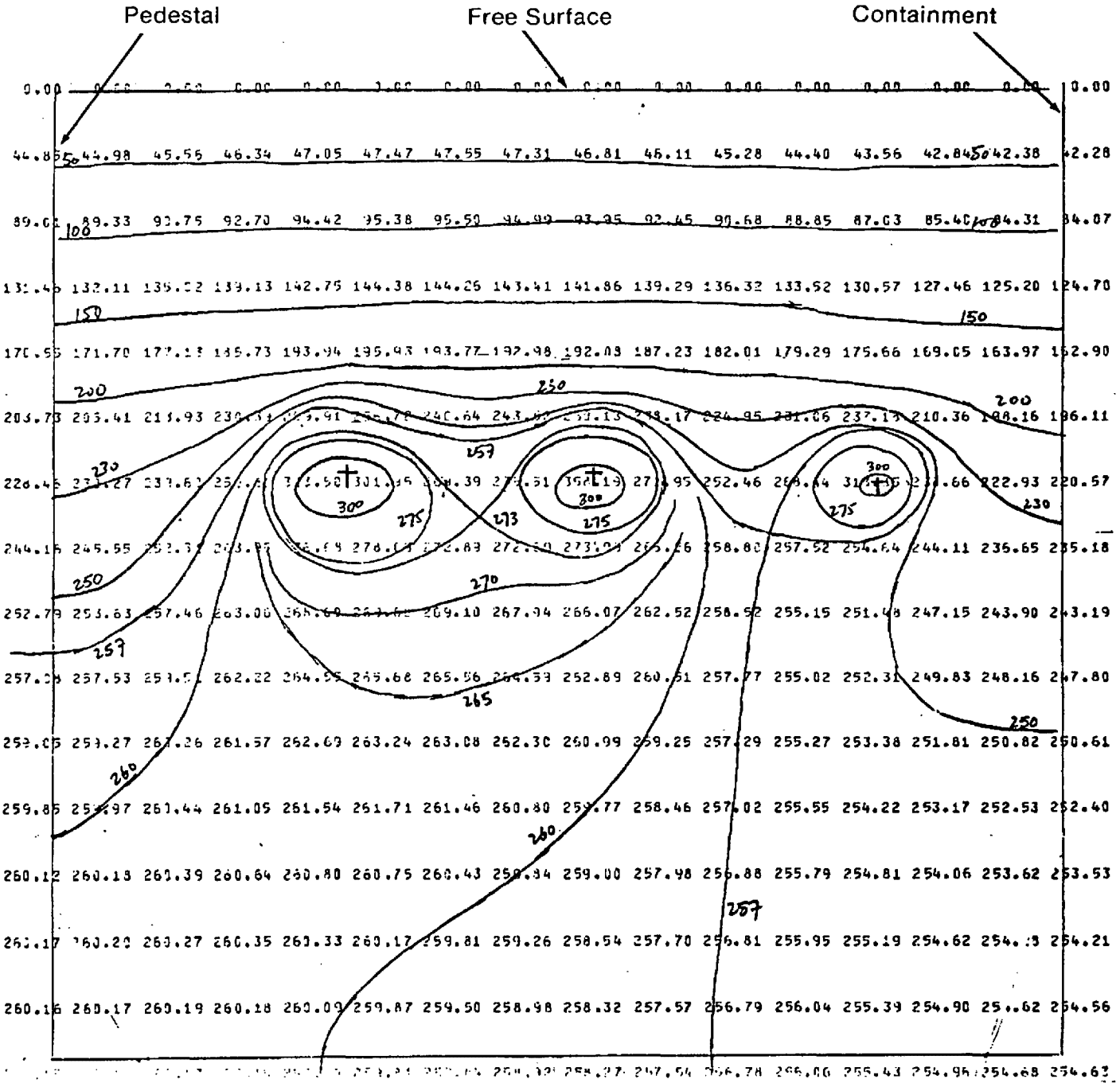

Notes:
1. + indicates radial and vertical locations of the sources.
2. Figure 3A.B-2 shows approximate geometry.

Columbia Generating Station **Final Safety Analysis Report**	**Velocity Potential, Φ, in Plane 0.33° Away from Sources for LOCA Bubble Flat Bottom Case**
	Draw. No. 020361.27 | Rev. | Figure 3A.B-9

Attachment 3A.C

CONCEPT OF DRAG FORCES DUE TO HYDRODYNAMIC FLOW FIELDS

3A.C.1 CONCEPT

The concept of drag forces is described in Reference 3A.C-1 as a means to estimate loads on submerged structures due to flow fields created in a Mark II containment suppression pool by the hydrodynamic events described in Section 3A.3. Loads resulting from the actual distorted flow around a structure may be estimated by postulating an equivalent locally uniform flow field due to the safe forcing function in the pool without any structures. This uniform flow is characterized by the velocity and acceleration fields present at the geometric center of the structure or structural segment. The loads on submerged structures are characterized by drag forces due to locally uniform velocity and acceleration fields. The velocity field causes a standard drag force and a lift force, and the acceleration field causes an acceleration drag force. The total load on the structure or structural component is obtained by the vectorial summation of these forces.

Information essential for calculating the drag loads is identified below.

3A.C.2 FORMULAS FOR DRAG LOADS

In the following three sections, formulas are presented to calculate velocity drag load, acceleration drag load, and lift load. The methodology described below is in general agreement with Reference 3A.3.2-4.

Long structures are divided into segments for more precise evaluation. This is done to account for the variations of the velocity and acceleration along the structure.

3A.C.2.1 Velocity Drag Load

The velocity drag load is calculated using the following formula:

$$P_s = \frac{1}{2}\rho\, C_D\, V_{max}^2$$

where:

P_s = velocity drag pressure amplitude (psi). This pressure acts in the flow direction.

ρ = mass density of water (lb $sec^2/in.^4$).

C_D = standard drag coefficient. Numerical values for C_D are given in the applicable sections of Section 3A.3.

V_{max} = maximum velocity in the direction of flow (in./sec).

3A.C.2.2 Acceleration Drag Load

The acceleration drag load is calculated using the following formula:

$$P_A = \rho C_M \frac{\pi}{4} D V_{max}^2$$

where:

A = acceleration drag pressure amplitude (psi). This pressure acts in the flow direction.

C_M = acceleration drag coefficient. Numerical values for C_M are given in the applicable sections of Section 3A.3.

D = diameter of cylindrical structure (in.). If the structure is not cylindrical, D is the diameter of a cylinder circumscribing the structure.

V_{max} = maximum acceleration in the direction of flow (in./sec^2).

3A.C.2.3 Lift Load

The lift load is calculated using the following formula:

$$P_L = \frac{1}{2} \rho C_L V_{max}^2$$

where:

P_L = lift pressure amplitude (psi). This pressure is normal to the flow direction.

C_L = lift coefficient. Numerical values for C_L are given in the applicable sections of Section 3A.3.

3A.C.3 REFERENCES

3A.C-1 "Analytical Model for Estimating Drag Forces on Rigid Submerged Structures caused by LOCA and Safety/Relief Valve Ramshead Air Discharges," General Electric Company, NEDO-21471, September 1977.

Attachment 3A.D

CALCULATION MODELS FOR SHORT-TERM LOSS-OF-COOLANT ACCIDENT PHENOMENA

3A.D.1 INTRODUCTION

This attachment provides additional information concerning the numerical techniques used to model short term hydrodynamic phenomena. The vent clearing, pool swell, and loss-of-coolant accident (LOCA) bubble numerical models are discussed in Sections 3A.D.2, 3A.D.3, and 3A.D.4 respectively. In each section, the model assumptions, equations, numerical techniques, and verification are either discussed in detail or referenced to the appropriate General Electric document.

3A.D.2 DOWNCOMER VENT CLEARING MODEL

The pool swell analytical model (PSAM), (Reference 3A.D-1), models the pool swell event subsequent to downcomer vent water clearance. Initial conditions required to start the PSAM include the time of vent clearing and the pool surface displacement, velocity, acceleration, and wetwell pressure at the time of vent clearing. In order to provide a time history of the suppression pool surface during the downcomer vent clearing process and a conservative input to the PSAM, the computer code VENT was developed. VENT is a subroutine for the PSAM computer code SWELL (see Section 3A.D.3). By continuity the downcomer vent exit water velocity and acceleration time histories are also calculated. These transients are used as conservative input to the LOCA water jet code (see Section 3A.3.2.3.1.1).

Section 3A.D.2.1 discusses the downcomer vent clearing model development and Section 3A.D.2.2 discusses the experimental verification and the conservatism of the model.

3A.D.2.1 Model Development

Assumptions used in developing the vent clearing model are as follows:

a. The frictional losses of the pool system are conservatively neglected,

b. The wetwell free air volume is isentropically compressed by the upward moving water slug,

c. Heat losses are neglected,

d. The air velocity within the downcomers is small, therefore the air pressure in the vents is conservatively assumed to equal the current drywell pressure,

e. Downcomer vent losses are conservatively neglected, and

f. Viscous effects are neglected.

Figure 3A.D-1 shows a schematic of the vent clearing model. The mathematical derivation of this model is similar to the model in Reference 3A.D-2 with the exception that the vent clearing model described here couples the equation of motion for the vent system with the equation of motion for the pool system.

3A.D.2.1.1 Drywell Pressure

The time varying drywell pressure, P_D, is the driving function for the vent clearing analysis. P_D is not calculated by VENT but is input as data.

3A.D.2.1.2 Water in the Downcomer Vents

The mass of water within the downcomer vents, m', that is being accelerated downward by the increasing drywell pressure transient is given by:

$$m' = \rho_w (H_o - h) A_V \qquad (3A.D\text{-}1)$$

where

ρ_w = the density of water

A_V = the total downcomer vent exit area

H_o = the initial submergence of the downcomers

h = the displacement of the internal downcomer water surface.

3A.D.2.1.3 Water Slug in the Suppression Pool

The mass of the water slug in the suppression pool, m, which is being accelerated upward by the increasing drywell pressure is given by:

$$m = \rho_w (H_o + z) A_p \qquad (3A.D\text{-}2)$$

where

A_p = the net suppression pool water surface area

z = the displacement of the pool surface.

3A.D.2.1.4 Suppression Chamber Air Space

From assumption 2, the transient pressure in the suppression chamber air space, P_s, is calculated from:

$$P_s = P_{so}\left(V_{so}/V_s\right)^k$$

where

$V_s = V_{so} - A_v h$

V_{so} = initial wetwell free air space volume

P_{so} = initial wetwell air pressure

k = specific heat ratio of air.

Combining and solving yields:

$$P_s = P_{so}\left(V_{so}/\left(V_{so} - A_v h\right)\right)^k$$

3A.D.2.1.5 Fluid Dynamics

Refer to Figure 3A.D-1. From Newton's second law, MA = F, the equation of motion for the water inside of the vents is:

$$m' \frac{d^2 h}{dt^2} = \left(P_D - P_\infty\right)A_v = \rho_w A_v \left(H_o - h\right)g$$

where

P_∞ = the pressure at the downcomer vent exit.

Combining with equation 3A.C-1 and solving for $\frac{P_D - P_\infty}{\rho_w}$ yields:

$$\frac{P_D - P_\infty}{\rho_w} = (H_o - h)\frac{d^2n}{dt^2} - (H_o - h)g \qquad (3A.D\text{-}3)$$

Also from Newton's second law, the equation of motion for the water outside of the vents is:

$$m\frac{d^2z}{dt^2} = (P_\infty - P_s)A_p - \rho_w A_p(H_o + z)g$$

Combining with equation 3A.D-2 and solving for $\frac{P_\infty - P_s}{\rho_w}$ yields:

$$\frac{P_\infty - P_s}{\rho_w} = (H_o + z)\frac{d^2z}{dt^2} + (H_o + z)g \qquad (3A.D\text{-}4)$$

Substituting h A_v/A_p for z (see Figure 3A.D-1) in equation 3A.D-4 and then summing equations 3A.D-3 and 3A.D-4 and solving for d^2h/dt^2 yields:

$$\frac{d^2h}{dt^2} = \frac{\frac{P_D - P_s}{\rho_w} - g\,h\left(1 + A_v/A_p\right)}{H_o\left(1 + A_v/A_p\right) - h\left(1 - \left(A_v/A_p\right)^2\right)} \qquad (3A.D\text{-}5)$$

Integration of d^2h/dt^2 yields the downcomer vent water velocity, dh/dt, and displacement, h, transients:

$$\frac{dh}{d5} = \int_0^t \frac{d^2h}{dt^2}\,dt \qquad (3A.D\text{-}6)$$

$$h = \int_0^t \frac{dh}{dt}\,dt \qquad (3A.D\text{-}7)$$

where

t = time after LOCA initiation.

The pool surface acceleration, velocity, and displacement transients are related by continuity to the vent water transients by a factor of A_v/A_p (see Figure 3A.D-1). It is important to note that at $h = H_o$, equation 3A.D-5 is the same as the equation of motion used in the PSAM (Reference 3A.D-7). This implies that equation 3A.D-5 plus the PSAM will provide a continuous and consistent time history of the suppression pool surface displacement during a LOCA.

3A.D.2.1.6 Numerical Integration

Sections 3A.D.2.1.1 and 3A.D.2.1.4 show that the drywell pressure, P_D, and the wetwell air space pressure, P_S are functions of time and vent water displacement, respectively. From equation 3A.D-5 this shows that the downcomer vent water acceleration, d^2h/dt^2, is a function of time and vent water displacement only. This means that equation 3A.D-5 is a second order differential equation of the functional form: $d^2h/dt^2 = f(t,h)$, where $h = h(t)$ by equation 3A.D-7. This allows numerical integration of equation 3A.D-5 using a fourth order Runge-Kutta technique given by equation 25.5.22 of Reference 3A.D-3. Integration of d^2h/dt^2 gives dh/dt and h (equations 3A.D-6 and 3A.D-7, respectively).

3A.D.2.1.7 Termination of Vent Clearing Analysis

Termination of the vent clearing analysis occurs when $H_o - h \leq O$. This is the moment that the vent clearing is completed; or t_o, vent clearance time.

3A.D.2.1.8 Input Data and Results

Input to the VENT subroutine requires data on the following plant characteristics: net pool area (A_p), total downcomer vent exit area (A_v), initial submergence of the downcomers (H_o), initial wetwell pressure (P_{so}), initial wetwell free air volume (V_{so}), and the drywell pressure transient (P_D). Table 3A.3.2-3 shows the CGS input data for the VENT computer code.

The vent exit water velocity and acceleration calculated by VENT are increased by 10% as indicated by the NRC in Reference 3A.3.2-1. The velocity and acceleration time histories (including the 10% increase) are shown in Figures 3A.3.2-2 and 3A.3.2-3, respectively.

3A.D.2.2 Experimental Verification

VENT has been verified against downcomer vent water displacement data from the 4T Test Series 5101, runs 21, 22, 24, and 37 (Reference 3A.D-4). These runs were chosen because they ran the full range of Mark II submergences and drywell pressurization rates. In each run, three conductivity probes were used to determine the displacement of the downcomer vent air/water interface. These probes, shown in Figure 3-3 of Reference 3A.D-5, sense the difference in conductivity between air and water. For each test, the three probes were located

in each downcomer at 0.5 ft, 6.5 ft, and 9.5 ft above the downcomer vent exits (see Figure 3-2 of Reference 3A.D-5).

Tables 3A.D-1 and 3A.D-2 show the input data to VENT for the verification runs. Table 3A.D-3 shows the measured and calculated 4T Test downcomer vent probe water clearing times. Figure 3A.D-2 summarizes the data in Table 3A.D-3 and shows that the comparison is excellent.

3A.D.3 POOL SWELL ANALYTICAL MODEL

In order to conservatively calculate the pool swell transient, the computer code SWELL was developed after the model discussed in References 3A.D-1, 3A.D-6, and 3A.D-7. The equations used in the SWELL computer code are documented in those references. The PSAM is schematically shown in Figure 3A.D-3 and its verification against empirical data and its conservatism is discussed in References 3A.D-1, 3A.D-6, 3A.D-7, and 3A.D-8. Input to SWELL requires data on the following plant characteristics: net pool area, total downcomer vent exit area, initial submergence of the downcomers, initial drywell air pressure, initial wetwell air pressure, initial drywell air temperature, initial wetwell free air volume, initial drywell humidity, downcomers loss coefficient, time of vent clearing, vent clearing velocity, and drywell air pressure transient.

Figures 3A.D-4 through 3A.D-9 are plots of pool surface velocity and pool surface elevation obtained with SWELL for the three benchmark plants presented in Reference 3A.D-7. (Note: for these verification runs, the vent clearing subroutine described in Section 3A.D.2 is not used since the vent clearing velocity and time are given in Reference 3A.D-7.) These plots are provided for comparison with the data included in Reference 3A.D-7 as benchmark problems for the SWELL code and show good agreement.

3A.D.4 LOSS-OF-COOLANT ACCIDENT BUBBLE CHARGING MODEL

The one-dimensional PSAM (see Section 3A.D.3) describes the bulk flow process in the suppression pool during a postulated pool swell event. This model assumes a flow field in the vertical direction only. The assumption of predominately vertical flow has been verified by small scale multivent pool swell tests. However, observation of these tests have shown that prior to LOCA bubble coalescence and the forming of an air blanket under the pool water slug, a significant three-dimensional flow field is developed. In response to these observations, new analytical techniques were developed in order to model the LOCA bubble charging event. The purpose of the LOCA bubble charging model, therefore, is to describe the three-dimensional flow fields during the early portion of the pool swell phenomenon.

In order to calculate the transient flow fields in the CGS suppression pool during the LOCA bubble charging portion of a postulated pool swell event, the computer code SOURCE was developed (see Attachment 3A.B). The application of the SOURCE code to the LOCA bubble

charging phenomenon is schematically shown in Figure 3A.B-2. This method uses point sources with the appropriate source strength to represent the LOCA bubble charging event in the exact CGS suppression pool geometry. In using this method it is assumed that all vents uniformly charge air into spherical bubbles with centers one downcomer radius below the vent exits. To calculate the transient LOCA bubble charging flow field, the rate of bubble growth is determined by continuity from the pool surface rise obtained from the PSAM. A comparison of the similarity between this method and the method discussed in Reference 3A.D-9 is provided in Table 3A.D-4.

3A.D.4.1 Potential Flow Field

The three-dimensional potential flow field calculation method that is the basis for the SOURCE computer code is described in Attachment 3A.B. Also described in Attachment 3A.B are the numerical techniques, the flow field calculation procedure, and the conservation, convergence, and accuracy checks of the method. Results for the CGS LOCA bubble charging case is discussed in Sections 3A.B.7 and 3A.3.2.

Although both methods use the same assumptions of potential flow, point sources to represent bubbles, and uniformly charging spherical bubbles, the SOURCE code is used instead of the method of images (MOI) (Reference 3A.D-9) to determine finite pool effects. This is because the SOURCE code models the exact CGS suppression pool geometry, whereas the MOI has to idealize the pool's annular boundaries and sloping floor characteristics.

3A.D.4.2 Source Strength Calculation

The rate of air charging (and, therefore, the rate of bubble radius growth) is determined by continuity from the pool surface rise obtained from the PSAM. In using this method, it is assumed that all vents uniformly charge air into spherical bubbles with centers 1 ft 0 in. below the vent exits. The PSAM method of calculating a transient source strength for use in determining the flow field during LOCA bubble charging is used for the CGS instead of the method presented in Reference 3A.D-9. Source strengths calculated using both methods are presented in the following sections where it is shown that the PSAM method is preferable to the method of Reference 3A.D-9 in that it is more conservative and has experimental verification. General Electric has developed a method to calculate the equivalent bubble charging velocity and acceleration source strengths for a point source in a finite pool. It is described in Reference 3A.D-9. Air bubbles at the downcomer vents during the LOCA bubble charging process are assumed to be spherical. The bubble radius growth time history is obtained by assuming the bubble dynamics are represented by the Rayleigh equation coupled with a mass and energy balance for the bubble. Because the Rayleigh equation models the bubble dynamics in an infinite pool, a factor "K" must be solved for each bubble to correct for finite pool boundary effects. This factor is then multiplied by the Rayleigh bubble velocity and acceleration source strengths to solve for the finite pool velocity and acceleration source strengths at each bubble as shown in Figure 3A.D-10. Table 3A.D-5 provides some CGS

LOCA bubble charging pool surface velocities and accelerations obtained using the source strength method or Reference 3A.D-9 along with the SOURCE computer code. Extensive small scale multivent pool swell tests have shown that the pool surface remains relatively flat during the LOCA bubble charging process. For CGS, the pool surface transient is calculated by the PSAM (see Section 3A.D.3). It is evident in References 3A.D-1 and 3A.D-7 that the PSAM estimates of the pool surface transient during the early portion of pool swell (which is LOCA bubble charging) consistently bounds all experimental data. The small scale multivent pool swell tests also indicate bubble sphericity during the early portion of the transient.

With these observations it is possible to obtain the bubble velocity and acceleration source strengths from the PSAM calculated pool surface transient by continuity as shown in Figure 3A.D-11. Table 3A.D-5 provides some LOCA bubble charging pool surface velocities and accelerations obtained for CGS using the Reference 3A.D-9 method and the PSAM methods for comparison. It is seen that while pool surface accelerations are similar, the pool surface velocities from the Reference 3A.D-9 method are less than 50% of the PSAM values. Therefore, for CGS the PSAM method is conservatively accepted for LOCA bubble source strength definitions.

Figure 3A.3.2-7 shows the velocity, Q(t) and acceleration, $\dot{Q}(t)$, source strengths which are used in CGS load calculations.

3A.D.5 REFERENCES

3A.D-1 Ernst, R. J., Ward, M. G., Mark II Pressure Suppression Containment Systems: An Analytical Model of the Pool Swell Phenomenon, General Electric Company, NEDE-21544-P (Proprietary), December 1976.

3A.D-2 The General Electric Pressure Suppression Containment Analytical Model, General Electric Company, NEDM-10320, April 1971.

3A.D-3 Handbook of Mathematical Functions with Formulas, Graphs, and Mathematical Tables, National Bureau of Standards - Applied Mathematics Series .55, May 1968.

3A.D-4 Phases I, II, and III of the Temporary Tall Tank Test (4T) Program, an Applications Memorandum, Preliminary Draft, General Electric Company, December 1976.

3A.D-5 Mark II - Pressure Suppression Test Program, General Electric Company, NEDE-13442-P-01, May 1976.

3A.D-6 Response to NRC Question 020.68, Appendix A, WNP-2, DAR, Revision 2, August 1979.

3A.D-7 Mark II Containment Dynamic Forcing Functions Information Report (DFFR), General Electric Company, NEDE-21061, Revision 3, June 1978.

3A.D-8 Comparison of the 1/13 Scale Mark II Containment Multivent Pool Swell Data with Analytical Methods, General Electric Company, NEDO-21667, August 1977.

3A.D-9 Moody, F. J., Analytical Model for Estimating Drag Forces on Rigid Submerged Structures Caused by LOCA and Safety Relief Valve Ramshead Air Discharges, General Electric Company, NEDE-21471 (Proprietary), September 1977.

Table 3A.D-1

Vent Clearing Analytical Model Input Data

Parameter	21	22	24	37
Net pool area[a], ft^2	35.17	35.17	35.17	35.17
Downcomer vent flow area, ft^2	2.0211	2.0211	2.0211	2.0211
Downcomer submergency, ft	13.15	9.0	13.5	11.0
Integration time step, sec	0.0001	0.0001	0.0001	0.0001
Initial wetwell free air volume, ft^3	950	1108	950	1038
Drywell pressure time history, psia	See Table 3A.D-2			

[a] Excludes area of downcomer.

Table 3A.D-2

Measured 4T Test Series 5101 Drywell Dome
Pressure Time History

Run 21		Run 22		Run 24		Run 37	
Time (sec)	Pressure (psia)	Time (sec)	Pressure (psia)	Time (sec)	Pressure (psia)	Time (sec)	Pressure (psia)
0.	14.63	0.	14.57	0.	14.55	0.	14.54
0.037	14.65	0.037	14.80	0.040	14.53	0.041	14.52
0.055	15.12	0.058	15.30	0.058	14.66	0.060	14.60
0.076	15.61	0.079	15.87	0.076	15.35	0.078	14.93
0.097	15.73	0.097	16.16	0.097	16.12	0.096	16.04
0.115	15.91	0.115	16.42	0.113	16.52	0.114	17.28
0.134	16.18	0.133	16.70	0.133	17.11	0.133	17.91
0.152	16.42	0.152	17.01	0.154	17.80	0.153	18.46
0.170	16.54	0.170	17.47	0.173	18.41	0.174	19.35
0.189	16.80	0.191	17.98	0.191	19.04	0.193	19.94
0.210	17.27	0.212	18.47	0.210	19.54	0.211	20.44
0.230	17.80	0.230	10.89	0.228	20.03	0.230	20.97
0.249	13.10	0.249	19.42	0.246	20.52	0.248	21.54
0.267	18.41	0.267	19.79	0.267	21.07	0.266	22.21
0.285	13.79	0.285	20.33	0.288	21.67	0.287	23.00
0.303	19.08	0.304	20.80	0.306	22.22	0.308	23.77
0.322	19.32	0.324	21.29	0.324	22.73	0.326	24.40
0.343	19.70	0.345	21.87	0.343	23.19	0.344	24.99
0.363	20.03	0.364	22.36	0.361	23.64	0.363	25.54
0.382	20.37	0.382	22.95	0.380	24.11	0.381	26.16
0.400	20.64	0.400	23.29	0.400	24.68	0.400	26.77
0.419	20.94	0.419	23.72	0.421	25.12	0.420	27.40
0.437	21.27	0.437	24.23	0.440	25.61	0.441	27.91
0.455	21.69	0.458	24.75	0.458	26.10	0.460	28.40
0.476	22.06	0.479	25.34	0.476	26.68	0.478	29.00
0.497	22.46	0.497	25.85	0.494	27.21	0.496	29.63
0.515	22.81	0.515	26.30	0.513	27.78	0.514	30.24
0.534	23.15	0.533	26.78	0.533	28.33	0.533	30.81
0.552	23.46	0.552	27.23	0.554	28.87	0.553	31.40
0.570	23.80	0.570	27.76	0.573	29.32	0.574	31.95
0.539	24.13	0.591	28.14	0.591	29.79	0.593	32.43
0.610	24.51	0.612	28.61	0.610	30.21	0.611	32.90
0.630	24.88	0.630	28.99	0.628	30.70	0.630	33.37
0.649	25.26	0.649	29.40	0.646	31.10	0.668	33.79
0.667	25.59	0.667	29.81	0.667	31.63	0.666	34.22
0.685	25.91	0.685	30.21	0.688	32.14	0.687	34.80
0.703	26.22	0.704	30.68	0.706	32.57	0.708	35.35
0.722	26.58	0.724	31.16	0.724	33.01	0.726	35.78

Table 3A.D-2

Measured 4T Test Series 5101 Drywell Dome Pressure
Time History (Continued)

Run 21		Run 22		Run 24		Run 37	
Time (sec)	Pressure (psia)	Time (sec)	Pressure (psia)	Time (sec)	Pressure (psia)	Time (sec)	Pressure (psia)
0.743	27.01	0.745	31.61	0.743	33.44	0.744	36.23
0.763	27.33	0.764	31.98	0.761	33.90	0.763	36.71
0.782	27.61	0.782	32.32	0.780	34.37	0.781	37.08
0.800	27.86	0.800	32.58	0.800	34.78	0.800	37.46
0.819	29.18	0.819	32.87	0.821	35.20	0.820	37.79
0.837	28.39	0.837	33.11	0.840	35.49	0.841	38.05
0.855	28.81	0.858	33.31	0.858	35.81	0.860	38.25
0.876	29.12	0.878	33.52	0.876	36.13	0.878	38.35
0.897	29.48	0.897	33.68	0.894	36.52	0.896	38.52
0.915	29.78	0.915	33.80	0.913	36.84	0.914	38.68
0.934	30.07	0.933	33.88	0.933	37.17	0.933	38.78
0.952	30.39	0.952	33.96	0.954	37.47	0.953	33.84
0.970	30.66	0.970	34.36	0.973	37.74	0.974	38.88
0.989	30.92	0.991	34.10	0.991	37.96	0.993	38.98
1.010	31.29	1.102	34.15	1.010	38.18	1.011	39.00
1.030	31.57	1.030	34.21	1.028	38.31	1.030	39.04
1.049	31.87	1.049	34.19	1.046	38.41	1.048	39.06
1.067	32.08	1.067	34.17	1.067	38.57	1.066	39.08
1.085	32.26	1.085	34.17	1.088	38.59	1.087	39.11
1.103	32.54	1.104	34.18	1.106	38.61	1.108	39.10
1.122	32.67	1.124	34.08	1.124	38.65	1.126	39.08
1.142	32.85	1.145	34.38	1.143	38.65	1.144	39.08
1.163	33.07	1.169	34.32	1.161	38.63	1.163	39.06
1.182	33.19	1.182	33.90	1.180	38.61	1.181	39.06
1.200	33.33	1.200	33.88	1.200	38.61	1.200	39.06
1.219	33.38	1.218	33.80	1.221	38.55	1.220	39.02
1.237	33.44	1.237	33.76	1.240	38.49	1.241	38.94
1.255	33.50	1.258	33.64	1.258	38.43	1.260	38.92
1.276	33.60	1.278	33.54	1.276	38.35	1.278	38.90
1.297	33.60	1.297	33.50	1.294	38.26	1.296	38.88
1.315	33.66	1.315	33.44	1.313	38.20	1.314	38.84
1.333	33.62	1.333	33.35	1.333	38.08	1.353	38.89
1.352	33.56	1.352	33.29	1.354	37.98	1.353	38.89
1.370	33.46	1.370	33.19	1.373	37.92	1.374	38.82
1.389	33.42	1.391	33.13	1.391	37.78	1.393	38.82

Table 3A.D-3

Comparison of Measured and Calculated 4T Test
Probe Water Clearing Times

Probe Elevation Above Downcomer Exit (ft)	Probe Water Clearing Time (sec)			
	21[a]	22[a]	24[a]	37[a]
9.5	0.667 (0.687)	Initially dry	0.573 (0.582)	0.381 (0.388)
6.5	0.800 (0.811)	0.458 (0.467)	0.688 (0.688)	0.533 (0.533)
0.5	0.952 (0.961)	0.667 (0.654)	0.800 (0.813)	0.687 (0.670)

[a] 4T run number.

Note: Unbracketed numbers are measured data. Bracketed Numbers are calculated data.

Table 3A.D-4

Comparison Between Source Method
and the Reference 3A.D-9 Method for Calculation
of the Loss-of-Coolant Accident Bubble Charging Event

	Item	Source	Reference 3A.D-9	Comments
1.	Uses potential flow assumption	Yes	Yes	Same
2.	Uses point source to represent charging LOCA bubbles	Yes	Yes	Same
3.	All vents assumed to charge uniformly into spherical bubbles one radius below downcomers	Yes	Yes	Same
4.	Finite pool effects	Uses numerical scheme discussion in Attachment 3A.B of this Report	Uses MOI	-
5.	Models CGS annular suppression pool geometry	Yes	No	For MOI, the CGS annular pool geometry must be idealized into a rectangular pool using an "equivalent radius" concept.
6.	Models CGS sloping pool bottom	Yes	No	For MOI, the CGS sloping pool bottom needs to be idealized into a flat pool bottom.
7.	Transient source strength	Determined by continuity from pool surface rise obtained from the PSAM	Determined from Rayleigh bubble dynamics equation in an infinite pool and a finite pool correction factor "K"	Source method results in the same conservatism as PSAM flow field calculations. Source method yields higher velocities and accelerations than the method discussed in Reference 3A.D-9.
8.	Experimental verification of source strength	Yes	No	Source method determined directly from PSAM. PSAM has extensive experimental verification as to its conservatism.

Table 3A.D-5

Comparison of Results of Source and Method
of Reference 3A.D-9 Bubble Charging
Source Strength Methods

Time After Vent Clearing (sec)	GE Method[a]		PSAM Method[b]	
	V(ft/sec)	$\dot{V}$ (ft/sec^2)	V(ft/sec)	$\dot{V}$ (ft/sec^2)
0.	1.215	83.136	5.308	80.977
0.066[c]	4.872	81.767	10.613	79.772
0.24[d]	-	-	22.074	53.983

V = average pool surface velocity
$\dot{V}$ = average pool surface acceleration

[a] Source strength method documented in Reference 3A.D-9. Flow field data from SOURCE code.

[b] Data obtained from Figures 3A.3.2-4 through 3A.3.2-7.

[c] Near bubble coalescence by Reference 3A.D-9 method.

[d] Bubble coalescence time by SOURCE.

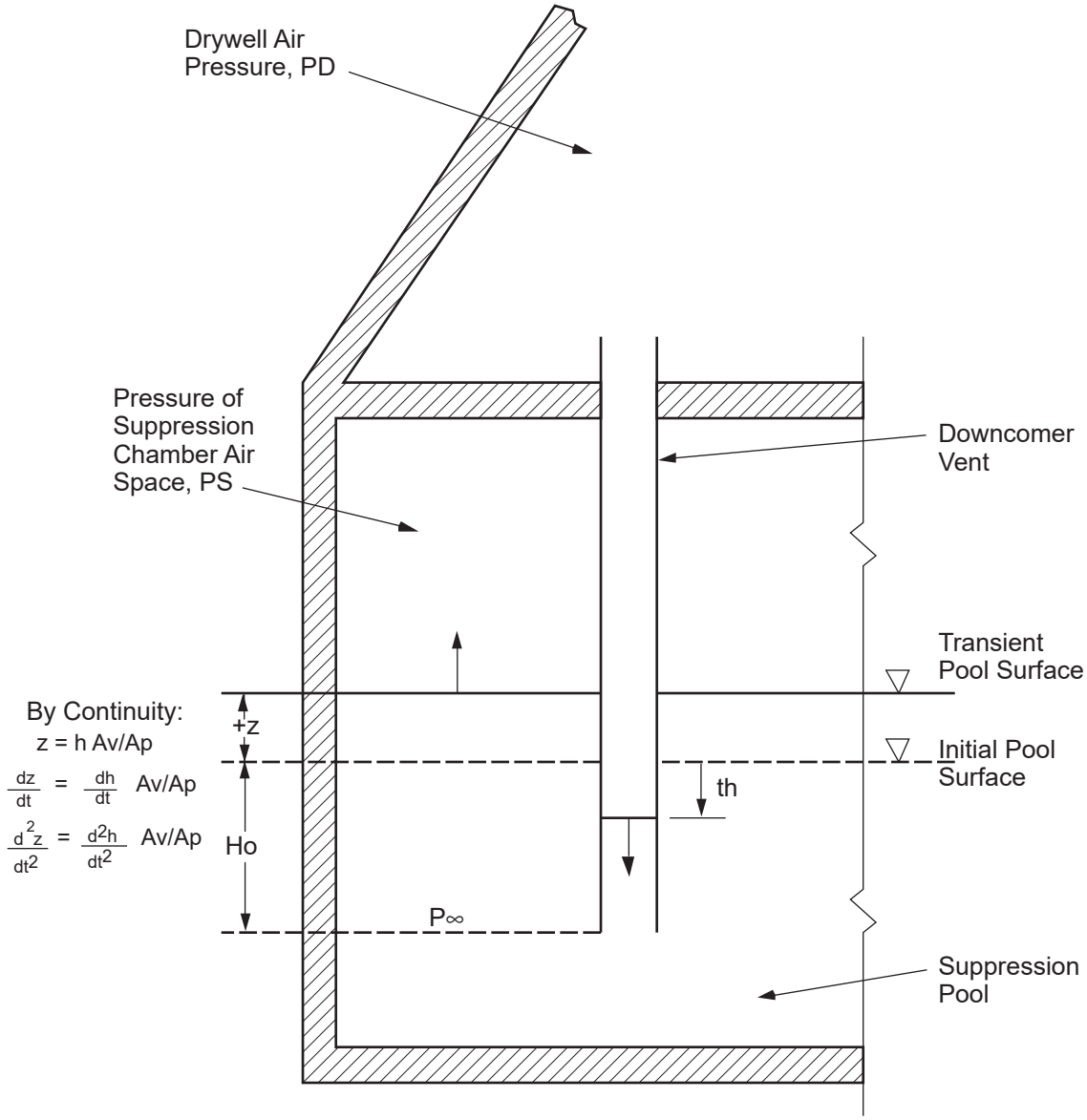

Columbia Generating Station
Final Safety Analysis Report

Schematic Representation of the Vent Clearing Model

Draw. No. 900547.84	Rev.	Figure 3A.D-1

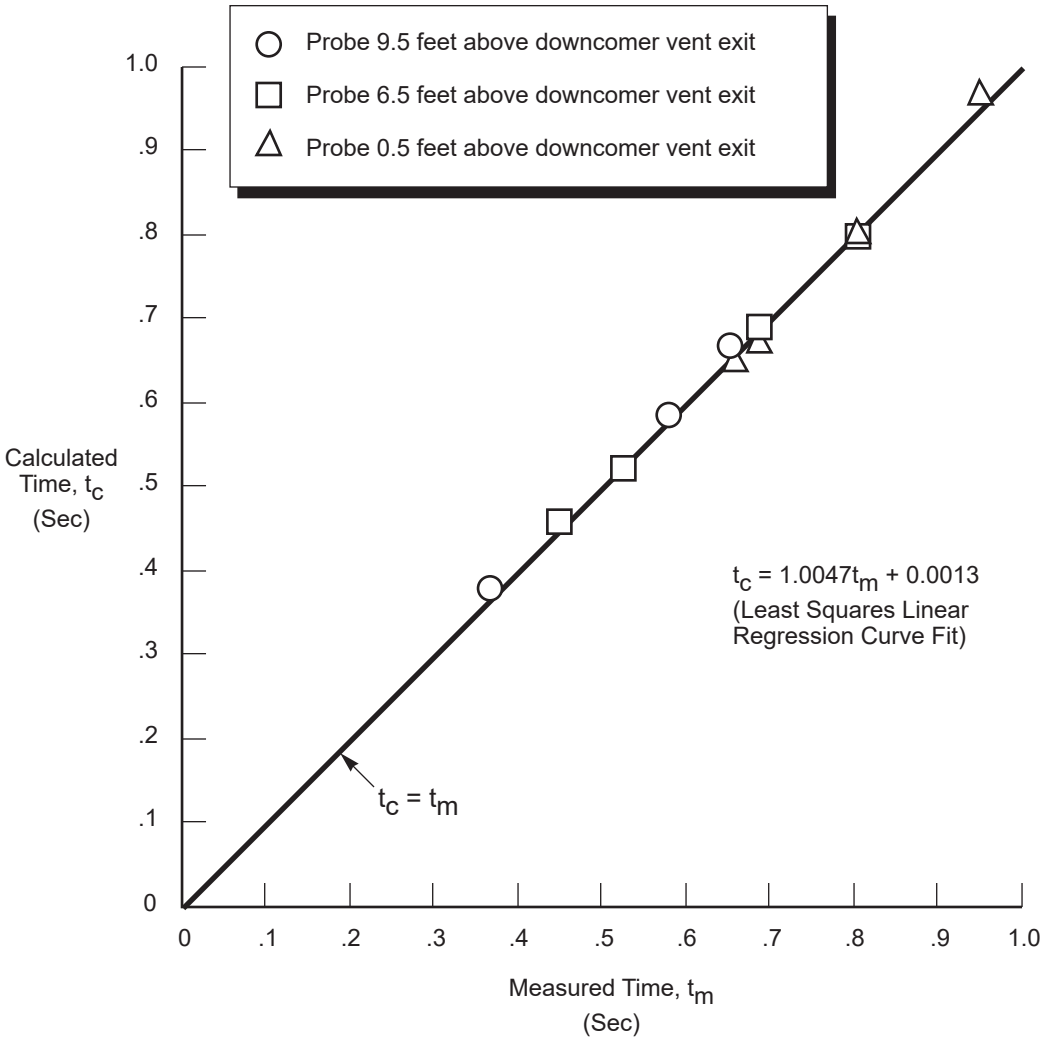

Columbia Generating Station Final Safety Analysis Report	Comparison of Measured and Calculated 4T Test Probe Water Clearing Times		
	Draw. No. 900547.85	Rev.	Figure 3A.D-2

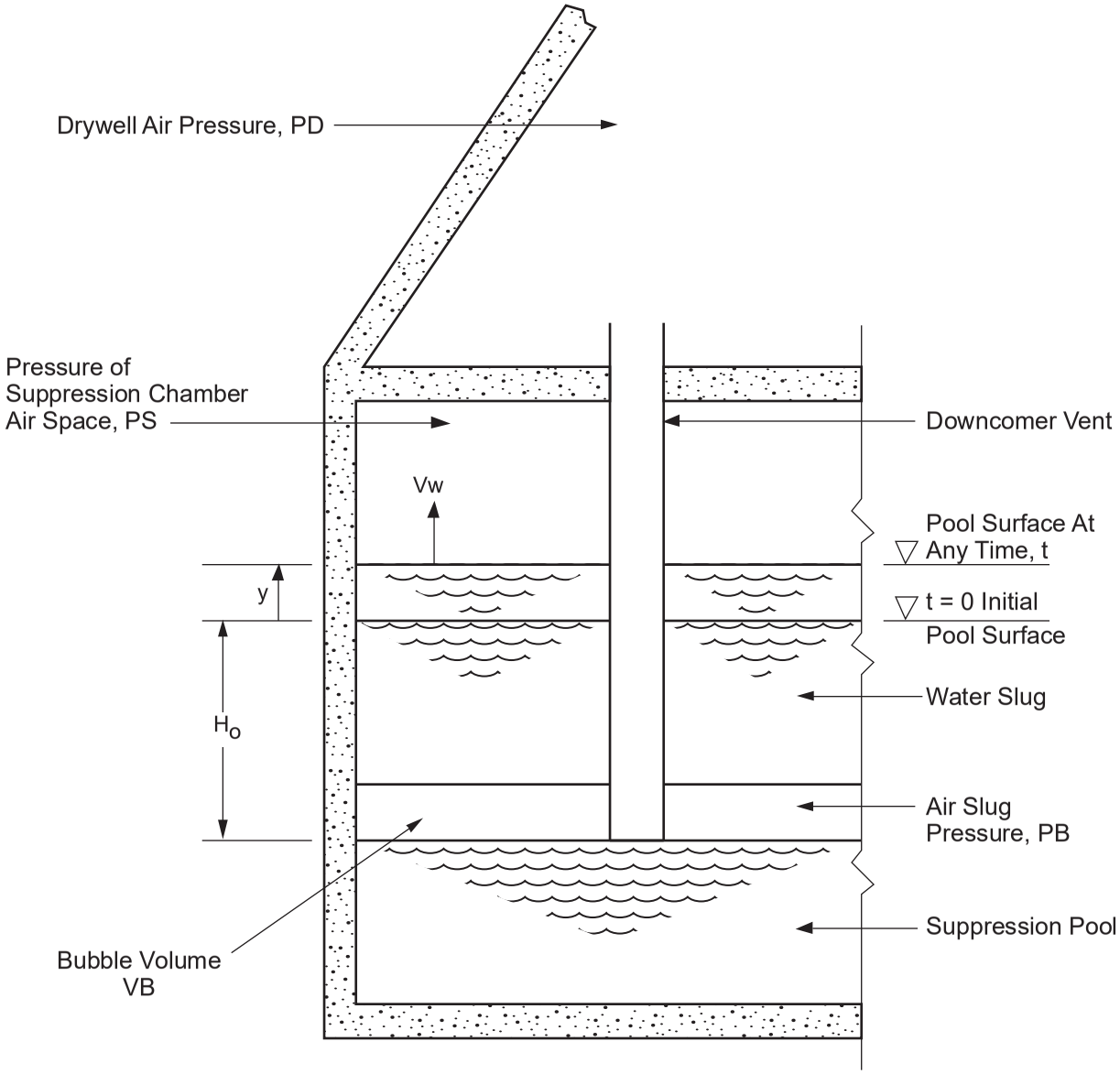

Columbia Generating Station Final Safety Analysis Report	Schematic Representation of the Pool Swell Model		
	Draw. No. 900547.86	Rev.	Figure 3A.D-3

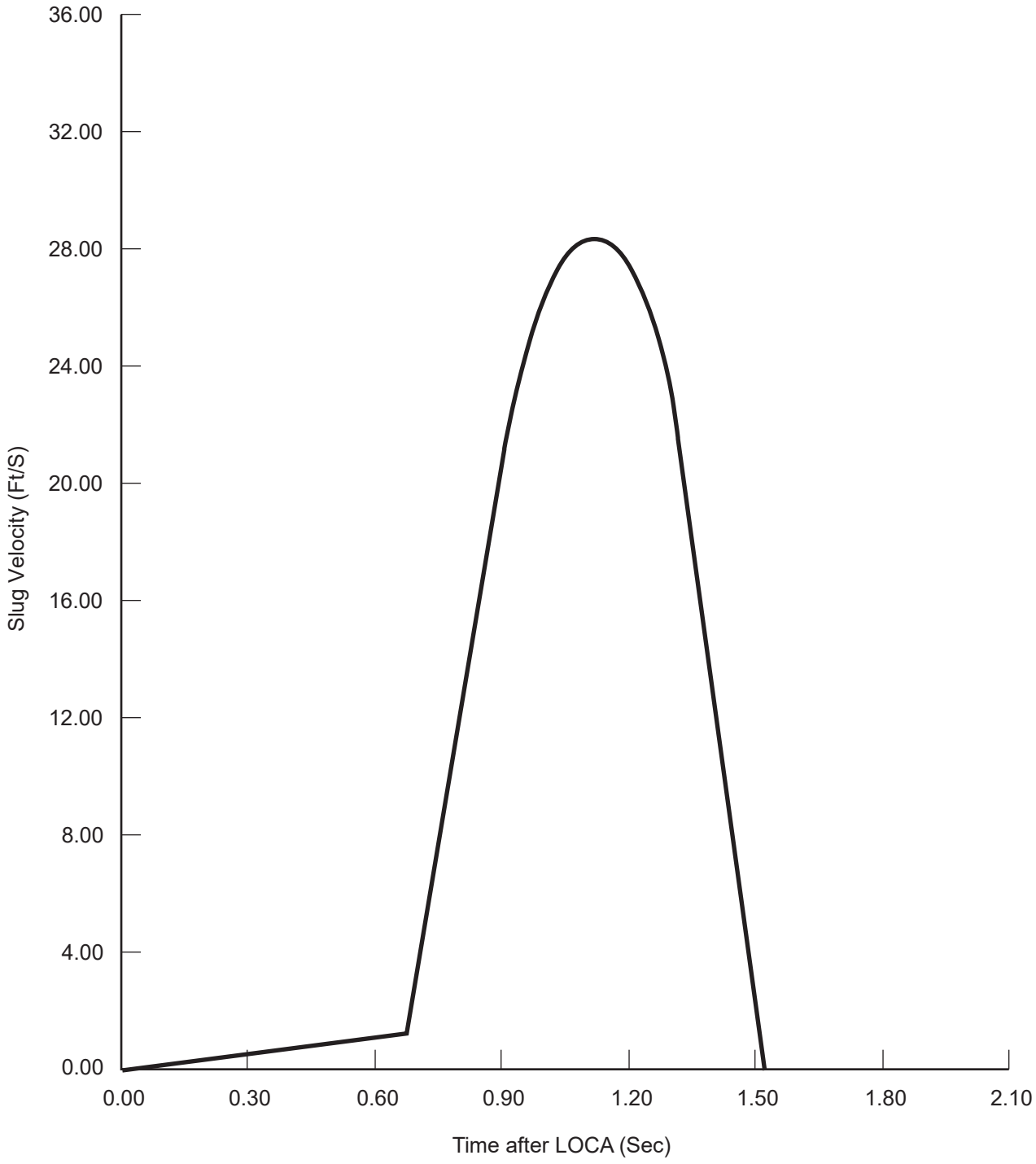

Columbia Generating Station **Final Safety Analysis Report**	**Benchmark I Plant -** **Slug Velocity Versus Time**		
	Draw. No. **900547.87**	Rev.	Figure **3A.D-4**

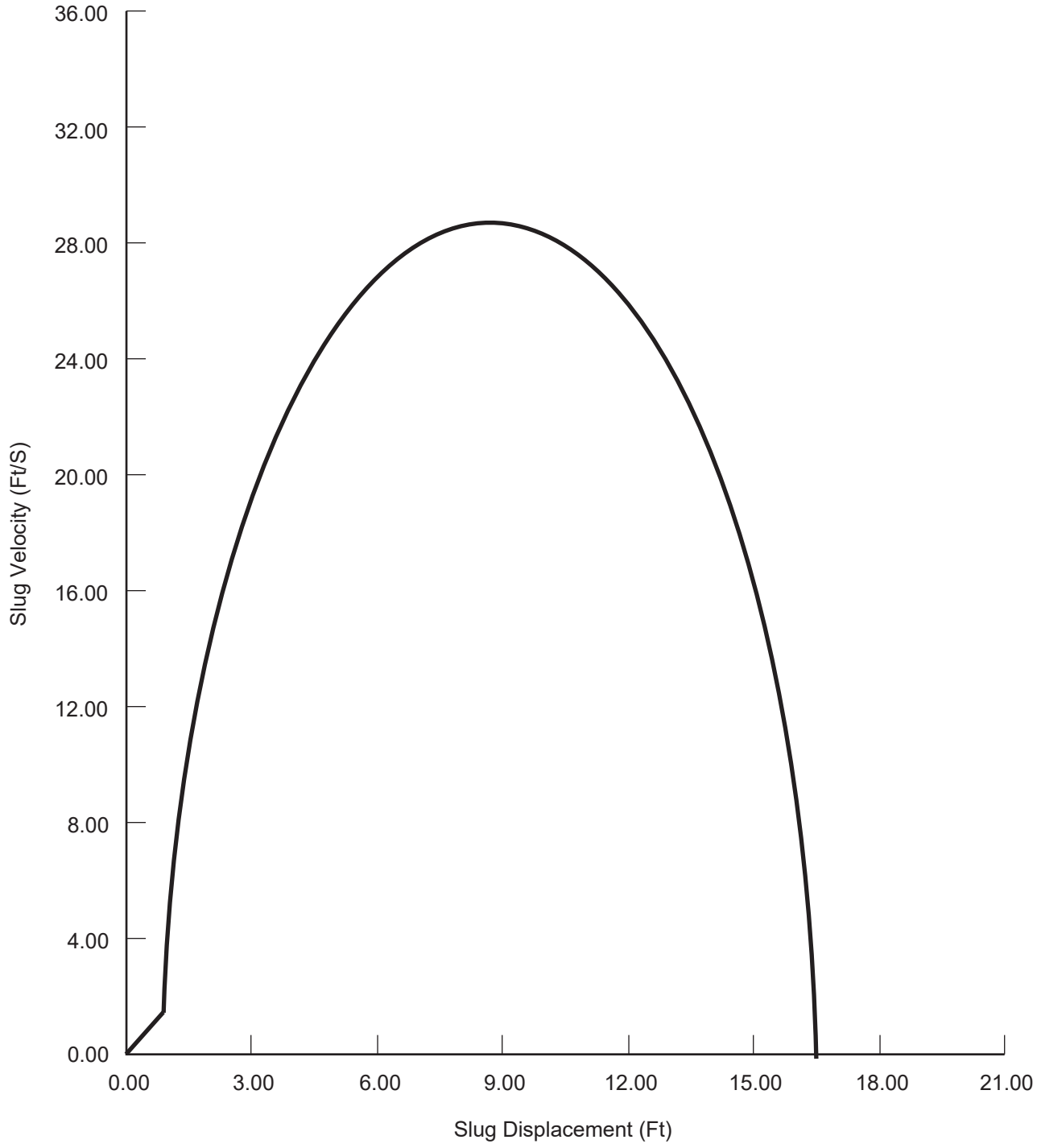

Columbia Generating Station **Final Safety Analysis Report**	**Benchmark I Plant -** **Slug Velocity Versus Displacement**		
	Draw. No. **900547.88**	Rev.	Figure **3A.D-5**

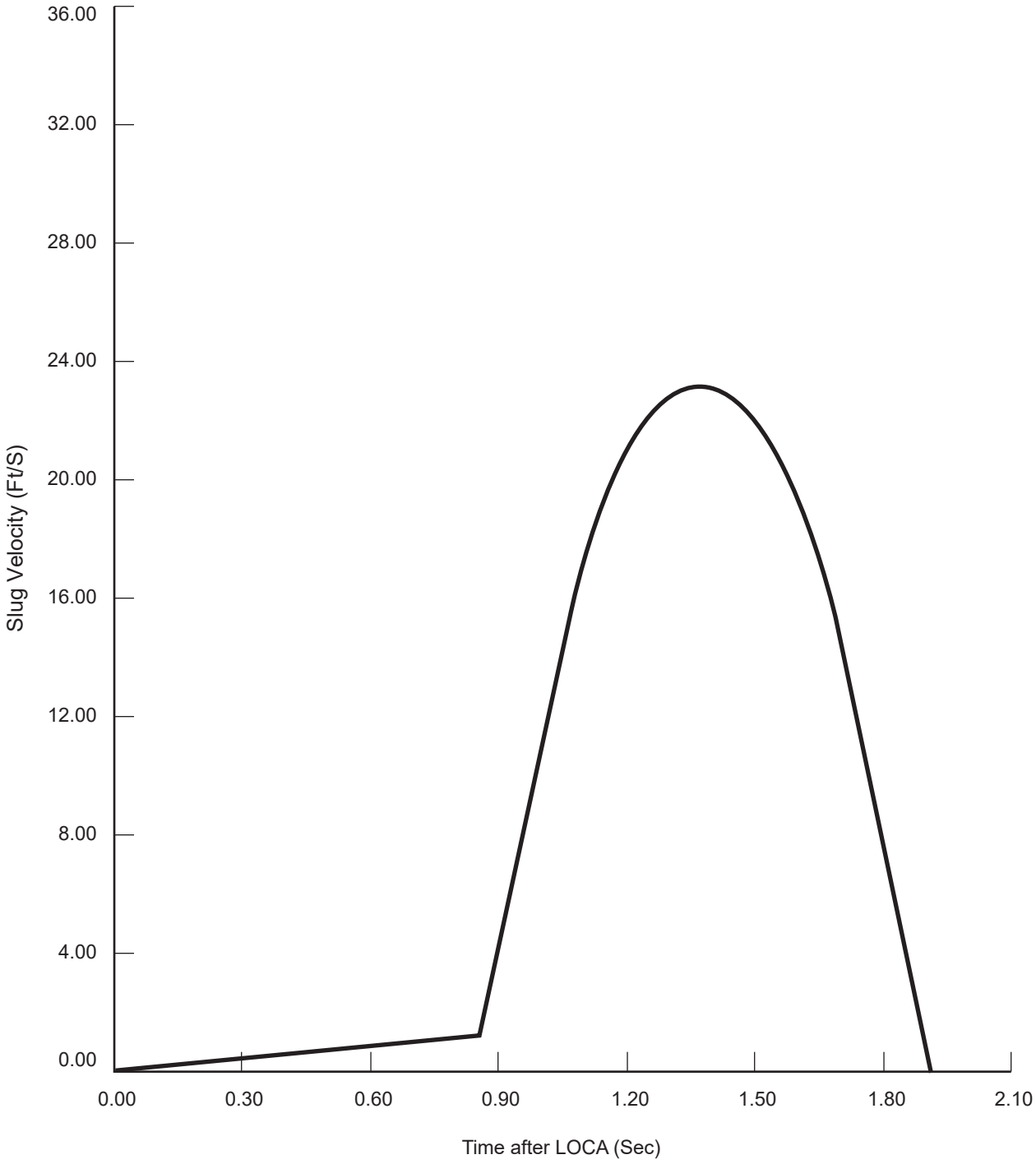

Columbia Generating Station
Final Safety Analysis Report

Benchmark II Plant - Slug Velocity Versus Time

Draw. No. 900547.89	Rev.	Figure 3A.D-6

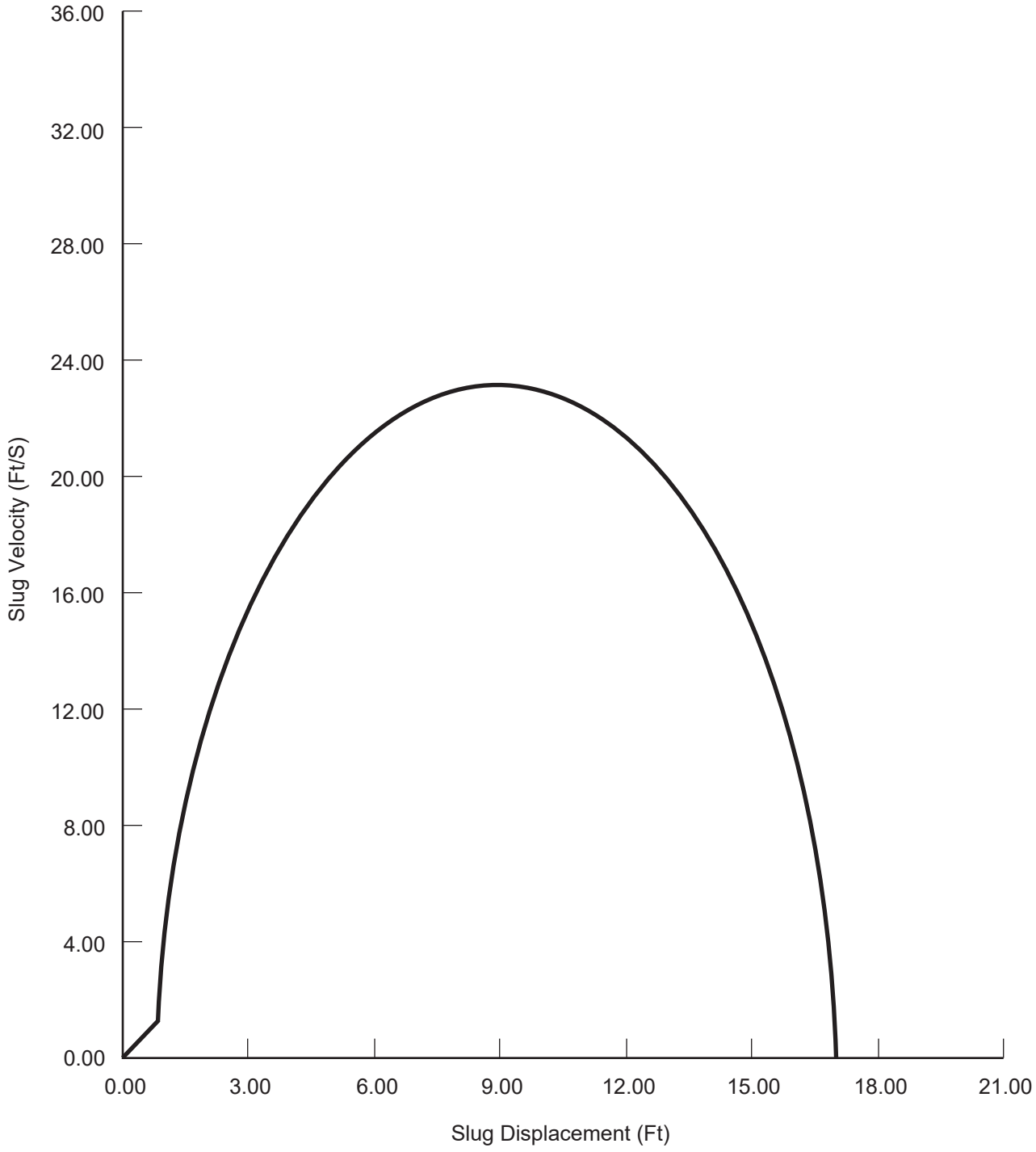

Columbia Generating Station Final Safety Analysis Report	Benchmark II Plant - Slug Velocity Versus Displacement		
	Draw. No. 900547.90	Rev.	Figure 3A.D-7

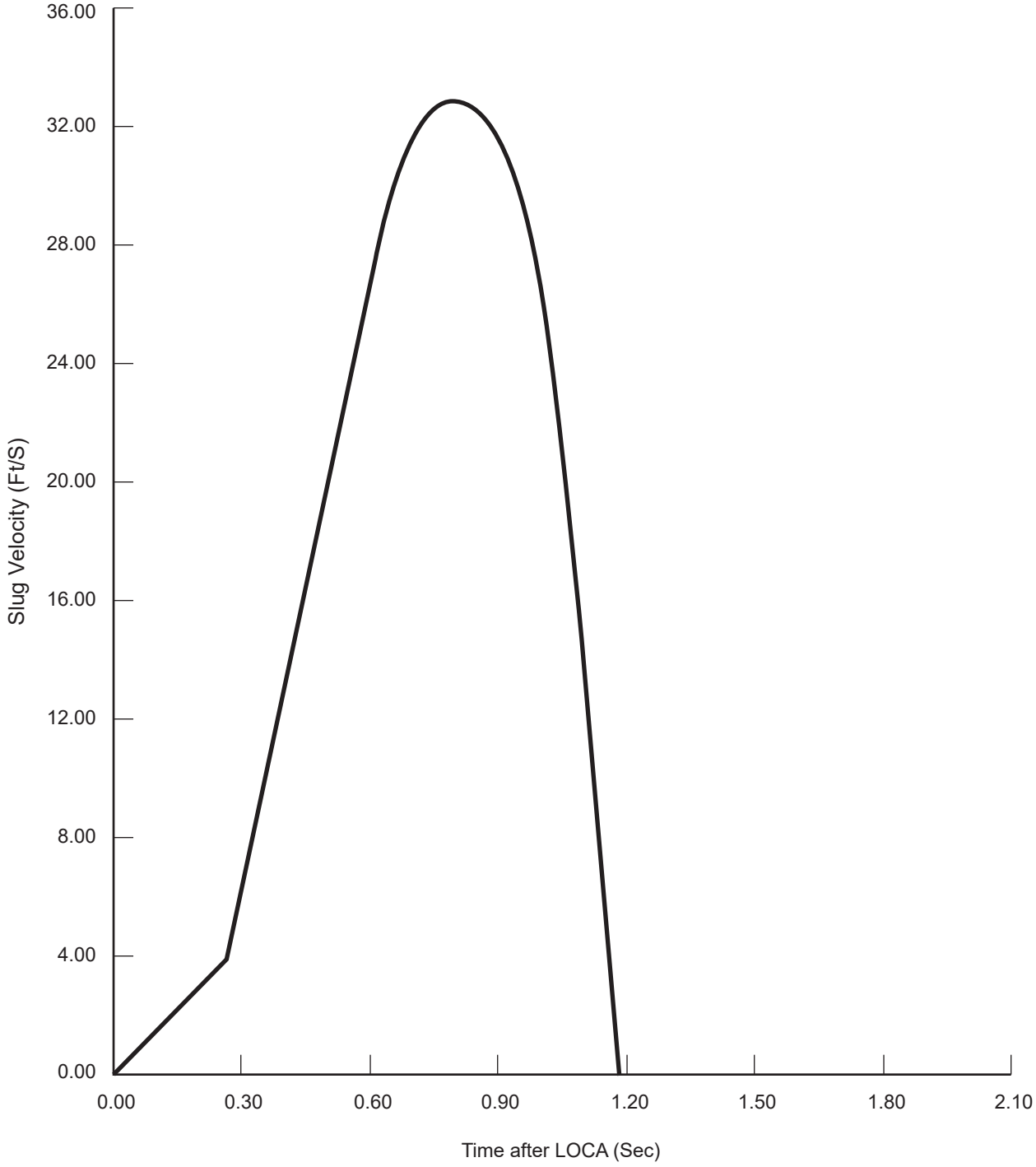

Columbia Generating Station **Final Safety Analysis Report**	**Benchmark III Plant -** **Slug Velocity Versus Time**		
	Draw. No. **900547.91**	Rev.	Figure **3A.D-8**

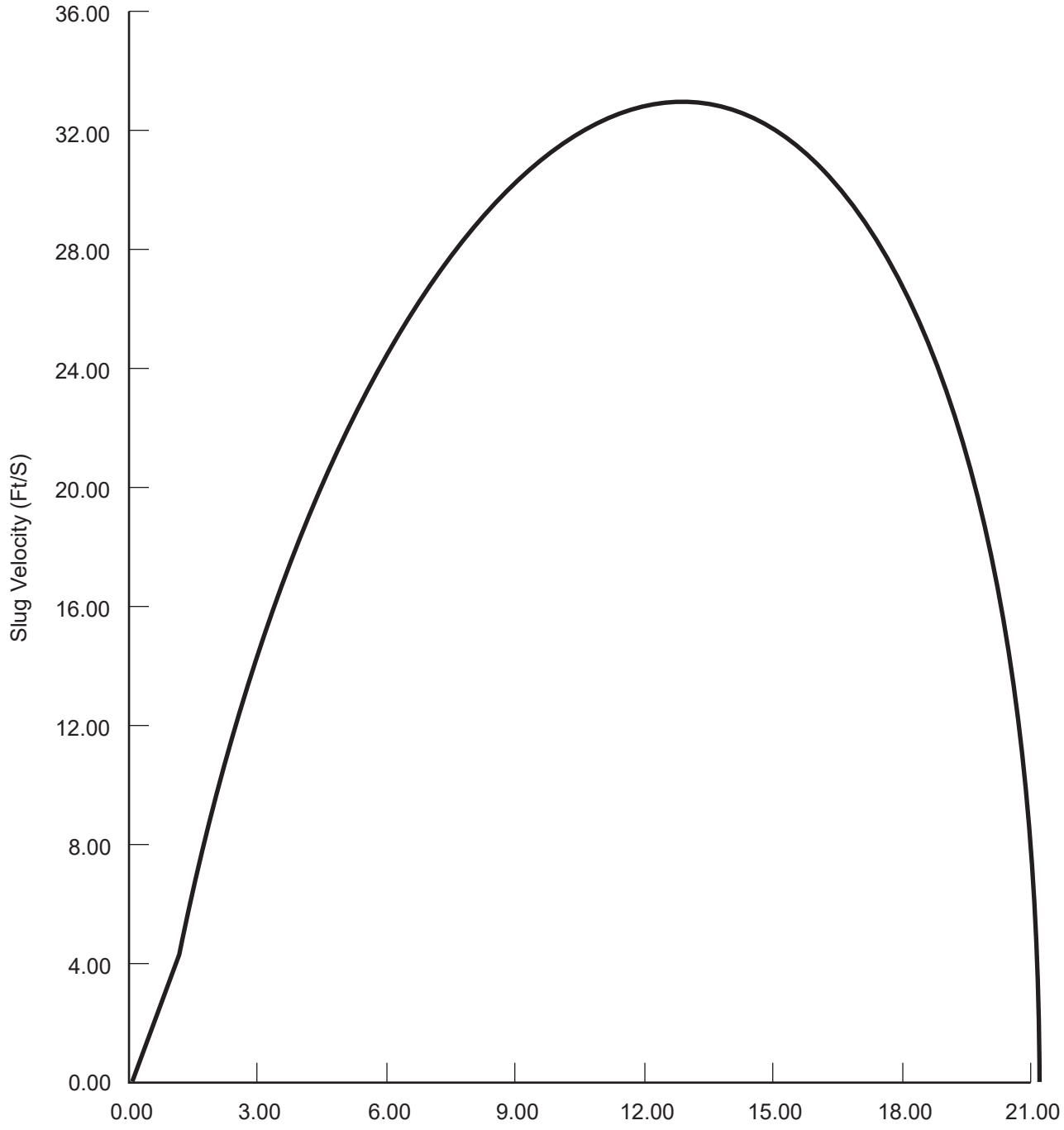

Columbia Generating Station **Final Safety Analysis Report**	**Benchmark III Plant -** **Slug Velocity Versus Displacement**		
	Draw. No. **900547.92**	Rev.	Figure **3A.D-9**

Infinite Pool:

Steps

i) Spherical Bubble Dynamics Governed By Rayleigh Equation:

$$R\ddot{R} + \frac{3}{2}\dot{R}^2 = \frac{g_c}{\rho}(P_B - P_\infty)$$

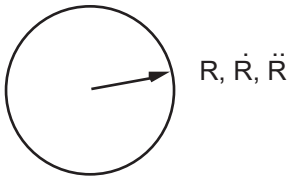

ii) From R, $\dot{R}$, And $\ddot{R}$ Get Source Strengths For Each Bubble

$$Q_i(t) = R^2\dot{R}$$

$$\dot{Q}_i(t) = R^2\ddot{R} + 2R\dot{R}^2$$

Note: $R \equiv R(t)$

$$\dot{R} \equiv \frac{dR}{dt}$$

$$\ddot{R} \equiv \frac{d^2R}{dt^2}$$

Application To Finite Pool:

iii) Determine "K_i" Factor for Each Bubble to Account for Finite Pool and Other Bubble Effects

iv) Modify Source Strength for Each Bubble to Account for Finite Pool and Other Bubble Effects:

$$Q_i(t) = R^2\dot{R}K_i$$

$$Q_i(t) = R^2\dot{R} + 2R\dot{R}^2)K_i$$

v) Superposition Of All Bubbles To Get Flow Field: Velocity V, and Acceleration $\dot{V}$

$$V = -\sum_{i=1}^{102} Q_i(t)\,\nabla\phi_i$$

$$\dot{V} = -\sum_{i=1}^{102} \dot{Q}_i(t)\,\nabla\phi_i$$

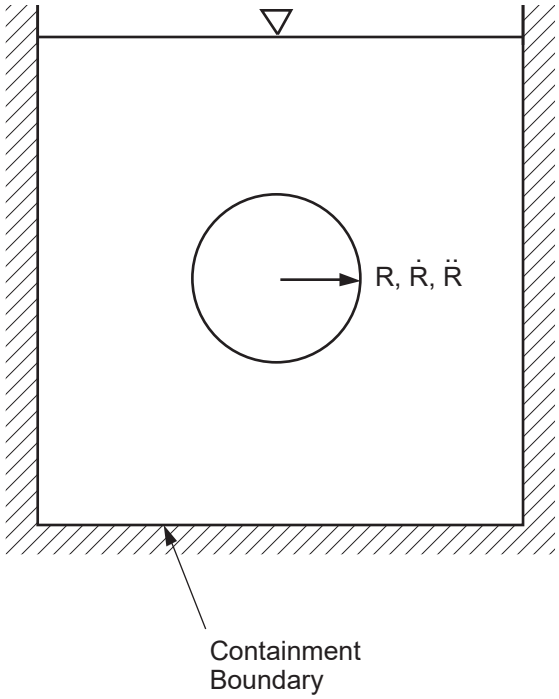

Source: Reference 3A.D-9

Columbia Generating Station Final Safety Analysis Report	**Method of Images**		
	Draw. No. **900547.93**	Rev.	Figure **3A.D-10**

Attachment 3A.E

SUPPRESSION POOL TEMPERATURE MONITORING SYSTEM

3A.E.1 DESIGN BASES

The suppression pool temperature monitoring (SPTM) system monitors the suppression pool bulk temperature with sensors distributed around the suppression pool. This system provides the main control room operator with the information necessary to avoid the conditions which might lead to the high-temperature steam quenching vibration phenomena mentioned below and discussed in detail in Section 3.5 of Reference 3A.E-1. This phenomena is not expected to occur when using a quencher discharge device. However, precautions using the SPTM system are designed to further make the occurrence of the vibrations impossible. Temperatures in the suppression pool are recorded and alarmed in the main control room.

The design basis for the SPTM system alarm setpoints provides the operator with adequate time to take the necessary action required to ensure that the conditions which are postulated to lead to high-temperature steam quenching vibrations do not occur. The design also provides the operator with the necessary information regarding localized heat-up of the pool water while the reactor vessel is being depressurized using the safety/relief valves (SRVs) when the SRVs are selected for actuation, they may be chosen so as to ensure mixing and uniformity of heat energy injection to the pool by monitoring the temperature sensors.

3A.E.1.1 High-Temperature Steam Quenching Vibrations

Boiling water reactor plants take advantage of the large thermal capacity of the suppression pool during plant transients which require SRV actuation. The discharge steam from each SRV is directed through a discharge line and a quencher device to the suppression pool where it is condensed. This results in an increase in pool water temperature, but a negligible increase in containment pressure.

However, certain events such as small pipe break have the potential for substantial energy addition to the suppression pool and could result in a high local pool temperature and the phenomenon of steam quenching vibration if timely corrective action is not taken. Suppression pool structural vibrations would occur during this condensing mode which would be forced by the periodic pulsation of the steam jet at the discharge.

The onset of the high-temperature steam quenching vibration phenomenon is a function of both the local suppression pool water temperature and the steam mass flux rate. The steam mass flux in the SRV piping in turn, is a function of the reactor vessel pressure.

3A.E.2 SYSTEM DESCRIPTION

The CGS SPTM system conformance to the criteria set by paragraph III.c of Reference 3A.E-2 is as discussed below. Specifically, the criteria for the upper ring of the sensors are:

1. Each monitoring location has two redundant type thermocouples monitored in the control room;

2. There are eight monitoring locations equally spaced about the outer containment perimeter;

3. The sensors are mounted 7 in. below the minimum technical specification water level;

4. All sensors are monitored and recorded in the control room;

5. Instrument setpoints for alarms will be set at or below the technical specification temperature values such that the plant can be shutdown and depressurized prior to the water in the suppression pool reaching a temperature at which condensation instabilities are postulated to occur; and

6. The SPTM system sensors are Seismic Category 1, Quality Class 1. The electrical power is Class 1E. Divisional separation is maintained.

In addition to the sensors described above which monitor bulk temperature, there is a second, lower ring of sensors. The lower ring meets Criteria 2, 4, 5, and 6, above. The degree of conformance to Criteria 1 and 3 for the lower ring of sensors is as follows:

1. Each monitoring location has one thermocouple Division 1 and 2 at alternate locations, and

3. The sensors are mounted at el. 447 ft 10.25 in., the approximate elevation of the quencher discharge devices.

Since warmer water is more buoyant, the upper ring provides a more conservative value for bulk temperature than the lower ring. The lower ring of sensors is provided to allow the operator to assess if significant vertical thermal stratification occurs.

3A.E.3 REFERENCES

3A.E-1 Mark II Containment Dynamic Forcing Function Information Report (DFFR), NEDO-21061, Revision 3, June 1978.

3A.E-2 Mark II Containment Lead Plant Program Load Evaluation and Acceptance Criteria, Nuclear Regulatory Commission, NUREG-0487, October 1978.

Attachment 3A.F

COMPUTER PROGRAMS

The following are the programs referenced in this report:

3A.F.1 COMMERCIALLY AVAILABLE PROGRAMS

ANSYS

ANSYS is a large scale general purpose finite element computer program used for the solution of several classes of engineering analysis problems. Analytical capabilities include: static and dynamic analyses; plastic, creep and swelling analyses; and steady state and transient heat transfer analyses.

NASTRAN

NASTRAN is a large scale general purpose finite element computer program used for the solution of several classes of engineering analysis problems. Analytical capabilities include: static and dynamic analyses; thermal analyses; and the determination of eigenvalues for use in vibration analyses.

MCAUTO-STRUDL

MCAUTO-STRUDL is a commercially available computer program with general capability for the static and dynamic analysis of structures. The program, which is serviced and maintained by the McDonnell Douglas Automation Company, St. Louis, Missouri, has had wide commercial usage for many years.

ADLPIPE

ADLPIPE is a commercially available program used for the analysis of piping systems. Analytical capabilities include: static and dynamic analyses; and thermal analyses including thermal transient and fatigue evaluations for Class 1 piping systems.

FLUSH

FLUSH is a non-linear plain strain finite element seismic analysis program for soil-structure interaction analysis.

3A.F.2 BURNS AND ROE DEVELOPED PROGRAMS

BESSEL

BESSEL is a computer program which computes semi-analytical hydrodynamic added masses (incompressible fluids) for cylindrical and annular geometries

HYDI-1

HYDI-1 is a finite element program which computes hydrodynamic added masses and incident pressures for compressible fluids in three dimensional geometries.

FOX/HYDI-2

FOX/HYDI-2 is a finite element computer program used for the dynamic analysis for axisymmetric structures. The program performs the analysis by determining structural displacements in the frequency domain.

SWELL

This program is discussed in detail in Attachment 3A.D.

VENT

This program is discussed in detail in Attachment 3A.D.

SOURCE

This program is discussed in detail in Attachment 3A.B.

Attachment 3A.H

CONFORMANCE OF CGS DESIGN TO NRC ACCEPTANCE CRITERIA

Table 3A.H-1 is a summary of the CGS position for each of the pool dynamic loads. This table provides a description of each load or phenomenon, the Mark II Owner's Group load specification, the NRC evaluation reference, and the CGS position on the acceptance criteria for each load.

Table 3A.H-1

Conformance of CGS Design to NRC Acceptance Criteria

Load or Phenomenon	Mark II Owners Group Load Specification	NRC Evaluation	CGS Position on Acceptance Criteria
I. Loss-of-coolant accident (LOCA)-related hydrodynamic loads			
A. Submerged boundary loads during vent clearing	24 psi over-pressure added to local hydrostatic below vent exit (walls and basemat) - linear attenuation to pool surface.	II.A.1 [a]	Acceptable
B. Pool swell loads			
1. Pool swell analytical model (PSAM)			
a) Air bubble pressure	Calculated by the PSAM used in calculation of submerged boundary loads.	III.B.3.a [b]	Acceptable
b) Pool swell elevation	Use PSAM with polytropic exponent of 1.2 to a maximum swell height which is the greater of 1.5 vent submergence or the elevation corresponding to the drywell floor uplift P per NUREG 0487 criteria I.A.4. The associated maximum wetwell air compression is used for design assessment.	II.A.2 [c]	Acceptable

Table 3A.H-1

Conformance of CGS Design to NRC Acceptance Criteria (Continued)

Load or Phenomenon	Mark II Owners Group Load Specification	NRC Evaluation	CGS Position on Acceptance Criteria
c) Pool swell velocity	Velocity history vs. pool elevation predicted by the PSAM used to compute impact loading on small structures and drag on gratings between initial pool surface and maximum pool elevation and steady-state drag between vent exit and maximum pool elevation. Analytical velocity variation is used up to maximum velocity. Maximum velocity applies thereafter up to maximum pool swell. PSAM predicted velocities multiplied by a factor of 1.1.	III.B.3.a.3 [a]	Acceptable
d) Pool swell acceleration	Acceleration predicted by the PSAM. Pool acceleration is utilized in the calculation of acceleration loads on submerged components during pool swell.	III.B.3.a.4 [b]	Acceptable
e) Wetwell air compression	Wetwell air compression is calculated by PSAM.	II.A.2 [c]	Acceptable
f) Drywell pressure	Methods of NEDM-10320 and NEDO-20533 Appendix B. Utilized in PSAM to calculate pool swell loads.	III.B.3.a.6 [b]	Acceptable

Table 3A.H-1

Conformance of CGS Design to NRC Acceptance Criteria (Continued)

Load or Phenomenon	Mark II Owners Group Load Specification	NRC Evaluation	CGS Position on Acceptance Criteria
2. Loads on submerged boundaries	Maximum bubble pressure predicted by the PSAM added uniformly to local hydrostatic below vent exit (walls and basemat) liner attenuation to pool surface. Applied to walls up to maximum pool elevation.	III.B.3.b [b]	Acceptable
3. Impact loads			
a) Small structures	1.35 x pressure-velocity correlation for pipes and I beams based on PSTF impulse data and flat pool assumption. Variable pulse duration.	III.B.3.c.1 [b]	Acceptable
b) Large structures	None - Plant-unique load where applicable.	III.B.3.c.6 [b] Criteria A.5 [a]	Acceptable. CGS has no large structures in the pool swell zone
c) Grating	No impact load specified. P drag vs. open area correlation and velocity vs. elevation history from the PSAM. P drag multiplied by dynamic load factor.	III.B.3.c.3 [b] Criteria A.3 [a]	Acceptable

Table 3A.H-1

Conformance of CGS Design to NRC Acceptance Criteria (Continued)

Load or Phenomenon	Mark II Owners Group Load Specification	NRC Evaluation	CGS Position on Acceptance Criteria
4. Wetwell air compression			
a) Wall loads	Direct application to the PSAM calculated pressure due to wetwell compression.	III.B.3.d.1 [b]	Acceptable
b) Diaphragm floor upward loads	5.5 psid for diaphragm floor loadings only.	2.12.7 [a]	Acceptable
5. Asymmetric pool LOCA	Use 20% of maximum pressure statistically applied to 1/2 of the submerged bubble.	II.A.3 [c] Criteria A-4 [a]	Acceptable
C. Steam condensation and chugging loads			
1. Downcomer lateral loads			
a) Single vent loads (24 in.)	Use single vent dynamic lateral load developed in NEDE-23806.	2.3.3.2 [a] Criteria B.1.a [a]	Acceptable
b) Multiple vent loads (24 in.)	Use multivent dynamic lateral load developed in NEDE-24106-P and NEDE-24794-P.	2.3.3.3 [a]	Acceptable
c) Single/multiple vent loads (28 in.)	Multiply basic vent loads by factor f=1.34	2.3.2.1 [a] B.1.b [a]	Acceptable

Table 3A.H-1

Conformance of CGS Design to NRC Acceptance Criteria (Continued)

Load or Phenomenon	Mark II Owners Group Load Specification	NRC Evaluation	CGS Position on Acceptance Criteria
2. Submerged boundary loads			
a) High/medium steam flux condensation oscillation (CO) load	Use method described in NEDE-24288-P[d]	2.2.2.1.3 [a]	CO loads are not governing design condition for CGS
b) Low steam flux chugging loads	Representative pressure fluctuation taken from 4TCO (NEDE-24285-P) test added to local hydrostatic	2.2.2.3 [a]	Plant unique. Chugging report entitled "Chugging Loads-Revised. Definition and Application Methodology for Mark II Containments" submitted July 1981
- Uniform loading conditions	Use method described in NEDE-24302-P[d]		See above
- Asymmetric loading	Representative pressure fluctuation taken from 4TCO test [NEDE-24285-P] applied as described in NEDE-24822-P.		See above

Table 3AH-1

Conformance of CGS Design to NRC Acceptance Criteria (Continued)

Load or Phenomenon	Mark II Owners Group Load Specification	NRC Evaluation	CGS Position on Acceptance Criteria
II. Safety/relief valve (SRV)-related hydrodynamic loads			
A. Pool temperature limits for X-quencher	20°F subcooling at quencher elevation for steam mass flux of 42 lb/ft^2-sec or less. 200°F for steam flux greater than 94 lb/ft^2-sec.	6.2.1.8.8 (5) A (4)	Acceptable
B. Quencher air clearing loads	Mark II plants utilizing the four arm quencher, use quencher load methodology described in DFFR.	Criteria II.2 [b]	CGS Plant unique SRV (x-quencher) load report entitled "SRV Loads - Definition and Application Methodology for Mark II Containments" submitted August 1980
C. Quencher arm and tie-down loads	Includes vertical and lateral arm load transmitted to the basemat via the tie-down.	III.C.2.e.2 [b]	Acceptable
1) X-quencher arm loads	Vertical and lateral loads developed on the basis of bounding assumption for air/water discharge from the quencher and conservative combinations of maximum/ minimum bubble pressure acting on the quencher.	III.C.2.e.1	Acceptable

Table 3A.H-1

Conformance of CGS Design to NRC Acceptance Criteria (Continued)

Load or Phenomenon	Mark II Owners Group Load Specification	NRC Evaluation	CGS Position on Acceptance Criteria
2. X-quencher tie-down loads	II.C.1 above plus vertical transient wave and thrust loads. Thrust load calculated using a standard momentum balance. Vertical and lateral moments for air or water clearing are calculated based on conservative clearing assumptions.	III.C.2.e.2 [b]	Acceptable
III. LOCA/SRV submerged structure loads			
A. SRV air bubble loads			
1. Standard drag in Accelerating flow fields	Drag Coefficients are presented in Attachment 1.k of the Zimmer FSAR.	Acceptable with the following modification: 1) Use $C_H = C_M - 1$ in the F_A formula 2) For noncylindrical structures use lift coefficient for appropriate shape or $C_L = 1.6$	Generic methodology acceptable. (Amplitudes for SRV loads verified by CAORSO data on submerged structures).

Table 3A.H-1

Conformance of CGS Design to NRC Acceptance Criteria (Continued)

Load or Phenomenon	Mark II Owners Group Load Specification	NRC Evaluation	CGS Position on Acceptance Criteria
		3) The standard drag coefficient for pool swell and SRV oscillating bubbles should be based on data for structures with sharp edges	
2. Equivalent uniform flow velocity and acceleration	Structures are segmented into small sections such that $1.0 \leq L/D \leq 1.5$. The loads are then applied to the geometric center of each segment.	Acceptable	See III. A.1. above
3. Interference effects	A detailed methodology is presented in Attachment 1.k of the Zimmer FSAR.	Acceptable	See III. A.1 above
B. LOCA jet loads	Calculated by the Ring Vortex Model.	2.2.4.3 [a]	Acceptable

Table 3A.H-1

Conformance of CGS Design to NRC Acceptance Criteria (Continued)

Load or Phenomenon	Mark II Owners Group Load Specification	NRC Evaluation	CGS Position on Acceptance Criteria
C. Steam condensation drag loads	No generic load methodology provided	CGS load specification and NRC review is addressed in CGS SER	Generic "drag load" methodology acceptable Plant unique flow fields are consistent with I.C.2.a and I.C.2.b of this table. (See DAR Attachment 3A.I)
IV. Secondary loads			
A. Sonic wave load	Negligible load - none specified	Acceptable	Acceptable
B. Compressive wave load	Negligible load - none specified	Acceptable	Acceptable
C. Post swell wave load	No generic load provided	Plant unique load specification addressed in CGS SER	
D. Seismic slosh load	No generic load provided	Plant unique load specification addressed in CGS SER	

Table 3A.H-1

Conformance of CGS Design to NRC Acceptance Criteria (Continued)

Load or Phenomenon	Mark II Owners Group Load Specification	NRC Evaluation	CGS Position on Acceptance Criteria
E. Fallback load on submerged boundary	Negligible load - none specified	Acceptable	Acceptable
F. Thrust loads	Momentum balance	Acceptable	Acceptable
G. Friction drag loads on vents	Standard friction drag calculations	Acceptable	Acceptable
H. Vent clearing loads	Negligible load - none specified	Acceptable	Acceptable

[a] NRC Acceptance Criteria set forth in NUREG-0808.

[b] NRC Acceptance Criteria set forth in NUREG-0487.

[c] NRC Acceptance Criteria set forth in Supplement 1 of NUREG-0487.

[d] NRC Acceptance Criteria set forth in WNP-2 SER NUREG (0892).

Attachment 3A.I

SAFETY/RELIEF VALVE AND LOSS-OF-COOLANT ACCIDENT LOADS ON SUBMERGED STRUCTURES

3A.I.1 INTRODUCTION

The loss-of-coolant accident (LOCA)/safety/relief valve (SRV) discharge devices and other submerged structures are shown in Figures *3A.2.1-2, 3A.2.1-6, 3A.2.1-7, and 3A.2.1-8* and identified in Table 3A.I-1.

The most significant hydrodynamic load for each structure is identified in Table 3A.I-1.

3A.I.2 SUMMARY OF METHODOLOGY USED FOR DEFINING LOSS-OF-COOLANT ACCIDENT JET/BUBBLE LOADS

Loss-of-coolant accident jet/bubble loads are defined using the ring vortex model. The pool is divided into zones and to ensure conservatism in design, the largest velocity and acceleration values seen by a submerged structure are assumed equal to the maximum calculated values anywhere in the applicable zone. The LOCA bubble charging model is used to verify/ensure that the design values are conservative.

3A.I.3 SUMMARY OF METHODOLOGY USED FOR DEFINING LOSS-OF-COOLANT ACCIDENT STEAM CONDENSATION LOADS

Generic “drag load” methodology and plant unique flow fields are used for LOCA steam condensation loads on submerged structures in compliance with the NRC acceptance criteria. Plant unique flow fields are defined consistently with steam condensation boundary loads.

The generic methodology identifies three components of flow induced loads on submerged structures: acceleration dependent and velocity square dependent in-line loads, velocity square dependent lift load (normal to the direction of flow).

Representative plant unique chugging flow fields show that the chugging loads on submerged structures are due to acceleration or pressure gradients established in the pool during the impulsive chugging phenomenon, i.e., velocity dependent loads are small.

3A.I.4 SUMMARY OF METHODOLOGY USED FOR DEFINING SAFETY/RELIEF VALVE LOADS

Caorso SRV test data on submerged structures are examined to supplement theoretical approaches of the acceptance criteria. The data and their correlation with theoretical approaches of the acceptance criteria confirm that SRV loads are primarily due to pressure

gradients established in the pool during the SRV discharge, i.e., velocity dependent loads are small.

The dynamic pressure gradients measured across Caorso column, vent and SRV line are used to define the peak load values (at quencher elevation), the spatial distribution of the load and its time dependence.

The pressure time histories recorded on submerged structures show waveform characteristics similar to those recorded at pool boundary. The SRV loads on submerged structures are defined consistently with the plant unique boundary loads.

The SRV loads on Columbia Generating Station structures are calculated using the following formula:

$$P = \left[\frac{\pi D^2}{4}\right]\left[\frac{d^2_{Caorso}}{d^2_{WNP2}}\right] \alpha\, P_b\, L$$

where:

P = load on a structure (force/unit length)

D = diameter of the structure

α = a load gradient factor established using Caorso SRV test data on submerged structures. The method to calculate (α) is explained in the notes for and in Figure 3A.I-1

d_{Caorso} = horizontal distance of the structure from the nearest actuating quencher in Caorso plant

d_{WNP2} = horizontal distance of the structure from the nearest actuating quencher

P_b = boundary pressure load definition from Reference 3A.I-1 including any modifications agreed upon with the NRC

L = load margin = minimum value of 1.4 is used for all piping which are adequately braced and a value of 2.0 is used for the column which is the only unbraced structure and is closest to the nearest quencher

Notes on Figure 3A.I-1

1. The SRV load gradient is obtained from Caorso data as follows:

$$A = \frac{P_f - P_{ba}}{D} = \alpha P_{19}$$

where:

A = measured gradient across the cylindrical structure

P_f = P_{front}

P_{ba} = P_{back}

2. P_{19}, P_f, P_{ba} waveform characteristics are similar.

3. The value of (α) for each set of P_f (P_{42}, P_{41}, P_{33}, P_{24}) and P_{ba} (P_{40}, P_{39}, P_{53}) is obtained from Caorso SRV test data (single and multiple valve actuations).

4. For miscellaneous piping which run along the suppression pool boundary, the load gradient factor (α) equal to that for the column is specified.

3A.I.5 REFERENCES

3A.I-1 "SRV Loads - Improved Definition and Application Methodology for Mark II Containments," Technical Report (Proprietary), prepared by Burns and Roe, Inc. for application to Washington Public Power Supply System Nuclear Project No. 2, submitted to the Nuclear Regulatory Commission on 7/29/80.

Table 3A.I-1

Loss-of-Coolant Accident/Safety/Relief Valve Loads
on Submerged Structures

Identification of Structures	Identification of Most Significant Hydrodynamic Load
1. (a) SRV line	SRV (due to actuation of adjacent SRV) [a]
(b) Quencher [b]	LOCA jet on arms
(c) Quencher Support [b]	None significant
2. Downcomer vents	SRV
3. Concrete columns	SRV
4. Bracing truss [b] at vent exit	Pool swell drag
5. Platform with grating (at el. 472 ft 4 in., 78% open area)	Pool swell drag
6. Miscellaneous piping, penetrations and supports along containment boundary	
(a) Below vent exit (el. 454 ft 4.75 in.)	LOCA jet and SRV [a]
(b) Above vent exit, below initial pool surface (el. 466 ft 4.75 in.)	Pool swell drag
(c) Above initial pool surface, below maximum pool swell (el. (484 ft 4.75 in.)	

[a] See also discussion presented in Reference 3A.3.1-8.

[b] Loads on discharge devices and their supports during discharge through the devices are addressed elsewhere.

Chapter 4

REACTOR

TABLE OF CONTENTS

Section — Page

4.1 SUMMARY DESCRIPTION 4.1-1
4.1.1 REACTOR VESSEL 4.1-1
4.1.2 REACTOR INTERNAL COMPONENTS 4.1-1
4.1.2.1 Reactor Core 4.1-2
4.1.2.1.1 General 4.1-2
4.1.2.1.2 Core Configuration 4.1-4
4.1.2.1.3 Fuel Assembly Description 4.1-4
4.1.2.1.3.1 Fuel Rod 4.1-4
4.1.2.1.3.2 Fuel Bundle 4.1-4
4.1.2.1.4 Assembly Support and Control Rod Location 4.1-5
4.1.2.2 Shroud 4.1-5
4.1.2.3 Shroud Head and Steam Separators 4.1-6
4.1.2.4 Steam Dryer Assembly 4.1-6
4.1.3 REACTIVITY CONTROL SYSTEMS 4.1-7
4.1.3.1 Operation 4.1-7
4.1.3.2 Description of Rods 4.1-7
4.1.3.3 Supplementary Reactivity Control 4.1-9
4.1.4 ANALYSIS TECHNIQUES 4.1-9
4.1.4.1 Reactor Internal Components 4.1-9
4.1.4.1.1 MASS (Mechanical Analysis of Space Structure) *4.1-10*
4.1.4.1.1.1 Program Description *4.1-10*
4.1.4.1.1.2 Program Version and Computer *4.1-10*
4.1.4.1.1.3 History of Use *4.1-10*
4.1.4.1.1.4 Extent of Application *4.1-10*
4.1.4.1.2 SNAP (MULTISHELL) *4.1-10*
4.1.4.1.2.1 Program Description *4.1-10*
4.1.4.1.2.2 Program Version and Computer *4.1-10*
4.1.4.1.2.3 History of Use *4.1-11*
4.1.4.1.2.4 Extent of Application *4.1-11*
4.1.4.1.3 GASP *4.1-11*
4.1.4.1.3.1 Program Description *4.1-11*
4.1.4.1.3.2 Program Version and Computer *4.1-11*
4.1.4.1.3.3 History of Use *4.1-11*
4.1.4.1.3.4 Extent of Application *4.1-11*
4.1.4.1.4 NOHEAT *4.1-11*
4.1.4.1.4.1 Program Description *4.1-11*

Chapter 4

REACTOR

TABLE OF CONTENTS (Continued)

Section — Page

4.1.4.1.4.2 Program Version and Computer *4.1-12*
4.1.4.1.4.3 History of Use *4.1-12*
4.1.4.1.4.4 Extent of Application *4.1-12*
4.1.4.1.5 FINITE *4.1-12*
4.1.4.1.5.1 Program Description *4.1-12*
4.1.4.1.5.2 Program Version and Computer *4.1-12*
4.1.4.1.5.3 History of Use *4.1-12*
4.1.4.1.5.4 Extent of Use *4.1-12*
4.1.4.1.6 DYSEA *4.1-12*
4.1.4.1.6.1 Program Description *4.1-12*
4.1.4.1.6.2 Program Version and Computer *4.1-13*
4.1.4.1.6.3 History of Use *4.1-13*
4.1.4.1.6.4 Extent of Application *4.1-13*
4.1.4.1.7 SHELL 5 ..... *4.1-13*
4.1.4.1.7.1 Program Description *4.1-13*
4.1.4.1.7.2 Program Version and Computer *4.1-13*
4.1.4.1.7.3 History of Use *4.1-14*
4.1.4.1.7.4 Extent of Application *4.1-14*
4.1.4.1.8 HEATER *4.1-14*
4.1.4.1.8.1 Program Description *4.1-14*
4.1.4.1.8.2 Program Version and Computer *4.1-14*
4.1.4.1.8.3 History of Use *4.1-14*
4.1.4.1.8.4 Extent of Application *4.1-14*
4.1.4.1.9 FAP-71 (Fatigue Analysis Program) *4.1-14*
4.1.4.1.9.1 Program Description *4.1-14*
4.1.4.1.9.2 Program Version and Computer *4.1-14*
4.1.4.1.9.3 History of Use *4.1-15*
4.1.4.1.9.4 Extent of Use *4.1-15*
4.1.4.1.10 CREEP/PLAST *4.1-15*
4.1.4.1.10.1 Program Description *4.1-15*
4.1.4.1.10.2 Program Version and Computer *4.1-15*
4.1.4.1.10.3 History of Use *4.1-15*
4.1.4.1.10.4 Extent of Application *4.1-15*
4.1.4.2 Fuel Rod Thermal Analysis 4.1-15
4.1.4.3 Reactor Systems Dynamics 4.1-15
4.1.4.4 Nuclear Engineering Analysis 4.1-16

Chapter 4

REACTOR

TABLE OF CONTENTS (Continued)

Section — Page

4.1.4.5 Neutron Fluence Calculations 4.1-16
4.1.4.6 Thermal Hydraulic Calculations 4.1-16
4.1.5 REFERENCES 4.1-16

4.2 FUEL SYSTEM DESIGN 4.2-1
4.2.1 DESIGN BASES 4.2-1
4.2.1.1 Fuel System Damage Limits 4.2-1
4.2.1.1.1 Stress/Strain Limits 4.2-1
4.2.1.1.2 Fatigue Limits 4.2-1
4.2.1.1.3 Fretting Wear Limits 4.2-1
4.2.1.1.4 Oxidation, Hydriding, and Corrosion Limits 4.2-1
4.2.1.1.5 Dimensional Change Limits 4.2-1
4.2.1.1.6 Internal Gas Pressure Limit 4.2-1
4.2.1.1.7 Hydraulic Loads Limits 4.2-2
4.2.1.1.8 Control Rod Reactivity Limits 4.2-2
4.2.1.2 Fuel Rod Failure Limits 4.2-2
4.2.1.2.1 Hydriding Limits 4.2-2
4.2.1.2.2 Cladding Collapse Limits 4.2-2
4.2.1.2.3 Fretting Wear Limits 4.2-2
4.2.1.2.4 Overheating of Cladding Limits 4.2-2
4.2.1.2.5 Overheating of Pellet Limits 4.2-2
4.2.1.2.6 Excessive Fuel Enthalpy Limits 4.2-2
4.2.1.2.7 Pellet-Cladding Interaction Limits 4.2-2
4.2.1.2.8 Bursting Limits 4.2-2
4.2.1.2.9 Mechanical Fracturing Limits 4.2-3
4.2.1.3 Fuel Coolability Limits 4.2-3
4.2.1.3.1 Cladding Embrittlement Limits 4.2-3
4.2.1.3.2 Violent Expulsion of Fuel Limits 4.2-3
4.2.1.3.3 Generalized Cladding Melt Limits 4.2-3
4.2.1.3.4 Fuel Rod Ballooning Limits 4.2-3
4.2.1.3.5 Structural Deformation Limits 4.2-3
4.2.2 DESCRIPTION AND DESIGN DRAWINGS 4.2-3
4.2.2.1 Control Rods 4.2-3
4.2.2.2 Velocity Limiter 4.2-5

Chapter 4

REACTOR

TABLE OF CONTENTS (Continued)

Section — Page

4.2.3 DESIGN EVALUATION 4.2-6
4.2.3.1 Fuel System Damage Evaluation 4.2-6
4.2.3.1.1 Stress/Strain Evaluation 4.2-6
4.2.3.1.2 Fatigue Evaluation 4.2-6
4.2.3.1.3 Fretting Wear Evaluation 4.2-6
4.2.3.1.4 Oxidation, Hydriding, and Corrosion Evaluation 4.2-6
4.2.3.1.5 Dimensional Change Evaluation 4.2-6
4.2.3.1.6 Internal Gas Pressure Evaluation 4.2-6
4.2.3.1.7 Hydraulic Load Evaluation 4.2-7
4.2.3.1.8 Control Rod Reactivity Evaluation 4.2-7
4.2.3.2 Fuel Rod Failure 4.2-7
4.2.3.2.1 Hydriding Evaluation 4.2-7
4.2.3.2.2 Cladding Collapse Evaluation 4.2-7
4.2.3.2.3 Fretting Wear Evaluation 4.2-7
4.2.3.2.4 Overheating of Cladding Evaluation 4.2-7
4.2.3.2.5 Overheating of Pellet Limits 4.2-7
4.2.3.2.6 Excessive Fuel Enthalpy Evaluation 4.2-7
4.2.3.2.7 Pellet-Cladding Interaction Evaluation 4.2-8
4.2.3.2.8 Bursting Evaluation 4.2-8
4.2.3.2.9 Mechanical Fracturing Evaluation 4.2-8
4.2.3.3 Fuel Coolability Evaluation 4.2-8
4.2.3.3.1 Cladding Embrittlement Evaluation 4.2-8
4.2.3.3.2 Violent Expulsion of Fuel Evaluation 4.2-8
4.2.3.3.3 Generalized Cladding Melt Evaluation 4.2-8
4.2.3.3.4 Fuel Rod Ballooning Evaluation 4.2-8
4.2.3.3.5 Structural Deformation Evaluation 4.2-9
4.2.4 TESTING, INSPECTION, AND SURVEILLANCE PLANS 4.2-9
4.2.4.1 Fuel Testing, Inspection, and Surveillance 4.2-9
4.2.4.2 Online Fuel System Monitoring 4.2-9
4.2.4.3 Post-Irradiation Surveillance 4.2-9
4.2.4.4 Channel Management Program 4.2-10
4.2.5 REFERENCES 4.2-11

4.3 NUCLEAR DESIGN 4.3-1
4.3.1 DESIGN BASES 4.3-1
4.3.1.1 Reactivity Basis 4.3-1

Chapter 4

REACTOR

TABLE OF CONTENTS (Continued)

Section — Page

4.3.1.2 Overpower Bases 4.3-1
4.3.2 DESCRIPTION 4.3-1
4.3.2.1 Nuclear Design Description 4.3-1
4.3.2.2 Power Distribution 4.3-1
4.3.2.2.1 Power Distribution Calculations 4.3-1
4.3.2.2.2 Power Distribution Measurements 4.3-1
4.3.2.2.3 Power Distribution Accuracy 4.3-1
4.3.2.2.4 Power Distribution Anomalies 4.3-1
4.3.2.3 Reactivity Coefficients 4.3-2
4.3.2.4 Control Requirements 4.3-2
4.3.2.4.1 Shutdown Reactivity 4.3-2
4.3.2.4.2 Reactivity Variations 4.3-2
4.3.2.5 Control Rod Patterns and Reactivity Worths 4.3-2
4.3.2.6 Criticality of Reactor During Refueling 4.3-3
4.3.2.7 Stability 4.3-3
4.3.2.7.1 Xenon Transients 4.3-3
4.3.2.7.2 Thermal Hydraulic Stability 4.3-3
4.3.2.8 Vessel Irradiations 4.3-3
4.3.3 ANALYTICAL METHODS 4.3-4
4.3.4 CHANGES 4.3-5
4.3.5 REFERENCES 4.3-5

4.4 THERMAL-HYDRAULIC DESIGN 4.4-1
4.4.1 DESIGN BASES 4.4-1
4.4.1.1 Safety Design Bases 4.4-1
4.4.1.2 Requirements for Steady-State Conditions 4.4-1
4.4.1.3 Requirements for Anticipated Operational Occurrences (AOOs) 4.4-1
4.4.1.4 Summary of Design Bases 4.4-1
4.4.2 DESCRIPTION OF THERMAL-HYDRAULIC DESIGN OF REACTOR CORE 4.4-1
4.4.2.1 Summary Comparison 4.4-1
4.4.2.2 Critical Power Ratio 4.4-2
4.4.2.3 Linear Heat Generation Rate 4.4-2

Chapter 4

REACTOR

TABLE OF CONTENTS (Continued)

Section — Page

4.4.2.4 Void Fraction Distribution 4.4-2
4.4.2.5 Core Coolant Flow Distribution and Orificing Pattern 4.4-2
4.4.2.5.1 Flow Distribution Data Comparison 4.4-2
4.4.2.5.2 Effect of Channel Flow Uncertainties on the MCPR Uncertainty 4.4-2
4.4.2.6 Core Pressure Drop and Hydraulic Loads 4.4-3
4.4.2.7 Correlation and Physical Data 4.4-3
4.4.2.8 Thermal Effects of Operational Transients 4.4-3
4.4.2.9 Uncertainties in Estimates 4.4-3
4.4.2.10 Flux Tilt Considerations 4.4-4
4.4.3 DESCRIPTION OF THE THERMAL AND HYDRAULIC DESIGN OF THE REACTOR COOLANT SYSTEM 4.4-4
4.4.3.1 Plant Configuration Data 4.4-4
4.4.3.1.1 Reactor Coolant System Configuration 4.4-4
4.4.3.1.2 Reactor Coolant System Thermal Hydraulic Data 4.4-4
4.4.3.1.3 Reactor Coolant System Geometric Data 4.4-4
4.4.3.2 Operating Restrictions on Pumps 4.4-4
4.4.3.3 Power-Flow Operating Map 4.4-5
4.4.3.3.1 Limits for Normal Operation 4.4-5
4.4.3.3.2 Regions of the Power-Flow Map 4.4-5
4.4.3.3.3 Design Features for Power-Flow Control 4.4-5
4.4.3.4 Temperature-Power Operating Map 4.4-7
4.4.3.5 Load-Following Characteristics 4.4-7
4.4.3.6 Thermal and Hydraulic Characteristics Summary Table 4.4-7
4.4.4 EVALUATION 4.4-7
4.4.4.1 Bypass Flow 4.4-7
4.4.4.2 Thermal Hydraulic Stability Analysis 4.4-7
4.4.5 TESTING AND VERIFICATION 4.4-8
4.4.6 INSTRUMENTATION REQUIREMENTS 4.4-8
4.4.6.1 Loose Parts 4.4-8
4.4.7 REFERENCES 4.4-8

4.5 REACTOR MATERIALS 4.5-1
4.5.1 CONTROL ROD SYSTEM STRUCTURAL MATERIALS 4.5-1
4.5.1.1 Material Specifications 4.5-1
4.5.1.2 Special Materials 4.5-3
4.5.1.3 Processes, Inspections and Tests 4.5-3

Chapter 4

REACTOR

TABLE OF CONTENTS (Continued)

Section — Page

4.5.1.4 Control of Delta Ferrite Content 4.5-4
4.5.1.5 Protection of Materials During Fabrication, Shipping, and Storage 4.5-4
4.5.2 REACTOR INTERNAL MATERIALS 4.5-5
4.5.2.1 Material Specifications 4.5-5
4.5.2.2 Controls on Welding 4.5-7
4.5.2.3 Nondestructive Examination of Wrought Seamless Tubular Products 4.5-7
4.5.2.4 Fabrication and Processing of Austenitic Stainless Steel - Regulatory Guide Conformance 4.5-8
4.5.2.5 Contamination, Protection, and Cleaning of Austenitic Stainless Steel 4.5-8
4.5.3 CONTROL ROD DRIVE HOUSING SUPPORTS 4.5-9

4.6 FUNCTIONAL DESIGN OF REACTIVITY CONTROL SYSTEMS 4.6-1
4.6.1 INFORMATION FOR THE CONTROL ROD DRIVE SYSTEM 4.6-1
4.6.1.1 Control Rod Drive System Design 4.6-1
4.6.1.1.1 Design Bases 4.6-1
4.6.1.1.1.1 Safety Design Bases 4.6-1
4.6.1.1.1.2 Power Generation Design Basis 4.6-1
4.6.1.1.2 Description 4.6-1
4.6.1.1.2.1 Control Rod Drive Mechanisms 4.6-2
4.6.1.1.2.2 Drive Components 4.6-3
4.6.1.1.2.2.1 Drive Piston 4.6-3
4.6.1.1.2.2.2 Index Tube 4.6-3
4.6.1.1.2.2.3 Collet Assembly 4.6-3
4.6.1.1.2.2.4 Piston Tube 4.6-4
4.6.1.1.2.2.5 Stop Piston 4.6-4
4.6.1.1.2.2.6 Flange and Cylinder Assembly 4.6-5
4.6.1.1.2.2.7 Lock Plug 4.6-5
4.6.1.1.2.3 Materials of Construction 4.6-5
4.6.1.1.2.3.1 Index Tube 4.6-6
4.6.1.1.2.3.2 Coupling Spud 4.6-6
4.6.1.1.2.3.3 Collet Fingers 4.6-6
4.6.1.1.2.3.4 Seals and Bushings 4.6-6
4.6.1.1.2.3.5 Summary 4.6-6
4.6.1.1.2.4 Control Rod Drive Hydraulic System 4.6-7
4.6.1.1.2.4.1 Hydraulic Requirements 4.6-7
4.6.1.1.2.4.2 System Description 4.6-8

Chapter 4

REACTOR

TABLE OF CONTENTS (Continued)

Section — Page

4.6.1.1.2.4.2.1 Supply Pump 4.6-8
4.6.1.1.2.4.2.2 Accumulator Charging Pressure 4.6-9
4.6.1.1.2.4.2.3 Drive Water Pressure 4.6-9
4.6.1.1.2.4.2.4 Cooling Water Header 4.6-10
4.6.1.1.2.4.2.5 Scram Discharge Volume 4.6-10
4.6.1.1.2.4.3 Hydraulic Control Units 4.6-11
4.6.1.1.2.4.3.1 Insert Drive Valve 4.6-12
4.6.1.1.2.4.3.2 Insert Exhaust Valve 4.6-12
4.6.1.1.2.4.3.3 Withdraw Drive Valve 4.6-12
4.6.1.1.2.4.3.4 Withdraw Exhaust Valve 4.6-12
4.6.1.1.2.4.3.5 Speed Control Units 4.6-12
4.6.1.1.2.4.3.6 Scram Pilot Valves 4.6-12
4.6.1.1.2.4.3.7 Scram Inlet Valve 4.6-12
4.6.1.1.2.4.3.8 Scram Exhaust Valve 4.6-12
4.6.1.1.2.4.3.9 Scram Accumulator 4.6-13
4.6.1.1.2.5 Control Rod Drive System Operation 4.6-13
4.6.1.1.2.5.1 Rod Insertion 4.6-13
4.6.1.1.2.5.2 Rod Withdrawal 4.6-13
4.6.1.1.2.5.3 Scram 4.6-14
4.6.1.1.2.6 Instrumentation 4.6-15
4.6.1.2 Control Rod Drive Housing Supports 4.6-15
4.6.1.2.1 Safety Objective 4.6-15
4.6.1.2.2 Safety Design Bases 4.6-15
4.6.1.2.3 Description 4.6-15
4.6.2 EVALUATION OF THE CONTROL ROD DRIVES 4.6-16
4.6.2.1 Control Rods 4.6-17
4.6.2.1.1 Materials Adequacy Throughout Design Lifetime 4.6-17
4.6.2.1.2 Dimensional and Tolerance Analysis 4.6-17
4.6.2.1.3 Thermal Analysis of the Tendency to Warp 4.6-17
4.6.2.1.4 Forces for Expulsion 4.6-17
4.6.2.1.5 Functional Failure of Critical Components 4.6-18
4.6.2.1.6 Precluding Excessive Rates of Reactivity Addition 4.6-18
4.6.2.1.7 Effect of Fuel Rod Failure on Control Rod Channel Clearances 4.6-18
4.6.2.1.8 Mechanical Damage 4.6-18
4.6.2.1.9 Evaluation of Control Rod Velocity Limiter 4.6-19
4.6.2.2 Control Rod Drives 4.6-19

Chapter 4

REACTOR

TABLE OF CONTENTS (Continued)

Section — Page

4.6.2.2.1 Evaluation of Scram Time ... 4.6-19
4.6.2.2.2 Analysis of Malfunction Relating to Rod Withdrawal ... 4.6-19
4.6.2.2.2.1 Drive Housing Fails at Attachment Weld ... 4.6-19
4.6.2.2.2.2 Rupture of Hydraulic Line(s) to Drive Housing Flange ... 4.6-20
4.6.2.2.2.2.1 Pressure-Under Line Break ... 4.6-20
4.6.2.2.2.2.2 Pressure-Over Line Break ... 4.6-20
4.6.2.2.2.2.3 Simultaneous Breakage of the Pressure-Over and Pressure-Under Lines ... 4.6-21
4.6.2.2.2.3 All Drive Flange Bolts Fail in Tension ... 4.6-21
4.6.2.2.2.4 Weld Joining Flange to Housing Fails in Tension ... 4.6-22
4.6.2.2.2.5 Housing Wall Ruptures ... 4.6-23
4.6.2.2.2.6 Flange Plug Blows Out ... 4.6-23
4.6.2.2.2.7 Ball Check Valve Plug Blows Out ... 4.6-24
4.6.2.2.2.8 Drive/Cooling Water Pressure Control Valve Failure ... 4.6-24
4.6.2.2.2.9 Ball Check Valve Fails to Close Passage to Vessel Ports ... 4.6-25
4.6.2.2.2.10 Hydraulic Control Unit Valve Failures ... 4.6-25
4.6.2.2.2.11 Collet Fingers Fail to Latch ... 4.6-26
4.6.2.2.2.12 Withdrawal Speed Control Valve Failure ... 4.6-26
4.6.2.2.2.13 Slow or Partial Loss of Air to the Scram Discharge Valves ... 4.6-26
4.6.2.2.3 Scram Reliability ... 4.6-27
4.6.2.2.4 Control Rod Support and Operation ... 4.6-27
4.6.2.3 Control Rod Drive Housing Supports ... 4.6-27
4.6.3 TESTING AND VERIFICATION OF THE CONTROL ROD DRIVES ... 4.6-28
4.6.3.1 Control Rod Drives ... 4.6-28
4.6.3.1.1 Testing and Inspection ... 4.6-28
4.6.3.1.1.1 Development Tests ... 4.6-28
4.6.3.1.1.2 Factory Quality Control Tests ... 4.6-28
4.6.3.1.1.3 Operational Tests ... 4.6-29
4.6.3.1.1.4 Acceptance Tests ... 4.6-30
4.6.3.1.1.5 Surveillance Tests ... 4.6-30
4.6.3.1.1.6 Functional Tests ... 4.6-31
4.6.3.2 Control Rod Drive Housing Supports ... 4.6-32
4.6.4 INFORMATION FOR COMBINED PERFORMANCE OF REACTIVITY CONTROL SYSTEMS ... 4.6-32
4.6.4.1 Vulnerability to Common Mode Failures ... 4.6-32
4.6.4.2 Accidents Taking Credit for Multiple Reactivity Systems ... 4.6-33

Chapter 4

REACTOR

TABLE OF CONTENTS (Continued)

Section Page

4.6.5 EVALUATION OF COMBINED PERFORMANCE..... 4.6-33
4.6.6 ALTERNATE ROD INSERTION SYSTEM..... 4.6-33
4.6.6.1 System Description..... 4.6-33
4.6.6.2 Alternate Rod Insertion Redundancy..... 4.6-34
4.6.7 REFERENCES..... 4.6-34

Chapter 4

REACTOR

LIST OF TABLES

Number	Title	Page
4.2-1	Control Rod Parameters	4.2-15
4.3-1	Key Flux and Fluence Results	4.3-7
4.3-2	Deleted	
4.3-3	Neutronic Design Values	4.3-9
4.4-1	Thermal and Hydraulic Design Characteristics of the Reactor Core	4.4-11
4.4-2	Deleted	
4.4-3	Reactor Coolant System Geometric Data	4.4-13
4.4-4	Lengths and Sizes of Safety Injection Lines	4.4-14
4.4-5	Deleted	

Chapter 4

REACTOR

LIST OF FIGURES

Number	Title
4.1-1	Steam Separator
4.1-2	Steam Dryer Panel
4.1-3	Columbia Generating Station Cycle 19 Reference Loading Map
4.2-1.1	Original Equipment (OEM) Control Rod Blade Assembly
4.2-1.2	Duralife 215 Control Rod Blade Assembly
4.2-1.3	Marathon Control Rod Blade Assembly
4.2-1.4	Marathon Control Rod Blade Absorber Details
4.2-1.5	Marathon Control Rod Blade Absorber Placement
4.2-2	Control Rod Velocity Limiter
4.3-1	Core Layout and Vessel Internal Components
4.4-1	Power-Flow Operating Map, Two Loop Operation
4.4-2	Power-Flow Operating Map, Single Loop Operation
4.6-1	Control Rod to Control Rod Drive Coupling
4.6-2	Control Rod Drive Unit
4.6-3	Control Rod Drive Unit (Schematic)
4.6-4	Model 7RDB144B or C Control Rod Drive (Breakdown)
4.6-5	Control Rod Drive Hydraulic System (Sheets 1 and 2)
4.6-6	Control Rod Drive System Process Diagram (Sheets 1 through 3)

Chapter 4

REACTOR

LIST OF FIGURES (Continued)

Number	Title
4.6-7	Control Rod Drive Hydraulic Control Unit
4.6-8	Control Rod Drive Housing Support

Chapter 4

REACTOR

4.1 SUMMARY DESCRIPTION

This section was prepared using the licensing topical report, "General Electric Standard Application for Reactor Fuel" (GESTAR II) Reference 4.1-1, GESTAR II compliance document (Reference 4.1-4), the cycle-specific design report (Reference 4.1-2) and the "Fuel Bundle Information Report" (Reference 4.1-3).

The reactor assembly consists of the reactor vessel, internal components of the core, shroud, steam separator and dryer assemblies, and jet pumps. Also included in the reactor assembly are the control rods, control rod drive housings, and the control rod drives. Figure 5.3-5 shows the arrangement of reactor assembly components. A summary of the important design and performance characteristics is given in Section 1.3. Loading conditions for reactor assembly components are specified in Section 3.9. The core load varies for each cycle and is shown in Reference 4.1-2.

4.1.1 REACTOR VESSEL

The reactor vessel design and description are discussed in Section 5.3.

4.1.2 REACTOR INTERNAL COMPONENTS

The major reactor internal components are the core (fuel, channels, control blades, and instrumentation), the core support structure (including the shroud, top guide and core plate), the shroud head and steam separator assembly, the steam dryer assembly, the feedwater spargers, the core spray spargers, and the jet pumps. Except for the Zircaloy and NSF (Niobium-Sn-Fe) in the reactor core, these reactor internals are stainless steel or other corrosion resistant alloys. All major internal components of the vessel can be removed except the jet pump diffusers, the jet pump risers, the shroud, the core spray lines, spargers, and the feedwater sparger. The removal of the steam dryers, shroud head and steam separators, fuel assemblies, in-core assemblies, control rods, orificed fuel supports, and control rod guide tubes can be accomplished on a routine basis.

4.1.2.1 Reactor Core

4.1.2.1.1 General

The reactor core is composed of fuel assemblies manufactured by Global Nuclear Fuel (GNF).

A number of important features of the BWR core design are summarized in the following paragraphs:

a. The BWR core mechanical design is based on conservative application of stress limits, operating experience, and experimental test results. The moderate pressure levels characteristics of a direct cycle reactor (approximately 1035 psia) result in moderate cladding temperatures and stress levels;

b. The low coolant saturation temperature, high heat transfer coefficients, and neutral water chemistry of the BWR are significant, advantageous factors in minimizing Zircaloy temperature and associated temperature-dependent corrosion and hydride buildup;

The relatively uniform fuel cladding temperatures throughout the core minimize migration of the hydrides to cold cladding zones and reduce thermal stresses;

c. The basic thermal and mechanical criteria applied in the design have been proven by irradiation of statistically significant quantities of fuel. The design heat transfer rates and linear heat generation rates are similar to values proven in fuel assembly irradiation;

d. The design power distribution used in sizing the core represents a worst expected state of operation;

e. The thermal margin analyses ensure that more than 99.9% of the fuel rods in the core are expected to avoid boiling transition for the most severe anticipated operational occurrences described in Chapter 15. The possibility of boiling transition occurring during normal reactor operation is insignificant; and

f. Because of the large negative moderator density coefficient of reactivity, the BWR has a number of inherent advantages. These are the uses of coolant flow for load following, the inherent self-flattening of the radial power distribution, the ease of control, the spatial xenon stability, and the ability to override xenon to follow load.

Boiling water reactors do not usually have instability problems due to xenon. This has been demonstrated by special tests which were conducted on operating BWRs and by calculations. Xenon transients are highly damped in a BWR due to the large negative power coefficient of reactivity (Reference 4.1-7).

Columbia Generating Station (CGS) has installed a stability detect and suppress system to ensure hydrodynamic stability while operating in regions susceptible to instability. Stability system limits are specified in the Technical Specifications and in the Core Operating Limits Report.

Important features of the reactor core arrangement are as follows:

a. The original bottom-entry cruciform control rods consist of B_4C in stainless steel tubes surrounded by a stainless steel sheath;

b. The bottom-entry cruciform Duralife 215 control rods consist of 18 high-purity stainless steel tubes at each wing filled with boron-carbide and three hafnium rods at the edge of each wing and a hafnium plate at the top;

c. The bottom-entry cruciform Marathon control rods consist of 17 high-purity stainless steel tubes in each wing. Eleven of the tubes are filled with boron-carbide, two of the tubes are partially filled with boron-carbide and four tubes are filled with hafnium rods (three at the outer edge of each wing and one at the center of the wing). See Figure 4.2-1.5 for details;

d. The in-core location of the startup and power range instruments provides coverage of the large reactor core and provides an acceptable signal-to-noise ratio and neutron-to-gamma ratio. All in-core instrument leads enter from the bottom and the instruments are in service during refueling. In-core instrumentation is further discussed in Sections 7.6.1.4 and 7.7.1.6;

e. As shown by experience obtained at other plants, the operator, utilizing the in-core flux monitor system, can maintain the desired power distribution within a large core by proper control rod scheduling;

f. The Zircaloy-4 and NSF channels provide a fixed flow path for the boiling coolant, serve as a guiding surface for the control rods, and protect the fuel during handling operations;

g. The mechanical reactivity control permits criticality checks during refueling and provides maximum plant safety. The core is designed to be subcritical at any time in its operating history with any one control rod fully withdrawn; and

h. The selected control rod pitch represents a practical value of individual control rod reactivity worth and allows ample clearance below the pressure vessel between control rod drive mechanisms for ease of maintenance and removal.

4.1.2.1.2 Core Configuration

The reactor core is arranged as an upright circular cylinder containing a large number of fuel cells and is located within the reactor vessel. The coolant flows upward through the core. The BWR core is composed of essentially two components: fuel assemblies and control rods. The General Electric Company (GE) control rod mechanical configuration (see Figure 4.2-1) is basically the same as used in all GE BWRs.

4.1.2.1.3 Fuel Assembly Description

The GNF reload fuel assemblies are GNF2 (Reference 4.1-4).

4.1.2.1.3.1 Fuel Rod. A fuel rod consists of UO_2 pellets and a Zircaloy-2 cladding tube. A fuel rod is made by stacking pellets into a Zircaloy-2 cladding tube, which is sealed by welding Zircaloy end plugs in each end of the tube. The GNF fuel rods are pressurized to 10 atmospheres (Reference 4.1-4).

The BWR fuel rod is designed as a pressure vessel. The ASME Boiler and Pressure Vessel (B&PV) Code, Section III, is used as a guide in the mechanical design and stress analysis of the fuel rod.

The rod is designed to withstand the applied loads, both external and internal. The fuel pellet is sized to provide sufficient volume within the fuel tube to accommodate differential expansion between fuel and clad. Overall fuel rod design is conservative in its accommodation of the mechanisms affecting fuel in a BWR environment. Fuel rod design bases are discussed in more detail in Section 4.2.1.

4.1.2.1.3.2 Fuel Bundle. The fuel bundle has two important design features:

a. The bundle design places minimum external forces on a fuel rod; each fuel rod is free to expand in the axial direction, and

b. The unique structural design permits the removal and replacement, if required, of individual fuel rods.

The fuel bundles are designed to meet all the criteria for core performance and to provide ease of handling. Selected fuel rods in each bundle differ from the others in uranium enrichment. This arrangement produces more uniform power production across the fuel bundle and thus allows a significant reduction in the amount of heat transfer surface required to satisfy the design thermal limitations.

The GNF reload bundle contains 92 fuel rods and 2 large central water rods, all in a 10 x 10 array.

4.1.2.1.4 Assembly Support and Control Rod Location

Some peripheral fuel assemblies are supported by the core plate. Otherwise, individual fuel assemblies in the core rest on fuel support pieces mounted on top of the control rod guide tubes. Each guide tube, with its fuel support piece, bears the weight of four assemblies and is supported by a control rod drive penetration nozzle in the bottom head of the reactor vessel. The core plate provides lateral support and guidance at the top of each control rod guide tube.

The top guide, mounted inside the shroud, provides lateral support and guidance for each fuel assembly. The reactivity of the core is controlled by cruciform control rods and their associated mechanical hydraulic drive system. The control rods occupy alternate spaces between fuel assemblies. Each independent drive enters the core from the bottom and can accurately position its associated control rod during normal operation and yet insert the control rod in less than 7 sec during the scram mode of operation. Bottom entry allows optimum power shaping in the core, ease of refueling, and convenient drive maintenance.

4.1.2.2 Shroud

The shroud is a cylindrical, stainless-steel structure which surrounds the core and provides a barrier to separate the upward flow through the core from the downward flow in the annulus and also provides a floodable volume in the unlikely event of an accident which would otherwise drain the reactor pressure vessel. A flange at the top of the shroud mates with a flange on the shroud head and steam separators. The upper cylindrical wall of the shroud and the shroud head form the core discharge plenum. The jet pump discharge diffusers penetrate the shroud support below the core elevation to introduce the coolant to the inlet plenum. To prevent direct flow from the inlet to the outlet nozzles of the recirculation loops, the shroud support is welded to the vessel wall. The shroud support is designed to support and locate the jet pumps, core support structure, and some peripheral fuel assemblies.

Mounted inside the upper shroud cylinder in the space between the top of the core and the upper shroud flange are the core spray spargers with spray nozzles for injection of cooling

water. The core spray spargers and nozzles do not interfere with the installation or removal of fuel from the core.

4.1.2.3 Shroud Head and Steam Separators

The shroud head consists of a flange and dome onto which is welded an array of standpipes, with a steam separator located at the top of each standpipe. The shroud head mounts on the flange at the top of the cylinder and forms the cover of the core discharge plenum region. The joint between the shroud head and shroud flange does not require a gasket or other replacement sealing technique. The fixed axial flow type steam separators have no moving parts and are made of stainless steel.

In each separator, the steam-water mixture rising from the standpipe impinges on vanes which give the mixture a spin to establish a vortex wherein the centrifugal forces separate the steam from the water. Steam leaves the separator at the top and passes into the wet steam plenum below the dryer. The separated water exits from the lower end of the separator and enters the pool that surrounds the standpipes to enter the downcomer annulus. An internal steam separator diagram is shown in Figure 4.1-1.

For ease of removal, the shroud head is bolted to the shroud top flange by long shroud head bolts that extend above the separators for easy access during refueling. The shroud head is guided into position on the shroud via guide rods on the inside of the vessel and locating pins located on the shroud head. The objective of the shroud head bolt design is to provide direct access to the bolts during reactor refueling operations with minimum-depth underwater tool manipulation during the removal and installation of the assemblies.

4.1.2.4 Steam Dryer Assembly

The steam dryer assembly is mounted in the reactor vessel above the shroud head and forms the top and sides of the wet steam plenum. Vertical guide rods on the inside of the vessel provide alignment for the dryer assembly during installation. The dryer assembly is supported by pads extending from the vessel wall and is locked into position during operation by the reactor vessel top head. Steam from the separators flows upward into the dryer assembly. The steam leaving the top of the dryer assembly flows into vessel steam outlet nozzles which are located alongside the steam dryer assembly. Moisture is removed by the dryer vanes and flows first through a system of troughs and pipes to the pool surrounding the separators and then into the downcomer annulus between the core shroud and reactor vessel wall. The diagram of a typical steam dryer panel is shown in Figure 4.1-2.

4.1.3 REACTIVITY CONTROL SYSTEMS

4.1.3.1 Operation

The control rods perform dual functions of power distribution shaping and reactivity control. Power distribution in the core is controlled during operation of the reactor by manipulation of selected patterns of rods. The rods, which enter from the bottom of the near-cylindrical reactor core, are positioned in such a manner to counter-balance steam voids in the top of the core and effect significant power flattening.

These groups of control elements, used for power flattening, experience a somewhat higher duty cycle and neutron exposure than the other rods in the control system.

The reactivity control function requires that all rods be available for either reactor "scram" (prompt shutdown) or reactivity regulation. Because of this, the control elements are mechanically designed to withstand the dynamic forces resulting from a scram. They are connected to bottom-mounted, hydraulically actuated drive mechanisms which allow either axial positioning for reactivity regulation or rapid scram insertion. The design of the rod-to-drive connection permits each blade to be attached or detached from its drive without disturbing the remainder of the control system. The bottom-mounted drives permit the entire control system to be left intact and operable for tests with the reactor vessel open.

4.1.3.2 Description of Rods

The cruciform shaped control rods contain 76 stainless steel tubes (19 tubes in each wing of the cruciform) filled with vibration compacted boron-carbide powder. The tubes are seal welded with end plugs on either end. Stainless steel balls are used to separate the tubes into individual compartments. The stainless steel balls are held in position by a slight crimp in the tube. The individual tubes act as pressure vessels to contain the helium gas released by the boron-neutron capture reaction.

The tubes are held in a cruciform array by a stainless steel sheath extending the full length of the tubes. A top handle, shown in Figure 4.2-1, aligns the tubes and provides structural rigidity at the top of the control rod. Rollers, housed in the handle, provide guidance for control rod insertion and withdrawal. A bottom casting is also used to provide structural rigidity and contains positioning rollers and a parachute-shaped velocity limiter. The handle and lower casting are welded into a single structure by means of a small cruciform post located in the center of the control rod. A steel stiffener is located approximately at the midspan of each cruciform wing. The control rods can be positioned at 6-in. steps and have a nominal withdrawal and insertion speed of 3 in./sec.

The foregoing description of the control rods applies to the design of the original control rods. There have been two different replacement control rods used, Duralife 215 and Marathon

control rods. These replacement rods have design changes that increase the neutron absorption and make other material property improvements. The newer control rods are similar to and are fully interchangeable with the original control rod assemblies and are compatible with the existing nuclear steam supply system hardware.

The Duralife 215 control rods differ from the previous control rods in that a hafnium absorber plate is used at the top of each cruciform section, hafnium absorber rods replace several of the boron carbide absorber rods on the periphery of each cruciform section, and the stainless steel stiffener is removed from each wing. There are 21 absorber rods in each wing, of which 18 are stainless-steel tubes containing boron carbide and three are hafnium rods. The outside diameter remains the same. The length of the absorber column in these rods has been reduced from 143 in. to 137 in. to accommodate the top 6-in.-high hafnium plate. The increased volume of neutron absorber material increases the relative reactivity worth in the cold condition and increases the nuclear lifetime.

The Marathon control rod blades are an improved version of the Duralife 215 control blades and have the absorber and sheath arrangement replaced with an array of square tubes, which results in reduced weight and increased absorber volume. The square tubes each have four lobes to allow adjacent tubes to be welded to each other. The absorber tubes are welded lengthwise to form the four wings of the control rod. Each wing is comprised of 17 absorber tubes. The absorber tubes each act as an individual pressure chamber for the retention of helium. The region between each pair of square tubes is filled with helium and sealed top and bottom by welding. The four wings are then welded to the tie rod to form the cruciform-shaped member of the control rod. The Marathon control rod blade has the full-length tie rod replaced with a segmented tie rod, which also reduces weight.

The square tubes are circular inside and are loaded with either B_4C or hafnium. The B_4C is contained in separate capsules to prevent its migration. The capsules are placed inside the square absorber tubes and are smaller than the absorber tube inside diameter, allowing the B_4C to swell before making contact with the absorber tubes thereby increasing stress corrosion resistance. Empty tubes may be used adjacent to the tie rods to achieve the desired reactivity worth. The combination of absorbers and absorber tubes is based on the needed initial reactivity worth. In addition, empty capsules are used in some absorber tubes to provide a plenum for helium released during B_4C burnup.

The velocity limiter, shown in Figure 4.2-2, is a device which is an integral part of the control rod and protects against the low probability of a rod drop accident. It is designed to limit the free fall velocity and reactivity insertion rate of a control rod so that minimum fuel damage would occur. It is a one-way device, in that control rod scram time is not significantly affected.

Control rods are cooled by the core leakage (bypass) flow. The core leakage flow is made of recirculation flow that leaks through the several leakage flow paths, which are as follows:

a. The area between fuel channel and fuel assembly nosepiece,

b. The area between fuel assembly nosepiece and fuel support piece,

c. Holes in the lower tie plate,

d. The area between fuel support piece and core plate,

e. The area between core plate and shroud,

f. Holes in the core plate near power range monitor instrument guide tubes,

g. Various leakage paths around the control rod guide tubes, and

h. Control rod drive cooling water.

4.1.3.3 Supplementary Reactivity Control

Supplemental reactivity control is achieved with burnable poison. The supplementary burnable poison is gadolinia (Gd_2O_3) mixed with UO_2 in selected fuel rods in each fuel bundle.

4.1.4 ANALYSIS TECHNIQUES

4.1.4.1 Reactor Internal Components

Computer codes used for the analysis of the internal components as a basis for the original operating license are listed as follows:

a. MASS
b. SNAP (MULTISHELL)
c. GASP
d. NOHEAT
e. FINITE
f. DYSEA
g. SHELL 5
h. HEATER
i. FAP-71
j. CREEP-PLAST

The following italicized detailed descriptions of these programs are historical and were provided to support the application for an operating license.

4.1.4.1.1 MASS (Mechanical Analysis of Space Structure)

4.1.4.1.1.1 Program Description. This is a proprietary program of GE and is an outgrowth of the PAPA (Plate and Panel Analysis) program originally developed by L. Beitch in the early 1960s. The program is based on the principle of the finite element method. Governing matrix equations are formed in terms of joint displacements using a "stiffness-influence-coefficient" concept originally proposed by L. Beitch (Reference 4.1-9). The program offers curved beam, plate, and shell elements. It can handle mechanical and thermal loads in a static analysis and predict natural frequencies and mode shapes in a dynamic analysis.

4.1.4.1.1.2 Program Version and Computer. The Nuclear Energy Division is using a past revision of MASS. This revision is identified as revision "0" in the computer production library. The program operates on the Honeywell 6000 computer.

4.1.4.1.1.3 History of Use. Since its development in the early 1960s, the program has been successfully applied to a wide variety of jet-engine structural problems, many of which involve extremely complex geometries. The use of the program in the Nuclear Energy Division also started shortly after its development.

4.1.4.1.1.4 Extent of Application. Besides the Jet Engine and Nuclear Energy Divisions, the Missile and Space Division, the Appliance Division, and the Turbine Division of GE have also applied the program to a wide range of engineering problems. The Nuclear Energy Division uses it mainly for piping and reactor internals analyses.

4.1.4.1.2 SNAP (MULTISHELL)

4.1.4.1.2.1 Program Description. The SNAP Program, which is also called MULTISHELL, is the GE code which determines the loads, deformations, and stresses of axisymmetric shells of revolution (cylinders, cones, discs, toroids, and rings) for axisymmetric thermal boundary and surface load conditions. Thin shell theory is inherent in the solution of E. Peissner's differential equations for each shell's influence coefficients. Surface loading capability includes pressure, average temperature, and liner through wall temperature gradients; the latter two may be linearly varied over the shell meridian. The theoretical limitations of this program are the same as those of classical theory.

4.1.4.1.2.2 Program Version and Computer. The current version maintained by the GE Jet Engine Division at Evandale, Ohio, is being used on the Honeywell 6000 computer in GE/NED.

4.1.4.1.2.3 History of Use. The initial version of the Shell Analysis Program was completed by the Jet Engine Division in 1961. Since then, a considerable amount of modification and addition has been made to accommodate its broadening area of application. Its application in the Nuclear Energy Division has a history longer than 10 years.

4.1.4.1.2.4 Extent of Application. The program has been used to analyze jet engine, space vehicle and nuclear reactor components. Because of its efficiency and economy, in addition to reliability, it has been one of the main shell analysis programs in the Nuclear Energy Division of GE.

4.1.4.1.3 GASP

4.1.4.1.3.1 Program Description. GASP is a finite element program for the stress analysis of axisymmetric or plane two-dimensional geometries. The element representations can be either quadrilateral or triangular. Axisymmetric or plane structural loads can be input at nodal points. Displacements, temperatures, pressure loads, and axial inertia can be accommodated. Effective plastic stress and strain distributions can be calculated using a bilinear stress-strain relationship by means of an iterative convergence procedure.

4.1.4.1.3.2 Program Version and Computer. The GE version, originally from the developer, Professor E. L. Wilson, operates on the Honeywell 6000 computer.

4.1.4.1.3.3 History of Use. The program was developed by Professor E. L. Wilson in 1965 (Reference 4.1-10). The present version in GE/NED has been in operation since 1967.

4.1.4.1.3.4 Extent of Application. The application of GASP in GE/NED is mainly for elastic analysis of axisymmetric and plane structures under thermal and pressure loads. The GE version has been extensively tested and used by engineers in the company.

4.1.4.1.4 NOHEAT

4.1.4.1.4.1 Program Description. The NOHEAT program is a two-dimensional and axisymmetric transient nonlinear temperature analysis program. An unconditionally stable numerical integration scheme is combined with iteration procedure to compute temperature distribution within the body subjected to arbitrary time- and temperature-dependent boundary conditions.

This program utilizes the finite element method. Included in the analysis are the three basic forms of heat transfer, conduction, radiation, and convection, as well as internal heat generation. In addition, cooling pipe boundary conditions are also treated. The output includes temperature histories of all the nodal points established by the user. The program can handle multitransient temperature input.

4.1.4.1.4.2 Program Version and Computer. The current version of the program is an improvement of the program originally developed by I. Farhoomand and Professor E. L. Wilson of University of California at Berkeley (Reference 4.1-11). The program operates on the Honeywell 6000 computer.

4.1.4.1.4.3 History of Use. The program was developed in 1971 and installed in GE Honeywell computer by one of its original developers, I. Farhoomand, in 1972. A number of heat transfer problems related to the reactor pedestal have been satisfactorily solved using the program.

4.1.4.1.4.4 Extent of Application. The program using finite element formulation is compatible with the finite element stress-analysis computer program GASP. Such compatibility simplified the connection of the two analyses and minimizes human error.

4.1.4.1.5 FINITE

4.1.4.1.5.1 Program Description. FINITE is a general-purpose finite element computer program for elastic stress analysis of two-dimensional structural problems including (1) plane stress, (2) plane strain, and (3) axisymmetric structures. It has provisions for thermal, mechanical, and body force loads. The materials of the structure may be homogeneous or inhomogeneous and isotropic or orthotropic. The development of the FINITE program is based on the GASP program (see Section 4.1.4.1.3).

4.1.4.1.5.2 Program Version and Computer. The present version of the program at GE/NED was obtained from the developer J. E. McConnelee of GE/Gas Turbine Department in 1969 (Reference 4.1-12). The NED version is used on the Honeywell 6000 computer.

4.1.4.1.5.3 History of Use. Since its completion in 1969, the program has been widely used in the Gas Turbine and the Jet Engine Departments of the GE for the analysis of turbine components.

4.1.4.1.5.4 Extent of Use. The program is used at GE/NED in the analysis of axisymmetric or nearly-axisymmetric BWR internals.

4.1.4.1.6 DYSEA

4.1.4.1.6.1 Program Description. The DYSEA (Dynamic and Seismic Analysis) program is a GE proprietary program developed specifically for seismic and dynamic analysis of RPV and internals/building system. It calculates the dynamic response of linear structural system by either temporal modal superposition or response spectrum method. Fluid-structure interaction effect in the RPV is taken into account by way of hydrodynamic mass.

Program DYSEA was based on program SAPIV with added capability to handle the hydrodynamic mass effect. Structural stiffness and mass matrices are formulated similar to SAPIV. Solution is obtained in time domain by calculating the dynamic response mode-by-mode. Time integration is performed by using Newmark's β-method. Response spectrum solution is also available as an option.

4.1.4.1.6.2 Program Version and Computer. The DYSEA version now operating on the Honeywell 6000 computer of GE, Nuclear Energy Systems Division, was developed at GE by modifying the SAPIV program. Capability was added to handle the hydrodynamic mass effect due to fluid-structure interaction in the reactor. It can handle three-dimensional dynamic problems with beam, trusses, and springs. Both acceleration time histories and response spectra may be used as input.

4.1.4.1.6.3 History of Use. The DYSEA program was developed in the Summer of 1976. It has been adopted as a standard production program since 1977 and it has been used extensively in all dynamic and seismic analysis of the RPV and internals/building system.

4.1.4.1.6.4 Extent of Application. The current version of DYSEA has been used in all dynamic and seismic analysis since its development. Results from test problems were found to be in close agreement with those obtained from either verified programs or analytic solutions.

4.1.4.1.7 SHELL 5

4.1.4.1.7.1 Program Description. SHELL 5 is a finite shell element program used to analyze smoothly curved thin shell structures with any distribution of elastic material properties, boundary constraints, and mechanical thermal and displacement loading conditions. The basic element is a triangle whose membrane displacement fields are linear polynomial functions, and whose bending displacement field is a cubic polynomial function (Reference 4.1-13).
Five degrees of freedom (three displacements and two bending rotations) are obtained at each nodal point. Output displacements and stresses are in a local (tangent) surface coordinate system.

Due to the approximation of element membrane displacements by linear functions, the in-plane rotation about the surface normal is neglected. Therefore, the only rotations considered are due to bending of the shell cross section and application of the method is not recommended for shell intersection (or discontinuous surface) problems where in-plane rotation can be significant.

4.1.4.1.7.2 Program Version and Computer. A copy of the source deck of SHELL 5 is maintained by GE/NED by Y. R. Rashid, one of the originators of the program. SHELL 5 operates on the UNIVAC 1108 computer.

4.1.4.1.7.3 History of Use. SHELL 5 is a program developed by Gulf General Atomic Incorporated (Reference 4.1-14) in 1969. The program has been in production status at Gulf General Atomic, GE, and at other major computer operating systems since 1970.

4.1.4.1.7.4 Extent of Application. SHELL 5 has been used at GE to analyze reactor shroud support and torus. Satisfactory results were obtained.

4.1.4.1.8 HEATER

4.1.4.1.8.1 Program Description. HEATER is a computer program used in the hydraulic design of feedwater spargers and their associated delivery header and piping. The program utilizes test data obtained by GE using full scale mockups of feedwater spargers combined with a series of models which represents the complex mixing processes obtained in the upper plenum, downcomer, and lower plenum. Mass and energy balances throughout the nuclear steam supply system are modeled in detail (Reference 4.1-15).

4.1.4.1.8.2 Program Version and Computer. This program was developed at GE/NED in FORTRAN IV for the Honeywell 6000 computer.

4.1.4.1.8.3 History of Use. The program was developed by various individuals in GE/NED beginning in 1970. The present version of the program has been in operation since January 1972.

4.1.4.1.8.4 Extent of Application. The program is used in the hydraulic design of the feedwater spargers for each BWR plant, in the evaluation of design modifications, and the evaluation of unusual operational conditions.

4.1.4.1.9 FAP-71 (Fatigue Analysis Program)

4.1.4.1.9.1 Program Description. The FAP-71 computer code, or Fatigue Analysis Program, is a stress analysis tool used to aid in performing ASME-III Nuclear Vessel Code structural design calculations. Specifically, FAP-71 is used in determining the primary plus secondary stress range and number of allowable fatigue cycles at points of interest. For structural locations at which the $3S_m$ (P+Q) ASME Code limit is exceeded, the program can perform either (or both) of two elastic-plastic fatigue life evaluations: 1) the method reported in ASME Paper 68-PVP-3, 2) the present method documented in Paragraph NB-3228.3 of the 1971 Edition of the ASME Section III Nuclear Vessel Code. The Program can accommodate up to 25 transient stress states on as many as 20 structural locations.

4.1.4.1.9.2 Program Version and Computer. The present version of FAP-71 was completed by L. Young of GE/NED in 1971 (Reference 4.1-16). The program currently is on the NED Honeywell 6000 computer.

4.1.4.1.9.3 History of Use. Since its completion in 1971, the program has been applied to several design analyses of GE BWR vessels.

4.1.4.1.9.4 Extent of Use. The program is used in conjunction with several shell analysis programs in determining the fatigue life of BWR mechanical components subject to thermal transients.

4.1.4.1.10 CREEP/PLAST

4.1.4.1.10.1 Program Description. A finite element program is used for the analysis of two-dimensional (plane and axisymmetric) problems under conditions of creep and plasticity. The creep formulation is based on the memory theory of creep in which the constitutive relations are cast in the form of hereditary integrals. The material creep properties are built into the program and they represent annealed 304 stainless steel. Any other creep properties can be included if required.

The plasticity treatment is based on kinemetic hardening and von Mises yield criterion. The hardening modulus can be constant or a function of strain.

4.1.4.1.10.2 Program Version and Computer. The program can be used for elastic-plastic analysis with or without the presence of creep. It can also be used for creep analysis without the presence of instantaneous plasticity. A detailed description of theory is given in Reference 4.1-17. The program is operative on UNIVAC-1108.

4.1.4.1.10.3 History of Use. This program was developed by Y. R. Rashid (Reference 4.1-17) in 1971. It underwent extensive program testing before it was put on production status.

4.1.4.1.10.4 Extent of Application. The program is used at GE/NED in the channel cross section mechanical analysis.

4.1.4.2 Fuel Rod Thermal Analysis

Thermal design analyses of the fuel and core were performed to verify that design criteria are met (see References 4.1-1 and 4.1-4).

4.1.4.3 Reactor Systems Dynamics

The analysis techniques used in reactor systems dynamics are described in Sections S.1.3 and S.4 of Reference 4.1-1. A complete stability analysis for the reactor coolant system is provided in Section 4.4.4.2.

4.1.4.4 Nuclear Engineering Analysis

The analysis techniques are described in the fuel design reports (see Reference 4.1-1).

4.1.4.5 Neutron Fluence Calculations

See Section 4.3.2.8.

4.1.4.6 Thermal Hydraulic Calculations

The digital computer program uses a parallel flow path model to perform the steady-state BWR reactor core thermal-hydraulic analysis. Program input includes the core geometry, operating power, pressure, coolant flow rate, inlet enthalpy, and the power distribution within the core. Output from the program includes core pressure drop, coolant flow distribution, critical power ratio, and axial variations of quality, density, and enthalpy for each fuel type.

4.1.5 REFERENCES

4.1-1 General Electric Standard Application for Reactor Fuel, NEDE-24011-P-A, and Supplement for United States, NEDE-24011-P-A-US (most recent approved version referenced in COLR).

4.1-2 Supplemental Reload Licensing Report for Columbia (most recent version referenced in COLR).

4.1-3 Fuel Bundle Information Report for Columbia (most recent approved version referenced in COLR).

4.1-4 "GNF2 Advantage Generic Compliance with NEDE-24011-P-A (GESTAR II)," NEDC-33270P, (most recent version referenced in COLR).

4.1-5 Deleted.

4.1-6 Deleted.

4.1-7 Crowther, R. L., Xenon Considerations in Design of Boiling Water Reactors, APED-5640, June 1968.

4.1-8 Deleted.

4.1-9 Beitch, L., Shell Structures Solved Numerically by Using a Network of Partial Panels, AIAA Journal, Volume 5, No. 3, March 1967.

4.1-10 E. L. Wilson, A Digital Computer Program For the Finite Element Analysis of Solids With Non-Linear Material Properties, Aerojet General Technical, Memo No. 23, Aerojet General, July 1965.

4.1-11 I. Farhoomand and E. L. Wilson, Non-Linear Heat Transfer Analysis of Axisymmetric Solids, SESM Report SESM71-6, University of California at Berkeley, Berkeley, California, 1971.

4.1-12 J. E. McConnelee, Finite-Users Manual, General Electric TIS Report DF 69SL206, March 1969.

4.1-13 R. W. Clough and C. P. Johnson, A Finite Element Approximation For the Analysis of Thin Shells, International Journal Solid Structures, Vol. 4, 1968.

4.1-14 A Computer Program For the Structural Analysis of Arbitrary Three-Dimensional Thin Shells, Report No. GA-9952, Gulf General Atomic.

4.1-15 Burgess, A. B., User Guide and Engineering Description of HEATER Computer Programs, March 1974.

4.1-16 Young, L. J., FAP-71 (Fatigue Analysis Program) Computer Code, GE/NED Design Analysis Unit R. A. Report No. 49, January 1972.

4.1-17 Rashid, Y. R, Theory Report for Creep-Plast Computer Program, GEAP-10546, AEC Research and Development Report, January 1972.

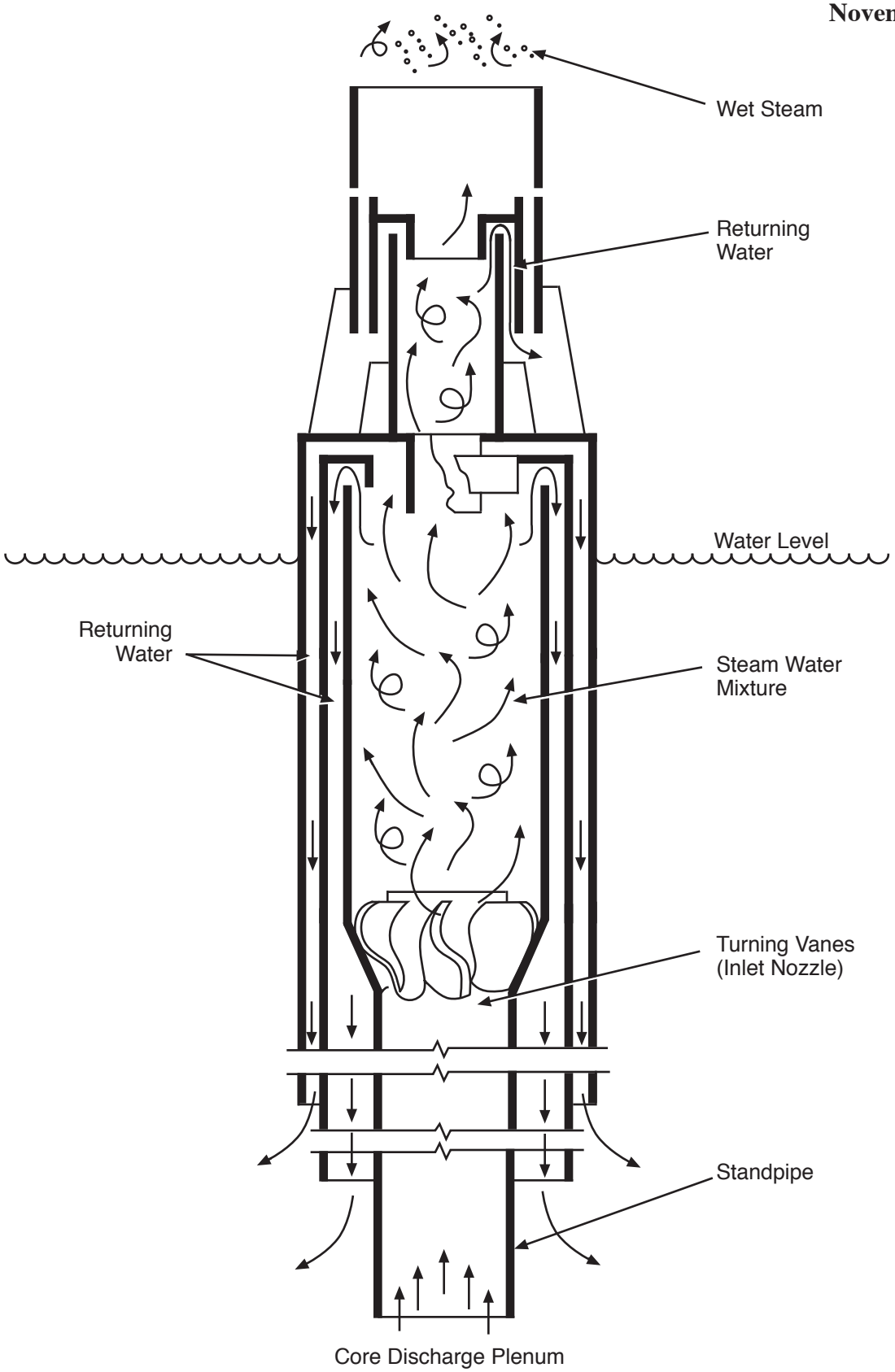

Columbia Generating Station
Final Safety Analysis Report

Steam Separator

Draw. No. 960690.95	Rev.	Figure 4.1-1

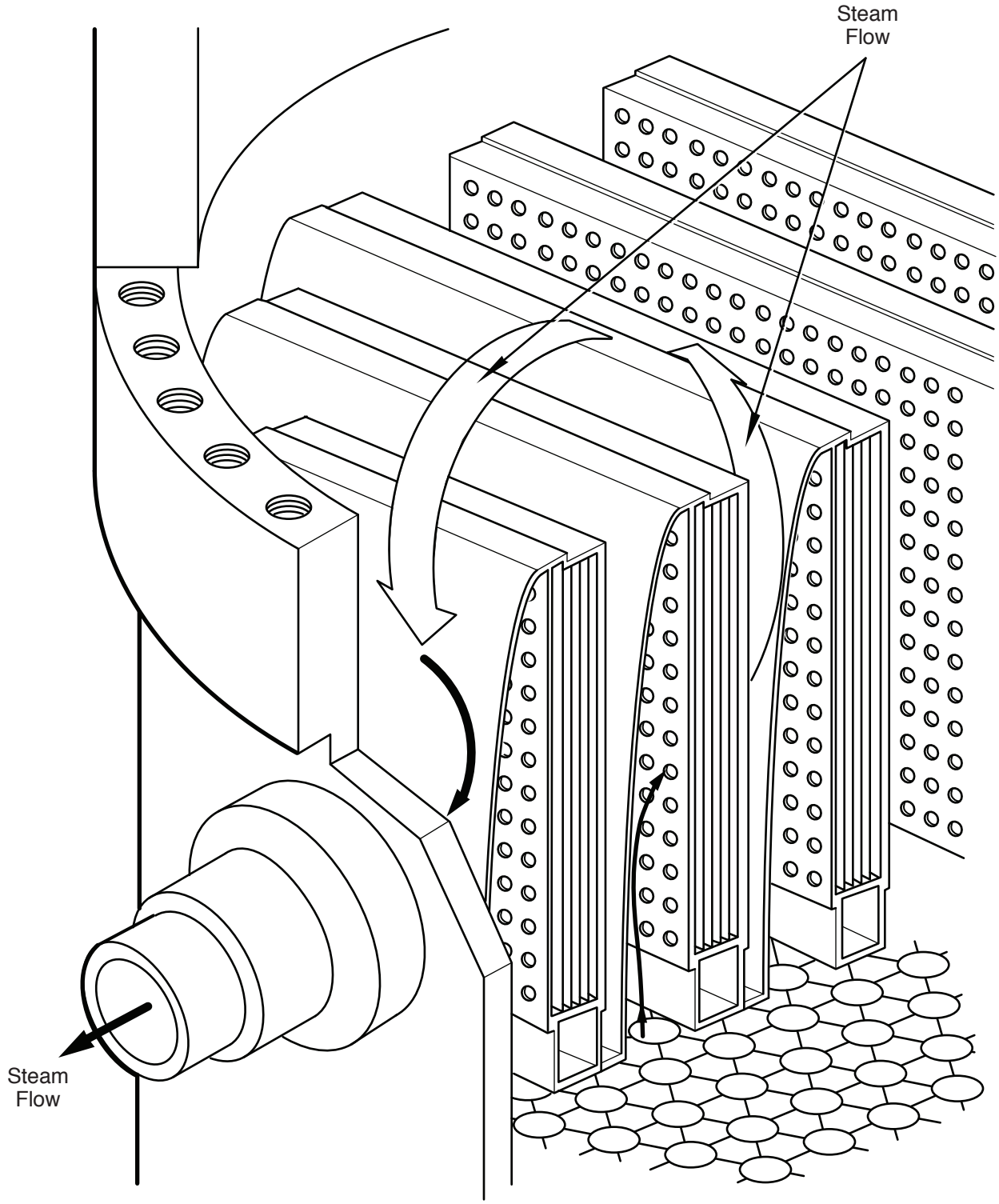

Columbia Generating Station Final Safety Analysis Report	Steam Dryer Panel		
	Draw. No. 960690.98	Rev.	Figure 4.1-2

DELETED

4.2 FUEL SYSTEM DESIGN

See Appendix A, Section A.4.2 of Reference 4.2-1.

4.2.1 DESIGN BASES

General Electric BWR fuel assembly and channel design bases, analytical methods, and evaluation results are described in Reference 4.2-1 (Appendix A, subsection A.4.2.1), Reference 4.2-6 and Reference 4.2-25.

4.2.1.1 Fuel System Damage Limits

4.2.1.1.1 Stress/Strain Limits

See subsection 2.2.1.1.2 of Reference 4.2-1.

4.2.1.1.2 Fatigue Limits

See subsections 2.2.1.2.2 of Reference 4.2-1.

4.2.1.1.3 Fretting Wear Limits

Fretting wear is considered in the mechanical design analysis of the assembly. See subsection 2.2.1.3.2 of Reference 4.2-1.

4.2.1.1.4 Oxidation, Hydriding, and Corrosion Limits

See subsection 2.2.1.4.2.2 of Reference 4.2-1 for the hydriding limit. Oxidation and corrosion are considered in the mechanical design analysis. See subsection 2.2.1.4.1.2 of Reference 4.2-1.

4.2.1.1.5 Dimensional Change Limits

See Reference 4.2-6 and subsection 2.2.1.5.2 of Reference 4.2-1.

4.2.1.1.6 Internal Gas Pressure Limit

See subsection 2.2.1.6.2 of Reference 4.2-1

.

4.2.1.1.7 Hydraulic Loads Limits

See subsection 2.2.1.7.2 of Reference 4.2-1.

4.2.1.1.8 Control Rod Reactivity Limits

See Section 3.2 and 3.3 of Reference 4.2-1 and Reference 4.2-7.

4.2.1.2 Fuel Rod Failure Limits

4.2.1.2.1 Hydriding Limits

See subsection 2.2.2.1 of Reference 4.2-1.

4.2.1.2.2 Cladding Collapse Limits

See subsection 2.2.2.2.2 of Reference 4.2-1.

4.2.1.2.3 Fretting Wear Limits

See subsection 2.2.1.3.2 of Reference 4.2-1.

4.2.1.2.4 Overheating of Cladding Limits

See subsections 2.2.2.4 and 4.3.1 of Reference 4.2-1.

4.2.1.2.5 Overheating of Pellet Limits

See subsection 2.2.2.5.2 of Reference 4.2-1.

4.2.1.2.6 Excessive Fuel Enthalpy Limits

See subsection 2.2.2.6 of Reference 4.2-1.

4.2.1.2.7 Pellet-Cladding Interaction Limits

See subsection 2.2.2.7.2 of Reference 4.2-1.

4.2.1.2.8 Bursting Limits

See subsections 2.2.2.8 and 2.2.3.4 of Reference 4.2-1.

4.2.1.2.9 Mechanical Fracturing Limits

See subsection 2.2.2.9.2 of Reference 4.2-1.

4.2.1.3 Fuel Coolability Limits

4.2.1.3.1 Cladding Embrittlement Limits

See Reference 4.2-10, subsection 2.2.3.1 of Reference 4.2-1.

4.2.1.3.2 Violent Expulsion of Fuel Limits

See subsection 2.2.3.2 of Reference 4.2-1.

4.2.1.3.3 Generalized Cladding Melt Limits

Same as Section 4.2.1.3.1 and subsection 2.2.3.3 of Reference 4.2-1.

4.2.1.3.4 Fuel Rod Ballooning Limits

Same as Section 4.2.1.2.8.

4.2.1.3.5 Structural Deformation Limits

See subsection 2.2.3.5 of Reference 4.2-1.

4.2.2 DESCRIPTION AND DESIGN DRAWINGS

See Reference 4.2-2.

4.2.2.1 Control Rods

The control rods (typical configuration shown in Figures 4.2-1.1, 4.2-1.2, and 4.2-1.3) perform the dual function of power shaping and reactivity control. Power distribution in the core is controlled during operation of the reactor by manipulating selected patterns of control rods. Control rod withdrawal tends to counterbalance steam void effects at the top of the core and results in significant axial power flattening.

The original control rods consists of a sheathed cruciform array of stainless steel tubes filled with boron-carbide (B_4C) powder. The control rods are 9.88 in. in total span and are separated uniformly throughout the core on a 12-in. pitch maximum. Each control rod is surrounded by four fuel assemblies.

The main structural member of a control rod is made of type 304 stainless steel and consists of a top handle, an original bottom casting with a velocity limiter and control rod drive coupling, a vertical cruciform center post, and four U-shaped absorber tube sheaths. The top handle, bottom casting, and center post are welded into a single skeletal structure. The U-shaped sheaths are resistance welded to the center post, handle, and castings to form a rigid housing to contain the boron-carbide-filled absorber rods. Rollers at the top and bottom of the control rod guide the control rod as it is inserted and withdrawn from the core. The control rods are cooled by the core bypass flow. The U-shaped sheaths are perforated to allow the coolant to circulate freely about the absorber tubes. Operating experience has shown that control rods constructed as described above are not susceptible to dimensional distortions.

The boron-carbide (B_4C) powder in the absorber tubes is compacted to about 70% of its theoretical density. The boron-carbide contains a minimum of 76.5% by weight natural boron. The boron-10 (B-10) minimum content of the boron is 18% by weight. Absorber tubes are made of type 304 stainless steel. Each absorber tube is 0.188-in. O.D. and has a 0.025-in. wall thickness. Absorber tubes are sealed by a plug welded into each end. The boron-carbide is longitudinally separated into individual compartments by stainless steel balls at approximately 16-in. intervals. The steel balls are held in place by a slight crimp of the tube. Should boron-carbide tend to sinter in service, the steel balls will keep the resulting void spaces distributed over the length of the absorber tube.

Some of the control rods have been replaced with Duralife 215 or Marathon control rods. The main structural member of the Duralife 215 control rod design is made of stainless steel and consists of a top handle, a tie rod, a bottom control rod drive coupling, and four sheaths containing the neutron absorber. The top handle, tie rod, velocity limiter, and sheaths are welded into a single structure. The neutron absorber in each wing of the sheath consists of 18 high-purity stainless-steel tubes filled with boron-carbide, three hafnium rods at the edge of the wing, and a hafnium plate at the top.

The sheaths of the Duralife 215 blades are attached to the structure with full fusion corner welds to the handle, tie rod, and velocity limiter to form a rigid housing. Inconel X750 rollers at the top and bottom of the control rod guide the control rod as it is inserted and withdrawn from the core. These rollers rotate on PH 13-8 Mo pins. The sheaths are perforated and the hafnium absorber plate has coolant grooves to allow the coolant to circulate freely about the absorber and flush the joint between the sheath and handle.

The number of boron carbide absorber rods in each wing has been changed from 19 rods with an I.D. of 0.138 in. to 18 rods with an I.D. of 0.148 in. The outside diameter remains the same. The length of the absorber column in these rods has been reduced from 143 in. to 137 in. to accommodate a top 6-in.-high hafnium plate. In addition, three 0.188 in. O.D. hafnium rods have been added to the edge of each wing.

The Marathon control rod blade consists of a top handle, a segmented tie rod (for weight savings), a bottom control rod coupling/velocity limiter and four wings consisting of an array of square tubes. The square tubes each have four lobes to allow adjacent tubes to be welded to each other. The absorber tubes are welded lengthwise to form the four wings of the control rod. Each wing is comprised of 17 absorber tubes. The four wings are then welded to the tie rod to form the cruciform-shaped member of the control rod.

The square tubes are circular inside and are loaded with either B_4C or hafnium. The combination of absorbers and absorber tubes is based on the needed initial reactivity worth. In addition, empty capsules are used in some absorber tubes to provide a plenum for helium released during B_4C burnup.

A comparison of the original, the Duralife 215 and the Marathon control rod dimensions and materials is given in Table 4.2-1.

4.2.2.2 Velocity Limiter

The control rod velocity limiter (see Figure 4.2-2) is an integral part of the bottom assembly of each control rod. This feature protects against a high reactivity insertion rate by limiting the control rod velocity in the event of a control rod drop accident. It is a one-way device in that the control rod scram velocity is not significantly affected but the control rod dropout velocity is reduced to a permissible limit.

The velocity limiter is in the form of two nearly mated conical elements that act as a large clearance piston inside the control rod guide tube. The lower conical element is separated from the upper conical element by four radial spacers 90 degrees apart.

The hydraulic drag forces on a control rod are approximately proportional to the square of the rod velocity and are negligible at normal rod withdrawal or rod insertion speeds. However, during the scram stroke the rod reaches high velocity, and the drag forces must be overcome by the drive mechanism.

To limit control rod velocity during dropout but not during scram, the velocity limiter is provided with a streamlined profile in the scram (upward) direction. Thus, when the control rod is scrammed water flows over the smooth surface of the upper conical element into the annulus between the guide tube and the limiter. In the dropout direction, however, water is trapped by the lower conical element and discharged through the annulus between the two conical sections. Because this water is forced in a partially reversed direction into water flowing upward in the annulus, a severe turbulence is created, and this slows the descent of the control rod assembly to less than 5 ft/sec.

4.2.3 DESIGN EVALUATION

See Appendix A, subsection A.4.2.3 of Reference 4.2-1.

4.2.3.1 Fuel System Damage Evaluation

4.2.3.1.1 Stress/Strain Evaluation

Fuel rod internal pressure has been shown to remain below system pressure for rod peak burnups well beyond anticipated achieved burnup. For GNF fuel see section 2.2.1.1.3 of Reference 4.2-1.

4.2.3.1.2 Fatigue Evaluation

See subsection 2.2.1.2.3 of Reference 4.2-1.

4.2.3.1.3 Fretting Wear Evaluation

See Reference 4.2-12, subsection 2.2.1.3.3 of Reference 4.2-1.

4.2.3.1.4 Oxidation, Hydriding, and Corrosion Evaluation

See subsections 2.2.1.4.1.3 and 2.2.1.4.2.3 of Reference 4.2-1.

4.2.3.1.5 Dimensional Change Evaluation

See Reference 4.2-6, subsection 2.2.1.5.3 of Reference 4.2-1.

4.2.3.1.6 Internal Gas Pressure Evaluation

See Section 3.2.6 of reference 4.2-2. The internal pressure is used in conjunction with other loads on the fuel rod cladding when calculating cladding stresses and comparing these stresses to the design criteria. The analysis results show that the calculated cladding stresses are below allowable limits even with internal gas pressure and other loads at end of life normal and transient conditions, respectively.

4.2.3.1.7 Hydraulic Load Evaluation

See subsection 2.2.1.7.3 of Reference 4.2-1, 4.2-12 and Section 3.9.

4.2.3.1.8 Control Rod Reactivity Evaluation

See Appendix A, subsection A.4.3.2 of Reference 4.2-1. Energy Northwest calculates the fluence of each control blade using an appropriate conversion factor for fuel exposures adjacent to the control blade. Control blade shuffling or replacement is based on the calculated blade fluence as compared to vendor allowed values (Reference 4.2-22). The vendor allowed values account for the reduction in control blade worth due to a combination of boron-10 depletion and boron loss resulting from cracking of the absorber tubes.

4.2.3.2 Fuel Rod Failure

4.2.3.2.1 Hydriding Evaluation

See Section 4.2.3.1.4.

4.2.3.2.2 Cladding Collapse Evaluation

See Section 3.2.8 of Reference 4.2-2.

4.2.3.2.3 Fretting Wear Evaluation

See Section 4.2.3.1.3.

4.2.3.2.4 Overheating of Cladding Evaluation

See Section 3.6 of Reference 4.2-2.

4.2.3.2.5 Overheating of Pellet Limits

See Section 3.2.9 of Reference 4.2-2.

4.2.3.2.6 Excessive Fuel Enthalpy Evaluation

See Section 15.4.9 Section 3.12 of Reference 4.2-2.

4.2.3.2.7 Pellet-Cladding Interaction Evaluation

Calculated results do not exceed the 1% cladding strain or $MCPR_{99.9\%}$; thus fuel pellet melting does not occur. These are the most applicable general design criteria for pellet cladding interaction (PCI) phenomena. While PCI-induced fuel failures remain a commercially undesirable problem, they are not a safety concern. Boiling water reactors (BWRs) have been designed and licensed with provisions to accommodate operating with fuel cladding perforation, and field experience confirms that plants do indeed operate within radiological release limits.

Operation below the thermal-mechanical limits historically has resulted in very few pellet-cladding interaction (PCI) fuel failures. Furthermore power maneuvering guidelines have been developed that have further reduced fuel failures due to the PCI mechanism.

4.2.3.2.8 Bursting Evaluation

See 3.11.1 of Reference 4.2-2.

4.2.3.2.9 Mechanical Fracturing Evaluation

See Reference 4.2-12 and subsection 2.2.2.9.3 of Reference 4.2-1.

4.2.3.3 Fuel Coolability Evaluation

4.2.3.3.1 Cladding Embrittlement Evaluation

See FSAR Section 4.2.3.2.8 and subsection 2.2.3.1 of Reference 4.2-1.

4.2.3.3.2 Violent Expulsion of Fuel Evaluation

See FSAR Section 15.4.9 and Section 3.12 of Reference 4.2-2.

4.2.3.3.3 Generalized Cladding Melt Evaluation

See FSAR Section 4.2.3.2.8 and Section 3.11.2 of Reference 4.2-2.

4.2.3.3.4 Fuel Rod Ballooning Evaluation

See FSAR Section 4.2.3.2.8 and Section 3.11.1 of Reference 4.2-2.

4.2.3.3.5 Structural Deformation Evaluation

See Section 4.2.3.2.9.

4.2.4 TESTING, INSPECTION, AND SURVEILLANCE PLANS

4.2.4.1 Fuel Testing, Inspection, and Surveillance

See Appendix A, subsection A.4.2.4 of Reference 4.2-1.

4.2.4.2 Online Fuel System Monitoring

Columbia Generating Station (CGS) has two independent radiation detection systems that are directly capable of detecting fission product releases from failed fuel rods in an online manner. The main steam line radiation (MSLR) monitors are described in Section 11.5.2.1.1. Because the MSLR monitors are located relatively close to the reactor core, they are capable of sensing gross fission product releases in a few seconds.

The offgas system radiation (OGSR) monitors are capable of detecting low-level emissions of noble gases in 2 to 3 minutes after the gases leave the fuel. The OGSR monitors are described in more detail in Section 11.5.2.2.1.

4.2.4.3 Post-Irradiation Surveillance

The following fuel surveillance will be conducted after the refueling outage for the CGS unit on fuel discharged during the refueling outage that has given indication of gross cladding defects or anomalies during plant operation.

Scope

The fuel surveillance program, developed to provide verification of the reliable performance of the CGS fuel design, will consist of the following inspections and measurements:

a. Visual inspection of the peripheral rods will be performed on discharged fuel, that has given indication of gross cladding defects or anomalies during plant operation, after each refueling outage. The examination will be capable of detecting and characterizing generic gross cladding defects or anomalies; and

b. If anomalous behavior of the fuel cladding, components of the fuel assembly, or significant rod bow are detected by visual examination, further investigation, and measurements of such significant anomalies will be conducted after the refueling outages.

Implementation

a. Onsite receiving inspection of all the initial core fuel assemblies and subsequent reloads will be documented. Any significant anomalies detected will be documented;

b. Fuel performance history and related plant operational data will be monitored and analyzed during operation;

c. Assemblies discharged during each refueling outage that have given indication of gross cladding defects or anomalies during plant operation will be selected for visual inspection. The visual examination of the peripheral rods will include observations for cladding defects, fretting, rod bowing, missing components, corrosion, crud deposition, and geometric distortions. The defects or anomalies on the cladding surface area examined will be either videotaped or photographed to document and characterize the anomaly;

d. In the event that significant anomalies are observed during the refueling examination, all other discharged assemblies may also be visually inspected. The results will be analyzed to determine fuel utilization strategy and possible safety implications in accordance with the operating procedures and applicable licensing requirements;

e. If unusual defects are observed, the fuel with the defects and the applicable operational data will be investigated and further appropriate tests and examination of the defected fuel will be performed; and

f. If defects of an unusual nature are detected, an oral report will be made to the NRC after the completion of the inspection activities. Under normal conditions, the report will contain visual examination summaries confirming the reliable performance of the fuel assemblies. In the event that significant anomalies or unusual defects are observed, the report will contain the description and related data of onsite receiving inspection and operational conditions. Evaluation and studies to identify causes for any encountered anomalies or defects will be assessed and the results will be reported to the NRC as they become available.

4.2.4.4 Channel Management Program

Fuel channels are subject to bulge, bow, and elongation when irradiated in reactors. Excessive deformations (bow and bulge) could produce traversing in-core probe asymmetries and control blade frictional resistance.

All new reload fuel will be loaded with new channels. Energy Northwest has in the past reinserted requalified channels in CGS but has transitioned away from channel reuse (References 4.2-13, 4.2-14, and 4.2-15).

The Safety Evaluation Report Related to the Operation of WPPSS Nuclear Project No. 2, Supplement 3 (Reference 4.2-16), discusses measurement of selected discharged fuel channels for deflection. The intent of this deflection measurement was to qualify channels for reuse. Because Energy Northwest no longer reuses channels, the qualification of channel reuse has been discontinued.

In addition to the above channel management program, Energy Northwest is taking a number of operational actions to monitor channel distortion in the core. These include Technical Specifications requirements for periodic scram testing and rod notch testing, which would provide an indication of pending driveline friction between control rod and bowed channels. Should either of these tests suggest a driveline friction problem, the tests described in NEDE-21354-P, Reference 4.2-6, would then be used to isolate the cause.

4.2.5 REFERENCES

4.2-1 General Electric Company, General Electric Standard Application for Reactor Fuel (NEDE-24011-P-A), and Supplement for United States (NEDE-24011-P-A-US) (most recent approved version referenced in COLR).

4.2-2 "GNF2 Advantage Generic compliance with NEDE-24011-P-A (GESTAR II)," NEDC-33270P, (most recent version referenced in COLR).

4.2-3 Deleted.

4.2-4 Deleted.

4.2-5 Deleted.

4.2-6 General Electric Company, BWR Fuel Channel Mechanical Design and Deflection, NEDE-21354-P, September 1976.

4.2-7 General Electric Company, Control Blade Lifetime with Potential B_4C Loss, NEDO-24226 and Supplement 1.

4.2-8 Deleted.

4.2-9 Deleted.

4.2-10 General Electric Company, Analytical Model for Loss-of-Coolant Analyses in Accordance with 10 CFR 50 Appendix K, NEDO-20566-A, September 1986.

4.2-11 Deleted.

4.2-12 General Electric Company, GE Duralife 215 Control Rod Safety Evaluation, GENE-778-028-0790, Revision 2, July 1992.

4.2-13 Letter and Attachment from G. C. Sorensen, Manager, Regulatory Programs, Supply System to NRC, Subject: Nuclear Plant No. 2, Operating License NPF-21, Modification to WNP-2 Cycle Reload Submittal and Response to NRC Bulletin 90-02: Loss of Thermal Margin Caused by Channel Box Bow, GO2-90-075, April 13, 1990.

4.2-14 Letter from G. C. Sorensen, Manager, Regulatory Programs, Supply System to NRC, Subject: Nuclear Plant No. 2, Operating License NPF-21, Final Response to NRC Bulletin 90-02; Loss of Thermal Margins Caused by Channel Box Bow, GO2-90-162, September 28, 1990.

4.2-15 Letter and Attachments from P. L. Eng., Project Manager, NRC to G. C. Sorensen, Manager, Regulatory Programs, Supply System, Evaluation of Response to NRC Bulletin 90-92; Loss of Thermal Margins Caused by Channel Box Bow (TAC No. 76354), April 22, 1991.

4.2-16 Nuclear Regulatory Commission, Safety Evaluation Report Related to the Operation of WPPSS Nuclear Project No. 2, NUREG-0892, Supplement 3, Washington, D.C., May 1983.

4.2-17 Deleted.

4.2-18 Deleted.

4.2-19 Deleted.

4.2-20 General Electric Company, GE Marathon Control Rod Assembly (NEDE-31758P-A), October 1991.

4.2-21 Deleted.

4.2-22 General Electric Company, GE BWR Control Rod Lifetime, NEDE-30931 (most recent revision specified in CVI 768-00,91).

4.2-23 Deleted.

4.2-24 Deleted.

4.2-25 General Electric Company, Fuel Assembly Evaluation of Combined Safe Shutdown Earthquake (SSE) and Loss-of-Coolant Accident (LOCA) Loadings, NEDE-21175-3-P, July 1982.

4.2-26 Deleted.

Table 4.2-1

Control Rod Parameters

	Original Equipment	Duralife 215	Marathon
Control rod weight, lb (kg)	186 (84.4)	204 (92.5)	197 (89.4)
Absorber rod - boron-carbide			
Number per control rod	76	72	52
Length, in. (mm)	143 (3632)	137 (3480)	143.7 (3650)
Inside diameter, in. (mm)	0.138 (3.51)	0.148 (3.76)	0.189 (4.80)
Density, grams/cm^3	1.76 (Nominal)	1.76 (Nominal)	1.76 (70% Theoretical)
Absorber tube			
Cladding material	Stainless steel	High purity stainless steel	304S
O.D., in. (mm)	0.188 (4.78)	0.188 (4.78)	0.246 (6.248)
Wall thickness, in. (mm)	0.025 (0.635)	0.020 (0.508)	0.021 (0.533)
Absorber rods - hafnium			
Number per control rod	-	12	16
Length, in. (mm)	-	143 (3632)	143.4 (3642)
Diameter, in. (mm)	-	0.188 (4.78)	0.188 (4.78)
Density, grams/cm^3		13.1	13.0
Absorber plate - hafnium			
Number per control rod	-	4	-
Length, in. (mm)	-	6 (152)	-
Width, in. (mm)	-	3.42 (86.87)	-
Thickness, in. (mm)	-	0.188 (4.78)	-
Density, grams/cm^3	-	13.1	-
Sheath thickness, in. (mm)	0.030 (0.762)	0.034 (0.864)	-
Stiffener	Yes	No	-
Pin material	Haynes Alloy 25	PH 13-8 MO	PH 13-8 MO
Roller material	Stellite 3	Inconel X750	Inconel X750

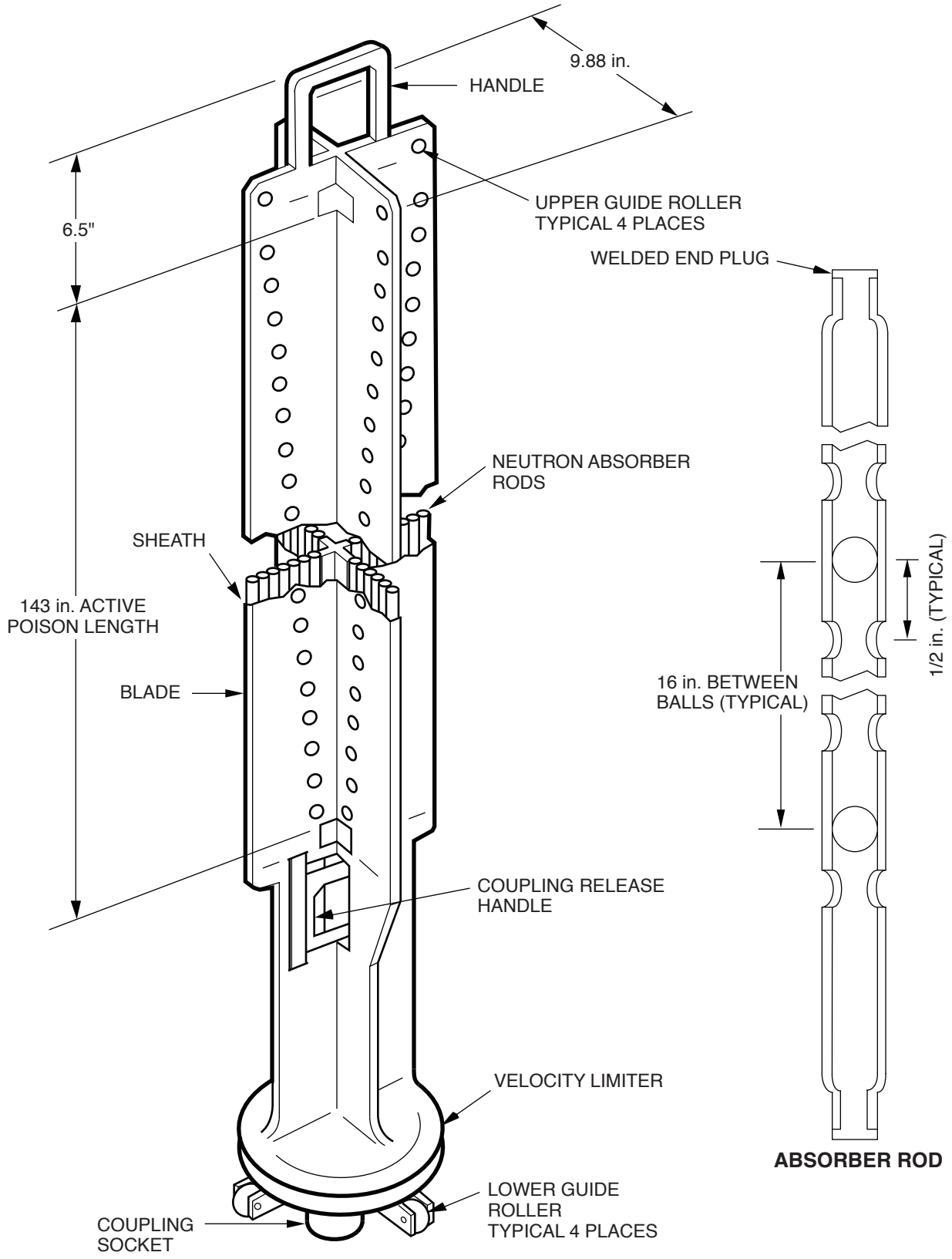

Columbia Generating Station
Final Safety Analysis Report

Original Equipment (OEM) Control Rod Blade Assembly

Draw. No. 960690.96	Rev.	Figure 4.2-1.1

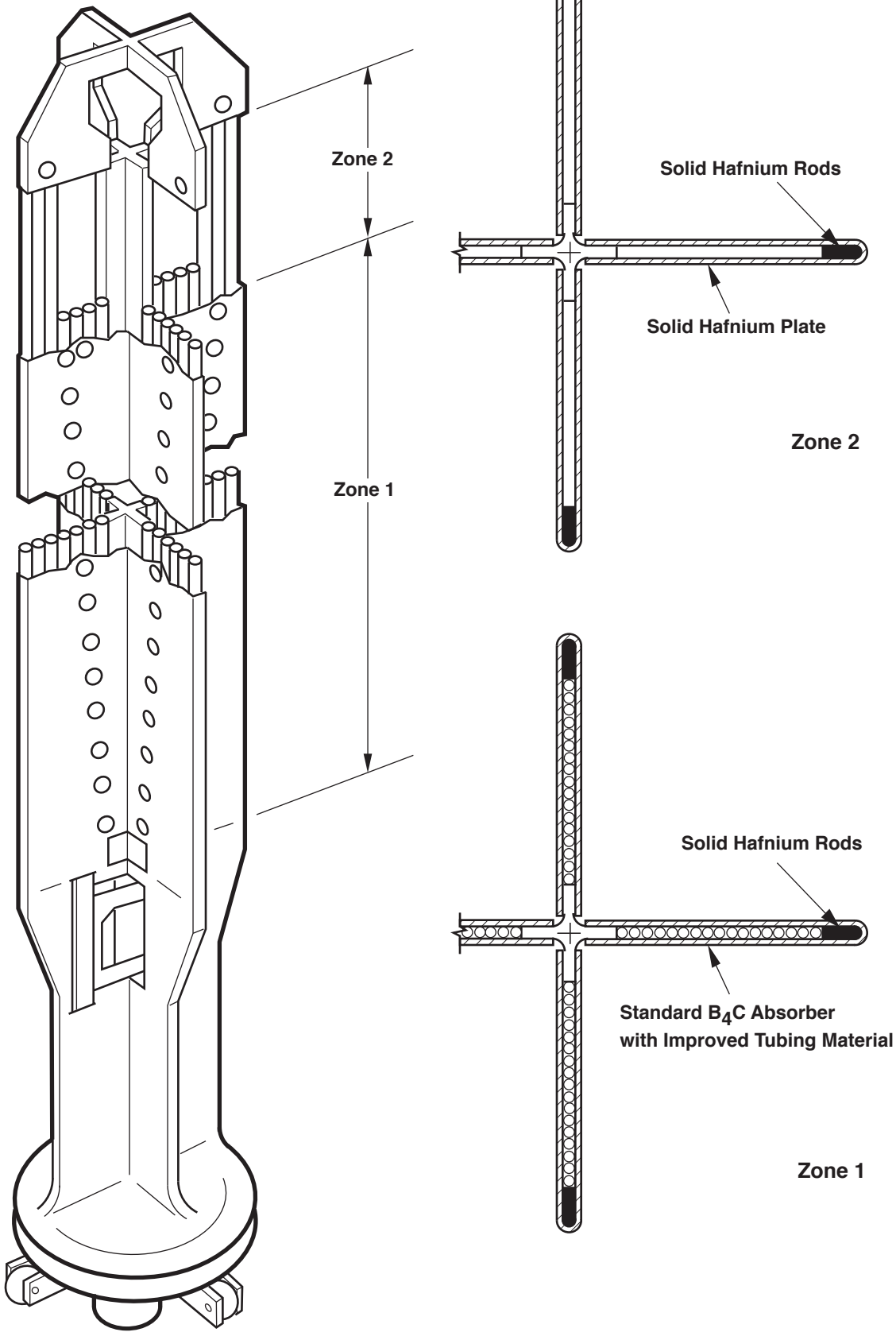

Columbia Generating Station
Final Safety Analysis Report

DuraLife 215 Control Rod Blade Assembly

Draw. No. 010126.54	Rev.	Figure 4.2-1.2

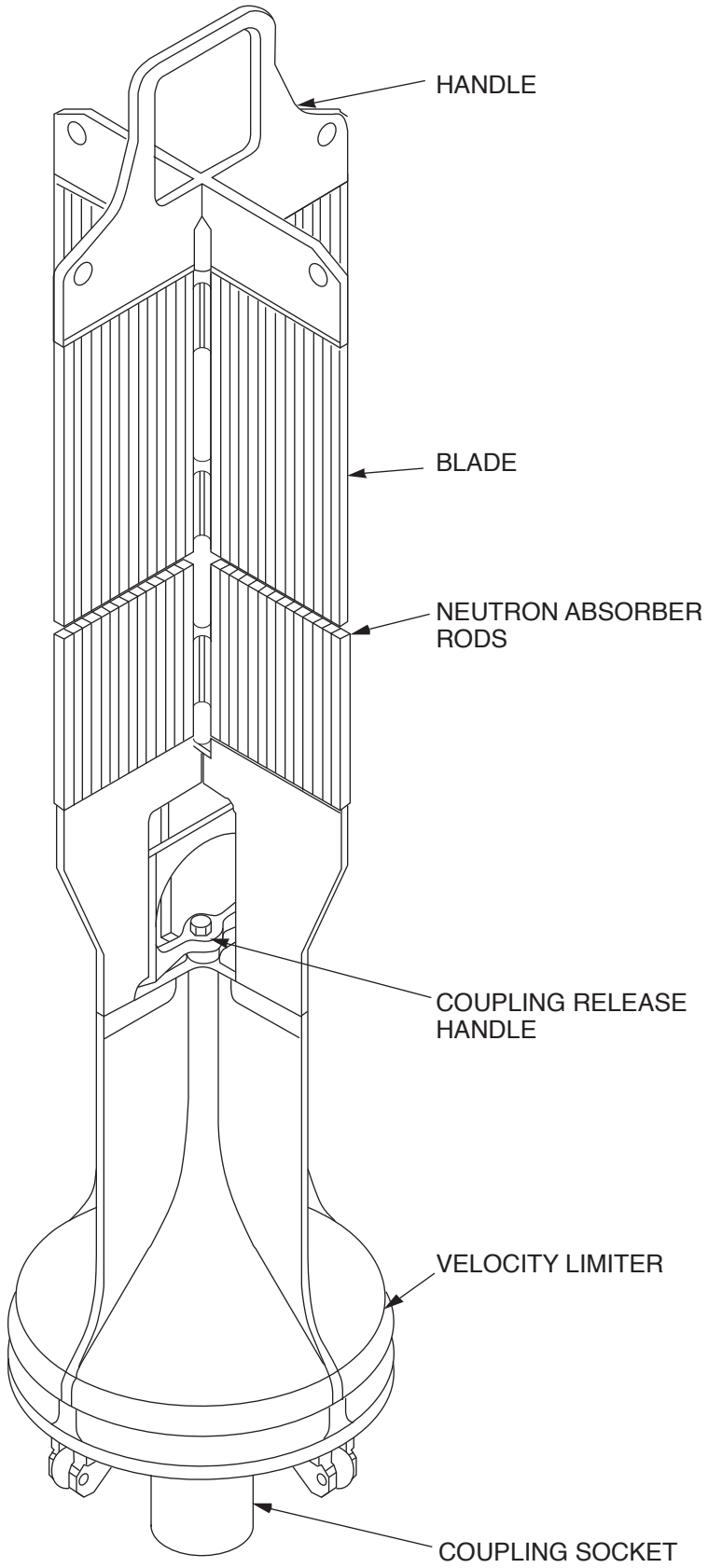

Columbia Generating Station
Final Safety Analysis Report

Marathon Control Rod Blade Assembly

Draw. No. 010126.55	Rev.	Figure 4.2-1.3

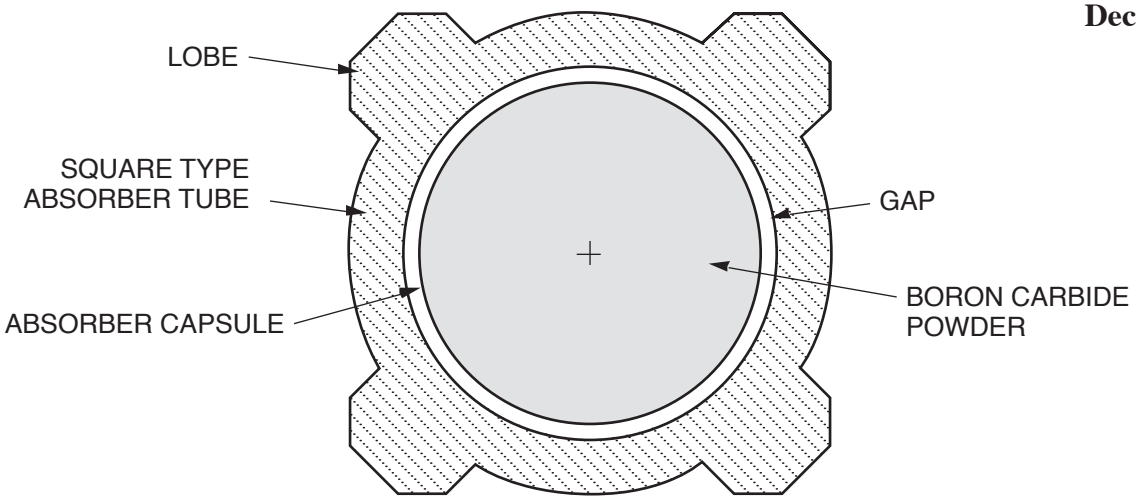

B_4C Placement in Capsules and Absorber Tubes

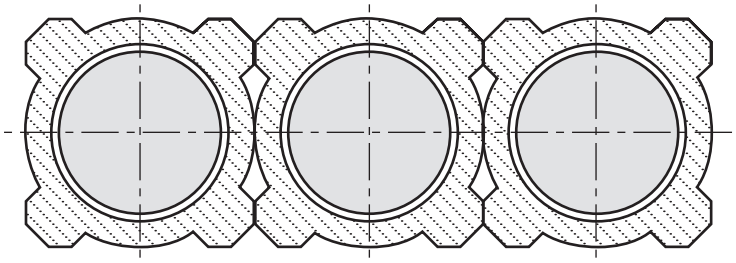

Absorber Tubes
(Before Welding)

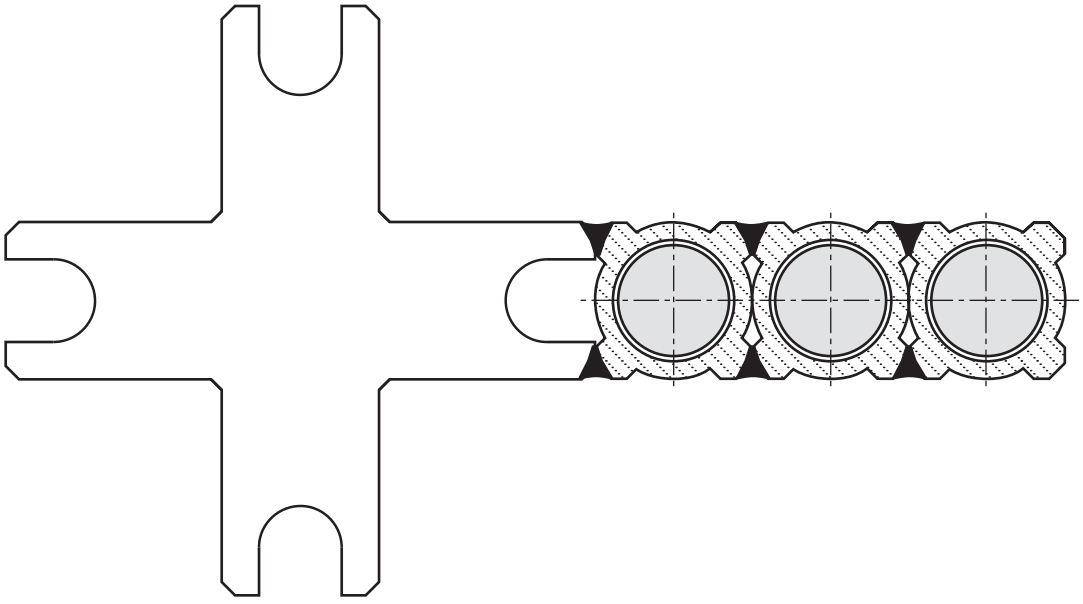

Absorber Tubes Welded to Tie Rods

Columbia Generating Station Final Safety Analysis Report	Marathon Control Rod Blade Absorber Details		
	Draw. No. 010126.56	Rev.	Figure 4.2-1.4

TYPE	ABSORBER LOADING
1	ONE 143.1” LONG HAFNIUM ROD
2	FOUR 35.77” LONG B4C CAPSULES
3	THREE 35.77” LONG B4C CAPSULES ONE 23.85” LONG B4C CAPSULE ONE 11.925” LONG EMPTY CAPSULE

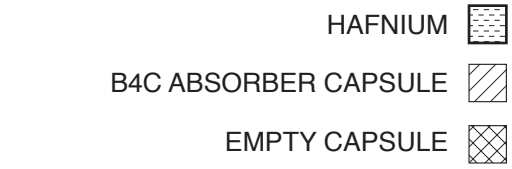

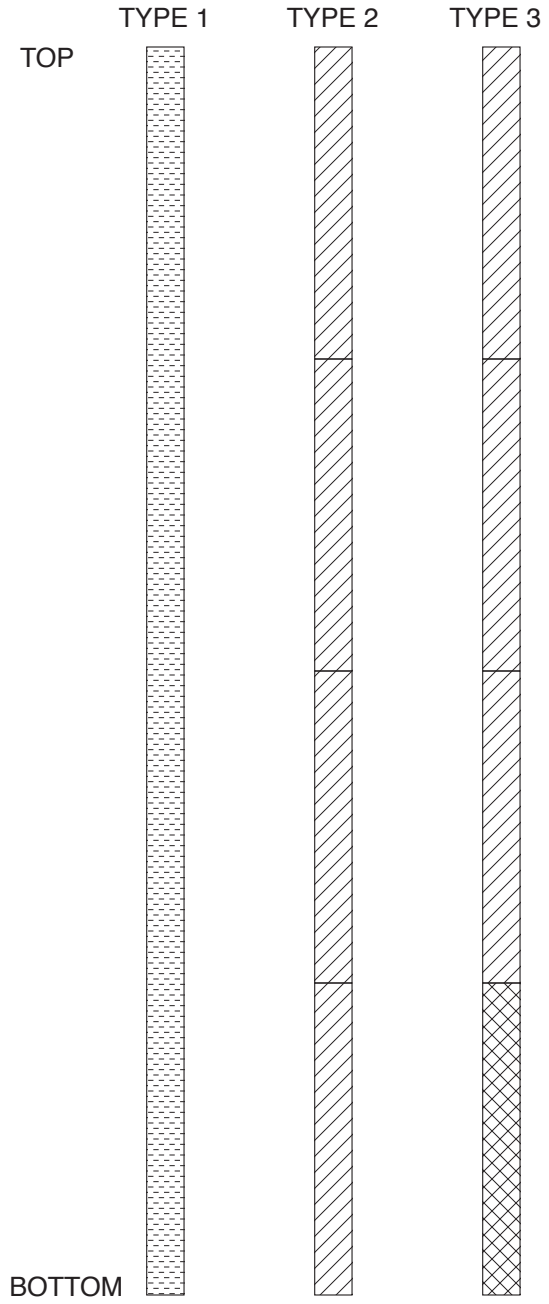

ABSORBER MATERIAL CONTAINED IN TUBES

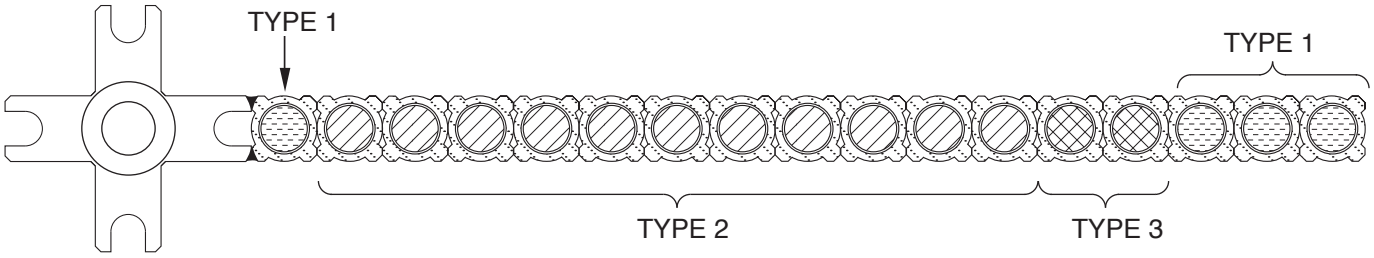

CONTROL ROD CROSS PARTIAL SECTION

Columbia Generating Station
Final Safety Analysis Report

Marathon Control Rod Blade Absorber Placement

Draw. No. 010126.57	Rev.	Figure 4.2-1.5

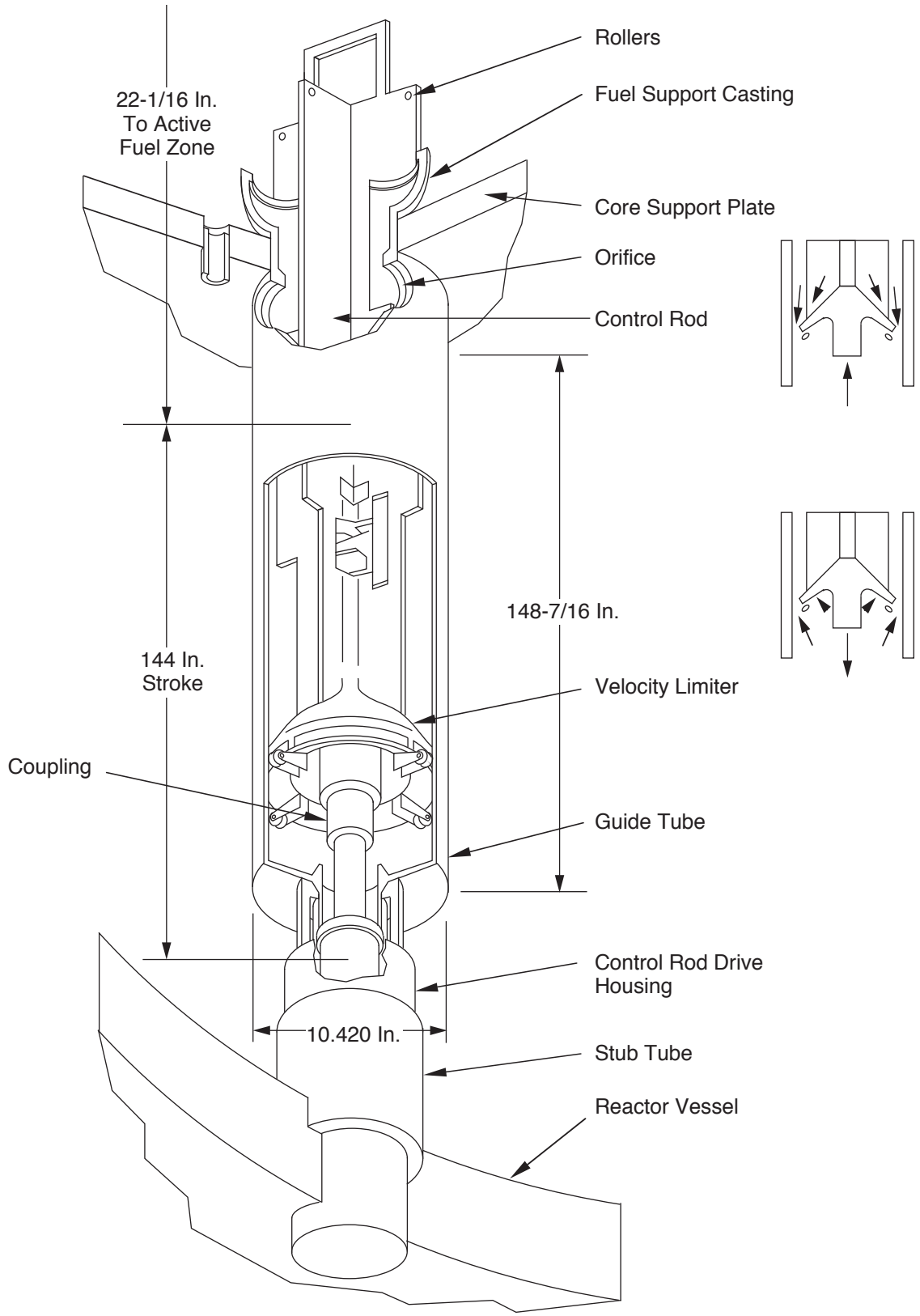

Columbia Generating Station
Final Safety Analysis Report

Control Rod Velocity Limiter

Draw. No. 960690.97	Rev.	Figure 4.2-2

4.3 NUCLEAR DESIGN

4.3.1 DESIGN BASES

See Appendix A, subsection A.4.3.1 of Reference 4.3-4.

4.3.1.1 Reactivity Basis

See Appendix A, subsection A.4.3.1.1 of Reference 4.3-4.

4.3.1.2 Overpower Bases

See Appendix A, subsection A.4.3.1.2 of Reference 4.3-4.

4.3.2 DESCRIPTION

See Appendix A, subsection A.4.3.2 of Reference 4.3-4.

4.3.2.1 Nuclear Design Description

See Appendix A, subsection A.4.3.2.1 of Reference 4.3-4. The reference core loading pattern is provided in the Supplemental Reload Licensing Report (Reference 4.3-7). Table 4.3-3, Table 2-1 of Reference 4.3-1 and Reference 4.3-8 provide reload fuel neutronic design values.

4.3.2.2 Power Distribution

See Appendix A, subsection A.4.3.2.2 of Reference 4.3-4.

4.3.2.2.1 Power Distribution Calculations

See References 4.3-7 and 4.3-3.

4.3.2.2.2 Power Distribution Measurements

See Appendix A, subsection A.4.3.2.2.2 of Reference 4.3-4.

4.3.2.2.3 Power Distribution Accuracy

See Appendix A, subsection A.4.3.2.2.3 of Reference 4.3-4.

4.3.2.2.4 Power Distribution Anomalies

See Appendix A, subsection A.4.3.2.2.4 of Reference 4.3-4.

4.3.2.3 Reactivity Coefficients

See Appendix A, subsection A.4.3.2.3 of Reference 4.3-4.

4.3.2.4 Control Requirements

See Appendix A, subsection A.4.3.2.4 of References 4.3-4.

4.3.2.4.1 Shutdown Reactivity

See Appendix A, subsection A.4.3.2.4.1 of Reference 4.3-4.

The cold shutdown margin for the reference core loading pattern is provided in Reference 4.3-7.

As discussed in Section 4.6.3.1.1.5, the shutdown margin with the highest worth control rod withdrawn shall be analytically determined to be at least 0.38% Δk/k or shall be determined by test to be at least 0.28% Δk/k. To ensure that the safety design basis for shutdown margin is satisfied, additional design margin is adopted during design development so that a shutdown margin of at least 1.00% Δk/k is calculated with the highest worth control rod fully withdrawn.

4.3.2.4.2 Reactivity Variations

See Appendix A, subsection A.4.3.2.6 of Reference 4.3-4.

The excess reactivity designed into the core is controlled by the control rod system supplemented by gadolinia-urania fuel rods (Reference 4.3-3).

Control rods are used during the cycle partly to compensate for burnup and partly to control the power distribution.

Reactivity balances are not used in describing BWR behavior because of the strong interdependence of the individual constituents of reactivity. Therefore, the design process does not produce components of a reactivity balance at the conditions of interest. Instead, it gives the k_{eff} representing all effects combined. Further, any listing of components of a reactivity balance is quite ambiguous unless the sequence of the changes is clearly defined.

4.3.2.5 Control Rod Patterns and Reactivity Worths

See References 4.3-1 and 4.3-3.

4.3.2.6 Criticality of Reactor During Refueling

See Appendix A, subsection A.4.3.2.6 of Reference 4.3-4.

Compliance with Technical Specification shutdown margin requirements is demonstrated through plant procedures and reactivity analyses performed for reload specific refueling activities.

4.3.2.7 Stability

See Appendix A, subsection A.4.3.2.7 of Reference 4.3-4.

4.3.2.7.1 Xenon Transients

See Appendix A, subsection A.4.3.2.7.1 of Reference 4.3-4.

4.3.2.7.2 Thermal Hydraulic Stability

See Appendix A, subsection A.4.3.2.7.2 of Reference 4.3-4.

4.3.2.8 Vessel Irradiations

The reactor pressure vessel (RPV) irradiation calculation provides a best-estimate prediction of the fluence rather than a conservative prediction as was the case with earlier methods. The methodology for the neutron flux calculation conforms to Licensing Topical Report (LTR) NEDC-32983P-A (Reference 4.3-10). In general, the methodology described in the LTR adheres to the guidance in Regulatory Guide 1.190 for neutron flux evaluation and was approved by the U.S. NRC in the Safety Evaluation Report (SER) for referencing in licensing actions.

The fluence calculations are performed with the DORTG01V discrete ordinates transport code. The LTR provides a description of the DORT calculation used to determine the RPV fluence, as well as the calculations used to predict the measured dosimetry and validate the transport model. The calculational model includes a representation of the peripheral fuel assemblies and the core-internals, downcomer and vessel geometry. Calculations are performed to determine the bundle-average power distribution in the peripheral fuel bundles for input to the DORT core neutron source. Calculations employ a relatively fine (r, θ, z) spatial mesh and are carried out using an S_{12} angular quadrature set. The eighty-group MATXS cross section library is the basic nuclear data set. The cross section data used in these calculations is based on the ENDF/B-V nuclear data except for iron, hydrogen and oxygen. Since the cross sections for these elements have changed significantly in the more recent ENDF/B-VI data set, ENDF/B-VI cross sections were used for oxygen, hydrogen, and individual iron isotopes. The cross section library is used in performing the energy and spatial self-shielding and removal

calculations. The scattering cross sections are represented using a P_3 Legendre expansion. The calculations are performed in azimuthal (r, θ) and axial (r, z) geometries. A synthesis technique is used to determine the three-dimensional fluence distribution.

The impact on the P-T curves due to variation in the RPV flux relating to changes in the water density in regions above the core are appropriately addressed by conservatisms in the fluence analysis.

Figure 4.3-1 shows a quadrant of the core and the vessel internal components that are relevant to the flux calculation (Reference 4.3-5). The reactor core is divided into three radial zones, based on the geometric layout of the bundles and their relative contribution to the shroud and RPV flux. The (r, θ) analysis used the polar coordinates to define the calculation model as a planar sector between pre-selected reactor azimuths (typically 0° and 90°). A single bounding set of results are constructed from the maximum flux and fluence values between the GNF2 and GNF3 fuel-results at each radial position, elevation, and azimuth. The model includes several material regions radially: three in-core regions, the bypass water region, shroud, downcomer water, jet-pump riser, jet-pump inlet mixer, surveillance capsule holder/bracket, and the RPV cladding and base metal.

The core model for the axial (r,z) calculation is a cylinder simulating the cross-sectional area of the core at a pre-selected azimuth. For the capsule flux calculation, the (r,z) calculations were performed at the 30° and 120° azimuth (capsule locations). A single bounding set of results are constructed from the maximum flux and fluence values between the GNF2 and GNF3 fuel-results at each radial position, elevation, and azimuth. The core cylinder contains the afore-mentioned three radial zones for each of the 25 axial fuel nodes. Each axial fuel node is sub-divided into bundle-dependent radial regions so that each core region is modeled with its respective water density, structure material density, and actinide concentration. Similar to the (r, θ) model, there are bypass water, Jet Pump Assemblies, shroud, downcomer water, and RPV regions beyond the core.

Table 4.3-1 summarizes the neutron fluence results (Reference 4.3-5). Fluence results are provided at 54 EFPY based on the current licensed thermal power (CLTP) of each historical cycle and assuming a power level of 3,544 MWt for the projected cycles. Additional fluence results are provided at 31, 43, and 54 EFPY based on the original licensed thermal power (OLTP) of 3,343 MWt for every cycle. These additional OLTP fluence results correspond to 29.8, 41.0, and 51.3 EFPY based on CLTP.

Note: Columbia Generating Station is evaluated for a fluence that bounds the required value for operation at 3544 MWt from cycle 24 through the end of life (Reference 4.3-14).

The RPV peak fluence (at 54 EFPY) given in Table 4.5 of Reference 4.3-6 is used for development of the P-T limit curves. The 1/4 T fluences were calculated in accordance with RG 1.99, Revision 2..

4.3.3 ANALYTICAL METHODS

See Appendix A, subsection A.4.3.3 of Reference 4.3-4

4.3.4 CHANGES

See Appendix A, subsection A.4.3.4 of Reference 4.3-4.

4.3.5 REFERENCES

4.3-1 "GNF2 Advantage Generic compliance with NEDE-24011-P-A (GESTAR II)," NEDC-33270P, (most recent version referenced in COLR).

4.3-2 Deleted.

4.3-3 Nuclear Design Report (most recent version referenced in COLR).

4.3-4 General Electric Standard Application for Reactor Fuel, NEDE-24011-P-A, and Supplement for United States, NEDE-24011-P-A-US (most recent approved version referenced in COLR).

4.3-5 GEH/GNF Company Proprietary, "Energy Northwest Columbia Generating Station Neutron Fluence Projection," 005N1411, November 2019. (CVI 1012-00,21)

4.3-6 GE Hitachi Nuclear Energy Proprietary, "Pressure-Temperature Curves Report for Energy Northwest Columbia Generating Station 60 Year Plant License Extension," 005N4603, November 2020. (CVI 1012-00,23)

4.3-7 Supplemental Reload Licensing Report for Columbia (most recent version referenced in COLR).

4.3-8 Fuel Bundle Information Report for Columbia (most recent version referenced in COLR).

4.3-9 Deleted.

4.3-10 GE Nuclear Energy, "Licensing Topical Report, General Electric Methodology for Reactor Pressure Vessel Fast Neutron Flux Evaluations," NEDC-32983P-A, Revision 2, January 2006.

4.3-11 Deleted.

4.3-12 GE Nuclear Energy, Washington Public Power Supply System Nuclear Project 2, "WNP-2 Power Uprate Transient Analysis Task Report," GE-NE-208-08-0393, September 1993.

4.3-13 GE Nuclear Energy, "Licensing Topical Report, General Electric Methodology for Reactor Pressure Vessel Fast Neutron Flux Evaluations," NEDC-32983-P-A, December 2001.

4.3-14 GE-Hitachi Nuclear Energy, "Safety Analysis Report for Columbia Generating Station Thermal Power Optimization," NEDC-33853P, March 2016.

Table 4.3-1

Key Flux and Fluence Results

Component	Flux (n/cm^2 s)	OLTP Fluence[1] (n/cm^2)			CLTP Fluence[2] (n/cm^2)
		31 EFPY	43 EFPY	54 EFPY	
RPV (Peak)	6.16E+08	7.62E+17	1.00E+18	1.22E+18	1.28E+18
RPV (Midplane)	4.60E+08	6.29E+17	8.07E+17	9.72E+17	1.01E+18
Shroud (Peak)	1.35E+12	1.64E+21	2.15E+21	2.63E+21	2.75E+21
Top Guide	1.84E+13	1.17E+22	1.87E+22	2.53E+22	2.70E+22
Core Plate	6.55E+11	3.16E+20	5.69E+20	8.03E+20	8.63E+20
Jet Pump Risers	1.31E+11	1.61E+20	2.11E+20	2.58E+20	2.70E+20
Capsule at 30°	3.99E+08	N/A	N/A	N/A	N/A
Capsule at 120°	3.97E+08	N/A	N/A	N/A	N/A

1 Calculated using EFPY values based on OLTP power level of 3,323 MWt
2 Calculated using EFPY values based on CLTP of each historical cycle and 3,544 MWt for projected cycles.

Table 4.3-2

DELETED

Table 4.3-3

Neutronic Design Values

Parameter	Value
Core data	
Number of fuel assemblies	764
Rated power, MWt	3544
Rated core flow, Mlbm/hr	108.5
Core inlet enthalpy, Btu/lbm	528.5
Reactor dome pressure, psia	1035
Fuel assembly pitch, in.	6.00
Control rod data[a]	
Absorber material	B_4C
Total blade span, in.	9.75
Total blade support span, in.	1.58
Blade thickness	0.260
Blade face-to-face internal dimension, in.	0.200
Absorber rods per blade	76
Absorber rods outside diameter, in.	0.188
Absorber rods inside diameter, in.	0.138
Absorber density, % of theoretical	70.0

[a] Original equipment control rods. Some of the control blades are replaced with Duralife 215 and Marathon control blades.

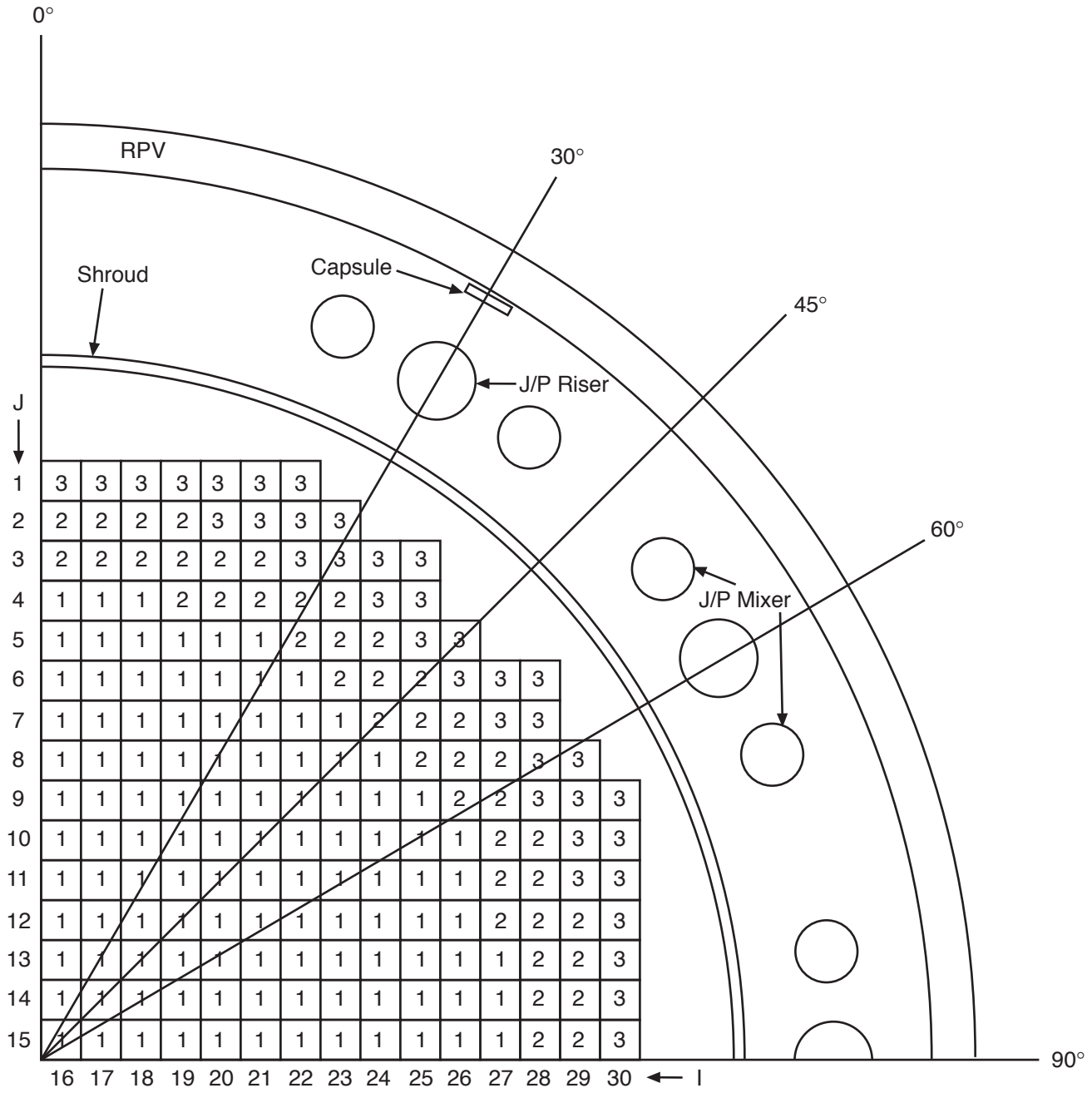

Columbia Generating Station Final Safety Analysis Report	Core Layout and Vessel Internal Components		
	Draw. No. 960690.10	Rev.	Figure 4.3-1

4.4 THERMAL-HYDRAULIC DESIGN

4.4.1 DESIGN BASES

4.4.1.1 Safety Design Bases

See Appendix A, subsection A.4.4.1.1 of Reference 4.4-1.

4.4.1.2 Requirements for Steady-State Conditions

See Appendix A, subsection A.4.4.1.2 of Reference 4.4-1.

For purposes of maintaining adequate thermal margin during normal steady-state operation, the minimum critical power ratio (MCPR) must not be less than the required MCPR operating limit, and the maximum linear heat generation rate (MLHGR) must be maintained below the design linear heat generation rate (LHGR) for the plant. This does not specify the operating power nor does it specify peaking factors. These parameters are determined subject to a number of constraints including the thermal limits given previously. The core and fuel design basis for steady-state operation (i.e., MCPR and LHGR limits) have been defined to provide margin between the steady-state operating conditions and any fuel damage condition to accommodate uncertainties and to ensure that no fuel damage results even during the worst anticipated transient condition at any time in life.

4.4.1.3 Requirements for Anticipated Operational Occurrences (AOOs)

See Appendix A, subsection A.4.4.1.3 of Reference 4.4-1.

4.4.1.4 Summary of Design Bases

See Appendix A, subsection A.4.4.1.4 of Reference 4.4-1, and Reference 4.4-4.

4.4.2 DESCRIPTION OF THERMAL-HYDRAULIC DESIGN OF REACTOR CORE

See Appendix A, subsection A.4.4.2 of Reference 4.4-1.

4.4.2.1 Summary Comparison

An evaluation of plant performance from a thermal and hydraulic standpoint is provided in Section 4.4.3. A tabulation of thermal and hydraulic parameters of the core is given in Table 4.4-1. Any changes for reload cores will be indicated in the Supplemental Reload Licensing Report (Reference 4.4-4).

4.4.2.2 Critical Power Ratio

See Appendix A, subsection A.4.4.2.2 of Reference 4.4-1 and Reference 4.4-2.

4.4.2.3 Linear Heat Generation Rate

See Appendix A, subsection A.4.4.2.3 of Reference 4.4-1 and Reference 4.4-2.

4.4.2.4 Void Fraction Distribution

See Appendix A, subsection A.4.4.2.4 of Reference 4.4-1 and Reference 4.4-3.

4.4.2.5 Core Coolant Flow Distribution and Orificing Pattern

Correct distribution of core coolant flow among the fuel assemblies is accomplished by the orifices fixed at the inlet of each fuel assembly in the fuel support pieces. The orifices control the flow distribution and, hence, the coolant conditions within prescribed bounds throughout the design range of core operation. The sizing and design of the orifices ensure stable flow in each fuel assembly during normal operating conditions.

The core is divided into two orifice flow zones. The outer zone is a narrow, reduced-power region around the core periphery. The inner zone is the core central region. No other flow or steam distribution, other than that provided by adjusting power distribution with control rods, is used or needed.

4.4.2.5.1 Flow Distribution Data Comparison

Design core flow calculations were made using the design power distributions. The flow distribution to the fuel assemblies was calculated based on the assumption that the pressure drop across all of the fuel assemblies is the same. This assumption has been confirmed by measuring the flow distribution in BWRs. Therefore, there is a reasonable assurance that the calculated flow distribution throughout the core is in close agreement with the actual flow distribution (Reference 4.4-1).

4.4.2.5.2 Effect of Channel Flow Uncertainties on the MCPR Uncertainty

The channel flow uncertainty has been inherently considered in its contribution to the MCPR uncertainty when evaluating the probability of a fuel rod subject to a boiling transition in establishing the $MCPR_{99.9\%}$.

The channel flow uncertainty is not an independent parameter contributing to the MCPR uncertainty. Its effect has been included in evaluating the probability of a boiling transition during a core wide power and flow calculation.

4.4.2.6 Core Pressure Drop and Hydraulic Loads

See Appendix A, subsection A.4.4.2.6 of Reference 4.4-1 and Reference 4.4-2.

4.4.2.7 Correlation and Physical Data

See Appendix A, subsection A.4.4.2.7 of Reference 4.4-1 and Reference 4.4-2.

4.4.2.8 Thermal Effects of Operational Transients

See Appendix A, subsection A.4.4.2.8 of Reference 4.4-1 and Reference 4.4-2.

4.4.2.9 Uncertainties in Estimates

See Appendix A, subsection A.4.4.2.9 of Reference 4.4-1 and Reference 4.4-2.

4.4.2.10 Flux Tilt Considerations

See Appendix A, subsection A.4.4.2.10 of Reference 4.4-1.

4.4.3 DESCRIPTION OF THE THERMAL AND HYDRAULIC DESIGN OF THE REACTOR COOLANT SYSTEM

4.4.3.1 Plant Configuration Data

4.4.3.1.1 Reactor Coolant System Configuration

The reactor coolant system is described in Section 5.4 and shown in isometric perspective in Figure 5.4-1. The piping sizes, fittings, and valves are listed in Table 5.4-2.

4.4.3.1.2 Reactor Coolant System Thermal Hydraulic Data

The steady-state distribution of temperature, pressure, and flow rate for each flow path in the reactor coolant system is shown in Figure 5.1-1.

4.4.3.1.3 Reactor Coolant System Geometric Data

Coolant volumes of regions and components within the reactor vessel are shown in Figure 5.1-2.

Table 4.4-3 provides the flow path length, height, liquid level, minimum elevations, and minimum flow areas for each major flow path volume within the reactor vessel and recirculation loops of the reactor coolant systems.

Table 4.4-4 provides the lengths and sizes of all safety injection lines to the reactor coolant system.

4.4.3.2 Operating Restrictions on Pumps

Expected recirculation pump performance curves are shown in Figures 5.4-2 and 5.4-7. These curves are valid for all conditions with a normal operating range varying from approximately 25% to 105% of rated pump flow.

The pump characteristics, including considerations of net positive suction head (NPSH) requirements, are the same for the conditions of two-pump and one-pump operation as described in Section 5.4.1. Subsection 4.4.3.3 gives the operating limits imposed on the recirculation pumps by cavitation, pump loads, bearing design flow starvation, and pump speed.

4.4.3.3 Power-Flow Operating Map

4.4.3.3.1 Limits for Normal Operation

The power-flow operating map for the power range of operation is shown in Figure 4.4-1. The boundaries of this map are as follows.

a. Natural circulation line: The operating state of the reactor moves along this line for the normal control rod withdrawal sequence in the absence of recirculation pump operation,

b. Maximum Extended Load Line Limit Analysis (MELLLA) Boundary: The line passes through 100% power at 82.7% core flow,

c. Rated power line: Constant 100% power line,

d. ICF line: Constant 106% increased core flow line, and

e. Pump cavitation interlock line: This line is required to protect either the recirculation pumps or the jet pumps from cavitation damage.

4.4.3.3.2 Regions of the Power-Flow Map

a. Region I — This region defines the system startup operational capability with the recirculation pumps and motors being driven by the adjustable speed drives (ASDs). Flow is controlled by the variable speed pump, and power changes during normal startup and shutdown will be in this region;

b. Region II — This is the low power area of the operating map where cavitation can be expected in the recirculation pumps and jet pumps. Operation within this region is precluded by system interlocks that run back the pumps to minimum speed; and

c. Region III — This represents the normal operating zone of the map where power changes can be made by either control rod movement or by core flow changes through use of the variable speed pumps.

4.4.3.3.3 Design Features for Power-Flow Control

The following limits and design features are employed to maintain power-flow conditions to the required values shown in Figure 4.4-1:

a. Minimum power limits at intermediate and high core flows. To prevent cavitation in the recirculation pumps and jet pumps, the recirculating system is provided with an interlock to run back the pump speed to 15 Hz if the difference between steam line temperature and recirculation pump inlet temperature is less than a preset value (10.7°F). This action is initiated electronically through a time delay.

b. Minimum power limit at low core flow. During low power, low loop flow operations, the temperature differential interlock provides cavitation protection. Activation of the temperature differential interlock will run back the pump speed to 15 Hz. The ASD output speed/frequency is measured by instrumentation provided for monitoring the ASD. The speed change action is electronically initiated.

c. Pump bearing limit. For pumps as large as the recirculation pumps, practical limits of pump bearing design require that minimum pump flow be limited to 25% of rated. To ensure this minimum flow, the system is designed so that the minimum pump speed will allow this rate of flow.

d. Valve position. To prevent structural or cavitation damage to the recirculation pump due to pump suction flow starvation, the system is provided with an interlock to prevent starting the pumps or to trip the pumps if the suction or discharge block valves are at less than 90% open position. This circuit is activated by a position limit switch and is active before the pump is started, during individual loop manual control mode, or during ganged loop manual control.

The cavitation limits are established for two-pump operation, but will not protect the jet pumps and recirculation pumps on one-pump operation. Therefore, additional procedural operational limits are established to prevent cavitation damage during the single loop operation. One-pump operation is restricted to the Extended Load Line Limit Analysis (108% rodline) boundary because extended operation in the MELLLA domain has not been evaluated. The procedural operational limits are shown in Figure 4.4-2.

Flow Control. The principal modes of normal operation with ASD flow control are summarized as follows: The recirculation pumps are started when the suction and discharge block valves are full open; with the pump speed at 15 Hz the reactor heatup and pressurization can commence. When operating pressure has been established, reactor power can be increased. This power-flow increase will follow a line within Region I of the flow control map shown in Figure 4.4-1.

When reactor power is greater than approximately 20% of rated, the steam line to recirculation pump inlet differential temperature low feedwater flow interlock is cleared and the main

recirculation pump speed can be manually increased from 15 Hz. The system is then brought to the desired power-flow level within the normal operating area of the map (Region III) by individual loop control or manual ganged control of the ASD system output frequency and by withdrawing control rods.

Recirculation pump speed increases resulting from ASD system output frequency increases toward 63 Hz with constant control rod position will result in power/flow changes along, or nearly parallel to, the 100% rod line.

4.4.3.4 Temperature-Power Operating Map

Not applicable.

4.4.3.5 Load-Following Characteristics

The automatic load following feature has been deleted from the system. All load increases or decreases on CGS are manually controlled by the operator.

4.4.3.6 Thermal and Hydraulic Characteristics Summary Table

The thermal-hydraulic characteristics are provided in Table 4.4-1 for the core and tables of Section 5.4 for other portions of the reactor coolant system.

4.4.4 EVALUATION

See Appendix A, subsections A.4.4.4 – A.4.4.4.5 of Reference 4.4-1 and Reference 4.4-2.

4.4.4.1 Bypass Flow

Reference 4.4-3 shows the bypass flows for the GNF2 core.

4.4.4.2 Thermal Hydraulic Stability Analysis

Core thermal-hydraulic analyses are performed in accordance with the Long-Term Stability Solutions Option III methodology described in Reference 4.4-1. The analysis supporting the OPRM System Period Based Detection Algorithm (PBDA) setpoints is presented in Reference 4.4-4. A backup stability protection may be used on an interim basis as allowed by Technical Specifications. The analysis supporting the backup stability protection is presented in Reference 4.4-4, and the methods used in the backup stability protection analysis are presented in Reference 4.4-1.

4.4.5 TESTING AND VERIFICATION

See Appendix A, subsection A.4.4.5 of Reference 4.4-1.

4.4.6 INSTRUMENTATION REQUIREMENTS

See Appendix A, subsection A.4.4.6 of Reference 4.4-1.

4.4.6.1 Loose Parts

The instrumentation for online monitoring for loose parts in the reactor vessel has been deactivated.

See Section 7.7.1.12 for further information.

4.4.7 REFERENCES

4.4-1 General Electric Company, General Electric Standard Application for Reactor Fuel, NEDE-24011-P-A, and Supplement for United States, NEDE-24011-P-A-US (most recent approved version referenced in COLR).

4.4-2 "GNF2 Advantage Generic Compliance with NEDE-24011-P-A (GESTAR II)," NEDC-33270P, (most recent version referenced in COLR).

4.4-3 Global Nuclear Fuel, "GNF2 Thermal Hydraulic Compatibility with Columbia Generating Station Legacy Fuel," 002N3118, Revision 0, December 2014.

4.4-4 Supplemental Reload Licensing Report for Columbia (most recent version referenced in COLR).

4.4-9 GEXL97 Correlation Applicable to ATRIUM-10 Fuel, NEDC-33419P, Revision 0, June 2008.

4.4-10 Methodology and Uncertainties for Safety Limit MCPR Evaluations, NEDC-32601P-A, August 1999.

4.4-11 Power Distribution Uncertainties for Safety Limit MCPR Evaluations, NEDC-32694P-A, August 1999.

4.4-12 Fuel Bundle Information Report for Columbia (most recent version referenced in COLR).

Table 4.4-1

Thermal and Hydraulic Design Characteristics
of the Reactor Core

General Operating Conditions	Parameter
Reference design thermal output, MWt	3544
Power level for engineered safety features, MWt	3702[1]
Steam flow rate, at 422.1°F final feedwater temperature, millions lb/hr	15.28
Core coolant flow rate range, millions lb/hr	89.7-115
Feedwater flow rate, millions lb/hr	15.25
System pressure, nominal in steam dome, psia	1035
Core exit pressure, nominal, psia	1050
Coolant saturation temperature at core design pressure, °F	551
Average power density, kW/liter	52.40
Average linear heat generation rate, kW/ft	4.18
Core total heat transfer area, ft^2	86,499
Core total heat transfer area, ft^2	134,750
Design operating minimum critical power ratio (MCPR)	(see COLR)[2]
Core inlet enthalpy at 422.1°F FFWT, Btu/lb	528.5
Core inlet temperature, at 422.1°F FFWT, °F	533.6
Core total heat transfer area, ft^2	72.4
Core total heat transfer area, ft^2	121.5[3]
Core pressure drop, psid	22.939[3]

[1] Per data on page 18 of NEDC-32141P, Power Uprate with Extended Load Line Limit Safety Analysis for WNP-2, June 1993.
[2] Core Operating Limits Report
[3] Based on full core of GNF2, (1035 psia dome pressure, 3544 MW_t power and 108.5 Mlbm/hr (100% of rated core flow)).

Table 4.4-2

Deleted

Table 4.4-3

Reactor Coolant System Geometric Data

	Flow Path Length (in.)	Height and Liquid Level (in.)	Elevation of Bottom of Each Volume[a]	Minimum Flow Areas (ft^2)
Lower plenum	216	216 216	-172.5	71.5
Core	164	164 164	44.0	142.0
Upper plenum and separators	178	178 178	208.0	49.5
Dome (above normal water level)	312	312 0	386.0	343.5
Downcomer area	321	321 321	-51.0	79.5
Recirculation loops and jet pumps (one loop)	108.5 ft	403 403	-394.5	132.5 in^2

[a] Reference point is recirculation nozzle outlet centerline.

Table 4.4-4

Lengths and Sizes of Safety Injection Lines

	Line O.D. (in.)	Line Length (ft)
HPCS line		
Pump discharge to valve[a]	16	319
From HPCS-V-4 inside containment to RPV	12.75	108
Total		427
LPCI lines		
Loop A		
1. Pump discharge to reducer	18	421
2. Reducer to injection valve,[a] RHR-V-42A	14	6
3. From RHR-V-42A to RPV	14	94
Total		521
Loop B		
1. Pump discharge to reducer	18	394
2. Reducer to injection valve RHR-V-42B	14	6
3. Inside containment to RPV	14	93
Total		493
Loop C		
1. Pump discharge to reducer	18	71
2. Reducer to injection valve RHR-V-42C	14	138
3. Inside containment to RPV	14	99
Total		308
LPCS line		
Pump discharge to valve[a]	16	222
Inside containment to RPV	12.75	117
Total		339

[a] Injection valve located as near as possible to outside of containment wall.

Table 4.4-5

Deleted

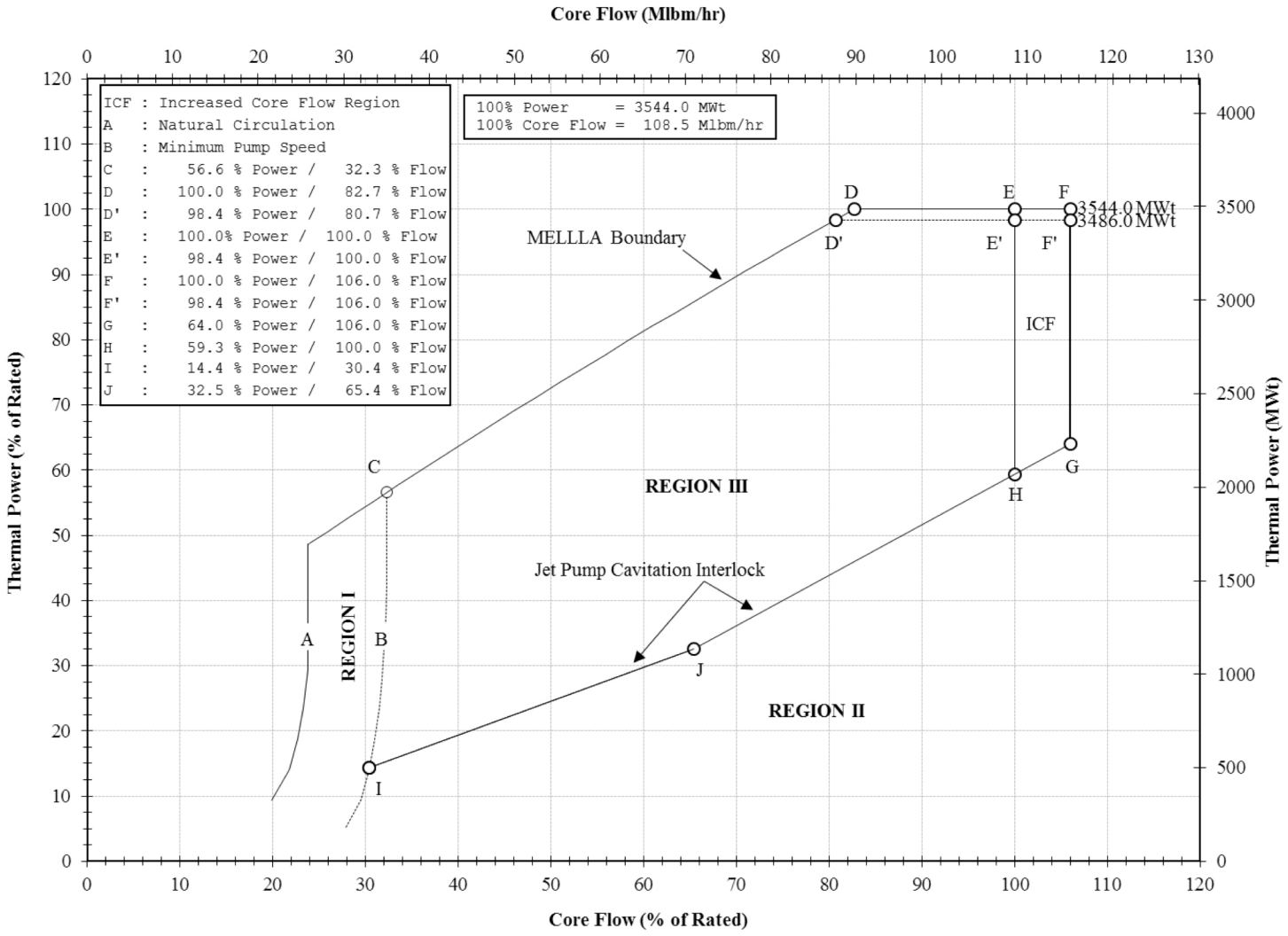

Columbia Generating Station Final Safety Analysis Report	**Power-Flow Operating Map Two Loop Operation**		
	Draw. No. 960690.03	**Rev. 2**	**Figure 4.4-1**

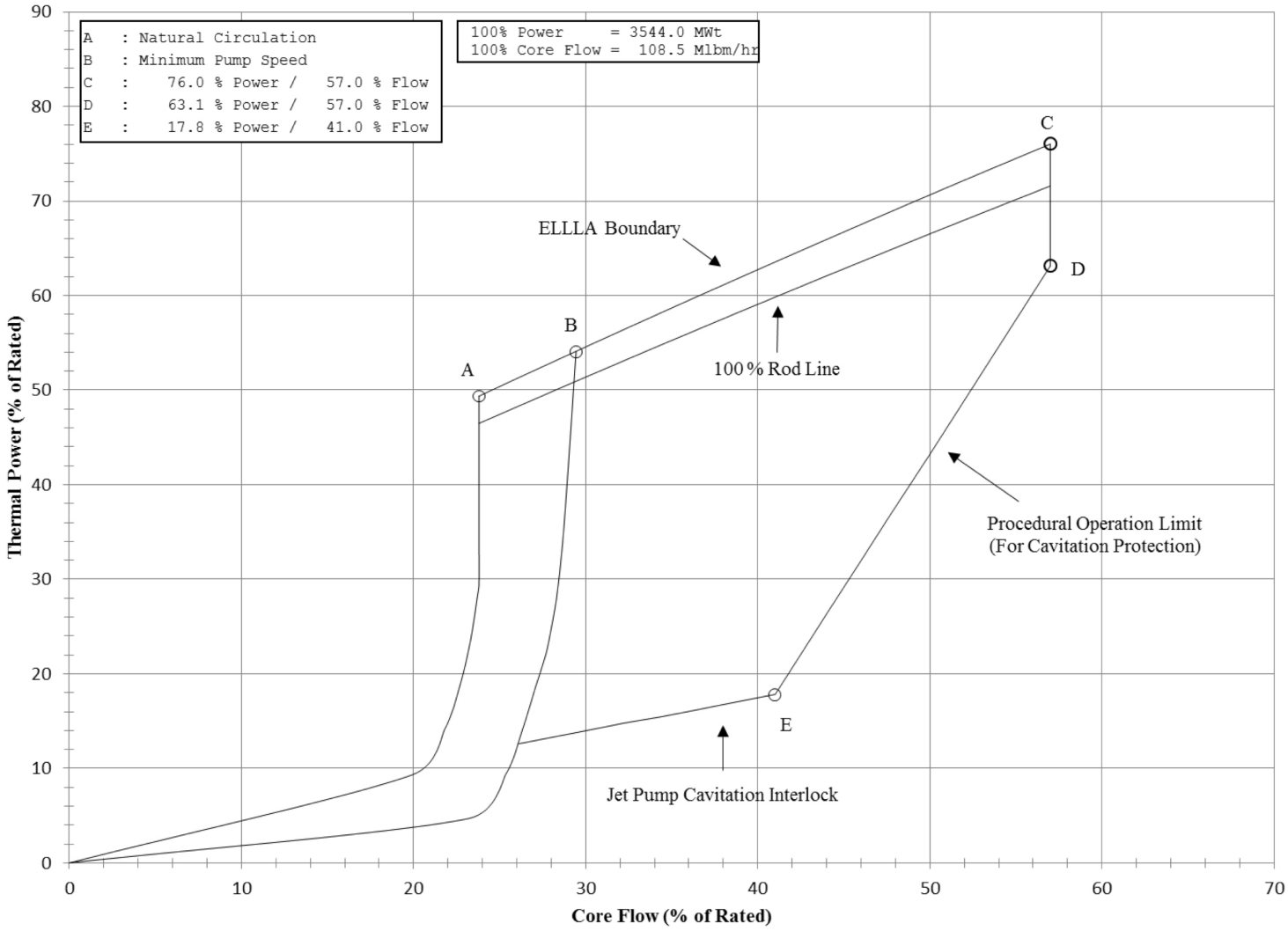

Columbia Generating Station Final Safety Analysis Report	Power-Flow Operating Map Single Loop Operation		
	Draw. No. 060108.05	Rev. 2	Figure 4.4-2

4.5 REACTOR MATERIALS

4.5.1 CONTROL ROD SYSTEM STRUCTURAL MATERIALS

4.5.1.1 Material Specifications

The following material listing applies to the control rod drive (CRD) mechanism supplied for this application. The position indicator and minor nonstructural items are omitted.

a. Cylinder, tube, and flange assembly

Flange	ASME SA 182 grade F304
Housing cap screws	ASME SA 540 grade B23, CL4 or SA 193 grade B7
Plugs	ASME SA 182 grade F304
Cylinder	ASTM A269 grade TP 304
Outer tube	ASTM A269 grade TP 304
Tube	ASTM A269 grade TP 304
Spacer	ASTM A269 grade TP 304 or ASTM A511 grade MT 304

b. Piston tube assembly

Piston tube	ASTM A269 grade TP 304 or ASTM A479 grade XM-19
Stud	ASTM A276 type 304
Head/base	ASME SA 182 grade F304
Indicator tube	ASME SA 312 type 316
Cap	ASME SA 182 grade F304 or TP 316

c. Drive assembly

Coupling spud	Inconel X-750
Index tube	ASTM A269 grade TP 304 or ASTM A479 grade XM-19

Piston head	Armco 17-4 PH
Coupling	ASME SA 312 grade TP 304 or ASTM A511 grade MT 304
Magnet housing	ASME SA 312 grade TP 304 or ASTM A511 grade MT 304

d. Collet assembly

Collet piston	ASTM A269 grade TP 304 or ASME SA 312 grade TP 304
Finger	Inconel X-750
Retainer	ASTM A269 grade TP 304 or ASTM A511 grade MT 304
Guide cap	ASTM A269 grade TP 304

e. Miscellaneous parts

Stop piston	ASTM A276 type 304
Connector	ASTM A276 type 304
O-ring spacer	ASME SA 240 type 304
Piston tube nut	ASME SA 194 grade B8 or B8A or SA 479 grade XM-19
Barrel	ASTM A269 grade TP 304 or ASME SA 312 grade TP 304 or ASME SA 240 type 304
Collet spring	Inconel X-750
Ring flange	ASME SA 182 grade F304
Ring flange cap screws	ASME SA 193 grade B6

The materials listed under ASTM specification numbers are all in the annealed condition (with the exception of the outer tube in the cylinder, tube, and flange assembly), and their properties

are readily available. The outer tube is approximately 1/8 hard and has a tensile strength of 90,000/125,000 psi, yield strength of 50,000/85,000 psi, and minimum elongation of 25%.

The coupling spud, collet fingers, and collet spring are fabricated from Inconel X-750 in the annealed or equalized condition and heat treated to produce a tensile strength of 165,000 psi minimum, yield of 105,000 psi minimum, and elongation of 20% minimum. The piston head is Armco 17-4 PH in condition H-1100, with a tensile strength of 140,000 psi minimum, yield of 115,000 psi minimum, and elongation of 15% minimum.

These are widely used materials, whose properties are well known. The parts are readily accessible for inspection and replacement if necessary.

4.5.1.2 Special Materials

No cold-worked austenitic stainless steels with a yield strength greater than 90,000 psi are employed in the CRD system. Armco 17-4 PH (precipitation hardened stainless steel) is used for the piston head. This material is aged to the H-1100 condition to produce resistance to stress corrosion cracking in the BWR environments. Armco 17-4 PH (H-1100) has been successfully used in the past in BWR drive mechanisms. The only hardenable martensitic stainless steel used is the ring flange cap screws. The material is TP 410 in the H-1100 condition.

4.5.1.3 Processes, Inspections, and Tests

All austenitic stainless steel used in the CRD system is solution annealed material with one exception, the outer tube in the cylinder, tube, and flange assembly (see Section 4.5.1.1). Proper solution annealing is verified by testing per ASTM A262, "Recommended Practices for Detecting Susceptibility to Intergranular Attack in Stainless Steels."

Two special processes are employed which subject selected components to temperatures in the sensitization range. These processes are performed on austenitic stainless steel, including XM-19.

a. The cylinder (cylinder, tube, and flange assembly) and the retainer (collet assembly) are hard surfaced with Colmonoy 6.

b. The following components are nitrided to provide a wear resistant surface:

1. Tube (cylinder, tube, and flange assembly)
2. Piston tube (piston tube assembly)
3. Index tube (drive line assembly)
4. Collet piston and guide cap (collet assembly)

Colmonoy hard-surfaced components have performed successfully in the past in drive mechanisms. Nitrided components have accumulated many years of BWR service. It is normal practice to remove some CRDs periodically during refueling outages. At this time, both the Colmonoy hard-surfaced parts and nitrided surfaces are accessible for visual examination. In addition, dye penetrant examinations have been performed on nitrided surfaces of the longest service drives. This inspection program is adequate to detect any incipient defects before they could become serious enough to cause operating problems.

All austenitic stainless steel is required to be in the solution heat treated condition. Welding is performed in accordance with Section IX of the ASME Boiler and Pressure Vessel (B&PV) Code. Heat input for stainless-steel welds is restricted to a maximum of 50,000 joules/in. and interpass temperature to 350°F. Heating above 800°F (except for welding) is prohibited unless the welds are subsequently solution annealed. These controls are employed to avoid severe sensitization and comply with the intent of Regulatory Guide 1.44.

4.5.1.4 Control of Delta Ferrite Content

All type 308 weld metal is required to comply with a specification which requires a minimum of 5% delta ferrite. This amount of ferrite is adequate to prevent any micro-fissuring (hot cracking) in austenitic stainless steel welds. (See Section 4.5.2.4.)

4.5.1.5 Protection of Materials During Fabrication, Shipping, and Storage

All the CRD parts listed in Section 4.5.1.1 are fabricated under a process specification which limits contaminants in cutting, grinding, and tapping coolants and lubricants. It also restricts all other processing materials (marking inks, tape, etc.) to those which are completely removable by the applied cleaning process. All contaminants are then required to be removed by the appropriate cleaning process prior to any of the following:

a. Any processing which increases part temperature above 200°F,
b. Assembly which results in decrease of accessibility for cleaning, and
c. Release of parts for shipment.

The specification for packaging and shipping the CRD provides for the following:

The drive is rinsed in hot deionized water and dried in preparation for shipment. The ends of the drive are then covered with a vapor tight barrier with desiccant. Packaging is designed to protect the drive and prevent damage to the vapor barrier. The planned storage period considered in the design of the container and packaging is 2 years. This packaging has been in use for a number of years. Periodic audits have indicated satisfactory protection.

The degree of surface cleanliness required by these procedures meets the requirements of Regulatory Guide 1.37.

Site or warehouse storage specifications require inside heated storage comparable to level B of ANSI 45.2.2.

4.5.2 REACTOR INTERNAL MATERIALS

4.5.2.1 Material Specifications

Materials used for the core support structure:

a. Shroud support - Nickel chrome iron alloy, ASME SB166 or SB168,

b. Shroud, core plate (and aligners), top guide (and aligners), core plate wedges, and internal structures welded to these components, ASME SA240, SA182, SA479, SA312, SA249, or SA213 (all type 304, except the shroud which is 304L, and the core plate wedges which are type 316),

c. Peripheral fuel supports - SA312 type 304,

d. Core plate studs and nuts. SA193 grade B8, SA194 grade 8 (all type 304),

e. Control rod drive housing. ASME SA312 type 304, SA182 type 304,

f. Control rod drive guide tube. ASME SA351 type CF8, SA358. SA312, SA249 (type 304), and

g. Orificed fuel support. ASME SA351 type CF8.

Materials used in the steam separators and steam dryers:

a. All materials are type 304 stainless steel,
b. Plate, sheet, and strip ASTM A240, type 304,
c. Forgings ASTM A182, grade F304,
d. Bars ASTM A479, type 304,
e. Pipe ASTM A312, grade TP 304,
f. Tube ASTM A269, grade TP 304,
g. Bolting material ASTM A193, grade B8,
h. Nuts ASTM A194, grade 8, and
i. Castings ASTM A351, grade CF8.

Materials used in the jet pump assemblies:

The components in the jet pump assemblies are a riser, restrainer brackets, inlet-mixers, slip joint clamps, diffusers, and a riser brace. Materials used for these components are to the following specifications:

a.	Castings	ASTM A351 grade CF 8 and ASME SA351 grade CF3,
b.	Bars	ASTM A276 type 304 and ASTM A370 grade E38 and E55,
c.	Bolts	ASTM A193 grade B8 or B8M,
d.	Sheet and plate	ASTM A240 type 304, ASTM A276 type 304, ASTM A358, and ASME SA240 type 304L,
e.	Tubing	ASTM A269 grade TP 304,
f.	Pipe	ASTM A358 type 304 and ASME SA312 grade TP 304,
g.	Welded fittings	ASTM A403 grade WP304, and
h.	Forgings	ASME SA182 grade F304, ASTM B166, and ASTM A637 grade 688.

Materials in the jet pump assemblies which are not type 304 stainless steel are listed below:

a. The inlet mixer adapter casting, the wedge casting, bracket casting adjusting screw casting, and the diffuser collar casting are type 304 hard-surfaced with Stellite 6 for slip fit joints;

b. The diffuser is a bimetallic component made by welding a type 304 forged ring to a forged Inconel 600 ring, made to Specification ASTM B166;

c. The inlet-mixer contains a pin, inserts and beam made of Inconel X-750 to Specification ASTM B637 grade UNS N07750 (Beam), and ASTM A370 grade E38 and E55 (pin and insert);

d. The jet pump beam bolt is type 316L stainless steel;

e. The jet pump slip joint clamp body is fabricated from solution heat-treated ASTM A-182/ASME SA-182 Grade F XM-19 stainless steel with a maximum of 0.04% carbon;

f. The jet pump slip joint clamp adjustable bolt, bolt retainer, pins, and ratchet lock spring are fabricated from ASTM B-637/ASME SB-637 UNS N07750 Type 3 (Alloy X-750); and

g. All components of jet pump restrainer bracket auxiliary wedge assemblies are fabricated from ASTM B-637 UNS N07750 Type 3 (Alloy X-750), except for the frame.

All core support structures are fabricated from ASME specified materials and designed using ASME Code Section III, Appendix I allowable stresses, and ASME Code Section III, Class I, reactor vessel design rules as guides. The other reactor internals are fabricated from ASTM specification materials. Material requirements in the ASTM specifications are identical to requirements in corresponding ASME material specifications. The allowable stress levels specified in ASME Code Section III, Appendix I, are used as a guide in the design of all internal structures in the reactor.

4.5.2.2 Controls on Welding

For core support structures and other internals, weld procedures and welders are qualified in accordance with the ASME B&PV Code, Section IX.

4.5.2.3 Nondestructive Examination of Wrought Seamless Tubular Products

Wrought seamless tubular products are used in the fabrication of the CRD housing. This ASME Code Section III component is designed to the rules of Subsection NB, and the material specified is ASME SA-312 supplemented by GE specifications which invoke Subsection NB requirements. This material meets the requirements of NB-2550 and meets the intent of Regulatory Guide 1.66. The CRD housings are built to the 1971 Edition, Summer 1971 Addenda of the code.

Other internal non-code safety and non-safety components are optionally fabricated from wrought seamless tubular products. This material is supplied in accordance with the applicable ASTM material specifications and is nondestructively examined to the extent specified therein. In addition, the specification for tubular products employed for CRD housings external to the reactor pressure vessel (RPV) meet requirements of paragraph NB-2550 which meets the intent of Regulatory Guide 1.66.

Other internals are non-coded, and wrought seamless tubular products were supplied in accordance with the applicable ASTM material specifications. These specifications require a hydrostatic test on each length of tubing.

4.5.2.4 Fabrication and Processing of Austenitic Stainless Steel - Regulatory Guide Conformance

Regulatory Guide 1.31, Control of Stainless Steel Welding

All austenitic stainless steel weld filler materials were supplied with a minimum of 5% delta ferrite. This amount of ferrite is considered adequate to prevent micro-fissuring in austenitic stainless steel welds. An extensive test program performed by General Electric Company, with the concurrence of the Regulatory Staff, has demonstrated that controlling weld filler metal ferrite at 5% minimum produces production welds which meet the requirements of Regulatory Guide 1.31. A total of approximately 400 production welds in five BWR plants were measured and all welds met the requirements of the Interim Regulatory Position to Regulatory Guide 1.31.

Regulatory Guide 1.34, Control of Electroslag Weld Properties.

Electroslag welding is not employed for any reactor internals.

Regulatory Guide 1.36, Nonmetallic Thermal Insulation for Austenitic Stainless Steel.

Nonmetallic thermal insulation is not employed for any components in the reactor vessel. For external applications, all nonmetallic insulation meets the requirements of Regulatory Guide 1.36.

Regulatory Guide 1.44, Control of the Use of Sensitized Stainless Steel.

All wrought austenitic stainless steel was solution heat treated. Heating above 800°F was prohibited (except for welding) unless the stainless steel was subsequently solution annealed. Purchase specifications restricted the maximum weld heat input to 110,000 joules per in., and the weld interpass temperature to 350°F maximum. Welding was performed in accordance with Section IX of the ASME B&PV Code Section IX. These controls were employed to avoid severe sensitization and comply with the intent of Regulatory Guide 1.44.

Regulatory Guide 1.71, Welder Qualification for Areas of Limited Accessibility

Welder qualification for areas of limited accessibility is discussed in Sections 1.8.2 and 1.8.3.

4.5.2.5 Contamination, Protection, and Cleaning of Austenitic Stainless Steel

Exposure to contaminant was avoided by carefully controlling all cleaning and processing materials which contact stainless steel during manufacture and construction. Any inadvertent surface contamination was removed to avoid potential detrimental effects.

Special care was exercised to ensure removal of surface contaminants prior to any heating operation. Water quality for rinsing, flushing, and testing was controlled and monitored.

The degree of cleanliness required by these procedures meets the requirements of Regulatory Guide 1.37.

4.5.3 CONTROL ROD DRIVE HOUSING SUPPORTS

The American Institute of Steel Construction (AISC) Manual of Steel Construction, "Specification for the Design, Fabrication, and Erection of Structural Steel for Buildings," was used in designing the CRD housing support system. However, to provide a structure that absorbs as much energy as practical without yielding, the allowable tension and bending stresses used were 90% of yield and the shear stress used was 60% of yield. These design stresses are 1.5 times the AISC allowable stresses (60% and 40% of yield, respectively).

For purposes of mechanical design, the postulated failure resulting in the highest forces is an instantaneous circumferential separation of the CRD housing from the reactor vessel, with the reactor at an operating pressure of 1086 psig (at the bottom of the vessel) acting on the area of the separated housing. The weight of the separated housing, CRD, and blade, plus the pressure of 1086 psig acting on the area of the separated housing, gives a force of approximately 32,000 lb. This force is used to calculate the impact force, conservatively assuming that the housing travels through a 1-in. gap before it contacts the supports. The impact force (109,000 lb) is then treated as a static load in design. The CRD housing supports are designed as Seismic Category I equipment in accordance with Section 3.2.

All CRD housing support subassemblies are fabricated of ASTM A36 structural steel, except for the following items:

a.	Grid	ASTM A441,
b.	Disc springs	Schnerr, type BS-125-71-8,
c.	Hex bolts and nuts	ASTM A307, and
d.	6 x 4 x 3/8 tubes	ASTM A500 grade B.

4.6 FUNCTIONAL DESIGN OF REACTIVITY CONTROL SYSTEMS

Functional design of the control rod drive (CRD) system is discussed below. Functional designs of the recirculation flow control system and the standby liquid control (SLC) system are described in Sections 5.4.1 and 9.3.5, respectively.

4.6.1 INFORMATION FOR THE CONTROL ROD DRIVE SYSTEM

4.6.1.1 Control Rod Drive System Design

4.6.1.1.1 Design Bases

4.6.1.1.1.1 Safety Design Bases. The CRD mechanical system meets the following safety design bases:

a. The design provides for a sufficiently rapid control rod insertion that no fuel damage results from any abnormal operating transient.

b. The design includes positioning devices, each of which individually supports and positions a control rod.

c. Each positioning device

1. Prevents its control rod from initiating withdrawal as a result of a single malfunction,

2. Is individually operated so that a failure in one positioning device does not affect the operation of any other positioning device, and

3. Is individually energized when rapid control rod insertion (scram) is signaled so that failure of power sources external to the positioning device does not prevent other positioning devices' control rods from being inserted.

4.6.1.1.1.2 Power Generation Design Basis. The CRD system design provides for positioning the control rods to control power generation in the core.

4.6.1.1.2 Description

The CRD system controls gross changes in core reactivity by incrementally positioning neutron absorbing control rods within the reactor core in response to manual control signals. It is also required to quickly shut down the reactor (scram) in emergency situations by rapidly inserting withdrawn control rods into the core in response to a manual or automatic signal. The CRD

system consists of locking piston CRD mechanisms, and the CRD hydraulic system (including power supply and regulation, hydraulic control units (HCUs), interconnecting piping, instrumentation and electrical controls).

4.6.1.1.2.1 Control Rod Drive Mechanisms. The CRD mechanism (drive) used for positioning the control rod in the reactor core is a double-acting, mechanically latched, hydraulic cylinder using water as its operating fluid (see Figures 4.6-1 through 4.6-4). The individual drives are mounted on the bottom head of the reactor pressure vessel (RPV). The drives do not interfere with refueling and are operative even when the head is removed from the RPV.

The drives are also readily accessible for inspection and servicing. The bottom location makes maximum utilization of the water in the reactor as a neutron shield and gives the least possible neutron exposure to the drive components. Using water from the condensate treatment system and/or condensate storage tanks as the operating fluid eliminates the need for special hydraulic fluid. Drives are able to utilize simple piston seals whose leakage does not contaminate the reactor water but provides cooling for the drive mechanisms and their seals.

The drives are capable of inserting or withdrawing a control rod at a slow, controlled rate, as well as providing rapid insertion when required. A mechanism on the drive locks the control rod at 6-in. increments of stroke over the length of the core.

A coupling spud at the top end of the drive index tube (piston rod) engages and locks into a mating socket at the base of the control rod. The weight of the control rod is sufficient to engage and lock this coupling. Once locked, the drive and rod form an integral unit that must be manually unlocked by specific procedures before the components can be separated.

The drive holds its control rod in distinct latch positions until the hydraulic system actuates movement to a new position. Withdrawal of each rod is limited by a seating of the rod in its guide tube. Withdrawal beyond this position to the over-travel limit can be accomplished only if the rod and drive are uncoupled. Withdrawal to the over-travel limit is annunciated by an alarm.

The individual rod indicators, grouped in one control panel display, correspond to relative rod locations in the core. A separate, smaller display is located just below the large display on the vertical part of the benchboard. This display presents the positions of the control rod selected for movement and the other rods in the affected rod group.

For display purposes the control rods are considered in groups of four adjacent rods centered around a common core volume. Each group is monitored by four local power range monitor (LPRM) strings (see Section 7.6.1.4). Rod groups at the periphery of the core may have less than four rods. The small rod display shows the positions, in digital form, of the rods in the

group to which the selected rod belongs. A white light indicates which of the four rods is the one selected for movement.

4.6.1.1.2.2 Drive Components. Figure 4.6-2 illustrates the operating principle of a drive. Figures 4.6-3 and 4.6-4 illustrate the drive in more detail. The main components of the drive and their functions are described below.

4.6.1.1.2.2.1 Drive Piston. The drive piston is mounted at the lower end of the index tube. This tube functions as a piston. The drive piston and index tube make up the main moving assembly in the drive. The drive piston operates between positive end stops, with a hydraulic cushion provided at the upper end only. The piston has both inside and outside seal rings and operates in an annular space between an inner cylinder (fixed piston tube) and an outer cylinder (drive cylinder). Because the type of inner seal used is effective in only one direction, the lower sets of seal rings are mounted with one set sealing in each direction.

A pair of nonmetallic bushings prevents metal-to-metal contact between the piston assembly and the inner cylinder surface. The outer piston rings are segmented step-cut seals with expander springs holding the segments against the cylinder wall. A pair of split bushings on the outside of the piston prevents piston contact with the cylinder wall. The effective piston area for down-travel or withdrawal is approximately 1.2 $in.^2$ versus 4.1 $in.^2$ for up-travel or insertion. This difference in driving area tends to balance the control rod weight and ensures a higher force for insertion than for withdrawal.

4.6.1.1.2.2.2 Index Tube. The index tube is a long hollow shaft made of nitrided stainless steel. Circumferential locking grooves, spaced every 6 in. along the outer surface, transmit the weight of the control rod to the collet assembly.

4.6.1.1.2.2.3 Collet Assembly. The collet assembly serves as the index tube locking mechanism. It is located in the upper part of the drive unit. This assembly prevents the index tube from accidentally moving downward. The assembly consists of the collet fingers, a return spring, a guide cap, a collet housing (part of the cylinder, tube, and flange), and the collet piston.

Locking is accomplished by fingers mounted on the collet piston at the top of the drive cylinder. In the locked or latched position the fingers engage a locking groove in the index tube.

The collet piston is normally held in the latched position by a force of approximately 150 lb supplied by a spring. Metal piston rings are used to seal the collet piston from reactor vessel pressure. The collet assembly will not unlatch until the collet fingers are unloaded by a short, automatically sequenced, drive-in signal. A pressure, approximately 180 psi force, slide the collet up against the conical surface in the guide cap, and spread the fingers out so they do not engage a locking groove.

A guide cap is fixed in the upper end of the drive assembly. This member provides the unlocking cam surface for the collet fingers and serves as the upper bushing for the index tube.

If reactor water is used during a scram to supplement accumulator pressure, it is drawn through a filter on the guide cap.

4.6.1.1.2.2.4 Piston Tube. The piston tube is an inner cylinder, or column, extending upward inside the drive piston and index tube. The piston tube is fixed to the bottom flange of the drive and remains stationary. Water is brought to the upper side of the drive piston through this tube. A buffer shaft, at the upper end of the piston tube, supports the stop piston and buffer components.

4.6.1.1.2.2.5 Stop Piston. A stationary piston, called the stop piston, is mounted on the upper end of the piston tube. This piston provides the seal between reactor vessel pressure and the space above the drive piston. It also functions as a positive end stop at the upper limit of control rod travel. Piston rings and bushings, similar to those used on the drive piston, are mounted on the upper portion of the stop piston. The lower end of the stop piston is threaded on to the top of the piston tube forming a space for a set of spring washers which serve to protect both the drive piston and the stop piston from damage as the drive piston reaches its end of travel. The upper end of the piston tube has a series of orifices which hydraulically dampen the drive piston motion as the inner seals (or buffer seals) slide past them, effectively cutting off the exhaust path for the over-piston water. The high pressures generated in the buffer are confined to the cylinder portion of the stop piston, and are not applied to the stop piston and drive piston seals.

The center tube of the drive mechanism forms a well to contain the position indicator probe. The probe is an aluminum extrusion attached to a cast aluminum housing. Mounted on the extrusion are hermetically sealed, magnetically operated, position indicator switches. The entire probe assembly is protected by a thin-walled stainless steel tube. The switches are actuated by a ring magnet located at the bottom of the drive piston.

The drive piston, piston tube, and indicator tube are all of nonmagnetic stainless steel, allowing the individual switches to be operated by the magnet as the piston passes. Two switches are located at each position corresponding to an index tube groove, thus allowing redundant indication at each latching point. Two additional switches are located at each midpoint between latching points to indicate the intermediate positions during drive motion. Thus, indication is provided for each 3 in. of travel. Duplicate switches are provided for the full-in and full-out positions. Redundant over-travel switches are located at a position below the normal full-out position. Because the limit of down-travel is normally provided by the control rod itself as it reaches the backseat position, the drive can pass this position and actuate the over-travel switches only if it is uncoupled from its control rod. A convenient means is

thus provided to verify that the drive and control rod are coupled after installation of a drive or at any time during plant operation.

4.6.1.1.2.2.6 Flange and Cylinder Assembly. A flange and cylinder assembly is made up of a heavy flange welded to the drive cylinder. A sealing surface on the upper face of this flange forms the seal to the drive housing flange. The seals contain reactor pressure and the two hydraulic control pressures. Teflon coated, stainless steel rings are used for these seals. The drive flange contains the integral ball, or two-way, check (ball-shuttle) valve. This valve directs either the reactor vessel pressure or the driving pressure, whichever is higher, to the underside of the drive piston. Reactor vessel pressure is admitted to this valve from the annular space between the drive and drive housing through passages in the flange.

Water used to operate the collet piston passes between the outer tube and the cylinder tube. The inside of the cylinder tube is honed to provide the surface required for the drive piston seals.

Both the cylinder tube and outer tube are welded to the drive flange. The upper ends of these tubes have a sliding fit to allow for differential expansion.

4.6.1.1.2.2.7 Lock Plug. The upper end of the index tube is threaded to receive a coupling spud. The coupling (see Figure 4.6-1) accommodates a small amount of angular misalignment between the drive and the control rod. Six spring fingers allow the coupling spud to enter the mating socket on the control rod. A plug then enters the spud and prevents uncoupling.

Two means of uncoupling are provided. With the reactor vessel head removed, the lock plug can be raised against the spring force of approximately 50 lb by a rod extending up through the center of the control rod to an unlocking handle located above the control rod velocity limiter. The control rod, with the lock plug raised, can then be lifted from the drive.

The lock plug can also be pushed up from below, if it is desired to uncouple a drive without removing the RPV head for access. In this case, the central portion of the drive mechanism is pushed up against the uncoupling rod assembly, which raises the lock plug and allows the coupling spud to disengage the socket as the drive piston and index tube are driven down.

The control rod is heavy enough to force the spud fingers to enter the socket and push the lock plug up, allowing the spud to enter the socket completely and the plug to snap back into place. Therefore, the drive can be coupled to the control rod using only the weight of the control rod. However, with the lock plug in place, a force in excess of 50,000 lb is required to pull the coupling apart.

4.6.1.1.2.3 Materials of Construction. Factors that determine the choice of construction materials are discussed in the following subsections.

4.6.1.1.2.3.1 Index Tube. The index tube must withstand the locking and unlocking action of the collet fingers. A compatible bearing combination must be provided that is able to withstand moderate misalignment forces. The reactor environment limits the choice of materials suitable for corrosion resistance. The column and tensile loads can be satisfied by an annealed, single phase, nitrogen strengthened, austenitic stainless steel. The wear and bearing requirements are provided by malcomizing the complete tube. To obtain suitable corrosion resistance, a carefully controlled process of surface preparation is employed.

4.6.1.1.2.3.2 Coupling Spud. The coupling spud is made of Inconel 750 that is aged for maximum physical strength and the required corrosion resistance. Because misalignment tends to cause chafing in the semispherical contact area, the part is protected by a thin chromium plating (electrolized). This plating also prevents galling of the threads attaching the coupling spud to the index tube.

4.6.1.1.2.3.3 Collet Fingers. Inconel 750 is used for the collet fingers, which must function as leaf springs when cammed open to the unlocked position. Colmonoy 6 hard facing provides a long-wearing surface, adequate for design life, to the area contacting the index tube and unlocking cam surface of the guide cap.

Experience at some operating boiling water reactors (BWR) indicates that failures can occur in the collet fingers of the CRD mechanism. To resolve this problem, some BWR facilities installed a revised collet retainer design. However, CGS does not have the revised collet retainer design. General Electric (GE) has demonstrated by testing and operating experience that the existing CRDs meet all safety and licensing requirements and are expected to give full life performances. However, as a result of examining operating drives, GE has discovered evidence of intergranular stress corrosion cracking (IGSCC) in some CRD drive components and has made design improvements to preclude IGSCC in the future. The spare parts for CRD components purchased by Energy Northwest incorporate this revised design. Along with the other parts of the drive, the collet retainer tube, piston tube, and index tube will be routinely checked and changed out, if necessary, with the parts incorporating the revised design.

4.6.1.1.2.3.4 Seals and Bushings. Carbon Graphite material is selected for seals and bushings on the drive piston and stop piston. The material is inert, has a low friction coefficient when water-lubricated and is resistant to degradation at high temperatures. The Carbon Graphite material is relatively soft, which is advantageous when an occasional particle of foreign matter reaches a seal. The resulting scratches in the seal reduce sealing efficiency until worn smooth, but the drive design can tolerate considerable water leakage past the seals into the reactor vessel.

4.6.1.1.2.3.5 Summary. All drive components exposed to reactor vessel water are made of austenitic stainless steel except the following:

a. Seals and bushings on the drive piston and stop piston are Carbon Graphite material,

b. All springs and members requiring spring action (collet fingers, coupling spud, and spring washers) are made of Inconel-750,

c. The ball check valve is a Haynes Stellite cobalt-base alloy,

d. Elastomeric O-ring seals are ethylene propylene,

e. Metal piston rings are Haynes 25 alloy,

f. Certain wear surfaces are hard faced with Colmonoy 6,

g. Nitriding by a proprietary new malcomizing process and chromium plating are used in certain areas where resistance to abrasion is necessary, and

h. The drive piston head is made of Armco 17-4 PH.

Pressure containing portions of the drives are designed and fabricated in accordance with requirements of the American Society of Mechanical Engineers (ASME) Boiler and Pressure Vessel (B&PV) Code, Section III.

4.6.1.1.2.4 Control Rod Drive Hydraulic System. The CRD hydraulic system (Figure 4.6-5) supplies and controls the pressure and flow to and from the drives through hydraulic control units (HCU). The water discharged from the drives during a scram flows through the HCU to the scram discharge volume (SDV). The water discharged from a drive during a normal control rod positioning operation flows through the HCU, the exhaust header, and is returned to the reactor vessel via the HCUs of nonmoving drives. Each CRD has an associated HCU.

4.6.1.1.2.4.1 Hydraulic Requirements. The CRD hydraulic system design is shown in Figures 4.6-5 and 4.6-6. The hydraulic requirements, identified by the function they perform, are as follows:

a. An accumulator hydraulic charging pressure of approximately 1400 to 1500 psig is required. Flow to the accumulators is required only during scram reset or system startup;

b. Drive water header pressure of approximately 260 psi above reactor vessel pressure is required. A flow rate of approximately 4 gpm to insert a control rod and 2 gpm to withdraw a control rod is required;

c. Cooling water to the drives is required at a flow rate of approximately 0.34 gpm per drive unit. (Cooling water to a drive can be interrupted for short periods without damaging the drive);

d. The SDV is sized to receive and contain all the water discharged by the drives during a scram; a minimum volume of 3.34 gal per drive is required (excluding the instrument volume);

e. Purge water flow to the RPV level instrumentation reference leg backfill system at a flow rate from 0.6 gal/hr to 2.4 gal/hr.

4.6.1.1.2.4.2 System Description. The CRD hydraulic systems provide the required functions with the pumps, filter, valves, instrumentation, and piping shown in Figure 4.6-5 and described in the following.

Duplicate components are included, where necessary, to ensure continuous system operation if an inservice component requires maintenance.

4.6.1.1.2.4.2.1 Supply Pump. One supply pump pressurizes the system with water from a condensate supply header, which takes suction from the condensate treatment system and/or condensate storage tanks depending on plant operation. One installed spare pump is provided for standby. A discharge check valve prevents backflow through the nonoperating pump. A portion of the pump discharge flow is diverted through a minimum flow bypass line to the condensate storage tank. This flow is controlled by an orifice and is sufficient to prevent immediate pump damage if the pump discharge is inadvertently closed.

Condensate water is processed by two filters in the system. The normal CRD pump suction flow path includes a 25-μ filter with a 250-μ Y-strainer upstream of the filter. The filtration capacity of these two in-series elements is limited by and therefore characterized by, the 25-μ filter (see Figure 4.6-5).

The filters used on the CRD system are of a rugged design and failure of the filters are not considered likely. Alarms are provided to give an early warning to the operator that maintenance is required.

The only known mode of failure of the filter element is for it to collapse due to high differential pressure. The CRD pump suction filter can withstand a maximum differential pressure of 20 psi and an alarm indicates in the control room high suction filter differential pressure at 8 psi. The filter element is additionally protected and strengthened by a stainless steel, perforated center tube. The CRD pump discharge filter can withstand a maximum differential pressure of 300 psi and an alarm indicates in the control room high differential pressure at 20 psi. The filter element is constructed entirely of stainless steel.

If the CRD systems pump suction and discharge filters were bypassed completely, possible presence of corrosion particles would not affect the reliability of the scram function of the CRD system. The presence of corrosion particles may accelerate wear of the drive components over a period of time. However, such wear is not a safety concern since this degradation in drive performance already occurs during normal rod operations and is detectable.

4.6.1.1.2.4.2.2 Accumulator Charging Pressure. Accumulator charging pressure is established by the discharge pressure of the system supply pump. During scram the scram inlet (and outlet) valves open and permit the stored energy in the accumulators to discharge into the drives. The resulting pressure decrease in the charging water header allows the CRD supply pump to "run out" (i.e., flow rate to increase substantially) into the CRDs via the charging water header. The flow sensing system upstream of the accumulator charging header detects high flow and closes the flow control valve. This action maintains increased flow through the charging water header.

Pressure in the charging header is monitored in the control room with a pressure indicator and low pressure alarm. Charging water header pressure is not essential to successfully scram the plant. Each of the accumulators are prevented from leaking back to the charging water header by a check valve. Therefore, the pressure required to scram each rod is maintained. The integrity and leaktightness of these check valves are routinely tested as part of the surveillance test program. In addition, when the reactor is at rated pressure, no accumulator pressure is necessary to scram the plant.

During normal operation the flow control valve maintains a constant system flow rate. This flow is used for drive flow, drive cooling, and system stability.

4.6.1.1.2.4.2.3 Drive Water Pressure. Drive water pressure required in the drive header is maintained by the drive/cooling water pressure control valve, which is manually adjusted from the control room. A flow rate of approximately 6 gpm (the sum of the flow rate required to insert and withdraw a control rod) normally passes from the drive water pressure stage through two solenoid-operated stabilizing valves (arranged in parallel) and then goes into the cooling water header. The flow through one stabilizing valve equals the drive insert flow; that of the other stabilizing valve equals the drive withdrawal flow. When operating a drive, the required flow is diverted to that drive by closing the appropriate stabilizing valve while at the same time opening the drive directional control and exhaust solenoid valves. Thus, flow through the drive/cooling water pressure control valve is always constant.

Flow indicators in the drive water header and in the line downstream from the stabilizing valves allow the flow rate through the stabilizing valves to be adjusted when necessary. Differential pressure between the reactor vessel and the drive pressure stage is indicated in the control room.

4.6.1.1.2.4.2.4 Cooling Water Header. The cooling water header is located downstream from the drive/cooling water pressure valve. The drive/cooling water pressure control valve is manually adjusted from the control room to produce the required drive/cooling water pressure balance.

The flow through the flow control valve is virtually constant. Therefore, once adjusted, the drive/cooling water pressure control valve will maintain the correct drive pressure and cooling water pressure, independent of reactor vessel pressure. Changes in setting of the pressure control valve are required only to adjust for changes in the cooling requirements of the drives, as drive seal characteristics change with time. A flow indicator in the control room monitors cooling water flow. A differential pressure indicator in the control room indicates the difference between reactor vessel pressure and drive/cooling water pressure. Although the drives can function without cooling water, temperatures above 350°F can result in fluid flashing and measurable delays in scram times. The temperature of each drive is monitored by a temperature recorder.

4.6.1.1.2.4.2.5 Scram Discharge Volume. The CGS SDV header system is designed as a continually expanding path from the 185 individual 0.75-in. scram discharge (withdrawal) lines to one of two integrated scram discharge volume/instrument volume (SDV/IV) systems (one system per approximately half the drives). Each integrated SDV/IV system consists of a continuously downsloping piping run expanding from the SDV (consisting of seven 6-in. Return headers from the individual HCU banks to an 8-in. combined return header) to the 12-in. vertically oriented IV. The only location where blockage need be assumed (piping less than 2-in. diameter) is in the 0.75 in. discharge line from the individual HCU. Blockage here would only cause failure of one control rod to insert. This is an acceptable consequence for a single failure and has been evaluated as part of the plant design basis. The header piping is sized to receive and contain all the water discharged by the drives during a full scram (3.34 gal per drive) independent of the IV.

During normal plant operation each SDV is empty and vented to the atmosphere through its open vent and drain valve. When a scram occurs on a signal from the safety circuit, these vent and drain valves are closed to conserve reactor water. Redundant vent and drain valves are incorporated in the design of the SDV to ensure that no single failure can result in uncontrolled loss of reactor coolant. Lights in the control room indicate the position of these valves.

During a scram, the SDV partly fills with water discharged from above the drive pistons. After scram is completed, the CRD seal leakage from the reactor continues to flow into the SDV until the discharge volume pressure equals the reactor vessel pressure. A check valve in each HCU prevents reverse flow from the scram discharge header volume to the drive. When the initial scram signal is cleared from the reactor protection system (RPS), the SDV signal is overridden with a key lock override switch, and the SDV is drained and returned to atmospheric pressure.

Remote manual switches in the pilot valve solenoid circuits allow the discharge volume vent and drain valves to be tested without disturbing the RPS. Closing the SDV valves allows the outlet scram valve seats to be leak tested by timing the accumulation of leakage inside the SDV.

Two transmitter/level switches (non-indicating) and two transmitter/level indicating switches directly connected to each instrument volume monitor the volume for abnormal water level. They provide redundant and diverse input to the RPS scram function. One transmitter on each instrument volume also provides input for the control room annunciation and control rod withdrawal block function. There are three different actuation levels. At the lowest level, a level switch on each instrument volume actuates to indicate that the volume is not completely empty during post-scram draining or to indicate that the volume starts to fill through leakage accumulation at other times during reactor operation. At the second level, one level switch on each instrument volume produces a rod withdrawal block to prevent further withdrawal of any control rod, when leakage accumulates to half the capacity of the instrument volume. The two level switches and the two level indicating switches on each instrument volume are interconnected (one of each per trip channel) with the RPS and will initiate a reactor scram on high water level while sufficient volume for a full scram still exists within the SDV. To provide diversity for the RPS function the two transmitters per channel use a different sensing operating principle and have a different transmitter manufacturer. The level switches and the level indicating switches in each channel are also from different manufacturers.

In the event of a slow or partial loss of air pressure, the high-level scram setpoint and the SDV/IV system capacity ensure that scram capability is maintained even in the event of maximum inleakage into the SDV prior to a scram. Analysis, assuming the maximum inleakage of 5 gpm and using the actual calculation piston-over area to determine the scram volume requirements, shows that adequate scram discharge volume will remain in the SDV system at the time that a scram is initiated.

A partial loss of air pressure does not result in the uncontrolled release of reactor coolant to the reactor building should all or most of the scram discharge valves lift. When the water buildup reaches scram initiation level in the IV, a scram signal is produced. This will cause the air supply to the vent and drain valves to vent, thereby ensuring that the vent and drain valves close and isolate. For leakage rates that do not result in buildup in the IV, the leak will drain to the reactor building equipment drain system.

4.6.1.1.2.4.3 Hydraulic Control Units. Each HCU furnishes pressurized water, on signal, to a drive unit. The drive then positions its control rod as required. Operation of the electrical system that supplies scram and normal control rod positioning signals to the HCU is described in Section 7.7.1.2.

The basic components in each HCU are manual, pneumatic, and electrical valves; an accumulator, related piping, electrical connections, filters, and instrumentation (see Figures 4.6-5, 4.6-6, and 4.6-7). The components and their functions are described in the following.

4.6.1.1.2.4.3.1 Insert Drive Valve. The insert drive valve 123 is solenoid operated and opens on an insert signal. The valve supplies drive water to the bottom side of the main drive piston.

4.6.1.1.2.4.3.2 Insert Exhaust Valve. The insert exhaust solenoid valve 121 also opens on an insert signal. The valve discharges water from above the drive piston to the exhaust water header.

4.6.1.1.2.4.3.3 Withdraw Drive Valve. The withdraw drive valve 122 is solenoid operated and opens on a withdraw signal. The valve supplies drive water to the top of the drive piston.

4.6.1.1.2.4.3.4 Withdraw Exhaust Valve. The solenoid operated withdraw exhaust valve 120 opens on a withdraw signal and discharges water from below the main drive piston to the exhaust header. It also serves as the settle valve, which opens following any normal drive movement (insert or withdraw) to allow the control rod and its drive to settle back into the nearest latch position.

4.6.1.1.2.4.3.5 Speed Control Units. The insert drive valve and withdraw exhaust valve have a speed control unit. The speed control unit regulates the control rod insertion and withdrawal rates during normal operation. The manually adjustable flow control unit is used to regulate the water flow to and from the volume beneath the main drive piston. A correctly adjusted unit does not require readjustment except to compensate for changes in drive seal leakage.

4.6.1.1.2.4.3.6 Scram Pilot Valves. The scram pilot valves are operated from the RPS. Two scram pilot valves control both the scram inlet valve and the scram exhaust valve. The scram pilot valves are identical, three-way, solenoid-operated, normally energized valves. On loss of electrical signal to the pilot valves, such as the loss of external ac power, the inlet ports close and the exhaust ports open on both valves. The pilot valves (Figure 4.6-5) are arranged so that the trip system signal must be removed from both valves before air pressure can be discharged from the scram valve operators.

This prevents the inadvertent scram of a single drive in the event of a failure of one of the pilot valve solenoids.

4.6.1.1.2.4.3.7 Scram Inlet Valve. The scram inlet valve opens to supply pressurized water to the bottom of the drive piston. This quick opening globe valve is operated by an internal spring and system pressure. It is closed by air pressure applied to the toe of its diaphragm operator. A position indicator switch on this valve energizes a light in the control room as soon as the valve starts to open.

4.6.1.1.2.4.3.8 Scram Exhaust Valve. The scram exhaust valve opens slightly before the scram inlet valve, exhausting water from above the drive piston. The exhaust valve opens faster than the inlet valve because of the higher air pressure spring setting in the valve

operator. A position indicator switch on this valve energizes a light in the control room as soon as the valve starts to open.

4.6.1.1.2.4.3.9 Scram Accumulator. The scram accumulator stores sufficient energy to fully insert a control rod at lower vessel pressures. At higher vessel pressures the accumulator pressure is assisted or supplanted by reactor vessel pressure. The accumulator is a hydraulic cylinder with a free-floating piston. The piston separates the water on top from the nitrogen below. A check valve in the accumulator charging water line prevents loss of water pressure in the event supply pressure is lost.

During normal plant operation the accumulator piston is seated at the bottom of its cylinder. Loss of nitrogen decreases the nitrogen pressure, which actuates a pressure switch and sounds an alarm in the control room.

To ensure that the accumulator is always able to produce a scram, it is continuously monitored for water leakage. A float type level switch actuates an alarm if water leaks past the piston barrier and collects in the accumulator instrumentation block.

4.6.1.1.2.5 Control Rod Drive System Operation. The CRD system performs rod insertion, rod withdrawal, and scram. These operational functions are described below.

4.6.1.1.2.5.1 Rod Insertion. Rod insertion is initiated by a signal from the operator to the insert valve solenoids. This signal causes both insert valves to open. The insert drive valve applies reactor pressure plus approximately 90 psi to the bottom of the drive piston. The insert exhaust valve allows water from above the drive piston to discharge to the exhaust header.

As is illustrated in Figure 4.6-3, the locking mechanism is a ratchet-type device and does not interfere with rod insertion. The speed at which the drive moves is determined by the flow through the insert speed control valve, which is set for approximately 4 gpm for a shim speed (nonscram operation) of 3 in./sec. During normal insertion, the pressure on the downstream side of the speed control valve is 90 psi to 100 psi above reactor vessel pressure. However, if the drive slows for any reason, the flow through, and pressure drop across, the insert speed control valve will decrease; the full differential pressure (260 psi) will then be available to cause continued insertion. With 260 psi differential pressure acting on the drive piston, the piston exerts an upward force of 1040 lb.

4.6.1.1.2.5.2 Rod Withdrawal. Rod withdrawal is by design more involved than insertion. The collet finger (latch) must be raised to reach the unlocked position (see Figure 4.6-3). The notches in the index tube and the collet fingers are shaped so that the downward force on the index tube holds the collet fingers in place. The index tube must be lifted before the collet fingers can be released. This is done by opening the drive insert valves (in the manner described in the preceding paragraph) for approximately 1 sec. The withdraw valves are then opened, applying driving pressure above the drive piston and opening the area below the piston

to the exhaust header. Pressure is simultaneously applied to the collet piston. As the piston raises, the collet fingers are cammed outward, away from the index tube, by the guide cap.

The pressure required to release the latch is set and maintained at a level high enough to overcome the force of the latch return spring plus the force of reactor pressure opposing movement of the collet piston. When this occurs, the index tube is unlatched and free to move in the withdraw direction. Water displaced by the drive piston flows out through the withdraw speed control valve, which is set to give the control rod a shim speed of 3 in./sec. The entire valving sequence is automatically controlled and is initiated by a single operation of the rod withdraw switch.

4.6.1.1.2.5.3 Scram. During a scram the scram pilot valves and scram valves are operated as previously described. With the scram valves open, accumulator pressure is admitted under the drive piston, and the area over the drive piston is vented to the SDV.

The large differential pressure (initially approximately 1500 psi and always several hundred psi, depending on reactor vessel pressure) produces a large upward force on the index tube and control rod. This force gives the rod a high initial acceleration and provides a large margin of force to overcome friction. After the initial acceleration is achieved, the drive continues at a nearly constant velocity. This characteristic provides a high initial rod insertion rate. As the drive piston nears the top of its stroke the piston seals close off the large passage (buffer orifices) in the stop piston tube, providing a hydraulic cushion at the end of travel.

Prior to a scram signal the accumulator in the HCU has approximately 1450-1510 psig on the water side and 1000-1200 psig on the nitrogen side. As the inlet scram valve opens, the full water-side pressure is available at the CRD acting on a 4.1 $in.^2$ area. As CRD motion begins, this pressure drops to the gas-side pressure less line losses between the accumulator and the CRD system; at low vessel pressures the accumulator completely discharges with a resulting gas-side pressure of approximately 575 psi. The CRD accumulators are required to scram the control rods when the reactor pressure is low, and the accumulators retain sufficient stored energy to ensure the complete insertion of the control rods in the required time.

The ball check valve in the drive flange allows reactor pressure to supply the scram force whenever reactor pressure exceeds the supply pressure at the drive. This occurs due to accumulator pressure decay and inlet line losses during all scrams at higher vessel pressures. When the reactor is close to or at fully operating pressure, reactor pressure alone will insert the control rod in the required time, although the accumulator does provide additional margin at the beginning of the stroke.

The CRD system provides the following performance at full power operation and with accumulators. The scram insertion time is measured from the instant the scram pilot valve solenoids are deenergized.

Position inserted from fully withdrawn	45	39	25	5
Tech Spec scram insertion time (sec)	0.528	0.866	1.917	3.437

4.6.1.1.2.6 Instrumentation. The instrumentation for both the control rods and CRDs is defined by that given for the manual control system. The objective of the reactor manual control system is to provide the operator with the means to make changes in nuclear reactivity so that reactor power level and power distribution can be controlled. The system allows the operator to manipulate control rods.

The design bases and further discussion are contained in Chapter 7.

4.6.1.2 Control Rod Drive Housing Supports

4.6.1.2.1 Safety Objective

The CRD housing supports prevent any significant nuclear transient if a drive housing breaks or separates from the bottom of the reactor vessel.

4.6.1.2.2 Safety Design Bases

The CRD housing supports shall meet the following safety design bases:

a. Following a postulated CRD housing failure, control rod downward motion shall be limited so that any resulting nuclear transient could not be sufficient to cause fuel damage, and

b. The clearance between the CRD housings and the supports shall be sufficient to prevent vertical contact stresses caused by thermal expansion during plant operation.

4.6.1.2.3 Description

The CRD housing supports are shown in Figure 4.6-8. Horizontal beams are installed immediately below the bottom head of the reactor vessel, between the rows of CRD housings. The beams are supported by brackets welded to the steel form liner of the drive room in the reactor support pedestal.

Hanger rods, approximately 10 ft long and 1.75 in. in diameter, are supported from the beams on stacks of disc springs. These springs compress approximately 2 in. under the design load.

The support bars are bolted between the bottom ends of the hanger rods. The spring pivots at the top and the beveled, loose fitting ends on the support bars prevent substantial bending moment in the hanger rods if the support bars are overloaded.

Individual grids rest on the support bars between adjacent beams. Because a single piece grid would be difficult to handle in the limited work space and because it is necessary that CRDs, position indicators, and in-core instrumentation components be accessible for inspection and maintenance, each grid is designed for in-place assembly or disassembly. Each grid assembly is made from two grid plates, a clamp, and a bolt. The top part of the clamp guides the grid to its correct position directly below the respective CRD housing that it would support in the postulated accident.

When the support bars and grids are installed, a gap of approximately 1 in. at room temperature (approximately 70°F) is provided between the grid and the bottom contact surface of the CRD flange. During system heatup, this gap is reduced by a net downward expansion of the housings with respect to the supports. In the hot operating condition, the gap is approximately 0.25 in.

In the postulated CRD housing failure, the CRD housing supports are loaded when the lower contact surface of the CRD flange contacts the grid. The resulting load is then carried by two grid plates, two support bars, four hanger rods, their disc springs, and two adjacent beams.

For purposes of mechanical design, the postulated failure resulting in the highest forces is an instantaneous circumferential separation of the CRD housing from the reactor vessel, with an internal pressure of 1250 psig (reactor vessel design pressure) acting on the area of the separated housing. The weight of the separated housing, CRD, and blade, plus the pressure of 1250 psig acting on the area of the separated housing, gives a force of approximately 35,000 lb. This force is multiplied by a factor of three for impact, conservatively assuming that the housing travels through a 1-in. gap before it contacts the supports. The total force (105,000 lb) is then treated as a static load in design.

All CRD housing support subassemblies are fabricated of commonly available structural steel, except for the disc springs, which are Schnorr, Type BS-125-71-8.

4.6.2 EVALUATION OF THE CONTROL ROD DRIVES

Safety evaluation of the control rods, CRDs, and CRD housing supports is described below. Further description of control rods is contained in Section 4.2. The evaluation of the effects of pipe breaks on the CRDs may be found in Section 3.6.

4.6.2.1 Control Rods

4.6.2.1.1 Materials Adequacy Throughout Design Lifetime

The adequacy of the materials throughout the design life was evaluated in the mechanical design of the control rods. The primary materials, B_4C powder, hafnium, and type 304 austenitic stainless steel, have been found suitable in meeting the demands of the BWR environment.

4.6.2.1.2 Dimensional and Tolerance Analysis

Layout studies are done to ensure that, given the worst combination of extreme detail part tolerance ranges at assembly, no interference exists which will restrict the passage of control rods.

The italicized information is historical and was provided to support the application for an operating license.

In addition, during initial preoperational testing, an observer who is in direct communication with the control room will observe the operation of each individual control rod and verify that there is no binding or restriction to rod motion and will listen for any scraping or binding noises which may signify rod misalignment. In addition, the function of each CRD line will be measured as indicated by the differential pressure developed across the CRD piston during notch withdrawal. These differential pressure traces will be compared to reference traces to proper operation and the absence of abnormal friction.

4.6.2.1.3 Thermal Analysis of the Tendency to Warp

The various parts of the control rod assembly remain at approximately the same temperature during reactor operation, negating the problem of distortion or warpage. What little differential thermal growth could exist is allowed for in the mechanical design. A minimum axial gap is maintained between absorber rod tubes and the control rod frame assembly for the purpose. In addition, dissimilar metals are avoided to further this end.

4.6.2.1.4 Forces for Expulsion

An analysis has been performed that evaluates the maximum pressure forces which could tend to eject a control rod from the core. The results of this analysis are given in Section 4.6.2.2.2.2. In summary, if the collet were to remain open, which is unlikely, calculations indicate that the steady-state control rod withdrawal velocity would be 2 ft/sec for a pressure-under line break, the limiting case for rod withdrawal.

4.6.2.1.5 Functional Failure of Critical Components

The consequences of a functional failure of critical components have been evaluated and the results are discussed in Section 4.6.2.2.2.

4.6.2.1.6 Precluding Excessive Rates of Reactivity Addition

To preclude excessive rates of reactivity addition, analysis has been performed both on the velocity limiter device and the effect of probable control rod failures (see Section 4.6.2.2.2).

4.6.2.1.7 Effect of Fuel Rod Failure on Control Rod Channel Clearances

The CRD mechanical design ensures a sufficiently rapid insertion of control rods to preclude the occurrence of fuel rod failures that could hinder reactor shutdown by causing significant distortions in channel clearances.

4.6.2.1.8 Mechanical Damage

Analysis has been performed for all areas of the control system showing that system mechanical damage does not affect the capability to continuously provide reactivity control.

In addition to the analysis performed on the CRD (see Sections 4.6.2.2.2 and 4.6.2.2.3) and the control rod blade, the following discussion summarizes the analysis performed on the control rod guide tube.

The guide tube can be subjected to any or all of the following loads:

a. Inward load due to pressure differential,
b. Lateral loads due to flow across the guide tube,
c. Dead weight,
d. Seismic (vertical and horizontal), and
e. Vibration.

In all cases analysis was performed considering both a recirculation line break and a steam line break. These events result in the largest hydraulic loadings on a control rod guide tube.

Two primary modes of failure were considered in the guide tube analysis: exceeding allowable stress and excessive elastic deformation. It was found that the allowable stress limit will not be exceeded and that the elastic deformations of the guide tube never are great enough to cause the free movement of the control rod to be jeopardized.

4.6.2.1.9 Evaluation of Control Rod Velocity Limiter

The control rod velocity limiter limits the free fall velocity of the control rod to a value that cannot result in nuclear system process barrier damage. This velocity is evaluated by the rod drop accident analysis in Chapter 15.

4.6.2.2 Control Rod Drives

4.6.2.2.1 Evaluation of Scram Time

The rod scram function of the CRD system provides the negative reactivity insertion required by safety design basis Section 4.6.1.1.1.1. The scram time shown in the description is adequate as shown by the transient analyses in Chapter 15.

4.6.2.2.2 Analysis of Malfunction Relating to Rod Withdrawal

There are no known single malfunctions that cause the unplanned withdrawal of even a single control rod. However, if multiple malfunctions are postulated, studies show that an unplanned rod withdrawal can occur at withdrawal speeds that vary with the combination of malfunctions postulated. In all cases the subsequent withdrawal speeds are less than that assumed in the rod drop accident analysis as discussed in Chapter 15. Therefore, the physical and radiological consequences of such rod withdrawals are less than those analyzed in the rod drop accident.

4.6.2.2.2.1 Drive Housing Fails at Attachment Weld. The bottom head of the reactor vessel has a penetration for each CRD location. A drive housing is raised into position inside each penetration and fastened by welding. The drive is raised into the drive housing and bolted to a flange at the bottom of the housing. The housing material is seamless, type 304 stainless-steel pipe with a minimum tensile strength of 75,000 psi. The basic failure considered here is a complete circumferential crack through the housing wall at an elevation just below the J-weld.

Static loads on the housing wall include the weight of the drive and the control rod, the weight of the housing below the J-weld, and the reactor pressure acting on the 6-in.-diameter cross-sectional area of the housing and the drive. Dynamic loading results from the reaction force during drive operation.

If the housing were to fail as described, the following sequence of events is foreseen. The housing would separate from the vessel. The CRD and housing would be blown downward against the support structure by reactor pressure acting on the cross-sectional area of the housing and the drive. The downward motion of the drive and associated parts would be determined by the gap between the bottom of the drive and the support structure and by the deflection of the support structure under load. In the current design, maximum deflection is approximately 3 in. If the collet were to remain latched, no further control rod ejection would occur (Reference 4.6-1); the housing would not drop far enough to clear the vessel

penetration. Reactor water would leak at a rate of approximately 220 gpm through the 0.03-in.-diametral clearance between the housing and the vessel penetration.

If the basic housing failure were to occur while the control rod is being withdrawn (this is a small fraction of the total drive operating time) and if the collet were to stay unlatched, the following sequence of events is foreseen. The housing would separate from the vessel. The drive and housing would be blown downward against the CRD housing support. Calculations indicate that the steady-state rod withdrawal velocity would be 0.3 ft/sec. During withdrawal, pressure under the collet piston would be approximately 250 psi greater than the pressure over it. Therefore, the collet would be held in the unlatched position until driving pressure was removed from the pressure-over port.

4.6.2.2.2.2 Rupture of Hydraulic Line(s) to Drive Housing Flange. There are three types of possible rupture of hydraulic lines to the drive housing flange: (1) pressure-under line break; (2) pressure-over line break; and (3) coincident breakage of both of these lines.

4.6.2.2.2.2.1 Pressure-Under Line Break. For the case of a pressure-under line break, a partial or complete circumferential opening is postulated at or near the point where the line enters the housing flange. Failure is more likely to occur after another basic failure wherein the drive housing or housing flange separates from the reactor vessel. Failure of the housing, however, does not necessarily lead directly to failure of the hydraulic lines.

If the pressure-under line were to fail and if the collet were latched, no control rod withdrawal would occur. There would be no pressure differential across the collet piston and, therefore, no tendency to unlatch the collet. Consequently, the associated control rod could not be withdrawn, but if reactor pressure is greater than 600 psig, it will insert on a scram signal.

The ball check valve is designed to seal off a broken pressure-under line by using reactor pressure to shift the check ball to its upper seat. If the ball check valve were prevented from seating, reactor water would leak to the atmosphere. Because of the broken line, cooling water could not be supplied to the drive involved. Loss of cooling water would cause no immediate damage to the drive. However, prolonged exposure of the drive to temperatures at or near reactor temperature could lead to deterioration of material in the seals. Temperature is monitored by a temperature recorder. A second indication would be high cooling water flow.

If the basic line failure were to occur while the control rod is being withdrawn, the hydraulic force would not be sufficient to hold the collet open, and spring force normally would cause the collet to latch and stop rod withdrawal. However, if the collet were to remain open, calculations indicate that the steady-state control rod withdrawal velocity would be 2 ft/sec.

4.6.2.2.2.2.2 Pressure-Over Line Break. The case of the pressure-over line breakage considers the complete breakage of the line at or near the point where it enters the housing flange. If the line were to break, pressure over the drive piston would drop from reactor

pressure to atmospheric pressure. Any significant reactor pressure (approximately 600 psig or greater) would act on the bottom of the drive piston and fully insert the drive. Insertion would occur regardless of the operational mode at the time of the failure. After full insertion, reactor water would leak past the stop piston seals. This leakage would exhaust to the atmosphere through the broken pressure-over line. The leakage rate at 1000 psi reactor pressure is estimated to be 4 gpm nominal but not more than 10 gpm, based on experimental measurements. If the reactor were hot, drive temperature would increase. This situation would be indicated to the reactor operator by the drift alarm, by the fully inserted drive, by a high drive temperature, and by operation of the drywell sump pump.

4.6.2.2.2.2.3 Simultaneous Breakage of the Pressure-Over and Pressure-Under Lines. For the simultaneous breakage of the pressure-over and pressure-under lines, pressures above and below the drive piston would drop to zero, and the ball check valve would close the broken pressure-under line. Reactor water would flow from the annulus outside the drive, through the vessel ports, and to the space below the drive piston. As in the case of pressure-over line breakage, the drive would then insert (approximately 600 psig or greater) at a speed dependent on reactor pressure. Full insertion would occur regardless of the operational mode at the time of failure. Reactor water would leak past the drive seals and out the broken pressure-over line to the atmosphere, as described above. Drive temperature would increase. Indication in the control room would include the drift alarm, the fully inserted drive, and operation of the drywell sump pump.

4.6.2.2.2.3 All Drive Flange Bolts Fail in Tension. Each CRD is bolted to a flange at the bottom of a drive housing. The flange is welded to the drive housing. Bolts are made of alloy steel, with a minimum tensile strength of 125,000 psi. Each bolt has an allowable load capacity of 15,200 lb. Capacity of the eight bolts is 121,600 lb. As a result of the reactor design pressure of 1250 psig, the major load on all eight bolts is 30,400 lb.

If a progressive or simultaneous failure of all bolts were to occur, the drive would separate from the housing. The control rod and the drive would be blown downward against the support structure. Impact velocity and support structure loading would be slightly less than that for drive housing failure because reactor pressure would act on the drive cross-sectional area only and the housing would remain attached to the reactor vessel. The drive would be isolated from the cooling water supply. Reactor water would flow downward past the velocity limiter piston, through the large drive filter, and into the annular space between the thermal sleeve and the drive. For worst-case leakage calculations, the large filter is assumed to be deformed or swept out of the way so it would offer no significant flow restriction. At a point near the top of the annulus, where pressure would have dropped to 350 psi, the water would flash to steam and cause choke-flow conditions. Steam would flow down the annulus and out the space between the housing and the drive flanges to the drywell. Steam formation would limit the leakage rate to approximately 840 gpm.

If the collet were latched, control rod ejection would be limited to the distance the drive can drop before coming to rest on the support structure. There would be no tendency for the collet to unlatch, because pressure below the collet piston would drop to zero. Pressure forces, in fact, exert 1435 lb to hold the collet in the latched position.

If the bolts failed during control rod withdrawal, pressure below the collet piston would drop to zero. The collet, with 1650-lb return force, would latch and stop rod withdrawal.

4.6.2.2.2.4 Weld Joining Flange to Housing Fails in Tension. The failure considered is a crack in or near the weld that joins the flange to the housing. This crack extends through the wall and completely around the housing. The flange material is forged, type 304 stainless steel, with a minimum tensile strength of 75,000 psi. The housing material is seamless, type 304 stainless steel pipe, with a minimum tensile strength of 75,000 psi. The conventional, full penetration weld of type 308 stainless steel has a minimum tensile strength approximately the same as that for the parent metal. The design pressure and temperature are 1250 psig and 575°F. Reactor pressure acting on the cross-sectional area of the drive; the weight of the control rod, drive, and flange; and the dynamic reaction force during drive operation result in a maximum tensile stress at the weld of approximately 6000 psi.

If the basic flange-to-housing joint failure occurred, the flange and the attached drive would be blown downward against the support structure. The support structure loading would be slightly less than that for drive housing failure because reactor pressure would act only on the drive cross-sectional area. Lack of differential pressure across the collet piston would cause the collet to remain latched and limit control rod motion to approximately 3 in. Downward drive movement would be small; therefore, most of the drive would remain inside the housing. The pressure-under and pressure-over lines are flexible enough to withstand the small displacement and remain attached to the flange. Reactor water would follow the same leakage path described above for the flange-bolt failure, except that exit to the drywell would be through the gap between the lower end of the housing and the top of the flange. Water would flash to steam in the annulus surrounding the drive. The leakage rate would be approximately 840 gpm.

If the basic failure were to occur during control rod withdrawal (a small fraction of the total operating time) and if the collet were held unlatched, the flange would separate from the housing. The drive and flange would be blown downward against the support structure. The calculated steady-state rod withdrawal velocity would be 0.13 ft/sec. Because pressure-under and pressure-over lines remain intact, driving water pressure would continue to the drive, and the normal exhaust line restriction would exist. The pressure below the velocity limiter piston would drop below normal as a result of leakage from the gap between the housing and the flange. This differential pressure across the velocity limiter piston would result in a net downward force of approximately 70 lb. Leakage out of the housing would greatly reduce the pressure in the annulus surrounding the drive. Thus, the net downward force on the drive piston would be less than normal. The overall effect of these events would be to reduce rod

withdrawal to approximately one-half of normal speed. With a 560 psi differential across the collet piston, the collet would remain unlatched; however, it should relatch as soon as the drive signal is removed.

4.6.2.2.2.5 Housing Wall Ruptures. This failure is a vertical split in the drive housing wall just below the bottom head of the reactor vessel. The flow area of the hole is considered equivalent to the annular area between the drive and the thermal sleeve. Thus, flow through this annular area, rather than flow through the hole in the housing, would govern leakage flow. The housing is made of type 304 stainless-steel seamless pipe, with a minimum tensile strength of 75,000 psi. The maximum hoop stress of 11,900 psi results primarily from the reactor design pressure (1250 psig) acting on the inside of the housing.

If such a rupture were to occur, reactor water would flash to steam and leak through the hole in the housing to the drywell at approximately 1030 gpm. Choke-flow conditions would exist, as described previously for the flange-bolt failure. However, leakage flow would be greater because flow resistance would be less; that is, the leaking water and steam would not have to flow down the length of the housing to reach the drywell. A critical pressure of 350 psi causes the water to flash to steam.

No pressure differential across the collet piston would tend to unlatch the collet, but the drive would insert as a result of loss of pressure in the drive housing causing a pressure drop in the space above the drive piston.

If this failure occurred during control rod withdrawal, drive withdrawal would stop, but the collet would remain unlatched. The drive would be stopped by a reduction of the net downward force action on the drive line. The net force reduction would occur when the leakage flow of 1030 gpm reduces the pressure in the annulus outside the drive to approximately 540 psig, thereby reducing the pressure acting on top of the drive piston to the same value. A pressure differential of approximately 710 psi would exist across the collet piston and hold the collet unlatched as long as the operator held the withdraw signal.

4.6.2.2.2.6 Flange Plug Blows Out. To connect the vessel ports with the bottom of the ball check valve, a hole of 0.75-in. diameter is drilled in the drive flange. The outer end of this hole is sealed with a plug of 0.812-in. diameter and 0.25-in. thickness. A full-penetration, type 308 stainless steel weld holds the plug in place. The postulated failure is a full circumferential crack in this weld and subsequent blowout of the plug.

If the weld were to fail, the plug were to blow out, and the collet remained latched, there would be no control rod motion. There would be no pressure differential across the collet piston acting to unlatch the collet. Reactor water would leak past the velocity limiter piston, down the annulus between the drive and the thermal sleeve, through the vessel ports and drilled passage, and out the open plug hole to the drywell at approximately 320 gpm. Leakage calculations assume only liquid flows from the flange. Actually, hot reactor water would flash

to steam, and choke-flow conditions would exist. Thus, the expected leakage rate would be lower than the calculated value.

If this failure were to occur during control rod withdrawal and if the collet were to stay unlatched, calculations indicate that control rod withdrawal speed would be approximately 0.24 ft/sec. Leakage from the open plug hole in the flange would cause reactor water to flow downward past the velocity limiter piston. A small differential pressure across the piston would result in an insignificant driving force of approximately 10 lb, tending to increase withdraw velocity.

A pressure differential of 295 psi across the collet piston would hold the collet unlatched as long as the driving signal was maintained.

Flow resistance of the exhaust path from the drive would be normal because the ball check valve would be seated at the lower end of its travel by pressure under the drive piston.

4.6.2.2.2.7 Ball Check Valve Plug Blows Out. As a means of access for machining the ball check valve cavity, a 1.25-in.-diameter hole has been drilled in the flange forging. This hole is sealed with a plug of 1.31-in. diameter and 0.38-in. thickness. A full-penetration weld, using type 308 stainless steel filler, holds the plug in place. The failure postulated is a circumferential crack in this weld leading to a blowout of the plug.

If the plug were to blow out while the drive was latched, there would be no control rod motion. No pressure differential would exist across the collet piston to unlatch the collet. As in the previous failure, reactor water would flow past the velocity limiter, down the annulus between the drive and thermal sleeve, through the vessel ports and drilled passage, through the ball check valve cage and out the open plug hole to the drywell. The leakage calculations indicate the flow rate would be 350 gpm. This calculation assumes liquid flow, but flashing of the hot reactor water to steam would reduce this rate to a lower value. Drive temperature would rapidly increase.

If the plug failure were to occur during control rod withdrawal (it would not be possible to unlatch the drive after such a failure), the collet would relatch at the first locking groove. If the collet were to stick, calculations indicate the control rod withdrawal speed would be 11.8 ft/sec. There would be a large retarding force exerted by the velocity limiter due to a 35 psi pressure differential across the velocity limiter piston.

4.6.2.2.2.8 Drive/Cooling Water Pressure Control Valve Failure. The pressure to move a drive is generated by the pressure drop of practically the full system flow through the drive/cooling water pressure control valve. This valve is either a motor-operated valve or a standby manual valve; either one is adjusted to a fixed opening. The normal pressure drop across this valve develops a pressure 260 psi in excess of reactor pressure.

If the flow through the drive/cooling water pressure control valve were to be stopped, as by a valve closure or flow blockage, the drive pressure would increase to the shutoff pressure of the supply pump. The occurrence of this condition during withdrawal of a drive at zero vessel pressure will result in a drive pressure increase from 260 psig to no more than 1750 psig. Calculations indicate that the drive would accelerate from 3 in./sec to approximately 6.5 in./sec. A pressure differential of 1670 psi across the collet piston would hold the collet unlatched. Flow would be upward past the velocity limiter piston, but retarding force would be negligible. Rod movement would stop as soon as the driving signal was removed.

Conversely, if the PCV were to fail to a full open position, the cooling water pressure would increase and the drive water pressure would decrease. The resulting cooling water pressure increase could cause control rods to drift inward. The existence of rod drifts would be alarmed to the control room operator for appropriate action. The resulting drop in drive water pressure would make normal control rod notch movements impossible but would not affect the ability of the scram function.

In both of the cases described above, the manually operated bypass PCV in conjunction with the isolation gate valves located upstream and downstream of the PCV would enable the operators to take corrective action.

In conclusion, although the failure to the full open or full closed position of the drive/cooling water PCV will cause perturbation in the CRD system operation, it does not present a safety problem to affect the scram capability of the CRD system.

4.6.2.2.2.9 Ball Check Valve Fails to Close Passage to Vessel Ports. Should the ball check valve sealing the passage to the vessel ports be dislodged and prevented from reseating following the insert portion of a drive withdrawal sequence, water below the drive piston would return to the reactor through the vessel ports and the annulus between the drive and the housing rather than through the speed control valve. Because the flow resistance of this return path would be lower than normal, the calculated withdrawal speed would be 2 ft/sec. During withdrawal, differential pressure across the collet piston would be approximately 40 psi. Therefore, the collet would tend to latch and would have to stick open before continuous withdrawal at 2 ft/sec, could occur. Water would flow upward past the velocity limiter piston, generating a small retarding force of approximately 120 lb.

4.6.2.2.2.10 Hydraulic Control Unit Valve Failures. Various failures of the valves in the HCU can be postulated, but none could produce differential pressures approaching those described in the preceding paragraphs and none alone could produce a high velocity withdrawal. Leakage through either one or both of the scram valves produces a pressure that tends to insert the control rod rather than to withdraw it. If the pressure in the SDV should exceed reactor pressure following a scram, a check valve in the line to the scram discharge header prevents this pressure from operating the drive mechanisms.

4.6.2.2.2.11 Collet Fingers Fail to Latch. The failure is presumed to occur when the drive withdraw signal is removed. If the collet fails to latch, the drive continues to withdraw at a fraction of the normal speed. This assumption is made because there is no known means for the collet fingers to become unlocked without some initiating signal. Because the collet fingers will not cam open under a load, accidental application of a down signal does not unlock them. (The drive must be given a short insert signal to unload the fingers and cam them open before the collet can be driven to the unlock position.) If the drive withdrawal valve fails to close following a rod withdrawal, the collet would remain open and the drive continue to move at a reduced speed.

4.6.2.2.2.12 Withdrawal Speed Control Valve Failure. Normal withdrawal speed is determined by differential pressures in the drive and is set for a nominal value of 3 in./sec. Withdrawal speed is maintained by the pressure regulating system and is independent of reactor vessel pressure. Tests have shown that accidental opening of the speed control valve to the full-open position produces a velocity of approximately 6 in./sec.

The CRD system prevents unplanned rod withdrawal and it has been shown above that only multiple failures in a drive unit and its control unit could cause an unplanned rod withdrawal.

4.6.2.2.2.13 Slow or Partial Loss of Air to the Scram Discharge Valves. The CGS IV is adequately hydraulically coupled to the SDV, i.e., the IV is connected directly to the SDV with piping of a diameter equal to or greater than the diameter of the SDV headers. This allows for direct detection of liquid buildup so that the ability to scram is ensured.

The basis of the instrument volume high level scram setpoint and the SDV/IV physical arrangement provides for scram action before significant SDV reduction occurs which could affect scram capability.

The high-level scram setpoint and the SDV/IV system capacity ensure that scram capability is maintained even in the event of maximum inleakage into the SDV prior to a scram. Analysis, assuming the maximum inleakage of 5 gpm and using the actual calculated piston-over area to determine the scram volume requirements, shows that adequate SDV will remain in the SDV system at the time that a scram is initiated.

The partial loss of air pressure does not result in the uncontrolled release of reactor coolant to the reactor building. The vent and drain valves are spring to close-held open by air. Flow through the valve tends to close it. As air pressure decreases the valves will begin to close to limit coolant inventory loss. When the water buildup reaches scram initiation level in the IV, a scram signal is produced.

This will cause the air supply to the vent and drain valves to vent, thereby ensuring that the vent and drain valves close and isolate. For leakage rates which do not result in buildup in the IV, the leak will drain to the reactor building equipment drain system.

4.6.2.2.3 Scram Reliability

High scram reliability is the result of a number of features of the CRD system. For example

a. Two reliable sources of scram energy are used to insert each control rod: individual accumulators at low reactor pressure, and the reactor vessel pressure itself at power;

b. Each drive mechanism has its own scram and pilot valves so only one drive can be affected if a scram valve fails to open. Two pilot valves are provided for each drive. Both pilot valves must be deenergized to initiate a scram;

c. The RPS and the HCUs are designed so that the scram signal and mode of operation override all others;

d. The collet assembly and index tube are designed so they will not restrain or prevent control rod insertion during scram; and

e. The SDV is monitored for accumulated water and the reactor will scram before the volume is reduced to a point that could interfere with a scram.

4.6.2.2.4 Control Rod Support and Operation

Each control rod is independently supported and controlled as required by the safety design bases.

4.6.2.3 Control Rod Drive Housing Supports

Downward travel of the CRD housing and its control rod following the postulated housing failure equals the sum of these distances: (1) the compression of the disc springs under dynamic loading, and (2) the initial gap between the grid and the bottom contact surface of the CRD flange. If the reactor were cold and pressurized, the downward motion of the control rod would be limited to the spring compression (approximately 2 in.) plus a gap of approximately 1 in. If the reactor were hot and pressurized, the gap would be approximately 0.25 in. and the spring compression would be slightly less than in the cold condition. In either case, the control rod movement following a housing failure is substantially limited below one drive "notch" movement (6 in.). Sudden withdrawal of any control rod through a distance of one drive notch at any position in the core does not produce a transient sufficient to damage any radioactive material barrier.

The CRD housing supports are in place during power operation and when the reactor coolant system is pressurized. If a control rod is ejected during shutdown, the reactor remains subcritical because it is designed to remain subcritical with any one control rod fully withdrawn at any time.

At plant operating temperature, a gap of approximately 0.25 in. exists between the CRD housing and the supports. At lower temperatures the gap is greater. Because the supports do not contact any of the CRD housing except during the postulated accident condition, vertical contact stresses are prevented.

4.6.3 TESTING AND VERIFICATION OF THE CONTROL ROD DRIVES

4.6.3.1 Control Rod Drives

4.6.3.1.1 Testing and Inspection

4.6.3.1.1.1 Development Tests. The development drive (prototype) testing included more than 5000 scrams and approximately 100,000 latching cycles. One prototype was exposed to simulated operating conditions for 5000 hr. These tests demonstrated the following:

a. The drive easily withstands the forces, pressures, and temperatures imposed;

b. Wear, abrasion, and corrosion of the nitrided stainless parts are negligible. Mechanical performance of the nitrided surface is superior to that of materials used in earlier operating reactors;

c. The basic scram speed of the drive has a satisfactory margin above minimum plant requirements at any reactor vessel pressure; and

d. Usable seal lifetimes in excess of 1000 scram cycles can be expected.

4.6.3.1.1.2 Factory Quality Control Tests. Quality control of welding, heat treatment, dimensional tolerances, material verification, and similar factors is maintained throughout the manufacturing process to ensure reliable performance of the mechanical reactivity control components. Some of the quality control tests performed on the control rods, CRD mechanisms, and HCU are listed below:

a. Control rod drive mechanism tests

   1. Pressure welds on the drives are hydrostatically tested in accordance with ASME codes;

2. Electrical components are checked for electrical continuity and resistance to ground;

3. Drive parts that cannot be visually inspected for dirt are flushed with filtered water at high velocity. No significant foreign material is permitted in effluent water;

4. Seals are tested for leakage to demonstrate correct seal operation;

5. Each drive is tested for shim motion, latching, and control rod position indication; and

6. Each drive is subjected to cold scram tests at various reactor pressures to verify correct scram performance.

b. Hydraulic control unit tests

1. Hydraulic systems are hydrostatically tested in accordance with the applicable code;

2. Electrical components and systems are tested for electrical continuity and resistance to ground;

3. Correct operation of the accumulator pressure and level switches is verified;

4. The unit's ability to perform its part of a scram is demonstrated; and

5. Correct operation and adjustment of the insert and withdrawal valves is demonstrated.

4.6.3.1.1.3 Operational Tests. After installation, all rods and drive mechanisms can be tested through their full stroke for operability.

During normal operation each time a control rod is withdrawn a notch, the operator can observe the in-core monitor indications to verify that the control rod is following the drive mechanism. All control rods that are partially withdrawn from the core can be tested for rod-following by inserting or withdrawing the rod one notch and returning it to its original position, while the operator observes the in-core monitor indications.

To make a positive test of control rod to CRD coupling integrity, the operator can withdraw a control rod to the end of its travel and then attempt to withdraw the drive to the over-travel position. Failure of the drive to over-travel demonstrates rod-to-drive coupling integrity.

Hydraulic supply subsystem pressures can be observed from instrumentation in the control room. Scram accumulator pressures can be observed on the nitrogen pressure gages.

4.6.3.1.1.4 Acceptance Tests. Criteria for acceptance of the individual CRD mechanisms and the associated control and protection systems were incorporated in specifications and test procedures covering three distinct phases: (1) pre-installation, (2) after installation prior to startup, and (3) during startup testing.

The pre-installation specification defined criteria and acceptable ranges of such characteristics as seal leakage, friction, and scram performance under fixed test conditions which must be met before the component was shipped.

The after installation, prestartup tests (Section 14.2) included normal and scram motion and were primarily intended to verify that piping, valves, electrical components and instrumentation were properly installed. The test specifications included criteria and acceptable ranges for drive speed, time settings, scram valve response times, and control pressures. These tests were intended more to document system condition than as tests of performance.

As fuel was placed in the reactor, the startup test procedure (Chapter 14) was followed. The tests in this procedure were intended to demonstrate that the initial operational characteristics meet the limits of the specifications over the range of primary coolant temperatures and pressures from ambient to operating.

4.6.3.1.1.5 Surveillance Tests. The surveillance requirements for the CRD system are as follows:

a. Prior to each in-vessel fuel movement during fuel loading sequence, the shutdown margin with the highest worth control rod withdrawn shall be analytically determined to be at least 0.38% $\Delta k/k$ or shall be determined by test to be at least 0.28% $\Delta k/k$;

b. Once within 4 hr after criticality following fuel movement within the RPV or control rod replacement, the shutdown margin with the highest worth control rod withdrawn shall be analytically determined to be at least 0.38% $\Delta k/k$ or shall be determined by test to be at least 0.28% $\Delta k/k$;

c. Each withdrawn control rod shall be exercised one notch (i.e., inserted at least one notch and then may be returned to its original position) in accordance with the Technical Specifications.

The control rod exercise tests serve as a periodic check against deterioration of the control rod system and also verifies the ability of the CRD to scram. If a rod can be moved with drive pressure, it may be expected to scram since higher pressure is applied during scram;

d. The coupling integrity shall be verified for each withdrawn control rod as follows:

1. When the rod is first withdrawn, observe discernible response of the nuclear instrumentation, and

2. When the rod is fully withdrawn each time, observe that the drive will not go to the over-travel position.

Observation of a response from the nuclear instrumentation during an attempt to withdraw a control rod indicates indirectly that the rod and drive are coupled. The over-travel position feature provides a positive check on the coupling integrity, for only an uncoupled drive can reach the over-travel position;

e. During operation, accumulator pressure and level at the normal operating value shall be verified.

Experience with CRD systems of the same type indicates that weekly verification of accumulator pressure and level is sufficient to ensure operability of the accumulator portion of the CRD system;

f. At the time of each major refueling outage, each operable control rod shall be subjected to scram time tests from the fully withdrawn position.

Experience indicates that the scram times of the control rods do not significantly change over the time interval between refueling outages. A test of the scram times at each refueling outage is sufficient to identify any significant lengthening of the scram times; and

g. A channel functional test of the accumulator leak detectors and a channel calibration of the accumulator pressure detectors, which verifies an alarm setpoint ≥940 psig on decreasing pressure, is performed as necessary based on performance history and the preventative maintenance program requirements.

4.6.3.1.1.6 Functional Tests. The functional testing program of the CRDs consists of the 5-year maintenance life and the 1.5X design life test programs as described in Section 3.9.4.4.

There are a number of failures that can be postulated on the CRD but it would be very difficult to test all possible failures. A partial test program with postulated accident conditions and imposed single failures is available.

The following tests with imposed single failures have been performed to evaluate the performance of the CRDs under these conditions:

a. Simulated ruptured scram line test,
b. Stuck ball check valve in CRD flange,
c. HCU drive down inlet flow control valve (V122) failure,
d. HCU drive down outlet flow control valve (V120) failure,
e. CRD scram performance with V120 malfunction,
f. HCU drive up outlet control valve (V121) failure,
g. HCU drive up inlet control valve (V123) failure,
h. Cooling water check valve (V138) leakage,
i. CRD flange check valve leakage,
j. CRD stabilization circuit failure,
k. HCU filter restriction,
l. Air trapped in CRD hydraulic system,
m. CRD collet drop test, and
n. CR qualification velocity limiter drop test.

Additional postulated CRD failures are discussed in Sections 4.6.2.2.2.1 through 4.6.2.2.2.12.

4.6.3.2 Control Rod Drive Housing Supports

CRD housing supports are removed for inspection and maintenance of the CRDs. The supports for one control rod can be removed during reactor shutdown, even when the reactor is pressurized, because all control rods are then inserted. When the support structure is reinstalled, it is inspected for correct assembly with particular attention to maintaining the correct gap between the CRD flange lower contact surface and the grid.

4.6.4 INFORMATION FOR COMBINED PERFORMANCE OF REACTIVITY CONTROL SYSTEMS

4.6.4.1 Vulnerability to Common Mode Failures

The two reactivity control systems, the CRD and SLC systems, do not share any instrumentation or components. Thus, a common mode failure of the reactivity systems would be limited to an accident event which could damage essential equipment in the two independent systems.

A seismic event or the postulated accident environments (see Section 3.11) are not considered potential common mode failures since the essential (scram) portions of the CRD system are designed to Seismic Category I standards and to operate as required under postulated accident environmental conditions. The SLC system is also designed to Seismic Category I standards.

No common mode power failure is considered credible. The scram function of the CRD system is "fail-safe" on a loss of power and is designed to override any other CRD function. The SLC system has two independent power supplies to its essential redundant pumps and valves. The power supplies to the SLC system are considered vital and as such are switched to the onsite standby diesels on a loss of normal power sources.

Essential components (including cabling and piping) for the SLC system are separated from essential CRD components in the secondary containment by physical barriers and/or by at least 40 ft of physical separation. The various safety studies performed by the architect-engineer verified that this separation is sufficient to prevent simultaneous failure of the reactivity systems due to pipe break and whip, credible fires, and all potential missiles. The location of the primary components of these systems is shown in Figures 1.2-7 through 1.2-12. The CRD insert and withdrawal lines penetrate at the bottom of the RPV whereas the SLC lines connect to the HPCS line which penetrates the RPV. Protection of the reactivity control systems from postulated events, such as pipe breaks, is discussed in Section 3.6.

A fault tree analysis was completed for both of these systems, and the calculated unreliability is less than 10^{-7}/reactor year. This unreliability is an estimate of the failure to fully insert the control rods into the core, combined with a failure to inject boron into the vessel by the SLC. Failure to insert control rods is defined to be noninsertion of the CRDs in the following manner: 50% in a "checkerboard pattern," 31% in a random pattern, or 4% in a cluster.

4.6.4.2 Accidents Taking Credit for Multiple Reactivity Systems

There are no postulated accidents evaluated in Chapter 15 that take credit for two or more reactivity control systems preventing or mitigating each accident.

4.6.5 EVALUATION OF COMBINED PERFORMANCE

As indicated in Section 4.6.4.2, credit is not taken for multiple reactivity control systems for any postulated accidents in Chapter 15.

4.6.6 ALTERNATE ROD INSERTION SYSTEM

4.6.6.1 System Description

The alternate rod insertion (ARI) system provides an alternate means to scram the control rods which is diverse and independent from the RPS. The ARI system may be actuated either

manually or automatically. The automatic signal to initiate ARI comes from high reactor vessel pressure or low reactor water level. The setpoints for ARI automatic initiation have been chosen such that a normal scram should already have been initiated by the above parameters prior to ARI initiation. The ARI system causes a scram by relieving the scram air header through four sets of solenoid valves. This, in turn, causes the scram inlet and outlet valves to open. The CRD units then insert the control blades to shutdown the reactor.

The ARI system has been designed to ensure that rod motion begins within sufficient time to ensure the ARI design objectives of Reference 4.6-2 are satisfied. These rod movement times are based on plant unique conditions and compliance with ARI design objectives to ensure that plant safety considerations will be met.

4.6.6.2 Alternate Rod Insertion Redundancy

The ARI system constitutes a redundant back-up to the normal scram system and is, therefore, not redundant in itself. That is, the ARI system is only one system with two divisions. Both divisions must function properly for the design basis rod insertion times to be met.

The ARI system is, however, redundant in the aspect of preventing spurious scrams. Each vent point for ARI in the scram air header consists of two valves in series (see Figure 4.6-5). The valves must be energized to vent the air header. This design is intended to prevent spurious scrams and unnecessary cycling of the power plant.

4.6.7 REFERENCES

4.6-1 Benecki, J. E., "Impact Testing on Collet Assembly for Control Rod Drive Mechanism 7RD B144A," General Electric Company, Atomic Power Equipment Department, APED-5555, November 1967.

4.6-2 NEDE-31096-P, "Licensing Topical Report, Anticipated Transient Without Scram," Response to NRC ATWS Rule 10 CRF 50.62, February 1987.

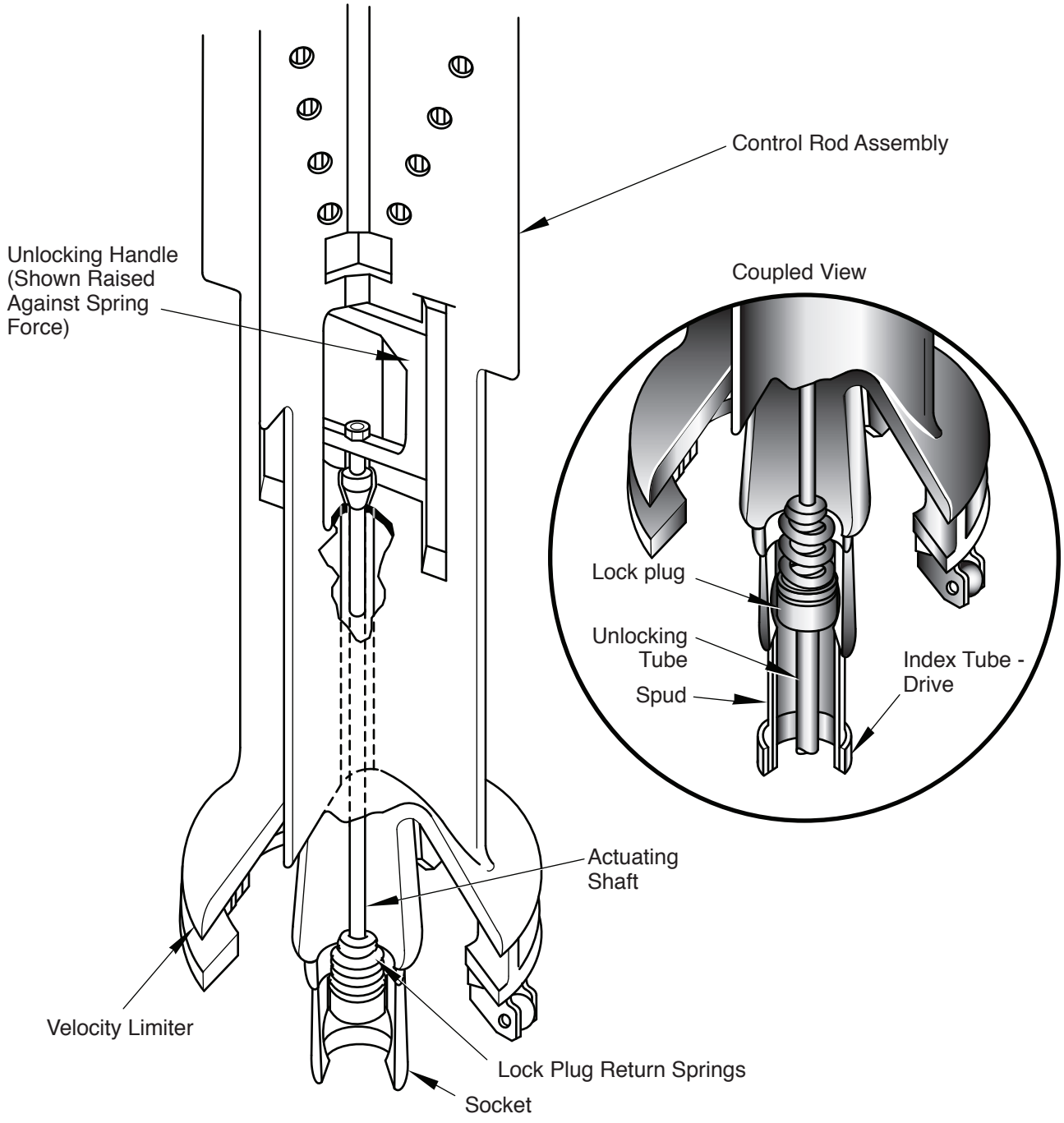

Columbia Generating Station
Final Safety Analysis Report

Control Rod to Control Rod Drive Coupling

Draw. No. 960690.99	Rev.	Figure 4.6-1

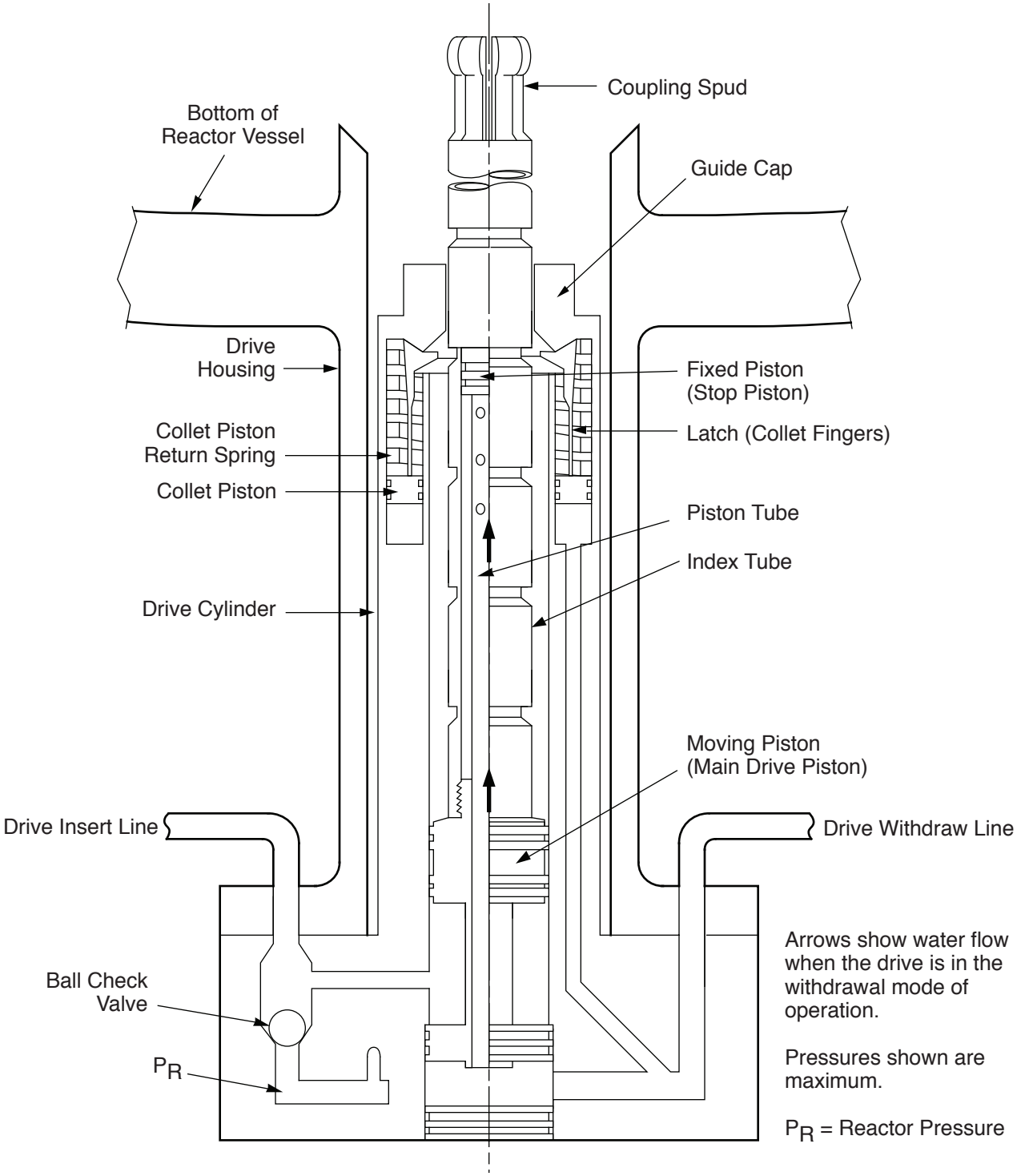

Columbia Generating Station
Final Safety Analysis Report

Control Rod Drive Unit

Draw. No. 960222.99	Rev.	Figure 4.6-2

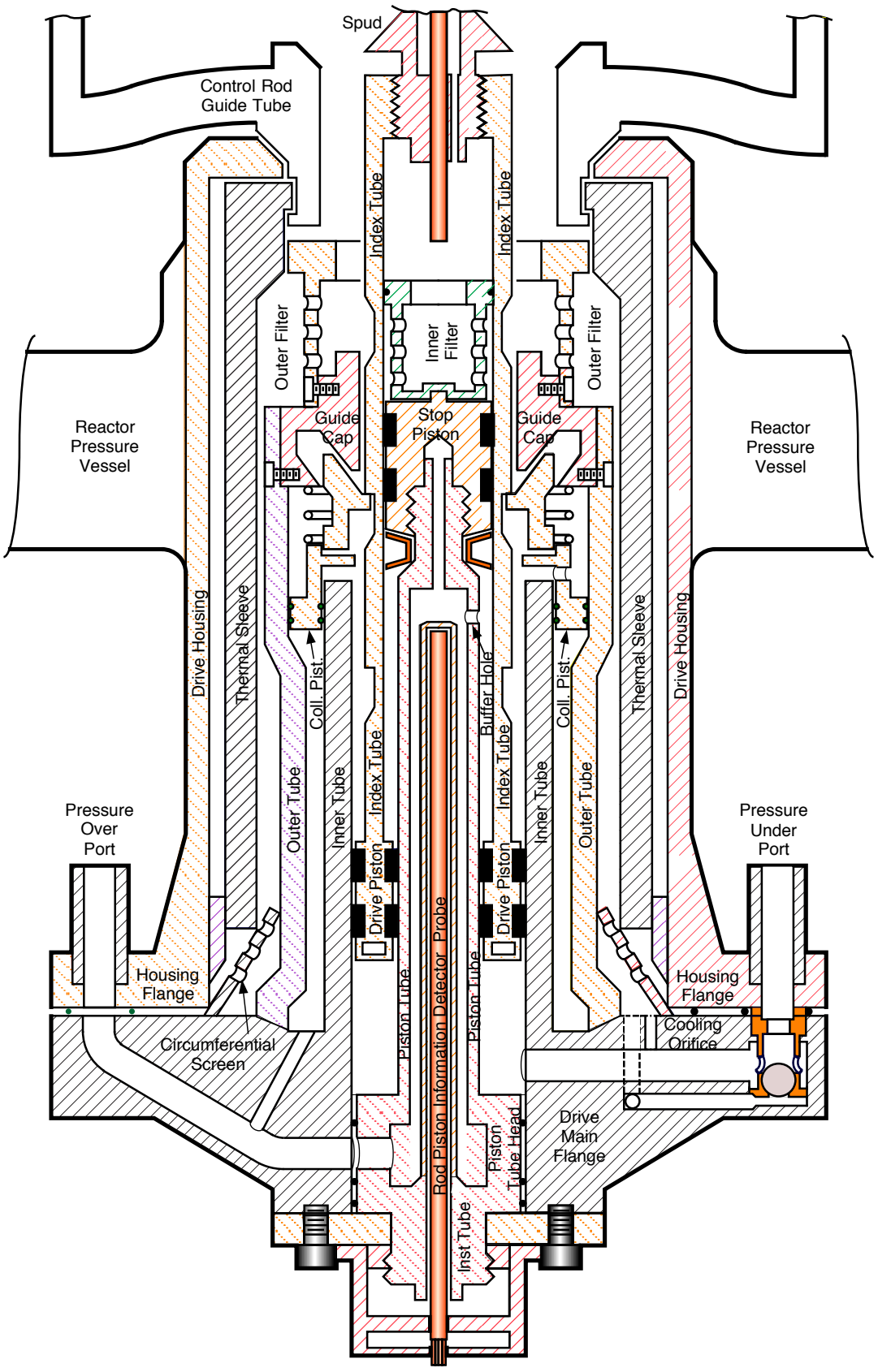

Columbia Generating Station
Final Safety Analysis Report

Control Rod Drive Unit (Schematic)

Draw. No. 960222.96	Rev.	Figure 4.6-3

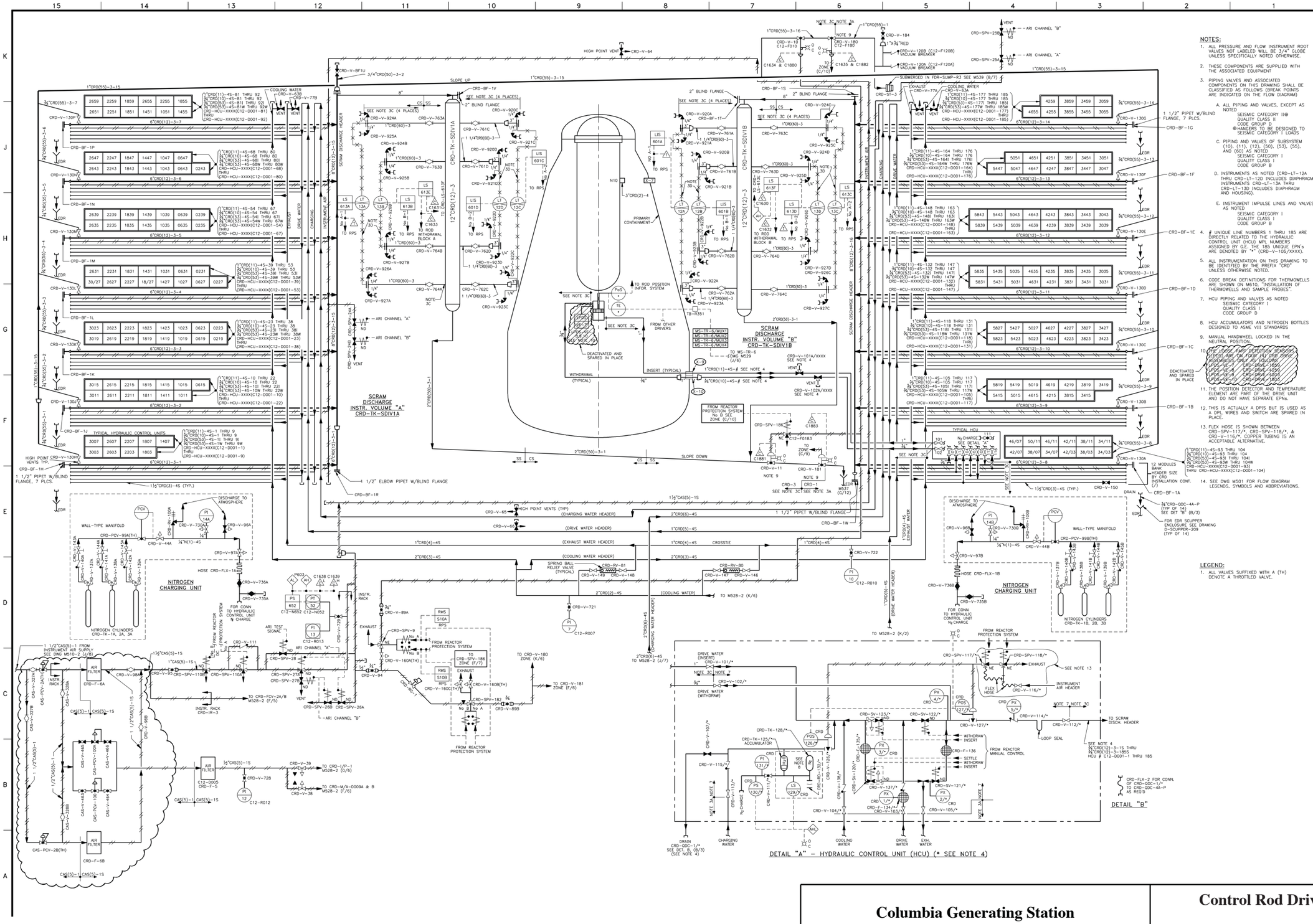
SCRAM DISCHARGE INSTR. VOLUME "A" CRD-TK-SDIV1A
SCRAM DISCHARGE INSTR. VOLUME "B" CRD-TK-SDIV1B
PRIMARY CONTAINMENT
HIGH POINT VENT CRD-V-64
SLOPE UP
SLOPE DOWN
WITHDRAWAL (TYPICAL)
INSERT (TYPICAL)
DEACTIVATED AND SPARED IN PLACE
TYPICAL HYDRAULIC CONTROL UNITS
TYPICAL HCU
NITROGEN CHARGING UNIT
NITROGEN CHARGING UNIT
NITROGEN CYLINDERS CRD-TK-1A, 2A, 3A
NITROGEN CYLINDERS CRD-TK-1B, 2B, 3B
WALL-TYPE MANIFOLD
DISCHARGE TO ATMOSPHERE
FROM REACTOR PROTECTION SYSTEM
TO ROD POSITION INFOR. SYSTEM
TO ROD WITHDRAWAL BLOCK A
TO ROD WITHDRAWAL BLOCK B
TO SCRAM DISCH. HEADER
LOOP SEAL
INSTRUMENT AIR HEADER
FLEX HOSE
DRIVE WATER (INSERT)
DRIVE WATER (WITHDRAW)
CHARGING WATER
COOLING WATER
DRIVE WATER
EXH. WATER
EXHAUST
SUBMERGED IN FDR-SUMP-R3 SEE M539 (B/7)
DETAIL "A" – HYDRAULIC CONTROL UNIT (HCU) (* SEE NOTE 4)
DETAIL "B"
CRD-FLX-2 FOR CONN. OF CRD-GDC-1/* TO CRD-GDC-4A-P AS REQ'D
FOR CONN TO HYDRAULIC CONTROL UNIT N2 CHARGE
FOR EDR SCUPPER ENCLOSURE SEE DRAWING D-SCUPPER-209 (TYP OF 14)
12 MODULES BANK HEADER SIZE BY CRD INSTALLATION CONT. (/)
1 1/2" PIPET W/BLIND FLANGE, 7 PLCS.
1 1/2" ELBOW PIPET W/BLIND FLANGE
1 1/2" PIPET W/BLIND FLANGE
1 1/2" PIPET W/BLIND FLANGE
1 1/2"CAS(5)-1 FROM INSTRUMENT AIR SUPPLY SEE DWG M510-2 (J/8)
TO CRD-FCV-2A/B M528-2 (F/5)
TO CRD-1/P-1 M528-2 (G/6)
TO CRD-M/A-D009A & B M528-2 (F/6)
TO CRD-V-180 ZONE (K/6)
TO CRD-V-181 ZONE (F/6)
TO M528-2 (K/2)
TO M528-2 (K/6)
TO CRD-V-180 ZONE (K/6)
TO CRD-V-181 ZONE (F/6)
TO MS-TR-6 (DWG M529 (J/6)
FROM OTHER DRIVERS
FROM REACTOR PROTECTION SYSTEM No B SEE ZONE (C/10)
TO ZONE (C/9)
TO ZONE (C/10)
ARI CHANNEL "A"
ARI CHANNEL "B"
ARI TEST SIGNAL
ARI CHANNEL "A"
ARI CHANNEL "B"
HIGH POINT VENTS TYP.
HIGH POINT VENTS (TYP) (CHARGING WATER HEADER)
(DRIVE WATER HEADER)
(EXHAUST WATER HEADER)
(COOLING WATER HEADER)
(COOLING WATER)
CROSSTIE
SPRING BALL RELIEF VALVE (TYPICAL)
SCRAM DISCHARGE HEADER
INSTRUMENT AIR
CHARGING
DRIVE WATER
EXHAUST
COOLING WATER
INSTR. RACK
INSTR. RACK CRD-IR-3
AIR FILTER CRD-F-6A
AIR FILTER CRD-F-6B
AIR FILTER C12-D005 CRD-F-5
AIR FILTER CRD-F-6B
CAS-PCV-28(TH)
CRD-V-99A
CRD-V-98B
CRD-V-111
CRD-V-110A
CRD-V-110B
CRD-V-28
CRD-V-27A
CRD-V-27B
CRD-V-26A
CRD-V-26B
CRD-V-94
CRD-V-160A(TH)
CRD-V-160B(TH)
CRD-V-160C(TH)
CRD-V-182
CRD-V-89A
CRD-V-89B
CRD-V-9
CRD-V-721
CRD-V-722
CRD-V-65
CRD-V-66
CRD-V-1W
CRD-V-80
CRD-V-81
CRD-V-146
CRD-V-147
CRD-V-148
CRD-V-149
CRD-V-39
CRD-V-38
CRD-V-728
CRD-V-730A
CRD-V-730B
CRD-V-96A
CRD-V-96B
CRD-V-97A
CRD-V-97B
CRD-V-44A
CRD-V-44B
CRD-V-736A
CRD-V-736B
CRD-V-735A
CRD-V-735B
CRD-V-99A(TH)
CRD-V-99B(TH)
CRD-V-1008
CRD-V-1009
CRD-V-1370
CRD-V-1380
CRD-V-1388
CRD-V-1398
CRD-V-1408
CRD-V-1418
CRD-V-1428
CRD-V-1438
CRD-V-1448
CRD-V-1458
CRD-V-1468
CRD-V-1478
CRD-V-1488
CRD-V-1498
CRD-V-1508
CRD-V-1518
CRD-V-1528
CRD-V-1538
CRD-V-1548
CRD-V-1558
CRD-V-1568
CRD-V-1578
CRD-V-1588
CRD-V-1598
CRD-V-1608
CRD-V-1618
CRD-V-1628
CRD-V-1638
CRD-V-1648
CRD-V-1658
CRD-V-1668
CRD-V-1678
CRD-V-1688
CRD-V-1698
CRD-V-1708
CRD-V-1718
CRD-V-1728
CRD-V-1738
CRD-V-1748
CRD-V-1758
CRD-V-1768
CRD-V-1778

NOTES

1. FOR NOTES & LEGEND SEE M528-1

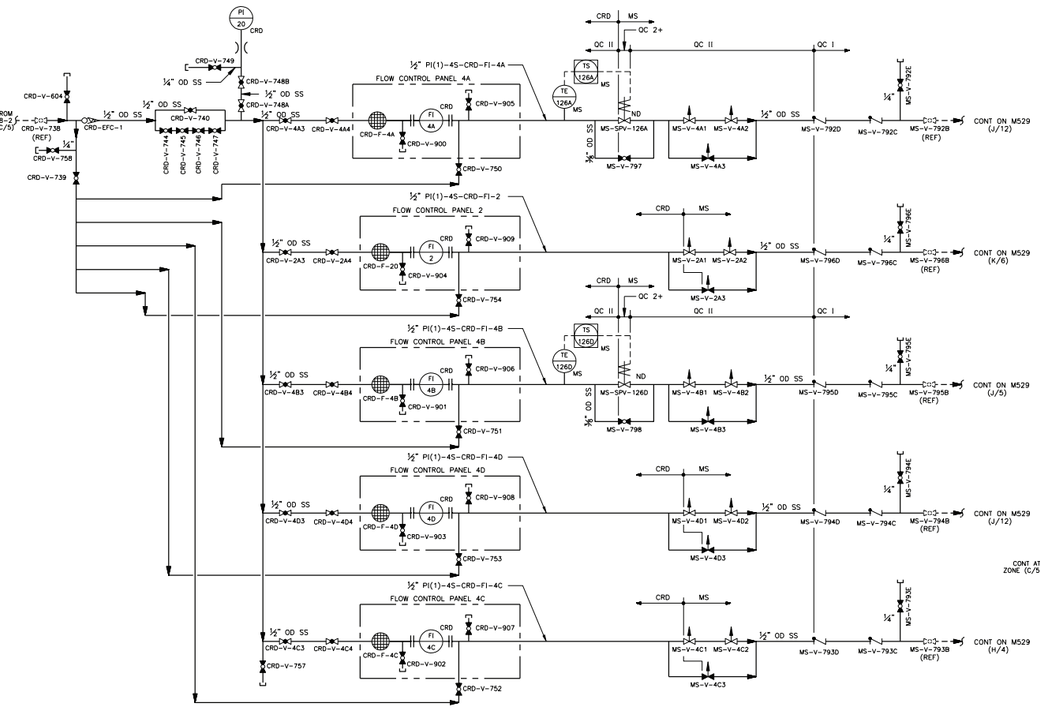

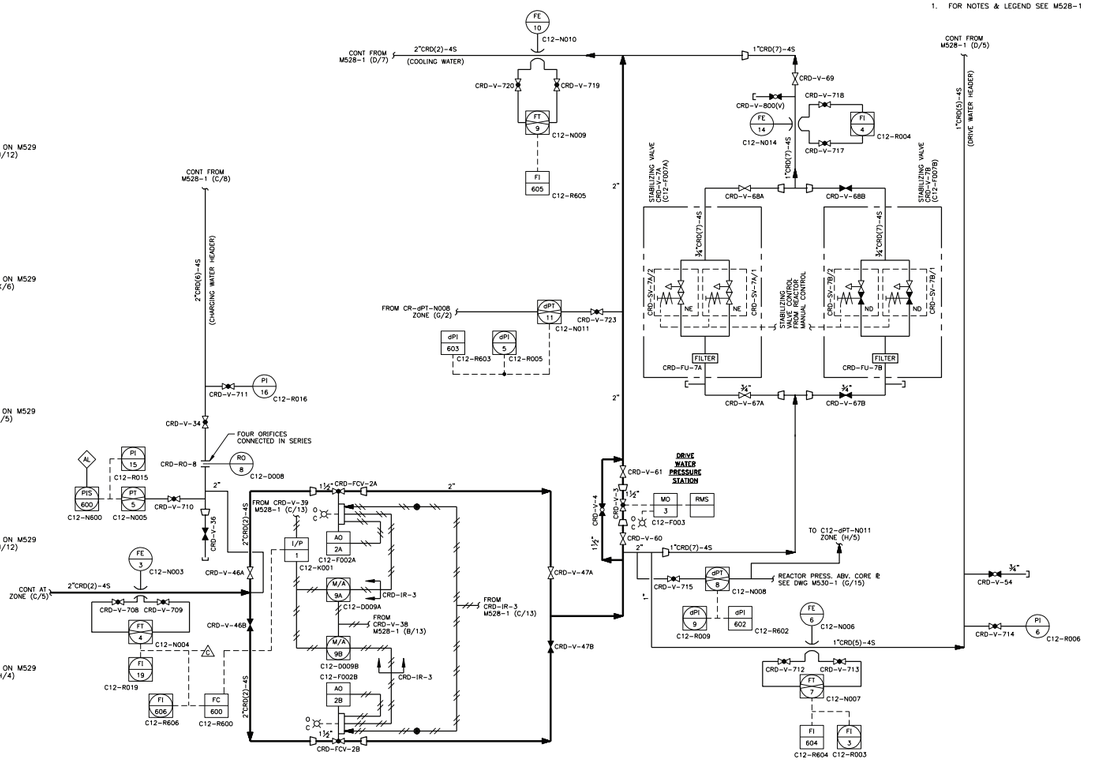

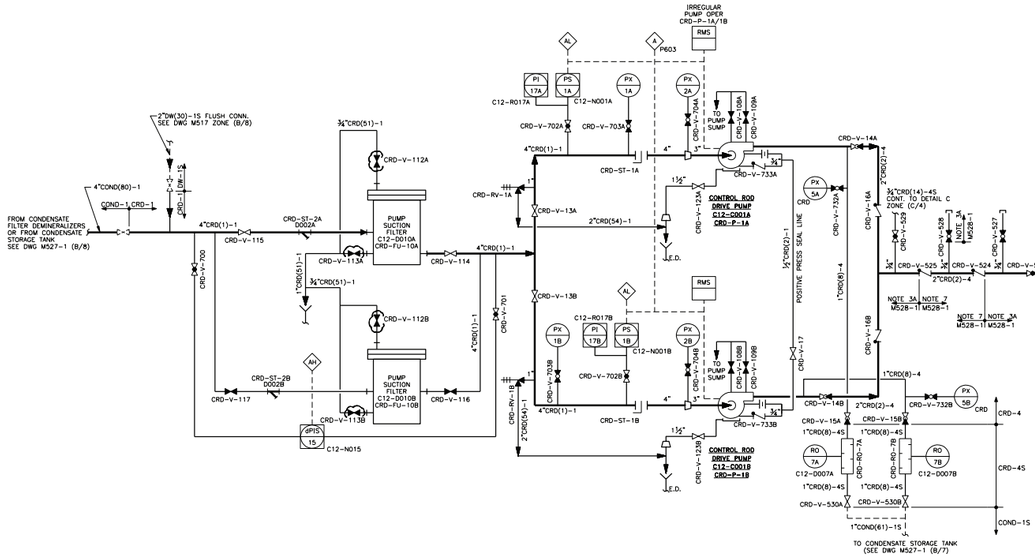

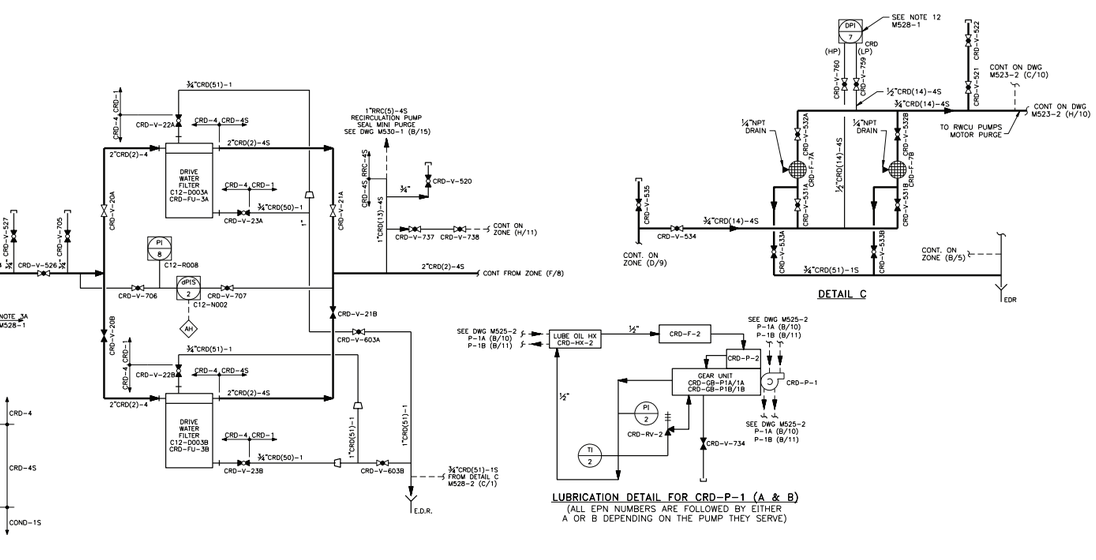

GENERAL ELECTRIC

921D966

TITLE PROCESS DIAGRAM
CONTROL ROD DRIVE HYD SYS
FIRST MADE FOR NUCLEAR BOILER SYS

(C12-1020)

NOTE:
SYSTEM SELECTION OPTIONS ARE INDICATED BY MULTIPLE MPL ITEM NUMBERS

REFERENCE DOCUMENTS	MPL ITEM No
1 CONTROL ROD DRIVE HYD SYS P&ID	C12-1010
2 CONTROL ROD DRIVE HYD SYS FCD	C12-1030
3 DESIGN SPECIFICATION	C12-4010
4 HYDRAULIC CONTROL UNIT	C12-D001
5 PIPING & INSTRUMENT SYMBOLS	A42-1010
6 PROCESS DATA	C12-1020
7 REACTOR WATER CLEAN UP SYS P&ID	533-1010
8 REACTOR RECIRC SYS P&ID	B35-1010

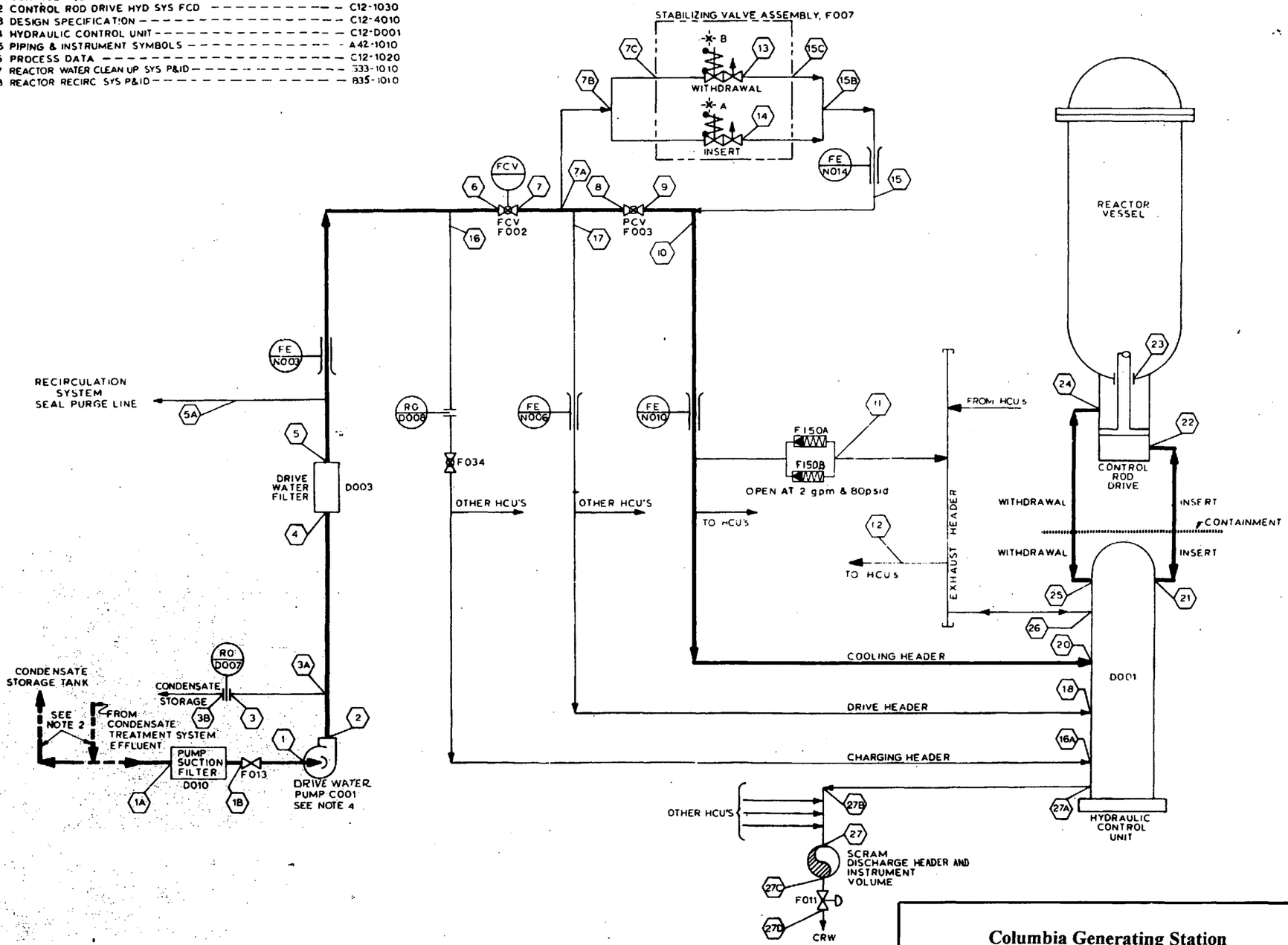

NOTES:

1. FOR DATA PERTAINING TO NUMBERS WITHIN HEXAGONS REFER TO PROCESS DATA REF 6.
2. SOURCE OF CRD SYSTEM WATER SHALL BE NORMALLY FROM CONDENSATE TREATMENT SYSTEM. CONDENSATE STORAGE TANK IS THE ALTERNATE SOURCE IF CONDENSATE TREATMENT SYSTEM IS NOT IN OPERATION. FOR DETAILED DESIGN REQUIREMENTS FOR SOURCE AND QUALITY OF WATER, SEE REF 3.
3. DELETED
4. MAXIMUM ALLOWABLE PUMP SUCTION PRESSURE SHALL BE 50 PSIG.

Columbia Generating Station
Final Safety Analysis Report

Control Rod Drive System (Process Diagram)

Draw. No. 02C12-04,25,1 | Rev. 1 | Figure 4.6-6.1

Form No. 960690

GENERAL ELECTRIC

UNLESS OTHERWISE SPECIFIED USE THE FOLLOWING — APPLIED PRACTICES	SURFACES				MFG NO. 921D966AA	TITLE PROCESS DIAG DATA CONTROL ROD DRIVE HYD SYSTEM
	✓				SHEET NO. 2 OF 2	FIRST MADE FOR

MPL NO. C12-1020

MODE A NORMAL OPERATION

LOCATION ⬡	1A	1	2	3	4	5	5A	6	7	8	9	10	11	12	13
FLOW . GPM	93	93	93	20	73	73	10	63	63	57	57	63	0	0	2
PRESSURE PSIG	21	19	1487	1487	1476	1462	1462	1455	PR • 260	PR • 260	PR • 30	PR • 30	PR	PR	PR • 30

LOCATION ⬡	14	15	16	17	18		20	21	22	23	24	25	26	27	
FLOW . GPM	4	6	0	0	0		.34 MAX	.34 MAX	.34 MAX	.34 MAX	0	0	0	0	
PRESSURE PSIG	PR • 30	PR • 30	1455				PR • 15	PR • 14	PR • 14	PR	PR		PR	0	

CONDITIONS:
1. DRIVES LATCHED
2. PRESSURE OF REACTOR (PR) AT 1000 PSIG.
3. MAXIMUM COOLING FLOW TO DRIVES. MINIMUM REQUIRED PRESSURE AT POSITION 1A IS 20 FEET OF WATER AT 200 GPM.

MODE A SIZES THE COOLING WATER HEADERS.

LINE LOSS FROM LOCATION 10 TO LOCATION 20 SHALL NOT EXCEED 3 PSIG.

MODE B ROD INSERTION

LOCATION ⬡	1A	1	2	3	4	5	5A	6	7	8	9	10	11	12	13
FLOW . GPM	93	93	93	20	73	73	10	63	63	57	57	59	0	.7	2
PRESSURE PSIG	21	19	1487	1487	1476	1462	1462	1455	PR • 260	PR • 260	PR • 30	PR • 30	<PR • 8	<PR • 8	PR • 30

LOCATION ⬡	14	15	16	17	18		20	21	22	23	24	25	26	27	
FLOW . GPM	0	2	0	4	4		0	4	4	1.3	.7	.7	.7	0	
PRESSURE PSIG	PR • 30	PR • 30	1455	PR • 260	PR • 250		PR • 15	PR • 91	PR • 90	PR	PR • 20 MAX	PR • 20 MAX	PR • 8 MAX	0	

CONDITIONS:
1. DRIVE INSERTING
2. PRESSURE OF REACTOR (PR) AT 1000 PSIG.
3. MAXIMUM DRIVING FLOW TO DRIVES

MODE B SIZES THE DRIVE WATER HEADERS.

MODE C SCRAM

LOCATION ⬡	1A	1	2	3	4	5	5A	6	7	8	9	10	11	12	13
FLOW . GPM	45	45	45	20	25	25	10	15	15	15	15	15	15	14.9	0
PRESSURE PSIG	21	21	1550	1550									SEE NOTE 9	SEE NOTE 9	

LOCATION ⬡	14	15	16	17	18		20	21	22	23	24	25	26	27	
FLOW . GPM	0	0	0	0	0		0	90	90	-3.6	- 30	30	0.1 • SEE NOTE 9	APPROX 5565	
PRESSURE PSIG								1167 MIN	731 MIN	PR	256 MAX	94		65 MAX	
														SEE NOTE 10	

CONDITIONS:
1. DRIVES SCRAMMING
2. PRESSURE OF REACTOR (PR) AT 1000 PSIG.
3. FLOWS BASED ON MAXIMUM ROD VELOCITY OF 85 INCHES PER SECOND.

MODE C SIZES THE INSERT AND WITHDRAW LINES.

MODE D SCRAM COMPLETED

LOCATION ⬡	1A	1	2	3	4	5	5A	6	7	8	9	10	11	12	13
FLOW . GPM	200	200	200	20	180	180	10	15	15	15	15	15	15	14.9	0
PRESSURE PSIG	21	19	1210						>PR	>PR	>PR	>PR	>PR	>PR	

LOCATION ⬡	14	15	16	17	18		20	21	22	23	24	25	26	27	
FLOW . GPM	0	0	155	0	0		0	0.92	0.92	0.92	SEE NOTE 9	SEE NOTE 9	0.1	0	
PRESSURE PSIG			988					76	76	PR	65 MAX	65 MAX		65 MAX	
											SEE NOTE 10				

CONDITIONS:
1. SCRAMMING OF DRIVES COMPLETED
2. PRESSURE OF REACTOR (PR) AT 0 PSIG.
3. MAXIMUM CRD SUPPLY PUMP FLOW.

MODE D SIZES THE PUMP SUCTION LINE.

NOTE: MINIMUM ACCUMULATOR PRECHARGE PRESSURE IS 565 PSIG.

Columbia Generating Station Final Safety Analysis Report	Control Rod Drive System (Process Diagram)		
	Draw. No. 02C12-04,26,1	Rev. 1	Figure 4.6-6.2

TABLE I

LOCATION	1A-1B	1B--1	2---6	3A-3B	6--9	7A-7B	7B-7C
DESIGN PRESS. (PSIG.)	150	150	1750	1750	1750	1750	1750
DESIGN TEMP. (DEG F)	150	150	150	150	150	150	150
ESTIMATED LINE SIZE (INCHES)	4	4	2	1	1.5	1	0.75

LOCATION	10-20	11-12	15B-15C	15-15B	16-16A	17-18	12-26
DESIGN PRESS. (PSIG.)	1750	1750	1750	1750	1750	1750	1750
DESIGN TEMP. (DEG F)	150	150	150	150	150	150	150
ESTIMATED LINE SIZE (INCHES)	2**	1	0.75	1	2	1	1

LOCATION	21-22 "SEE NOTE 13"	24-25 "SEE NOTE 13"	27A-27B "SEE NOTE 13"	27B-27 "SEE NOTE 13"	27-27C "SEE NOTE 14"	27C-27D "SEE NOTE 14"	5A
DESIGN PRESS. (PSIG.)	1750	1750	1250	1250	1250	1250	1750
DESIGN TEMP. (DEG F)	150	500 (PEAK)	450*** (PEAK)	450*** (PEAK)	450*** (PEAK)	450*** PEAK)	150
ESTIMATED LINE SIZE (INCHES)	1	0.75	0.75	*	10	2	.75

* SEE CRD SYSTEM DESIGN SPECIFICATION.

** 2 INCH HEADER TO EACH HALF OF THE TOTAL QUANTITY OF HCU'S.

*** MOMENTARY TEMPERATURE THAT OCCURS AT 65 PSIG. REFER TO SPEC 1 FOR MAXIMUM DESIGN PRESSURE AND TEMPERATURE.

NOTES:

1. DEFINITION OF SYMBOLS
   PR - INDICATES PRESSURE OF THE REACTOR
2. MAXIMUM OPERATING TEMPERATURES
   THE MAXIMUM SYSTEM OPERATING TEMPERATURE WILL NOT EXCEED 150 DEG. F. FROM LOCATION 1 THROUGH 27 WITH THE FOLLOWING EXCEPTIONS.

	LOCATION	MAXIMUM TEMP. (DEG. F.)
MODE A -	23	200
MODE A -	23	546
MODE A - (LEAKING SCRAM DISCHARGE VALVE)	24	500
	25	500
	27	280
MODE D -	23	475
	24	475
	25	475
	27	450***

3. MODE A -
   A. MAXIMUM CHARGING WATER PRESSURE SHALL BE 1600 PSIG NOMINAL. ACCUMULATOR PRECHARGE PRESSURE SHALL BE 575 PSIG NOMINAL, 580 PSIG MAXIMUM, AT 70° F.
   B. DELETED
   C. LOCATION 20 - THE CRD COOLING WATER PRESSURE SHALL BE DETERMINED BY THE COOLING WATER FLOW.
   D. LOCATION 23 - MAXIMUM DRIVE COOLING REQUIREMENTS WILL NOT EXCEED 0.34 GPM/DRIVE FOR THE CONDITIONS LISTED. MINIMUM DRIVE COOLING REQUIREMENTS WILL NOT BE LESS THAN 0.20 GPM/DRIVE.
4. MODE B -
   A. LOCATION 13 AND 14 - INSERT VALVE F007-A CLOSES ON DRIVE INSERT SIGNAL. WITHDRAW VALVE F007-B CLOSES ON DRIVE WITHDRAW SIGNAL BUT DOES NOT STAY CLOSED DURING SETTLING.
   B. LOCATION 18 - THE CRD DRIVE WATER PRESSURE SHALL NOT BE LESS THAN PR + 250 PSIG. FOR THE CONDITIONS INDICATED.
5. MODE C -
   A. DELETED
   B. THE TEMPERATURES LISTED IN NOTE 2 FOR POSITION 24, 25 AND 27 MAY BE ASSUMED TO OCCUR LESS THAN 1 PERCENT OF THE OPERATING LIFE OF THE SYSTEM. SEE THE CRD HYDRAULIC SYSTEM DESIGN SPECIFICATION TO DETERMINE CYCLIC STRESS DUE TO THERMAL EXPANSION.
   C. LOCATION 21 TO 22 - THE PRESSURE DROP FROM LOCATION 21 TO 22 SHALL NOT EXCEED 435 PSI AT 90 GPM FOR ANY CRD.
   D. LOCATION 23 - A NEGATIVE FLOW RATE INDICATES FLOW FROM THE REACTOR THROUGH THE DRIVE SEAL, INTO THE CRD. THE MAXIMUM LEAK RATE FROM THE THE REACTOR CAN REACH 10 GPM PER DRIVE.
   E. LOCATION 24 TO 25 - THE PRESSURE DROP FROM LOCATION 24 TO 25 SHALL NOT EXCEED 162 PSI AT 30 GPM FOR ANY CRD.
   F. RESPONSE TIME OF FCV-F002 IS SUCH THAT SCRAM IS COMPLETED BEFORE FCV-F002 STARTS TO CLOSE.
   G. SCRAM DRAIN VALVE F011 AND VENT VALVE F010 CLOSE WITH A SCRAM SIGNAL.
6. MODE D -
   A. DELETED
   B. LOCATION 27 - THE SCRAM DISCHARGE VOLUME SHALL BE SIZED SO THAT THE RESULTING PRESSURE AFTER 100 PERCENT STROKE IS LESS THAN 65 PSIG.
7. MAXIMUM ALLOWABLE PUMP SUCTION PRESSURE SHALL BE 50 PSIG.
8. PROCESS DIAGRAM 92ID966 SHALL BE USED WITH AND FORM PART OF THIS PROCESS DATA. IF THERE ARE ANY CONFLICTS BETWEEN THE PROCESS DIAGRAM AND THIS PROCESS DATA, THE PROCESS DATA SHALL GOVERN.
9. DURING SCRAM, THIS FLOW WILL BE DIRECTED INTO THE SCRAM DISCHARGE VOLUME. FOLLOWING SCRAM, THIS FLOW WILL DECLINE AS VALVE F002 CLOSES AND AS THE SCRAM DISCHARGE VOLUME PRESSURIZES TO EQUAL THE REACTOR PRESSURE. AFTER THE SCRAM DISCHARGE VOLUME AND THE REACTOR VESSEL PRESSURE HAVE EQUALIZED, FLOW WILL BE DIVERTED TO THE REACTOR VESSEL VIA THE CRD WITHDRAW LINES AT A FLOW RATE DEPENDENT ON THE REACTOR PRESSURE:
   I.E. (A.) APPROX. 15 GPM AT "0" PSIG. REACTOR PRESSURE.
   (B.) APPROX. 6 GPM AT "1000" PSIG. REACTOR PRESSURE.
10. THIS VALUE APPLIES IMMEDIATELY FOLLOWING COMPLETION OF SCRAM. PRESSURE WILL SUBSEQUENTLY EQUALIZE WITH REACTOR PRESSURE.
11. DESIGN PRESSURE AND TEMPERATURE SHOWN IN "TABLE I" IS FOR INFORMATION ONLY AND IS THE BASIS FOR DESIGN OF BWRS SUPPLIED EQUIPMENT. ESTIMATED LINE SIZES ARE FOR INFORMATION ONLY. ACTUAL LINE SIZES AS DETERMINED BY THE PIPING DESIGNER SHALL MEET THE PROCESS DATA HYDRAULIC REQUIREMENTS.
12. ALL VALUES SHOWN IN MODES A, B, C, AND D ARE NOMINAL UNLESS OTHERWISE NOTED.
13. INSERT AND WITHDRAWAL PIPING SHALL BE DESIGNED FOR HYDRODYNAMIC LOADS AS A RESULT OF A NORMAL SCRAM AT ZERO & NORMAL REACTOR PRESSURES, SHORT STROKE AND FULL STROKE SCRAM AND A SCRAM WITH FAILED CRD BUFFER. PLANT LOAD COMBINATIONS SHOULD INCLUDE CONSIDERATION OF THOSE SYSTEM HYDRODYNAMIC LOADS.
14. THE SCRAM DISCHARGE VOLUME (SDV) AND ITS VENT AND DRAIN PIPING DESIGN SHALL CONSIDER THE HYDRODYNAMIC LOADS WHICH MAY OCCUR DUE TO 1) SDV ISOLATION AND 2) SDV VENTING AND DRAINING FOLLOWING A SCRAM COMPLETION AT REACTOR OPERATING PRESSURE.

PSIG

FSAR FIG.

Columbia Generating Station Final Safety Analysis Report	Control Rod Drive System (Process Diagram)		
	Draw. No. 02C12-04,26,2	Rev. 3	Figure 4.6-6.3

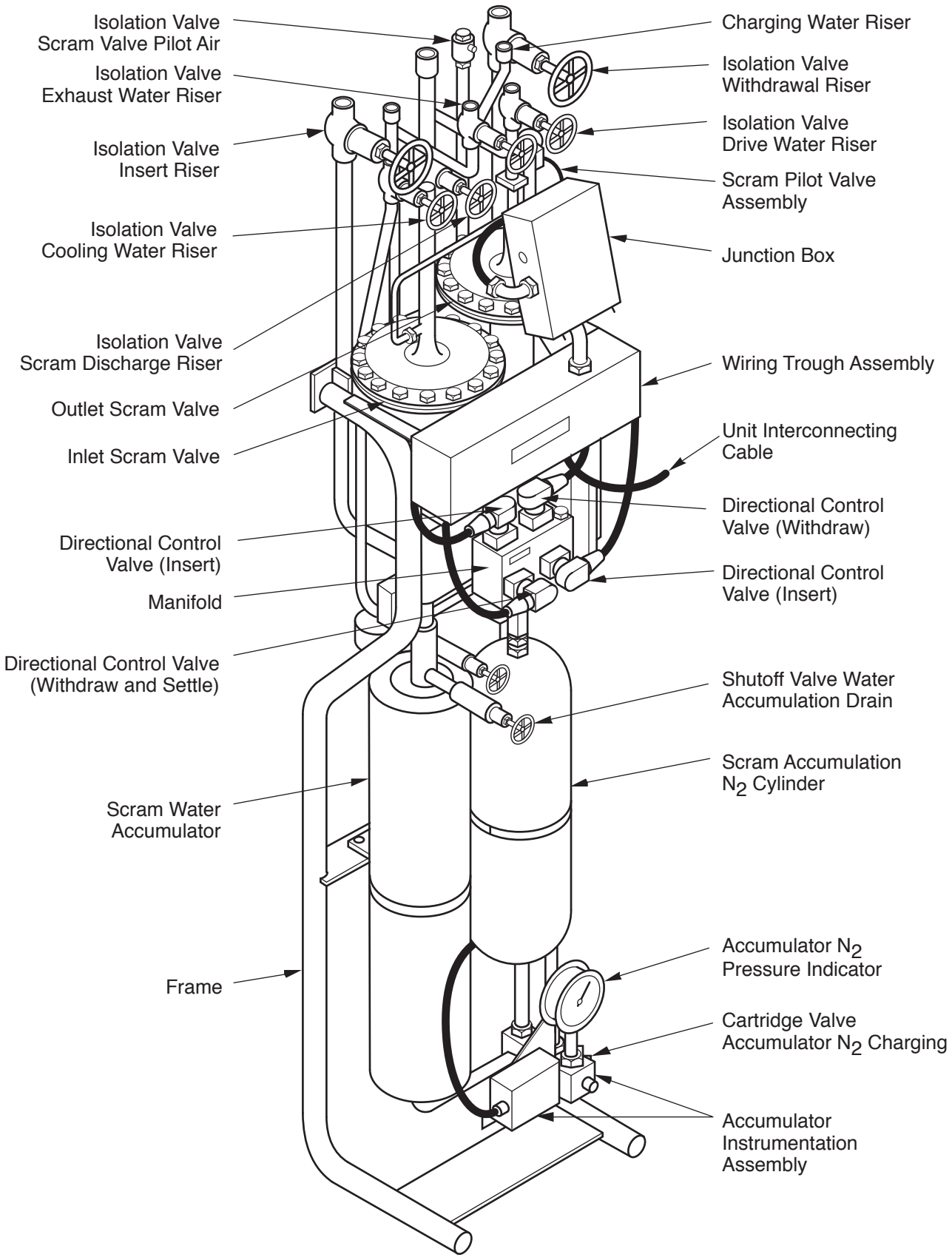

Columbia Generating Station
Final Safety Analysis Report

Control Rod Drive Hydraulic Control Unit

Draw. No. 900547.25	Rev.	Figure 4.6-7

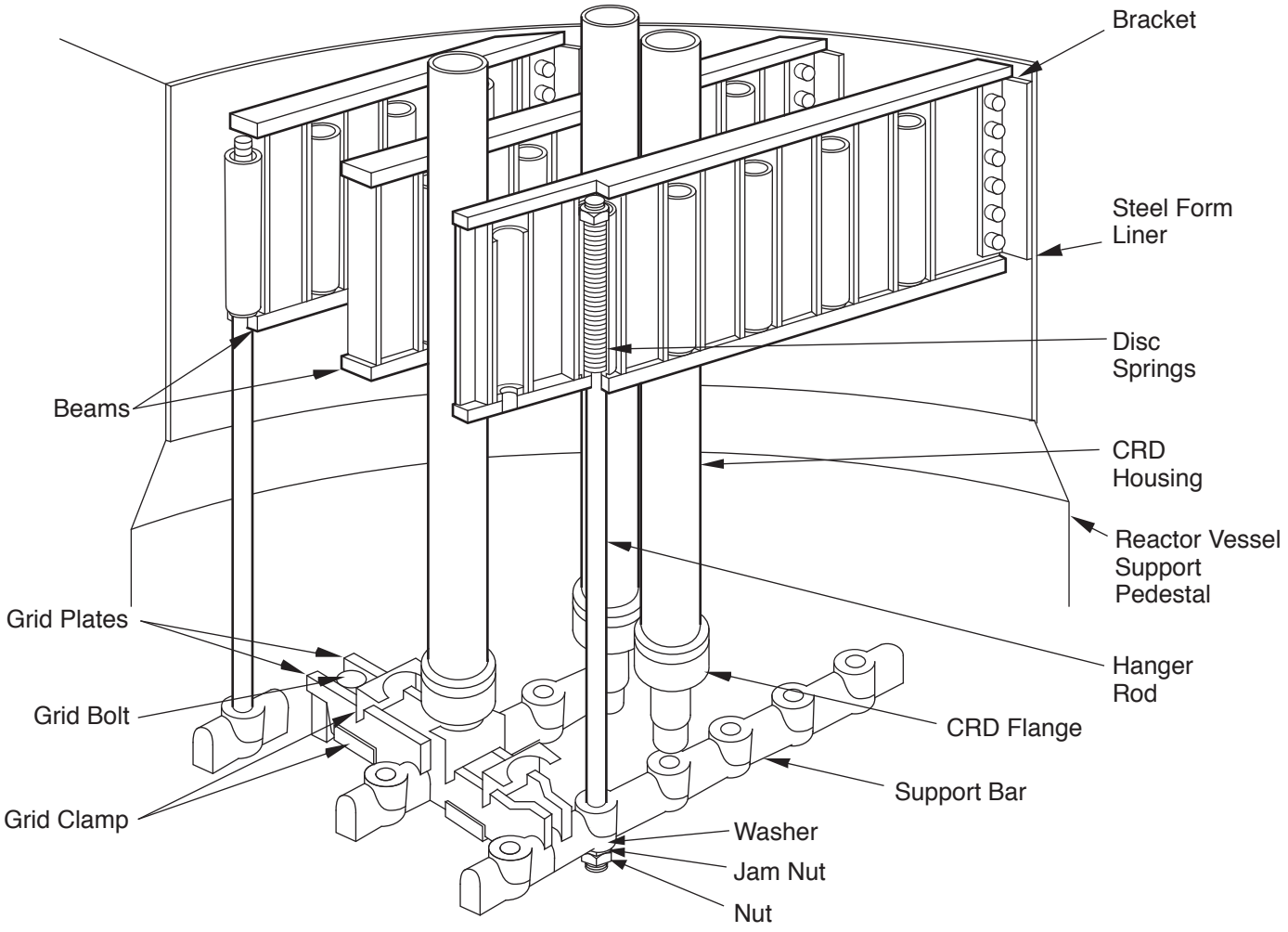

Columbia Generating Station
Final Safety Analysis Report

Control Rod Drive Housing Support

Draw. No. 900547.26	Rev.	Figure 4.6-8

Chapter 5

REACTOR COOLANT SYSTEM AND CONNECTED SYSTEMS

TABLE OF CONTENTS

Section Page

5.1 SUMMARY DESCRIPTION 5.1-1
5.1.1 SCHEMATIC FLOW DIAGRAM 5.1-3
5.1.2 PIPING AND INSTRUMENTATION DIAGRAM 5.1-3
5.1.3 ELEVATION DRAWING 5.1-3

5.2 INTEGRITY OF REACTOR COOLANT PRESSURE BOUNDARY 5.2-1
5.2.1 COMPLIANCE WITH CODES AND CODE CASES 5.2-1
5.2.1.1 Compliance with 10 CFR Part 50, Section 50.55a 5.2-1
5.2.1.2 Applicable Code Cases 5.2-1
5.2.2 OVERPRESSURIZATION PROTECTION 5.2-2
5.2.2.1 Design Bases 5.2-2
5.2.2.1.1 Safety Design Basis 5.2-2
5.2.2.1.2 Power Generation Design Bases 5.2-2
5.2.2.1.3 Discussion 5.2-3
5.2.2.1.4 Safety Valve Capacity 5.2-3
5.2.2.2 Design Evaluation 5.2-4
5.2.2.2.1 Method of Analysis 5.2-4
5.2.2.2.2 System Design 5.2-4
5.2.2.2.3 Evaluation of Results 5.2-5
5.2.2.2.3.1 Safety Valve Capacity 5.2-5
5.2.2.2.3.2 Pressure Drop in Inlet and Discharge 5.2-6
5.2.2.2.3.3 Reload Specific Confirmatory Analysis 5.2-6
5.2.2.3 Piping and Instrument Diagrams 5.2-6
5.2.2.4 Equipment and Component Description 5.2-6
5.2.2.4.1 Description 5.2-6
5.2.2.4.2 Design Parameters 5.2-9
5.2.2.4.2.1 Safety/Relief Valve 5.2-9
5.2.2.5 Mounting of Pressure Relief Devices 5.2-10
5.2.2.6 Applicable Codes and Classification 5.2-10
5.2.2.7 Material Specification 5.2-10
5.2.2.8 Process Instrumentation 5.2-10
5.2.2.9 System Reliability 5.2-10
5.2.2.10 Inspection and Testing 5.2-11
5.2.3 REACTOR COOLANT PRESSURE BOUNDARY MATERIALS 5.2-16
5.2.3.1 Material Specifications 5.2-16

Chapter 5

REACTOR COOLANT SYSTEM AND CONNECTED SYSTEMS

TABLE OF CONTENTS (Continued)

Section — Page

5.2.3.2 Compatibility with Reactor Coolant 5.2-16
5.2.3.2.1 Pressurized Water Reactor Chemistry of Reactor Coolant 5.2-16
5.2.3.2.2 Boiling Water Reactor Chemistry of Reactor Coolant 5.2-16
5.2.3.2.3 Compatibility of Construction Materials with Reactor Coolant 5.2-19
5.2.3.2.4 Compatibility of Construction Materials with External Insulation and Reactor Coolant 5.2-20
5.2.3.3 Fabrication and Processing of Ferritic Materials and Austenitic Stainless Steels 5.2-20
5.2.4 INSERVICE INSPECTION AND TESTING OF THE REACTOR COOLANT PRESSURE BOUNDARY 5.2-21
5.2.4.1 System Boundary Subject to Inspection 5.2-21
5.2.4.2 Arrangement of Systems and Components to Provide Accessibility 5.2-22
5.2.4.2.1 Reactor Pressure Vessel 5.2-23
5.2.4.2.2 Piping, Pumps, and Valves 5.2-24
5.2.4.3 Examination Techniques and Procedures 5.2-24
5.2.4.3.1 Equipment for Inservice Inspection 5.2-24
5.2.4.3.2 Coordination of Inspection Equipment With Access Provisions 5.2-25
5.2.4.3.3 Manual Examination 5.2-25
5.2.4.4 Inspection Intervals 5.2-25
5.2.4.5 Examination Categories and Requirements 5.2-25
5.2.4.6 Evaluation of Examination Results 5.2-25
5.2.4.7 System Leakage and Hydrostatic Pressure Tests 5.2-26
5.2.4.8 Inservice Inspection Commitment 5.2-26
5.2.4.9 Augmented Inservice Inspection to Protect Against Postulated Piping Failures 5.2-26
5.2.4.10 Augmented Inservice Inspection of Reactor Pressure Vessel Feedwater Nozzles 5.2-27
5.2.4.10.1 Preservice Examination 5.2-27
5.2.4.10.2 Inservice Examination 5.2-27
5.2.4.11 Augmented Inservice Inspection for Intergrannular Stress Corrosion Cracking 5.2-27
5.2.4.12 ASME Section XI Repairs/Replacements 5.2-27
5.2.5 DETECTION OF LEAKAGE THROUGH REACTOR COOLANT PRESSURE BOUNDARY 5.2-28
5.2.5.1 Leakage Detection Methods 5.2-28
5.2.5.1.1 Detection of Abnormal Leakage Within the Primary Containment 5.2-28

Chapter 5

REACTOR COOLANT SYSTEM AND CONNECTED SYSTEMS

TABLE OF CONTENTS (Continued)

Section — Page

5.2.5.1.2 Detection of Abnormal Leakage Outside the Primary Containment 5.2-29
5.2.5.2 Leak Detection Devices 5.2-30
5.2.5.3 Indication in the Control Room 5.2-31
5.2.5.4 Limits for Reactor Coolant Leakage 5.2-32
5.2.5.4.1 Total Leakage Rate 5.2-32
5.2.5.4.2 Normally Expected Leakage Rate 5.2-32
5.2.5.5 Unidentified Leakage Inside the Drywell 5.2-33
5.2.5.5.1 Unidentified Leakage Rate 5.2-33
5.2.5.5.2 Length of Through-Wall Flaw 5.2-33
5.2.5.5.3 Criteria to Evaluate the Adequacy and Margin of the Leak Detection System 5.2-34
5.2.5.6 Safety Interfaces 5.2-34
5.2.5.7 Testing and Calibration 5.2-34
5.2.6 REFERENCES 5.2-34

5.3 REACTOR VESSEL 5.3-1
5.3.1 REACTOR VESSEL MATERIALS 5.3-1
5.3.1.1 Materials Specifications 5.3-1
5.3.1.2 Special Processes Used for Manufacturing and Fabrication 5.3-1
5.3.1.3 Special Methods for Nondestructive Examination 5.3-2
5.3.1.4 Special Controls for Ferritic and Austenitic Stainless Steels 5.3-2
5.3.1.5 Fracture Toughness 5.3-2
5.3.1.5.1 Compliance with Code Requirements 5.3-2
5.3.1.5.2 Compliance with 10 CFR 50 Appendix G 5.3-2
5.3.1.5.2.1 Intent of Proposed Approach 5.3-3
5.3.1.5.2.2 Operating Limits Based on Fracture Toughness 5.3-3
5.3.1.5.2.3 Temperature Limits for Boltup 5.3-5
5.3.1.5.2.4 Inservice Inspection Hydrostatic or Leak Pressure Tests 5.3-5
5.3.1.5.2.5 Operating Limits During Heatup, Cooldown, and Core Operation 5.3-6
5.3.1.5.2.6 Reactor Vessel Annealing 5.3-6
5.3.1.6 Material Surveillance 5.3-6
5.3.1.6.1 Positioning of Surveillance Capsules and Method of Attachment for Plant-Specific Surveillance Program 5.3-7
5.3.1.6.2 Time and Number of Dosimetry Measurements 5.3-7
5.3.1.6.3 Neutron Flux and Fluence Calculations 5.3-8
5.3.1.7 Reactor Vessel Fasteners 5.3-8

Chapter 5

REACTOR COOLANT SYSTEM AND CONNECTED SYSTEMS

TABLE OF CONTENTS (Continued)

Section — Page

5.3.2 PRESSURE-TEMPERATURE LIMITS 5.3-9
5.3.2.1 Limit Curves 5.3-9
5.3.2.2 Operating Procedures 5.3-9
5.3.3 REACTOR VESSEL INTEGRITY 5.3-9
5.3.3.1 Design 5.3-10
5.3.3.1.1 Description 5.3-10
5.3.3.1.1.1 Reactor Vessel 5.3-10
5.3.3.1.1.2 Shroud Support 5.3-10
5.3.3.1.1.3 Protection of Closure Studs 5.3-10
5.3.3.1.2 Safety Design Bases 5.3-11
5.3.3.1.3 Power Generation Design Basis 5.3-11
5.3.3.1.4 Reactor Vessel Design Data 5.3-11
5.3.3.1.4.1 Vessel Support 5.3-12
5.3.3.1.4.2 Control Rod Drive Housings 5.3-12
5.3.3.1.4.2.1 Control Rod Drive Return Line 5.3-12
5.3.3.1.4.3 In-Core Neutron Flux Monitor Housings 5.3-12
5.3.3.1.4.4 Reactor Vessel Insulation 5.3-12
5.3.3.1.4.5 Reactor Vessel Nozzles 5.3-12
5.3.3.1.4.6 Materials and Inspection 5.3-14
5.3.3.1.4.7 Reactor Vessel Schematic (BWR) 5.3-14
5.3.3.2 Materials of Construction 5.3-14
5.3.3.3 Fabrication Methods 5.3-15
5.3.3.4 Inspection Requirements 5.3-15
5.3.3.5 Shipment and Installation 5.3-15
5.3.3.6 Operating Conditions 5.3-16
5.3.3.7 Inservice Surveillance 5.3-16
5.3.4 REFERENCES 5.3-17

5.4 COMPONENT AND SUBSYSTEM DESIGN 5.4-1
5.4.1 REACTOR RECIRCULATION PUMPS 5.4-1
5.4.1.1 Safety Design Bases 5.4-1
5.4.1.2 Power Generation Design Bases 5.4-1
5.4.1.3 Description 5.4-1
5.4.1.3.1 Recirculation System Cavitation Consideration 5.4-5
5.4.1.4 Safety Evaluation 5.4-5
5.4.1.5 Inspection and Testing 5.4-6

Chapter 5

REACTOR COOLANT SYSTEM AND CONNECTED SYSTEMS

TABLE OF CONTENTS (Continued)

Section — Page

5.4.2 STEAM GENERATORS (PWR) 5.4-6
5.4.3 REACTOR COOLANT PIPING 5.4-7
5.4.4 MAIN STEAM LINE FLOW RESTRICTORS 5.4-7
5.4.4.1 Safety Design Bases 5.4-7
5.4.4.2 Description 5.4-7
5.4.4.3 Safety Evaluation 5.4-8
5.4.4.4 Inspection and Testing 5.4-8
5.4.5 MAIN STEAM LINE ISOLATION SYSTEM 5.4-9
5.4.5.1 Safety Design Bases 5.4-9
5.4.5.2 Description 5.4-10
5.4.5.3 Safety Evaluation 5.4-12
5.4.5.4 Inspection and Testing 5.4-13
5.4.6 REACTOR CORE ISOLATION COOLING SYSTEM 5.4-14
5.4.6.1 Design Bases 5.4-14
5.4.6.2 System Design 5.4-16
5.4.6.2.1 General 5.4-16
5.4.6.2.1.1 Description 5.4-16
5.4.6.2.1.2 Diagrams 5.4-17
5.4.6.2.1.3 Interlocks 5.4-18
5.4.6.2.2 Equipment and Component Description 5.4-19
5.4.6.2.2.1 Design Conditions 5.4-19
5.4.6.2.2.2 Design Parameters 5.4-20
5.4.6.2.2.3 Overpressure Protection 5.4-25
5.4.6.2.3 Applicable Codes and Classifications 5.4-27
5.4.6.2.4 System Reliability Considerations 5.4-27
5.4.6.2.5 System Operation 5.4-28
5.4.6.2.5.1 Automatic Operation 5.4-28
5.4.6.2.5.2 Test Loop Operation 5.4-29
5.4.6.2.5.3 Steam Condensing (Hot Standby) Operation 5.4-29
5.4.6.2.5.4 Manual Actions 5.4-30
5.4.6.2.5.5 Reactor Core Isolation Cooling Discharge Line Fill System 5.4-30
5.4.6.3 Performance Evaluation 5.4-30
5.4.6.4 Preoperational Testing 5.4-30
5.4.6.5 Safety Interfaces 5.4-30

Chapter 5

REACTOR COOLANT SYSTEM AND CONNECTED SYSTEMS

TABLE OF CONTENTS (Continued)

Section — Page

5.4.7 RESIDUAL HEAT REMOVAL SYSTEM 5.4-30
5.4.7.1 Design Bases 5.4-30
5.4.7.1.1 Functional Design Basis 5.4-31
5.4.7.1.2 Design Basis for Isolation of Residual Heat Removal System from Reactor Coolant System 5.4-33
5.4.7.1.3 Design Basis for Pressure Relief Capacity 5.4-33
5.4.7.1.4 Design Basis With Respect to General Design Criterion 5 ..... 5.4-36
5.4.7.1.5 Design Basis for Reliability and Operability 5.4-36
5.4.7.1.6 Design Basis for Protection from Physical Damage 5.4-37
5.4.7.2 Systems Design 5.4-37
5.4.7.2.1 System Diagrams 5.4-37
5.4.7.2.2 Equipment and Component Description 5.4-38
5.4.7.2.3 Controls and Instrumentation 5.4-40
5.4.7.2.4 Applicable Codes and Classifications 5.4-40
5.4.7.2.5 Reliability Considerations 5.4-41
5.4.7.2.6 Manual Action 5.4-41
5.4.7.3 Performance Evaluation 5.4-41
5.4.7.3.1 Shutdown Cooling With All Components Available 5.4-42
5.4.7.3.2 Shutdown Cooling With Most Limiting Failure 5.4-42
5.4.7.4 Preoperational Testing 5.4-42
5.4.8 REACTOR WATER CLEANUP SYSTEM 5.4-43
5.4.8.1 Design Bases 5.4-43
5.4.8.1.1 Safety Design Bases 5.4-43
5.4.8.1.2 Power Generation Design Bases 5.4-43
5.4.8.2 System Description 5.4-44
5.4.8.3 System Evaluation 5.4-45
5.4.8.4 Demineralizer Resins 5.4-46
5.4.8.5 Reactor Water Cleanup Water Chemistry 5.4-46
5.4.8.5.1 Analytical Methods 5.4-46
5.4.8.5.2 Relationship of Filter-Demineralizer Condition to Water Chemistry 5.4-46
5.4.9 MAIN STEAM LINES AND FEEDWATER PIPING 5.4-47
5.4.9.1 Safety Design Bases 5.4-47
5.4.9.2 Power Generation Design Bases 5.4-47
5.4.9.3 Description 5.4-47
5.4.9.4 Safety Evaluation 5.4-48
5.4.9.5 Inspection and Testing 5.4-48

Chapter 5

REACTOR COOLANT SYSTEM AND CONNECTED SYSTEMS

TABLE OF CONTENTS (Continued)

Section		Page
5.4.10	PRESSURIZER	5.4-48
5.4.11	PRESSURIZER RELIEF DISCHARGE SYSTEM	5.4-48
5.4.12	VALVES	5.4-48
5.4.12.1	Safety Design Bases	5.4-48
5.4.12.2	Description	5.4-48
5.4.12.3	Safety Evaluation	5.4-49
5.4.12.4	Inspection and Testing	5.4-49
5.4.13	SAFETY AND RELIEF VALVES	5.4-50
5.4.13.1	Safety Design Bases	5.4-50
5.4.13.2	Description	5.4-50
5.4.13.3	Safety Evaluation	5.4-50
5.4.13.4	Inspection and Testing	5.4-50
5.4.14	COMPONENT AND PIPING SUPPORTS	5.4-50
5.4.14.1	Safety Design Bases	5.4-51
5.4.14.2	Description	5.4-51
5.4.14.3	Inspection and Testing	5.4-51
5.4.15	HIGH-PRESSURE CORE SPRAY SYSTEM	5.4-52
5.4.16	LOW-PRESSURE CORE SPRAY SYSTEM	5.4-52
5.4.17	STANDBY LIQUID CONTROL SYSTEM	5.4-52
5.4.18	REFERENCES	5.4-52

Chapter 5

REACTOR COOLANT SYSTEM AND CONNECTED SYSTEMS

LIST OF TABLES

Number	Title	Page
5.2-1	Exceptions to Conformance to 10 CFR 50.55a Reactor Coolant Pressure Boundary Components	5.2-37
5.2-2	Reactor Coolant Pressure Boundary Component Code Case Interpretations	5.2-38
5.2-3	Nuclear System Safety/Relief Setpoints	5.2-39
5.2-4	Systems Which May Initiate During Safety Valve Capacity Overpressure Event	5.2-40
5.2-5	Sequence of Events for Figure 5.2-2	5.2-41
5.2-6	Design Temperature, Pressure and Maximum Test Pressure for RCPB Components	5.2-42
5.2-7	Reactor Coolant Pressure Boundary Materials	5.2-45
5.2-8	Water Sample Locations	5.2-48
5.2-9	IHSI Summary Prior to First Refueling GL 88-01 Category B Welds	5.2-49
5.2-10	IHSI Summary During First Refueling GL 88-01 Category B Welds	5.2-50
5.2-11	Main Steam Isolation Valves Material Information	5.2-51
5.2-12	Summary of Isolation/Alarm of System Monitored and the Leak Detection Methods Used	5.2-52
5.3-1	10 CFR 50 Appendix G Matrix	5.3-19
5.3-2	Plate Material Cross Reference	5.3-23

Chapter 5

REACTOR COOLANT SYSTEM AND CONNECTED SYSTEMS

LIST OF TABLES (Continued)

Number	Title	Page
5.3-3	Weld Material Cross Reference	5.3-24
5.3-4	Plate Material	5.3-25
5.3-5	Weld Material	5.3-26
5.3-6	Vessel Beltline Plate	5.3-29
5.3-7	Vessel Beltline Weld Material Chemistry	5.3-30
5.3-8	10 CFR 50 Appendix H Matrix	5.3-31
5.3-9	Reactor Vessel Beltline Minimum Wall Thickness and Diameter	5.3-33
5.4-1	Reactor Coolant Pressure Boundary Pump and Valve Description	5.4-53
5.4-2	Reactor Recirculation System Design Characteristics	5.4-58
5.4-3	*Operating Experience of Ingersoll-Rand Emergency Core Cooling Systems Pumps*	5.4-60
5.4-4	*Operating Experience of Similar Ingersoll-Rand Pumps for BWR Projects Under Review*	5.4-61
5.4-5	Reactor Water Cleanup System	5.4-62
5.4-6	Safety and Relief Valve for Piping Systems Connected to the Reactor Coolant Pressure Boundary	5.4-63

Chapter 5

REACTOR COOLANT SYSTEM AND CONNECTED SYSTEMS

LIST OF FIGURES

Number	Title
5.1-1	Rated Operating Conditions of the Boiling Water Reactor
5.1-2	Coolant Volumes of the Boiling Water Reactor
5.2-1	Simulated Safety Relief Valve Spring Mode Characteristic Used for Capacity Sizing Analysis
5.2-2	MSIV Closure with Flux Scram - Nominal Safety Setpoint +3% 6 SRV Out-of-Service
5.2-3	Peak Vessel Pressure Versus Safety Valve Capacity
5.2-4	Time Response of Pressure Vessel For Pressurization Events
5.2-5	Nuclear Boiler System (P&ID)
5.2-6	Safety/Relief Valve Schematic Elevation
5.2-7	Safety/Relief Valve and Steam Line Schematic
5.2-8	Schematic of Safety Valve With Auxiliary Actuating Device
5.2-9	Safety Valve Lift Versus Time Characteristics
5.2-10	Conductance Versus pH as a Function of Chloride Concentration of Aqueous Solution at 25°C
5.2-11	Deleted
5.3-1	Pressure Temperature Limits – Curves A through C (Sheets 1 through 3)
5.3-2	Vessel Beltline Plate and Weld Seam Identification
5.3-3	Nominal Reactor Vessel Water Level Trip and Alarm Elevation Settings

Chapter 5

REACTOR COOLANT SYSTEM AND CONNECTED SYSTEMS

LIST OF FIGURES (Continued)

Number	Title
5.3-4	Bracket for Holding Surveillance Capsule
5.3-5	Reactor Vessel
5.3-6	Feedwater Nozzle
5.3-7	Feedwater Sparger
5.4-1	Recirculation System Evaluation and Isometric
5.4-2	RRC Pump Dynamic Head - Flow Curve
5.4-3	RRC Pump Speed - Torque Curve
5.4-4	Recirculation Pump Head, NPSH, Flow and Efficiency Curves
5.4-5	Operating Principle of Jet Pump
5.4-6	Core Flooding Capability of Recirculation System
5.4-7	Reactor Recirculation System - P&ID (Sheets 1 and 2)
5.4-8	Main Steam Line Flow Restrictor Location
5.4-9	Main Steam Line Isolation Valve
5.4-10	Reactor Core Isolation Cooling Pump Performance Curve (Constant Flow)
5.4-11	Reactor Core Isolation Cooling System - P&ID
5.4-12	Reactor Core Isolation Cooling System Process Diagram
5.4-13	Reactor Core Isolation Cooling Pump Performance Curve
5.4-14	Typical Strainer

Chapter 5

REACTOR COOLANT SYSTEM AND CONNECTED SYSTEMS

LIST OF FIGURES (Continued)

Number	Title
5.4-15	Residual Heat Removal System - P&ID (Sheets 1 through 4)
5.4-16	Residual Heat Removal System Process Diagram
5.4-17	Residual Heat Removal System Process Data (Sheets 1 and 2)
5.4-18	Residual Heat Removal (LPCI) Pump Characteristics (S/N 0473-111) P-2A
5.4-19	Residual Heat Removal (LPCI) Pump Characteristics (S/N 0801MP004399-1) P-2B
5.4-20	Residual Heat Removal (LPCI) Pump Characteristics (S/N 0473112) P-2C
5.4-21	Vessel Coolant Temperature Versus Time (Two Heat Exchangers Available)
5.4-22	Reactor Water Cleanup System - P&ID (Sheets 1 through 3)
5.4-23	Reactor Water Cleanup System Process Diagram (Sheets 1 and 2)
5.4-24	Filter/Demineralization System P&ID
5.4-25	Vessel Coolant Temperature Versus Time (One Heat Exchanger Available)

Chapter 5

REACTOR COOLANT SYSTEM AND CONNECTED SYSTEMS

5.1 SUMMARY DESCRIPTION

The reactor coolant system includes those systems and components which contain or transport fluids coming from, or going to the reactor core. These systems form a major portion of the reactor coolant pressure boundary (RCPB). This chapter provides information regarding the reactor coolant system and pressure-containing appendages out to and including isolation valving. This grouping of components is defined as follows:

The RCPB includes all pressure-containing components such as pressure vessels, piping, pumps, and valves, which are

a. Part of the reactor coolant system, or

b. Connected to the reactor coolant system, up to and including any and all of the following:

   1. The outermost containment isolation valve in system piping that penetrates primary reactor containment,

   2. The second of the two valves normally closed during normal reactor operation in system piping that does not penetrate primary reactor containment, and

   3. The reactor coolant system safety/relief valves.

Section 5.4 discusses the various subsystems to the RCPB.

The nuclear system pressure relief system protects the reactor coolant pressure boundary from damage due to overpressure. To protect against overpressure, pressure-operated relief valves are provided that can discharge steam from the nuclear system to the suppression pool. The pressure relief system also acts to automatically depressurize the nuclear system in the event of a loss-of-coolant accident (LOCA) in which the high-pressure core spray (HPCS) system fails to maintain reactor vessel water level. Depressurization of the nuclear system allows the low-pressure core cooling systems to supply enough cooling water to adequately cool the fuel. Section 5.2.5 establishes the limits on nuclear system leakage inside the drywell so that appropriate action can be taken before the integrity of the nuclear system process barrier is impaired.

The reactor vessel and appurtenances are described in Section 5.3. The major safety consideration for the reactor vessel is concerned with the ability of the vessel to function as a radioactive material barrier. Various combinations of loading are considered in the vessel design. The vessel meets the requirements of various applicable codes and criteria. The possibility of brittle fracture is considered, and suitable design, material selection, material surveillance activities, and operational limits are established that avoid conditions where brittle fracture is possible.

The reactor recirculation system provides coolant flow through the core. Adjustment of the core coolant flow rate changes reactor power output, thus providing a means of following plant load demand without adjusting control rods. The recirculation system is designed to provide a slow coast down of flow so that fuel thermal limits cannot be exceeded as a result of recirculation system malfunctions. The arrangement of the recirculation system routing is such that a piping failure cannot compromise the integrity of the floodable inner volume of the reactor vessel.

Main steam line flow restrictors of the venturi-type are installed in each main steam line inside the primary containment. The restrictors are designed to limit the loss-of-coolant resulting from a main steam line break outside the primary containment. The coolant loss is limited so that reactor vessel water level remains above the top of the core during the time required for the main steam isolation valves (MSIVs) to close. This action protects the fuel barrier.

The MSIVs automatically isolate the reactor coolant pressure boundary in the event a pipe break occurs downstream of the isolation valves. This action limits the loss-of-coolant and the release of radioactive materials from the nuclear system. Two isolation valves are installed on each main steam line; one is located inside, and the other is located outside the primary containment. In the event that a main steam line break occurs inside the containment, closure of the other isolation valve outside the primary containment acts to seal the containment itself.

The reactor core isolation cooling (RCIC) system provides makeup water to the core during a reactor shutdown in which feedwater flow is not available. The system is started automatically upon receipt of a low reactor water level signal or manually by the operator. Water is pumped to the core by a turbine pump driven by reactor steam.

The residual heat removal (RHR) system includes a number of pumps and heat exchangers that can be used to cool the nuclear system under a variety of situations. During normal shutdown and reactor servicing, the RHR system removes residual and decay heat. The RHR system allows decay heat to be removed whenever the main heat sink (main condenser) is not available (e.g., hot standby). One mode of RHR operation allows the removal of heat from the primary containment following a LOCA. Another operational mode of the RHR system is

low-pressure coolant injection (LPCI). The LPCI operation is an engineered safety feature for use during a postulated LOCA. This operation is described in Section 6.3. The low-pressure core spray (LPCS) system also provides protection to the nuclear system.

The reactor water cleanup system recirculates a portion of reactor coolant through a filter-demineralizer subsystem to remove particulate and dissolved impurities from the reactor coolant. It also removes excess coolant from the reactor system under controlled conditions.

5.1.1 SCHEMATIC FLOW DIAGRAM

Schematic flow diagrams of the reactor coolant system denoting all major components, principal pressures, temperatures, flow rates, and coolant volumes for normal steady-state operating conditions at rated power are presented in Figures 5.1-1 and 5.1-2.

5.1.2 PIPING AND INSTRUMENTATION DIAGRAM

Piping and instrumentation diagrams covering the systems included within the reactor coolant system and connected systems are presented in the following:

a. The nuclear boiler, main steam, and feedwater systems shown in Figure 10.3-2,
b. Recirculation system shown in Figure 5.4-7,
c. RCIC system shown in Figure 5.4-11,
d. RHR system shown in Figures 5.4-16 and 5.4-17,
e. Reactor water cleanup system shown in Figure 5.4-22,
f. HPCS system shown in Figure 6.3-4,
g. LPCS system shown in Figure 6.3-4, and
h. Standby liquid control system shown in Figure 9.3-14.

5.1.3 ELEVATION DRAWING

An elevation drawing showing the principal dimensions of the reactor and coolant system in relation to the containment is shown in Figures 1.2-11 and 1.2-12.

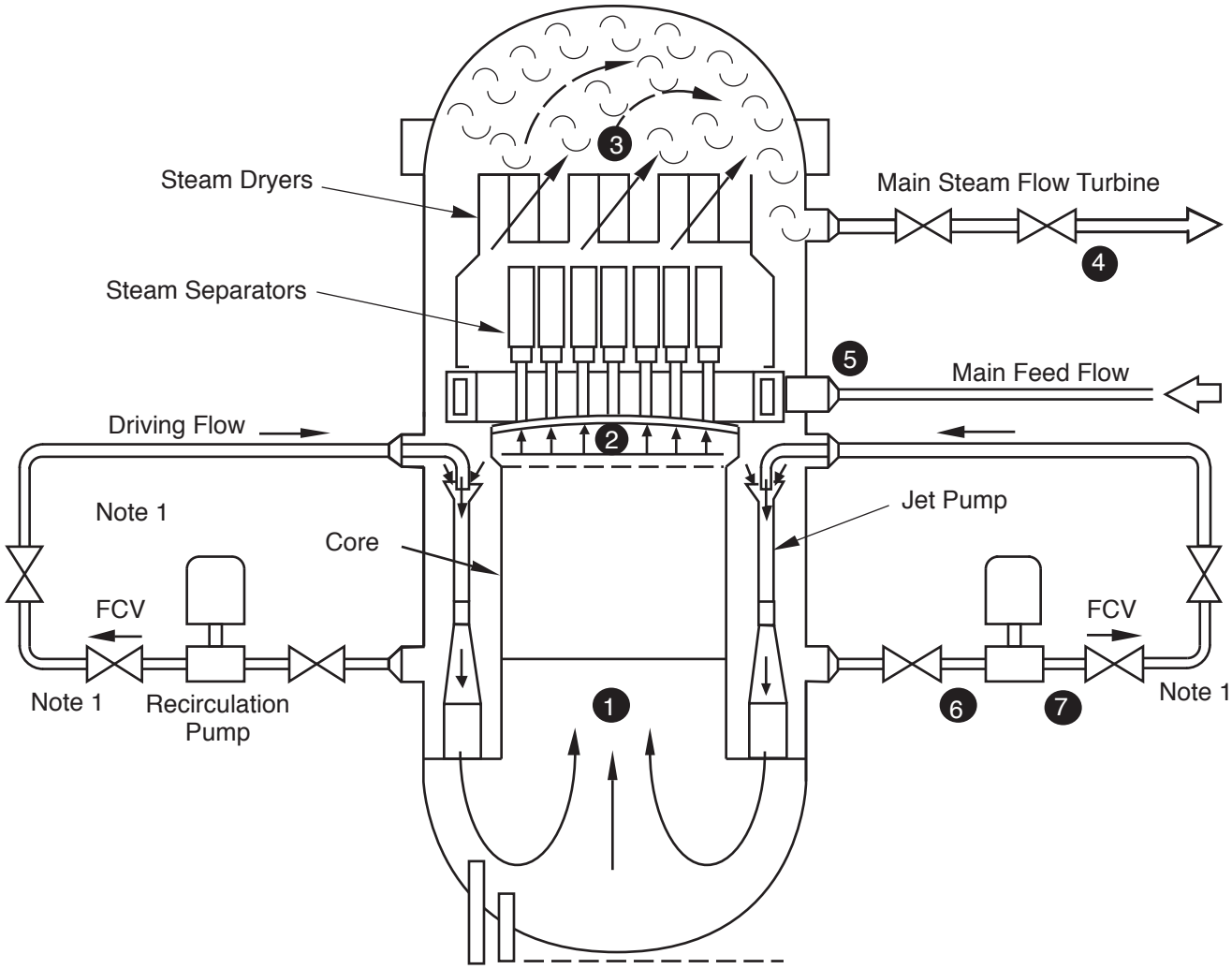

	PRESSURE (psia)	FLOW (lb/hr)	TEMP. (°F)	ENTHALPY (Btu/lb)
1. Core Inlet	1069 #	108.5 x 10^6*	534 #	528.5
2. Core Outlet	1047 #	108.5 x 10^6	550 #	639.9 #
3. Separator Outlet (Steam Dome)	1035	15.28 x 10^6	549 #	1191.0
4. Steam Line (2nd Isolation Valve)	999	15.28 x 10^6	545 #	1191.0
5. Feedwater Inlet (Includes RWCU Return Flow)	1063 #	15.4 x 10^6	422	399.7
6. Recirculating Pump Suction	1037 #	32 x 10^6 #	534 #	528.4 #
7. Recirculating Pump Discharge	1327 #	32 x 10^6 #	534.4	529.5

* Channel Bypass - Nominally 10%
Note 1: The FCVs are kept in mechanically blocked full open position.
Note 2: These values identified by # are based upon 3486 MWt and were dispositioned as having insignificant change from or effect to the operating conditions for 3544 MWt.

Columbia Generating Station Final Safety Analysis Report	**Rated Operating Conditions of the Boiling Water Reactor**		
	Draw. No. **900547.44**	Rev.	Figure **5.1-1**

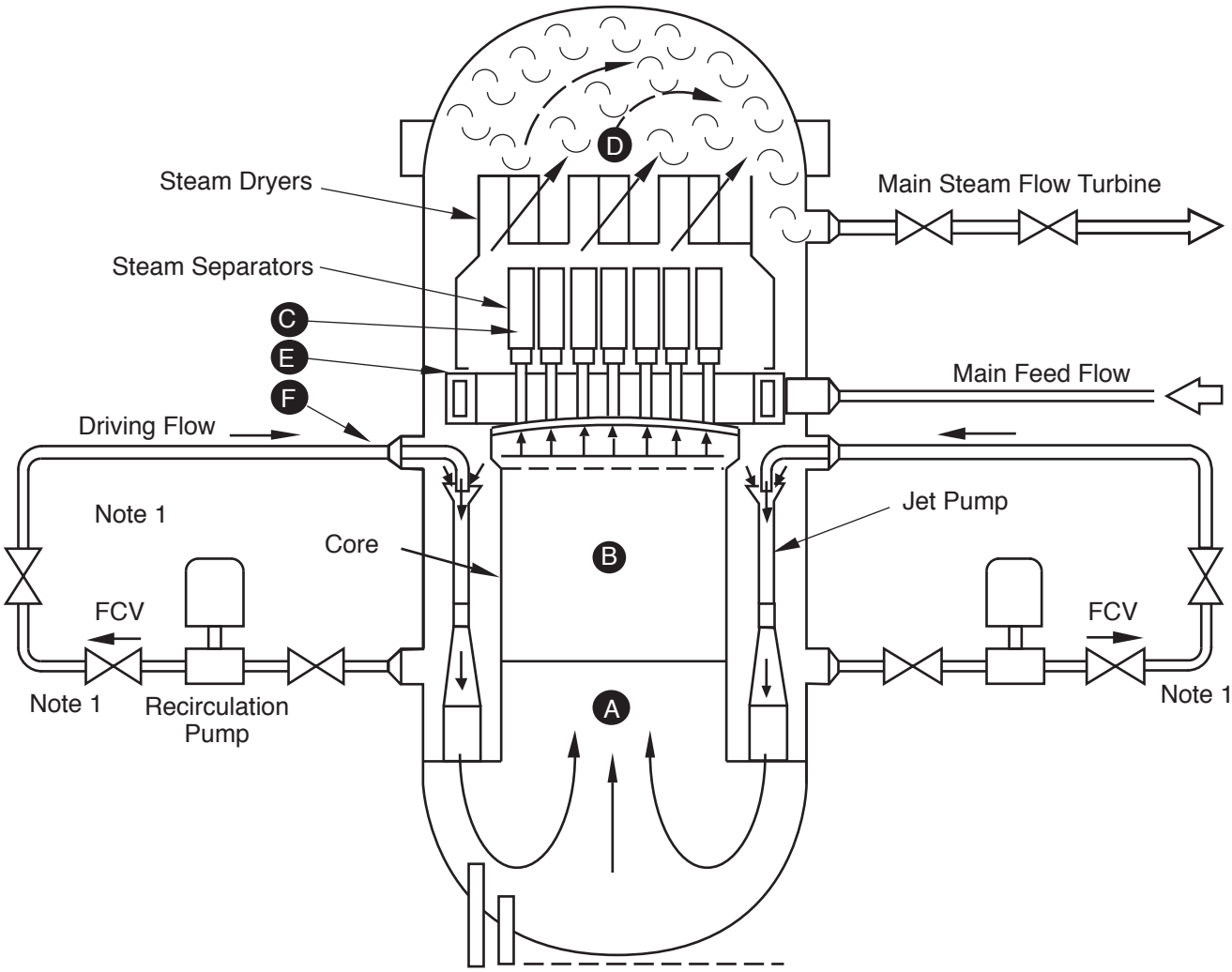

	Volume of Fluid (ft^3)
A. Lower Plenum	4010
B. Core	1990
C. Upper Plenum and Separators	2290
D. Dome (Above Normal Water Level)	7160
E. Downcomer Region	5210
F. Recirculating Loops and Jet Pumps	1010

Note1: The FCVs are kept in mechanically blocked full open position.

Columbia Generating Station Final Safety Analysis Report	**Coolant Volumes of the Boiling Water Reactor**		
	Draw. No. **960690.04**	Rev.	Figure **5.1-2**

5.2 INTEGRITY OF REACTOR COOLANT PRESSURE BOUNDARY

This section discusses measures employed to provide and maintain the integrity of the reactor coolant pressure boundary (RCPB) for the plant design lifetime.

5.2.1 COMPLIANCE WITH CODES AND CODE CASES

5.2.1.1 Compliance with 10 CFR Part 50, Section 50.55a

Table 3.2-1 shows compliance with the rules of 10 CFR Part 50.55a "Codes and Standards." The American Society of Mechanical Engineers (ASME) Code edition, applicable addenda, and component dates are in accordance with 10 CFR 50.55a except for those RCPB components listed in Table 5.2-1. The design, fabrication, and testing of the RCPB components listed in Table 5.2-1 were in accordance with the recognized codes and standards in effect at the time the components were ordered as shown in the table. The code edition and applicable addenda that would be required by strict interpretation of the rules set forth in 10 CFR 50.55a are identified in Table 5.2-1.

Application for Columbia Generating Station (CGS) was filed with the Commission in August 1971. At that time a construction permit was expected before the end of the 1972, but requests for additional seismic data in August 1972 caused the issuance of the construction permit to go beyond the end of the year to March 19, 1973. As is common practice in the utility industry, Energy Northwest proceeded with the engineering, design, and material and components procurement in anticipation of the award of a construction permit to meet construction schedules. Had the construction permit been issued as initially expected, the requirements of 10 CFR 50.55a would have been met to the letter of the law.

However, in each instance of exception the ASME Code version applied was one addenda earlier (6 months) than the code version required by the rules of 10 CFR 50.55a. The changes embodied in the later ASME Code addenda were reviewed. It was concluded that the addenda required by the rules of 10 CFR 50.55a affected documentation format but imposed no new technical requirements or changes in quality control procedures from the code version applied in the procurement of the components. The level of safety and quality provided by conformance to the earlier code edition and addenda applied in procurement is equivalent to that which would be required by strict application of the rules of 10 CFR 50.55a. The effort and expense of recertification of these components, which had all been shipped to the construction site, would not have provided a compensating increase in the level of safety and quality.

5.2.1.2 Applicable Code Cases

The reactor pressure vessel (RPV) and appurtenances and the RCPB piping, pumps and valves, were designed, fabricated, and tested in accordance with the applicable edition of the ASME

Code, Section III, including the addenda that were mandatory at the order date for the applicable components. This is in compliance with the intent of Regulatory Guides 1.84 and 1.85. Section 50.55a of 10 CFR Part 50 requires code case approval only for Class 1 components. These code cases contain requirements or special rules which may be used for the construction of pressure-retaining components of Quality Group Classification A. The various ASME Code case interpretations that were applied to components in the RCPB are listed in Table 5.2-2. Code cases listed in Table 5.2-2 are those used in the original construction of CGS. Other code cases that are adopted for use, as approved by Regulatory Guides 1.147, 1.84, 1.85, or specifically approved by the Regulatory Authority for use at CGS, are specified in the component's design specification as required by ASME Section III.

5.2.2 OVERPRESSURIZATION PROTECTION

5.2.2.1 Design Bases

Overpressurization protection is provided in conformance with 10 CFR 50, Appendix A, General Design Criterion 15.

5.2.2.1.1 Safety Design Basis

The nuclear pressure-relief system is designed to

a. Prevent overpressurization of the nuclear system that could lead to the failure of the RCPB,

b. Provide automatic depressurization for small breaks in the nuclear system occurring with maloperation of the high-pressure core spray (HPCS) system so that the low-pressure coolant injection (LPCI) and the low-pressure core spray (LPCS) systems can operate to protect the fuel barrier (see Section 6.3.2.2.2),

c. Permit verification of its operability, and

d. Withstand adverse combinations of loadings and forces resulting from operation during abnormal, accident, or special event conditions.

5.2.2.1.2 Power Generation Design Bases

The nuclear pressure relief system safety/relief valves (SRV) have been designed to meet the following power generation bases:

a. Discharge to the containment suppression pool, and

b. Correctly reclose following operation so that maximum operational continuity can be obtained.

5.2.2.1.3 Discussion

The ASME Boiler and Pressure Vessel Code (B&PV Code) requires that each component designed to meet Section III be protected from overpressure under upset conditions. The code allows a peak allowable pressure of 110% of design pressure under upset conditions. The code specifications for safety valves require that (a) the lowest safety valve setpoint will be set at or below design pressure, and (b) the highest safety valve setpoint will be set so that total accumulated pressure does not exceed 110% of the design pressure for upset conditions. The SRVs are designed to open by means of either of two modes of operation as discussed in Chapter 15. The safety (spring) setpoints are listed in Table 5.2-3 and satisfy the first of the above-mentioned ASME Code specifications for safety valves because all valves open at less than the nuclear system design pressure of 1250 psig.

The automatic depressurization capability of the nuclear system pressure relief system is evaluated in Sections 6.3 and 7.3.

The following detailed criteria are used in selection of SRVs:

a. Must meet requirements of ASME Code, Section III,

b. Valves must qualify for 100% of nameplate capacity credit for overpressure protection function, and

c. Must meet other performance requirements such as response time, etc., as necessary to provide relief functions.

The SRV discharge piping is constructed in accordance with the ASME Code, Section III, 1971 Edition through the Winter 1973 Addenda.

5.2.2.1.4 Safety Valve Capacity

The safety valve capacity of this plant is adequate to limit the primary system pressure, including transients, to the requirements of the ASME B&PV Code, Section III, 1971 Edition through the Summer 1971 Addenda.

Table 5.2-4 lists the systems which could initiate during the safety valve capacity overpressure event.

5.2.2.2 Design Evaluation

5.2.2.2.1 Method of Analysis

To design the pressure protection for the nuclear boiler system, extensive analytical models representing all essential dynamic characteristics of the system are simulated on a large computing facility. These models include the hydrodynamics of the flow loop, the reactor kinetics, the thermal characteristics of the fuel and its transfer of heat to the coolant, and all the principal controller features, such as feedwater flow, recirculation flow, reactor water level, pressure, and load demand. These are presented with all their principal nonlinear features in models that have evolved through extensive experience and favorable comparison of analysis with actual boiling water reactor (BWR) test data.

A detailed description of the models is documented in licensing topical reports, References 5.2-1 and 5.2-7. Safety/relief valves are simulated in the nonlinear representation, and the models thereby allow full investigation of the various valve response times, valve capacities, and actuation setpoints that are available in applicable hardware systems.

The typical capacity characteristic as modeled is represented in Figure 5.2-1 for the spring mode of operation. The associated turbine bypass, turbine control valve (TCV), and main steam isolation valve (MSIV) characteristics are also simulated in the models.

The associated bypass, TCV, main steam isolation characteristics, and anticipated transients without scram (ATWS) pump trip are also represented fully in the models.

5.2.2.2.2 System Design

The overpressure protection system must accommodate the most severe pressurization transient. There are two major transients, the closure of all MSIVs and a turbine generator trip with a coincident failure of the turbine steam bypass system valves, that represent the most severe abnormal operational transients resulting in a nuclear system pressure rise. The evaluation of transient behavior with final plant configuration has shown that the isolation valve closure is slightly more severe when credit is taken only for indirect derived scrams; therefore, it is used as the overpressure protection basis event and shown in Figure 5.2-2. Table 5.2-5 lists the sequence of events of the various systems assumed to operate during the main steam line isolation closure with flux scram event.

Compliance to ASME Code overpressure protection requirements for introduction of GNF2 fuel has been conservatively demonstrated for the limiting overpressure event. The GE thermal-hydraulic and nuclear coupled transient code TRACG (References 5.2-7 and 5.2-8) was used to obtain system response and peak vessel pressure. The setpoints are listed in Table 5.2-3. The evaluation, based on reactor operation at 100% of uprated power, end-of-cycle nuclear dynamic parameters, an initial dome pressure of 1035 psia (nominal uprated dome

pressure), six SRVs with lowest safety setpoints out of service, and SRV opening pressures at 3% above nominal setpoint values resulted in a maximum reactor pressure of 1311 psig.

The scram reactivity curve is shown in Figure 5.2-2.

5.2.2.2.3 Evaluation of Results

5.2.2.2.3.1 Safety Valve Capacity. The required SRV capacity is determined by analyzing the pressure rise from an MSIV closure with flux scram transient. The plant is assumed to be operating at the turbine-generator design conditions at a nominal vessel dome pressure of 1035 psia. The analysis hypothetically assumes the failure of the direct MSIV position scram. The reactor is shut down by the backup, high neutron flux scram. For the analysis, the spring-action safety valve setpoints used are in the range of 1236 to 1256 psia. The TRACG analysis indicates that the design valve capacity is capable of maintaining adequate margin below the peak ASME Code allowable pressure in the nuclear system (1375 psig). Figure 5.2-2 shows the result of the TRACG analysis. The sequence of events in Table 5.2-5, assumed in these analyses, were investigated to meet code requirements and to evaluate the pressure relief system exclusively.

Under Section III of the ASME B&PV Code, credit can be allowed for a scram from the reactor protection system. In addition, credit is also taken for the protection circuits which are indirectly derived when determining the required SRV capacity.

The backup reactor high neutron flux scram is conservatively applied as a design basis in determining the required capacity of the pressure relieving dual purpose SRVs. Application of the direct position scrams in the design basis could be used since they qualify as acceptable pressure protection devices when determining the required SRV capacity of nuclear vessels under the provisions of the ASME Code. The SRVs are operated in a relief mode (pneumatically) at setpoints lower than those specified under the safety function. This ensures sufficient margin between anticipated relief mode closing pressures and valve spring forces for proper seating of the valves.

The typical parametric relationship between peak vessel (bottom) pressure and SRV capacity for the MSIV transient with high flux scram is described in Figure 5.2-3. Also shown in Figure 5.2-3 is the peak vessel (bottom) pressure for position scram with 18-valve capacity. Pressures shown for flux scram will result only with multiple failure in the redundant direct scram system.

The typical time response of the vessel pressure to the MSIV transient with flux scram is illustrated in Figure 5.2-4. This shows that the pressure at the vessel bottom exceeds 1250 psig for less than 7 sec and does not reach the limit of 1375 psig.

5.2.2.2.3.2 Pressure Drop in Inlet and Discharge. Pressure drop in the piping from the reactor vessel to the valves is taken into account in calculating the maximum vessel pressures.

Pressure drop in the discharge piping to the suppression pool is limited by proper discharge line sizing to prevent back-pressure on each SRV from exceeding 40% of the valve inlet pressure, thus ensuring choked flow in the valve orifice and no reduction of valve capacity due to the discharge piping. Each SRV has its own separate discharge line.

5.2.2.2.3.3 Reload Specific Confirmatory Analysis. The calculated vessel pressure for MSIV inadvertent closure may be dependent upon the fuel design and core loading pattern. Compliance with the ASME upset limit is demonstrated by cycle-dependent analysis just prior to the operation of that cycle. The results are reported in Supplemental Reload Licensing Report (Reference 5.2-11).

5.2.2.3 Piping and Instrumentation Diagrams

See Figure 5.2-5 which shows the schematic location and number of pressure-relieving devices. The schematic arrangement of the SRVs is shown in Figures 5.2-6 and 5.2-7.

5.2.2.4 Equipment and Component Description

5.2.2.4.1 Description

The nuclear pressure relief system consists of SRVs located on the main steam lines between the reactor vessel and the first isolation valve within the drywell.

Chapter 15 discusses the events which are expected to activate the primary system SRVs. The chapter also summarizes the number of valves expected to operate during the initial blowdown of the valves and the expected duration of this first blowdown. For several of the events it is expected that the lowest set SRV will reopen and reclose as generated heat drops into the decay heat characteristics. The pressure increase and relief cycle will continue with lower frequency and shorter relief discharges as the decay heat drops off and until such time as the residual heat removal (RHR) system can dissipate this heat. The duration of each relief discharge should, in most cases, be less than 30 sec. Remote manual actuation of the valves from the control room is recommended to minimize the total number of these discharges, with the intent of achieving extended valve seat life and reducing challenges to the SRV.

A schematic of the main SRV is shown in Figure 5.2-8. It is opened by either of two modes of operation:

a. The spring mode of operation which consists of direct action of the steam pressure against a spring-loaded disk that will pop open when the valve inlet

pressure force exceeds the spring force. Figure 5.2-9 depicts typical valve lift versus opening time characteristics; and

b. The power-actuated mode of operation which consists of using an auxiliary actuating device consisting of a pneumatic piston/cylinder and mechanical linkage assembly which opens the valve by overcoming the spring force, even with valve inlet pressure equal to zero psig.

The pneumatic operator is so arranged that if it malfunctions it will not prevent the valve disk from lifting if steam inlet pressure reaches the spring lift set pressure.

For overpressure SRV operation (self-actuated or spring lift mode), the spring load establishes the safety valve opening setpoint pressure and is set to open at setpoints designated in Table 5.2-3. In accordance with the ASME Code, full lift in this mode of operation is attained at a pressure not greater than 3% above the setpoint.

To prevent backpressure from affecting the spring lift setpoint, each valve is provided with a bellows and balancing piston to counteract the effects of any static backpressure which may be present in the discharge line before the valve is opened to discharge steam. The bellows isolates steam in the valve discharge chamber from the valve's internals. If the bellows fails, the balancing piston serves as a functional backup by presenting an effective piston area to the back pressure equal to the valve seat area, thus balancing it so there is essentially no net back pressure effect on the setpoint (Figure 5.2-8).

The safety function of the SRV is a backup to the relief function described below. The spring-loaded valves are designed and constructed in accordance with ASME III, 1971 Edition, Paragraph NB-7640, as safety valves with auxiliary actuating devices.

Each SRV is provided with its own pneumatic accumulator and inlet check valve to provide high assurance the valve will actuate in the power-actuated (relief) mode when its pneumatic solenoid valve is energized. The pneumatic accumulator has sufficient capacity to provide one SRV actuation at approximately 1000 psig valve inlet pressure. Although no credit is taken under ASME Code Section III for overpressure protection by the SRVs in their power-actuated mode, power actuation of the SRV will limit peak reactor pressure in the majority of overpressure transients.

Safety/relief valve actuation in the relief mode is initiated by pressure switches (one per valve) which sense reactor steam space pressure at lower values than the spring mode inlet steam opening pressure. The pressure switches initiate the opening of the SRVs by energizing the pneumatic solenoids (one per valve) at the relief setpoints designated in Table 5.2-3.

When the solenoid is actuated, the delay time, maximum elapsed time between receiving the overpressure signal at the valve actuator and the actual start of valve motion, will not exceed

0.1 sec. The maximum full stroke opening time will not exceed 0.15 sec with 1000 psig steam at the valve inlet.

The SRVs can be operated in the power-actuated mode by remote-manual controls from the main control room.

The SRVs are designed to operate to the extent required for overpressure protection in the following accident environments:

a. 340°F for a 3-hr period, at drywell design pressure,
b. 320°F for an additional 3-hr period, at drywell design pressure,
c. 250°F for an additional 18-hr period, at 25 psig drywell pressure, and
d. 200°F during the next 99 days at 20 psig drywell pressure.

The automatic depressurization system (ADS) utilizes selected SRVs for depressurization of the reactor (see Section 6.3). Each of the SRVs utilized for automatic depressurization is equipped with an air accumulator and check valve arrangement. These accumulators ensure that the valves can be held open following failure of the air supply to the accumulators. The designed pneumatic supply to the ADS accumulator is such that, following a failure of the safety-related pneumatic supply to the accumulator, at least two valve actuations can occur with the drywell at 70% of design pressure. For a discussion of the noninterruptible air supply to the ADS valves, see Section 9.3.1. Three ADS SRVs and their associated solenoid pilot valves (SPV) are qualified for the full post-LOCA time frame for long-term cooling. All other SRVs and their SPVs are qualified for 24 hr post-LOCA to provide overpressure protection capability.

The valve position indication (VPI) and the tailpipe temperature indication systems are discussed in Section 7.5.2.

Each SRV discharges steam through a discharge line to a point below the minimum water level in the suppression pool. Safety/relief valve discharge line piping from the SRV to the suppression pool consists of two parts. The first part is attached at one end to the SRV and at its other end penetrates and is welded to a 28-in. downcomer (considered a pipe anchor). The main steam piping, including this portion of the SRV discharge piping, is analyzed as a complete system. This portion of the SRV discharge line is classified as Quality Group C and Seismic Category I down to the jet deflector plate just above the diaphragm floor (through which it is rigidly guided) and Quality Group B and Seismic Category I from the jet deflector plate to the downcomer.

The second part of the SRV discharge piping extends from the downcomer (anchor) to the suppression pool. Because of the anchor on this part of the line, it is physically decoupled from the main steam header and is, therefore, analyzed as a separate piping system. In analyzing this part of the discharge piping in accordance with the requirements of Quality Group B, the following load combination was considered as a minimum:

a. Pressure and temperature,
b. Dead weight, and
c. Fluid dynamic loads due to SRV operation.

As a part of the preoperational and startup testing of the main steam lines, movement of the SRV discharge lines were inspected with negligible vibration observed.

The SRV discharge piping is designed to limit valve outlet pressure to 40% of maximum valve inlet pressure with the valve open. Water in the line more than a few feet above suppression pool water level would cause excessive pressure at the valve discharge when the valve is again opened. For this reason, redundant 10-in. vacuum relief valves are provided on each SRV discharge line to prevent drawing an excessive amount of water up into the line as a result of steam condensation following termination of relief operation. Each vacuum relief valve pair is situated with the valves in parallel, the discharge being routed to a common tee in the SRV discharge line.

The nuclear pressure relief system automatically depressurizes the nuclear system sufficiently to permit the LPCI and LPCS systems to operate as a backup for the HPCS system. Further descriptions of the operation of the automatic depressurization feature are found in Sections 6.3 and 7.3.1.1.1.

5.2.2.4.2 Design Parameters

Table 5.2-6 lists design temperature, pressure, and maximum test pressure for the RCPB components. The specified operating transients for components within the RCPB are given in Section 3.9. Refer to Section 3.7 for discussion of the input criteria for design of Seismic Category I structures, systems, and components.

A summary of the number of cycles for transients used in design and fatigue analysis is listed in Table 3.9-1 and categorized under the appropriate design condition (i.e., normal, upset, emergency, and faulted).

The design requirements established to protect the principal components of the reactor coolant system against environmental effects are discussed in Section 3.11.

5.2.2.4.2.1 Safety/Relief Valve. The discharge area of the valve is 16.117 $in.^2$ and the coefficient of discharge KD is equal to 0.966, as certified by the National Board of Boiler and Pressure Vessel Inspectors.

The design pressure and temperature of the valve inlet and outlet are 1250 psig at 575°F and 625 psig at 500°F, respectively.

The valves have been designed to achieve the maximum practical number of actuations consistent with state-of-the-art technology. Cyclic testing has demonstrated that the valves are capable of at least 60 actuation cycles between required maintenance.

See Figure 5.2-8 for a schematic cross section of the valve.

5.2.2.5 Mounting of Pressure Relief Devices

The pressure relief devices are located on the main steam piping headers. The mounting consists of a special contour nozzle and an oversized flange connection. This provides a high integrity connection that accounts for the thrust, bending, and torsional loadings which the main steam pipe and relief valve discharge pipe are subjected to.

In no case will allowable valve flange loads be exceeded nor will the stress at any point in the piping exceed code allowables for any specified combination of loads. The design criteria and analysis methods for considering loads due to SRV discharge is contained in Section 3.9.3.3.

5.2.2.6 Applicable Codes and Classification

The RCPB overpressure protection system is designed to satisfy the requirements of Section III, Subsection NB, of the ASME B&PV Code. The general requirements for protection against overpressure as given NB-7120 of Section III of the code recognize that RCPB overpressure protection is one function of the reactor protective systems and allows the integration of pressure relief devices with the protective systems of the nuclear reactor. Hence, credit is taken for the scram protective system as a complementary pressure protection device.

5.2.2.7 Material Specification

Pressure retaining components of SRVs are constructed only from ASME Section III, Class 1 designated materials.

5.2.2.8 Process Instrumentation

Overpressure protection process instrumentation is listed in Table 1 of Figure 5.2-5 and shown in Figure 10.3-2.

5.2.2.9 System Reliability

Overpressure protection system reliability is principally a function of the SRVs in their spring-opening mode of operation. No credit is taken in the ASME Code Section III required overpressure protection report for power actuation of the SRVs to provide protection against overpressure.

Section 5.2.2.10 discusses the inspection and testing conducted to ensure high SRV reliability. As demonstrated by the extensive qualification and production testing, the valves are very reliable.

In addition to SRV testing to ensure high SRV quality, an extensive in-depth quality assurance program was followed in the manufacture and production testing of the valves to provide assurance of high quality.

A significant amount of BWR operating experience was been accumulated on this type of SRV, approximately 150 individual valve years, only one "stuck-open relief valve" had occurred. This was due to an air solenoid valve sticking open after it was deenergized, thus holding the SRV open in the power-actuated mode. Proper maintenance procedures are incorporated into the instruction manual to preclude recurrence.

This type of SRV has demonstrated good inservice operability similar to that demonstrated by the qualification test program.

In summary, this type of SRV has demonstrated excellent reliability, both in qualification testing and in actual BWR operation.

5.2.2.10 Inspection and Testing

To verify the design of the SRV used will reliably operate, several SRVs were subjected to qualification test programs. These qualification test programs demonstrated the design of the valve is capable of performing its overpressure protection function under normal, upset, emergency, and faulted conditions and its designated mechanical motion(s) to fulfill its safety function to shut down the plant or mitigate the consequence of a postulated event. To ensure that valves to be installed are operable, each valve is manufactured, inspected, and production tested in accordance with quality control procedures to verify compliance with both ASME Code and operability assurance acceptance criteria.

The SRV design used at CGS successfully completed the following qualification tests:

a. Life Cycle Test

Following the prequalification production tests, each modified SRV was then subjected to life cycle qualification tests with saturated steam conditions, in accordance with GE specification 22A6595. This included approximately 300 relief (power) and safety (pressure) actuations to demonstrate and characterize each valve for acceptable BWR service. Tests parameters included:

1. Seat tightness/leakage characteristics,

2. Set pressure,

3. Opening and closing response time,

4. Blowdown,

5. Safety/relief valve lift-achieving rated flow capacity lift during each activation,

6. Safety/relief valve reclosure without chattering, disc oscillation, or sticking open, and

7. Capability to open without inlet steam when activated on demand.

Test conditions were varied according to facility capability to ensure valve operability across the design limits to which the SRV may be subjected while in service. These included temperature, pressure ramp rates, pneumatic operating pressure, solenoid voltage, inlet pressure, and the dynamically imposed backpressure.

Test results indicate essentially zero leakage for both the relief (power) and safety (pressure) modes of SRV operation. All valves demonstrated seat-tightness capability to meet the 20 lb/hr specification limit under saturated steam conditions. Each valve demonstrated safety actuation within the nameplate value plus 1% at a confidence level of 0.95. The response is also linear with ambient temperature in the negative direction; i.e., at temperatures above 135°F the actual pop pressure is lower than the nameplate value. The temperature correction value is 0.2 psi/°F for this SRV. Set pressure is independent of ramp rate variance. Response of the SRV is directly related to the effective differential pressure force acting to open the SRV; therefore, outlet static pressure at the exit can be accurately accounted for.

Opening times were as follows during the test set up:

Safety actuation time - $0.020 \leq t \leq 0.30$ sec

Relief actuation time - $0.020 \leq t \leq 0.15$ sec

Actual installation times could result in a delay time >0.10 sec due to wire lengths and other non-SRV wire losses. Closing times were:

Safety actuation - none, controlled by blowdown requirement.

Relief actuation -	time to deenergize solenoid	< 0.90 sec
	disc travel after solenoid was deenergized	< 1.50 sec

Blowdown within the required range of 2% to 11% was demonstrated. Each SRV is adjusted by full flow testing for acceptable blowdown.

Qualification test results demonstrate the SRV will open to rated capacity lift in either the relief or safety modes of operation when actuated.

The SRV reclosure was demonstrated throughout the qualification tests without sticking, chatter, or disc oscillation during the closure stroke. When inlet pressure was increased to repressurize to the set pressure, the SRV reactuated to the full open position. The modified SRV will open to its full rated capacity lift position when operated in the relief mode with the inlet pressure at zero psig, thus demonstrating its emergency operability capability.

Six SRVs were included in this life cycle qualification test program. Test anomalies corrected during this demonstration do not invalidate the adequacy of the test results obtained; the finalized modified SRV design is considered acceptable for BWR main steam applications.

b. Seismic and Moment Transfer Test

One valve specimen was subjected to operating basis earthquake (OBE) and safe shutdown earthquake (SSE) accelerations and flanged end connection moment loading with valve inlet pressurized with saturated steam. Valve operability was demonstrated during and after application of loading. Maximum test loads were 8×10^5 in. pound moment at valve inlet and 6×10^5 in. pound moment at valve outlet. Seismic accelerations of 5.0g horizontal and 4.2g vertical are the established maximum for any frequency between 5 to 200 Hz unless otherwise specified for a smaller frequency range.

c. Emergency Environmental Qualification Test

The solenoid valves and the pneumatic actuator assembly were subjected to a test sequence as follows:

1. Thermal aging equivalent to 343°F for 96 hours,

2. Radiation aging to greater than or equal to 30×10^6 rads,

3. Mechanical aging for 1000 cycles (500 per solenoid),

4. Seismic testing as described in item b. above,

5. Exposure to emergency environmental conditions of 340°F at 65 psig decreasing to 250°F at 25 psig for 4 days, and

6. Separate solenoid valve test
   340°F, 3 hrs, 45 psig
   320°F, 3 hrs, 45 psig
   250°F, 18 hrs, 25 psig
   200°F, 99 days, 20 psig.

Operability of the actuator assembly was demonstrated during and after exposure to the emergency environment.

d. Low-Pressure Water Discharge Test

Low-pressure water discharge tests as described and reported in GE Report NEDE-24988 to satisfy the requirements of II.D.1 of NUREG-0737.

Test reports/records of the above qualification tests are available for inspection.

Each SRV is production tested at the vendor's shop to ensure, by demonstration, each SRV manufactured will reliably perform its required function(s). The SRV production test consist of

a. Inlet and outlet hydrostatic tests at specified conditions to satisfy ASME Code requirements,

b. Emergency operability test to verify capability of actuator to open the SRV without inlet pressure applied to the valve,

c. Actuator system leakage test to assure pneumatic leaktightness is compatible with plant air system make-up requirements,

d. Nitrogen set pressure and leakage test to rough adjust setpoint and ensure seat quality of seating surface prior to steam tests (optional),

e. Set pressure and blowdown test under thermally stabilized and saturated steam conditions,

f. Response time tests to verify relief opening and closing times under thermally stabilized and saturated steam conditions, and

g. Steam leakage tests to verify leaktightness.

The valves are normally installed as received from the factory providing there is no apparent evidence of damage during transportation, handling, and storage. For valves stored longer than one year, it is recommended they be recertified to ensure operability. The GE equipment specification requires certification from the valve manufacturer that design and performance requirements have been met.

Testing to satisfy the ASME Code requirements is normally performed in situ. Testing can be performed locally or remotely. The local test method is conducted using a test fixture that is temporarily mounted on the SRV and then removed on completion of the test. Remote testing is accomplished using a permanently mounted pneumatic head assembly that is controlled by a remote computer. This method does not require any personnel entry into the containment for the purpose of testing.

During the startup test program, all of the main steam SRVs were tested for proper operation. These tests include a documentation review to ensure that the valves were properly installed, properly handled during transportation, storage, and installation, and were properly maintained as to cleanliness prior to performance of any tests. In addition, the air accumulator capacity, SRV nameplate set pressure, and capacity were compared with the system design documentation for compliance.

Actual mechanical tests included an operability check of the SRV discharge line vacuum breakers, actuation of the individual SRVs by each remote manual switch (main control room and/or remote shutdown panel) to demonstrate full lift, smooth stroke, and opening time characteristics, actuation of each SRV in the relief mode by stimulating its pressure switch, and a demonstration that each SRV accumulator (ADS and/or normal) has sufficient capacity to operate the SRV air actuator as required by the system design documentation. Finally, the ADS logic was fully tested for proper performance. Note that only the air actuator was exercised during many of the startup tests. This minimizes valve wear and unnecessary maintenance.

During the power ascension phase of the startup test program, each SRV was manually actuated at approximately 250 psig reactor pressure to demonstrate valve operability. At approximately 50% power each SRV was actuated a second time to measure discharge capacity and to demonstrate that no blockage in the SRV discharge line existed.

At commercial turnover the scope of SRV testing was governed by ASME B&PV Code Section XI, Article IWV and the Technical Specifications. This article specifies the rules and requirements for inservice testing to verify operational readiness of the SRVs. This code section is applied to both ADS and non-ADS valves alike. Supplemental tests of the ADS

valves each operating cycle are required by the Technical Specifications. Applying Section XI, the SRV test schedule (in part) is as follows:

Time Period (Cycle)	Number of Valves Tested	Total Tested	Elapsed Time (years)
1	6	6	1.5
2	4	10	2.5
3	4	14	3.5
4	4	18	4.5
5	4	4	1.0
6	4	8	2.0
7	4	12	3.0
8	4	16	4.0
9	2	18	5.0

Note that following the return to service of the testing SRVs, an operability demonstration will be performed in compliance with Section XI, Article IWV-3200.

This combination of the startup test program, Technical Specifications surveillance, and inservice inspection testing satisfies industry standards for SRV operability demonstrations. Energy Northwest participated in the BWR Owners' Group for TMI concerns on SRV reliability. The final test program description was submitted to the NRC by the BWR Owners' Group and is endorsed by Energy Northwest.

5.2.3 REACTOR COOLANT PRESSURE BOUNDARY MATERIALS

5.2.3.1 Material Specifications

Table 5.2-7 lists the principal pressure retaining materials and the appropriate material specifications for the RCPB components.

5.2.3.2 Compatibility with Reactor Coolant

5.2.3.2.1 Pressurized Water Reactor Chemistry of Reactor Coolant

Not applicable to BWRs.

5.2.3.2.2 Boiling Water Reactor Chemistry of Reactor Coolant

Regulatory Guide 1.56 compliance is addressed in Section 1.8.

Reactor feedwater (RFW) quality is maintained in accordance with the Licensee Controlled Specifications (LCS) and as described in Section 10.4.6.

Materials in the primary system are primarily austenitic stainless steel and Zircaloy cladding. The reactor water chemistry limits are established to provide an environment favorable to these materials. Limits are placed on conductivity and chloride concentrations. Conductivity is limited because it can be continuously and reliably measured and gives an indication of abnormal conditions and the presence of unusual materials in the coolant. Chloride limits are specified to prevent stress corrosion cracking of stainless steel. For further information, see Reference 5.2-2.

Periodically an On-Line NobleChem™ application will be performed to create a catalytic layering of the noble metal platinum to reduce the hydrogen injection rate required to achieve a low electrochemical corrosion potential (ECP). The low ECP achieves intergranular stress corrosion cracking (IGSCC) and irradiation assisted stress corrosion cracking (IASCC) protection while minimizing the effects of high dose rates attributed to regular hydrogen injection rates.

When conductivity is in its normal range, pH, chloride, and other impurities affecting conductivity will also be within their normal range. When conductivity becomes abnormal, chloride measurements are made to determine whether or not they are also out of their normal operating values. Conductivity could be high due to the presence of a neutral salt, which would not have an effect on pH or chloride. In such a case, high conductivity alone is not a cause for shutdown. In some types of water-cooled reactors, conductivities are high because of the purposeful use of additives. In BWRs, however, where no additives which significantly affect conductivity are used and where near neutral pH is maintained, conductivity provides a good and prompt measure of the quality of the reactor water. A depleted zinc oxide (DZO) skid is connected to the RFW system which maintains DZO concentration in reactor water. This has a small effect on conductivity. Significant changes in conductivity provide the operator with a warning mechanism so he can investigate and remedy the condition before reactor water limits are reached. Methods available to the operator for correcting the off-standard condition include operation of the reactor cleanup system, reducing the input of impurities, and placing the reactor in the cold shutdown condition. The major benefit of cold shutdown is to reduce the temperature-dependent corrosion rates and provide time for the cleanup system to reestablish the purity of the reactor coolant.

During normal plant operation, the dynamic oxygen equilibrium, in the reactor vessel water phase, established by steam-gas stripping and radiolytic formation (principally) rates, corresponds to a nominal value of approximately 200 ppb (0.2 ppm) of oxygen at rated operating conditions. Slight variations around this value have been observed as a result of differences in neutron flux density, core-flow, and recirculation flow rate.

A reactor water cleanup (RWCU) system is provided for removal of feedwater input impurities plus corrosion and fission products originating from primary system components. The cleanup process consists of filtration and ion exchange and serves to maintain a high level of water purity in the reactor coolant.

Additional water input to the reactor vessel originates from the control rod drive (CRD) cooling water. The CRD water is of feedwater quality. Additional filtration of the CRD water to remove insoluble corrosion products takes place within the CRD system prior to entering the drive mechanisms and reactor vessel.

An iron addition system is used to inject an iron oxalate/demineralized water solution into the suction line of the condensate booster pumps. The injection flow rate is extremely small when compared to condensate system flow rate. This iron injection system will have a negligible affect on the oxygen concentration in the RFW.

A hydrogen injection system is installed across the condensate booster pumps. This hydrogen injection system will have a negligible affect on the oxygen concentration in the RFW.

No other inputs of water or sources of oxygen are present during normal plant operation. During plant conditions other than normal operation, additional inputs and mechanisms are present as reactor coolant water could contain up to 8 ppm dissolved oxygen.

Conductivity of the primary coolant is continuously monitored with instruments connected to the reactor water recirculation loop and the RWCU system inlet. The effluent from the RWCU system is also monitored for conductivity on a continuous basis. These measurements provide reasonable surveillance of the reactor coolant.

Grab sample points are provided at the locations shown in Table 5.2-8, for special measurements such as pH, oxygen, chloride, and radiochemical content.

The relationship of chloride concentration to specific conductance measured at 25°C for chloride compounds such as sodium chloride and hydrochloric acid can be calculated (see Figure 5.2-10). Values for these compounds essentially bracket values of other common chloride salts or mixtures at the same chloride concentration. Surveillance requirements are based on these relationships.

In addition to this program, limits, monitoring, and sampling requirements are established for the condensate, condensate treatment, and feedwater system. Thus, a total plant water quality surveillance program is established providing assurance that off specification conditions will quickly be detected and corrected.

The sampling frequency established for primary coolant at normal conductivity levels is adequate for instrument checks and routine audit purposes. When specific conductance increases and higher chloride concentrations are possible or when continuous conductivity monitoring is unavailable, sampling frequency is increased according to LCS.

The primary coolant conductivity monitoring instrumentation, ranges, sensor, and indicator locations are shown in Table 5.2-8. The sampling is coordinated in a reactor sample station especially designed with constant temperature control and sample conditioning and flow control equipment.

Water Purity During a Condensate Leakage

Due to improved water quality limits, any appreciable circulating water inleakage would result in water chemistry conditions outside acceptable limits and require action(s) to return the water quality to within applicable limits for continued plant operation.

5.2.3.2.3 Compatibility of Construction Materials with Reactor Coolant

The materials of construction exposed to the reactor coolant consist of the following:

a. Solution annealed austenitic stainless steels (both wrought and cast) types 304, 304L, 316 and 316L,

b. Nickel base alloys - Inconel 600 and Inconel X750 and Inconel 82 and 182 weld metal,

c. Carbon steel and low alloy steel,

d. Some 400 series martensitic stainless steel (all tempered at a minimum of 1100°F), and

e. Cobalt, chromium, nickel, and iron based alloy hardfacing material

All of these materials of construction are generally resistant to stress corrosion in the BWR coolant. General corrosion on all materials, except carbon and low alloy steel, is negligible. Conservative corrosion allowances are provided for all exposed surfaces of carbon and low alloy steels.

Contaminants in the reactor coolant are controlled to very low limits by the reactor water quality specifications. No detrimental effects will occur on any of the materials from allowable contaminant levels in the high purity reactor coolant. Radiolytic products in the BWR have no adverse effects on the construction materials.

The recirculation system piping and normally flooded sections of the reactor vessel are coated as needed utilizing the GEH On-Line NobleChem™ application process with a microscopic layer of noble metals. This coating serves to prevent as well as mitigate IGSCC by eliminating the dissolved oxygen at the metal surface when an amount of hydrogen gas is added in a molar ratio of greater than 2 to 1 hydrogen to oxygen.

Type 304 stainless steel has been replaced with type 316L stainless steel in the recirculation inlet line safe ends. The bypass lines and the CRD hydraulic return line were eliminated and nozzles capped. The core spray lines are fabricated of carbon steel. The piping components that do not comply with the requirements of the Generic Letter 88-01 (GL 88-01), NRC Position on IGSCC BWR austenitic Stainless Steel Piping, will be subjected to the augmented inspection requirements of GL 88-01 as modified in Energy Northwest response (see Section 5.2.4 and Tables 5.2-9 and 5.2-10).

5.2.3.2.4 Compatibility of Construction Materials with External Insulation and Reactor Coolant

The materials of construction exposed to external insulation are

a. Solution annealed austenitic stainless steels (e.g., types 304, 304L, and 316), and

b. Carbon and low alloy steel.

Two types of external insulation are used. Reflective metal insulation used does not contribute to any surface contamination and has no effect on construction materials. The fibrous insulation used meets the requirements of Regulatory Guide 1.36.

DZO and iron are additives in the BWR coolant. Leakage would expose materials to high purity demineralized water, DZO, and iron. Exposure to demineralized water, DZO, and iron would cause no detrimental effects.

5.2.3.3 Fabrication and Processing of Ferritic Materials and Austenitic Stainless Steels

Fracture toughness requirements for the ferritic materials used for piping and valves (no ferritic pumps in RCPB) of the RCPB were as follows:

Safety/relief valves were exempted from fracture toughness requirements because Section III of the 1971 ASME B&PV Code did not require impact testing on valves with inlet connections of 6 in. or less nominal pipe size.

Main steam isolation valves were also exempted because the mandatory ASME Code, 1971 Edition through the Winter 1971 Addenda, required brittle fracture testing on ferritic pressure

boundary components only if required in the Design Specification. The Design Specification did not require brittle fracture testing because the system temperature is in excess of 250°F at pressure above 20% of the design pressure. Material information pertaining to the MSIVs is contained in Table 5.2-11.

Main steam piping was tested in accordance with and met the fracture toughness requirements of Paragraph NB-2300 of the 1972 Summer Addenda to ASME Code, Section III.

The ferritic pressure boundary material of the RPV was qualified by impact testing in accordance with the 1971 Edition of Section III ASME Code and Addenda to and including the Summer 1971 Addenda.

Austenitic stainless steels with a yield strength greater than 90,000 psi are not used.

The degree of compliance with Regulatory Guides 1.31, 1.34, 1.37, 1.43, 1.44, 1.50, 1.66, and 1.71 is addressed in Section 1.8.

5.2.4 INSERVICE INSPECTION AND TESTING OF THE REACTOR COOLANT PRESSURE BOUNDARY

The structural integrity of ASME Code Class 1, 2, and 3 components are maintained as required by the ISI program in accordance with 10 CFR 50.55a. With the structural integrity of any component not conforming to the above requirements, the structural integrity will be restored to within its limits or the affected component will be isolated. For Class 1 components, this isolation will be accomplished prior to increasing reactor coolant system temperature more than 50°F above the minimum temperature required by nil-ductility transition (NDT) considerations. For Class 2 components, isolation will be accomplished prior to increasing reactor coolant system temperature above 200°F.

Inservice Inspections are performed in accordance with the requirements of 10 CFR 50.55a subparagraph (g) as described in the Inservice Inspection Program Plan.

5.2.4.1 System Boundary Subject to Inspection

The system boundary subject to inspection is defined in the Inservice Inspection Program Plan. *The RPV was examined prior to service in accordance with the requirements of the 1974 Edition of the ASME B&PV Code, Section XI, including the Summer 1975 Addenda. All Class 1 piping, pumps, and valves were examined prior to service in accordance with the requirements of the 1974 Edition of the ASME B&PV Code, Section XI, with Addenda through Summer 1975, including Appendix III from the Winter 1975 Addenda.*

The design of the RPV shield wall and external inservice inspection system was completed prior to the promulgation of amendments to 10 CFR 50.55a which require the upgrading of the

utility's inservice inspection code commitment for examinations subsequent to the baseline examination. The design has allowed some additional access for inspections and coverages anticipated to be required by later codes, where possible. The result of this effort has increased the areas on the RPV available to inservice inspection (approximately 84% of the vessel weld volume is accessible) and has allowed the piping examination to be upgraded to conform to the requirements of the Summer 1975 Addenda to Section XI as far as practical.

The preservice examination was performed on Class 1 components and piping pursuant to the requirements of the 1974 Edition of the ASME B&PV Code, Section XI, including the Summer 1975 Addenda for both the RPV and associated piping, pumps, and valves. It is described in the Preservice Inspection Program Plan (Reference 5.2-6).

5.2.4.2 Arrangement of Systems and Components to Provide Accessibility

Access for the purpose of inservice inspection is defined as the design of the plant with the proper clearances for examination personnel and/or equipment to perform inservice examinations. The RCPB for the RPV is designed to provide compliance with the provisions for access as required by Subarticle IWA-1500 of the 1974 Edition of the ASME B&PV Code, Section XI, including the Summer 1975 Addenda. The RCPB for piping, pumps, and valves is designed to provide compliance with the provisions for access as required by Subarticle IWA-1500 of the 1974 Edition of the ASME B&PV Code, Section XI, with addenda through Summer 1975.

Access is provided for volumetric examination of the pressure containing welds from the external surfaces of components and piping by means of removable insulation, removable shielding, and permanent tracks for remote inspection devices in areas where personnel access is restricted. The provisions for suitable access for inservice inspection examinations minimizes the time required for these inspections and, hence, reduces the amount of radiation exposure to both plant and examination personnel. Working platforms are provided at most strategic locations in the plant which permit ready access to those areas of the RCPB which are designated as inspection points in the inservice inspection program. Temporary scaffolding will be used as required to gain access for examination.

Energy Northwest retained Southwest Research Institute to provide an independent assessment as to the suitability of plant access provisions for inservice inspection. This overview provided for identification of design modification or inspection technique development needs to ensure maximum practical compliance with code requirements.

5.2.4.2.1 Reactor Pressure Vessel

Access for inspection of the RPV is as follows:

a. Access to the exterior surface of the RPV for inservice inspection is provided by removable insulation and shield plugs. Hinged shield wall plugs around nozzles are used to gain access for nozzle inspection. A minimum annular space of 8.25 in. is provided between the vessel exterior surface and the insulation interior surface to permit the insertion of remotely operated inspection devices between the insulation and the reactor vessel. The RPV nozzle insulation is removable. This design allows sufficient clearances for the mounting of a nozzle-to-shell examination device from tracks located either at the nozzle safe-end or at the pipe area. Examinations that can be performed from these tracks include the required coverage of the nozzle-to-shell welds and depending on technique, could provide examination coverage of the nozzle inner radius section and nozzle-to-safe-end weld. Access, geometry and radiation level considerations will determine those nozzles scheduled for manual examination.

b. The vessel flange area and vessel closure head can be examined during refueling outages using manual ultrasonic techniques. With the closure head removed, access is afforded to the upper interior clad surface of the vessel by removal of a steam dryer and steam separator assembly. Removal of these components also enables the examination of remaining internal components by remote visual techniques. The volumetric examination of the vessel-to-flange weld and closure head-to-flange weld can be performed by applying the search units directly to the seal surface areas. The vessel-to-flange weld is also examined from vessel shell surface.

c. The closure head is dry stored during refueling which facilitates direct manual examination. Removable insulation allows examination of the head welds from the outside surface. Reactor vessel nuts and washers are removed to dry storage for examination during refueling.

Selected studs are examined during refueling in accordance with the Inservice Inspection Program Plan.

d. Openings in the RPV support skirt are provided to permit access to the RPV bottom head for purposes of inservice examination. The examinations performed include volumetric examinations of circumferential welds, portions of the meridional welds, portions of the dollar plate longitudinal welds, and visual examination of accessible penetration welds.

5.2.4.2.2 Piping, Pumps, and Valves

The physical arrangement of piping, pumps, and valves is designed to allow personnel access to welds requiring inservice inspection. Modifications to the initial plant design have been incorporated where practicable to provide inspection access on Class 1 piping systems. Removable insulation is provided on those piping systems requiring inspection. In addition, the placement of pipe hangers and supports with respect to those welds requiring inspection have been reviewed and modified where necessary to reduce the amount of plant support required in these areas during inspection. Working platforms are provided to facilitate servicing most of the pumps and valves. Temporary platforms, scaffolding, and ladders will be provided to gain additional access for piping and some pump and valve examinations. An effort has been made to minimize the number of fitting-to-fitting welds within the inspection boundary. Welds requiring inspection are located to permit ultrasonic examinations from at least one side, but where component geometries permit, access from both sides of the weld is provided. The surface of welds within the inspection boundary are prepared to permit effective ultrasonic examination.

5.2.4.3 Examination Techniques and Procedures

Examination techniques and procedures for the preservice examination, including any special technique and procedure, met the requirements of Table IWB-2600 of the 1974 Edition of the ASME B&PV Code, Section XI, including the Summer 1975 Addenda for both the RPV and the associated piping, pump, and valve examinations. Examination techniques and procedures for inservice inspections are in accordance with the Inservice Inspection Program Plan. *During plant design, an effort was made to upgrade the requirement for calibration standards. Where upgrading was not feasible, material of the same P series with similar acoustic characteristics were used.*

5.2.4.3.1 Equipment for Inservice Inspection

Access for inservice inspection of the RPV seam welds is accomplished through openings in the sacrificial shield. These openings are provided at each nozzle location. Permanently installed tracks between the vessel surface and the insulation can be used for mounting remotely operated devices. Access is also provided for devices that do not require use of these tracks.

Remote ultrasonic scanning equipment for examination of the nozzle-to-vessel welds will be supported and guided from tracks temporarily mounted on the pipe connected to the nozzle. The examination equipment will provide radial and circumferential motion to the ultrasonic transducer while rotating about the nozzle. Installation of the equipment will be accomplished through the access openings in the sacrificial shield which are provided at each nozzle location.

5.2.4.3.2 Coordination of Inspection Equipment With Access Provisions

Access to areas of the plant requiring inservice inspection is provided to allow use of standard equipment wherever practicable. Design in general provides for free space envelopes both radially and axially from welds to be examined so standard manual examination equipment may be utilized. Any special equipment or techniques used will achieve the sensitivities required by the codes.

5.2.4.3.3 Manual Examination

In areas where manual ultrasonic examination is performed, all reportable indications are recorded consistent with current inservice inspection codes in effect. Radiographic techniques may be used where ultrasonic techniques are not practical. In areas where manual surface or direct visual examinations are performed, all recordable indications will be in accordance with the Inservice Inspection Program Plan.

5.2.4.4 Inspection Intervals

Inspection intervals are defined in the Inservice Inspection Program Plan.

5.2.4.5 Examination Categories and Requirements

Examination categories and requirements for the preservice inspection are defined in the Preservice Inspection Program Plan and closely follow the categories and requirements specified in Tables IWB-2500 and IWB-2600 of the 1974 Edition with Addenda through Summer 1975 of the ASME B&PV Code, Section XI, for the RPV and the associated piping, pumps, and valves.

Examination categories and requirements for inservice inspections are in accordance with the requirements of ASME Section XI and are contained in the Inservice Inspection Program Plan.

5.2.4.6 Evaluation of Examination Results

Evaluation of results for the RPV, pump, and valve baseline examinations were conducted in accordance with Article IWB-3000 of the 1974 Edition of the ASME B&PV Code, Section XI, including the Summer 1975 Addenda. Evaluation of examination results for piping baseline examinations were conducted in accordance with Article IWB-3000 of the 1974 Edition of the ASME B&PV Code, Section IX, with Addenda through Winter 1975. Energy Northwest recognized that Section XI had been promulgated as an effective code by 10 CFR 50.55a, for the baseline examinations, only through the Summer 1975 Addenda. However, Energy Northwest also recognized that even though the code through Summer 1975 Addenda included evaluation criteria which could be interpreted to apply to piping (Category B-J) welds, the evaluation criteria found in the Winter 1975 Addenda clearly provides evaluation criteria which

are applicable to these welds. Energy Northwest was unaware that the NRC staff was opposed to these evaluation criteria and anticipates that the criteria which will appear in the future codes will be consistent therewith. Evaluations are performed in accordance with the Inservice Inspection Program Plan.

5.2.4.7 System Leakage and Hydrostatic Pressure Tests

The requirement for baseline hydrostatic test for the RPV was satisfied by the hydrostatic test performed in accordance with the requirements of ASME Section III. Similarly, the requirements for the baseline piping system leakage and hydrostatic tests were satisfied by reference to the Section III hydrostatic test report as permitted by ASME Section XI, IWA-5210(b). Subsequent hydrostatic and system leak tests are conducted to the code in effect in accordance with the Inservice Inspection Program Plan.

5.2.4.8 Inservice Inspection Commitment

All quality Group A components were examined once prior to startup in accordance with the above requirements. This preoperational examination served to satisfy the requirements of IWB-2100 of the 1974 Edition of the ASME B&PV Code, Section XI, including the Summer 1975 Addenda for the RPV and associated piping, pumps, and valves. Inservice inspection of Columbia Generating Station is performed in accordance with the Inservice Inspection Program Plan.

5.2.4.9 Augmented Inservice Inspection to Protect Against Postulated Piping Failures

An augmented Inservice Inspection Program Plan has been implemented for Columbia Generating Station, on high energy* Class 1 piping systems which penetrate containment for which the effects of postulated pipe breaks would be unacceptable. This program is described in the Inservice Inspection Program Plan.

* High-energy lines include those systems that, during normal plant conditions, are either in operation or maintained pressurized and where either the maximum operating pressure exceeds 275 psig or maximum operating temperature exceeds 200°F. If, for a particular line, the above pressure and temperature limits are not exceeded more than 2% of the time that the system is in operation, then that line is considered moderate energy and is exempt from the requirement for augmented inservice inspection.

5.2.4.10 Augmented Inservice Inspection of Reactor Pressure Vessel Feedwater Nozzles

5.2.4.10.1 Preservice Examination

Energy Northwest performed a preservice inspection ultrasonic examination of the RFW nozzle inner radii, bore, and safe end regions as described in the Preservice Inspection Program Plan.

In addition, a preservice liquid penetrant examination was performed on the accessible areas of all RFW nozzle inner radius surfaces.

5.2.4.10.2 Inservice Examination

Inservice examinations of RFW nozzles are performed in accordance with the Inservice Inspection Program Plan.

5.2.4.11 Augmented Inservice Inspection for Intergranular Stress Corrosion Cracking

Energy Northwest performed an ultrasonic examination of all Code Class 1 piping which is considered susceptible to IGSCC. The results are reported in the Preservice Inspection Summary Report (References 5.2-9 and 5.2-10).

GL 88-01 weld categories and augmented inspection requirements are described in the Inservice Inspection Program Plan.

5.2.4.12 ASME Section XI Repairs/Replacements

The repair or modification of N-stamped components will be performed in accordance with the Edition and Addenda of ASME Section XI defined in the Inservice Inspection Program Plan and in accordance with ASME Section III (Code Edition and Addenda to which the component was fabricated).

Deviations to the above referenced code edition and addenda as allowed by code will be reviewed by Energy Northwest and authorized on a case-by-case basis.

5.2.5 DETECTION OF LEAKAGE THROUGH REACTOR COOLANT PRESSURE BOUNDARY

5.2.5.1 Leakage Detection Methods

The nuclear boiler leak detection system consists of temperature, pressure, and flow sensors with associated instrumentation and alarms. This system detects, annunciates, and isolates (in certain cases) leakages in the following systems:

a. Main steam lines,
b. RWCU system,
c. RHR system,
d. Reactor core isolation cooling (RCIC) system,
e. Feedwater system,
f. HPCS,
g. LPCS, and
h. Coolant system within the primary containment.

Isolation and/or alarm of affected systems and the detection methods used are summarized in Table 5.2-12.

Small leaks (5 gpm and less) are detected by temperature and pressure changes, drain sump pump activities, floor drain flow monitoring, and fission product monitoring. Large leaks are also detected by changes in reactor water level and changes in flow rates in process lines.

The 5-gpm leakage rate is the limit on unidentified leakage. The leak detection system sensitivity and response is discussed in Section 7.6.2.4.

Compliance with Regulatory Guide 1.45 is described in Section 1.8.

Table 5.2-12 summarizes the actions taken by each leakage detection function. The table shows that those systems which detect gross leakage initiate immediate automatic isolation. The systems which are capable of detecting small leaks initiate an alarm in the control room. The operator can manually isolate the violated system or take other appropriate action.

5.2.5.1.1 Detection of Abnormal Leakage Within the Primary Containment

Leaks within the drywell are detected by monitoring for abnormally high-pressure and temperature within the drywell, high fillup rates of equipment and floor drain sumps, excessive temperature difference between the inlet and outlet cooling water for the drywell coolers, a decrease in the reactor vessel water level, and high levels of fission products in the drywell atmosphere. Temperatures within the drywell are monitored at various elevations. Also the temperature of the inlet and exit air to the atmosphere is monitored. Excessive temperatures in

the drywell, increased drywell drain sump flow rate, and drywell high-pressure are annunciated by alarms in the control room. Drywell high pressure and low reactor vessel water level will cause automatic primary containment isolation. In addition, low reactor vessel water level will isolate the main steam lines. The systems within the drywell share a common area; therefore, their leakage detection systems are common. Each of the leakage detection systems inside the drywell is designed with a capability of detecting leakage rates less than those established by the Technical Specifications.

5.2.5.1.2 Detection of Abnormal Leakage Outside the Primary Containment

Outside the drywell, the piping within each system monitored for leakage is in compartments or rooms, separate from other systems where feasible, so that leakage may be detected by area temperature indications. Each leakage detection system discussed in the following paragraphs is designed to detect leak rates that are less than those established by the Technical Specifications. The method used to monitor for leakage for each RCPB component is described in Table 5.2-12.

a. Ambient and differential room ventilation temperature

A differential temperature sensing system is installed in each room containing equipment that is part of the RCPB. These rooms are the RCIC, RHR, and the RWCU systems equipment rooms and main steam line tunnel. Temperature sensors are placed in the inlet and outlet ventilation ducts or across room boundaries. Other sensors are installed in the equipment areas to monitor ambient temperature. A differential temperature monitor reads each set of sensors and/or ambient temperature and initiates an alarm and isolation when the temperature reaches a preset value. Annunciator and remote readouts from temperature sensors are indicated in the control room.

Spurious isolations of systems due to a relatively sharp drop in outside ambient temperature is highly unlikely. For example, the normal approximate operating differential temperature for the RHR and RCIC pump rooms is 26°F and 32°F respectively. The temperature elements are located at the face of the supply and return ductwork in each pump room. The setpoint differential for isolation is 50°F and 55°F for RCIC and RHR to allow for heat released from a predetermined steam leak. Analysis has shown that it would take a 30°F/hr ambient (outside) temperature decrease for about 2 hr to cause isolation. This magnitude of temperature drop is not supported historically because meteorological data for Hanford has not recorded changes of this magnitude.

b. Reactor building sump flow measurement

Instrumentation monitors and indicates the amount of leakage into the reactor building floor drainage system. The normal leakage collected in the system consists of leakage from the RWCU and CRD systems and from other miscellaneous vents and drains.

c. Visual and audible inspection

Accessible areas are inspected periodically and the temperature and flow indicators discussed above are monitored regularly as required by the Technical Specifications. Any instrument indication of abnormal leakage will be investigated.

d. Differential flow measurement (cleanup system only)

Because of the arrangement of the RWCU systems, differential flow measurement provides an accurate leakage detection method. The flow from the reactor vessel is compared with the flow back to the vessel. An alarm in the control room and an isolation signal are initiated when higher flow out of the reactor vessel indicates that a leak may exist.

5.2.5.2 Leak Detection Devices

a. Drywell floor drain sump measurement

The normal design leakage collected in the floor drain sump consists of leakage from the CRDs, valve flange leakage, floor drains, closed cooling water system drywell cooling unit drains, and potential valve stem leaks. The floor drain sump collects unidentified leakage. Design details are given in Section 9.3.3.

b. Drywell equipment drain sump

The equipment drain sump collects only identified leakage. This sump receives condensate drainage from pump seal leakoff and the reactor vessel head flange vent drain. Collection in excess of background leakage would indicate reactor coolant leakage. Design details are given in Section 9.3.3.

c. Drywell air sampling

The primary containment radiation monitoring system is used to supplement the temperature, pressure, and flow variation method described previously to detect

leaks in the nuclear system process barrier. This system is described in Sections 11.5 and 7.6.

Radiation monitors are useful as leak detection devices because of their sensitivity and rapid response to leaks. After several weeks of full power operation, a set level of background radiation is established. Any sudden or unexplained increase in background radiation indicates a possible primary coolant leak within the primary containment. If an increase is noted, a comparison with other leak detection devices having a relationship to each other is made, particularly the equipment and floor drain flow rate monitors, and the reactor building sump pumps activation on high sump level. Using the flow rate monitors as a reference, the comparisons provide independent indications of a leak within the primary containment. This provides diversity in leak detection.

d. Reactor vessel head closure

The reactor vessel head closure is provided with double seals with a leak off connection between seals that is piped to the equipment drain sump. Leakage through the first seal is annunciated in the control room. When pressure between the seals increases, an alarm in the control room is actuated. The second seal then operates to contain the vessel pressure.

e. Reactor water recirculation pump seal

Reactor water recirculation pump seal leaks are detected by monitoring the drain line. Leakage, indicated by high flow rate, alarms in the control room. Leakage is piped to the equipment drain tank.

f. Safety/relief valves

Tail pipe temperature sensors connected to a multipoint recorder are provided to detect SRV leakage during reactor operation. Safety/relief valve temperature elements are mounted, using a thermowell, in the SRV discharge piping several feet from the valve body. Temperature rise above ambient is recorded in the main control room.

5.2.5.3 Indication in the Control Room

Details of the leakage detection system indications are included in Section 7.6.1.3.

5.2.5.4 Limits for Reactor Coolant Leakage

5.2.5.4.1 Total Leakage Rate

The total leakage rate consists of all leakage, identified and unidentified, that flows to the drywell floor drain and equipment drain sumps. The total leakage rate limit is established so that, in the absence of normal ac power with loss of feedwater supply, make-up capabilities are provided by the RCIC system.

The equipment sump and the floor drain sump collect all leakage. The equipment sump is drained by one 50-gpm pump and the floor drain sump is drained by two 50-gpm pumps. The total leakage rate limit from inside containment is established at 25 gpm, which includes no more than 5 gpm unidentified leakage. The total leakage rate limit is low enough to prevent overflow of the drywell sumps.

5.2.5.4.2 Normally Expected Leakage Rate

The pump packing glands and other seals in systems that are part of the RCPB and from which normal design leakage is expected, are provided with drains or auxiliary sealing systems. Nuclear system pumps inside the drywell are equipped with double seals. Leakage from the primary recirculation pump seals is piped to the equipment drain sump. Leakage in the discharge lines from the main steam SRVs is monitored by temperature sensors that transmit a signal to the control room. Any temperature increase above the drywell ambient temperature detected by these sensors indicates valve leakage.

Thus, the leakage rates from pumps and the reactor vessel head seal are measurable during plant operation. These leakage rates, plus any other leakage rates measured while the drywell is open, are defined as identified leakage rates.

The identified leakage is measured continuously and the leakage rate will be calculated and recorded on a frequency of at least once per 12 hr in accordance with the Technical Specifications. The procedures describing how the identified leakage rate is determined include provisions for showing the identified leakage rate has not exceeded the maximum allowable value of 25 gpm, including no more than 5 gpm unidentified leakage.

Each equipment leak-off connection has been provided with a temperature element which will identify to the operator that a higher than normal temperature exists at that particular location.

5.2.5.5 Unidentified Leakage Inside the Drywell

5.2.5.5.1 Unidentified Leakage Rate

The unidentified leakage rate is the portion of the total leakage rate received in the drywell sumps that is not identified as previously described. A threat of significant compromise to the nuclear system process barrier exists if the barrier contains a crack that is large enough to propagate rapidly (critical crack length). The unidentified leakage rate limit must be low because of the possibility that most of the unidentified leakage rate might be emitted from a single crack in the nuclear system process barrier.

An allowance for leakage that does not compromise barrier integrity and is not identifiable is made for normal plant operation.

The unidentified leakage rate limit is established at the 5-gpm rate to allow time for corrective action before the process barrier could be significantly compromised.

The following indications are available to the control room operator for evaluating and detecting unidentified leakage:

Drywell pressure recorders,
Drywell temperature recorders,
Drywell floor drain total flow recorder,
Reactor building floor drain sump fillup rate timer,
Reactor building floor drain sump pump out rate timer,
Drywell cooler cooling water differential temperature recorder,
Reactor vessel water level, and
Drywell atmosphere radiation monitors.

While the indications listed above have no definitive correlation between their engineering units, they provide an early warning of a potential leak to the operator. The actual unidentified leak rate is determined by observing the drywell floor drain system flow rate recorders provided in the control room. Since the monitoring is not computerized, a computer failure would not affect indications.

5.2.5.5.2 Length of Through-Wall Flaw

Experiments conducted by GE and Battelle Memorial Institute (BMI) permit an analysis of critical crack size and crack opening displacement (References 5.2-4 and 5.2-5). This analysis relates to axially oriented through-wall cracks and provides a realistic estimate of the leak rate to be expected from a crack of critical size. In every case, the leak rate from a crack of critical size is significantly greater than the 5-gpm criterion.

If either the total or unidentified leak rate limits are exceeded, an orderly shutdown would be initiated and the reactor would be placed in a cold shutdown condition in accordance with the Technical Specifications.

5.2.5.5.3 Criteria to Evaluate the Adequacy and Margin of the Leak Detection System

For process lines that are normally open, there are at least two different methods of detecting abnormal leakage from each system within the nuclear system process barrier located in the drywell, reactor building, and auxiliary building as shown in Table 5.2-12. The instrumentation is designed so it can be set to provide alarms at established leakage rate limits and isolate the affected system, if necessary. The alarm points are determined analytically or based on measurements of appropriate parameters made during startup and preoperational tests. Some alarm points require hot operation data for their determination. Preoperational testing verified proper operation of the instrumentation for the alarm point used.

The unidentified leakage rate limit is based with an adequate margin for contingencies on the crack size large enough to propagate rapidly. The established limit is sufficiently low so that, even if the entire unidentified leakage rate were coming from a single crack in the nuclear system process barrier, corrective action could be taken before the integrity of the barrier would be threatened with significant compromise.

The leak detection system sensitivity and response time is discussed in Section 7.6.2.4 such that an unidentified leakage rate increase of 1 gpm in less than 1 hr will be detected.

5.2.5.6 Safety Interfaces

The balance of plant/GE nuclear steam supply system safety interfaces for the leak detection system are the signals from the monitored balance-of-plant equipment and systems that are part of the nuclear system process barrier and associated wiring and cable lying outside the nuclear steam supply equipment. These balance-of-plant systems and equipment include the main steam line tunnel, the SRVs, and the turbine building sumps.

5.2.5.7 Testing and Calibration

Provisions for testing and calibration of the leak detection system are described in Section 7.6.

5.2.6 REFERENCES

5.2-1 "Qualification of the One–Dimensional Core Transient Model (ODYN) for BWR's," NEDO-24154–A, Vol. 1 and 2, General Electric, August 1986.

5.2-2 J. M. Skarpelos and J. W. Bagg, "Chloride Control in BWR Coolants," June 1973, NEDO-10899.

5.2-3 W. L. Williams, Corrosion, Vol. 13, 1957, p. 539t.

5.2-4 GEAP-5620, "Failure Behavior in ASTM A106B Pipes Containing Axial Through-Wall Flows," by M. B. Reynolds, April 1968.

5.2-5 "Investigation and Evaluation of Cracking in Austenitic Stainless Steel Piping of Boiling Water Reactor Plants," NUREG-76/067, NRC/PCSG, dated October 1975.

5.2-6 Washington Public Power Supply System, 1985, "WNP-2 Preservice Inspection Program Plan," Washington Public Power Supply System, Richland, Washington.

5.2-7 NEDE-32906P Supplement 3-A, "Migration to TRACG04/PANAC11 fromTRACG02/PANAC10 for TRACG AOO and ATWS Overpressure Transients," April 2010.

5.2-8 "Columbia Generating Station TRACG Implementation for Reload Licensing Transient Analysis," (T1309), 001N9271-R1, Revision 1, January 2015.

5.2-9 Letter GO2-85-110 from G. C. Sorenson, Supply System, to A. Schwencer, NRC, Subject: Nuclear Project No. 2, CPPR-93 Preservice Inspection Program Plan, Amendment No. 4, Summary Report Supplement No. 1, NIS-1 Code Data Report, dated February 28, 1985.

5.2-10 Letter GO2-83-401 from G. D. Bouchay, Supply System, to A. Schwencer, NRC, Subject: Nuclear Project No. 2, CPPR-93, Preservice Inspection Program Plan, Volume No. 4, "Preservice Inspection Summary Report", dated May 3, 1983.

5.2-11 "Supplemental Reload Licensing Report for Columbia" (most recent version referenced in COLR).

Table 5.2-1

Exceptions to Conformance to 10 CFR 50.55a
Reactor Coolant Pressure Boundary Components

Component Description	Quantity	Plant Identification System Number	Purchase Order Date	Code Applied ASME Section III	Code Required by 10 CFR 50.55(a)	Component Status
Main steam safety relief valves	18	MS-RV-1 A-D MS-RV-2 A-D MS-RV-3 A-D MS-RV-4 A-D MS-RV-5 B-C (B22-F013 A-V)	April 1971	1971 Edition	1971 Summer Addenda	FS[a]
Recirc pumps	2	RRC-P-1A (B35-C001)	April 1971	1971 Edition	1971 Summer Addenda	FS
Recirc gate valves	4	RRC-V-23/ RRC-V-67 (B35-F023/F067)	June 1971	1971 Edition	1971 Summer Addenda	FS
Recirc flow control valve	2	RRC-V-60 (B35-F060)	June 1971	1971 Edition	1971 Summer Addenda	FS
Recirc piping	1 lot	B35-G001	October 1971	1971 Summer Addenda	1971 Winter Addenda	FS

[a] FS = Fabricated and Shipped

Table 5.2-2

Reactor Coolant Pressure Boundary
Component Code Case Interpretations

	Number	Title	Remarks
1.	1332 - Revision 6	Requirements for steel forgings	Regulatory Guide 1.85, Revision 6
2.	1401 - Revision 0	Welding repairs to cladding of Class I, Section III, components after heat treating	
3.	1420 - Revision 0	5b-167 Ni-Cr-Fe alloy pipe or tube	
4.	1441 - Revision 1	Waiving of 3 S_m requirement for Section III construction	
5.	1141 - Revision 1	Foreign produced steel	Regulatory Guide 1.85, Revision 5
6.	1361 - Revision 2	Socket welds, Section III	Regulatory Guide 1.84, Revision 9
7.	1525	Pipe descaled by means other than pickling, Section III	
8.	1535 - Revision 2	Hydrostatic test of Class 1 nuclear valves, Section III	Regulatory Guide 1.84, Revision 9
9.	1567	Testing lots of carbon and low alloy steel covered electrodes, Section III	Regulatory Guide 1.85, Revision 6
10.	1621 - Revision 1	Internal and external valve items, Section III, Class 1	Regulatory Guide 1.84, Revision 12 (for 1621-2)
11.	1588	Electro-etching of Section III code symbols	Regulatory Guide 1.84, Revision 9
12.	1820	Alternative ultrasonic examination technique Section III, Division 1	Regulatory Guide 1.85, Revision 11
13.	N181	Steel castings refined by the argon oxygen decarbonization process Section 3, Division 1 construction	
14.	1711	Pressure relief valve, design rules, Section III, Division 1, Class 1, 2, 3	

Table 5.2-3

Nuclear System Safety/Relief Setpoints

Number of Valves	Spring Set Pressure (psig)	ASME Rate Capacity at 103% Spring Set Pressure (lb/hr each)	Pressure Setpoint for the Power Actuated Mode (psig)
2	1165	876,500	1091
4	1175	883,950	1101
4	1185	891,380	1111
4	1195	898,800	1121
4	1205	906,250	1131

Note: Seven of the safety/relief valves serve in the automatic depressurization function.

Table 5.2-4

Systems Which May Initiate During
Safety Valve Capacity Overpressure Event

System	Initiating/Trip Signal(s)[a]
Reactor Protection System	Reactor trips "OFF" on high flux
RCIC	"ON" when reactor water level ≤L2
	"OFF" when reactor water level ≥L8
HPCS	"ON" when reactor water level ≤L2
	"OFF" when reactor water level ≥L8
Recirculation system	"OFF" when reactor water level ≤L2
	"OFF" when reactor pressure ≤1143 psig
RWCU	"OFF" when reactor water level ≤L2

[a] Note: Vessel level trip settings L2 and L8 shown in Figure 5.3-3.

Table 5.2-5

Sequence of Events for Figure 5.2-2

Time-Sec	Event
0	Initiate closure of all main steam isolation valves (MSIV).
0.45	MSIVs reached 85% open and initiated reactor scram. However, hypothetical failure of this position scram was assumed in this analysis.
2.0	Neutron flux reached the high APRM flux scram setpoint and initiate reactor scram.
2.9	Steam line pressure reached the group safety relief valve pressure setpoint (spring-action mode and safety relief valves started to open).
3.0	MSIVs completely closed.
3.5	All safety relief valves opened.
3.9	Vessel bottom pressure reached its peak value.

Table 5.2-6

Design Temperature, Pressure and Maximum Test Pressure for RCPB Components

Component	Design Temperature (°F)	Design Pressure (psig)	Maximum Test Pressure (psig)
Reactor vessel	575	1250	1563
Recirculation system			
Pump discharge piping, through valves	575	1650	(a)
Pump discharge piping, beyond valves	575	1550	(a)
Pump suction piping	575	1250	(a)
Pump and discharge valves	575	1650	(b)
Suction valves	575	1250	(b)
Flow control valve	575	1675	(a)
Vessel drain line	575	1275	(a)
Main steam system			
Main steam line	575	1250	(a)
Main steam line valves	575	1250	(b)
Residual heat removal system			
Shutdown suction			
Recirculation header to second isolation valve			
Piping	575	1250	(a)
Valves	575	1250	(b)
Pump discharge			
Reactor vessel to second isolation valve			
Piping	575	1250	(a)
Valves	575	1250	(b)

Table 5.2-6

Design Temperature, Pressure and Maximum Test Pressure for RCPB Components (Continued)

Component	Design Temperature (°F)	Design Pressure (psig)	Maximum Test Pressure (psig)
Shutdown return			
Recirculation header to second isolation valve			
Piping	575	1575	(a)
Valves	575	1575	(b)
Reactor feedwater			
Reactor vessel to manual valve (F011)			
Piping	575	1300	(a)
Valves	575	1300	(b)
Reactor core isolation cooling system			
Steam to RCIC.	575	1250	(a)
Pump turbine			
Reactor vessel to second isolation valve			
Piping	575	1250	(a)
Valves	575	1250	(b)
Pump discharge to reactor	170	1500	(a)
Reactor vessel to second isolation valve			
Piping	575	1500	(a)
Valves	575	1500	(b)
High-pressure core spray system			
Outboard containment isolation valve to and including maintenance valve inside containment[c]			
Piping	575	1250	(a)
Valves	575	1250	(b)

Table 5.2-6

Design Temperature, Pressure and Maximum Test Pressure for RCPB Components (Continued)

Component	Design Temperature (°F)	Design Pressure (psig)	Maximum Test Pressure (psig)
From maintenance valve to reactor vessel			
Piping	575	1250	(a)
Valves	575	1250	(b)
Low-pressure core spray system			
Outboard isolation valve to reactor vessel			
Piping	575	1250	(a)
Valves	575	1250	(b)
Standby liquid control			
Pump discharge to reactor vessel			
Reactor to second isolation valve[d]			
Piping	150	1400	(a)
Valves	150	1400	(b)
Reactor water cleanup system			
Pump suction			
Recirculation piping to isolation valve outside drywell			
Piping	575	1250	(a)
Valves	575	1250	(b)
Control rod drive system			
Piping to HCUs	150	1750	2187

[a] Test pressure at the bottom of the reactor vessel is nominally 1565. The piping is field tested with the reactor vessel.

[b] Test pressure is based on ASME III Table NB-3531-9 (1971 Edition through Winter 1973 Addenda).

[c] For dual design conditions, see Figure 6.3-3.1.

[d] The design temperature and pressure of the original injection piping were 575°F and 1250 psig. This portion of piping was rerouted to the HPCS injection and was tested in accordance with ASME Section XI, 1980 Edition, Winter Addenda.

Table 5.2-7

Reactor Coolant Pressure Boundary Materials

Component	Form	Material	Specification (ASTM/ASME)
Reactor vessel	Rolled plate	Low alloy steel	SA-533 grade B class 1
Heads, shells	Forgings Welds	 Low alloy steel	SA-508 class 2 SFA-5.5
Closure flange	Forged ring Welds	Low alloy steel Low alloy steel	SA-508 class 2 SFA-5.5
Nozzle safe ends	Forgings or Plates	Stainless steel	SA-182, F304 or F316 SA-336, F8 or F8 M SA-240, 304 or 316
	Welds	Stainless steel	SFA-519, TP-308L or 316L
Nozzle safe ends	Forgings Welds	Ni-Cr-Fe Ni-Cr-Fe	SB-166 or SB-167 SFA-5.14, TP ERNiCr-3 or SFA-5.11, TP ENCrFe-3
Nozzle safe ends	Forgings	Carbon steel	SA-105 grade 2, SFA-5.18 grade A, or SFA-5.17 F70
Nozzle safe ends	Forgings	Austenitic stainless steel	SA-182 grade F, 316L
Cladding	Weld overlay	Austenitic stainless steel	SFA-5.9 or SFA-5.4 TP-309 with carbon content on final surface limit to 0.09% maximum
Control rod drive housings	Pipe Forgings Welds	Austenitic stainless steel Inconel	SA-312 type 304 SFA-5.11 type ENiCrFe-3 or SFA-5.14 type ERNiCr-3

Table 5.2-7

Reactor Coolant Pressure Boundary Materials (Continued)

Component	Form	Material	Specification (ASTM/ASME)
In-core housings	Pipe Forgings Welds	Austenitic stainless steel Inconel	SA-312 type 304 SFA-5.11 type ENiCrFe-3 or SFA-5.14 type ERNiCr-3

Additional RCPB component materials and specifications to be used are specified below.

Depending on whether impact tests are required and depending on the lowest service metal temperature when impact tests are required, the following ferritic materials and specifications are used:

Pipe SA-106 grade B and C; SA-333 grade 5; SA-155 grade KCF 70

Valves SA-105 grade II-normalized; SA-350 grade LF1 or LF2 and SA-216 grade WCB, normalized; and SA-352 grade LCB

Fittings SA-105 grade II-normalized; SA-350 grade LF1 or LF2-normalized; SA-234 grade WPB-normalized; and SA-420 grade WPL1

Bolting SA-193 grade B7, SA-194 grades 7 and 2H, or SA-540 B23/24 Class 3

Welding Material Welding materials conform to the applicable SFA specifications listed in ASME B&PV Code Section IIc. Individual selection of filter metals are reviewed for conformity to the base materials being welded by the Consulting Engineers' review of welding procedures.

For those systems or portions of systems such as the reactor recirculation system, which require austenitic stainless steel, the following materials and specifications are used:

Pipe SA-376 type 304; SA-312 type 304; SA-358 type 304

Valves SA-182 grade F-304 and F-316; SA-351 grades CF-3, CF-3M, CF-8 and CF-8M

Table 5.2-7

Reactor Coolant Pressure
Boundary Materials (Continued)

Pump	SA-182 grade F-304; SA-351 grades CF-8 and CF-8M
Flanges	SA-182 grade F-316
Bolting	SA-193 grade B7; SA-194 grades 7 and 2H
Welding	SFA-5.4 (E308-15, E308L-15, E316-15); SFA-5.9 (ER-308, ER-308L, ER-316)
Fittings	SA-182 grade F304; SA-351 grade CF-8; SA-403 grade WP-304, 304W

Table 5.2-8

Water Sample Locations

Sample Origin	Sensor Location	Indicator Location	Recorder Location	Range μmho/cm	Alarm Low	Alarm High
Reactor water recirculation loop	Sample line	Sample station	Control room	0-1	0.0	1.0
Reactor water cleanup system inlet	Sample line	Sample station	Control room	0-1	0.0	1.0
Reactor water cleanup system outlets	Sample line	Sample station	Control room	0-0.3	NA	0.15

Table 5.2-9

IHSI Summary
Prior to First Refueling GL 88-01,
Category B Welds

Energy Northwest ISI Weld Number	Welds
Stainless steel to stainless steel	
24RRC(2)-A-2 thru 24RRC(2)-A-12	11
24RRC(1)-A-13 thru 24RRC(1)-A-22	10
16RRC(1)-A-1 thru 16RRC(1)-A-4	4
12RRC(1)-N2A-1, 1A	2
12RRC(1)-N2B-1, 1A	2
12RRC(1)-N2C-1, 1A	2
12RRC(1)-N2D-1, 1A	2
12RRC(1)-N2E-1, 1A	2
20RRC(6)-1 thru 20RRC(6)-7, 7A, 8	9
4RRC(8)-2A-1, 2	2
4RRC(8)-1A-1, 2	2
12RRC(7)-A-1 thru 12RRC(7)-A-6	6
12RHR(1)-A15 thru 12RHR(1)-A18	4
24RRC(2)-B-2 thru 24RRC(2)-B-10	9
16RRC(1)-B-1 thru 16RRC(1)-B-4	4
24RRC(1)-B-11 thru 24RRC(1)-B-20	10
12RRC(1)-N2F-1, 1A	2
12RRC(1)-N2G-1, 1A	2
12RRC(1)-N2H-1, 1A	2
12RRC(1)-N2J-1, 1A	2
12RRC(1)-N2K-1, 1A	2
4RRC(8)-2B-1, 2	2
4RRC(8)-1B-1, 2	2
12RRC(7)-B-1, 2, 2A thru 12RRC(7)-B-6	7
12RHR(1)-B-11 thru 12RHR(1)-B-13	3
20RHR(2)-1	1
Stainless steel to stainless steel caps	
24RRC(1)-A13/8CAP-1, A20/12CAP-1	2
24RRC(1)-B-11/CAP-1, 18/12CAP-1	2
Stainless steel to carbon steel	
20RHR(2)-2	1
12RHR(1)-A14	1
12RHR(1)-B-10	1
TOTAL	113

Table 5.2-10

IHSI Summary
During First Refueling GL 88-01,
Category B Welds

Energy Northwest ISI Weld Number	Welds
4RRC(4) A-1 thru 4RRC(4) A-11	11
4RRC(4) B-1 thru 4RRC(4) B-12	12
24RRC(2) A-10/4RRC(8)-4S	1
24RRC(2) A-10/4RRC(4)-4S	1
24RRC(1) A-13/4RRC(8)-4S	1
24RRC(1) A-13/8 Cap	1
24RRC(1) A-20/12 Cap	1
24RRC(1) A-20/12RRC(7)-4S	1
24RRC(2) B-8/4RRC(8)-4S	1
24RRC(2) B-8/4RRC(4)-4S	1
24RRC(1) B-11/8 Cap	1
24RRC(1) B-11/4RRC(8)-4S	1
24RRC(1) B-18/12 Cap	1
24RRC(1) B-18/12RRC(7)-4S	1
TOTAL	35
Type 304 Welds with Low Carbon Content	
[a]4JP (NZ) A-1 Inconel 182 buttering	1
[a]4JP (NZ) B-1 Inconel 182 buttering	1
[a]4JP (NZ) A-2	1
[a]4JP (NZ) B-2	1
TOTAL	4

[a] Confirmed by CMTR review safe end material used was type 304 with a carbon content of ≤ 0.025%.

Table 5.2-11

Main Steam Isolation Valves
Material Information

Item	Material Spec	Material Type	Minimum Design Wall Thickness
Body	SA-216	GR WCB	1.58 in.
Bonnet	SA-105	GR II	7.66 in.
Stem disc[a]	SA-105	N/A	1.56 in.
Disc piston[a]	SA-105	N/A	3.24 in.
Stem[a]	SA-564 or A-182	Tp 630 H1100 GR F6A C1 3	
Bonnet studs	SA-540	Class 4	1-5/8 in. diameter
Bonnet nuts	SA-194	GR 7	1-5/8 in. diameter

See Section 5.2.3.3 for fracture toughness response.

Piping connecting the MSIV
Outside diameter 12 in.
Nominal wall thickness = 1.103 in. plus 0.125 in.

[a] Redesign/replacement materials

Table 5.2-12

Summary of Isolation/Alarm of System Monitored and the Leak Detection Methods Used

		Variable Monitored												
FUNCTION		A	A	A	A/I	A/I	A	A/I	A/I	A/I	A/I	A/I	A	A
Source of Leakage	Location	High PC °F	PC Sump High Flow Rate	High/Dry-well Cooler Condensate Flow[a]	Equip-ment Area High T and ΔT	Low Steam Line Pressure	RB Sump or Drain High Flow Rate	PC Pressure (High)	High Flow Rate[b]	RCIC Diaphragm High Exhaust Line Pressure	RWCU ΔFlow (High)	Reactor Low Water Level	High Differential Pressure	Fission Products High[a]
Main steam line	PC	X	X	X		X[c]		X	X			X		X
	RB				X	X[c]	X		X			X		
RHR	PC	X	X	X				X				X		X
	RB				X		X		X			X		
RCIC steam	PC	X	X	X		X		X	X					X
	RB				X		X		X	X				
RCIC water	PC		X											
	RB						X							
RWCU water	PC	X	X	X				X[b]			X	X		X
	RB hot				X		X		X		X	X		
	RB cold						X		X		X	X		
Feedwater	PC	X	X	X				X						
	RB				X[d]		X							
ECCS water	PC		X										X	X
	RB						X						X	
Reactor coolant	PC	X	X	X				X				X		X
	RB													

PC - Primary containment
RB - Reactor building
RWCU - Reactor water cleanup
CCW - Closed cooling water

A - Alarm
I - Isolation

NOTE:
[a] All systems within the drywell share a common detection system.
[b] Break downstream of flow element will isolate the system.
[c] In run mode only.
[d] Alarm only (steam tunnel).

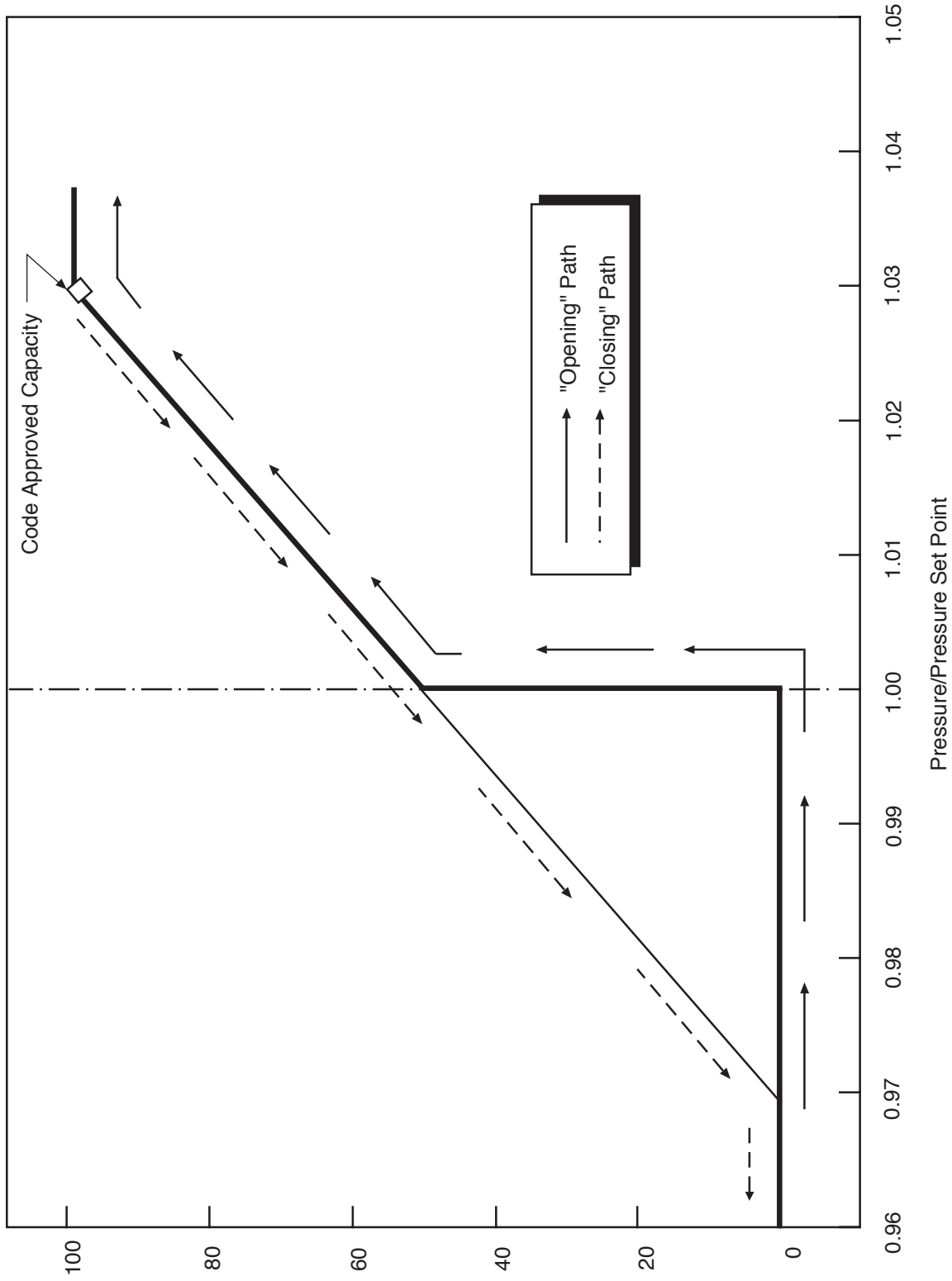

Columbia Generating Station Final Safety Analysis Report	Simulated Safety Relief Valve Spring Mode Characteristic used for Capacity Sizing Analysis		
	Draw. No. 960690.46	Rev.	Figure 5.2-1

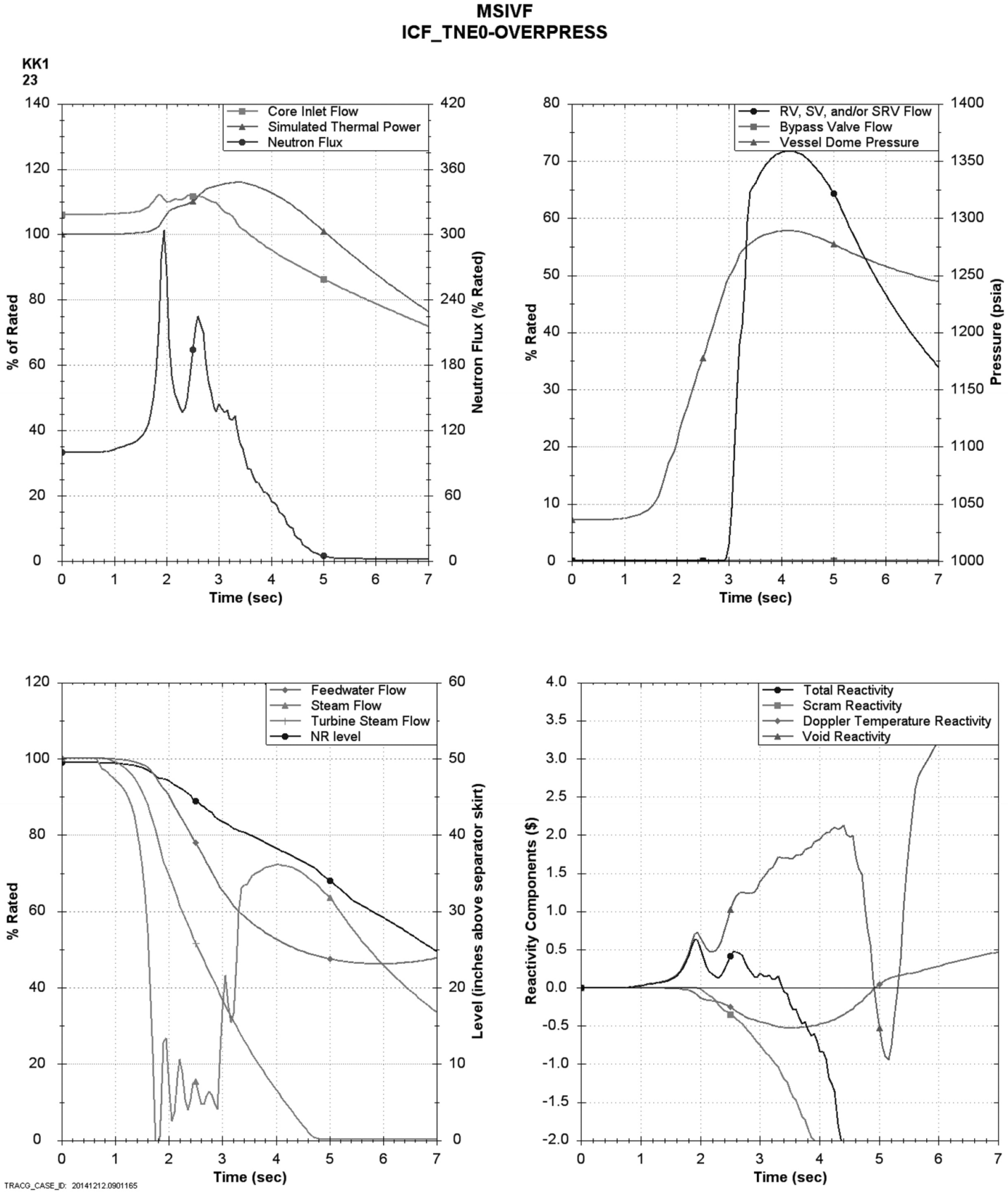
MSIVF
ICF_TNE0-OVERPRESS
KK1
23
Core Inlet Flow
Simulated Thermal Power
Neutron Flux
% of Rated
Neutron Flux (% Rated)
Time (sec)
RV, SV, and/or SRV Flow
Bypass Valve Flow
Vessel Dome Pressure
% Rated
Pressure (psia)
Time (sec)
Feedwater Flow
Steam Flow
Turbine Steam Flow
NR level
% Rated
Level (inches above separator skirt)
Time (sec)
TRACG_CASE_ID: 20141212.0901165
Total Reactivity
Scram Reactivity
Doppler Temperature Reactivity
Void Reactivity
Reactivity Components ($)
Time (sec)

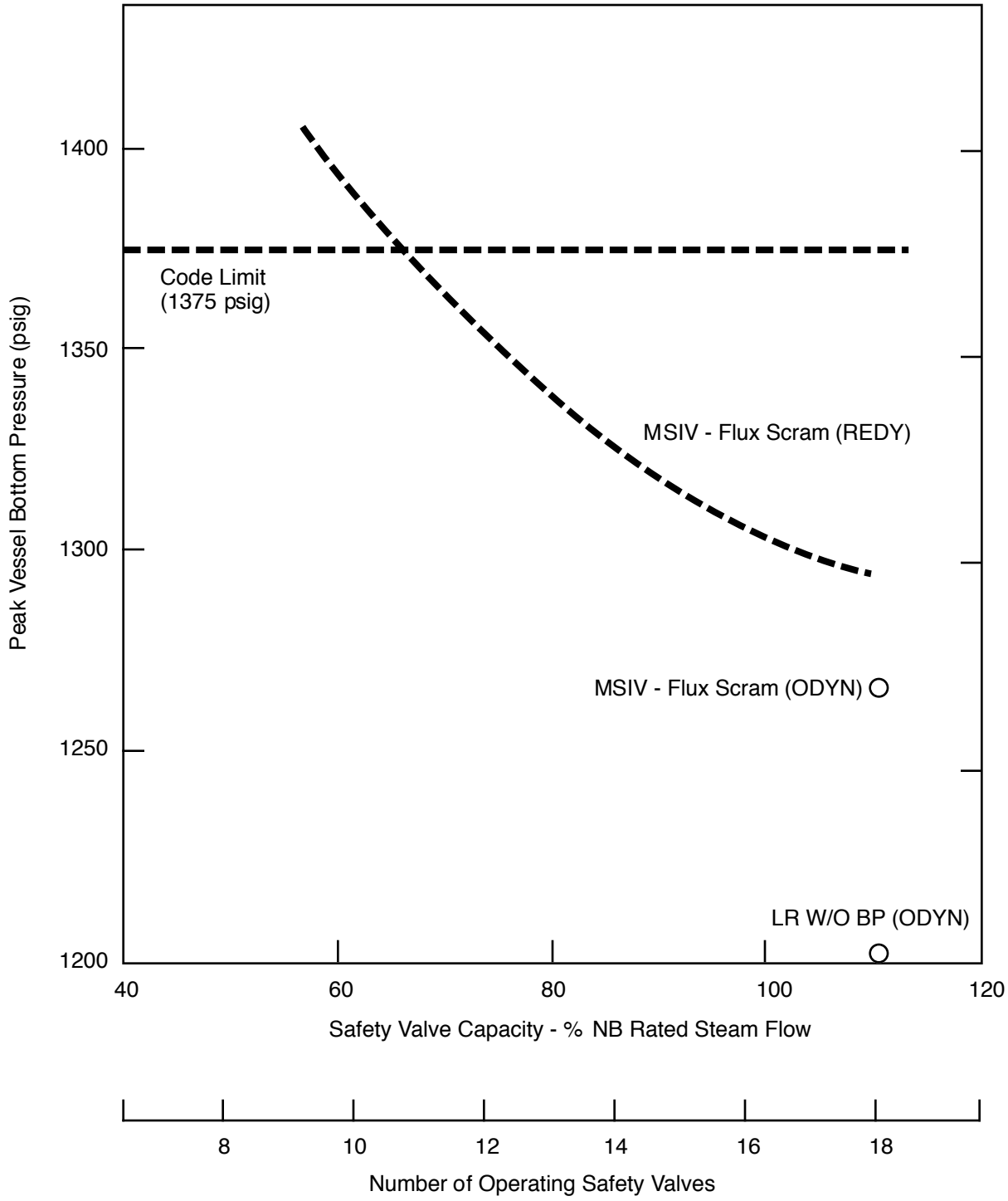

Columbia Generating Station
Final Safety Analysis Report

Peak Vessel Pressure Versus Safety Valve Capacity

Draw. No. 960690.47	Rev.	Figure 5.2-3

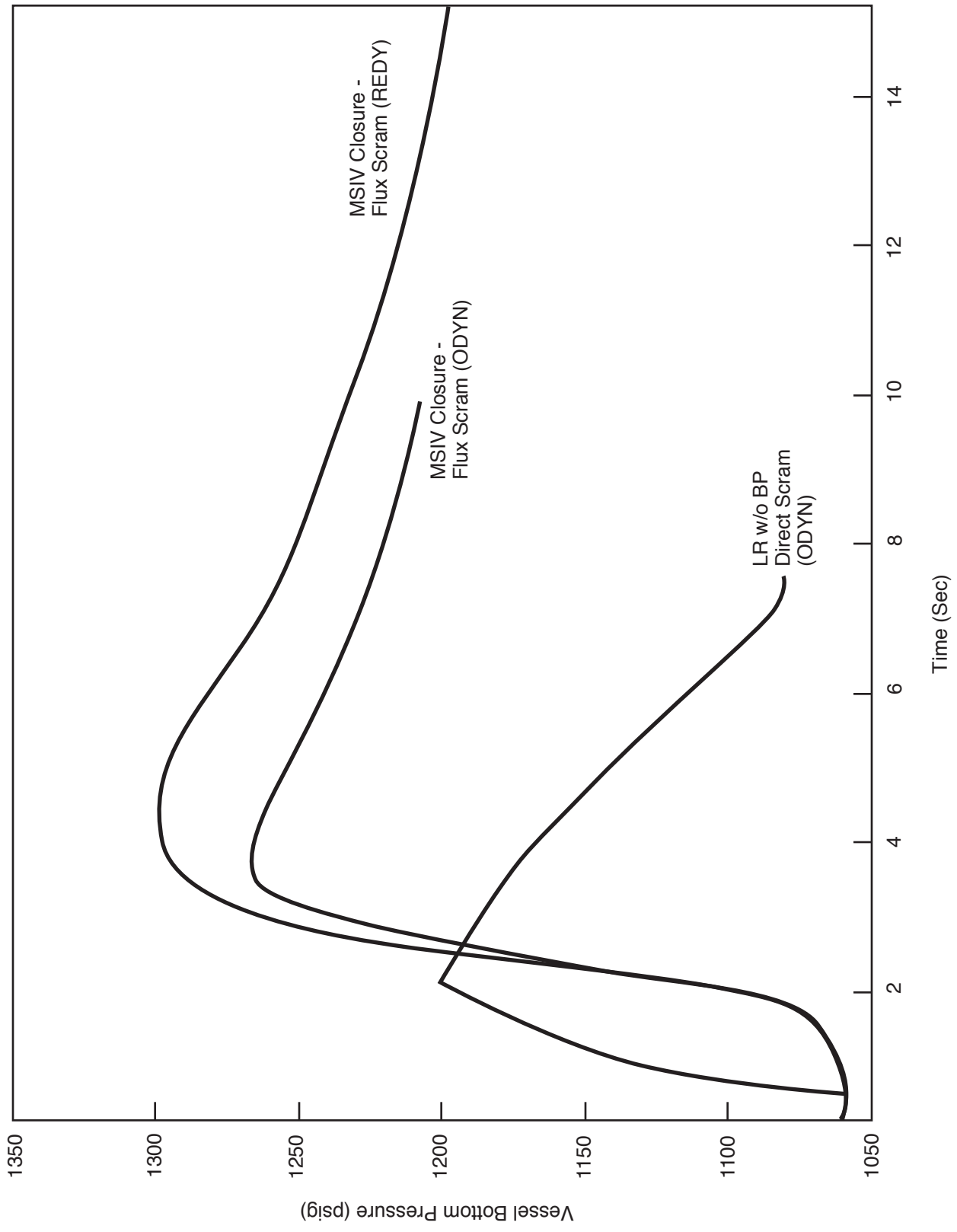

Columbia Generating Station Final Safety Analysis Report	Time Response of Pressure Vessel for Pressurization Events		
	Draw. No. 960690.48	Rev.	Figure 5.2-4

TABLE VI: ELEVATION CORRELATION CHART

REFERENCE	(COLD VESSEL) INCHES ABOVE VESSEL ZERO	DESCRIPTION OF TRIPS	INSTRUMENT(S) PROVIDING TRIP	REACTOR VESSEL LEVEL IDENTITY SEE REF. 25 OF P&ID	CONTROL ROOM WATER LEVEL INDICATION AND TRIP LEVELS SEE NOTE 3					
					SAFEGUARDS			FEEDWATER		
					FUEL ZONE	WIDE RANGE	NARROW RANGE		UPSET	SHUTDOWN
					LR-R615 LI-R610	LR/PR-R623A,B LI-R604	C34 LR-R608 C34 LI-R606A,B,C		C34-LR-R608	LI-R605
TOP OF HEAD FLANGE	898 MAX								+180"	+400"
STEAM LINE NOZZLE N3	648									
INSTRUMENT LINE NOZZLE N14	599	TRIP RCIC & CLOSE HPCS INJECTION VALVE CLOSE MAIN TURBINE STOP VALVES. TRIP FEED PUMPS.	TABLE IV REF. 2	8		+60"	+60"	+60"		
		HIGH LEVEL ALARM	REF. 2	7			+54.5"	+54.5"		
		NORMAL WATER LEVEL	REF. 2	5.6				+40.5"		
		LOW LEVEL ALARM, RUN RECIRC FLOW BACK *	REF. 2	4				+31.5"		
		SCRAM & CLOSE RHR SHUTDOWN COOLING ISOLATION VALVES. CONTRIBUTE TO AUTO DEPRESSURIZATION. RUN BACK RECIRC FLOW	TABLE IV REF. 2	3			+13"	+13"		
WATER LEVEL INSTRUMENT ZERO	527.5				0"	0"	0"	0"	0"	0"
BOTTOM OF DRYER SKIRT										
INSTRUMENT LINE NOZZLE N13	517	INITIATE RCIC & HPCS, CLOSE PRIMARY SYSTEMS ISOLATION VALVES EXCEPT RHR SHUTDOWN COOLING. MSIVs, MAIN STEAM LINE DRAIN VALVES TRIP RECIRC PUMPS	TABLE IV	2	-110"	-50"				
		INITIATE RHR & CORE SPRAY SYS CONTRIBUTE TO AUTO DEPRESSURIZATION. START STAND-BY DIESEL. CLOSE MSIVs, MAIN STEAM LINE DRAIN VALVES.	TABLE IV	1		-129" -150"				
INSTRUMENT LINE NOZZLE N12	366									
TOP OF ACTIVE FUEL	366.3									
JET PUMP INSTRUMENT NOZZLE N9	152.0				-310"					
JET PUMP DIFFUSER TAP	143.5									

* FUNCTION IS IN FEEDWATER CONTROL SYS (REF 2) FOR LOSS OF ONE FEED PUMP

TABLE I: SAFETY/RELIEF VALVE LOCATION, SUFFIX ASSIGNMENT, ASSOCIATED EQUIPMENT

SAFETY/RELIEF VALVE	F013	A	B	C	D	E	F	G	H	J	K	L	M *	N ⊛	P	R *	S *	U ⊛	V ⊛
ACCUMULATORS	A003 (ADS)												M	N	P	R	S	U	V
	A004	A	B	C	D	E	F	G	H	J	K	L	M	N	P	R	S	U	V
CHECK VALVES	F036	A	B	C	D	E	F	G	H	J	K	L	M	N	P	R	S	U	V
	F040(ADS)												M	N	P	R	S	U	V
VACUUM BREAKER	F037	A	B	C	D	E	F	G	H	J	K	L	M	N	P	R	S	U	V
PRESSURE SWITCH	N039	A	B	C	D	E	F	G	H	J	K	L	M	N	P	R	S	U	V
COMPUTER INPUTS FOR VALVE POS (REF 3) Ⓒ		C1732	C1733	C1734	C1735	C1736	C1737	C1738	C1739	C1740	C1741	C1742	C1743	C1744	C1745	C1746	C1747	C1748	C1749
TEMPERATURE ELEMENT	N004	A	B	C	D	E	F	G	H	J	K	L	M	N	P	R	S	U	V
ADS FUNCTION													YES	YES	YES	YES	YES	YES	YES

ADS - SAFETY/RELIEF VALVE FOR AUTO DEPRESSURIZATION
* - CONTROL PROVIDED IN REMOTE SHUTDOWN SYS (REF 5)
⊛ - CONTROL PROVIDED IN ALTERNATE REMOTE SHUTDOWN SYS (SEE REF 5)
⊛⊛ NS⁴ EXCEPT MSIVs, MAIN STEAM LINE DRAIN VALVES.
⊛⊛⊛ MSIVs, MAIN STEAM LINE DRAIN VALVES.

TABLE IV: WATER LEVEL INSTRUMENT CONTACT UTILIZATION

INSTRUMENT NUMBER	DIV	UPPER RANGE TRIP 2-A	UPPER RANGE TRIP 2-B	LEVEL #	LOWER RANGE TRIP 1-A	LOWER RANGE TRIP 1-B	LEVEL #	TRANS E/S MPL #
LIS-N024A	IA				RPS (NS4)		3	
LIS-N024B	IB	RCIC (I)			RPS (NS4)		3	
LIS-N024C	IIA				RPS (NS4)		3	
LIS-N024D	IIB	RCIC (II)						
LIS-N100A	I	HPCS		3				
LIS-N100B	II	HPCS		3				
LIS-N038A	I					ADS (A)	3	
LIS-N038B	II					ADS (B)	3	
LIS-N037A	I	RCIC		2	LPCS & RHR(A)	ADS (A)	1	
LIS-N037B	II	RCIC		2	RHR(B) & RHR(C)	ADS (B)	1	
LIS-N037C	I	RCIC		2	LPCS & RHR(A)	ADS (A)	1	
LIS-N037D	II	RCIC		2	RHR(B) & RHR(C)	ADS (B)	1	
LIS-N031A	III	HPCS		2				
LIS-N031B	III	HPCS		2				
LIS-N031C	III	HPCS		2				
LIS-N031D	III	HPCS		2				
MS-LS-300A	1A	⊛⊛		2				C72A-K613A
MS-LS-300B	1B	⊛⊛		2				C72A-K613B
MS-LS-300C	IIA	⊛⊛		2				C72A-K613C
MS-LS-300D	IIB	⊛⊛		2				C72A-K613D
LIS-N036A		RECIRC (A)		2				
LIS-N036B		RECIRC (B)		2				
LIS-N036C		RECIRC (A)		2				
LIS-N036D		RECIRC (B)		2				
								E12 K603A
MS-LIS-200A	1A	⊛⊛⊛		1				C72A-K613A
MS-LIS-200B	1B	⊛⊛⊛		1				C72A-K613B
MS-LIS-200C	IIA	⊛⊛⊛		1				C72A-K613C
MS-LIS-200D	IIB	⊛⊛⊛		1				C72A-K613D

TABLE V: PRESSURE INSTRUMENT CONTACT UTILIZATION

INSTRUMENT NUMBER	DIV	TRIP	TRANS E/S MPL #
PS N020A	IA	RPS	
PS N020B	IB	RPS	
PS N020C	IIA	RPS	
PS N020D	IIB	RPS	
PS N023A	IA	RPS	
PS N023B	IB	RPS	
PS N023C	IIA	RPS	
PS N023D	IIB	RPS	
PS N039 *	I	RELIEF VALVE	
PS N045A		RECIRC (A)	
PS N045B		RECIRC (B)	
PS N045C		RECIRC (A)	
PS N045D		RECIRC (B)	
PS N047A,C	III	HPCS	
PS N047B,D	III	HPCS	
PS N048A,C	I	LPCS RHR(A)	
PS N048B,D	II	RHR(B), RHR(C)	
PT N051A	IA		K613A
PT N051B	IB		K613B
PS N015A	IA	NS4	
PS N015B	IB	NS4	
PS N015C	IIA	NS4	
PS N015D	IIB	NS4	
VS N056A	IA	NS4	
VS N056B	IB	NS4	
VS N056C	IIA	NS4	
VS N056D	IIB	NS4	
LT N027	—		K615
dPT N032	—		K615
LT-N027	—		K615
dPT-N032	—	SRV TEST	K615
PT-N018	—		
PS-N413A,C	I	RHR(A), LPCS	
PS-N413B,D	II	RHR(B) & (C)	

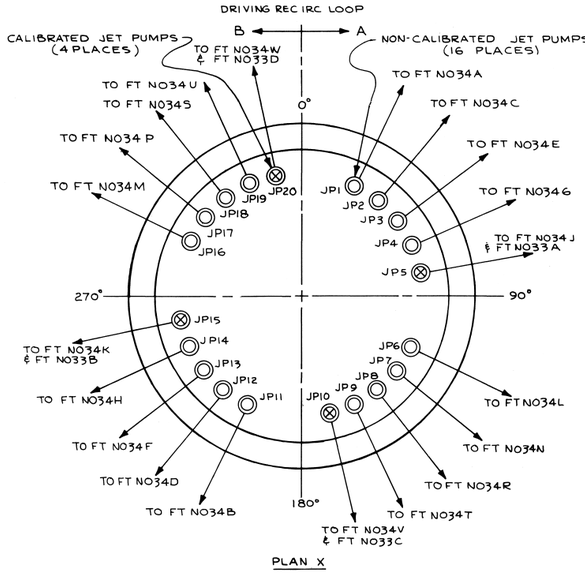

NOTES:

1. REF. DOC. 1 SHALL BE USED WITH AND FORM PART OF THIS P&ID DATA. IF THERE ARE ANY CONFLICTS BETWEEN THE P&ID AND THIS P&ID DATA, THE P&ID DATA SHALL GOVERN.
2. MPL NO'S ARE PREFIXED BY B22 UNLESS OTHERWISE NOTED.
3. WATER LEVEL INSTRUMENTS FOR VARIOUS RANGES ARE CALIBRATED AS STATED BELOW. ALL WATER LEVEL SWITCH SET POINTS ARE NOMINAL. IE. THE ANALYSES ARE PERFORMED WITH THE SWITCH TRIP UNCERTAINTY INCLUDED. REACTOR BUILDING TEMPERATURE ASSUMED TO BE 75°F.
   - A. FUEL ZONE: THE INSTRUMENTS ARE CALIBRATED FOR SATURATED WATER STEAM CONDITIONS AT 0 PSIG IN THE VESSEL AND THE DRYWELL WITH NO JET PUMP FLOW. WATER LEVEL SWITCH TRIP UNCERTAINTY 15 ± 6" OF WATER LEVEL AT CALIBRATION CONDITIONS.
   - B. WIDE RANGE: THE INSTRUMENTS ARE CALIBRATED FOR 1000 PSIG IN THE VESSEL, 135°F IN THE DRYWELL AND 20 BTU/LB SUBCOOLING BELOW THE MIDDLE WATER LEVEL NOZZLE AND SATURATED CONDITIONS ABOVE THE MIDDLE WATER LEVEL NOZZLE WITH NO JET PUMP FLOW. WATER LEVEL SWITCH TRIP UNCERTAINTY 15 ± 6" OF WATER LEVEL AT CALIBRATION CONDITIONS.
   - C. NARROW RANGE: (SAFEGUARDS AND FEEDWATER): THE INSTRUMENTS ARE CALIBRATED FOR SATURATED WATER STEAM CONDITIONS AT 1000 PSIG IN THE VESSEL AND 135°F IN THE DRYWELL. WATER LEVEL SWITCH TRIP UNCERTAINTY IS ± 1.5" OF WATER LEVEL AT CALIBRATION CONDITIONS.
   - D. UPSET RANGE: THE INSTRUMENT IS CALIBRATED FOR SATURATED WATER STEAM CONDITIONS AT 1000 PSIG IN THE VESSEL AND 135°F IN THE DRYWELL.
   - E. SHUTDOWN: THE INSTRUMENT IS CALIBRATED FOR 120°F WATER AT 0 PSIG IN VESSEL AND 80°F IN THE DRYWELL.

REFERENCE DOCUMENTS:

1. NUCLEAR BOILER SYSTEM P&ID----------822-1010
2. FEEDWATER CONTROL SYSTEM IED----------C34-1010
3. NUCLEAR BOILER SYSTEM FCD----------822-1030
4. ELEC EQ SEP SAFEGUARD SYS----------462-4050
5. REMOTE SHUTDOWN SYS IED----------C61-1010

TABLE II: JET PUMP INSTRUMENTATION SUFFIX LETTER ASSIGNMENT

LOOP	A										B									
JP NO.	1	2	3	4	5	6	7	8	9	10	11	12	13	14	15	16	17	18	19	20
FT N034 E/S K615	A	C	E	G	J	L	N	R	T	V	B	D	F	H	K	M	P	S	U	W
dPI R608	A	C	E	G	J	L	N	R	T	V	B	D	F	H	K	M	P	S	U	W
√ K600	A	C	E	G	J	L	N	R	T	V	B	D	F	H	K	M	P	S	U	W
Σ	K601A				K601C			K607A			K601B				K601D			K607B		
Σ	K602A										K602B									
Ⓒ	A1751	A1752	A1753	A1754	A1755	A1756	A1757	A1758	A1759	A1760	A1761	A1762	A1763	A1764	A1765	A1766	A1767	A1768	A1769	A1770
FT N033	—	—	—	—	A	—	—	—	—	C	—	—	—	—	B	—	—	—	—	D
√ K605	—	—	—	—	A	—	—	—	—	C	—	—	—	—	B	—	—	—	—	D
FIR609	—	—	—	—	A	—	—	—	—	C	—	—	—	—	B	—	—	—	—	D

THE SUPPLY SYSTEM IS RESPONSIBLE FOR DESIGN CHANGE CONTROL OF THIS DOCUMENT

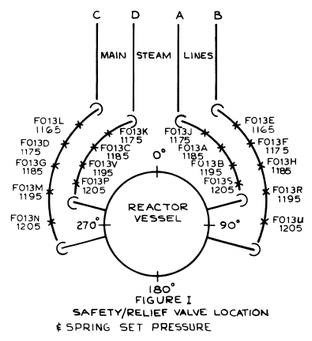

FIGURE I
SAFETY/RELIEF VALVE LOCATION & SPRING SET PRESSURE

FSAR FIG.

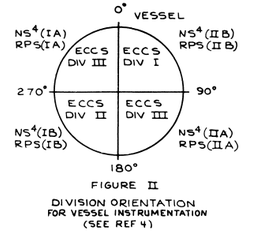

FIGURE II
DIVISION ORIENTATION FOR VESSEL INSTRUMENTATION (SEE REF 4)

02-			
02B22-04	26	22	1
CVI NO	CVI SHT	REV	DWG SHT

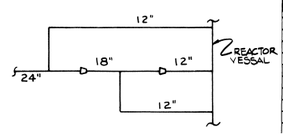

FEEDWATER PIPING DETAIL (TYPICAL)

Columbia Generating Station
Final Safety Analysis Report

Nuclear Boiler System - P&ID

Draw. No. 02B22-04,26,1	Rev. 22	Figure 5.2-5

Form No. 960690ai

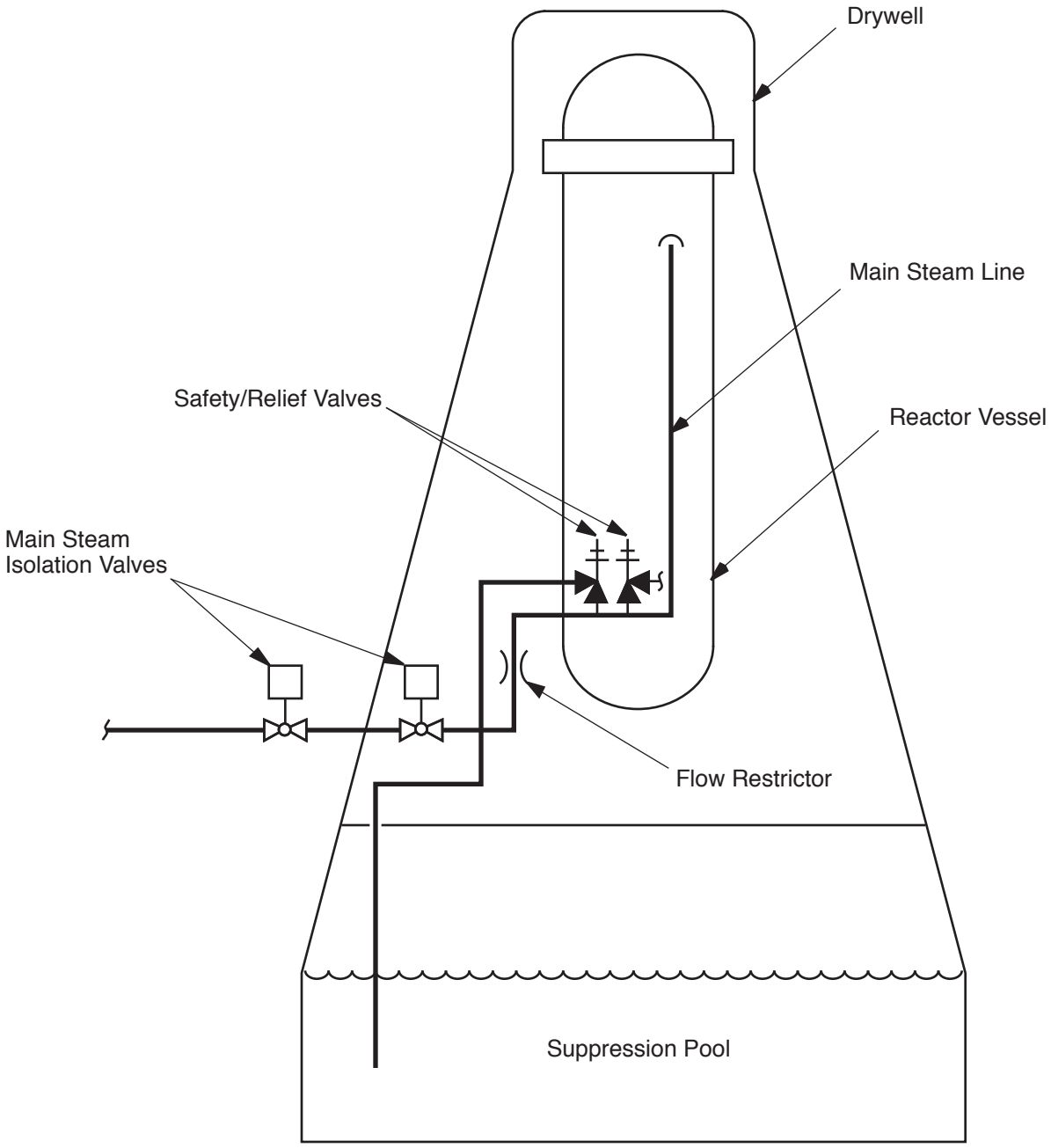

Columbia Generating Station
Final Safety Analysis Report

Safety/Relief Valve Schematic Elevation

Draw. No. 960690.49	Rev.	Figure 5.2-6

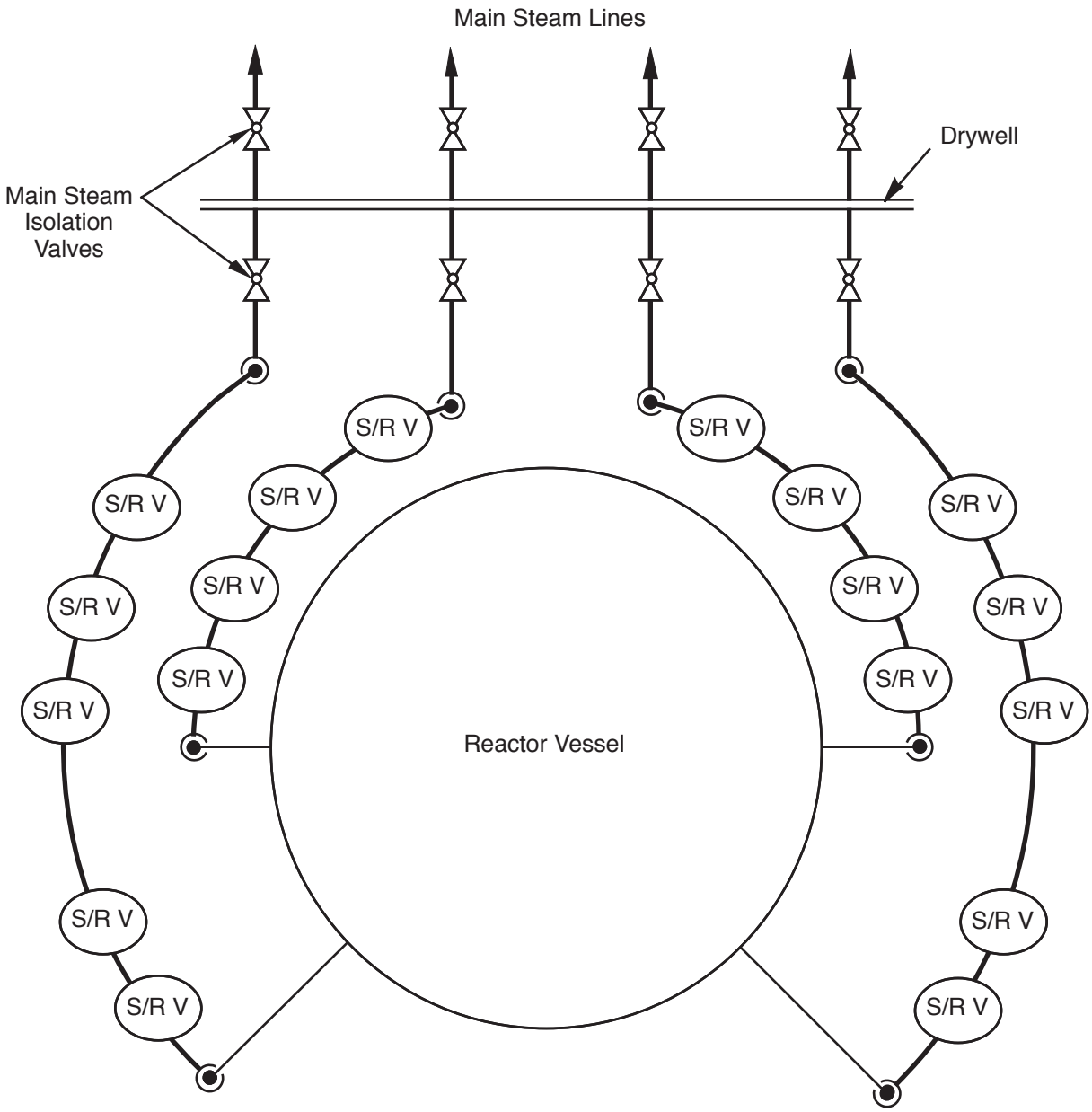

Columbia Generating Station **Final Safety Analysis Report**	**Safety/Relief Valve and Steam Line Schematic**		
	Draw. No. **960690.62**	Rev.	Figure **5.2-7**

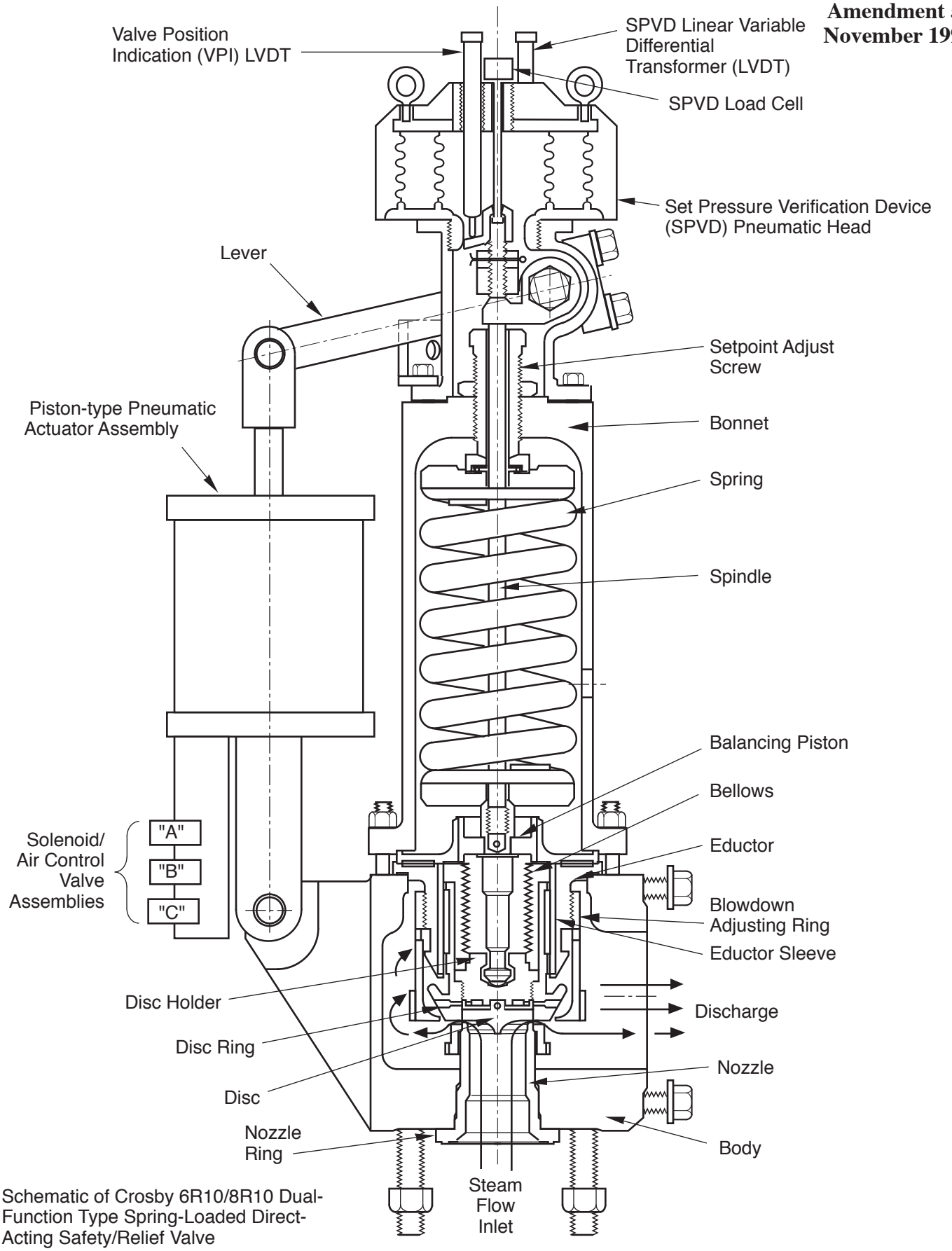

Schematic of Crosby 6R10/8R10 Dual-Function Type Spring-Loaded Direct-Acting Safety/Relief Valve

Columbia Generating Station
Final Safety Analysis Report

Schematic of Safety Valve with Auxiliary Actuating Device

Draw. No. 960690.85	Rev.	Figure 5.2-8

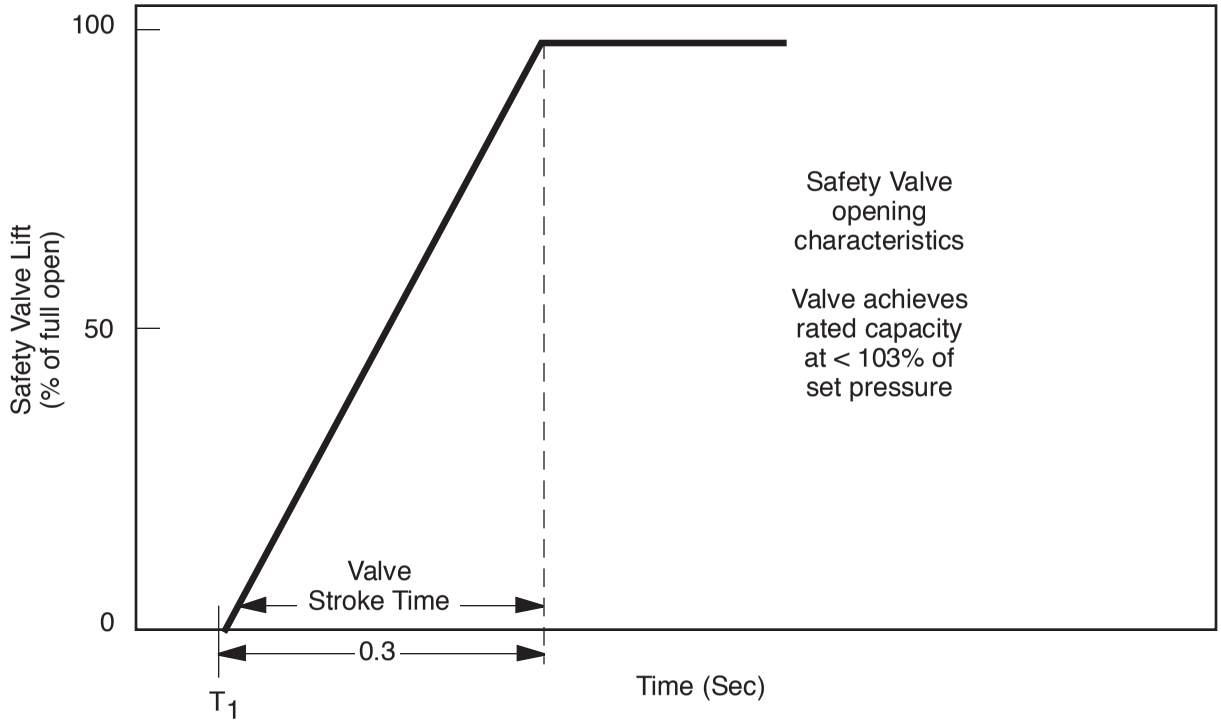

T_1 = Time at which pressure exceeds the valve set pressure

Columbia Generating Station **Final Safety Analysis Report**	**Safety Valve Lift Versus Time Characteristics**		
	Draw. No. **960690.50**	Rev.	Figure **5.2-9**

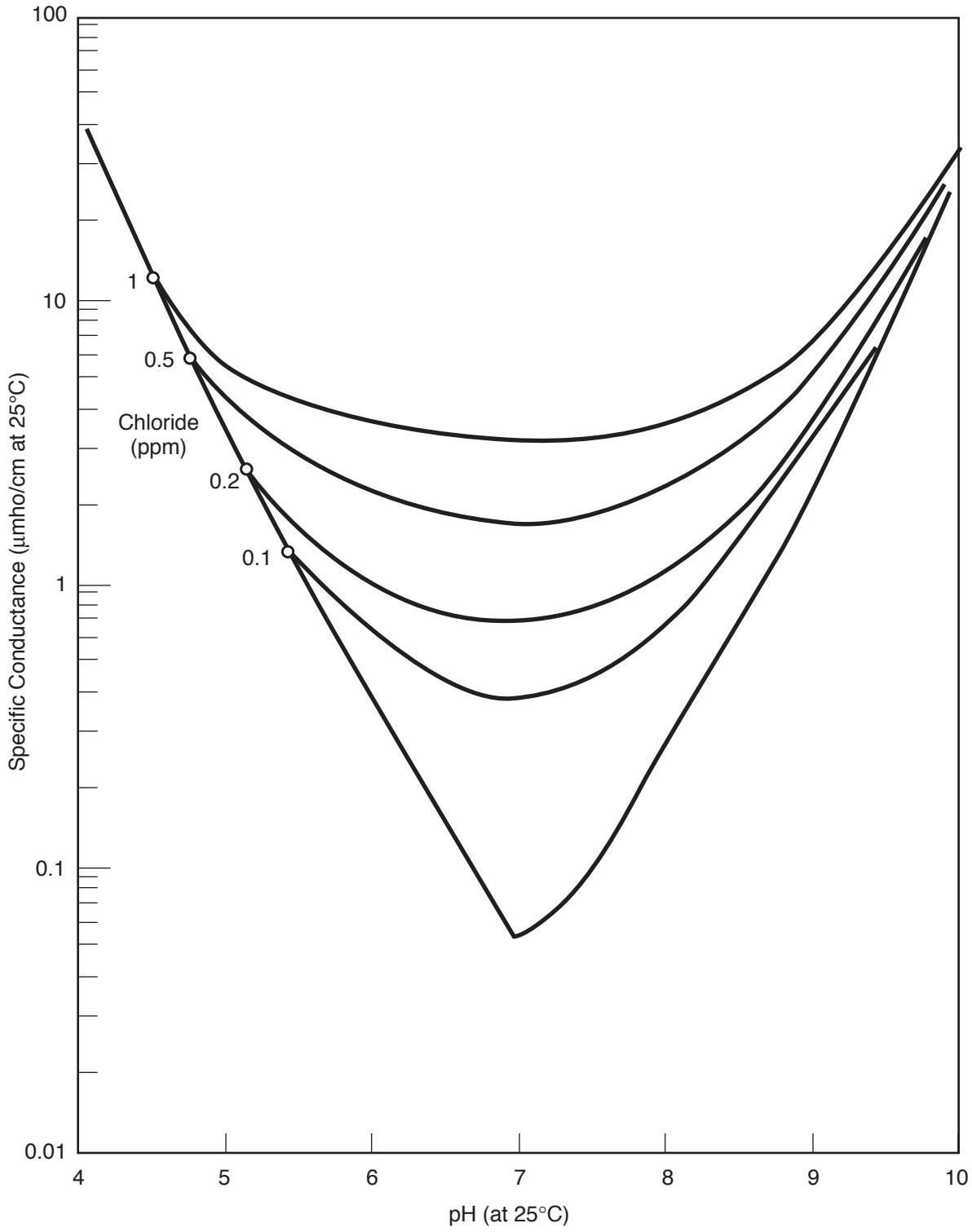

Columbia Generating Station Final Safety Analysis Report	Conductance Versus pH as a Function of Chloride Concentration of Aqueous Solution at 25°C		
	Draw. No. 960690.51	Rev.	Figure 5.2-10

DELETED

Columbia Generating Station Final Safety Analysis Report	Typical BWR Characteristic MSIV Closure Flux Scram		
	Draw. No. 960690.52	Rev.	Figure 5.2-11

5.3 REACTOR VESSEL

5.3.1 REACTOR VESSEL MATERIALS

5.3.1.1 Materials Specifications

The materials used in the reactor pressure vessel and appurtenances are shown in Table 5.2-7 together with the applicable specifications.

5.3.1.2 Special Processes Used for Manufacturing and Fabrication

The reactor pressure vessel is primarily constructed from low alloy, high strength steel plate and forgings. Plates are ordered to ASME SA-533, Grade B, Class 1, and forgings to ASME SA-508, Class 2. These materials are melted to fine grain practice and are supplied in the quenched and tempered condition. Further restrictions include a requirement for vacuum degassing to lower the hydrogen level and improve the cleanliness of the low alloy steels.

Studs, nuts, and washers for the main closure flange are ordered to ASME SA-540, Grade B23 or Grade B24. Welding electrodes are low hydrogen type ordered to ASME SFA 5.5.

All plate, forgings, and bolting are 100% ultrasonically tested and surface examined by magnetic particle methods or liquid penetrant methods in accordance with ASME Section III Subsection Nuclear Boiler (NB) standards. Fracture toughness properties are also measured and controlled in accordance with subsection NB requirements.

All fabrication of the reactor pressure vessel is performed in accordance with the General Electric Company (GE) approved drawings, fabrication procedures, and test procedures. The shells and vessel heads are made from formed plates and the flanges and nozzles from forgings. Welding performed to join these vessel components is in accordance with procedures qualified per ASME Section III and IX requirements. Weld test samples are required for each procedure for major vessel full penetration welds. Tensile and impact tests are performed to determine the properties of the base metal, heat-affected zone (HAZ) and weld metal. Submerged arc and manual stick electrode welding processes are employed. Electroslag welding is not permitted. Preheat and interpass temperatures employed for welding of low alloy steel meet or exceed the requirements of ASME Section III, Subsection NB. Postweld heat treatment at 1100°F minimum is applied to all low alloy steel welds.

Radiographic examination is performed on all pressure containing welds in accordance with requirements of ASME Section III, Subsection NB-5320. In addition, all welds are given a supplemental ultrasonic examination.

The materials, fabrication procedures, and testing methods used in the construction of boiler water reactor (BWR) reactor pressure vessels meet or exceed requirements of ASME Section III, Class 1 vessels.

5.3.1.3 Special Methods for Nondestructive Examination

The materials and welds on the reactor pressure vessel were examined in accordance with methods prescribed and met the acceptance requirements specified by ASME Boiler and Pressure Vessel (B&PV) Code Section III. In addition, the pressure retaining welds were ultrasonically examined using manual techniques. The ultrasonic examination method, including calibration, instrumentation, scanning sensitivity, and coverage was based on the requirements imposed by ASME Code Section XI in Appendix I. Acceptance standards were equivalent or more restrictive than required by ASME Code Section XI.

5.3.1.4 Special Controls for Ferritic and Austenitic Stainless Steels

The degree of compliance with Regulatory Guides 1.31, 1.34, 1.43, 1.44, 1.50, 1.71, and 1.99 is described in Section 1.8.

5.3.1.5 Fracture Toughness

5.3.1.5.1 Compliance with Code Requirements

The ferritic pressure boundary material of the reactor pressure vessels was qualified by impact testing in accordance with the 1971 edition of Section III ASME Code and Summer 1971 Addenda. From an operational standpoint, the minimum temperature limits for pressurization defined by the 1998 Edition of Section XI ASME Code and 2000 Addenda, Appendix G, Protection Against Nonductile Failure, are used as the basis for compliance with ASME Code Section III.

5.3.1.5.2 Compliance with 10 CFR 50 Appendix G

A major condition necessary for full compliance to Appendix G was satisfaction of the requirements of the Summer 1972 Addenda to Section III. This was not possible with components which were purchased to earlier Code requirements. For the extent of the compliance, see Table 5.3-1.

Ferritic material complying with 10 CFR 50 Appendix G must have both drop-weight tests and Charpy V-notch (CVN) tests with the CVN specimens oriented transverse to the maximum material working direction to establish the RT_{NDT}. The CVN tests must be evaluated against both an absorbed energy and a lateral expansion criteria. The maximum acceptable RT_{NDT} must be determined in accordance with the analytical procedures of ASME Code Section III, Appendix G. Appendix G of 10 CFR 50 requires a minimum of 75 ft-lb upper shelf CVN

energy for beltline material. It also requires at least 45 ft-lb CVN energy and 25 mils lateral expansion for bolting material at the lower of the preload or lowest service temperature.

By comparison, material for the Columbia Generating Station (CGS) reactor vessels was qualified by either drop-weight tests or longitudinally oriented CVN tests (both not required), confirming that the material nil-ductility transition temperature (NDTT) is at least 60°F below the lowest service temperature. When the CVN test was applied, a 30 ft-lb energy level was used in defining the NDTT. There was no upper shelf CVN energy requirement on the beltline material. The bolting material was qualified to a 30 ft-lb CVN energy requirement at 60°F below the minimum preload temperature.

From the previous comparison it can be seen that the fracture toughness testing performed on the CGS reactor vessel material cannot be shown to comply with 10 CFR 50 Appendix G. However, to determine operating limits in accordance with 10 CFR 50 Appendix G, estimates of the beltline material RT_{NDT} and the highest RT_{NDT} of all other material were made and are discussed in Section 5.3.1.5.2.2. The method for developing these operating limits is also described therein.

On the basis of the last paragraph on page 19013 of the July 17, 1973, Federal Register, the following is considered an appropriate method of compliance.

5.3.1.5.2.1 Intent of Proposed Approach. The intent of the proposed special method of compliance with 10 CFR 50 Appendix G for this vessel is to provide operating limitations on pressure and temperature based on fracture toughness. These operating limits ensure that a margin of safety against a nonductile failure of this vessel is very nearly the same as that for a vessel built to the Summer 1972 Addenda.

The specific temperature limits for operation when the core is critical are based on 10 CFR 50 Appendix G, Paragraph IV, A.2.C.

5.3.1.5.2.2 Operating Limits Based on Fracture Toughness. Operating limits which define minimum reactor vessel metal temperatures versus reactor pressure during normal heatup and cooldown and during inservice hydrostatic testing were established using the methods of Appendix G of Section XI of the ASME B&PV Code, 1998 Edition, 2000 Addenda. The results are shown in Figure 5.3-1.

All the vessel shell and head areas remote from discontinuities plus the feedwater nozzles were evaluated, and the operating limit curves are based on the limiting location. The boltup limits for the flange and adjacent shell region are based on a minimum metal temperature of RT_{NDT} +60°F. The maximum through-wall temperature gradient from continuous heating or cooling at 100°F/hr was considered. The safety factors applied were as specified in ASME Section XI Appendix G.

For the purpose of setting these operating limits the reference temperature, RT_{NDT}, is determined from the toughness test data taken in accordance with requirements of the code to which this vessel is designed and manufactured. This toughness test data, CVN and/or dropweight NDT, is analyzed to permit compliance with the intent of 10 CFR 50 Appendix G. Because all toughness testing needed for strict compliance with Appendix G was not required at the time of vessel procurement some toughness results are not available. For example, longitudinal CVNs, instead of transverse, were tested, usually at a single test temperature of +10°F or -20°F, for absorbed energy. Also, at the time either CVN or NDT testing was permitted; therefore, in many cases both tests were not performed as is currently required. To substitute for this absence of certain data, toughness property correlations were derived for the vessel materials to operate on the available data to give a conservative estimate of RT_{NDT} compliant with the intent of Appendix G criteria.

These toughness correlations vary, depending upon the specific material analyzed, and were derived from the results of Welding Research Council (WRC) Bulletin 217, "Properties of Heavy Section Nuclear Reactor Steels," and from toughness data from the CGS vessel and other reactors. In the case of vessel plate material (SA-533 Grade 8, Class 1), the predicted limiting toughness property is either NDT or transverse CVN 50 ft-lb temperature minus 60°F. NDT values are available for CGS vessel shell plates. The transverse CVN 50 ft-lb transition temperature is estimated from longitudinal CVN data in the following manner. The lowest longitudinal CVN 50 ft-lb value is adjusted to derive a longitudinal CVN 50 ft-lb transition temperature by adding 2°F per ft-lb to the test temperature. If the actual data equals or exceeds 50 ft-lb, the test temperature is used. Once the longitudinal 50 ft-lb temperature is derived, an additional 30°F is added to account for orientation effects and to estimate the transverse CVN 50 ft-lb temperature minus 60°F, estimated in the preceding manner.

Using the above general approach, an initial RT_{NDT} of 28°F was established for the core beltline region.

For forgings (SA-508 Class 2), the predicted limiting property is the same as for vessel plates. CVN and NDT values are available for the vessel flange, closure head flange, and feedwater nozzle materials for CGS. RT_{NDT} is estimated in the same way as for vessel plate.

For the vessel weld metal the predicted limiting property is the CVN 50 ft-lb transition temperature minus 60°F, as the NDT values are -50°F or lower for these materials. This temperature is derived in the same way as for the vessel plate material, except the 30°F addition of orientation effects is omitted since there is no principal working direction. When NDT values are available, they are also considered and the RT_{NDT} is taken as the higher of NDT or the 50 ft-lb temperature minus 60°F. When NDT is not available, the RT_{NDT} shall not be less than -50°F, since lower values are not supported by the correlation data.

For vessel weld HAZ material the RT_{NDT} is assumed the same as for the base material as ASME Code weld procedure qualification test requirements, and postweld heat treatment indicates this assumption is valid.

Figure 5.3-2 provides a sketch of the reactor vessel, including the basic dimensions, all longitudinal and circumferential welds, and all plates of the beltline region. Tables 5.3-2 through 5.3-7 contain the supporting information for Figure 5.3-2, such as piece mark, heat number, and impact data for the plates and filler material used in the beltline region.

Closure bolting material (SA-540 Grade B24) toughness test requirements for CGS were for 30 ft-lb at 60°F below the boltup temperature. Current code requirements are for 45 ft-lb and 25 mils lateral expansion at the preload or lowest service temperature, including boltup. All CGS closure stud materials meet current requirements at +10°F.

The effect of the main closure flange discontinuity was considered by adding 60°F to the RT_{NDT} to establish the minimum temperature for boltup and pressurization. The minimum boltup temperature of 80°F for CGS, which is shown on Figure 5.3-1, is based on an initial RT_{NDT} of +20°F for the shell plate connecting to the closure flange forgings.

The effect of the feedwater nozzle discontinuities were considered by adjusting the results of a BWR/6 reactor discontinuity analysis to the reactor. The adjustment was made by increasing the minimum temperatures required by the difference between the CGS and BWR/6 feedwater nozzle forging RT_{NDT}. The feedwater nozzle adjustment was based on an RT_{NDT} of 0°F.

The reactor vessel closure studs have a minimum Charpy impact energy of 45 ft-lb and 26 mils lateral expansion at 10°F. The lowest service temperature for the closure studs is 10°F.

Vessel irradiation embrittlement of beltline materials, as measured by adjusted reference temperatures and upper shelf energies due to increased flux, was evaluated against the requirements of 10 CFR 50 Appendix G. For a predicted RPV peak fluence of 1.28E+18 n/cm^2 at 54 EFPY, fracture toughness values are acceptable and remain within Appendix G limits for the pressure temperature limit curves provided in Figure 5.3-1.

5.3.1.5.2.3 Temperature Limits for Boltup. A minimum temperature of 10°F is required for the closure studs. A sufficient number of studs may be tensioned at 70°F to seal the closure flange O-rings for the purpose of raising reactor water level above the closure flanges to assist in warming them. The flanges and adjacent shell are required to be warmed to a minimum temperature of 80°F before they are stressed by the full intended bolt preload. The fully preloaded boltup limits are shown in Figure 5.3-1.

5.3.1.5.2.4 Inservice Inspection Hydrostatic or Leak Pressure Tests. Based on 10 CFR 50 Appendix G, and Regulatory Guide 1.99, Revision 2, requirements, pressure/temperature limit curves were established based on an RT_{NDT} of 28°F for the limiting beltline material; see Figure 5.3-1. The fracture toughness analysis for inservice inspection of leak test resulted in curve A shown in Figure 5.3-1. The predicted shift in the RT_{NDT} temperature was determined using the methodology outlined in Regulatory Guide 1.99, Revision 2.

Technical Specification 3.10.1 allows inservice leak and hydrostatic testing to be performed in Mode 4 when the metallurgical characteristics of the reactor pressure vessel require testing at temperatures greater than 200°F, given specified Mode 3 Limiting Conditions for Operations are met. This exemption is only applicable provided reactor coolant temperature does not exceed 275°F.

5.3.1.5.2.5 Operating Limits During Heatup, Cooldown, and Core Operation. The fracture toughness analysis was done for the normal heatup or cooldown rate of 100°F/hr. The temperature gradients and thermal stress effects corresponding to this rate were included. The results of the analysis are operating limits defined by Figure 5.3-1. Curves A, B, and C give the limits for hydrotest, nonnuclear heating, and nuclear heating. The minimum boltup temperature of 80°F is based on an RT_{NDT} at 20°F for a shell plate which connects to the lower flange (Heat and Slab No. C-1307-2); above 80°F the core beltline plate (Heat and Slab No. C-1272-1), which has an initial RT_{NDT} of 28°F, is most limiting for inservice hydrostatic or leak pressure tests (curve A). The feedwater nozzles, which have a maximum RT_{NDT} of 0°F, are more restrictive than the core beltline at lower pressures during nonnuclear and nuclear heating (curves B and C).

5.3.1.5.2.6 Reactor Vessel Annealing. Inplace annealing of the reactor vessel to counteract radiation embrittlement is unnecessary because beltline material adjusted reference temperature of the NDT is well within the 10 CFR 50 Appendix G 200°F screening limit.

5.3.1.6 Material Surveillance

The materials surveillance program monitors changes in the fracture toughness properties of ferritic materials in the reactor vessel beltline region resulting from exposure to neutron irradiation and thermal environment. See also FSAR A.2.1.46

The CGS plant-specific RPV materials surveillance program is replaced by the NRC approved BWR Vessel and Internals Project (BWRVIP) Integrated Surveillance Program (ISP), as described in the latest approved revision of BWRVIP-86 (Reference 5.3.4-2). The ISP meets the requirements of 10 CFR 50, Appendix H.

The current surveillance capsule withdrawal schedule for the representative materials for the CGS vessel is based on the latest approved revision of BWRVIP-86 (Reference 5.3.4-2). No capsules from the CGS vessel are included in the ISP. The withdrawal of capsules for the

CGS plant-specific surveillance program is permanently deferred by participation in the ISP. Capsules from other plants will be removed and tested in accordance with the ISP implementation plan. The results from these tests will provide the necessary data to monitor embrittlement for the CGS vessel.

Materials for the plant-specific materials surveillance program were selected to represent materials used in the reactor beltline region. The specimens were manufactured from a plate actually used in the beltline region and a weld typical of those in the beltline region and thus represent base metal, weld metal, and the transition zone between base metal and weld. The plate and weld were heat treated in a manner which simulates the actual heat treatment performed on the core region shell plates of the completed vessel. WPPSS-ENT-089 (Reference 5.3.4-1) provides additional detail and supporting information for the materials surveillance program.

For the extent of compliance to 10 CFR 50 Appendix H, see Table 5.3-8. NEDO-21708 also addressed the requirements of Appendix H to 10 CFR 50 and supports the current application of Regulatory Guide 1.99.

5.3.1.6.1 Positioning of Surveillance Capsules and Method of Attachment for Plant-Specific Surveillance Program

Surveillance specimen capsules are located at two azimuths at a common elevation in the core beltline region. The sealed capsules are not attached to the vessel but are in welded capsule holders. The capsule holders are mechanically restrained by capsule holder brackets as shown in Figure 5.3-4. The capsule holder brackets allow the capsule holder to be removed at any desired time in the life of the plant for specimen testing. A positive spring-loaded locking device is provided to retain the capsules in position throughout any anticipated event during the lifetime of the vessel.

The capsule holder brackets are designed, fabricated, and analyzed to the requirements of the ASME B&PV Code Section III. The surveillance brackets are welded to the clad material which surfaces the pressure vessel walls. As attached, the brackets do not have to comply with specifications of the ASME Code.

5.3.1.6.2 Time and Number of Dosimetry Measurements

General Electric provides a separate neutron dosimeter so that fluence measurements may be made at the vessel ID during the first fuel cycle to verify the predicted fluence at an early date in plant operation. This measurement is made over this short period to avoid saturation of the dosimeters now available. Once the fluence-to-thermal power output is verified, no further dosimetry is considered necessary because of the linear relationship between fluence and power output.

5.3.1.6.3 Neutron Flux and Fluence Calculations

A description of the methods of analysis for neutron flux and fluence calculations is contained in Sections 4.1.4.5 and 4.3.2.8.

5.3.1.7 Reactor Vessel Fasteners

The reactor vessel closure head (flange) is fastened to the reactor vessel shell flange by multiple sets of threaded studs and nuts. The lower end of each stud is installed in a thread hole in its vessel shell flange. A nut and washer are installed on the upper end of each stud. The proper amount of preload can be applied to the studs by sequential tensioning using hydraulic tensioners. The design and analysis of this area of the vessel is in full compliance with all Section III Class 1 Code requirements. The material for studs, nuts, and washers is SA-540, Grade B23 or B24. The maximum reported ultimate tensile stress for the bolting material was 167,000 psi which is less than the 170,000 psi limitation in Regulatory Guide 1.65. Also the Charpy impact test recommendations of Paragraph IV.A.4 of Appendix G to 10 CFR 50 were not specified in the vessel order since the order was placed prior to issuance of Appendix G to 10 CFR 50. However, impact data from the certified materials report shows that all bolting material has met the Appendix G impact properties. For example, the lowest reported CVN energy was 45 ft-lb at 10°F versus the required 45 ft-lb at 70°F and the lowest reported CVN expansion was 26 mils at 10°F versus the required 25 mils at 70°F.

Hardness tests are performed on all main closure bolting to demonstrate that heat treatment has been properly performed. Studs, nuts, and washers are ultrasonically examined in accordance with Section III, NB-2585 and the following additional requirements:

a. Examination is performed after heat treatment and prior to machining threads.

b. Straight beam examination is performed on 100% of each stud. Reference standard for the radial scan is 0.5-in. diameter flat bottom hole having a depth equal to 10% of the material thickness. For the end scan the reference standard is a 0.5-in. flat bottom hole having a depth of 0.5 in. For additional details of the techniques used to examine the reactor vessel studs, see the response to Regulatory Guide 1.65, Revision 0, October 1973, in Section 1.8.

c. Nuts and washers are examined by angle beam from the outside circumference in both the axial and circumferential directions.

There are no metal platings applied to closure studs, nuts, or washers. A phosphate coating is applied to threaded areas of studs and nuts and bearing areas of nuts and washers to act as a rust inhibitor and to assist in retaining lubricant on these surfaces.

5.3.2 PRESSURE-TEMPERATURE LIMITS

5.3.2.1 Limit Curves

Limits on pressure and temperature for inservice leak and hydrostatic tests, normal operation (including heatup and cooldown), and reactor core operation are shown in Figure 5.3-1. The basis used to determine these limits is described in Section 5.3.1.5.

5.3.2.2 Operating Procedures

By comparison of the pressure versus temperature limits in Figure 5.3-1 with intended normal operating procedures for the most severe upset transient, it is shown that the limits will not be exceeded during any foreseeable upset condition. Reactor operating procedures have been established such that actual transients will not be more severe than those for which the vessel design adequacy has been demonstrated. Of the design transients, the upset condition producing the most adverse temperature and pressure condition anywhere in the vessel head and/or shell areas has a minimum fluid temperature of 250°F and a maximum pressure peak of 1180 psig. Scram automatically occurs with initiation of this event, prior to the reduction in fluid temperature, such that the applicable operating limits are bounded by curve A of Figure 5.3-1. Figure 5.3-1 show that at the maximum transient pressure of 1180 psig, the minimum allowable reactor vessel metal temperature conservatively bounds the minimum 250°F reactor fluid temperature.

5.3.3 REACTOR VESSEL INTEGRITY

The reactor vessel was fabricated for GE's Nuclear Energy Division by CBI Nuclear Co., and was subject to the requirements of GE's Quality Assurance program.

Assurance was made that measures were established requiring that purchased material, equipment, and services associated with the reactor vessel and appurtenances conform to the requirements of the subject purchase documents. These measures included provisions, as appropriate, for source evaluation and selection, objective evidence of quality furnished, inspection at the vendor source, and examination of the completed reactor vessel.

Energy Northwest's agent provided inspection surveillance of the reactor vessel fabricators in process manufacturing, fabrication, and testing operations in accordance with GE's Quality Assurance program and approved inspection procedures. The reactor vessel fabricator was responsible for the first level inspection of manufacturing, fabrication, and testing activities, and GE was responsible for the first level of audit and surveillance inspection.

Adequate documentary evidence that the reactor vessel material, manufacture, testing, and inspection conforms to the specified quality assurance requirements contained in the procurement specification is available in plant records.

5.3.3.1 Design

5.3.3.1.1 Description

5.3.3.1.1.1 Reactor Vessel. The reactor vessel shown in Figure 5.3-5 is a vertical, cylindrical pressure vessel of welded construction. The vessel is designed, fabricated, tested, inspected, and stamped in accordance with the ASME Code Section III, Class 1, including the addenda in effect at the date of order placement. Design of the reactor vessel and its support system meets Seismic Category I equipment requirements. The materials used in the reactor pressure vessel are shown in Table 5.2-7.

The cylindrical shell and bottom head sections of the reactor vessel are fabricated of low alloy steel, the interior of which is clad with stainless steel weld overlay. Nozzle and nozzle weld zones are unclad except for those mating to stainless steel piping systems.

Inplace annealing of the reactor vessel is unnecessary because shifts in transition temperature caused by irradiation during the 40-year life can be accommodated by raising the minimum pressurization temperature. Radiation embrittlement is not a problem outside of the vessel beltline region because the irradiation in those areas is less than 1×10^{18} nvt with neutron energies in excess of 1 MeV. The inside diameter and minimum wall thickness of the reactor vessel beltline is provided in Table 5.3-9.

The extent of RV embrittlement, with respect to USE and ART, is projected for 60 years in accordance with RG 1.99, Revision 2. These projections will be updated throughout the remaining operating life if new information becomes available.

Quality control methods used during the fabrication and assembly of the reactor vessel and appurtenances ensure that design specifications were met. The vessel top head is secured to the reactor vessel by studs and nuts. These nuts are tightened with a stud tensioner. The vessel flanges are sealed with two concentric metal seal rings designed to permit no detectable leakage through the inner or outer seal at any operating condition, including heating to operating pressure and temperature at a maximum rate of 100°F/hr in any 1-hr period. To detect seal failure, a vent tap is located between the two seal rings. A monitor line is attached to the tap to provide an indication of leakage from the inner seal ring seal.

5.3.3.1.1.2 Shroud Support. The shroud support is a circular plate welded to the vessel wall. This support is designed to carry the weight of the shroud, shroud head, peripheral fuel elements, neutron sources, core plate, top guide, the steam separators, the jet pump diffusers, jet pump slip joint clamps, and to laterally support the fuel assemblies. Design of the shroud support also accounts for pressure differentials across the shroud support plate, for the restraining effect of components attached to the support, and for earthquake loadings. The shroud support design is specified to meet appropriate ASME Code stress limits.

5.3.3.1.1.3 Protection of Closure Studs. The BWR does not use borated water for reactivity control. This section is therefore not applicable.

5.3.3.1.2 Safety Design Bases

Design of the reactor vessel and appurtenances meet the following safety design bases:

a. The reactor vessel and appurtenances will withstand adverse combinations of loading and forces resulting from operation under abnormal and accident conditions, and

b. To minimize the possibility of brittle fracture of the nuclear system process barrier, the following are required:

1. Impact properties at temperatures related to vessel operation have been specified for materials used in the reactor vessel.

2. Expected shifts in transition temperature during design life as a result of environmental conditions, such as neutron flux, are considered in the design. Operational limitations ensure that NDTT shifts are accounted for in reactor operation.

3. Operational margins to be observed with regard to the transition temperature are specified for each mode of operation.

5.3.3.1.3 Power Generation Design Basis

The design of the reactor vessel and appurtenances meets the following power generation design basis:

a. The reactor vessel has been designed for a useful life of 40 years,

b. External and internal supports that are integral parts of the reactor vessel are located and designed so that stresses in the vessel and supports that result from reactions at these supports are within ASME Code limits, and

c. Design of the reactor vessel and appurtenances allow for a suitable program of inspection and surveillance.

d. The application of the Columbia AMPs verifies that the identified structures, systems, and components will continue to provide their identified intended function(s) during the period of extended operation.

5.3.3.1.4 Reactor Vessel Design Data

Reactor vessel design data are contained in Tables 5.2-6 and 5.2-7.

5.3.3.1.4.1 Vessel Support. The concrete and steel vessel support pedestal is constructed as an integral part of the building foundation. Steel anchor bolts set in the concrete extend through the bearing plate and secure the flange of the reactor vessel support skirt to the bearing plate and thus to the support pedestal.

5.3.3.1.4.2 Control Rod Drive Housings. The control rod drive (CRD) housings are inserted through the CRD penetrations in the reactor vessel bottom head and are welded to the reactor vessel. Each housing transmits loads to the bottom head of the reactor. These loads include the weights of a control rod, a CRD, a CRD tube, a four-lobed fuel support piece, and the four fuel assemblies that rest on the fuel support piece. The housings are fabricated of Type 304 austenitic stainless steel.

5.3.3.1.4.2.1 Control Rod Drive Return Line. To preclude CRD return line cracking on CGS, the return line was deleted and the system modified. The modification consists of adding pressure equalizing valves between the exhaust and cooling water headers and the use of reverse flow through multiple hydraulic control unit (HCU) solenoid valves as the CRD system exhaust flow path. The acceptance of this modification is based on system analyses and performance tests conducted on operating BWRs which have shown satisfactory system operation. The system tests showed that system pressure transients, CRD settling times, and CRD speeds were all unchanged. The tests also showed that all systems functions performed normally.

5.3.3.1.4.3 In-Core Neutron Flux Monitor Housings. Each in-core neutron flux monitor housing is inserted through the in-core penetrations in the bottom head and is welded to the inner surface of the bottom head.

An in-core flux monitor guide tube is welded to the top of each housing and either a source range monitor/intermediate range monitor drive unit or a local power range monitor is bolted to the seal/ring flange at the bottom of the housing.

5.3.3.1.4.4 Reactor Vessel Insulation. The insulation panels for the cylindrical shell of the vessel are self-supporting, with seismic restraints attached to the sacrificial shield wall. The insulation is designed to be removable over those portions of the vessel where required for the purpose of in-service inspection.

5.3.3.1.4.5 Reactor Vessel Nozzles. All piping connecting to the reactor vessel nozzles has been designed so as not to exceed the allowable loads on any nozzle.

The vessel top head nozzle is provided with a flange with large groove facing. The drain nozzle is of the full penetration weld design. The recirculation inlet nozzles (located as shown in Figure 5.3-5), feedwater inlet nozzles, core spray inlet nozzles, low-pressure coolant injection (LPCI) nozzles, and the CRD hydraulic system return nozzle all have thermal sleeves. Nozzles connecting to stainless steel piping have safe ends or extensions made of

stainless steel. These safe ends or extensions were welded to the nozzles after the pressure vessel was heat treated to avoid furnace sensitization of the stainless steel. The material used is compatible with the material of the mating pipe.

The nozzle for the standby liquid control (SLC) pipe was designed to minimize thermal shock effects on the reactor vessel in the event of injection of cold SLC solution. However, the SLC injection pipe has been relocated to a nozzle on the high-pressure core spray (HPCS) injection line and no longer uses the old nozzle in the bottom head of the reactor pressure vessel. The old nozzle is still in service as the connection for pressure sensing below the core plate, but there is no flow through the nozzle under any operating condition.

In the past, thermal fatigue cracking of feedwater nozzles and vibrational cracking of sparger arms have been observed at other operating BWRs. The mechanisms which have caused cracking in other operating BWRs are understood. A summary discussion of these problems and the solutions incorporated in the CGS design is presented in the following.

A detailed evaluation of the problems of the feedwater nozzle and sparger is presented in NEDE-21821, "BWR Feedwater Nozzle/ Sparger Final Report," March 1978. The solution of the feedwater nozzle and sparger cracking problems involved several elements, including material selection and processing, nozzle clad elimination, and thermal sleeve and sparger redesign. The following summarizes the problems and solutions that have been implemented in the CGS design.

Problem	Cause	Fix
Sparger arm cracks	Vibration	Eliminated clearance between thermal sleeve and safe end
RPV feedwater thermal fatigue	Thermal	Eliminated clad, eliminated leakage with a welded joint between the sparger and safe end

The sparger vibration has been attributed to a self-excitation caused by instability of leakage flow through the annular clearance between the thermal sleeve and safe end. Tests have shown that the vibration is eliminated if the clearance is reduced sufficiently or sealed. The solution that was selected for CGS uses a welded joint to ensure no leakage. This feature is also an essential part of the solution of the nozzle cracking problem. Freedom from vibration over a range of conditions has been demonstrated by the tests reported in NEDE-23604 (see Figures 5.3-6 and 5.3-7).

The cracking of the feedwater nozzles is a two-part process. The crack initiation mechanism as discussed above is the result of self-initiated thermal cycling. If this were the only mechanism present, the cracks would initiate, grow to a depth of approximately 0.25 in., and arrest. This degree of cracking could be tolerated; however, there is another mechanism which supports crack growth. This mechanism is the system induced transients, primarily the startup/shutdown transients. Because of CGS's welded thermal sleeve arrangement, leakage flow is eliminated and the heat transfer between the feedwater and the nozzle are reduced to the point where the thermal stresses in the nozzle are not high enough to cause a significant crack growth. Analyses presented in NEDE-21821, Section 4.7, demonstrated the benefits of the welded thermal sleeve and of using unclad nozzles. With these demonstrated benefits and inservice surveillance, CGS found it unnecessary to install instrumentation for design verification.

CGS has installed two automatic feedwater low flow control valves, RFW-FCV-10A and 10B. These valves have the capacity to control flow down to 362 gpm, or about 1.25% of total flow. This valve configuration will substantially reduce the temperature differential between the feedwater and the water in the RPV during low power operation, also reducing the thermal stresses in the nozzle.

5.3.3.1.4.6 Materials and Inspection. The reactor vessel was designed and fabricated in accordance with the appropriate ASME B&PV Code as defined in Section 5.2.1.2. Table 5.2-7 defines the materials and specifications. Table 5.3-8 defines the compliance with reactor vessel material surveillance program requirements.

5.3.3.1.4.7 Reactor Vessel Schematic (BWR). The reactor vessel schematic is contained in Figure 5.3-3. Trip system water levels are indicated as shown.

5.3.3.2 Materials of Construction

All materials used in the construction of the reactor pressure vessel conform to the requirements of ASME Code Section II materials. The vessel heads, shells, flanges, and nozzles are fabricated from low alloy steel plate and forgings purchased in accordance with ASME specifications SA533 Grade B Class 1 and SA-508 Class 2. Special requirements for the low alloy steel plate and forgings are discussed in Section 5.3.1.2. Cladding employed on the interior surfaces of the vessel consists of austenitic stainless steel weld overlay.

These materials of construction were selected because they provide adequate strength, fracture toughness, fabricability, and compatibility with the BWR environment. Their suitability has been demonstrated by long-term successful operating experience in reactor service.

5.3.3.3 Fabrication Methods

The reactor pressure vessel is a vertical cylindrical pressure vessel of welded construction fabricated in accordance with ASME Code Section III, Class 1, requirements. All fabrication of the reactor pressure vessel was performed in accordance with buyer-approved drawings, fabrication procedures, and test procedures. The shells and vessel heads were made from formed low alloy steel plates and the flanges and nozzles from low alloy steel forgings. Welding performed to join these vessel components was in accordance with procedures qualified per ASME Section III and IX requirements. Weld test samples were required for each procedure for major vessel full penetration welds.

Submerged arc and manual stick electrode welding processes were employed. Electroslag welding was not permitted. Preheat and interpass temperatures employed for welding of low alloy steel met or exceeded the requirements of ASME Section III, Subsection NB. Postweld heat treatment of 1100°F minimum was applied to all low alloy steel welds.

All previous BWR pressure vessels have employed similar fabrication methods. These vessels have operated for periods up to 16 years and their service history is excellent.

The vessel fabricator, CBI Nuclear Co., has had extensive experience with GE, reactor vessels, and has been the primary supplier for GE domestic reactor vessels and some foreign vessels since the company was formed in 1972 from a merger agreement between Chicago Bridge and Iron Co. and GE. Prior experience by the Chicago Bridge and Iron Co. with GE reactor vessels dates back to 1966.

5.3.3.4 Inspection Requirements

All plate, forgings, and bolting were 100% ultrasonically tested and surface examined by magnetic particle methods or liquid penetrant methods in accordance with ASME Section III requirements. Welds on the reactor pressure vessel were examined in accordance with methods prescribed and met the acceptance requirements specified by ASME Section III. In addition, the pressure-retaining welds were ultrasonically examined using acceptance standards which were required by ASME Section XI.

5.3.3.5 Shipment and Installation

The completed reactor vessel was given a thorough cleaning and examination prior to shipment. The vessel was tightly sealed for shipment to prevent entry of dirt or moisture. Preparations for shipment were in accordance with detailed written procedures. On arrival at the reactor site the reactor vessel was carefully examined for evidence of any contamination as a result of damage to shipping covers. Suitable measures were taken during installation to ensure that vessel integrity was maintained; for example, access controls were applied to

personnel entering the vessel, weather protection was provided, periodic cleanings were performed, and only approved miscellaneous materials were used during assembly.

5.3.3.6 Operating Conditions

Restrictions on plant operation to hold thermal stresses within acceptable ranges are included in the Technical Specifications. These restrictions on coolant temperature are

a. The average rate of change of reactor coolant temperature during normal heatup and cooldown,

b. Coolant temperature difference between the dome (inferred from P_{sat}) and the bottom head drain, and

c. Idle reactor recirculation loop and average reactor coolant temperature differential.

The limit regarding the normal rate of heatup and cooldown (item a) assures that the vessel closure, closure studs, vessel support skirt, and CRD housing and stub tube stresses and usage remain within acceptable limits. The vessel temperature limit on recirculating pump operation and power level increase restriction (item b) augments the item a limit in further detail by ensuring that the vessel bottom head region will not be warmed at an excessive rate caused by rapid sweep out of cold coolant in the vessel lower head region by recirculating pump operation or natural circulation (cold coolant can accumulate as a result of control drive inleakage and/or low recirculation flow rate during startup or hot standby). The item c limit further restricts operation of the recirculating pumps to avoid high thermal stress effects in the pumps and piping, while also minimizing thermal stresses on the vessel nozzles.

The above operational limits when maintained insure that the stress limits within the reactor vessel and its components are within the thermal limits to which the vessel was designed for normal operating conditions. To maintain the material integrity of the vessel in the event that these operational limits are exceeded the reactor vessel has also been designed to withstand a limited number of transients caused by operator error. Reactor vessel material integrity is also maintained during abnormal operating conditions where safety systems or controls provide an automatic response in the reactor vessel. The special and transient events considered in the design of the vessel are discussed or referenced in Section 5.2.2.

5.3.3.7 Inservice Surveillance

Inservice inspection of the reactor pressure vessel is in accordance with the requirements as discussed in Section 5.2.4. The vessel was examined once prior to startup to satisfy the preoperational requirements of IS-232 or the ASME Code, Section XI. Subsequent inservice

inspection will be scheduled and performed in accordance with the requirements of 10 CFR 50.55a subparagraph (g).

The materials surveillance program monitors changes in the fracture toughness properties of ferritic materials in the reactor vessel beltline region resulting from their exposure to neutron irradiation and thermal environment. See Section 5.3.1.6 for description of the materials surveillance program. Operating procedures will be modified in accordance with test results to ensure adequate brittle fracture control.

Material surveillance programs and inservice inspection programs are in accordance with applicable ASME Code requirements and provide assurance that brittle fracture control and pressure vessel integrity will be maintained throughout the service lifetime of the reactor pressure vessel.

5.3.4 REFERENCES

5.3.4-1 WPPSS-ENT-089, "WNP-2 RPV Surveillance Program," Current Revision.

5.3.4-2 BWRVIP-86, Revision 1-A, "BWR Vessel and Internals Project, Updated BWR Integrated Surveillance Program (ISP) Implementation Plan," Final Report, October 2012.

Table 5.3-1

10 CFR 50 Appendix G Matrix

Appendix G Paragraph	Topic	Comply Yes/No or N/A	Alternative Actions or Comments
I, II	Introduction; Definitions	--	
III.A	Compliance with ASME Code, Section NB-2300	Yes	See Section 5.3.1.5.2 for discussion.
III.B.1	Location and Orientation of Impact Test Spec	Yes	See III.A above.
III.B.2	Materials Used to Prepare Test Specimens	No	Compliance except for CVN orientation and CVN upper shelf.
III.B.3	Calibration of Temperature Instruments and Charpy Test Machines	No	Paragraph NB-2360 of the ASME B&PV Code Section III was not in existence at the time of purchase of the CGS reactor pressure vessel. However, the requirements of the 1971 edition of the ASME B&PV Section III code, Summer 1971 addenda, were met. For the discussions of the GE interpretations of compliance and NRC acceptance see References 1 and 2. The temperature instruments and Charpy Test Machines calibration data are retained until the next recalibration. This is in accordance with Regulatory Guide 1.88, Revision 2, GE Alternative Position 1.88, and ANSI N45.2.9-1974. Therefore, the instrument calibration data for CGS would not be currently available.
III.B.4	Qualification of Testing Personnel	No	No written procedures were in existence as required by the regulation; however, the individuals were qualified by on-the-job training and past experience. For the discussion of the GE interpretation of compliance and NRC acceptance see References 1 and 2.
III.B.5	Test Results Recording and Certification	Yes	See References 1 and 2.
III.C.1	Test Conditions	No	See III.A, III.B.2 above.

Table 5.3-1

10 CFR 50 Appendix G Matrix (Continued)

Appendix G Paragraph	Topic	Comply Yes/No or N/A	Alternative Actions or Comments
III.C.2	Materials Used to Prepare Test Specimens for Reactor Vessel Beltline	Yes	Compliance on base metal and weld metal tests. Test weld not made on same heat of base plate necessarily.
IV.A.1	Acceptance Standard of Materials	--	
IV.A.2.a	Calculates Stress Intensity Factor	Yes	
IV.A.2.b	Requirements for Nozzles, Flanges, and Shell Region Near Geometric Discontinuities	No	Plus 60°F was added to the RT_{NDT} for the reactor vessel flanges. For feedwater nozzles the results of the BWR/6 analysis was adjusted to CGS RT_{NDT} conditions.
IV.A.2.c	RPV Metal Temperature Requirement When Core is Critical	Yes	Comply with 10 CFR 50 Appendix G.
IV.A.2.d	Minimum Permissible Temperature During Hydro Test	Yes	
IV.A.3	Materials for Piping, Pumps, and Valves	No	Main steam line piping is in compliance. See 5.2.3.3 for discussions on pumps and valves.
IV.A.4	Materials for Bolting and Other Fasteners	Yes	Current toughness requirements for closure head studs are met at +10°F even though testing was done per the 1971 ASME code.
IV.B	Minimum Upper Shelf Energy for RPV Beltline	No	Weld and longitudinal CVN data were taken at -20°F and +10°F only. An estimate of compliance to requirements should be made from the first surveillance capsule results per MTEB 5-2.

Table 5.3-1

10 CFR 50 Appendix G Matrix (Continued)

Appendix G Paragraph	Topic	Comply Yes/No or N/A	Alternative Actions or Comments
IV.B (continued)			Beltline plates were tested with longitudinal CVNs at +10°F only. The minimum values are for Heat C1272-1 (0.15% Cu; 34, 26, 30, 31, 34, 30 ft-lb; 10 and 40% shear at +10°F) and Heat C1273-1 (0.14% Cu; 33, 33, 30, 30, 34, 35 ft-lb; 10% shear at +10°F). Beltline welds were tested with CVNs at 10°F or -20°F only. Lowest weld values are found for Heat 04P046/Lot D217A27A (0.06% Cu; 34, 36, 37, 39, 40 ft-lb; 20 and 30% shear at -20°F). Heat C3L46C/Lot J020A27A (0.02% Cu; 35, 39, 40 ft-lb; 60% shear at +10°F) and Heat 05P018/Lot D211A27A (0.09% Cu; 29, 30, 31, 36, 38 ft-lb; 30 and 40% shear at -20°F). Because of the preceding relatively low test temperatures and Cu contents, it is anticipated that end-of-life upper shelf CVN values would be in excess of 50 ft-lb.
IV.C	Requirements for Annealing when RT_{ndt} > 200	N/A	
V.A	Requirements for Material Surveillance Program	See Table 5.3-8	
V.B	Conditions for Continued Operation	Yes	Requirements for continued operations are covered in Technical Specifications and the Reactor Pressure Vessel Surveillance Program document (WPPSS-ENT-089, Reference 5.3.4-1). See Section 5.3.1.6 for description of the Materials Surveillance Program.
V.C	Alternative if V.B Cannot be Satisfied	N/A	The Surveillance Program demonstrates compliance with Appendix G, Section IV. See Section 5.3.1.6 for description of the Materials Surveillance Program.

Table 5.3-1

10 CFR 50 Appendix G Matrix for (Continued)

Appendix G Paragraph	Topic	Comply Yes/No or N/A	Alternative Actions or Comments
V.D	Requirement for RPV Thermal Annealing if V.C Cannot be Met	N/A	
V.E	Reporting Requirements for V.C and V.D	N/A	

REFERENCES

1. Letter MFN-414-77 from G. G. Sherwood, GE, to Edson G. Case, NRC, dated October 17, 1977.

2. Letter from Robert B. Minoque, NRC, to G. G. Sherwood, GE, dated February 14, 1978.

Table 5.3-2

Plate Material Cross Reference

	Heat	Slab
Ring 21		
PCMK 21-1-1	C1272	1
PCMK 21-1-2	C1273	1
PCMK 21-1-3	C1273	2
PCMK 21-1-4	C1272	2
Ring 22		
PCMK 22-1-1	B5301	1
PCMK 22-1-2	C1336	1
PCMK 22-1-3	C1337	1
PCMK 22-1-4	C1337	2

Table 5.3-3

Weld Material Cross Reference

Weld Identification	Type	Heat	Lot
AB - Girthweld	E8018NM	492L4871	A422B27AF
	RAC01NMM	5P6756	0342
	RAC01NMM	3P4955	0342
	E8018NM	04T931	A423B27AG
Ring 21			
BA	E8018NM	04P046	D217A27A
	E8018NM	07L669	K004A27A
	RAC01NMM	3P4966	1214
BB	E8018NM	04P046	D217A27A
	E8018NM	07L669	K004A27A
	E8018NM	C3L46C	J020A27A
	RAC01NMM	3P4966	1214
	E8018NM	08M365	G128A27A
BC	E8018NM	09L853	A111A27A
	E8018NM	C3L46C	J020A27A
	RAC01NMM	3P4966	1214
BD	E8018NM	C3L46C	J020A27A
	RAC01NMM	3P4966	1214
	E8018NM	04P046	D217A27A
	E8018NM	C3L46C	J020A27A
Ring 22			
BE	RAC01NMM	3P4966	1214
BF	E8018NM	04P046	D217A27A
	E8018NM	05P018	D211A27A
	RAC01NM	3P4966	1214
BG	E8018NM	624063	C228A27A
	E8018NM	624039	D224A27A
	RAC01NMM	3P4966	1214
BH	E8018NM	04P096	D217A27A
	E8018NM	624039	D205A27A
	RAC01NMM	3P4966	1214

Table 5.3-4

Plate Material

	Charpy Impact ft-lb @ +10°F	Charpy Expansion MLE	Drop Weight NDT (°F)	RT_{NDT} (°F)
Ring 21				
PCMK 21-1-1 Heat C1272-1	34, 26, 30/31, 34, 30	30, 34, 24/27, 26, 32	–10	28
PCMK 21-1-2 Heat C1273-1	33, 33, 30/30, 34, 35	30, 31, 27/26, 34, 32	–20	20
PCMK 21-1-3 Heat C1273-2	38, 48, 55/66, 61, 71	44, 39, 34/53, 52, 56	–30	4
PCMK 21-1-4 Heat C1272-2	40, 42, 44/51, 55, 50	32, 36, 38/41, 44, 42	–30	0
Ring 22				
PCMK 22-1-1 Heat B5301-1	64, 62, 66/52, 52, 55	56, 56, 56/45, 44, 44	–30	–20
PCMK 22-1-2 Heat C1336-1	70, 72, 71/60, 44, 66	59, 60, 62/56, 41, 51	–30	–8
PCMK 22-1-3 Heat C1337-1	71, 76, 74/70, 72, 55	61, 60, 60/63, 61, 52	–30	–20
PCMK 22-1-4 Heat C1337-2	62, 72, 82/73, 67, 73	51, 61, 66/52, 59, 61	–50	–20

Table 5.3-5

Weld Material

Type/Heat/Lot/Control	Charpy Impact (ft-lb)	Charpy Expansion MLE	Charpy Test Temperature (°F)	RT_{NDT} (°F)
Girth Weld AB				
E8018NM/492L4871 Lot A422B27AF	78, 82, 105, 93, 81	55, 60, 72, 74, 60	–20[a]	–50
RAC01NMM/5P6756[b] Lot 0342	76, 79, 77, 80, 72	64, 72, 55, 69, 60	+10	–50
RAC01NMM/5P6756[c] Lot 0342	76, 79, 77, 80, 72	64, 72, 55, 69, 60	+10	–50
RAC01NMM/3P4955[b] Lot 0342	49, 63, 47, 49, 64	39, 48, 36, 43, 57	+10	–20
RAC01NMM/3P4955[c] Lot 0342	52, 37, 45, 55, 33	44, 30, 43, 50, 32	+10	–16
E8018NM/04T931 Lot A423B27AG	86, 84, 102, 63, 61	69, 58, 60, 57, 70	–20	–50
Ring 21BA				
E8018NM/04P046 Lot D217A27A	34, 36, 37, 39, 40	23, 28, 24, 20, 24	–20[a]	–48
E8018NM/07L669 Lot K004A27A	50, 50, 54	44, 44, 46	+10[a]	–50
RAC01NMM/3P4966[c] Lot 1214/3482	40, 71, 75, 63, 59	41, 63, 68, 58, 53	+10[a]	–30
RAC01NMM/3P4966[b] Lot 1214/3482	65, 70, 67, 69, 49	60, 60, 63, 55, 44	+10[a]	-48
Ring 21BB				
E8018NM/04P046 Lot D217A27A	34, 36, 37, 39, 40	23, 28, 24, 20, 24	–20[a]	–48
E8018NM/07L669 Lot K004A27A	50, 50, 54	44, 44, 46	+10[a]	–50
E8018NM/C3L46C Lot J020827A	35, 39, 40	34, 39, 39	+10[a]	–20

Table 5.3-5

Weld Material (Continued)

Type/Heat/Lot/Control	Charpy Impact (ft-lb)	Charpy Expansion MLE	Charpy Test Temperature (°F)	RT_{NDT} (°F)
RAC01NMM/3P4966[c] Lot 1214/3482	40, 71, 75, 63, 59	41, 63, 68, 58, 53	+10[a]	–30
RAC01NMM/3P4966[b] Lot 1214/3482	65, 70, 67, 69, 49	60, 60, 63, 55, 44	+10[a]	–48
E8018NM/08M365 Lot G128A27A	49, 50, 51	38, 40, 43	+10[a]	–48
Ring 21BC				
E8018NM/09L853 Lot A111A27A	78, 78, 79	60, 62, 62	+10[a]	–50
E8018NM/C3L46C Lot J020A27A	35, 39, 40	34, 39, 39	+10[a]	–20
RAC01NMM/3P4966[c] Lot 1214/3482	40, 71, 75, 63, 59	41, 63, 68, 58, 53	+10[a]	–30
RAC01NMM/3P4966[b] Lot 1214/3482	65, 70, 67, 69, 49	60, 60, 63, 55, 44	+10[a]	–48
Ring 21BD				
E8018NM/C3L46C Lot J020A27A	35, 39, 40	34, 39, 39	+10[a]	–20
RAC01NMM/3P4966[c] Lot 1214/3482	40, 71, 75, 63, 59	41, 63, 68, 58, 53	+10[a]	–30
RAC01NMM/3P4966[b] Lot 1214/3482	65, 70, 67, 69, 49	60, 60, 63, 55, 44	+10[a]	–48
E8018NM/04P046 Lot D217A27A	34, 36, 37, 39, 40	23, 28, 24, 20, 24	–20[a]	–48
Ring 22BE				
RAC01NMM/3P4966[c] Lot 1214/3481	39, 38, 38, 82, 84	68, 64, 63, 81, 72	+10	–20
RAC01NMM/3P4966[b] Lot 1214/3481	28, 84, 63, 75, 78	18, 62, 57, 51, 57	+10	–6

Table 5.3-5

Weld Material (Continued)

Type/Heat/Lot/Control	Charpy Impact (ft-lb)	Charpy Expansion MLE	Charpy Test Temperature (°F)	RT_{NDT} (°F)
Ring 22BF				
E8018NM/04P046 Lot D217A27A	34, 36, 37, 39, 40	23, 28, 24, 20, 24	–20[a]	–48
E8018NM/05P018 Lot D211A27A	29, 30, 31, 36, 38	26, 26, 31, 33, 35	–20[a]	–38
RAC01NMM/3P4966[c] Lot 1214/3481	39, 38, 38, 82, 84	68, 64, 63, 81, 72	+10	–20
RAC01NMM/3P4966[b] Lot 1214/3481	28, 84, 63, 75, 78	18, 62, 57, 51, 57	+10	–6
Ring 22BG				
E8018NM/624063 Lot C228A27A	37, 40, 51, 57, 70	33, 34, 41, 47, 55	–20[a]	–50
E8018NM/624039 Lot D224A27A	28, 33, 34, 36, 42	29, 32, 33, 34, 42	–20[a]	–36
RAC01NMM/3P4966[c] Lot 1214/3481	39, 38, 38, 82, 84	68, 64, 63, 81, 72	+10	–20
RAC01NMM/3P4966[b] Lot 1214/3481	28, 84, 63, 75, 78	18, 62, 57, 51, 57	+10	–6
Ring 22BH				
E8018NM/04P046 Lot D217A27A	34, 36, 37, 39, 40	23, 28, 24, 20, 24	–20[a]	–48
E8018NM/624039 Lot D205A27A	41, 44, 49, 54, 58	32, 36, 40, 41, 45	–20[a]	–50
RAC01NMM/3P4966[c] Lot 1214/3481	39, 38, 38, 82, 84	68, 64, 63, 81, 72	+10	–20
RAC01NMM/3P4966[b] Lot 1214/3481	28, 84, 63, 75, 78	18, 62, 57, 51, 57	+10	–6

[a] Drop weight NDT not applicable.
[b] Tandem wire process.
[c] Single wire process.

Table 5.3-6

Vessel Beltline Plate

Plate	P	Cu	C	Mn	Si	S	Ni	Mo	V
C1272-1	0.013	0.15	0.23	1.31	0.26	0.02	0.60	0.55	--
C1272-2	0.013	0.15	0.23	1.31	0.26	0.02	0.60	0.55	--
C1273-1	0.014	0.14	0.23	1.28	0.23	0.018	0.60	0.57	--
C1273-2	0.014	0.14	0.23	1.28	0.23	0.018	0.60	0.57	--
B5301-1	0.017	0.13	0.20	1.34	0.23	0.014	0.50	0.52	--
C1336-1	0.017	0.13	0.21	1.36	0.22	0.013	0.50	0.49	--
C1337-1	0.018	0.15	0.22	1.32	0.21	0.013	0.51	0.50	--
C1337-2	0.018	0.15	0.22	1.32	0.21	0.013	0.51	0.50	--

Peak I.D. EOL RPV peak fluence of 1.28E+18 n/cm^2 at 54 EFPY.

Table 5.3-7

Vessel Beltline Weld Material Chemistry[a]

Weld Heat/Control	Cu	C	Mn	Si	S	Ni	Mo	V	P
492L4871[b]	0.03	0.07	1.17	0.32	0.02	0.98	0.51	0.02	0.02
5P6756/0342[c]	0.08[f]	0.063	1.27	0.57	0.011	0.936[f]	0.45	0.006	0.01
5P6756/0342[d]	0.08[f]	0.078	1.24	0.53	0.012	0.936[f]	0.46	0.006	0.01
3P4955/0342[d]	0.027[f]	0.035	1.33	0.56	0.011	0.921[f]	0.52	0.006	0.016
3P4955/0342[c]	0.027[f]	0.054	1.28	0.55	0.010	0.921[f]	0.54	0.007	0.016
04T931[b]	0.03	0.05	1.03	0.28	0.024	1.00	0.53	0.01	0.02
04P046[b]	0.06	0.044	1.04	0.40	0.021	0.90	0.58	0.02	0.009
07L996[b]	0.03	0.05	1.24	0.48	0.016	1.02	0.54	--	0.014
3P4966/3481[d]	0.025[f]	0.074	1.38	0.36	0.013	0.913[f]	0.49	0.006	0.010
3P4966/3481[c]	0.025[f]	0.067	1.39	0.38	0.014	0.913[f]	0.53	0.008	0.011
3P4966/3482[c]	0.025[f]	0.059	1.35	0.38	0.013	0.913[f]	0.50	0.005	0.013
3P4966/3482[d]	0.025[f]	0.077	1.42	0.41	0.013	0.913[f]	0.53	0.005	0.014
C3L46C[b]	0.02	0.063	0.96	0.32	0.017	0.87	0.53	--	0.019
08M365[b]	0.02	0.057	1.23	0.47	0.023	1.10	0.57	--	0.02
09L853[b]	0.03	0.052	1.23	0.46	0.023	0.86	0.51	--	0.018
05P018[b]	0.09	0.057	1.21	0.44	0.021	0.90	0.53	0.01	0.008
624063[b]	0.03	0.041	1.12	0.41	0.018	1.00	0.54	0.01	0.009
624039[b,e]	0.07	0.060	1.11	0.45	0.025	1.01	0.57	0.02	0.015
624039[b,e]	0.10	0.041	1.12	0.45	0.02	0.92	0.53	0.01	0.01

[a] As deposited.
[b] M = Manual Welding Process
[c] S = Single Wire Process
[d] T = Tandem Wire Process
[e] Different lot numbers
[f] GE Hitachi Nuclear Energy, "Pressure-Temperature Curves Report for Energy Northwest Columbia Generating Station 60 Year Plan License Extension," 005N4603, November 2020, (CVI CAL 1012-00,23) Table 4-5.

Table 5.3-8
10 CFR 50 Appendix H Matrix

Appendix H Paragraph	Topic	Comply Yes/No or N/A	Alternative Actions or Comments
I	Introduction	N/A	
II.A	Fluence 10^{17}n/cm^2	Yes	CGS Plant-specific RPV Surveillance Program is replaced by the BWRVIP ISP. See Section 5.3.1.6.
II.B	Standards Requirements (ASTM) for Surveillance	No	Plant-specific Surveillance Program: Noncompliance with ASTM E185-73 in that the surveillance specimens are not necessarily from the limiting beltline material. Specimens are from actual beltline material, however, and can be used to predict behavior of the limiting material. Heat and heat/lot numbers for surveillance specimens were supplied. See Section 5.3.1.6.
II.C.1	Surveillance Specimen Shall be Taken for Locations Alongside the Fracture Test Specimens (Section III.B of Appendix G)	No	Plant-specific Surveillance Program: Noncompliance in that specimens may not have necessarily been taken from alongside specimens required by Section III of Appendix G and transverse CVNs may not be employed. However, representative materials have been used, and RT_{NDT} shift appears to be independent of specimen orientation. See Section 5.3.1.6.
II.C.2	Locations of Surveillance Capsules in RPV	Yes	Code basis is used for attachment of brackets to vessel cladding.
II.C.3.a	Withdrawal Schedule of Capsules, $RT_{NDT} < 100°F$	N/A	See Section 5.3.1.6. Starting RT_{NDT} of limiting material is based on alternative action (see paragraph III.A of Appendix G).
II.C.3.b	Withdrawal Schedule of Capsules, $RT_{NDT} < 200°F$	N/A	
II.C.3.c	Withdrawal Schedule of Capsules, $RT_{NDT} > 200°F$	N/A	

Table 5.3-8

10 CFR 50 Appendix H Matrix (Continued)

Appendix H Paragraph	Topic	Comply Yes/No or N/A	Alternative Actions or Comments
III.A	Fracture Toughness Testing Requirements of Specimens	Yes	Requirements for postirradiation testing of surveillance material are addressed in the BWRVIP ISP implementation plan (Reference 5.3.4-2).
III.B	Method of Determining Adjusted Reference Temperature for Base Metal, HAZ, and Weld Metal	Yes	Method of determining adjusted reference temperatures found in the BWRVIP ISP implementation plan (Reference 5.3.4-2).
IV.A	Reporting Requirements of Test Results	Yes	Reporting requirements are discussed in the BWRVIP ISP implementation plan (Reference 5.3.4-2).
IV.B	Requirement for Dosimetry Measurement	Yes	Dosimetry requirements are discussed in the BWRVIP ISP implementation plan (Reference 5.3.4-2).
IV.C	Reporting Requirements of Pressure/Temperature Limits	Yes	A discussion of the pressure/temperature limits and reporting requirements is found in the BWRVIP implementation plan (Reference 5.3.4-2).

Table 5.3-9

Reactor Vessel Beltline Minimum
Wall Thickness and Diameter

Inside diameter with clad	= 251 in. (minimum)
Wall thickness (ring #22, lower intermediate shell)	= 6.188 in. (minimum)
Wall thickness (ring #21, lower shell)	= 9.5 in. (minimum)
Clad thickness	= 0.1875 in. (nominal) = 0.125 in. (minimum)

Refer to Figure 5.3-2 and CVI 02B13-06,2 Rev. 8 (VPF #3133-001-9) CBI Nuclear Company Drawing No. 1, Rev. 8, "Vessel Outline."

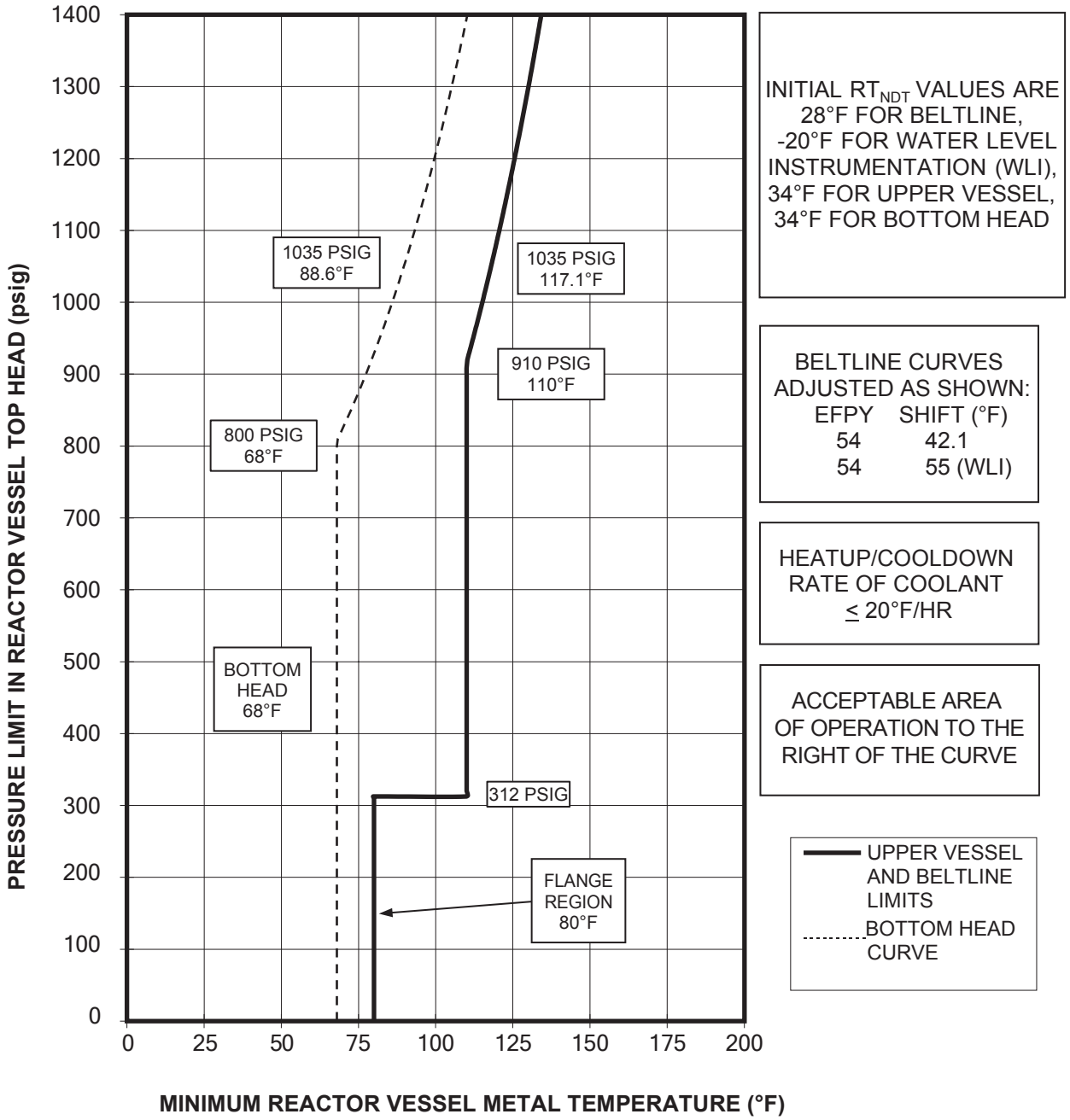

Columbia Generating Station Final Safety Analysis Report	Pressure Temperature Limits Testing Curve A (Inservice Leak and Hydrostatic Testing Curve)		
	Draw. No. 900547.42	Rev. 1	Figure 5.3-1.1

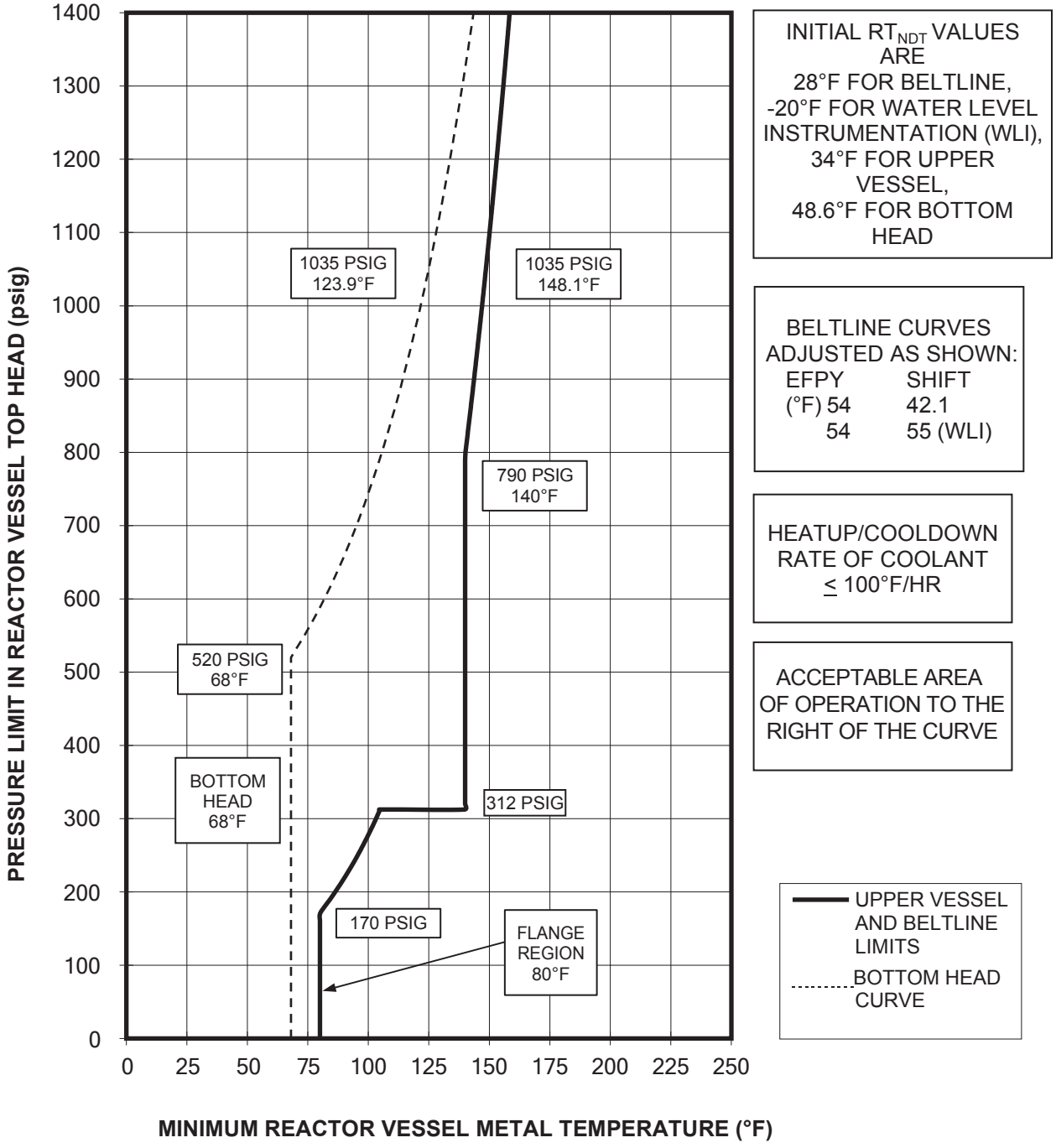

Columbia Generating Station **Final Safety Analysis Report**	**Pressure Temperature Limits** **Curve B** **(Non-Nuclear Heating and Cooldown Curve)**
	Draw. No. 990578.74 | **Rev. 1** | **Figure 5.3-1.2**

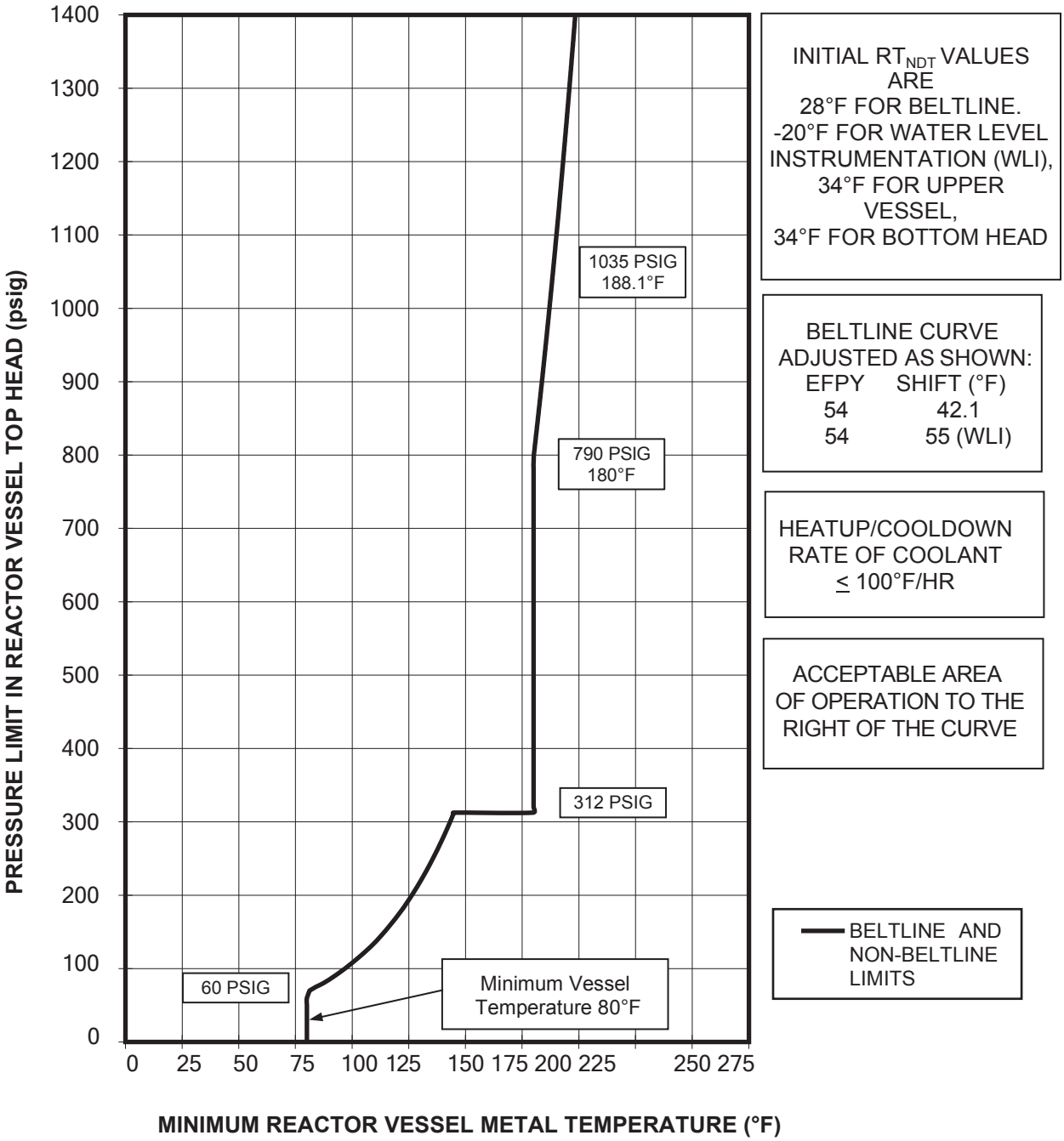

Columbia Generating Station Final Safety Analysis Report	Pressure Temperature Limits Curve C (Nuclear Heating and Cooldown Curve)		
	Draw. No. 900547.43	Rev. 1	Figure 5.3-1.3

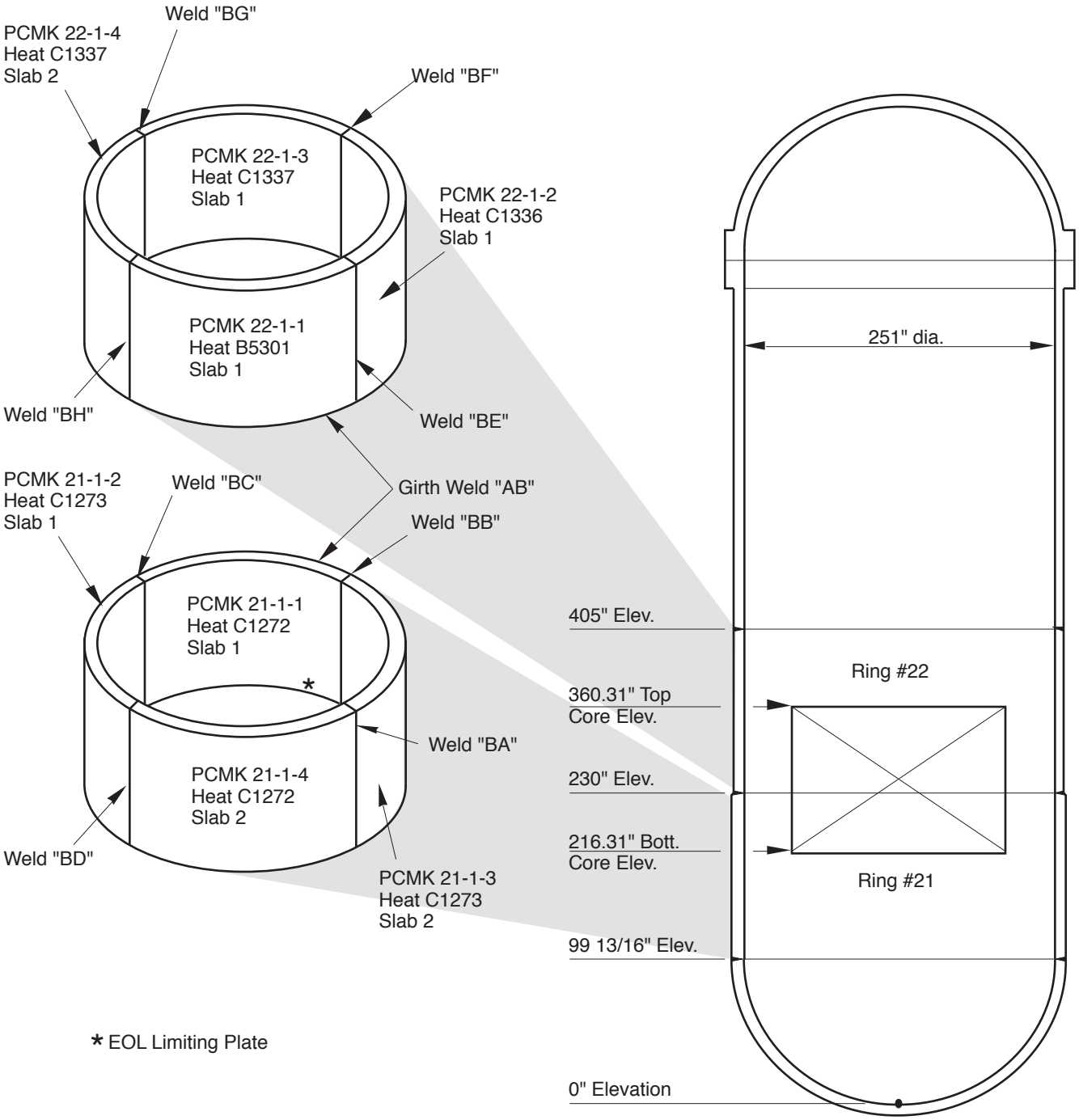

* EOL Limiting Plate

Columbia Generating Station Final Safety Analysis Report	Vessel Beltline Plate and Weld Seam Identification		
	Draw. No. 910402.30	Rev.	Figure 5.3-2

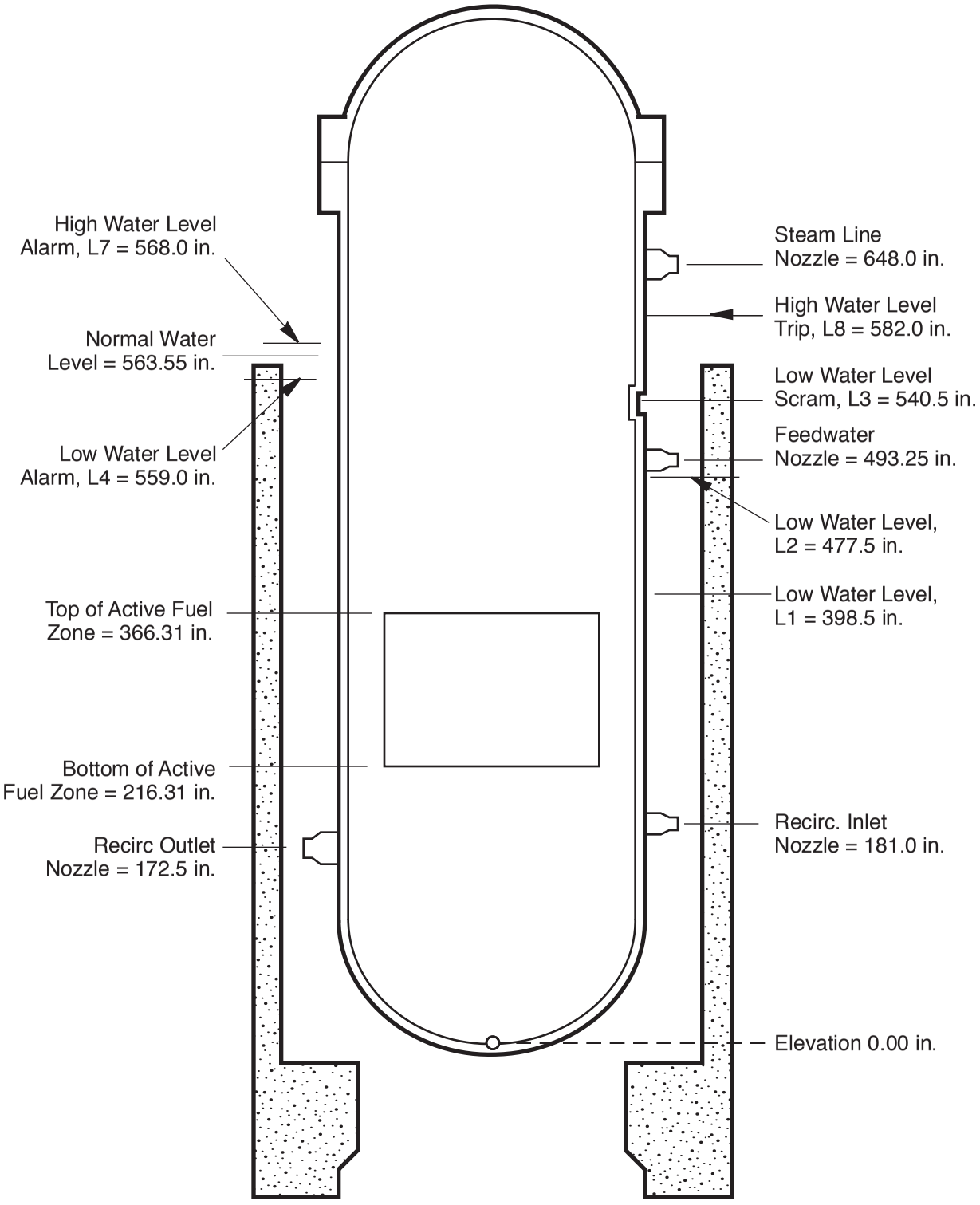

Columbia Generating Station Final Safety Analysis Report	Nominal Reactor Vessel Water Level Trip and Alarm Elevation Settings		
	Draw. No. 960690.53	Rev.	Figure 5.3-3

Form No. 960690

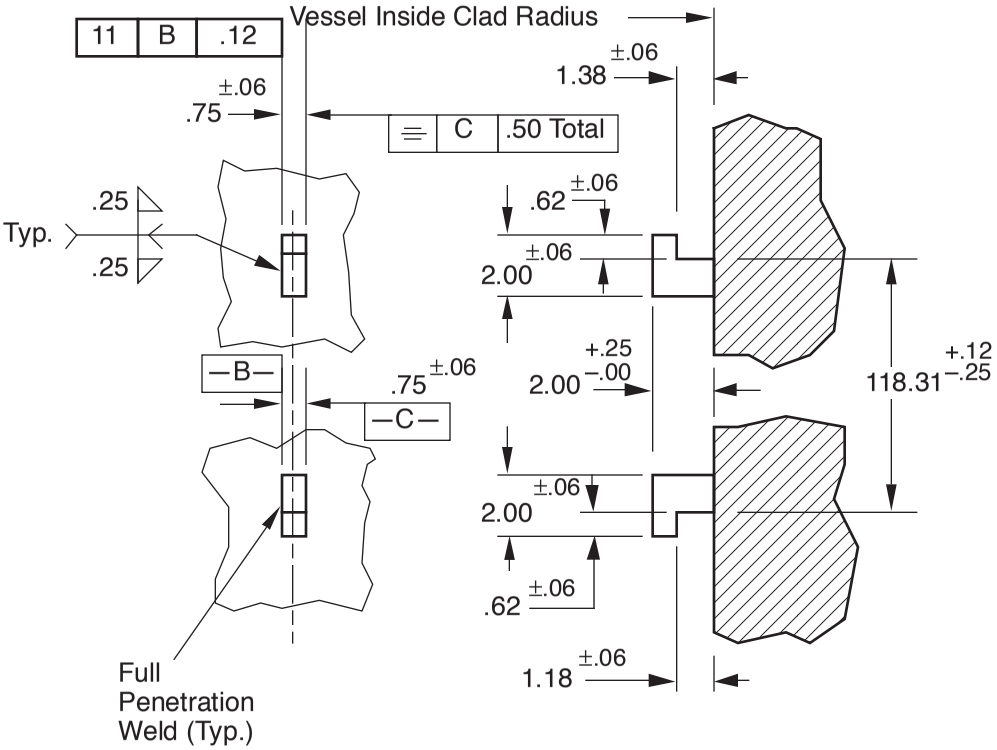

Columbia Generating Station **Final Safety Analysis Report**	**Bracket for Holding Surveillance Capsule**		
	Draw. No. **960690.54**	Rev.	Figure **5.3-4**

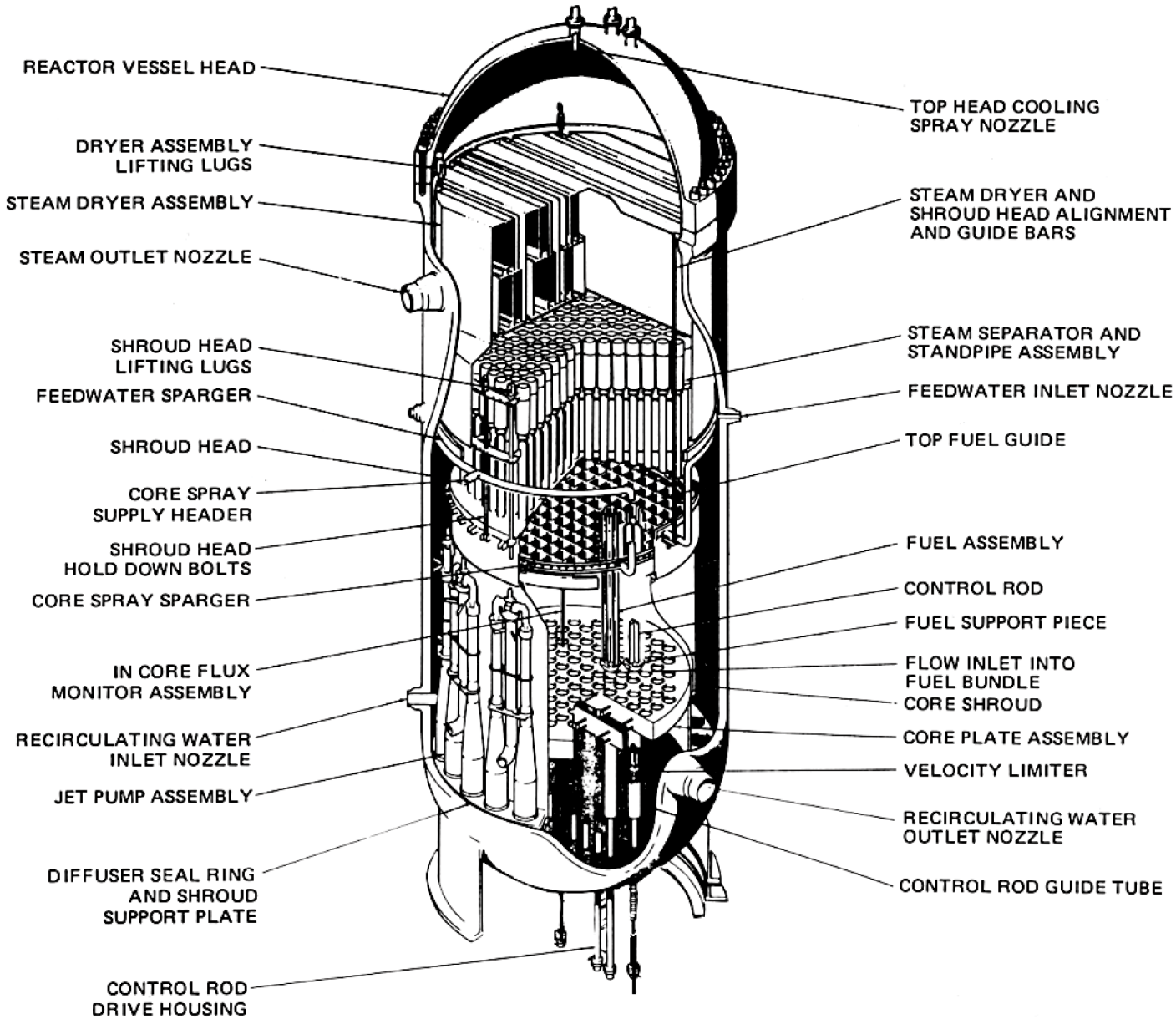

Columbia Generating Station
Final Safety Analysis Report

Reactor Vessel

Draw. No. 020002.44	Rev.	Figure 5.3-5

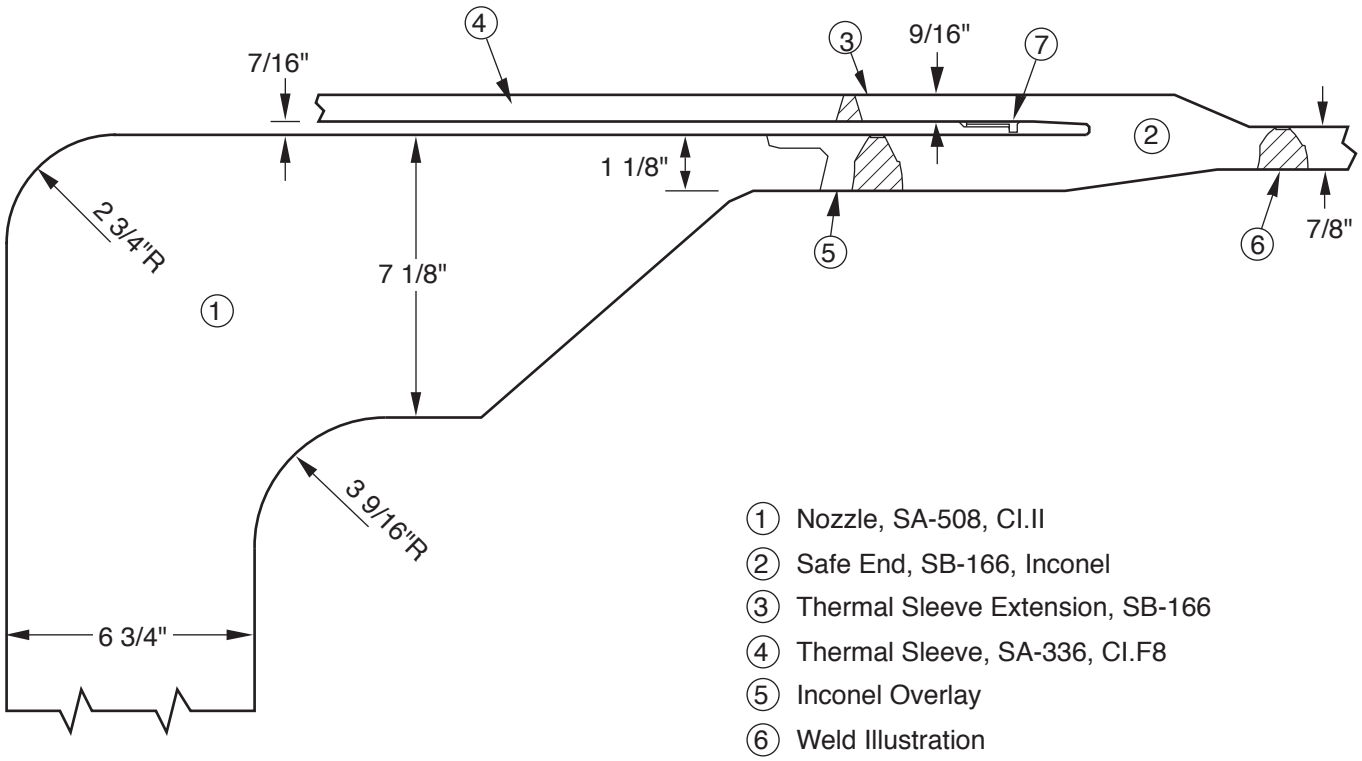

1. Nozzle, SA-508, Cl.II
2. Safe End, SB-166, Inconel
3. Thermal Sleeve Extension, SB-166
4. Thermal Sleeve, SA-336, Cl.F8
5. Inconel Overlay
6. Weld Illustration
7. Back-up Ring, SB-168

Columbia Generating Station
Final Safety Analysis Report

Feedwater Nozzle

Draw. No. 960690.56	Rev.	Figure 5.3-6

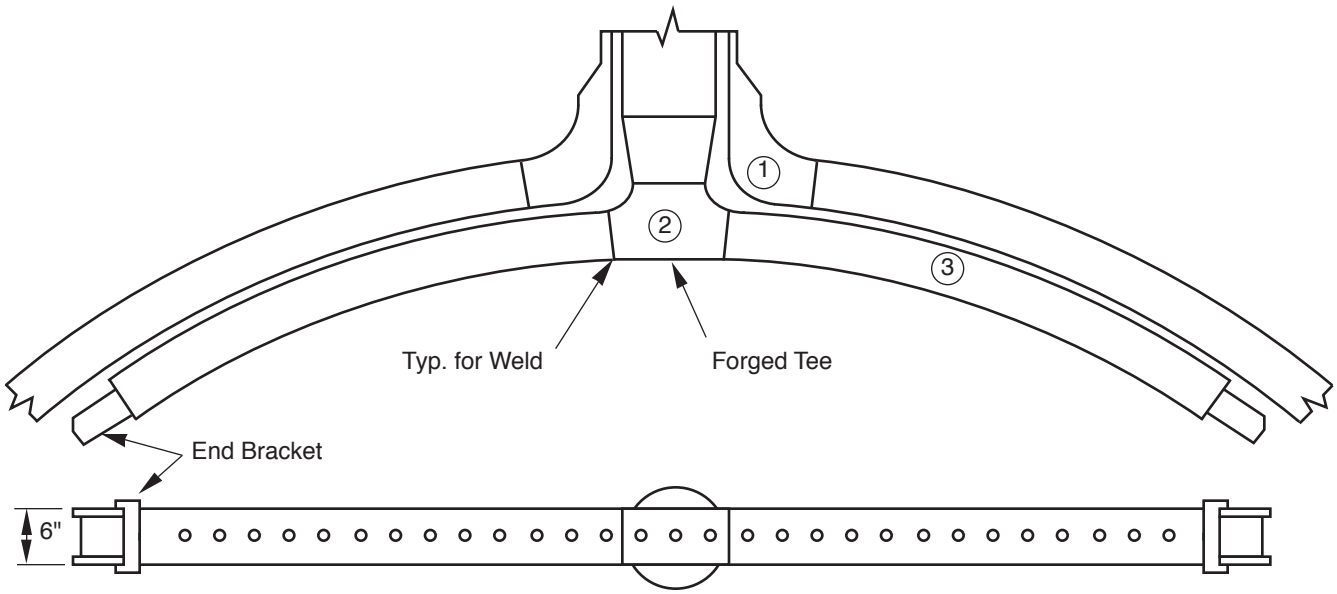

1. Nozzle, SA-508, Cl.II
2. Forged Tee, 304S.S
3. Sparger Header, 304S.S

Columbia Generating Station
Final Safety Analysis Report

Feedwater Sparger

Draw. No. 960690.57	Rev.	Figure 5.3-7

5.4 COMPONENT AND SUBSYSTEM DESIGN

Pumps and valves within the reactor coolant pressure boundary (RCPB) are described in Table 5.4-1.

5.4.1 REACTOR RECIRCULATION PUMPS

5.4.1.1 Safety Design Bases

The reactor recirculation system (RRC) has been designed to meet the following safety design bases:

a. An adequate fuel barrier thermal margin shall be ensured during postulated transients,

b. A failure of piping integrity shall not compromise the ability of the reactor vessel internals to provide a refloodable volume, and

c. The system shall maintain pressure integrity during adverse combinations of loadings and forces occurring during abnormal, accident, and special event conditions.

5.4.1.2 Power Generation Design Bases

The RRC meets the following power generation design bases:

a. The system shall provide sufficient flow to remove heat from the fuel, and

b. System design shall minimize maintenance situations that would require core disassembly and fuel removal.

5.4.1.3 Description

The RRC consists of the two recirculation pump loops external to the reactor vessel. These loops provide the piping path for the driving flow of water to the reactor vessel jet pumps (see Figure 5.4-1). Each external loop contains one high-capacity variable-speed motor-driven recirculation pump. The motor is powered by an adjustable speed drive (ASD). The external loop also contains two motor-operated gate valves (for pump maintenance). Each pump suction line contains a flow measuring system. The recirculation loops are part of the RCPB and are located inside the drywell structure. The jet pumps are reactor vessel internals. Their location and mechanical design are discussed in Section 3.9.5. The important design and performance characteristics of the RRC is shown in Table 5.4-2.

The head, flow, torque, net positive suction head (NPSH), BHP, and efficiency curves are shown in Figures 5.4-2, 5.4-3, and 5.4-4. Instrumentation and control description is provided in Sections 7.6 and 7.7.

The recirculation system piping and normally flooded section of the reactor vessel is periodically coated with a microscopic layer of noble metals. This coating serves to create a catalytic layering of the noble metal platinum to reduce the hydrogen addition injection rate required to achieve a low electrochemical corrosion potential (ECP). The low ECP achieves intergranular stress corrosion cracking (IGSCC) and irradiation assisted stress corrosion cracking (IASCC) protection while minimizing the effects of high dose rates attributed to regular hydrogen injection rates.

The recirculated coolant consists of saturated water from the steam separators and dryers that have been subcooled by incoming feedwater. This water passes down the annulus between the reactor vessel wall and the core shroud. A portion of the coolant flows from the vessel, through the two external recirculation loops, and becomes the driving flow for the jet pumps. Each of the two external recirculation loops discharges high pressure flow into an external manifold from which individual recirculation inlet lines are routed to the jet pump risers within the reactor vessel. The remaining portion of the coolant mixture in the annulus provides the driven flow for the jet pumps. This flow enters the jet pump at suction inlets and is accelerated by the driving flow. The flows, both driving and driven, are mixed in the jet pump throat section and result in partial pressure recovery. The balance of recovery is obtained in the jet pump diffusing suction (see Figure 5.4-5). The adequacy of the total flow to the core is discussed in Section 4.4.

The allowable heatup rate for the recirculation pump casing is the same as the reactor vessel. If one loop is shut down, the idle loop can be kept hot by leaving the loop valves open; this permits the reactor pressure plus the active jet pump head to cause reverse flow in the idle loop. When starting the pump in an idle recirculation loop with the other loop in operation, the operating loop flow will be verified to be less than 50% of rated loop flow within 15 minutes prior to pump start.

Because the removal of the reactor recirculation gate valve internals would require unloading the core, the objective of the valve trim design is to minimize the need for maintenance of the valve internals. The valves are provided with high quality backseats that permit renewal of stem packing while the system is full of water.

The 20-in. motor-operated gate valves provide pump and flow control valve (FCV) isolation during maintenance. The suction valve is capable of closing with up to 50 psi differential, while the discharge valve can close with up to 400 psi differential. Both valves are remote manually operated.

The FCV is blocked open (seized in the full open position). This condition does not affect the pressure integrity or impact the transient duty cycle of the valve or allow the ball to break away from the shaft.

The required NPSH for the recirculation pumps and jet pumps is supplied by the subcooling provided by the feedwater flow. Accurate temperature detectors are provided in the recirculation lines. Steam dome temperature is provided through pressure conversion. The difference between these two readings is a direct measurement of the subcooling. If the subcooling falls below the time-delayed setpoint 10.7°F, the ASD system is reduced to minimum frequency 15 Hz (25% pump speed) on both of the RRC loops. Each loop has independent instrumentation for cavitation protection.

When preparing for hydrostatic tests, the nuclear system temperature must be raised above the vessel nil ductility transition (NDT) temperature limit. The vessel is heated by core decay heat and/or by operating the recirculation pumps.

Connections to the piping on the suction and discharge sides of the pumps provide a means to flush and decontaminate the pump and adjacent piping. The piping low point drain, designed for the connection of temporary piping, is used during flushing or decontamination.

Each recirculation pump is driven by an adjustable speed motor and is equipped with a two-stage mechanical seal cartridge. Each of the two seals in the package is subject to one-half the total pressure being sealed. Each seal is structurally capable of sealing full pressure for limited periods of operation. The two seals can be replaced without removing the motor from the pump. The pump shaft passes through a breakdown bushing in the pump casing to reduce leakage in the event of a gross failure of both shaft seals. The cavity temperature and pressure drop across each individual seal can be monitored.

Each recirculation pump motor is a vertical, solid-shaft, totally enclosed, air-water-cooled, induction motor. The combined rotating inertias of the recirculation pump and motor provide a slow coastdown of flow following loss of ASD-supplied power to the drive motors so that they are adequately cooled during the transient. This inertia requirement is met without a flywheel.

The ASD can vary the discharge flow of the pump proportionally to a reactor operator remote manually adjusted demand signal. The RRC GE-FANUC digital control scheme is described in Sections 7.6 and 7.7. The recirculation loop flow rate can be varied, within the expected flow range, in response to changes to system demand.

The design objective for the recirculation system equipment is to provide units that will not require removal from the system for rework or overhaul. Pump casing and valve bodies are designed for a 40-year life and are welded to the pipe.

The application of the Columbia AMPs verifies that the identified structures, systems, and components will continue to provide their identified intended function(s) during the period of extended operation.

The pump drive motor, impeller, and wear rings are designed for as long a life as is practical. Pump mechanical seal parts and the valve packing have life expectancies which afford convenient replacement during the refueling outages.

The ASD system selected to drive the recirculation pump induction motor is a dual channel system. Two ASDs are provided, capable of 11,200 hp at 66 Hz per RRC loop. If one channel fails, the RRC loop flow capability must be reduced to the capability of a single channel ASD. The dual channel ASD system provides for high availability of the ASD system. The ASD system is a solid-state frequency converter with overall high availability. Sections 7.6 and 7.7 provide more detail of the system design.

The recirculation system piping is designed and constructed to meet the requirements of the applicable ASME and ANSI codes.

The RRC pressure boundary equipment is designed as Seismic Category I equipment. The pump is assumed to be filled with water for the analysis. Snubbers located at the top of the motor and at the bottom of the pump casing are designed to resist the horizontal reactions.

The recirculation piping, valves, and pumps are supported by hangers to avoid the use of piping expansion loops that would be required if the pumps were anchored. In addition, the recirculation loops are provided with a system of restraints designed so that reaction forces associated with any split or circumferential break do not jeopardize drywell integrity. This restraint system provides adequate clearance for normal thermal expansion movement of the loop. The criteria for the protection against the dynamic effects associated with a loss-of-coolant accident (LOCA) are contained in Section 3.6.

The recirculation system piping, valves, and pump casings are covered with thermal insulation having a total maximum heat transfer rate of 65 Btu/hr-ft^2 with the system at rated operating conditions. This heat loss includes losses through joints, laps, and other openings that may occur in normal application.

The insulation is primarily the all-metal reflective type. It is prefabricated into components for field installation. Removable insulation is provided at various locations to permit periodic inspection of the equipment.

The residual heat removal (RHR) system can use the recirculation loop jet pumps to provide circulation through the reactor core. Operating restrictions limit RHR operation to regions where jet pump cavitation does not occur.

5.4.1.3.1 Recirculation System Cavitation Consideration

Cavitation Coefficients

The recirculation pump, jet pump, and FCV were tested to determine their cavitation coefficients so that prolonged operation in cavitating regimes can be avoided.

Equipment Damage Provisions

Cavitation interlocks are provided for the recirculation pump and jet pumps; since cavitation produces material damage after long-term operation and the damage potential decreases with an increase in water temperature, short periods of cavitation during a transient or accident are not a concern. However, long-term operation that might occur is of sufficient concern to call for inspections during the next refueling outage. Consequently, to avoid the need for such inspections, automatic interlocks are installed. Class 1E equipment is not necessary for power generation design requirements, so the automatic interlocks are non-Class 1E.

The consequences of cavitation would require inspection of the affected component and repair or replacement if the inspection showed unacceptable damage. Consequently, cavitation could call for increased scheduled outage time for inspection/repair affecting plant availability power generation design goals.

The ASD and its GE-FANUC digital control system is a non-safety-related system. The ASD and control system have alarm and protective systems and are provided with on-line video diagnostic displays at the main control room operating benchboard.

5.4.1.4 Safety Evaluation

Reactor recirculation system malfunctions that pose threats of damage to the fuel barrier are described and evaluated in Section 15.3. It is shown in Section 15.3 that none of the malfunctions result in significant fuel damage. The RRC has sufficient flow coastdown characteristics to maintain fuel thermal margins during abnormal operational transients.

The core flooding capability of a jet pump design plant is discussed in detail in the emergency core cooling system (ECCS) document submitted to the NRC (Reference 5.4-1). The ability to reflood the boiling water reactor (BWR) core to the top of the jet pumps is shown schematically in Figure 5.4-6 and is discussed in Reference 5.4-1.

Piping and pump design pressures for the RRC are based on peak steam pressure in the reactor dome, appropriate pump head allowances, and the elevation head above the lowest point in the recirculation loop. Piping and related equipment pressure parts are chosen in accordance with applicable codes. Use of the listed code design criteria ensures that a system designed, built,

and operated within design limits has an extremely low probability of failure caused by any known failure mechanism.

Purchase specifications require that the recirculation pumps first critical speed shall not be less than 130% of operating speed. Calculation submittal was required and approved.

Purchase specifications require that integrity of the pump case be maintained through all transients and that the pump remain operable through all normal and upset transients. The design of the motor bearings are required to be such that dynamic load capability at rated operating conditions is not exceeded during the safe shutdown earthquake (SSE). Calculation submittal was required of the vendor and has been received and approved by GE.

Pump overspeed occurs during the course of a LOCA due to blowdown through the broken loop's pump. Design studies determined that the overspeed was not sufficient to cause destruction of the motor; consequently no pump overspeed protection provision was made.

A failure modes effects analysis (FMEA) was performed on the block valves. In addition, an analysis was made to determine the effect of block valve closure on recirculation pump coastdown. The analysis postulates that coincident with a recirculation pump trip, the block valves begin to close. It was concluded that any closure time greater than 1 minute will have no effect on coastdown times. The consequences of an inadvertent closure without a coincident pump trip is covered in the FMEA.

5.4.1.5 Inspection and Testing

Quality control methods were used during fabrication and assembly of the RRC to ensure that design specifications were met. Inspection and testing is carried out as described in Chapter 3. The reactor coolant system was thoroughly cleaned and flushed before fuel was loaded initially.

During the preoperational test program, the RRC was hydrostatically tested at 125% reactor vessel design pressure. Preoperational tests on the RRC also included checking operation of the pumps, flow control system, and gate valves, and are discussed in Chapter 14.

During the startup test program, horizontal and vertical motions of the RRC piping and equipment were observed as described in Section 5.4.14.

5.4.2 STEAM GENERATORS (Pressurized Water Reactor)

This is not applicable to BWR plants.

5.4.3 REACTOR COOLANT PIPING

The RCPB piping is discussed in Sections 3.9.3.1 and 5.4.1. The recirculation loops are shown in Figures 5.4-1 and 5.4-7. The design characteristics are presented in Table 5.4-2. Avoidance of stress corrosion cracking is discussed in Section 5.2.3.

5.4.4 MAIN STEAM LINE FLOW RESTRICTORS

5.4.4.1 Safety Design Bases

The main steam line flow restrictors were designed to

a. Limit the rate of vessel blowdown to 200 percent of the normal rated flow in the event of a steam line break outside containment. This limits the reactor depressurization rate to a value which will ensure that the steam dryer and other reactor internal structures remain in place.

b. Withstand the maximum pressure difference expected across the restrictor, following complete severance of a main steam line,

c. Limit the amount of radiological release outside of the drywell prior to main steam isolation valve (MSIV) closure, and

d. Provide trip signals for MSIV closure.

5.4.4.2 Description

A main steam line flow restrictor (see Figure 5.4-8) is provided for each of the four main steam lines. The restrictor is a complete assembly welded into the main steam line. It is located between the last main steam line safety/relief valve (SRV) and the inboard MSIV.

The restrictor limits the coolant blowdown rate from the reactor vessel in the event a main steam line break occurs outside the containment. The restrictor assembly consists of a venturi-type nozzle insert welded, in accordance with applicable code requirements, into the main steam line. The flow restrictor is designed and fabricated in accordance with the ASME "Fluid Meters," 6th edition, 1977.

The flow restrictor has no moving parts. Its mechanical structure can withstand the velocities and forces associated with a main steam line break. The maximum differential pressure is conservatively assumed to be 1375 psi, the reactor vessel ASME Code limit pressure.

The ratio of venturi throat diameter to steam line inside diameter of approximately 0.55 results in a maximum pressure differential (unrecovered pressure) of about 10 psig at 100% of rated

flow. This design limits the steam flow in a severed line to less than 200% rated flow, yet it results in negligible increase in steam moisture content during normal operation. The restrictor is also used to measure steam flow to initiate closure of the MSIVs when the steam flow exceeds preselected operational limits.

5.4.4.3 Safety Evaluation

A postulated guillotine break of one of the four main steam lines outside the containment results in mass loss from both ends of the break. The flow from the upstream side is initially limited by the flow restrictor upstream of the inboard isolation valve. Flow from the downstream side is initially limited by the total area of the flow restrictors in the three unbroken lines. Subsequent closure of the MSIVs further limits the flow when the valve area becomes less than the limiter area and finally terminates the mass loss when full closure is reached.

Analysis of the main steam break accident outside containment demonstrates that the radioactive materials released to the environs results in calculated doses that are in compliance with 10 CFR 50.67 and Regulatory Guide 1.183 dose limits.

Tests on a scale model determined final design and performance characteristics of the flow restrictor. The characteristics include maximum flow rate of the restrictor corresponding to the accident conditions, unrecoverable losses under normal plant operating conditions, and discharge moisture level. The tests showed that flow restriction at critical throat velocities is stable and predictable.

The steam flow restrictor is exposed to steam of 0.10% to 0.20% moisture flowing at velocities approximately 150 ft/sec (steam piping I.D.) to 600 ft/sec (steam restrictor throat). The cast austenitic stainless steel (ASME SA351, or ASTM A351, Type CF8) was selected for the steam flow restrictor material because it has excellent resistance to erosion-corrosion in a high velocity steam atmosphere. The excellent performance of stainless steel in high velocity steam appears to be due to its resistance to corrosion. A protective surface film forms on the stainless steel which prevents any surface attack and this film is not removed by the steam.

Hardness has no significant effect on erosion-corrosion. For example, hardened carbon steel or alloy steel will erode rapidly in applications where soft stainless steel is unaffected.

Surface finish has a minor effect on erosion-corrosion. Experience shows that a machined or a ground surface is sufficiently smooth and that no detrimental erosion will occur.

5.4.4.4 Inspection and Testing

Because the flow restrictor forms a permanent part of the main steam line piping and has no moving components, no testing program is planned. Only very slow erosion will occur with

time, and such a slight enlargement will have no safety significance. Stainless steel resistance to corrosion has been substantiated by turbine inspections at the Dresden Unit 1 facility, which have revealed no noticeable effects from erosion on the stainless steel nozzle partitions. The Dresden inlet velocities are about 300 ft/sec and the exit velocities are 600 to 900 ft/sec. However, calculations show that, even if the erosion rates are as high as 0.003 in. per year, after 60 years of operation the increase in restrictor choked flow rate would not exceed 5%. The impact on calculated accident radiological releases would be minimal.

5.4.5 MAIN STEAM LINE ISOLATION SYSTEM

The MSIV leakage control system has been deactivated.

5.4.5.1 Safety Design Bases

The MSIVs, individually or collectively, shall

a. Close the main steam lines within the time established by design-basis accident analysis to limit the release of reactor coolant,

b. Close the main steam lines slowly enough that simultaneous closure of all steam lines will not induce transients that exceed the nuclear system design limits,

c. Close the main steam line when required despite single failure in either valve or in the associated controls, to provide a high level of reliability for the safety function,

d. Use separate energy sources as the motive force to close independently the redundant isolation valves in the individual steam lines,

e. Use local stored energy (compressed air and/or springs) to close at least one isolation valve in each steam pipe line without relying on the continuity of any variety of electrical power to furnish the motive force to achieve closure,

f. Have capability to close the steam lines, either during or after seismic loadings, to ensure isolation if the nuclear system is breached, and

g. Have capability for testing during normal operating conditions to demonstrate that the valves will function.

5.4.5.2 Description

Two isolation valves are welded in a horizontal run of each of the four main steam pipes; one valve is as close as possible to the inside of the drywell and the other is just outside the primary containment.

Figure 5.4-9 shows an MSIV. Each is a 26-in. Y-pattern, globe valve. Rated steam flow rate through each valve is 3.85 x 10^6 lb/hr. The main disc or poppet is attached to the lower end of the stem. Normal steam flow tends to close the valve, and higher inlet pressure tends to hold the valve closed. The bottom end of the valve stem closes a small pressure balancing hole in the poppet. When the hole is open, it acts as a pilot valve to relieve differential pressure forces on the poppet. Valve stem travel is sufficient to give flow areas past the wide open poppet approximately equal to the seat port area. The poppet travels approximately 90% of the valve stem travel to close the main disc and approximately the last 10% of travel to close the pilot hole. The air cylinder can open the poppet with a maximum differential pressure of 200 psi across the isolation valve in a direction that tends to hold the valve closed.

A 45-degree angle permits the inlet and outlet passages to be streamlined; this minimizes pressure drop during normal steam flow and helps prevent debris blockage. The pressure drop at 105% of rated flow is 7 psi maximum. The valve stem penetrates the valve bonnet through a stuffing box that has Grafoil packing. To help prevent leakage through the stem packing, the poppet backseats when the valve is fully open.

Attached to the upper end of the stem is an air cylinder that opens and closes the valve and a hydraulic dashpot that controls its speed. The speed is adjusted by a valve in the hydraulic return line bypassing the dashpot piston. Valve closing time is adjustable to between 3 and 10 sec.

The air cylinder is supported on the valve bonnet by actuator support and spring guide shafts. Helical springs around the spring guide shafts maintain the valve in the closed position if air pressure is not available.

The valve is operated by pneumatic pressure and by the action of compressed springs. The control unit is attached to the air cylinder. This unit contains three types of control valves that open and close the main valve and exercise it at slow speed. Remote manual switches in the control room enable the operator to operate the valves.

Operating air is supplied to the outboard valves from the plant air system and to the inboard valves from the containment instrument system (nitrogen). An air accumulator between the control valve and a check valve provides backup operating air. The outboard MSIVs will close on spring force or air cylinder pressure; the inboard valves require spring force and air pressure to close.

Each valve is designed to accommodate saturated steam at plant operating conditions, with a moisture content of approximately 0.25%, an oxygen content of 30 ppm, and a hydrogen content of 4 ppm. The valves are furnished in conformance with a design pressure and temperature rating in excess of plant operating conditions to accommodate plant overpressure conditions.

In the worst case if the main steam line should rupture downstream of the valve, steam flow would quickly increase to 200% of rated flow. Further increase is prevented by the venturi flow restrictor inside the containment.

During approximately the first 75% of closing, the valve has little effect on flow reduction because the flow is choked by the venturi restrictor. After the valve is approximately 75% closed, flow is reduced as a function of the valve area versus travel characteristic.

The design objective for the valve is a minimum of 40-years service at the specified operating conditions. Operating cycles (excluding routine exercise cycles) are estimated to be 100 cycles per year during the first year and 50 cycles per year thereafter.

In addition to minimum wall thickness required by applicable codes, a corrosion allowance of 0.120-in. minimum is added to provide for 40 years of service.

The application of the Columbia AMPs verifies that the identified structures, systems, and components will continue to provide their identified intended function(s) during the period of extended operation.

Design specification ambient conditions for normal plant operation are 135°F normal temperature, 150°F maximum temperature, 100% humidity, in a radiation field of 15 rad/hr gamma and 25 rad/hr neutron plus gamma, continuous for design life. The inside valves are not continuously exposed to maximum conditions, particularly during reactor shutdown, and valves outside the primary containment and shielding are in ambient conditions that are considerably less severe.

The MSIVs are designed to close under accident environmental conditions of 340°F for 1 hr at drywell design pressure. In addition, they are designed to remain closed under the following postaccident environment conditions:

a. 340°F for an additional 2 hr at drywell design pressure of 45 psig maximum,
b. 320°F for an additional 3 hr at 45 psig maximum,
c. 250°F for an additional 24 hr at 25 psig maximum, and
d. 200°F during the next 100 days at 20 psig maximum.

To resist sufficiently the response motion from the SSE, the main steam line valve installations are designed as Seismic Category I equipment. The valve assembly is manufactured to withstand the SSE forces applied at the mass center of the extended mass of the valve operator,

assuming the cylinder/spring operator is cantilevered from the valve body and the valve is located in a horizontal run of pipe. The stresses caused by horizontal and vertical seismic forces are assumed to act simultaneously. The stresses in the actuator supports caused by seismic loads are combined with the stresses caused by other live and dead loads, including the operating loads. The allowable stress for this combination of loads is based on the allowable stress set forth in applicable codes. The parts of the MSIVs that constitute a process fluid pressure boundary are designed, fabricated, inspected, and tested as required by the ASME Code Section III.

5.4.5.3 Safety Evaluation

The analysis of a complete, sudden steam line break outside the containment is described in Chapter 15, "Accident Analyses." The shortest closing time (approximately 3 sec) of the MSIVs is also shown in Chapter 15, to be satisfactory. The switches on the valves initiate reactor scram when specific conditions (extent of valve closure, number of pipe lines included, and reactor power level) are exceeded (see Section 7.2.1.1).

The ability of this 45-degree, Y-design globe valve to close in a few seconds after a steam line break, under conditions of high pressure differentials and fluid flows with fluid mixtures ranging from mostly steam to mostly water, has been demonstrated in a series of dynamic tests. A full-size, 20-in. valve was tested in a range of steam-water blowdown conditions simulating postulated accident conditions (Reference 5.4-2).

The following specified hydrostatic, leakage, and stroking tests, as a minimum, were performed by the valve manufacturer in shop tests:

a. To verify valve capability to close at settings between 3 and 10 sec,* each valve was tested at rated pressure (1000 psig) and no flow. The valve was stroked several times, and the closing time recorded. The valve was closed by spring only and by the combination of air cylinder and springs. The closing time is slightly greater when closure is by springs only;

b. Leakage was measured with the valve seated and backseated. The specified maximum seat leakage, using cold water at design pressure, was 2 cm^3/hr/in. of nominal valve size. In addition, an air seat leakage test was conducted using 50 psi pressure upstream. Maximum permissible leakage was 0.1 scfh/in. of nominal valve size. There was no visible leakage from the stem packing at hydrostatic test pressure. The valve stem was operated a minimum of three times from the closed position to the open position, and the packing leakage was zero by visual examination;

* Response time for full closure is set prior to plant operation for 3 sec minimum, 5 sec maximum.

c. Each valve was hydrostatically tested in accordance with the requirements of the applicable edition and addenda of the ASME Code. During valve fabrication, extensive nondestructive tests and examinations were conducted. Tests included radiographic, liquid penetrant, or magnetic particle examinations of castings, forgings, welds, hardfacings, and bolts; and

d. The spring guides and guiding of the spring seat member on support shafts and rigid attachment of the seat member ensure correct alignment of the actuating components. Binding of the valve poppet in the internal guides is prevented by making the poppet in the form of a cylinder longer than its diameter and by applying stem force near the bottom of the poppet.

After the valves were installed in the nuclear system, each valve was tested as discussed in Chapter 14.

Two isolation valves provide redundancy in each steam line so either can perform the isolation function, and either can be tested for leakage after the other is closed. The inside valve, the outside valve, and their respective control systems are separated physically.

Electrical equipment that is associated with the isolation valves and operates in an accident environment is limited to the wiring, solenoid valves, and position switches on the isolation valves. The expected pressure and temperature transients following an accident are discussed in Chapter 15.

5.4.5.4 Inspection and Testing

The MSIVs can be functionally tested for operability during plant operation and refueling outage. The test provisions are listed below. During refueling outage the MSIVs can be functionally tested, leak tested, and visually inspected.

The MSIVs can be tested and exercised individually to the 90% open position, because the valves still pass rated steam flow when 90% open.

The MSIVs can also be tested and exercised individually to the fully closed position if reactor power is reduced sufficiently to avoid scram from reactor overpressure or high flow through the steam line flow restrictors.

Leakage from the valve stem packing will become suspect during reactor operation from measurements of leakage into the drywell, or from observation or similar measurements in the steam tunnel.

The leak rate through the pipe line valve seats (pilot and poppet seats) can be measured accurately during shutdown by the procedure described in the following:

a. With the reactor at approximately 125°F and normal water level and decay heat being removed by the RHR system in the shutdown cooling mode, all MSIVs are closed utilizing both spring force and air pressure on the operating cylinder;

b. Air from the instrument air system is introduced between the isolation valves at 25 to 26 psig. A pressure decay test or an air makeup test is used to determine combined inboard and outboard isolation valve seat leakage;

c. If combined inboard and outboard isolation valve seat leakage is above the allowed leakage for a single isolation valve, the outboard isolation valve is then tested for seat leakage;

d. To leak-test the outboard isolation valves, the reactor vessel side of the inboard valves is pressurized to approximately the same pressure as the test pressure between the inboard and outboard valves using nitrogen gas or a hydrostatic head. A pressure decay or makeup leak test is then performed on the area between the isolation valves. This ensures essentially zero leakage through the inboard valves with test results indicating outboard valve seat leakage. The volume between the closed valves is accurately known. Corrections for temperature variation during the test period are made to obtain the required accuracy; and

e. At each refueling outage, the MSIVs are slow closed to verify the stem packing is not too tight. Also, the inboard MSIV containment instrument air (CIA) supply pressure boundary from the accumulator check valve to the actuator is verified to not exceed the allowable leak rate.

Such a test and leakage measurement program ensure that the valves are operating correctly and that any leakage trend is detected.

During prestartup tests following an extensive shutdown, the valves will receive the same pressure boundary leakage or hydro tests (approximately 1000 psi) that are imposed in the primary system.

5.4.6 REACTOR CORE ISOLATION COOLING SYSTEM

5.4.6.1 Design Bases

The reactor core isolation cooling (RCIC) system initiates the discharge of a specified constant flow into the reactor vessel over a specified pressure range within a 30-sec time interval. The RCIC water discharge into the reactor vessel varies between a temperature of 40°F up to and

including a temperature of 140°F. The mixture of the RCIC water and the hot steam does the following:

a. Quenches the steam,

b. Removes reactor residual heat by reducing the heat level (enthalpy) due to the temperature differential between the steam and water, and

c. Replenishes reactor vessel inventory.

The RCIC system uses an electrical power source of high reliability, which permits operation with either onsite power or offsite power.

The steam supply to the RCIC turbine is automatically isolated on detection of abnormal conditions in the RCIC system or in RCIC equipment areas. See Section 7.4.1.1.2.

The RCIC system is neither an ECCS nor an engineered safety feature (ESF) system; however, it is included in these sections because of its similar functions. No credit (simulation) is taken in the accident analysis of Chapter 6 or 15 for its operation. However, the system is designed to initiate during plant transients that cause low reactor water level. The design bases with respect to General Design Criteria 34, 55, 56, and 57 are provided in Chapter 3. Reactor core isolation cooling containment isolation valve arrangements are described in Section 6.2.

The RCIC system as noted in Table 3.2-1 is designed commensurate with the safety importance of the system and its equipment. Each component was individually tested to confirm compliance with system requirements. The system as a whole was tested during both the startup and preoperational phases of the plant to set a base mark for system reliability. To confirm that the system maintains this mark, functional and operability testing is performed at predetermined intervals throughout the life of the plant.

In addition to the automatic operational features, provisions have been included for remote-manual startup, operation, and shutdown of the RCIC system, provided initiation or shutdown signals have not been actuated for startup and operation.

The RCIC system is physically located in a different quadrant of the reactor building and uses different divisional power (and separate electrical routings) than the HPCS system. The system operates for the time intervals and the environmental conditions specified in Section 3.11.

5.4.6.2 System Design

5.4.6.2.1 General

5.4.6.2.1.1 Description. The RCIC system consists of a turbine, pump, piping, valves, accessories, and instrumentation designed to ensure that sufficient reactor water inventory is maintained in the reactor vessel to permit adequate core cooling. This prevents reactor fuel overheating should the vessel be isolated and accompanied by loss-of-coolant flow from the reactor feedwater system.

Following a reactor shutdown, steam generation will continue at a reduced rate due to the core fission product decay heat. At this time the turbine bypass system will divert the steam to the main condenser, and the feedwater system will supply the makeup water required to maintain reactor vessel inventory.

In the event the reactor vessel is isolated and the feedwater supply is unavailable, relief valves are provided to automatically (or remote manually) maintain vessel pressure within desirable limits. The water level in the reactor vessel will drop due to continued steam generation by decay heat.

On reaching a predetermined low level, the RCIC system is initiated automatically. The RCIC turbine is driven with a portion of the decay heat steam from the reactor and exhausts to the suppression pool. The turbine-driven pump takes suction from the condensate storage tank (CST) during normal modes of operation and injects into the reactor vessel. Condensate storage tank freeze protection is discussed in Section 9.2.6. Since the CST is a covered tank, the water supply is not affected by dust storms. If the water supply from the CST becomes exhausted there is an automatic switchover to the suppression pool as the water source for the RCIC pump. This automatic switchover feature for RCIC consists of two Class 1E level switches mounted on a standpipe in the pump suction line. This standpipe is located on the condensate supply line inside the reactor building at the reactor building/service building interface.

The standpipe is open ended and is used to indicate either a low water level condition in the CST or a loss-of-suction supply from the CST. The standpipe is designed, fabricated, and installed to Seismic Category I, Quality Class I, and ASME Section III, Class 2 standards.

The piping from the reactor building/service building interface to the RCIC system is Seismic Category I; each circumferential buttweld has been radiographically examined per ASME Section III, NC-5230, and a chemical analysis has been performed on all piping materials and as-deposited weld materials.

The inline suction reserve from the CST has sufficient volume to maintain the minimum required NPSH for the RCIC pump plus an approximate four-ft margin while the switchover

occurs, thus ensuring a water supply for continuous operation of the RCIC system. The CST switchover level of 448 ft 3 in. provides an additional submergence of 2 ft (above the top of the CST outlet pipe), which is more than adequate to preclude vortex formation in the CST since less than 6 in. of additional submergence for vortex prevention is required for RCIC.

The available NPSH for worst-case operating conditions (i.e., 625 gpm rated flow, maximum water temperature) was calculated for the RCIC pump suction from the suppression pool and the CST. Using the conservative water temperature of 140°F, the NPSH available from the suppression pool is approximately 60 ft. For the CST, using 100°F water, the NPSH available is 48 ft. In both cases, the NPSH available is greater than the required NPSH of 20 ft indicated in Figure 5.4-10 for the RCIC turbine high speed setpoint of 4500 rpm.

The RCIC suction line from the suppression pool has also been evaluated for vortex formation. The RCIC system has adequate NPSH and will not vortex under the conditions it would be expected to operate.

During RCIC operation, the suppression pool acts as the heat sink for steam generated by reactor decay heat. This will result in a rise in pool water temperature. Heat exchangers in the RHR system are used to maintain pool water temperature within acceptable limits by cooling the pool water directly.

The RCIC turbine discharges into a 10-in. exhaust pipe (see Figure 5.4-11), which has been installed as a sparger to prevent flow-induced oscillations due to steam bubble formation and collapse in the suppression pool. Also, a vacuum breaker system has been installed close to the RCIC turbine exhaust line suppression pool penetration to avoid siphoning water from the suppression pool into the exhaust line as steam in the line condenses during and after turbine operation. The vacuum breaker line runs from the suppression pool air volume to the RCIC exhaust line through two normally open motor-operated gate valves and two swing check valves arranged to allow air flow into the exhaust line and to preclude steam flow to the suppression pool air volume. Condensate buildup in the turbine exhaust line is removed by a drain pot in the low point of the line near the turbine exhaust connection. The condensate collected in the drain pot drains to the barometric condenser.

5.4.6.2.1.2 Diagrams. The following diagrams are included for the RCIC systems:

a. A schematic “Piping and Instrumentation Diagram” (Figures 5.4-11) shows all components, piping, points where interface system and subsystems tie together and instrumentation and controls associated with subsystem and component actuation,

b. A schematic “Process Diagram” (Figure 5.4-12) shows temperature, pressures, and flows for RCIC operation and system process data hydraulic requirements, and

c. RCIC turbine and pump performance curves; Constant Pump Flow Figure 5.4-10 and Constant Pump Speed Figure 5.4-13.

5.4.6.2.1.3 Interlocks. The following defines the various electrical interlocks:

a. There are four key-locked valves, RCIC-V-63 (F063), RCIC-V-8 (F008), RCIC-V-68 (F068), and RCIC-V-69 (F069), and two key-locked resets, the "isolation resets;"

b. RCIC-V-31 (F031) limit switch activates when fully open and closes RCIC-V-10 (F010), RCIC-V-22 (F022), and RCIC-V-59 (F059);

c. RCIC-V-68 (F068) limit switch activates when fully open and clears RCIC-V-45 (F045) permissive so RCIC-V-45 (F045) can open;

d. RCIC-V-45 (F045) limit switch activates when RCIC-V-45 (F045) is not fully closed and energizes 15-sec time delay for low pump suction pressure trip and also initiates startup ramp function. This ramp resets each time RCIC-V-45 (F045) is closed;

e. RCIC-V-45 (F045) limits switch activates when fully closed and permits RCIC-V-4 (F004), RCIC-V-5 (F005), RCIC-V-25 (F025), and RCIC-V-26 (F026) to open and closes RCIC-V-13 (F013), RCIC-V-46 (F046) and RCIC-V-19 (F019). RCIC-V-13 (F013) and RCIC-V-46 (F046) auto open on initiation signal if RCIC-V-45 (F045) and RCIC-V-1 (F001) are open;

f. The turbine trip throttle valve RCIC-V-1 limit switch activates when fully closed and closes RCIC-V-13 (F013), RCIC-V-46 (F046) and RCIC-V-19 (F019);

g. The combined pressure switches at reactor low pressure and high drywell pressure when activated closes RCIC-V-110 and 113 (F080 and F086);

h. RCIC high turbine exhaust pressure, low pump suction pressure, low discharge header pressure[(1)], or an isolation signal actuates and closes the turbine trip throttle valve. When signal is cleared, the trip throttle valve must be reset from control room;

i. 125% overspeed trips both the mechanical trip at the turbine and the trip throttle valve. The former is reset at the turbine and then the later is reset in the control room;

NOTE: [(1)] This equipment protection feature has been disabled by placing the RCIC-RMS-PIS1 switch in the OVERRIDE position.

j. Valves RCIC-V-8 (F008), RCIC-V-63 (F063), and RCIC-V-76 (F076) automatically isolate on low reactor pressure, high turbine exhaust line pressure, high ambient temperature in RCIC equipment areas (leak detection) and high turbine steam supply flow rate (>300% - break detection). A setpoint of 300% for break isolation provides sufficient operating margin to prevent inadvertent isolations due to startup transients and yet is low enough to detect large pipe breaks. Small breaks are detected by the leak detection system. Steam condensing supply valve RCIC-V-64 (F064) has been lock closed as a part of the steam condensing mode deactivation. Note, the key-locked switches for RCIC-V-8 (F008) and RCIC-V-63 (F063) do not prevent automatic isolation of these valves. The key-locked switches are provided to prevent inadvertent manual isolation of the RCIC steam supply during system operation;

k. An initiation signal opens RCIC-V-10 (F010) if closed, RCIC-V-45 (F045), and RCIC-V-46 (F046) if RCIC-V-1 and RCIC-V-45 (F045) are not closed. The initiation signal also starts barometric condenser vacuum pump; and closes RCIC-V-22 (F022) and RCIC-V-59 (F059) if open;

l. The combined signal of low flow plus high discharge pressure opens and with increased flow closes RCIC-V-19 (F019). Also see items e and f above;

m. The signal of in-line reserve tank low water level opens valve RCIC-V-31 (F031);

n. High reactor water level closes RCIC-V-45 (F045); and

o. Main turbine trips if RCIC-V-13 and RCIC-V-45 are open.

5.4.6.2.2 Equipment and Component Description

5.4.6.2.2.1 Design Conditions. Operating parameters for the components of the RCIC systems defined in the following are shown in Figure 5.4-12.

a. One 100% capacity turbine and accessories,

b. One 100% capacity pump assembly and accessories, and

c. Piping, valves, and instrumentation for

1. Steam supply to the turbine,

2. Turbine exhaust to the suppression pool,

3. Makeup supply from the CST to the pump suction,

4. Makeup supply from the suppression pool to the pump suction, and

5. Pump discharge to the head cooling spray nozzle, including a test line to the CST, a minimum flow bypass line to the suppression pool, and a coolant water supply to accessory equipment.

5.4.6.2.2.2 Design Parameters. Design parameter for the RCIC system components are listed below. See Figure 5.4-11 for cross reference of component numbers listed below:

a. RCIC pump operation RCIC-P-1 (C001) (Reference to Figures 5.4-11 and 5.4-13)

Flow rate	Injection flow - 600 gpm Lube oil cooling water flow - 16-25 gpm Total pump discharge - 625 gpm (includes no margin for pump wear)
Water temperature range	40°F to 140°F
NPSH	21 ft minimum
Developed head	3016 ft @ 1225 psia reactor pressure 610 ft @ 165 psia reactor pressure
BHP, not to exceed	761 HP @ 3016 ft developed head 130 HP @ 610 ft developed head

Design pressure	1500 psia
Design temperature	40°F to 140°F

b.

RCIC turbine operation RCIC-DT-1 (C002)	HP condition	LP condition
Reactor pressure (saturation temperature)	1225 psia	165 psia
Steam inlet pressure	1210 psia	150 psia
Turbine exhaust press	15 to 25 psia	15 to 25 psia

Design inlet pressure	1265 psia + saturated temperature
Design exhaust pressure	165 psia + saturated temperature

c.	RCIC orifice sizing	
	Coolant loop orifice RCIC-RO-9 (D009)	Sized with piping arrangement to ensure maximum pressure of 75 psia at the lube oil cooler inlet and a minimum pressure of 45 psia at the spray nozzles at the barometric condenser
	Minimum flow orifice RCIC-RO-5 (D005)	Sized with piping arrangement to ensure minimum flow of 100 gpm with RCIC-V-19 (MO-F019) fully open
	Test return orifice RCIC-RO-6 (D006)	Sized with piping arrangement to simulate pump discharge pressure required when the RCIC system is injecting design flow with the reactor vessel pressure at 165 psia
	Leak-off orifices RCIC-RO-8 and RCIC-RO-10 (D008 and D010)	Sized for 1/8-in. diameter minimum, 3/16-in. diameter maximum

d.	Valve operation requirements	
	NOTE: Differential pressures listed in the following were obtained from the RCIC system design specification data sheet and are listed for information. Detailed differential pressure requirements are contained in engineering calculations.	
	Steam supply valve RCIC-V-45 (F045)	Open and/or close against full steam pressure
	Pump discharge valve RCIC-V-13 (F013)	Open and/or close against full pump discharge pressure and open in thermal over-pressure conditions in the RCIC discharge header

Pump minimum flow bypass valve RCIC-V-19 (F019)	Open and/or close against full pump discharge pressure
Steam supply isolation valves RCIC-V-08/RCIC-V-63 (F008)	Open and/or close against full differential pressure of 1210 psi
Turbine lube oil/cooling water pressure control valve RCIC-PCV-15 (F015)	Capable of maintaining constant downstream pressure of 75 psia through lube oil cooler
Pump discharge header relief valve (RCIC-RV-3)	1500 psig relief setting; less than 1 gpm required capacity; the maximum allowable discharge is less than 20 gpm
Pump suction relief valve RCIC-RV-17 (F017)	122 psig relief setting; 20 gpm required capacity
Cooling water relief valve (RCIC-RV-19T)	Sized to prevent overpressurization of piping valves and equipment in the turbine lube oil coolant loop in the event of failure of pressure control valve RCIC-PCV-15 (F015). Set pressure is 99 psig; required flow is 33.1 gpm
Pump test return valve RCIC-V-22 (F022)	Qualified to open, close, and throttle against full pump discharge pressure
Pump test return valve RCIC-V-59 (F059)	Qualified to close (not open) against full pump discharge pressure
Relief valve barometric condenser vacuum tank RCIC-RV-33 (F033)	Relief valve is capable of retaining 10 in. of mercury vacuum at 140°F ambient, with a set pressure of 6 psig; required flow is 20 gpm
Pump suction valve suppression pool RCIC-V-31 (F031)	Located as close as practical to the primary containment
Pump suction valve condensate storage tank RCIC-V-10 (F010)	Open and/or close against full suction head from the condensate storage tank

Main pump discharge check valve RCIC-V-65/RCIC-V-66 (F065/F066)	System test mode bypasses this valve. Its functional capability is demonstrated separately
Warm-up line isolation valve RCIC-V-76 (F076)	Valve will open and/or close against full steam pressure
Vacuum breaker isolation valves RCIC-V-110 (F080) and RCIC-V-113 (F086)	Valves will open and/or close against turbine exhaust pressure

e. Rupture disc

Assemblies RCIC-RD-1/RCIC-RD-2 (D001/D002)	Utilized for turbine casing protection, includes a mated vacuum support to prevent rupture disc reversing under vacuum conditions Rupture pressure 150 psig ± 10 psig Flow capacity 60,000 lb/hr @ 165 psig

f. Condensate storage requirements

Total reserve storage for reactor pressure valve makeup is 135,000 gal.

g. Piping RCIC water temperature

The maximum water temperature range for continuous system operation will not exceed 140°F. However, due to potential short-term operation at higher temperatures, piping design is based on 170°F.

h. Turbine exhaust vertical reaction force

Unbalanced pressure due to opening and discharge under the suppression pool water level is 20 psi.

i. Ambient conditions

	Temperature	Relative Humidity
Normal plant operations	60°F to 100°F	95%
Isolation conditions	148°F	100%

j. Water leg pump

Design pressure	125 psig
Design temperature	170°F

k. Barometric condenser

Design pressure	50 psig
Design temperature	650°F

l. Vacuum tank

Design pressure	15 psig
Design temperature	212°F

m. Condensate pump

Design pressure	50 psig
Design temperature	650°F
Capacity	23 gpm @ 10 in. Hg vac., 70°F 50 psig discharge

n. Turbine and steam supply drain pots

Design pressure	1250 psig
Design temperature	575°F

o. Turbine governing and trip throttle valves

Design pressure	1250 psig
Design temperature	575°F

p. Pump suction strainers in the suppression pool

The suction strainers have been procured to the following specifications:

Primary service rating: ANSI 1501-1

Quality Class I

Seismic Category I

Cleanliness Class B

Applicable Code:	Strainer materials and fabrication meets ASME Section III, Class 2 requirements. The "N" stamp is not be applied since the strainers cannot be hydrostatically tested.
Materials:	Strainer body is stainless steel 304 or 316, or engineer approved equal, suitable for submergence in high quality water during a 40-year lifetime.
Quantity:	2
Diameter:	13.5 in.
Length:	5.25 in.
Rated flow:	300 gpm (per strainer)

The strainers are cylindrical, as shown in Figure 5.4-14. Strainer hole diameter is 0.09375 in. Strainers are attached to ANSI 150# RF Flanges.

Head loss is limited to 4 ft of water assuming the strainers are 50% clogged and the water temperature is 220°F.

The application of the Columbia AMPs verifies that the identified structures, systems, and components will continue to provide their identified intended function(s) during the period of extended operation.

5.4.6.2.2.3 Overpressure Protection. Referring to Figure 5.4-11, four RCIC pipe lines have a low design pressure and, therefore, require relief devices or some other basis for addressing overpressure protection.

The design pressure of the other major pipe lines is equal to the vessel design pressure and subject to the normal overpressure protection system. In addition, the RCIC discharge header has a relief valve, RCIC-RV-3, to protect against thermal overpressurization when the system is in standby mode, isolated from the reactor.

Below are the overpressure protection bases for the low pressure piping lines.

a. RCIC pump suction line

A relief valve [RCIC-RV-17 (F017)] is located on the pump suction line in Figure 5.4-11 to accommodate any potential leakage through the isolation valves [RCIC-V-13 (F013) and RCIC-V-66 (F066)]. A high pump suction pressure alarm is provided in the control room.

b. RCIC turbine exhaust line

This line is normally vented to the suppression pool and is not subject to reactor pressure during normal operation. Rupture discs RCIC-RD-1 (D001) and RCIC-RD-2 (D002), as shown in Figure 5.4-11, are installed on this line to prevent exceeding piping design pressure should the exhaust line isolation valve RCIC-V-68 (F068) be closed when the RCIC turbine is operating. The RCIC system will automatically isolate if the rupture discs were to blow open.

c. Portions of the RCIC minimum flow line downstream of RCIC-V-19 (F019)

This line is normally vented to the suppression pool and is separated from reactor pressure by the pump discharge isolation valves [RCIC-V-13, RCIC-V-65, and RCIC-V-66 (F013, F065, and F066)], pump discharge check valve RCIC-V-90, and one additional normally closed isolation valve in the minimum flow line [RCIC-V-19 (F019)] as shown in Figure 5.4-11.

d. Portions of the RCIC cooling water line downstream of RCIC-PCV-15 (F015)

In the standby condition this line is separated from reactor pressure by the pump discharge valves [RCIC-V-13, RCIC-V-65, and RCIC-V-66 (F013, F065 and F066)], pump discharge check valve RCIC-V-90, and one additional normally closed shut-off valve in the cooling water line [RCIC-V-46 (F046)] as shown in Figure 5.4-11. During system operation a relief valve [RCIC-RV-19T (F018)] is provided to prevent overpressurizing piping, valves, and equipment in the coolant loop in the event of failure of pressure control valve RCIC-PCV-15 (F015) as shown in Figure 5.4-11.

5.4.6.2.3 Applicable Codes and Classifications

The RCIC system components within the drywell up to and including the outer isolation valve are designed in accordance with ASME Code Section III, Class 1, Nuclear Power Plant Components. Safety-related portions of the RCIC system are Seismic Category 1.

The RCIC system component classifications and those for the condensate storage system are given in Table 3.2-1.

5.4.6.2.4 System Reliability Considerations

To ensure that the RCIC will operate when necessary, the power supply for the system is taken from immediately available energy sources of high reliability. Added assurance is given by the capability for periodic testing during station operation. Evaluation of reliability of the instrumentation for the RCIC shows that no failure of a single initiating sensor either prevents or falsely starts the system.

To ensure RCIC availability for the operational events noted previously, the following are considered in the system design.

a. The RCIC and HPCS are located in different quadrants of the reactor building. Piping runs are separated and the water delivered from each system enters the reactor vessel via different nozzles.

b. Prime mover independence is achieved by using a steam turbine to drive the RCIC and an electric motor-driven pump for the HPCS system.

c. The RCIC and HPCS control independence is secured by using different battery systems to provide control power to each system for system operation. Separate detection initiation logic is used for each system.

d. Both systems are designed to meet appropriate safety and quality class requirements. Environment in the equipment rooms is maintained by separate auxiliary systems.

e. A design flow functional test of the RCIC is performed during plant operation by taking suction from the CST and discharging through the full flow test return line back to the CST. The discharge valve to the head-spray line remains closed during the test, and reactor operation is undisturbed. All components of the RCIC system are capable of individual functional testing during normal plant operation. Control system design provides automatic return from test to operating mode if system initiation is required. The three exceptions are as follows:

1. The auto/manual station on the flow controller. This feature is required for operator flexibility during system operation.

2. Steam inboard/outboard isolation valves. Closure of either or both of these valves requires operator action to properly sequence their opening. An alarm sounds when either of these valves leaves the fully open position.

3. Bypassed or other deliberately rendered inoperable parts of the system are automatically indicated in the control room.

f. Periodic inspections and maintenance of the turbine-pump unit are conducted in accordance with manufacturer's instructions. Valve position indication and instrumentation alarms are displayed in the control room.

g. Specific operating procedures relieve the possibility of thermal shock or water hammer to the steam line, valve seals, and discs. Key lock switches are provided for positive administrative control of valve position. Operating procedures require throttling open the outboard isolation valve RCIC-V-8 to remove any condensate trapped between the isolation valves, warming up the steam line by throttling open the warmup valve RCIC-V-76 located on a pipe line bypassing the inboard isolation valve, and then opening the inboard isolation valve RCIC-V-63. All the condensate is removed from the steam supply line by a drain pot located at the lowest point. An alarm sounds when any of these valves leaves the fully open position.

h. Emergency procedures address the operation of RCIC during a station blackout (SBO) event. The RCIC keepfill pump, RCIC-P-3, is powered by a Class 1E ac source, and will be unavailable during an SBO. Upon loss of ac power, the operator manually initiates RCIC. RCIC may be used during an SBO event by maintaining the RCIC discharge header continuously pressurized. The system can be operated in this manner without its keepfill function.

5.4.6.2.5 System Operation

5.4.6.2.5.1 Automatic Operation. Automatic startup or restart (after level 8 shutdown) of the RCIC system due to an initiation signal from reactor low water level requires no operator action. To permit this automatic operation, Technical Specifications operability requirements ensure that all necessary components are available to perform their required functions. In addition, the following are periodically verified:

a. The flow controller has the correct flow setpoint and is in automatic mode;

b. Each RCIC manual, power-operated, and automatic valve in the flow path that is not locked, sealed, or otherwise secured in position, is in the correct position; and

c. The RCIC system piping is filled with water from the pump discharge valve to the injection valve.

The turbine is equipped with a mechanical overspeed trip. The mechanical overspeed trip must be reset out of the control room at the turbine itself. Once the mechanical overspeed trip is reset, the trip throttle valve can be reset.

RCIC System Operation and Shutdown:

During extended periods of operation and when the normal water level is again reached, the HPCS system may be manually tripped and the RCIC system flow controller may be adjusted and switched to manual operation. This prevents unnecessary cycling of the two systems. The RCIC flow to the vessel is controlled by adjusting flow to the amount necessary to maintain vessel level. Subsequent starts of RCIC will occur automatically if the water level decreases to the low level initiation point (Level 2) following a high level shutdown (Level 8). Should RCIC flow be inadequate, HPCS flow will automatically initiate.

RCIC flow may be directed away from the vessel by diverting the pump discharge to the CST. This is accomplished by closing injection valve RCIC-V-13 and opening the test return valves (RCIC-V-22 and 59). The system is returned to injection mode by closing RCIC-V-59 or RCIC-V-22 and then opening RCIC-V-13. This mode of operation will not be used during events where an unacceptable source term is identified in primary containment. Diverting RCIC flow to the CST is not a safety-related function nor does it affect the ability of RCIC to initiate during plant transients. The system automatically switches to injection mode if the water level decreases to the low level initiation point (Level 2).

When RCIC operation is no longer required, the RCIC system is manually tripped and returned to standby conditions.

5.4.6.2.5.2 Test Loop Operation. This operating mode (described in Section 5.4.6.2.4) is conducted by manual operation of the system.

5.4.6.2.5.3 Steam Condensing (Hot Standby) Operation. The steam condensing mode of RHR for Columbia Generating Station has been deactivated. However, the major pieces of equipment are installed with the exception of the steam supply relief valves and are shown on the RCIC and RHR piping and instrumentation diagrams (P&IDs) (Figures 5.4-11 and 5.4-15, respectively). Deletion of this mode of operation for RCIC and RHR will not adversely affect either system's capability to bring the reactor to cold shutdown.

5.4.6.2.5.4 Manual Actions. The RCIC system will automatically initiate and inject into the reactor when the reactor water level drops to a low level (L2, -50 in.). No manual actions are required to operate the system. However, control room operators can manually initiate the system prior to reaching the low level.

5.4.6.2.5.5 Reactor Core Isolation Cooling Discharge Line Fill System. See Section 6.3.2.2.5. The description in this section is also applicable to the RCIC line fill system.

5.4.6.3 Performance Evaluation

The RCIC system makeup capacity is sufficient to avoid the need for ECCS for normal shutdowns and shutdowns resulting from anticipated operational occurrences.

5.4.6.4 Preoperational Testing

The preoperational and initial startup test program for the RCIC system is presented in Chapter 14. Regulatory Guide 1.68 compliance is described in Section 1.8.

5.4.6.5 Safety Interfaces

The balance-of-plant/GE nuclear steam supply system safety interfaces for the RCIC system are (a) preferred water supply from the CST, (b) all associated wire, cable, piping, sensors, and valves that lie outside the nuclear steam supply system scope of supply, and (c) air supply for testable check and solenoid-actuated valve(s).

5.4.7 RESIDUAL HEAT REMOVAL SYSTEM

5.4.7.1 Design Bases

The RHR system is comprised of three independent loops. Each loop contains its own motor-driven pump, piping, valves, instrumentation, and controls. Each loop has a suction source from the suppression pool and is capable of discharging water to the reactor vessel via a separate nozzle, or back to the suppression pool via a separate suppression pool return line. In addition, the A and B loops have heat exchangers which are cooled by standby service water. Loops A and B can also take suction from the RRC suction and can discharge into the reactor recirculation discharge or to the suppression pool and drywell spray spargers. Spool-piece interties are available to permit the RHR heat exchangers to be used to supplement the cooling capacity of the fuel pool cooling (FPC) system (see Section 9.1.3 for details). A spool piece intertie was also used to provide a preoperational flushing path for the low-pressure core spray (LPCS). The A and B loops also have connections to the RCIC steam line. However, these are not used because the steam condensing mode has been eliminated.

5.4.7.1.1 Functional Design Basis

The RHR system is designed to restore and maintain the coolant inventory in the reactor vessel and to provide primary system decay heat removal following reactor shutdown for both normal and postaccident conditions. The primary design operating modes associated with performing these functions are briefly described as follows:

a. Low-pressure coolant injection (LPCI) mode - The RHR system automatically initiates into this mode and pumps suppression pool water into separate lines and core flooder nozzles for injection into the core region of the reactor vessel following a LOCA. The system's LPCI mode operates in conjunction with the other ECCS to provide adequate core cooling for all design basis LOCA conditions.

The functional design bases for the LPCI mode is to pump a total of 7450 gpm of water per loop using the separate pump loops from the suppression pool into the core region of the vessel when there is a 26 psi differential between reactor pressure and the pressure of the suppression pool air volume. Injection flow commences at 225 psid vessel pressure above drywell pressure.

The initiating signals are vessel level 1, 32 in. above the active core or drywell pressure equal to 2.0 psig. The pumps will attain rated speed in 27 sec and injection valves fully open in 46 sec.

These original LPCI mode performance capabilities bound the power uprate conditions and ensure adequate core cooling can be provided following a LOCA at uprated power conditions;

b. Suppression pool cooling (SPC) and containment spray cooling (CSC) modes - The RHR system's SPC and CSC modes provide heat removal from the suppression pool and containment by pumping suppression pool water through the system's heat exchangers and discharging the water either directly back to the suppression pool (i.e., in the SPC mode) or discharging the water to the wetwell and drywell spray spargers (i.e., in the CSC mode) where the water is then returned, by drainage, back to the suppression pool. These modes of operation are designed to provide cooling to maintain containment and suppression pool temperatures and pressures following major transients.

Suppression pool cooling is manually initiated by the operator; however, at least one RHR loop is placed in the SPC mode to maintain suppression pool temperature $\leq$110°F. The drywell spray function removes radioactive fission products from the containment atmosphere during a LOCA and is manually initiated within 15 minutes after the event occurs;

c. Shutdown cooling mode - The RHR system's normal shutdown cooling mode removes reactor core decay and sensible heat from the primary reactor system to permit refueling and servicing. This heat removal function is initiated manually after the reactor pressure has been reduced to less than 48 psig (295°F) by discharge of steam to the main condenser. This mode of operation provides the capability to cool down the reactor under controlled conditions with minimal availability impact. Refer to Section 5.4.7.3.1 for shutdown cooling time to reach 212°F;

d. Alternate shutdown cooling mode - The RHR system's alternate shutdown cooling mode is utilized during normal plant operation and design basis events when the normal shutdown cooling mode is not available to remove reactor core decay and sensible heat. This heat removal function is safety related, initiated manually and pumps suppression pool water into the core and allows the water to return to the suppression pool through the SRVs. The design objective of this mode (as established by Regulatory Guide 1.139) is to reach cold shutdown within 36 hrs and to meet the requirements of GDC 34;

e. Fuel pool cooling mode - During normal plant shutdown, when the reactor vessel head has been removed, the RHR system is designed to be capable of being aligned to assist the FPC and cleanup system in maintaining the fuel pool temperature within acceptable limits. In this mode the system is designed to cool water drawn from the fuel pool by passing it through an RHR system heat exchanger and then discharge the water back to the fuel pool;

f. Minimum flow bypass mode - The RHR system minimum flow bypass mode is designed to provide cooling for the RHR pumps during a small break LOCA that does not result in rapid reactor vessel depressurization to below the RHR system shutoff discharge pressure. This mode cools the pumps by providing a pump flow return line to the suppression pool that allows sufficient pump cooling flow to return to the pool until flow in the main discharge line is sufficient to provide adequate pump cooling. When flow in the main discharge lines is sufficient for cooling of the pumps, motor-operated valves in the minimum flow bypass line to the suppression pool automatically close so that all of the system's flow is directed into the main discharge lines;

g. Standby mode - During normal power operation the RHR system is required to be available for the LPCI mode in the event a LOCA occurs. The system is normally maintained in the standby mode. In this mode the system is aligned with the pumps' suction from the suppression pool and all other valves aligned so that only the injection valves are required to open and the RHR pumps started for LPCI flow to be delivered to the reactor following depressurization.

Until adequate flow is established, the RHR pumps are cooled automatically by flow through the minimum flow valves;

h. Reactor steam condensing mode - The reactor steam condensing mode has been deactivated and will no longer be utilized for CGS. No credit has been taken for the steam condensing mode in any safety analysis; and

i. The potential for exceeding the 100°F/hr cooldown limit during the cooldown mode is minimized by precautions and limitations in the appropriate operating procedures.

5.4.7.1.2 Design Basis for Isolation of Residual Heat Removal System from Reactor Coolant System

Interlocks are provided to inhibit shutdown cooling mode alignment whenever reactor pressure is above the design pressure of the low pressure portions of the RHR system (approximately 135 psig).

The low pressure portions of the RHR system are isolated from full reactor pressure whenever the primary system pressure is above the RHR system design pressure. The minimum pressure above which LPCI protection is required is below the design pressure of the low pressure portions of the RHR system. These interlocks also provide protection of the low pressure portions of the RHR system. These interlocks can be reset when pressure has been reduced to approximately 135 psig. The LPCI injection valves are interlocked to prevent opening when reactor pressure is above approximately 460 psig, which also provides protection for the low pressure portions of the RHR system. In addition, automatic isolation may occur for reasons of vessel water inventory retention which is unrelated to piping pressure ratings. See Section 5.2.5 for an explanation of the leak detection system and the isolation signals.

The RHR pumps are protected against damage from a closed discharge valve by means of automatic minimum flow valves, which open when the main line flow is low and close when the main line flow is greater than the setpoint specified in the Technical Specifications.

5.4.7.1.3 Design Basis for Pressure Relief Capacity

The relief valves in the RHR system are sized for one or both of the following bases:

a. Thermal relief,
b. Valve bypass leakage

Relief valves are set to ensure that the design pressure plus 10% accumulation is not exceeded anywhere in the system being protected. A check valve, RHR-V-209, is installed across RHR-V-9 to prevent thermal overpressurization between RHR-V-8 and RHR-V-9.

The relief valves protecting the RHR system are listed below (see Figure 5.4-15):

Relief Valve	Nominal Setpoint (psig)	Required Capacity (gpm)	Piping Location	Design Pressure (psig)
RHR-RV-88A	205	1	RHR pump suction from suppression pool	220 (loop A)
RHR-RV-88B	205	1		220 (loop B)
RHR-RV-88C	110	1		125 (loop C)
RHR-RV-5	183	1	RHR pump suction from recirculation pipe	220
RHR-RV-25A	487	1	RHR discharge	500
RHR-RV-25B	488	1	RHR discharge	500
RHR-RV-25C	493	1	RHR discharge	500
RHR-RV-30	103	1	RHR flush line to radwaste	125
RHR-RV-36*				

All RHR relief valves are purchased to ASME Section III, Class 2, requirements to match the requirements of the piping they are protecting. As such, the setpoint tolerance is plus or minus 3% for setpoints above 70 psi per ASME Section III, Paragraph NC-7600. Pressure buildups in isolated lines will be slow and discharges from relief valves on these lines will be small. Water hammer and other hydrodynamic loads are not considered a potential problem in RHR relief valve piping.

Redundant interlocks prevent opening valves to the low-pressure suction piping when the reactor pressure is above the shutdown range. These same interlocks initiate valve closure on increasing reactor pressure.

A pressure interlock prevents connecting the discharge piping to the primary system whenever the primary pressure is greater than the design value. In addition a high-pressure check valve will close to prevent reverse flow if the pressure should increase. Relief valves in the discharge piping are sized to account for leakage past the check valve.

The RHR cooling system is connected to higher pressure piping at (a) shutdown cooling suction, (b) shutdown cooling return, (c) LPCI injection, and (d) head spray. The vulnerability to overpressurization of each location is discussed in the following paragraphs:

* RHR-RV-36 has been permanently removed from Columbia Generating Station. It has been replaced with a blind-flanged "Testable Pipe Spool Assembly," RHR-TPSA-1.

The shutdown cooling suction piping has two gate valves (RHR-V-8 and RHR-V-9) in series which have independent pressure interlocks to prevent opening at high reactor pressure. No single active failure or operator error will result in overpressurization of the lower pressure piping. With the RHR pumps normally lined up to the suppression pool (RHR-V-6A and RHR-V-6B closed), the shutdown cooling suction line is protected from thermal expansion or from leakage past RHR-V-8 by RHR-RV-5. A bypass around RHR-V-6A may also be used to route leakage past RHR-V-8 and RHR-V-9 to the suppression pool. With all the RHR suction valves closed, the suction piping is protected from thermal expansion or leakage past the discharge check valves by RHR-RV-88A, RHR-RV-88B, and RHR-RV-88C. When the bypass around RHR-V-6A is not in service, it will be isolated using a single valve. This will allow the installed relief valves discussed above to protect the bypass piping.

The shutdown cooling return line has swing check valves (RHR-V-50A and RHR-V-50B) to protect it from higher vessel pressures. Additionally, a gate valve (RHR-V-53A and RHR-V-53B) is located in series and has a pressure interlock to prevent opening at high reactor pressures. No single active failure or operator error will result in overpressurization of the lower pressure piping.

Each LPCI injection line has a swing check valve (RHR-V-41A, RHR-V-41B, and RHR-V-41C) to protect it from higher vessel pressures. Additionally, a gate valve (RHR-V-42A, RHR-V-42B, and RHR-V-42C) is located in series and has pressure interlocks to prevent opening at high reactor vessel pressure. No single active failure or operator error will result in overpressurization of the lower pressure piping.

The head spray piping has three swing check valves in series [two belonging to the RCIC system and one (RHR-V-19) belonging to the RHR system], to protect it from higher vessel pressures. Two of the swing check valves have air operators but are only capable of opening the testable check valve if the differential pressure is less than 5.0 psid. Additionally, a globe valve (RHR-V-23) is located in series and has a pressure interlock to prevent opening at high reactor pressures. No single active failure or operator error will result in the overpressurization of the lower pressure piping.

Overpressurization protection of the RHR discharge piping for thermal expansion or from leakage past the head spray, shutdown injection, and LPCI isolation valves is provided by RHR-RV-25A, RHR-RV-25B, and RHR-RV-25C.

The RHR drain system to radwaste is protected from thermal expansion or from leakage past the isolation valves RHR-V-71A, RHR-V-71B, RHR-V-71C, RHR-V-72A, RHR-V-72B, and RHR-V-72C by RHR-RV-30.

5.4.7.1.4 Design Basis With Respect to General Design Criterion 5

The RHR system for this unit does not share equipment or structures with any other nuclear unit.

5.4.7.1.5 Design Basis for Reliability and Operability

The design basis for the shutdown cooling modes of the RHR system is that these modes are controlled by the operator from the control room. The operations performed outside of the control room using the normal shutdown is manual operation of a local flushing water admission valve, which is the means of ensuring that the suction line of the shutdown portions of the RHR system is filled and vented. In addition, the 0.75-in. bypass around RHR-V-6A would be isolated if necessary.

Two modes of operation provide the shutdown cooling function for the RHR system. One mode, the normal Shutdown Cooling Mode, is the preferred operational mode. Although preferred, this mode of RHR does not meet the redundancy and single failure requirements of IEEE 279 and 10 CFR 50 Appendix A, GDC 34. As a result, a second shutdown cooling mode, the Alternate Shutdown Cooling Mode, is provided and is the shutdown cooling mode credited to meet the requirements of IEEE 279 and GDC 34. This mode is safety related, Quality Class 1, Seismic Category 1, redundant and single failure proof. Since the normal Shutdown Cooling Mode of RHR is preferred for CGS, the components required for the operation of this mode are maintained as safety related, Quality Class 1.

For the normal shutdown cooling mode, two separate shutdown cooling loops are provided. The reactor coolant temperature can be brought to 212°F in less than 36 hr with only one loop in operation. With the exception of the shutdown suction including the reactor recirculation loop suction and discharge valves, and shutdown return, the entire RHR system is safety grade and redundant, is part of the ECCS and containment cooling systems, and is designed with the flooding protection, piping protection, power separation, etc., required of such systems. See Section 6.3 for an explanation of the design bases for ECCS systems. Shutdown cooling suction and discharge valves are required to be powered from both offsite and standby emergency power for purposes of isolation and shutdown following a loss of offsite power. In the event that the outboard shutdown cooling suction supply valve (RHR-V-8) fails to open from the control room, an operator may be sent to open the valve by hand.

If the attempt to open the outboard valve proves unsuccessful, or the inboard shutdown cooling suction supply valve (RHR-V-9) fails to open, the operator will establish the alternate shutdown cooling mode path as described in the notes to Figure 15.2-10, Activity C1 or C2.

For the alternate shutdown cooling mode, if vessel depressurization were to be achieved by manual actuation of relief valves, three valves would need to be actuated to pass sufficient steam flow to depressurize the vessel.

Low-pressure liquid flow test results are presented in NEDE-24988-P. This test program adequately demonstrated the ability to use SRVs in the alternate shutdown cooling mode.

Following reactor depressurization (i.e., 100°F/hr), an alternate shutdown coolant flow rate of 2600 gpm would be required to bring the reactor to a shutdown condition. This flow capacity can be achieved by using one ADS valve. However, three valves are always available.

Calculations demonstrate that in the alternate shutdown cooling mode, with one RHR pump in operation, the total system resistance head is 550 ft using one SRV valve. At this calculated head, the pump capacity is 4000 gpm and the reactor pressure is 160 psig.

The air supply for the ADS valves is discussed in Sections 5.2.2, 6.2.2, and 7.3.1.

5.4.7.1.6 Design Basis for Protection from Physical Damage

The RHR system is designed to the requirements of Table 3.2-1. With the exception of the common shutdown cooling line, redundant components of the RHR system are physically located in different quadrants of the reactor building, and are supplied from independent and redundant electrical divisions. Further discussion on protection from physical damage is provided in Section 6.3.

5.4.7.2 Systems Design

5.4.7.2.1 System Diagrams

All of the components of the RHR system are shown in Figure 5.4-15. A description of the controls and instrumentation is presented in Section 7.3.1.1.1.

A process diagram and process data are shown in Figures 5.4-16 and 5.4-17. All of the sizing modes of the system are shown in the process data. The functional control diagram for the RHR system is shown in Figure 7.3-10.

Interlocks are provided (a) to prevent draining vessel water to the suppression pool, (b) to prevent opening vessel suction valves above the suction line design pressure, or above the discharge line design pressure with the pump operating at shutoff head, (c) to prevent inadvertent opening of drywell spray valves, and (d) to prevent pump start when suction valve(s) are not open. This interlock is defeated for the RHR FPC assist mode (see Section 9.1.3).

The RHR system may be used to supplement the cooling capacity of the FPC system. This mode requires the installation of spool pieces and the opening of normally locked closed valves (see Section 9.1.3.2 for details).

The normal shutdown cooling mode of RHR loop B can be aligned to return a portion of the cooling flow back into the reactor vessel via the RCIC head spray nozzle.

The LPCS system may be cross tied with the RHR system to provide a flow path from the CST to the LPCS system via RHR. This preoperational alignment provided clean water to the LPCS system during flushing and provided a flowpath to the vessel for the core spray sparger test. This spoolpiece is not expected to be used again during the lifetime of the plant.

The administrative controls used for these spoolpieces, interlocks, and valves are procedurally regulated to ensure proper system function.

5.4.7.2.2 Equipment and Component Description

a. System main pumps

The RHR main system pumps are motor-driven deepwell pumps with mechanical seals. The pumps are sized on the basis of the LPCI mode (modes A1 and A2, see Figure 5.4-17). Design pressure for the pump suction structure is 220 psig with a temperature range from 40°F to 360°F. Design pressure for the pump discharge structure is 500 psig. The bases for the design temperature and pressure are maximum shutdown cut-in pressures and temperature, minimum ambient temperature, and maximum shutoff head. The pump housing is carbon steel and the shaft is stainless steel. System configuration (elevation, piping design, etc.) ensures that minimum pump NPSH requirements are met with margin.

Figures 5.4-18 through 5.4-20 are the actual pump performance curves.

The RHR pumps are designed for the life of the plant (40 years) and tested for operability assurance and performance as follows:

1. In-shop tests, including: (a) hydrostatic tests of pressure retaining parts at 1.5 times the design pressure, (b) performance tests to determine the total developed head at zero flow and design flow, and (c) NPSH requirements.

2. After the pumps were installed in the plant, they underwent (a) the system hydro test, (b) functional tests, (c) periodic testing to verify operability in accordance with the Inservice Testing (IST) Program Plan, and (d) about 1 month of operation each year for a refueling shutdown (shutdown operation time has been reduced coincident with reduced outage times).

3. In addition, the pumps are designed for a postulated single operation of 3 to 6 months for one accident during the 40 year life of the plant.

4. The application of the Columbia AMPs verifies that the identified structures, systems, and components will continue to provide their identified intended function(s) during the period of extended operation.

A listing of GE operating experience of Ingersoll-Rand RHR pumps is provided in Tables 5.4-3 and 5.4-4.

b. Heat exchangers

The RHR system heat exchangers are sized on the basis of the duty for the shutdown cooling mode (mode E of the Process Data). All other uses of these exchangers require less cooling surface.

Flow rates are 7450 gpm (rated) on the shell side and 7400 gpm (rated) on the tube side (service water side). Rated inlet temperature is 95°F tube side. Design temperature range of both shell and tube sides are 40°F to 480°F. The tube side water temperature may be as low as 32°F. The low temperature condition is acceptable, based on compliance with the ASME III, Class 2, code. Design pressure is 500 psig on both sides. Fouling allowances are 0.0005 shell side and 0.002 tube side. The construction materials are carbon steel for the pressure vessel with stainless steel tubes and stainless steel clad tube sheet.

c. Valves

All of the directional valves in the system are conventional gate, globe, and check valves designed for nuclear service. The injection valves, reactor coolant isolation valves, and pump minimum flow valves are high speed valves, as operation for LPCI injection or vessel isolation requires. Valve pressure ratings are specified as necessary to provide the control or isolation function: i.e., all vessel isolation valves are rated as Class 1 nuclear valves rated at the same pressure as the primary system.

The pump minimum flow valves (RHR-FCV-64) open automatically at main line flows less than approximately 800 gpm. This allows flow to return to the suppression pool through the minimum flow bypass line, which branches off the main line upstream of the flow element. The minimum flow valve closes at main line flows greater than approximately 900 gpm and forces the entire pump discharge flow through the main line. The minimum flow valve controls meet IEEE-279 requirements.

To prevent loss of vessel inventory to the suppression pool when operating shutdown cooling or RHR/FPC assist mode, the minimum flow valve is not

permitted to open. Administrative controls ensure that the valve is returned to normal status following the conclusion of shutdown cooling.

d. Restricting orifices

The metering orifices in the discharge lines do not serve as restricting orifices. The piping for each mode of RHR operation has been investigated to ensure that the resistance is low enough to allow the rated flows given in Figure 5.4-17 yet high enough to prevent pump runout. A restricting orifice is necessary in the system test line to prevent excessive runout during SPC and test modes and in the main discharge line to prevent excessive runout for LPCI C system. In addition, restriction orifices are installed ahead of the RHR-V-53A and RHR-V-53B valves to prevent excessive pump runout or valve cavitation during the shutdown cooling mode. Figure 5.4-15 indicates the location of restricting orifices.

Additionally, two orifices are installed in the FPC system to minimize cavitation and limit flow when RHR is used to assist FPC.

e. ECCS portions of the RHR system

The ECCS portions of the RHR system include those sections described in Figure 5.4-16.

The route includes suppression pool suction strainers, suction piping, RHR pumps, discharge piping, injection valves, and drywell piping into the vessel nozzles and core region of the reactor vessel.

The SPC components include pool suction strainers, suction piping, pumps, heat exchangers, and pool return lines.

Containment spray components are the same as SPC except that the spray headers replace the pool return lines.

5.4.7.2.3 Controls and Instrumentation

Controls and instrumentation for the RHR system are described in Section 7.3. The RHR system relief valve capacities and settings are listed in Section 5.4.7.1.3.

5.4.7.2.4 Applicable Codes and Classifications

See Section 3.2.

5.4.7.2.5 Reliability Considerations

The RHR system has included the redundancy requirements of Section 5.4.7.1.5. Two redundant loops have been provided to remove residual heat. With the exception of the common shutdown cooling line and the shutdown return valves (RHR-V-53A and RHR-V-53B) which are powered from the same division power source, all mechanical and electrical components are separate. Either loop is capable of cooling down the reactor within a reasonable length of time.

5.4.7.2.6 Manual Action

RHR (shutdown cooling mode)

In the shutdown cooling mode of operation, when reactor vessel pressure is 48 psig or less, a service water pump is started and cooling water flow established through a heat exchanger. The RHR pump suction valve RHR-V-4A and/or RHR-V-4B is then closed and shutdown cooling isolation valves RHR-V-9 and RHR-V-8 opened. RHR pump suction valve RHR-V-6A and/or RHR-V-6B is then opened. Pump suction piping is prewarmed and provided a nominal flush by opening valves to radwaste. These effluent valves to radwaste are then closed and the RHR pump is started. The cooldown rate is controlled by adjusting the heat exchanger outlet valve and heat exchanger bypass valve to achieve the desired temperature of the water returning to the reactor vessel while maintaining the total flow at approximately 7450 gpm.

If prewarming valves were accidentally left open following initiation of shutdown cooling, reactor pressure vessel (RPV) coolant inventory would drain to radwaste. If loss of inventory remained undetected and makeup did not occur, isolation valves RHR-V-8 and RHR-V-9 would automatically close at the RPV scram level specified in the Technical Specifications; depressurization or loss of water from the RHR system causes a low pressure alarm in the RHR discharge piping.

If the bypass around RHR-V-6A were inadvertently left open following the initiation of shutdown cooling using RHR loop B, the RPV coolant inventory would drain to the suppression pool at a flow rate of 1 gpm or less. If this loss of inventory remained undetected and makeup did not occur, RHR-V-8 and RHR-V-9 would automatically close at the RPV scram level.

The manual actions required for the most limiting failure are discussed in Section 5.4.7.1.5.

5.4.7.3 Performance Evaluation

Thermal performance of the RHR heat exchangers is based on the capability to remove enough sensible and decay heat from the reactor system to reduce the bulk reactor coolant temperature

to 125°F within 25 hours after control rod insertion, with two RHR loops in operation. Because cooldown is usually a controlled operation, maximum service water temperature less 10°F is used as the service water inlet temperature. These are nominal design conditions; if the service water temperature is higher, the exchanger capabilities are reduced and the cooldown time may be longer or vice versa.

5.4.7.3.1 Shutdown Cooling With All Components Available

No typical curve is included here to show vessel cooldown temperatures versus time due to the infinite variety of such curves due to (a) clean steam systems that use the main condenser as the heat sink when nuclear steam pressure is insufficient to maintain steam air ejector performance, (b) the fouling of the heat exchangers, (c) operator use of one or two cooling loops, (d) coolant water temperature, and (e) system flushing time. Since the exchangers are designed for the fouled condition with relatively high service water temperature, the units have excess capability to cool when first used at high vessel temperatures. Total flow mix temperature is controlled to avoid exceeding 100°F/hr cooldown rate. See Figure 5.4-21 for minimum shutdown cooling time to reach 212°F.

5.4.7.3.2 Shutdown Cooling With Most Limiting Failure

Shutdown cooling under conditions of the most limiting failure is discussed in Section 5.4.7.1.5. The capability of the heat exchanger for any time period is balanced against residual heat, pump heat, and sensible heat. The excess over residual heat and pump heat is used to reduce the sensible heat.

5.4.7.4 Preoperational Testing

The preoperational test program and startup test program were used to generate data to verify the operational capabilities of equipment in the system, such as each instrument, setpoint, logic element, pump, heat exchanger, valve, and limit switch. In addition these programs verified the capabilities of the system to provide the flows, pressures, cooldown rates, and reaction times required to perform all system functions as specified for the system or component in the System Data Sheets and Process Data. Logic elements were tested electrically; valves, pumps, controllers, relief valves were tested mechanically; finally the system was tested for total system performance against the design requirements as specified above using both the offsite power and standby emergency power. Preliminary heat exchanger performance was evaluated by operating in the pool cooling mode, but a vessel cooldown was used for the final check due to the small temperature differences available with pool cooling (see Section 14.2).

5.4.8 REACTOR WATER CLEANUP SYSTEM

The reactor water cleanup (RWCU) system is an auxiliary system, a small part of which is part of the RCPB up to and including the outermost containment isolation valve. The other portions of the system are not part of the RCPB and are isolated from the reactor.

5.4.8.1 Design Bases

5.4.8.1.1 Safety Design Bases

The RCPB portion of the RWCU system meets the requirements of Regulatory Guides 1.26 and 1.29 to

a. Prevent excessive loss of reactor coolant,

b. Prevent the release of radioactive material from the reactor,

c. Isolate the cleanup system from the RCPB, and

d. Prevents loss of liquid reactivity control material from the reactor vessel during standby liquid control (SLC) system operation.

5.4.8.1.2 Power Generation Design Bases

The RWCU system

a. Removes solid and dissolved impurities from reactor coolant such that the water purity meets Regulatory Guide 1.56,

b. Discharges excess reactor water during startup, shutdown, and hot standby conditions,

c. Minimizes temperature gradients in the recirculation piping and vessel during periods when the main recirculation pumps are unavailable,

d. Minimizes cleanup system heat loss, and

e. Enables the major portion of the RWCU system to be serviced during reactor operation.

5.4.8.2 System Description

The RWCU system (see Figures 5.4-22 and 5.4-23) continuously purifies reactor water during all modes of reactor operation. The system takes suction from the inlet of each reactor main recirculation pump and from the reactor pressure vessel bottom head. Processed water is returned to the reactor pressure vessel, to the main condenser, or radwaste.

The cleanup system can be operated at any time during planned operations, or it may be shut down. The cleanup system is classified as a primary power generation system. The cleanup system is not an engineered safety system.

Major equipment of the RWCU system is located in the reactor building. This equipment includes the pumps and the regenerative and nonregenerative heat exchangers. Filter-demineralizers and supporting equipment are located in the radwaste building. The entire system is connected by associated valves and piping; controls and instrumentation provide proper system operation. Design data for the major pieces of equipment are presented in Table 5.4-5.

Reactor water is cooled in the regenerative and nonregenerative heat exchangers, filtered, demineralized, and returned to the reactor pressure vessel through the shell side of the regenerative heat exchanger.

The system pump is capable of producing a nominal flow of 181,300 lbm/hr. Two filter demineralizer units are used to process this quantity of water. The system can operate at reduced flow rates with one filter demineralizer unit.

The temperature of water processed through the filter-demineralizers is limited by the resin operating temperature. Therefore, the reactor water must be cooled before being processed in the filter-demineralizers. The regenerative heat exchanger transfers heat from the tube side (hot process) to the shell side (cold process). The shell side flow returns to the reactor. The nonregenerative heat exchanger cools the process further by transferring heat to the reactor building closed cooling water system.

The filter-demineralizers (see Figure 5.4-24) are pressure precoat type filters using ion exchange resins. Spent resins are not regenerable and are sluiced from the filter-demineralizers to a backwash receiving tank from which they are transferred to the radwaste system for processing and disposal. To prevent resins from entering the RRC in the event of complete failure of a filter-demineralizer resin septum, a strainer is installed on each filter-demineralizer. Each strainer and filter-demineralizer vessel has a control room alarm that is energized by high differential pressure. Further increase in differential pressure will isolate the filter-demineralizer. The backwash and precoat cycle for a filter-demineralizer is automatic to prevent operational errors such as inadvertent openings of valves that would initiate a backwash or contaminate reactor water with resins. The filter-demineralizer piping

configuration is arranged to ensure that transfers are complete and crud traps are avoided. A bypass line is provided around the filter-demineralizers.

On low flow or loss of flow in the system, flow is maintained through each filter-demineralizer by its own holding pump. Sample points are provided in the common influent header and in each effluent line of the filter-demineralizers for continuous indication and recording of system conductivity. High conductivity is annunciated in the control room. The influent sample point is also used as the normal source of reactor coolant grab samples. Sample analysis also indicates the effectiveness of the filter-demineralizers.

The suction line of the RCPB portion of the RWCU system contains two motor-operated isolation valves that automatically close in response to signals from the RPV low water level and the leak detection system. The outboard isolation valve, RWCU-V-4, automatically closes in response to signals from actuation of the SLC system and high nonregenerative heat exchanger outlet water temperature. These actions prevent (a) loss of reactor coolant, (b) release of radioactive material from the reactor, (c) removal of liquid reactivity control material, and (d) thermal damage to ion-exchange resins. The RCPB isolation valves may be remote manually operated to isolate the system equipment for maintenance or servicing.

A remote manual-operated gate valve on the return line to the reactor provides long-term leakage control. Instantaneous reverse flow isolation is provided by check valves in the RWCU piping.

Operation of the RWCU system is controlled from the main control room. Resin-changing operations, which include backwashing and precoating, are controlled from the radwaste control room in the radwaste building.

A functional control diagram is provided in Figure 7.3-1.

5.4.8.3 System Evaluation

The RWCU system in conjunction with the condensate treatment system and FPC and cleanup system maintains reactor water quality during all reactor operating modes (normal, standby, startup, shutdown, and refueling). The RWCU components provide a system with the capability to support reactor operations at power levels up to 3629 MWt.

The component pressure and temperature design conditions are shown in Table 5.4-5. The process containing components (piping, valves, vessels, heat exchangers, pumps) are designed to the requirements of Section 3.2. The control requirements for the RCPB isolation valves are designed to the requirements of Table 7.3-5. The nonregenerative heat exchanger is sized to maintain the process temperature required for the cleanup demineralizer resin when the cooling capacity of the regenerative heat exchanger is reduced at times when flow is partially bypassed to the main condenser or radwaste.

5.4.8.4 Demineralizer Resins

Regulatory Guide 1.56 compliance is described in Section 1.8.

5.4.8.5 Reactor Water Cleanup Water Chemistry

5.4.8.5.1 Analytical Methods

Chemical analyses methods used for determination of conductivity, pH, and chloride content of primary coolant are as follows:

Conductivity	measured in accordance to ASTM-D-1125
pH	measured in accordance to ASTM-D-1293
Chloride	determined by ion chromatography in accordance with the vendor's operating manual

5.4.8.5.2 Relationship of Filter-Demineralizer Condition to Water Chemistry

The filter-demineralizer condition during normal power operation is related to inlet conductivity and water volume processed through the unit. The inlet conductivity is related to impurity concentration through the equivalent conductance of the constituents of the process fluid. System flow rates are measured and recorded to determine quantity of water processed.

Periodically, an On-Line NobleChem™ application will be performed, which injects platinum into the reactor coolant, resulting in a microscopic layer of the noble metal to be deposited onto the reactor internals.

Conductivity instrumentation is calibrated against laboratory flow cells in accordance with ASTM-D-1125. The alarm setpoints for the conductivity instrumentation at the inlet and outlet of the filter-demineralizers are set to indicate marginal performance or breakthrough of the filter-demineralizers.

The quantity of the principle ion(s) likely to cause demineralizer breakthrough are not calculated using conductivity as discussed in position 4.C of Regulatory Guide 1.56. Instead, actual ion sample data is taken and used to determine ion levels at the outlet of the filter-demineralizer. When sample data indicates resin breakthrough or the allowable pressure drop is exceeded, the filter-demineralizer is regenerated.

5.4.9 MAIN STEAM LINES AND FEEDWATER PIPING

5.4.9.1 Safety Design Bases

To satisfy the safety bases, the main steam and feedwater lines have been designed

a. To accommodate operational stresses, such as internal pressures and SSE loads, without a failure that could lead to the release of radioactivity in excess of the guideline values in published regulations, and

b. With suitable accesses to permit IST and inspections.

5.4.9.2 Power Generation Design Bases

To satisfy the design bases

a. The main steam lines have been designed to conduct steam from the reactor vessel over the full range of reactor power operation, and

b. The feedwater lines have been designed to conduct water to the reactor vessel over the full range of reactor power operation.

5.4.9.3 Description

The main steam piping is described in Section 10.3. The main steam and feedwater piping is shown in Figure 10.3-2.

The feedwater piping consists of two 24-in. O.D. lines which penetrate the containment and drywell and branch into three 12-in. lines each, which connect to the reactor vessel. Each 24-in. line includes three containment isolation valves consisting of one check valve inside the drywell and one motor-operated gate valve and one check valve outside the containment. The design pressure and temperature of the feedwater piping between the reactor and maintenance valve is 1300 psig and 575°F. The Seismic Category I design requirements are placed on the feedwater piping from the reactor through the outboard isolation valve and connected piping up to and including the first isolation valve in the connected piping.

The materials used in the piping are in accordance with the applicable design code and supplementary requirements described in Section 3.2.

The feedwater system is further described in Sections 7.7.1, 7.7.2, and 10.4.7.

5.4.9.4 Safety Evaluation

Differential pressure on reactor internals under the assumed accident condition of a ruptured steam line is limited by the use of flow restrictors and by the use of four main steam lines. All main steam and feedwater piping is designed in accordance with the requirements defined in Section 3.2.

5.4.9.5 Inspection and Testing

Inspection and testing of the main steam lines and feedwater piping is performed in accordance with the ISI Program Plan to ensure compliance with applicable codes.

5.4.10 PRESSURIZER

Not Applicable to BWRs.

5.4.11 PRESSURIZER RELIEF DISCHARGE SYSTEM

Not Applicable to BWRs.

5.4.12 VALVES

5.4.12.1 Safety Design Bases

Line valves such as gate, globe, and check valves are located in the fluid systems to perform a mechanical function. Valves are components of the system pressure boundary and, having moving parts, are designed to operate efficiently to maintain the integrity of this boundary.

The valves operate under the internal pressure/temperature loading as well as the external loading experienced during the various system transient operating conditions. The design criteria, the design loading, and acceptability criteria are as required in Section 3.9.3 for ASME Class 1, 2, and 3 valves. Compliances with ASME Codes are discussed in Section 5.2.1.

5.4.12.2 Description

Line valves furnished are manufactured standard types, designed and constructed in accordance with the requirements of ASME Section III for Class 1, 2, and 3 valves. All materials, exclusive of seals, packing and wearing components, are designed to endure the 40-year plant life under the environmental conditions applicable to the particular system when appropriate maintenance is periodically performed.

The application of the Columbia AMPs verifies that the identified structures, systems, and components will continue to provide their identified intended function(s) during the period of extended operation.

Power operators have been sized to operate successfully under the maximum differential pressure determined in the design specification or design basis calculations.

5.4.12.3 Safety Evaluation

Line valves are shop tested by the manufacturer for performability. Pressure retaining parts are subject to the testing and examination requirements of Section III of the ASME Code. To minimize internal and external leakage past seating surfaces, maximum allowable leakage rates are stated in the design specifications for both back seat as well as the main seat for gate and globe valves.

Valve construction materials are compatible with the maximum anticipated radiation dosage for the service life of the valves.

5.4.12.4 Inspection and Testing

Valves serving as containment isolation valves and which must remain closed or open during normal plant operation may be partially exercised during this period to assure their operability at the time of an emergency or faulted conditions. Other valves, serving as a system block or throttling valves, may be exercised when appropriate.

Motors used with valve actuators are furnished in accordance with applicable industry standards. Each motor actuator has been assembled, factory tested or tested in-situ, and adjusted on the valve for proper operation, position and torque switch setting, position transmitter function (where applicable), and speed requirements. A selected set of motor-operated valves with active safety functions (Generic Letter 89-10 Program and Generic Letter 96-05 Program) have additionally been tested to demonstrate adequate stem thrust (or torque) capability to open (or close) the valve within the specified time at specified maximum expected differential pressure. Modifications have been made to several gate valves to eliminate the possibility for internal pressure locking forces which could prevent the actuator from unseating the valve (Generic Letter 95-07 Program).

Tests verified no mechanical damage to valve components during full stroking of the valve. Suppliers were required to furnish assurance of acceptability of the equipment for the intended service based on any combination of

a. Test stand data,
b. Prior field performance,
c. Prototype testing, and
d. Engineering analysis.

Preoperational and operational testing performed on the installed valves consists of total circuit check out and performance tests to verify design basis capability including speed requirements at specified differential pressure.

5.4.13 SAFETY AND RELIEF VALVES

A listing of the safety and relief valves is provided in Table 5.4-6.

5.4.13.1 Safety Design Bases

Overpressure protection is provided at isolatable portions of systems in accordance with the rules set forth in the ASME Code, Section III for Class 1, 2, and 3 components.

5.4.13.2 Description

Pressure relief valves are designed and constructed in accordance with the same code class as that of the line valves in the system.

The design criteria, design loading, and design procedure are described in Section 3.9.3.

5.4.13.3 Safety Evaluation

The use of pressure relieving devices will ensure that overpressure will not exceed 10% above the design pressure of the system. The number of relieving devices on a system or portion of a system have been determined on an individual component basis.

5.4.13.4 Inspection and Testing

The valves are inspected and tested in accordance with ASME Section XI, if required.

Other than the main steam relief valves, no provisions are to be made for inline testing of pressure relief valves, other than set pressure and leakage. Certified set pressures and relieving capacities are stamped on the body of the valves by the manufacturer and further examinations would necessitate removal of the component. For subsequent set pressure changes, the valve body will be stamped or a stamped tag will be attached indicating the new pressure.

5.4.14 COMPONENT AND PIPING SUPPORTS

Support elements are provided for those components included in the RCPB and the connected systems.

5.4.14.1 Safety Design Bases

Design loading combinations, design procedures, and acceptability criteria are as described in Section 3.9.3. Flexibility calculations and seismic analysis for Class 1, 2, and 3 component and piping supports within the ASME boundary of jurisdiction conform with the appropriate requirements of ASME Section III, Subsection NF. Outside the ASME boundary steel structures conform to the AISC manual of Steel Construction.

Spacing and size of pipe support elements were based on the piping analysis performed in accordance with ASME Section III and further described in Section 3.7. Standard manufacturer hanger types were used and fabricated of materials per ASME Section III, Subsection NF.

5.4.14.2 Description

The use and location or rigid-type supports, variable or constant spring-type supports, and anchors or guides are determined from the results of static and dynamic analyses of the associated piping systems. The normal and transient (including seismic) support point loads generated by the piping analyses are combined as prescribed by Sections 3.9.3 and 3.7, and then utilized as the design basis loadings for each affected pipe support.

Typically, components support elements are manufacturers' standard items which are purchased with certified load capacity data reports. Nonstandard support structures and pressure boundary attachments are qualified by detailed structural analyses in compliance with applicable load combinations and governing design codes.

As described by Sections 5.4.14.1 and 5.4.14.2, each component support system has been rigorously evaluated with all due consideration for extreme loading conditions and satisfaction of conservative design allowable stresses. This demonstration of structural adequacy combined with a comprehensive testing and inspection program (see Section 5.4.14.3) constitutes the safety evaluation basis for these passive support elements.

5.4.14.3 Inspection and Testing

After completion of the installation and balancing of a support system, all hanger elements were visually examined to ensure that they were in correct adjustment to their cold setting position. On initial hot startup operations, thermal growth was observed and it was confirmed that all spring-type hangers and snubbers were functioning properly between their hot and cold setting positions. In addition, during power ascension testing critical systems were instrumented and monitored for vibration response under normal and plant transient conditions. The results of these tests showed all systems to be functioning as predicted by design analyses and thus all systems were accepted as operable and in compliance with the governing ASME Code.

5.4.15 HIGH-PRESSURE CORE SPRAY SYSTEM

See Section 6.3 for a description of the HPCS system.

5.4.16 LOW-PRESSURE CORE SPRAY SYSTEM

See Section 6.3 for a description of the LPCS system.

5.4.17 STANDBY LIQUID CONTROL SYSTEM

See Section 9.3.5 for a description of the SLC system.

5.4.18 REFERENCES

5.4-1 Ianni, P. W., "Effectiveness of Core Standby Cooling Systems for General Electric Boiling Water Reactors," APED-5458, March 1968.

5.4-2 "Design and Performance of General Electric Boiling Water Reactor Main Steam Line Isolation Valves," APED-5750, General Electric Co., Atomic Power Equipment Department, March 1969.

5.4-3 "Power Uprate with Extended Load Line Limit Safety Analysis for WNP-2," NEDC-32141P, General Electric Company.

5.4-4 "Generic Evaluations of General Electric Boiling Water Reactor Power Uprate - Volume I," NEDC-31984P, General Electric Company.

5.4-5 "Reactor Core Isolation Cooling System (RCIC)," Design Basis Document, Section 315.

Table 5.4-1

Reactor Coolant Pressure Boundary Pump and Valve Description[a]

Location	Active/Inactive	Valve	Reference Figure
Valve Description			
RHR vessel in	Active	RHR-V-41A	5.4-15
	Active	RHR-V-41B	5.4-15
	Active	RHR-V-41C (E12F041A, B, C)	5.4-15
	Active	RHR-V-42A	5.4-15
	Active	RHR-V-42B	5.4-15
	Active	RHR-V-42C (E12F042A, B, C)	5.4-15
	Inactive	RHR-V-111A	5.4-15
	Inactive	RHR-V-111B	5.4-15
	Inactive	RHR-V-111C (E12F111A, B, C)	5.4-15
RHR/recirculation line in	Active	RHR-V-50A	5.4-15
	Active	RHR-V-50B (E12F050A, B)	5.4-15
	Active	RHR-V-53A	5.4-15
	Active	RHR-V-53B (E12F053A, B)	5.4-15
	Inactive	RHR-V-112A	5.4-15
	Inactive	RHR-V-112B (E12F112A,B)	5.4-15
	Inactive	RHR-V-123A	5.4-15
	Inactive	RHR-V-123B (E12F099A, B)	5.4-15
Head spray	Active	RHR-V-19 (E12F019)	5.4-15
	Active	RHR-V-23 (E12F023)	5.4-15
RHR shutdown cooling suction	Active	RHR-V-8 (E12F008)	5.4-15
	Active	RHR-V-9 (E12F009)	5.4-15
	Inactive	RHR-V-113 (E12F113)	5.4-15
RCIC vessel out	Active	RCIC-V-8 (E51F008)	5.4-11
	Active	RCIC-V-63 (E51F063)	5.4-11
	Active	RCIC-V-64 (E51F064)	5.4-11
	Active	RCIC-V-76 (E51F0076)	5.4-11

Table 5.4-1

Reactor Coolant Pressure Boundary Pump and Valve Description[a] (Continued)

Location	Active/Inactive	Valve	Reference Figure
(Nuclear boiler)			
Reactor vessel head	Inactive	MS-V-1 (B22F001)	10.3-2
	Inactive	MS-V-2 (B22F002)	10.3-2
Feedwater in	Active	RFW-V-10A	10.3-2
	Active	RFW-V-10B (B22F010A, B)	10.3-2
	Inactive	RFW-V-11A	10.3-2
	Inactive	RFW-V-11B (B22F011A, B)	10.3-2
	Active	RFW-V-32A	10.3-2
	Active	RFW-V-32B (B22F032A, B)	10.3-2
	Active	RFW-V-65A	10.3-2
	Active	RFW-V-65B (B22F065A, B)	10.3-2
Safety relief	Active	MS-RV-2A	10.3-2
	Active	MS-RV-3A	10.3-2
	Active	MS-RV-2D	10.3-2
	Active	MS-RV-2C	10.3-2
	Active	MS-RV-1B	10.3-2
	Active	MS-RV-2B	10.3-2
	Active	MS-RV-3C	10.3-2
	Active	MS-RV-3B (B22F013A-H)	10.3-2
	Active	MS-RV-1A	10.3-2
	Active	MS-RV-1D	10.3-2
	Active	MS-RV-1C	10.3-2
	Active	MS-RV-4C	10.3-2
	Active	MS-RV-5C (B22F013J-N)	10.3-2
	Active	MS-RV-4D (B22F013P)	10.3-2
	Active	MS-RV-4B	10.3-2
	Active	MS-RV-4A	10.3-2

Table 5.4-1

Reactor Coolant Pressure Boundary Pump and Valve Description[a] (Continued)

Location	Active/Inactive	Valve	Reference Figure
		(B22F013R-S)	
	Active	MS-RV-5B	10.3-2
	Active	MS-RV-3D	10.3-2
		(B22F013U-V)	
Reactor water cleanup system	Inactive	RWCU-V-103 (G33F103)	5.4-22
Line suction	Active	RWCU-V-1 (G33F001)	5.4-22
	Active	RWCU-V-4 (G33F004)	5.4-22
	Inactive	RWCU-V-100 (G33F100)	5.4-22
	Inactive	RWCU-V-101	5.4-22
	Inactive	(G33F101)	
	Inactive	RWCU-V-102	5.4-22
		(G33F102)	
		RWCU-V-106	5.4-22
		(G33F106)	
Line discharge	Active	RWCU-V-40 (G33F040)	5.4-22
Drain to condenser	Active	MS-V-16	10.3-2
	Active	(B22F016)	
		MS-V-19	10.3-2
		(B22F019)	
MSIV	Active	MS-V-22A	10.3-2
	Active	MS-V-22B	10.3-2
	Active	MS-V-22C	10.3-2
	Active	MS-V-22D	10.3-2
	Active	(B22F022)	
	Active	MS-V-28A	10.3-2
	Active	MS-V-28B	10.3-2
	Active	MS-V-28C	10.3-2
		MS-V-28D	10.3-2
		(B22F028)	

Table 5.4-1

Reactor Coolant Pressure Boundary Pump and Valve Description[a] (Continued)

Location	Active/Inactive	Valve	Reference Figure
Drain to condenser (Recirculation)	Active	MS-V-67A	10.3-2
	Active	MS-V-67B	10.3-2
	Active	MS-V-67C	10.3-2
	Active	MS-V-67D (B22F067)	10.3-2
Recirculation pump suction	Inactive	RRC-V-23A	5.4-7
	Inactive	RRC-V-23B (B35F023)	5.4-7
Flow control (pump discharge)	Inactive[b]	RRC-V-60A	5.4-7
	Inactive[b]	RRC-V-60B (B35F060)	5.4-7
	Inactive	RRC-V-67A	5.4-7
	Inactive	RRC-V-67B (B35F067)	5.4-7
RCIC vessel head in	Active	RCIC-V-13 (E51F013)	5.4-11
	Active	RCIC-V-65 (E51F065)	5.4-11
	Active	RCIC-V-66 (E51F066)	5.4-11
HPCS in	Active	HPCS-V-4 (E22F005)	6.3-4
	Active	HPCS-V-5 (E22F004)	6.3-4
	Inactive	HPCS-V-38 (E22F038)	6.3-4
LPCS in	Active	LPCS-V-5 (E21F005)	6.3-4
	Active	LPCS-V-6 (E21F006)	6.3-4
	Inactive	LPCS-V-51 (E21F051)	6.3-4
Standby liquid control in	Active	SLC-V-4A	9.3-14
	Active	SLC-V-4B	9.3-14
	Active	SLC-V-6	9.3-14
	Active	SLC-V-7	9.3-14
	Inactive	SLC-V-8	9.3-14
Pump description			
Recirculation pump	Inactive	RRC-P-1A	5.4-7
	Inactive	RRC-P-1B (B35C001)	5.4-7

Table 5.4-1

Reactor Coolant Pressure Boundary Pump and Valve Description[a] (Continued)

[a] In addition to the process valves listed herein, there are instrument test conditions, drain valves, and sampling valves less than 1 in. nominal size within the RCPB. See associated system flow diagram figures.

[b] Mechanically blocked in the full open position.

NOTE:

Active components are those whose operability is relied on to perform a safety function during the transients or accidents.

Inactive components are those whose operability (e.g., valve opening or closure, pump operation or trip) is not relied on to perform the system's safety function during the transients or accidents.

Table 5.4-2

Reactor Recirculation System Design Characteristics

Description	
External loops	2
Pump sizes (nominal O.D.)	
Pump suction, in.	24
Pump discharge, in.	24
Discharge manifold, in.	16
Recirculation inlet lines, in.	12
Design pressure (psig)/design temperature (°F)	
Suction piping and valve up to and including pump suction nozzle	1250/575
Pump, discharge valves, and piping between	1650/575
Piping after discharge blocking valve up to vessel	1550/575
Vessel bottom drain	1275/575
Operation at pump related conditions	
Recirculation pump	
Flow, gpm	47,200
Flow, lb/hr	17.85×10^6
Total developed head, ft	805
Suction pressure (static), psia	1025
Required NPSH, ft	115
Water temperature (maximum), °F	533
Pump brake hp (minimum)	8340
Flow velocity at pump suction (approximate), ft/sec	41.5
Pump motor	
Voltage rating	6600
Speed, rpm	1780
Motor rating, hp	8900
Phase	3
Frequency	60
Motor rotor inertia ($lb\text{-}ft^2$)	21,500 Serial: 8385348 21,500 Serial: 8385347 20,600 Serial: 139160-1
Jet pumps	
Number	20
Total jet pump flow, lb/hr	108.5×10^6
Total I.D., in.	6.4

Table 5.4-2

Reactor Recirculation System Design Characteristics (Continued)

Description	
Diffuser I.D., in.	19.0
Nozzle I.D. (five each), in.	1.3
Diffuser exit velocity, ft/sec	16.2
Jet pump head, ft	88.19
Flow control valve[a]	
Type	Ball
Material	Austenitic stainless steel
Valve wide open C_V (minimum), gpm/psi	7000
Valve size diameter, in.	24
Recirculation block valve	
Type	Gate valve
Actuator	Motor
Material	Austenitic stainless steel
Valve size diameter, in.	24
Recirculation pump flow measurement	
Type	Elbow taps
Rated flow (gpm)	47,200
Flow element location	Pump suction line
Range	20-115% rated pump flow
Accuracy (% rated pressure drop)	± 9%
Repeatability (% rated pressure drop)	± 4%

[a] Mechanically blocked in the full open position.

Table 5.4-3

Operating Experience of Ingersoll-Rand Emergency Core Cooling Systems Pumps[a,b]

Plant	*Pump*	*Time (hr)*
Hatch 2	*RHR 2A*	*864*
	2B	*1112*
	2C	*629*
	2D	*569*
	LPCS 2A	*13.5*
	2B	*11.8*
Chinshan 1	*RHR*	*100*
	Core spray	*30*
Chinshan 2	*RHR*	*75*
	Core spray	*20*

[a] *The italicized information is historical and was provided to support the application for an operating license.*

[b] *No problems have been reported on these pumps. Pump design principles applied by Ingersoll-Rand to these units are not unique. Assurance of a predictable functional reliability is also provided by a history of design, production, and application of pumps for similar pumping requirements in other nuclear and nonnuclear applications.*

Table 5.4-4

Operating Experience of Similar Ingersoll-Rand Pumps for BWR Projects Under Review[a,b]

Year	*Size Range (gpm)*	*Number of Pumps*
1963	*< 4000*	*12*
1964	*< 3000*	*24*
1965	*< 5000*	*32*
1966	*< 4500*	*39*
1967	*< 5000*	*39*
	8000	*3*
1968	*< 6500*	*25*
	9000	*6*
	11000	*9*
1969	*< 6500*	*39*
	8000-9000	*9*
1970	*< 6500*	*33*
	8000	*14*
	12,000	*6*
1971	*< 6500*	*53*
	9000	*3*
	10,000-12,000	*12*
1972	*< 6500*	*44*
	8000	*18*
	10,000-12,000	*18*
1973	*< 6500*	*41*
	8000	*8*
	10,000-13,800	*20*
1974	*< 6500*	*32*
	8000	*2*
	10,000-13,800	*30*
1975	*< 7500*	*76*
	8500	*18*
	10,000-13,800	*50*
1976	*8500*	*9*

[a] *The italicized information is historical and was provided to support the application for an operating license.*

[b] *The vertical pumps used for ECCS functions at CGS are sized at 1200 to 8100 gpm. They are multistaged axial pumps. Included here is a partial list of the application history for similar pumps made by the same vendor.*

Although the operating experience in nuclear applications is just beginning, the postoperating experience in nonnuclear applications with these vertical pumps is very extensive. It indicates that the CGS ECCS pumps can be expected to operate as required. In reviewing this table, the generic pump design should be recalled because larger capacity pumps are configured from stages that comprise the smaller capacity pumps. Design refinements are evident in the capacity growth of these stages, whether in single, double, or multiple axial stackups.

Table 5.4-5

Reactor Water Cleanup System

Equipment	Design Data	
Main Cleanup Recirculation Pumps		
Number		2
Capacity (each)		100% (@90 bhp)
Design temperature, °F		575
Design pressure, psig		1420
Discharge head at shutoff, ft		575
Minimum available NPSH, ft		16
Heat Exchangers		
	Regenerative	Nonregenerative
Number	1 (3 shells)	1 (2 shells)
Shell design pressure, psig	1420	150
Shell design temperature, °F	575	370
Tube design pressure, psig	1420	1420
Tube design temperature, °F	575	575
Filter-Demineralizers		
Type		Pressure precoat
Number		2
Design temperature, °F		150
Design pressure, psig		1450

Table 5.4-6

Safety and Relief Valves for Piping Systems
Connected to the Reactor Coolant Pressure Boundary

Main steam line safety/relief valves	MS-RV-1A (B22F013J-N) MS-RV-1B (B22F013A-H) MS-RV-1C (B22F013J-N) MS-RV-1D (B22F013J-N) MS-RV-2A (B22F013A-H) MS-RV-2B (B22F013A-H) MS-RV-2C (B22F013A-H) MS-RV-2D (B22F013A-H) MS-RV-3A (B22F013A-H) MS-RV-3B (B22F013A-H) MS-RV-3C (B22F013A-H) MS-RV-3D (B22F013U-V) MS-RV-4A (B22F013R-S) MS-RV-4B (B22F013R-S) MS-RV-4C (B22F013J-N) MS-RV-4D (B22F013P) MS-RV-5B (B22F013U-V) MS-RV-5C (B22F013J-N)
RCIC system discharge line	RCIC-RV-3
RCIC system suction line	RCIC-RV-17 (E51F017)
RCIC lube oil cooler supply line	RCIC-RV-19T
RCIC vacuum tank	RCIC-RV-33 (E51F033)[a]
Shutdown cooling supply line	RHR-RV-5 (E12F005)
Shutdown cooling return line	RHR-RV-25A RHR-RV-25B (F12F025A, B)
Suppression pool supply for RHR	RHR-RV-88A RHR-RV-88B RHR-RV-88C (E12F088A, B, C)
RHR flush line	RHR-RV-30 (E12F030)
RHR heat exchanger (shell side)	RHR-RV-1A RHR-RV-1B
RWCU regenerative heat exchanger (shell side)	RWCU-RV-1

Table 5.4-6

Safety and Relief Valves for Piping Systems
Connected to the Reactor Coolant Pressure Boundary (Continued)

RWCU regenerative heat exchanger (tube side)	RWCU-RV-3
RWCU blowdown to radwaste system or condenser	RWCU-RV-36 (G33F036)
HPCS suction line	HPCS-RV-14 (E22F014)
HPCS discharge line	HPCS-RV-35 (E22F035)
LPCS discharge line	LPCS-RV-18 (E21F018)
LPCS suction line	LPCS-RV-31 (E21F031)
SLC pump discharge line	SLC-RV-29A SLC-RV-29B (C41F029A, B)

[a] These relief valves are installed in a B31.1 system; not subject to Section XI testing and inspection.

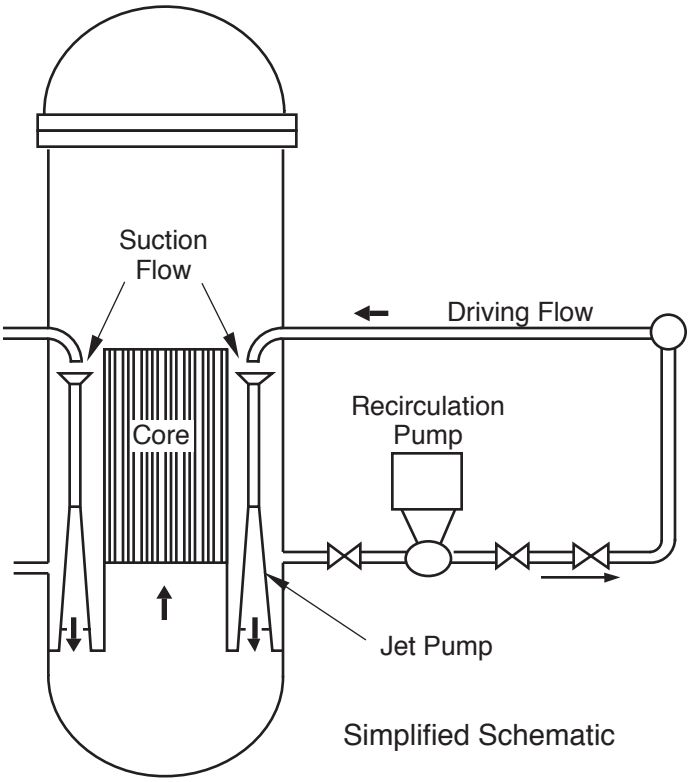

Simplified Schematic

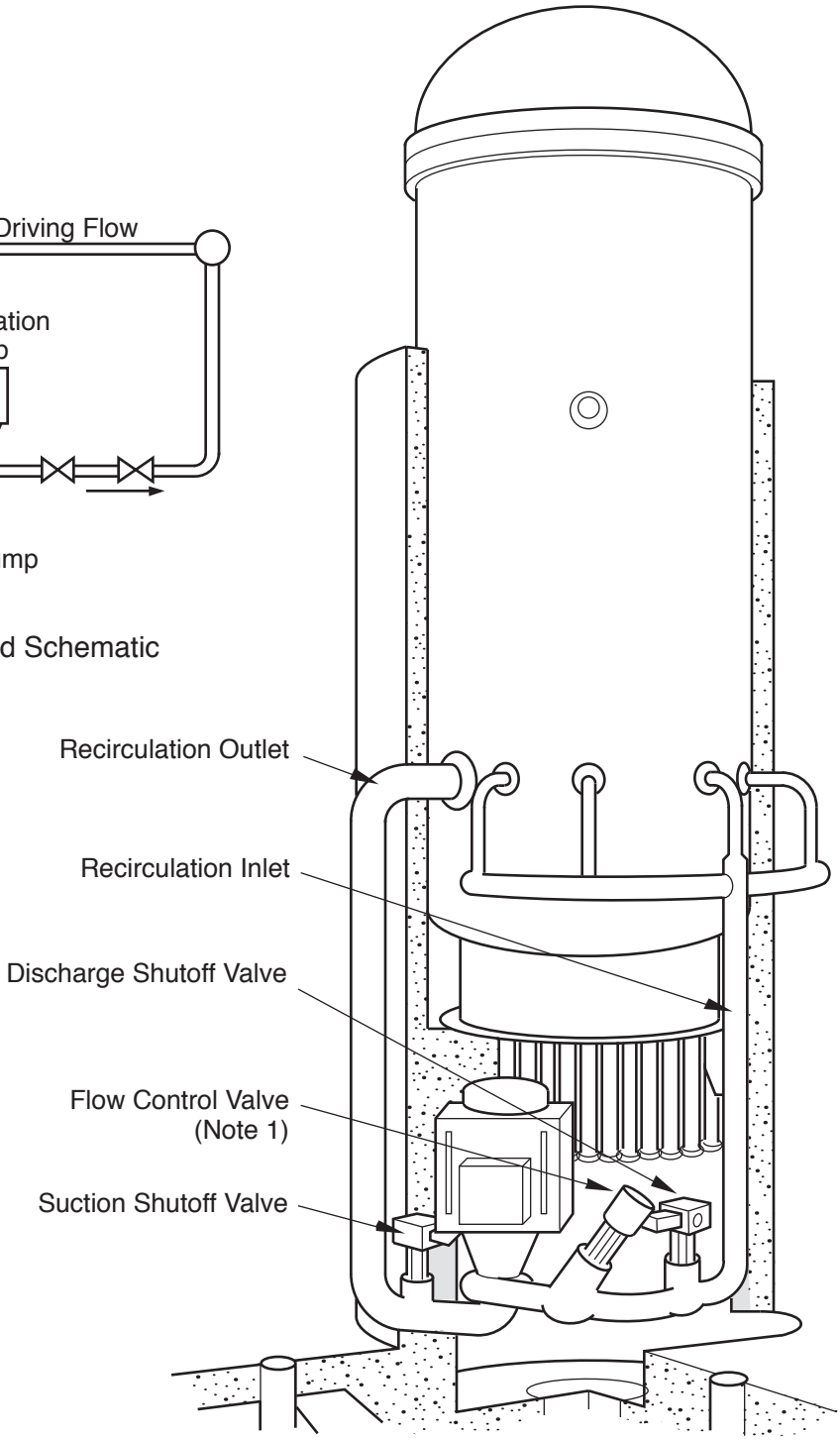

Pictorial View

Note 1: FCVs Are Mechanically Blocked Full Open.

Columbia Generating Station **Final Safety Analysis Report**	**Recirculation System Evaluation and Isometric**		
	Draw. No. **960690.07**	Rev.	Figure **5.4-1**

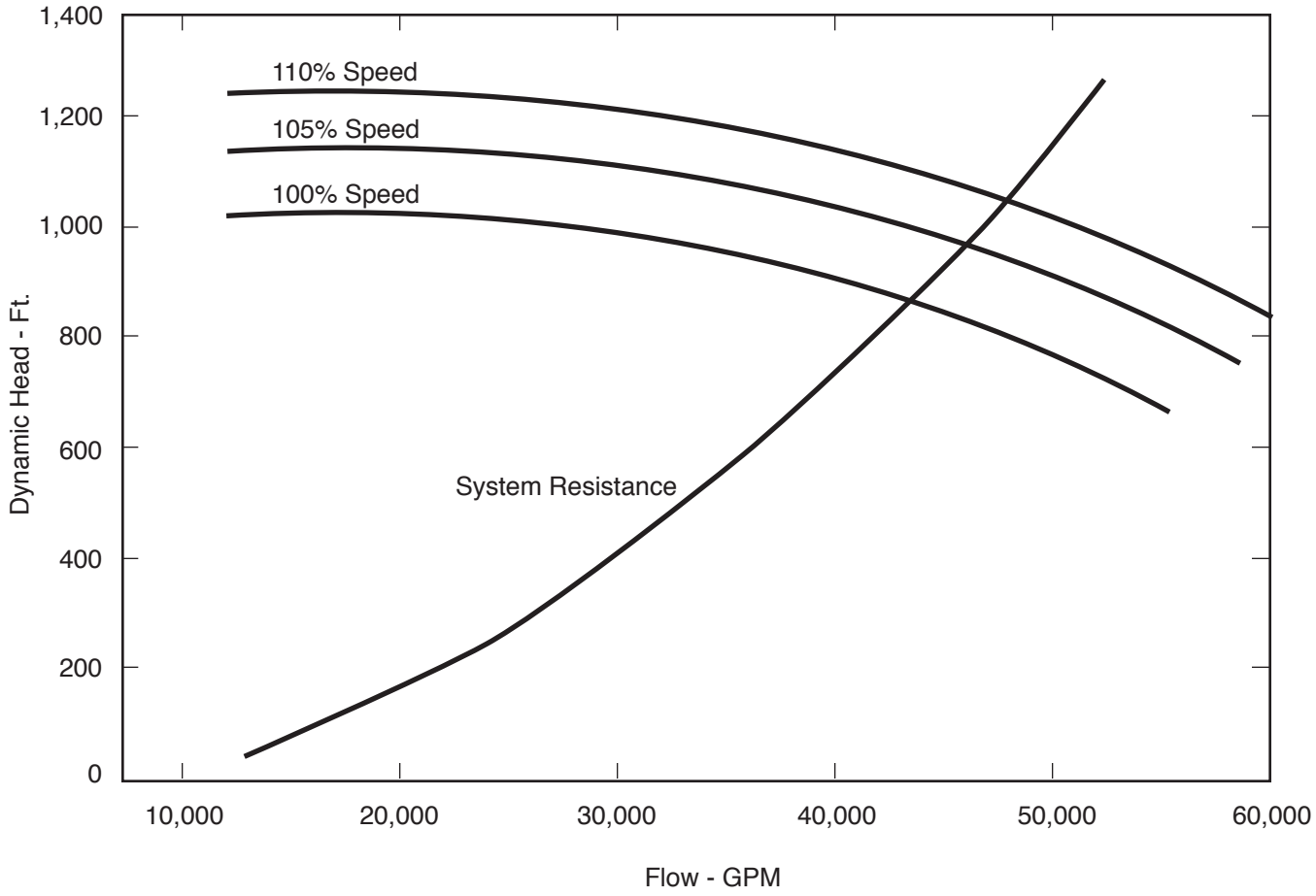

Columbia Generating Station
Final Safety Analysis Report

RRC Pump Dynamic Head-Flow Curve

Draw. No. 960690.05	Rev.	Figure 5.4-2

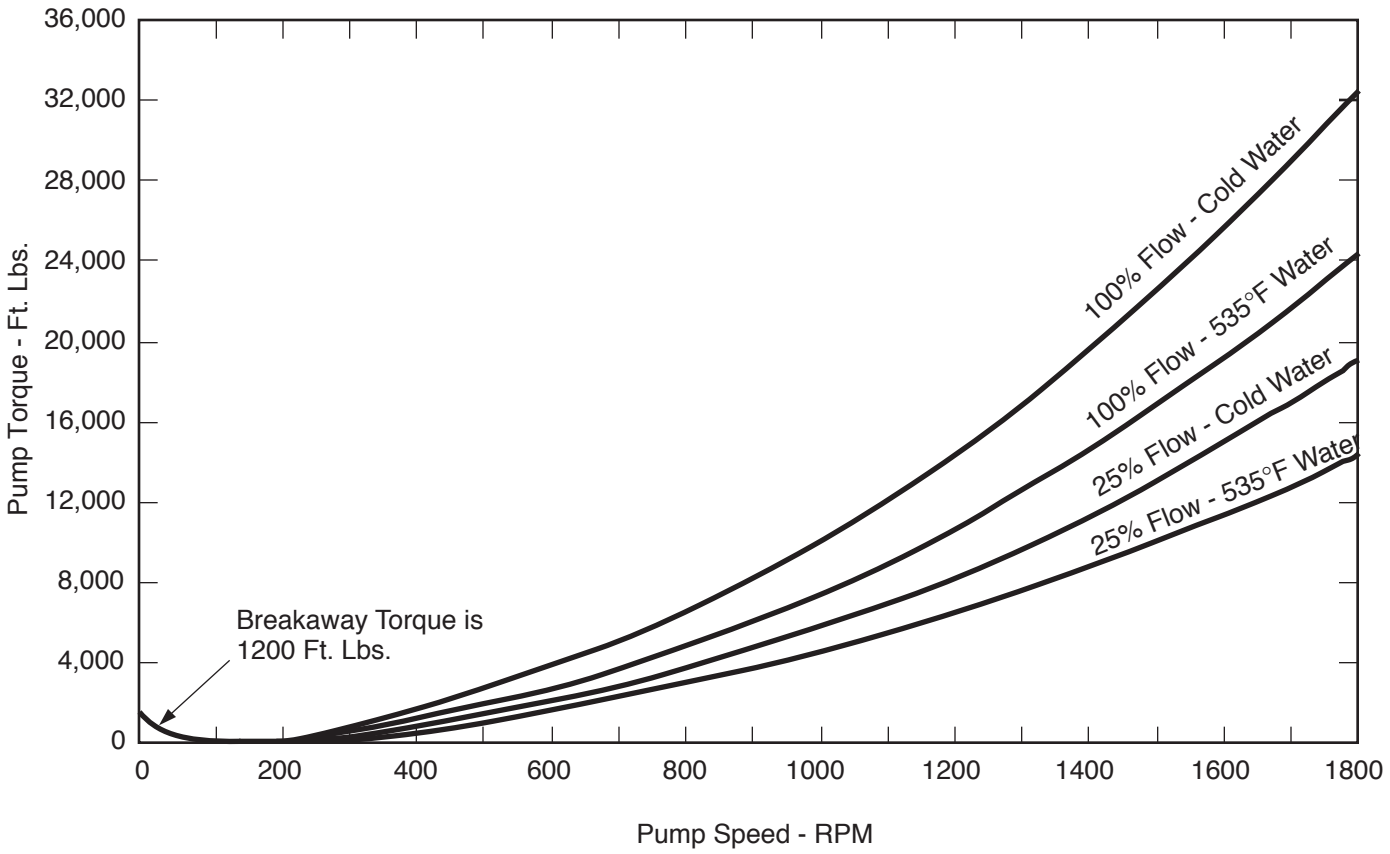

Columbia Generating Station **Final Safety Analysis Report**	**RRC Pump Speed - Torque Curve**		
	Draw. No. **960690.06**	Rev.	Figure **5.4-3**

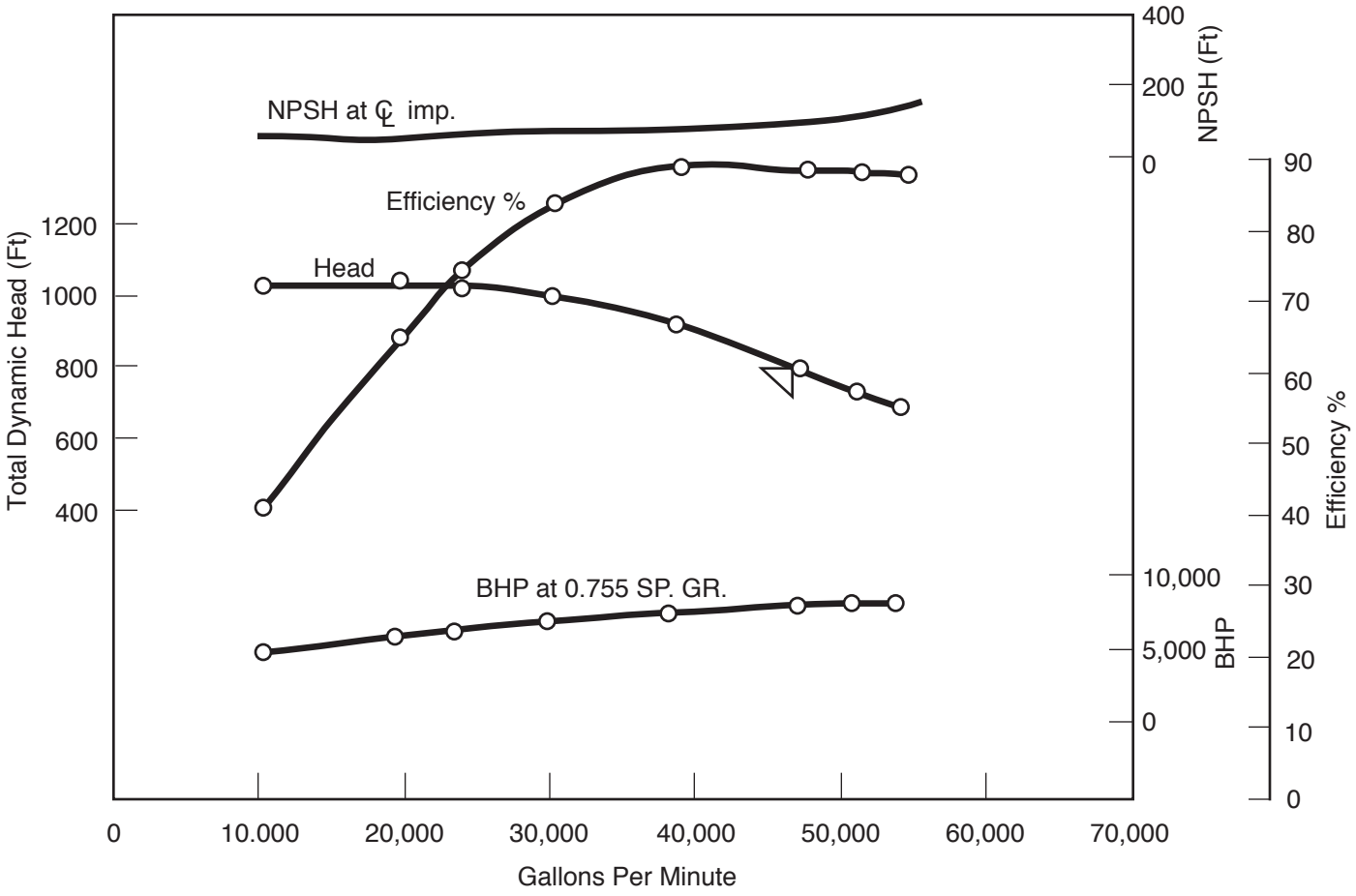

Columbia Generating Station Final Safety Analysis Report	Recirculation Pump Head, NPSH, Flow and Efficiency Curves		
	Draw. No. 960690.59	Rev.	Figure 5.4-4

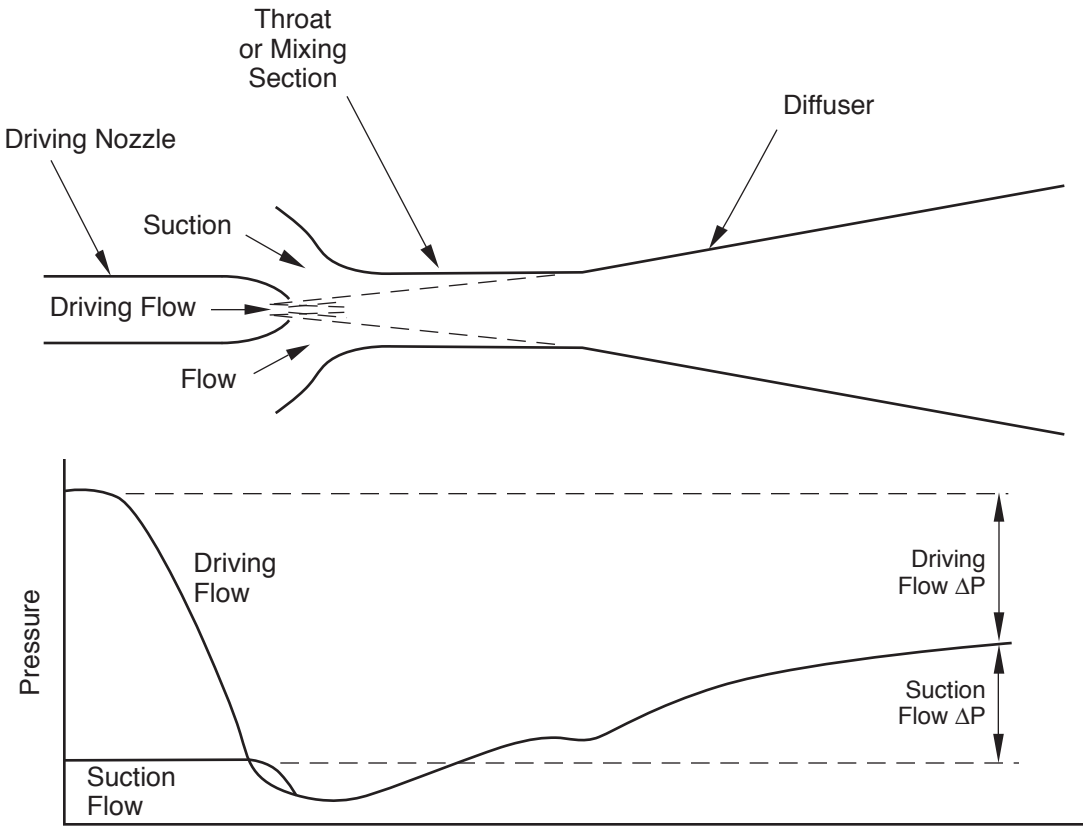

Columbia Generating Station **Final Safety Analysis Report**	**Operating Principle of Jet Pump**		
	Draw. No. **960690.58**	Rev.	Figure **5.4-5**

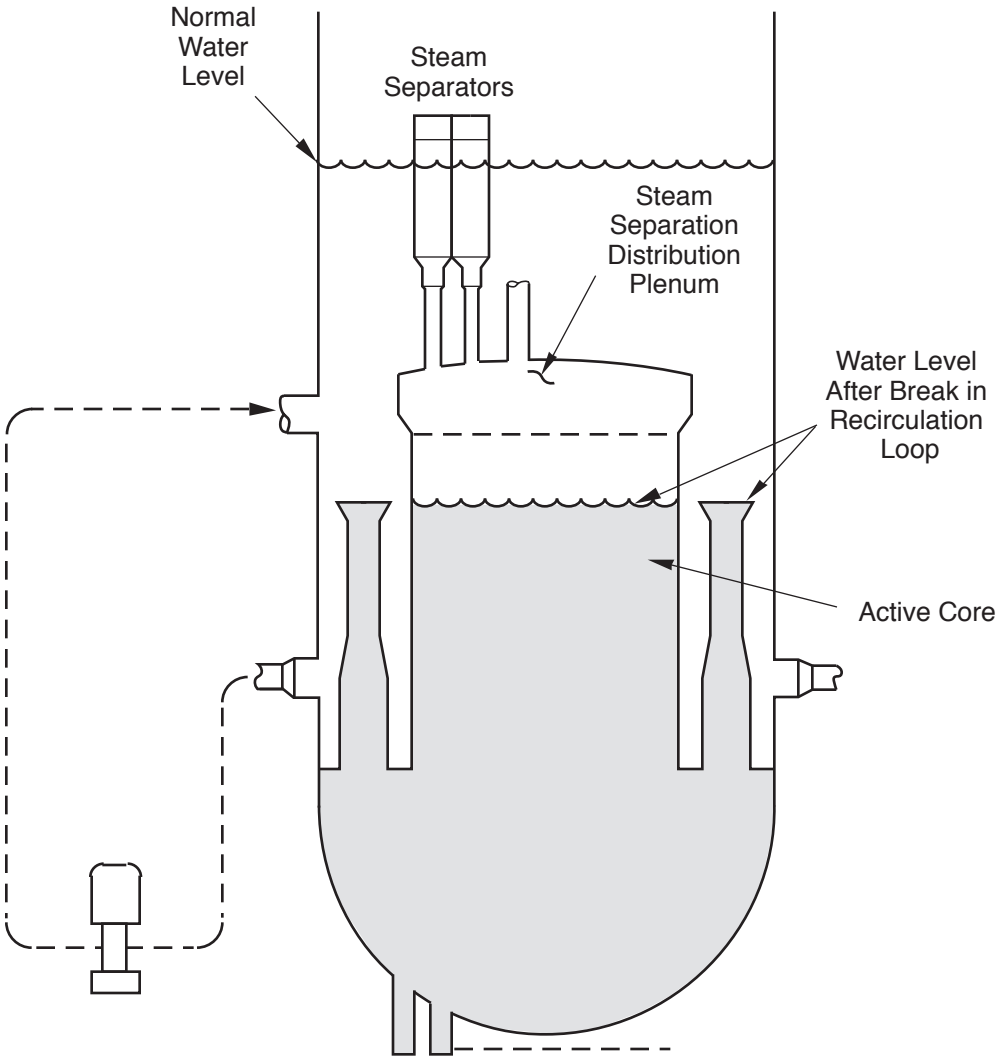

Columbia Generating Station
Final Safety Analysis Report

Core Flooding Capability of Recirculation System

Draw. No. 960690.60	Rev.	Figure 5.4-6

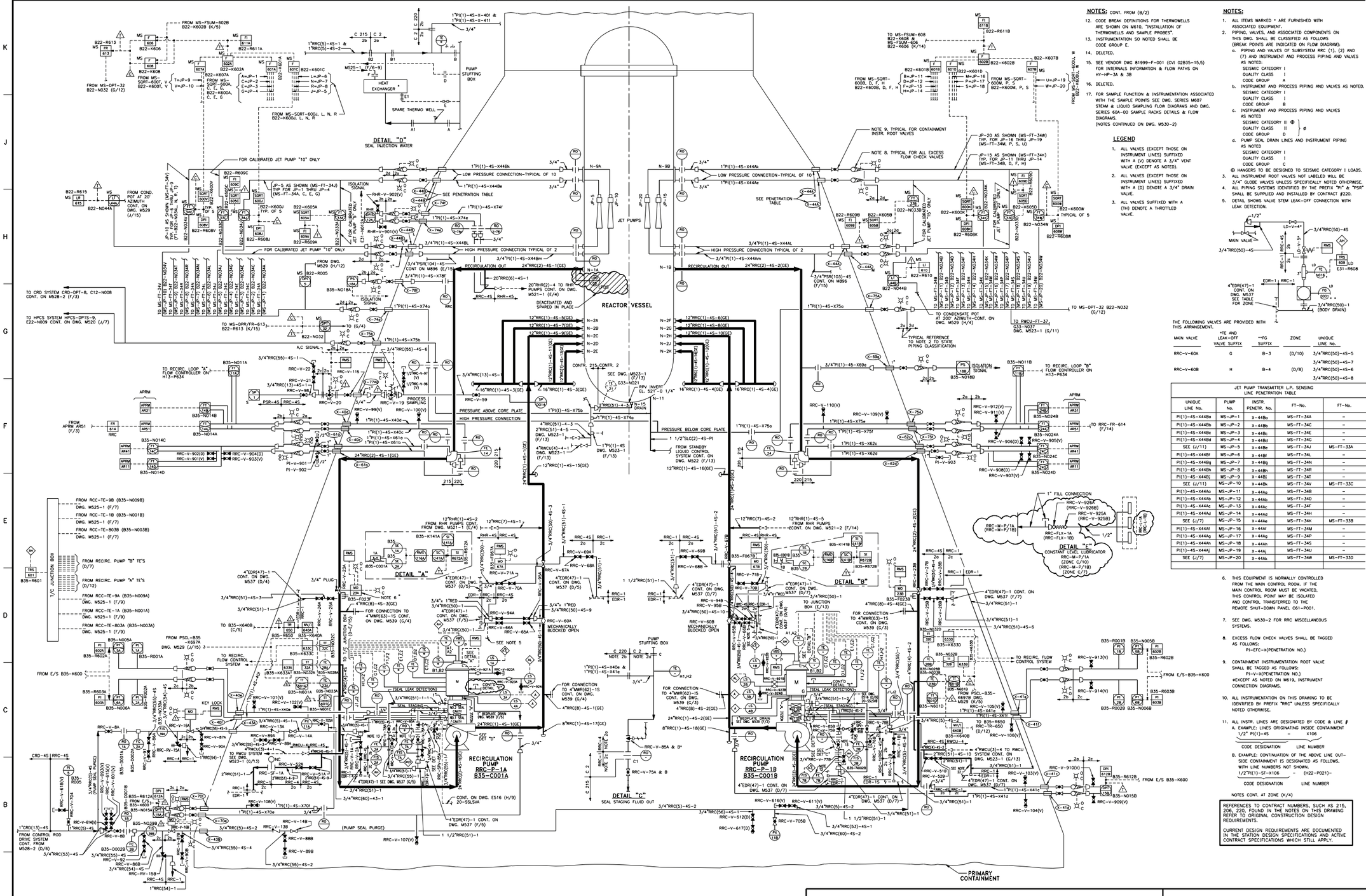
DETAIL "D"
SEAL INJECTION WATER
REACTOR VESSEL
RECIRCULATION PUMP
RRC-P-1A
B35-C001A
RECIRCULATION PUMP
RRC-P-1B
B35-C001B
DETAIL "A"
DETAIL "B"
DETAIL "C"
DETAIL "E"
CONSTANT LEVEL LUBRICATOR
(RRC-M-P/1A
(ZONE C/10)
(RRC-M-P/1B)
(ZONE C/7)
JET PUMPS
PRESSURE ABOVE CORE PLATE
HIGH PRESSURE CONNECTION
PRESSURE BELOW CORE PLATE
PRIMARY CONTAINMENT
JET PUMP "15" ONLY
FOR CALIBRATED JET PUMP "10" ONLY
LOW PRESSURE CONNECTION-TYPICAL OF 10
HIGH PRESSURE CONNECTION TYPICAL OF 2
SEE PENETRATION TABLE
RECIRCULATION OUT
DEACTIVATED AND SPARED IN PLACE
TYPICAL REFERENCE TO NOTE 2 TO STATE PIPING CLASSIFICATION
TO CONDENSATE AT 200' AZIMUTH-CONT. ON DWG. M529 (H/4)
TO RWCU-FT-37 G33-N037 DWG. M523-1 (G/11)
TO MS-DPT-32 B22-N032 (G/12)
FROM COND. POT AT 20° AZIMUTH CONT. ON DWG. M529 (J/15)
TO CRD SYSTEM CRD-DPT-8, C12-N008 CONT. ON M528-2 (F/3)
TO HPCS SYSTEM HPCS-DP15-9, E22-N009 CONT. ON DWG. M520 (J/7)
TO MS-DPR/FR-613 B22-R613 (K/15)
TO (G/4)
FROM APRM AR51 (F/3)
TO RECIRC. LOOP "A" FLOW CONTROLLER ON H13-P634
TO RECIRC. LOOP "B" FLOW CONTROLLER ON H13-P654
TO RRC-FR-614 (F/14)
FROM RCC-TE-9B (B35-N009B) DWG. M525-1 (F/7)
FROM RCC-TE-1B (B35-N001B) DWG. M525-1 (F/7)
FROM RCC-TE-803B (B35-N003B) DWG. M525-1 (F/7)
FROM RECIRC. PUMP "B" TE'S (D/7)
FROM RECIRC. PUMP "A" TE'S (D/12)
FROM RCC-TE-9A (B35-N009A) DWG. M525-1 (F/9)
FROM RCC-TE-1A (B35-N001A) DWG. M525-1 (F/9)
FROM RCC-TE-803A (B35-N003A) DWG. M525-1 (F/9)
1/2" MAIN VALVE
3/4"RRC(50)-4S
4"EDR(47)-1 CONT. ON DWG. M537 (D/4)
4"EDR(47)-1 CONT. ON DWG. M537 (D/5)
4"EDR(47)-1 CONT. ON DWG. M537 (F/5)
4"EDR(47)-1 CONT. ON DWG. M537 (F/7)
4"EDR(47)-1 CONT. ON DWG. M537 (D/6)
4"EDR(47)-1 CONT. ON DWG. M537 (D/7)
4"EDR(47)-1 CONT. ON DWG. M537 (G/6)
FOR CONNECTION TO 4"MWR(63)-15 CONT. ON DWG. M539 (G/4)
FOR CONNECTION TO 4"MWR(62)-15 CONT. ON DWG. M539 (G/3)
FOR CONNECTION TO 4"MWR(63)-15 CONT. ON DWG. M539 (G/3)
FOR CONNECTION TO 4"MWR(62)-15 CONT. ON DWG. M539 (G/4)
TO JUNCTION BOX (E/13)
TO RECIRC. FLOW CONTROL SYSTEM
FROM E/S B35-K600
FROM E/S B35-K600
FROM PSCL-B35-K697B DWG. M529 (K/5)
FROM PSCL-B35-K697A DWG. M529 (J/15)
TO RECIRC. FLOW CONTROL SYSTEM
KEY LOCK
CONT'D DETAIL "A"
CONT'D DETAIL "B"
CONT'D DETAIL "C"
REPLANT DRAIN INCL. M539 (F/3)
REPLANT DRAIN SEE DWG. M539 (F/2)
SEE DETAIL "A"
SEE DET "D"
SEE DET "C"
SEE DWG. M523-1 (F/13)
SEE DWG. M523-1 (G/13)
SEE DWG. M523-1 (F/13)
SEE DWG. M523-1 (F/13)
SEE DWG. M523-1 (F

RRC-IMD-ASD1A/1 (SEE NOTE 20)

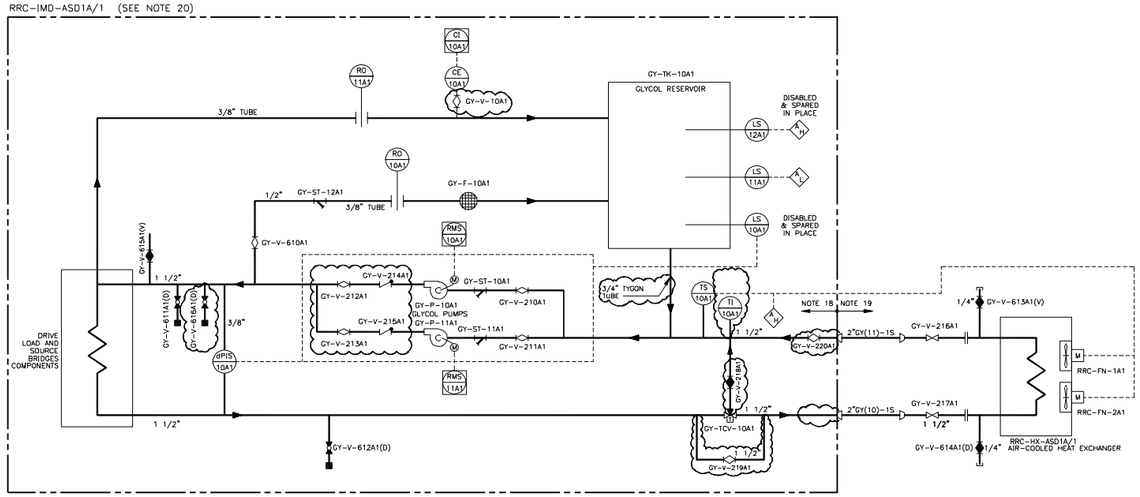

VENDOR LIQUID COOLING SKID

INDUCTION MOTOR DRIVES LIQUID COOLING SYSTEM – RRC PUMP ADJUSTABLE SPEED DRIVES
(SEE NOTES 20 & 21)

NOTES: (CONT. FROM M530-1)

18. ALL SYSTEM COMPONENTS, INCLUDING SUPPORTS, PIPING, AND EQUIPMENT REFERRING TO THIS NOTE SHALL BE CLASSIFIED AS FOLLOWS:
    SEISMIC CATEGORY II
    QUALITY CLASS 2

19. PIPING BETWEEN DRIVE COOLING SKID AND HEAT EXCHANGER IS:
    SEISMIC CATEGORY II
    QUALITY CLASS 2
    CODE GROUP D

20. EPN'S SHOWN ARE FOR ONE OF FOUR DRIVE LINEUPS. THE APPLICABLE SUFFIX FOR ALL EPN'S IS AS FOLLOWS:

	DRIVE	COMPONENT EPN
SHOWN –	RRC-IMD-ASD1A/1	GY-X-XXA1
	RRC-IMD-ASD1A/2	GY-X-XXA2
	RRC-IMD-ASD1B/1	GY-X-XXB1
	RRC-IMD-ASD1B/2	GY-X-XXB2

21. LIQUID COOLANT IS DISTILLED OR DE-IONIZED WATER AND PURE PROPYLENE GLYCOL. DO NOT USE RUST-INHIBITING GLYCOL SOLUTIONS.

22. PIPING IS BLANKED OFF DOWNSTREAM OF RRC-V-52B AND THAXTON EXPANDABLE PLUG IS INSTALLED BETWEEN VALVE AND PLATE.

23. DELETED

24. SEE DWG M507 FOR FLOW DIAGRAM LEGENDS, SYMBOLS AND ABBREVIATIONS.

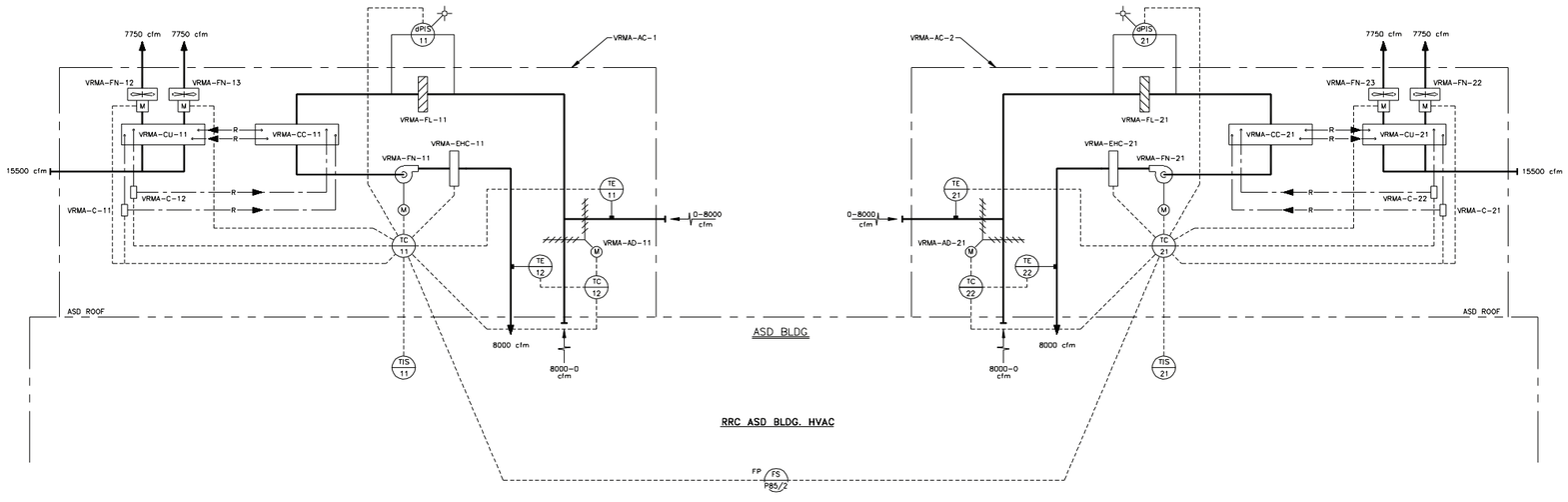

Columbia Generating Station
Final Safety Analysis Report

Reactor Recirculation System - P&ID

Draw. No. M530-2	Rev. 13	Figure 5.4-7.2

Form No. 960690ai

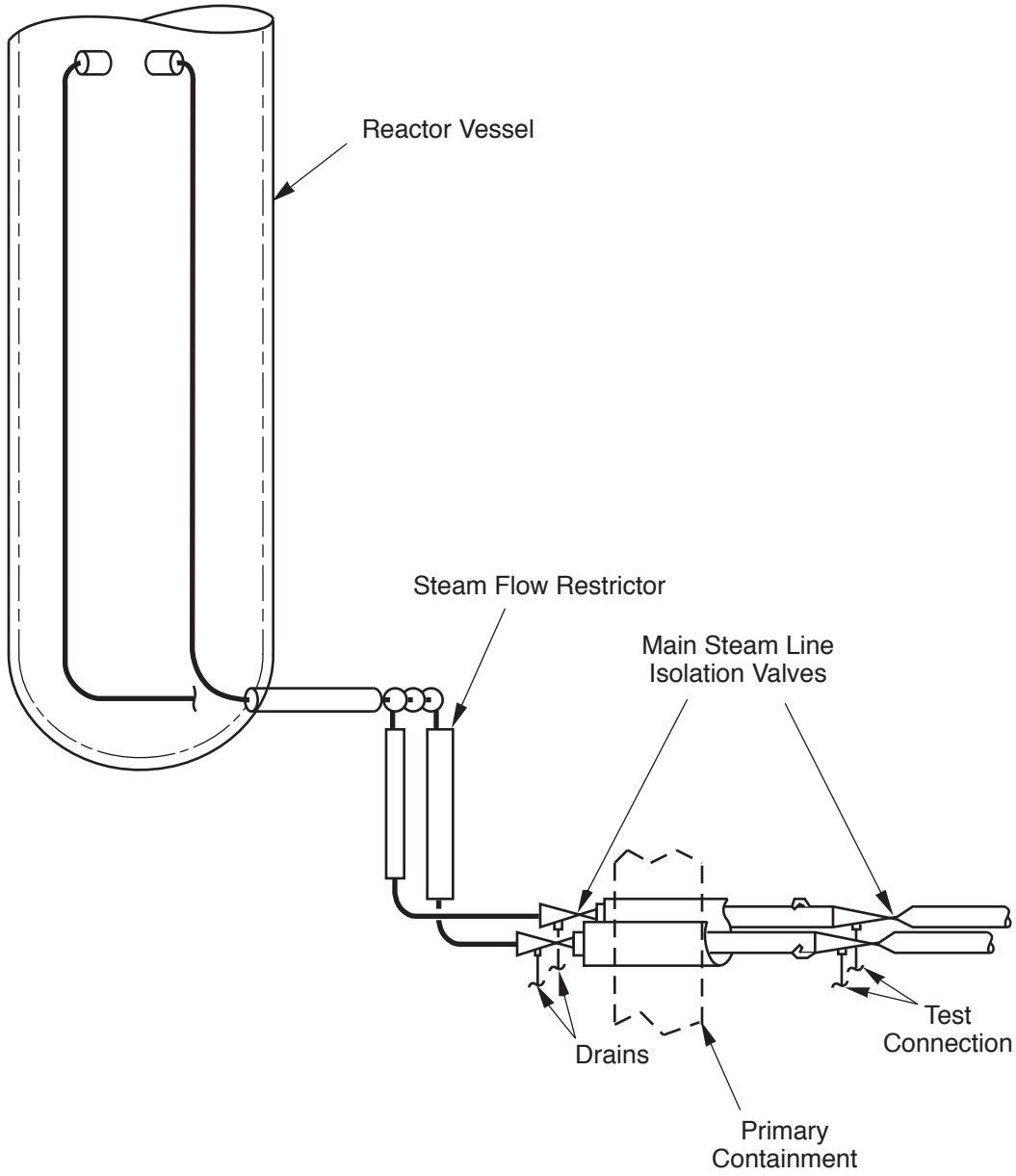

Columbia Generating Station
Final Safety Analysis Report

Main Steam Line Flow Restrictor Location

Draw. No. 960690.61	Rev.	Figure 5.4-8

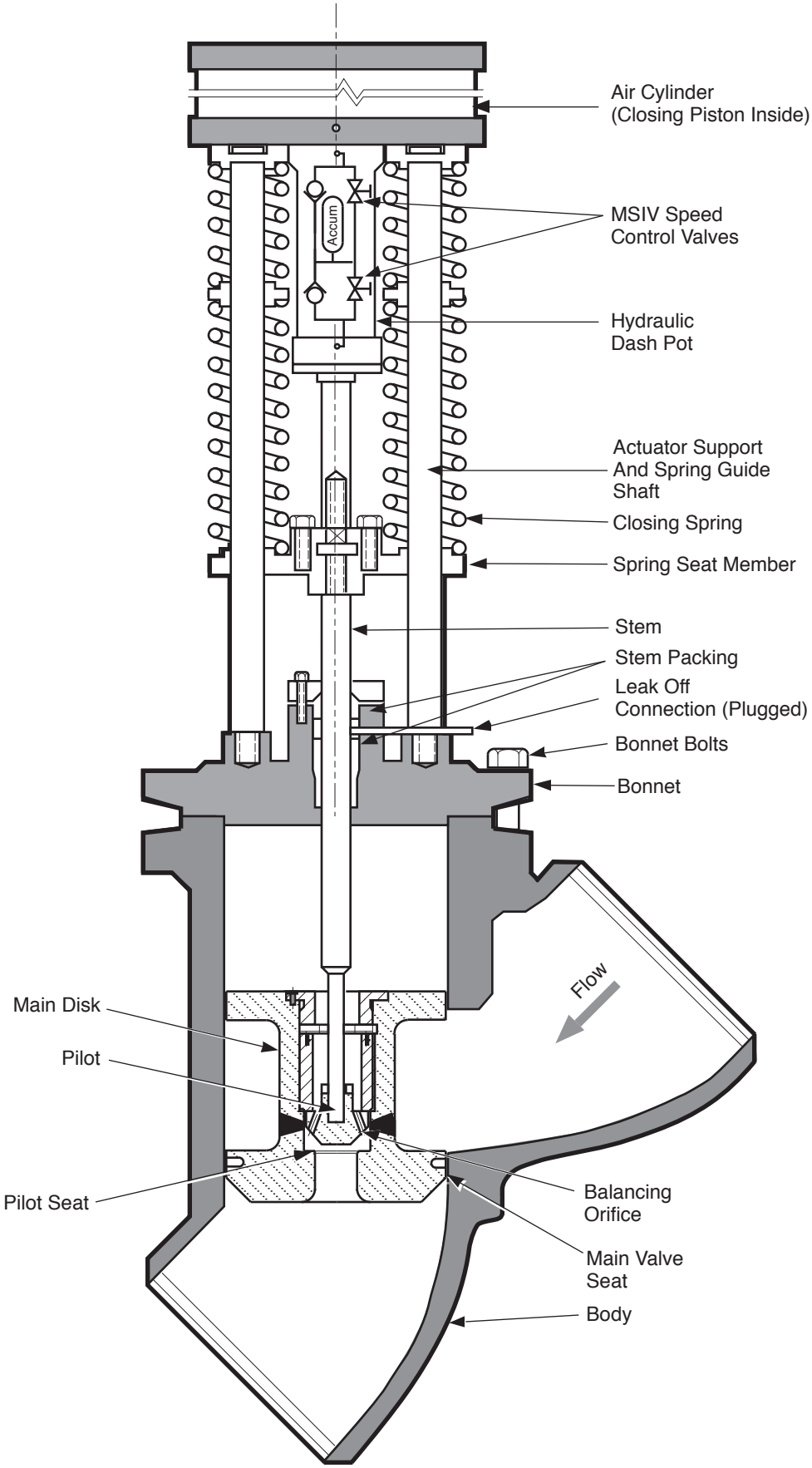

Columbia Generating Station
Final Safety Analysis Report

Main Steam Line Isolation Valve

Draw. No. 960690.84	Rev.	Figure 5.4-9

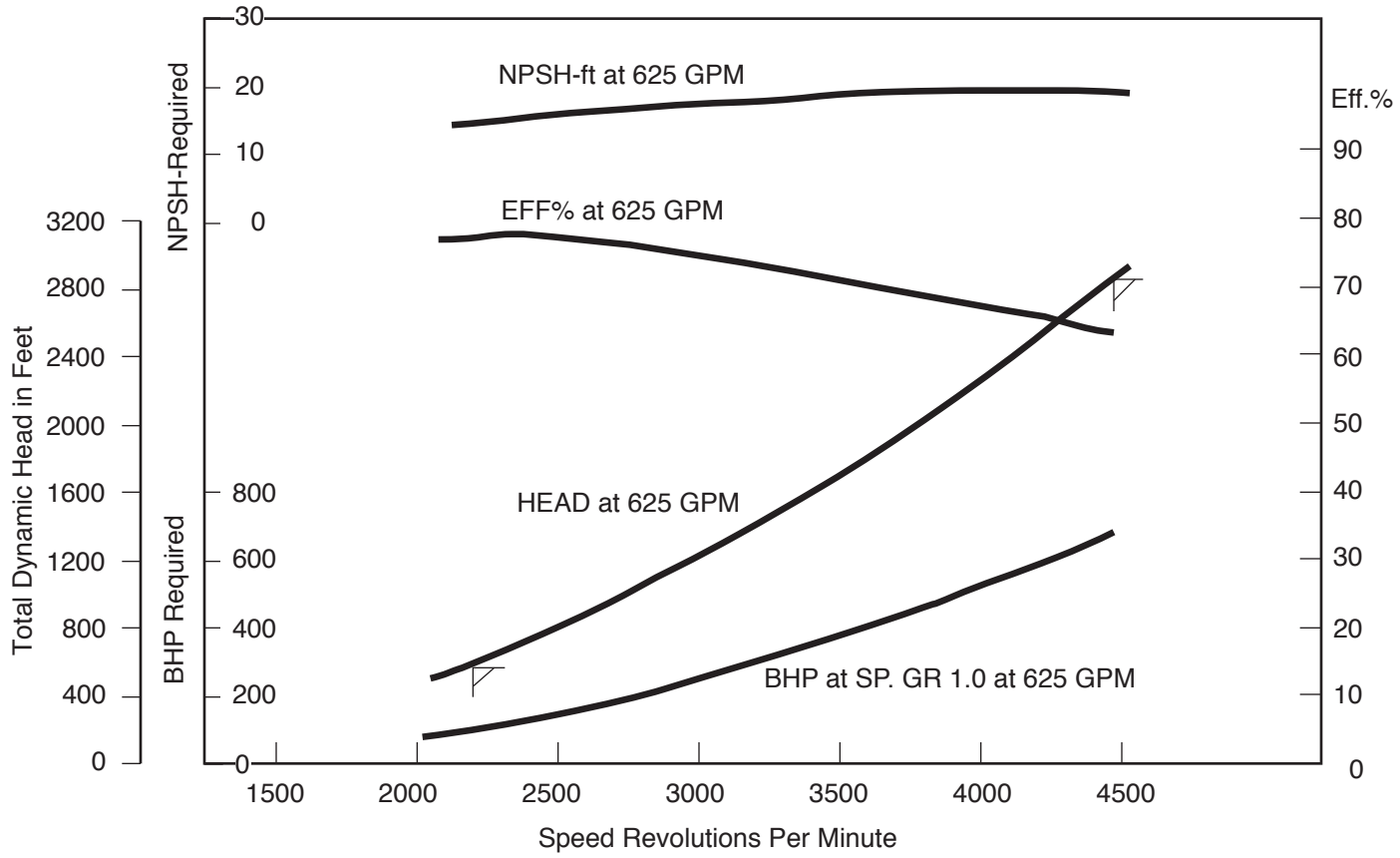

Witness Test Performance
Bingham-Willamette Co.
Portland, Oregon

Columbia Generating Station **Final Safety Analysis Report**	**RCIC Pump Performance Curve (Constant Flow)**		
	Draw. No. **960690.55**	Rev.	Figure **5.4-10**

Form No. 960690

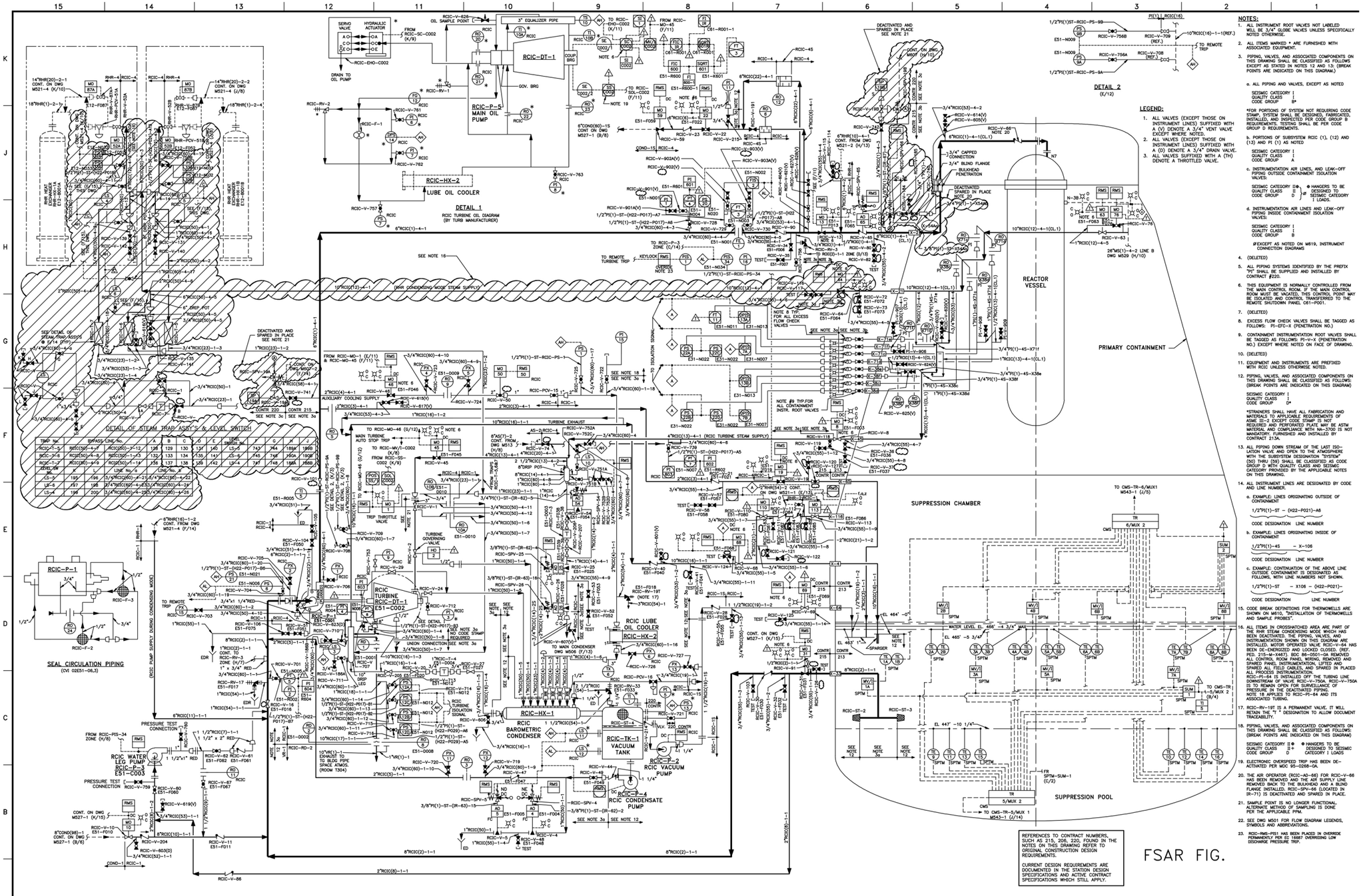

TRIP No.	BYPASS LINE No.	A	B	C	D	E	LEVEL SWITCH No.	G	H	I	J
RCIC-T-1	RCIC(80)-1-2	RCIC(60)-1-12	126	129	130	140	LS-6	743	744	189A	189B
RCIC-T-2	RCIC(80)-1-13	RCIC(60)-1-13	132	133	134	135	LS-5	745	746	190A	190B
RCIC-T-3	RCIC(80)-1-19	RCIC(60)-1-9	136	137	138	139	LS-4	747	748	188A	188B

LEVEL SW	X	Y	LINE No.	LINE No.
LS-5	195	196	3/4"RCIC(66)-4-21	4"RCIC(66)-4-22
LS-6	197	198	3/4"RCIC(67)-4-23	4"RCIC(67)-4-24
LS-4	199	200	3/4"RCIC(68)-4-25	4"RCIC(68)-4-26

(SEE NOTE 12 & 13)

LOCATION ⬡	1-2	3-3A	3A-4	7-2	8-8A	8A-9	3-12	12-13	13-14	15	17	18-2	19-19A	19A-6	20-20A	20A-1	10-11
PEAK PRESSURE PSIG	N/A	1481	1481	N/A	1337	1337	1481	N/A	N/A	N/A	N/A	N/A	1481	N/A	1481	N/A	160
RECOMMENDED DESIGN PRESSURE	100	1500	1500	100	1250	1250	1500	100	100	75	75	100	1500	100	1500	100	150
DESIGN TEMPERATURE °F	170	170	575	170	575	575	170	170	170	250	190	190	170	170	170	170	267
ESTIMATED LINE SIZE, IN.	6	6	6	6	10	4	2	2	2	1	1¼	2	2	2	4	4	10

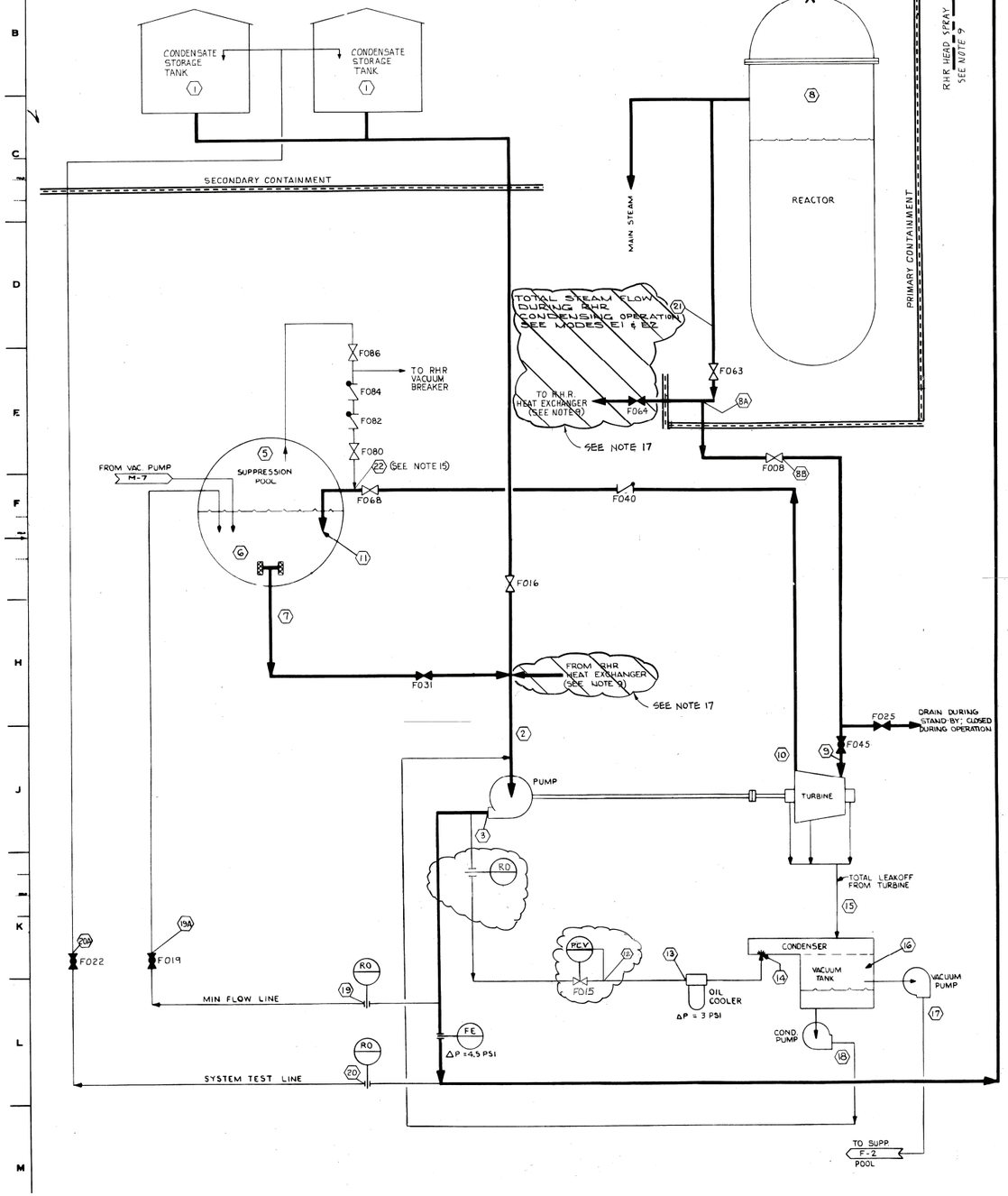

15. MAXIMUM LINEAR LENGTH BETWEEN POSITIONS ⑤ AND ㉒ EQUALS 60 FEET. THE INTERNAL CROSS-SECTIONAL AREA OF THE VACUUM BREAKER PIPING THAT IS SHARED BY THE RCIC AND RHR SHALL BE EQUAL TO OR GREATER THAN THE COMBINED INTERNAL CROSS-SECTIONAL AREAS OF THE INDIVIDUAL RCIC AND RHR VACUUM BREAKER LINES.
16. STEAM FLOWS FOR TEST MODE F AT POSITION 9, 10 AND 11 ARE BASED UPON A PUMP TDH OF 2490 FEET.
17. RHR STEAM CONDENSING MODE HAS BEEN DEACTIVATED. ONLY HIGH PRESSURE MODES WERE REVISED FOR RPV. MODES B&D WOULD NOT BE SIGNIFICANTLY AFFECTED.
18. [illegible]

12. DESIGN PRESSURES AND TEMPERATURES GIVEN ARE THE BASIS FOR DESIGN OF GE SUPPLIED EQUIPMENT. ESTIMATED LINE SIZES ARE FOR INFORMATION ONLY. ACTUAL LINE SIZES AS DETERMINED BY PIPING DESIGNER, SHALL MEET THE PROCESS DATA HYDRAULIC REQUIREMENTS.
13. "PEAK PRESSURE" IS THE MAXIMUM PRESSURE ANTICIPATED DURING A TRANSIENT PERIOD WITH ALL OF THE CONTRIBUTING ELEMENTS AT A MAXIMUM. IT WOULD BE EXPECTED TO OCCUR LESS THAN 1% OF SYSTEM OPERATING TIME.
14. FLOW VALUES SHOWN IN MODES C & D ARE BASED UPON SUCTION PIPING DESIGN PERMITTING THE MINIMUM REQUIRED NPSH TO CONTINUE TO BE PROVIDED TO THE RCIC PUMP WHEN THE SUPPRESSION POOL SUCTION STRAINER IS 50% PLUGGED.

✱ THE PRESSURE AT THIS LOCATION DEPENDS ON PIPING ARRANGEMENT, AND MAY BE VARIED WITHIN THE FOLLOWING LIMITS.

LOCATION

② MINIMUM NPSH AT PUMP SUCTION = 21 FEET
③ MAXIMUM PUMP TOTAL DYNAMIC HEAD 3016 FEET FOR MODES A & C 610 FEET FOR MODES B & D
⑨ MAXIMUM PRESSURE DROP BETWEEN LOCATION ⑧ AND ⑨ = 15 PSI (SEE NOTE 6)
⑩ MAXIMUM PRESSURE ALLOWED = 25 PSIA
⑬ MAXIMUM PRESSURE ALLOWED = 75 PSIA
⑮ SUFFICIENT VACUUM TO PREVENT TURBINE SHAFT-OUT-LEAKAGE.
⑰ MAXIMUM PRESSURE AVAILABLE = 25 PSIA
⑱ MAXIMUM PRESSURE AVAILABLE = 65 PSIA
⑲ SUFFICIENT PRESSURE TO RETURN TO SUPPRESSION POOL
⑳ SUFFICIENT PRESSURE TO RETURN TO COND. STORAGE

NOTES: MPL ITEM Nº: E51-1020

1. ATMOSPHERIC PRESSURE OF 14.7 PSIA WAS USED IN CALCULATIONS.
2. WATER FLOWS ARE SHOWN-IN-GPM, STEAM FLOWS IN 1000 LB/HR.
3. THE MAXIMUM POOL WATER TEMPERATURE FOR CONTINUOUS SYSTEM OPERATION WILL NOT EXCEED 140°F, HOWEVER, DUE TO POTENTIAL SHORT TERM OPERATION AT HIGHER TEMPERATURES, PIPING EXPANSION SHALL BE BASED ON 170°F.
4. THE UNRECOVERED FLOW NOZZLE PRESSURE DROP OF 4.5 PSI IS A FIXED LOSS BETWEEN LOCATIONS ③ AND ④
5. THE LUBE OIL COOLER PRESSURE DROP OF 3.0 PSI IS A FIXED LOSS BETWEEN LOCATIONS ⑬ AND ⑭
6. THE CONTROLLING MODES FOR LINE SIZING AND ARRANGEMENT ARE:
   - SUCTION FROM COND STORAGE - - - - - - - - - - - - - MODE A & B
   - SUCTION FROM SUPPRESSION POOL - - - - - - - - - - - MODE C & D
   - PUMP DISCHARGE- - - - - - - - - - - - - - - - - - - MODE C & D
   - STEAM SUPPLY- MODE A & B
   - TURBINE EXHAUST - - - - - - - - - - - - - - - - - - MODE A & C
   - TEST LINE - MODE F
   - COOLING SYSTEM- - - - - - - - - - - - - - - - - - - MODE A
7. SYSTEM OPERATION IS POSSIBLE WITH INTERMEDIATE PRESSURES IN THE REACTOR VESSEL AND THE SUPPRESSION POOL. HOWEVER, THESE CONDITIONS DO NOT CONTROL PIPE OR VALVE SIZING OR SPECIFICATION, AND NO DATA IS SHOWN.
8. PUMP MINIMUM FLOW REQUIREMENT MAY OCCUR DURING ANY OPERATING MODE. FLOW REQUIREMENT IS 75 GPM MINIMUM.
9. FOR VALVE AND FLOW INFORMATION, REFER TO THE RHR SYSTEM P&ID MPL E12-1010 AND PROCESS DIAGRAM MPL E12-1020.
10. DURING SYSTEM STANDBY, EQUIPMENT IS NOT OPERATING. INTERMITTENT FLOW OCCURS THROUGH THE STEAM SUPPLY LINE DRAIN TRAP SYSTEM AT 1000 PSIA AND 560°F.
11. HEAD SPRAY NOZZLE PRESSURE DROP IS 10 PSI.

MODE A — SUCTION FROM CONDENSATE STORAGE, REACTOR AT HIGH PRESSURE, SUPPRESSION POOL AT HIGH PRESS.

LOCATION ⬡	1	2	3	4	5	6	7	8	9	10	11	12	13	14	15	16	17	18	19	20
FLOW - SEE NOTE 2	—	600	625	600	—	—	—	0	—	3057	3057	3057	25	25	25	0.15	—	0.01	25	—	0
OPERATING PRESSURE - PSIA	14.7	✱	✱	1235	18	—	—	1225	✱	✱	19.9	75	✱	45	✱	9.8	✱	✱	✱	—	
EXPECTED TEMPERATURE °F	100	100	100	100	110	—	—	565	SAT	SAT	228	100	100	100	230	120	120	120	100	—	
MAX / MIN TEMPERATURE °F	100/40	100/40	100/40	100/40	170/40	—	—	570/70	570/70	250/70	250/70	100/40	100/40	100/40	250/40	190/40	190/40	190/40	100/40	—	

MODE B — SUCTION FROM CONDENSATE STORAGE, REACTOR AT LOW PRESSURE, SUPPRESSION POOL AT HIGH PRESS.

LOCATION ⬡	1	2	3	4	5	6	7	8	9	10	11	12	13	14	15	16	17	18	19	20
FLOW - SEE NOTE 2	—	600	616	600	—	—	0	—	9.30	9.15	9.15	16	16	16	0.15	—	0.01	16*	—	0
OPERATING PRESSURE - PSIA	14.7	✱	✱	178	18	—	—	165	✱	✱	19.8	75	✱	45	✱	9.8	✱	✱	✱	—	
EXPECTED TEMPERATURE °F	100	100	100	100	140	—	—	366	SAT	SAT	227	100	100	100	230	120	120	120	100	—	
MAX / MIN TEMPERATURE °F	100/40	100/40	100/40	100/40	170/40	—	—	366/70	366/70	250/70	250/70	100/40	100/40	100/40	250/40	190/40	190/40	190/40	100/40	—	

MODE C — SUCTION FROM SUPPRESSION POOL, REACTOR AT HIGH PRESSURE, SUPPRESSION POOL AT LOW PRESS.

LOCATION ⬡	1	2	3	4	5	6	7	8	9	10	11	12	13	14	15	16	17	18	19	20
FLOW - SEE NOTE 2	—	600	625	600	—	—	600	—	29.82	29.66	29.66	25	25	25	0.15	—	0.01	25*	—	0
OPERATING PRESSURE - PSIA	—	✱	✱	1235	14.7	19.2	18.8	1225	✱	✱	16.6	75	✱	45	✱	9.8	✱	✱	✱	—	
EXPECTED TEMPERATURE °F	—	140	140	140	140	140	140	565	SAT	SAT	218	140	140	140	230	160	160	160	140	—	
MAX / MIN TEMPERATURE °F	—	170/40	170/40	170/40	170/40	170/40	170/40	570/70	570/70	250/70	250/70	170/40	170/40	170/40	250/40	190/40	190/40	190/40	170/40	—	

MODE D — SUCTION FROM SUPPRESSION POOL, REACTOR AT LOW PRESSURE, SUPPRESSION POOL AT LOW PRESS.

LOCATION ⬡	1	2	3	4	5	6	7	8	9	10	11	12	13	14	15	16	17	18	19	20
FLOW - SEE NOTE 2	—	600	616	600	—	—	600	—	8.40	8.25	8.25	16	16	16	0.15	—	0.01	16*	—	0
OPERATING PRESSURE - PSIA	—	✱	✱	178	14.7	19.2	18.8	165	✱	✱	16.5	75	✱	45	✱	9.8	✱	✱	✱	—	
EXPECTED TEMPERATURE °F	—	140	140	140	140	140	140	366	SAT	SAT	218	140	140	140	230	160	160	160	140	—	
MAX / MIN TEMPERATURE °F	→	170/40	170/40	170/40	170/40	170/40	170/40	366/70	366/70	250/70	250/70	170/40	170/40	170/40	250/40	190/40	190/40	190/40	170/40	—	

SEE NOTE 17
MODE E-1 — SUCTION FROM RHR HEAT EXCHANGERS, REACTOR AT HIGH PRESS., SUPPRESS. POOL AT LOW PRESS.

LOCATION ⬡	1	2	3	4	5	6	7	8	9	10	11	12	13	14	15	16	17	18	19	20	21
FLOW - SEE NOTE 2	—	380	396	380	—	—	0	—	20.15	20.00	20.00	16	16	16	0.15	—	0.01	16*	—	0	297.3
OPERATING PRESSURE - PSIA	—	✱	✱	1025	14.7	—	—	1015	✱	✱	16.6	75	✱	45	✱	9.8	✱	✱	✱	—	1015
EXPECTED TEMPERATURE °F	—	140	140	140	140	—	—	560	SAT	SAT	218	140	140	140	230	160	160	160	140	—	560
MAX / MIN TEMPERATURE °F	100/40	170/40	170/40	170/40	170/40	—	—	560/70	560/70	250/70	250/70	170/40	170/40	170/40	250/40	190/40	190/40	190/40	170/40	—	560/70

SEE NOTE 17
MODE E-2 — SUCTION FROM RHR HEAT EXCHANGERS, REACTOR AT LOW PRESS, SUPPRESS. POOL AT LOW PRESS.

LOCATION ⬡	1	2	3	4	5	6	7	8	9	10	11	12	13	14	15	16	17	18	19	20	21
FLOW - SEE NOTE 2	—	215	231	215	—	—	0	—	5.15	5.00	5.00	16	16	16	0.15	—	0.01	16*	—	0	119.6
OPERATING PRESSURE - PSIA	—	✱	✱	163	14.7	—	—	150	✱	✱	16.6	75	✱	45	✱	9.8	✱	✱	✱	—	150
EXPECTED TEMPERATURE °F	—	140	140	140	140	—	—	358	SAT	SAT	218	140	140	140	230	160	160	160	140	—	358
MAX / MIN TEMPERATURE °F	100/40	170/40	170/40	170/40	170/40	—	—	358/70	560/70	250/70	250/70	170/40	170/40	170/40	250/40	190/40	190/40	190/40	170/40	—	358/70

(F)

MODE F — TEST MODE: SUCTION FROM CONDENSATE STORAGE, REACTOR AT HIGH PRESS., SUPPRESS POOL AT LOW PRESS.

LOCATION ⬡	1	2	3	4	5	6	7	8	9	10	11	12	13	14	15	16	17	18	19	20
FLOW-SEE NOTE 2	—	600	616	—	—	—	0	—	23.50	23.35	23.39	16	16	16	0.15	—	0.01	16*	—	600	
OPERATING PRESSURE - PSIA	14.7	✱	✱	—	14.7	—	—	1000	✱	✱	16.6	75	✱	45	✱	9.8	✱	✱	✱	✱	
EXPECTED TEMPERATURE °F	100	100	100	—	100	—	—	545	SAT	SAT	218	100	100	100	230	120	120	120	100	100	
MAX / MIN TEMPERATURE °F	100/40	100/40	100/40	—	170/40	—	—	545/70	545/70	250/70	250/70	100/40	100/40	100/40	250/40	120/40	120/40	120/40	100/40	100/40	

Columbia Generating Station
Final Safety Analysis Report

RCIC System Process Diagram

Draw. No. 02E51-04,4,1 | Rev. 10 | Figure 5.4-12

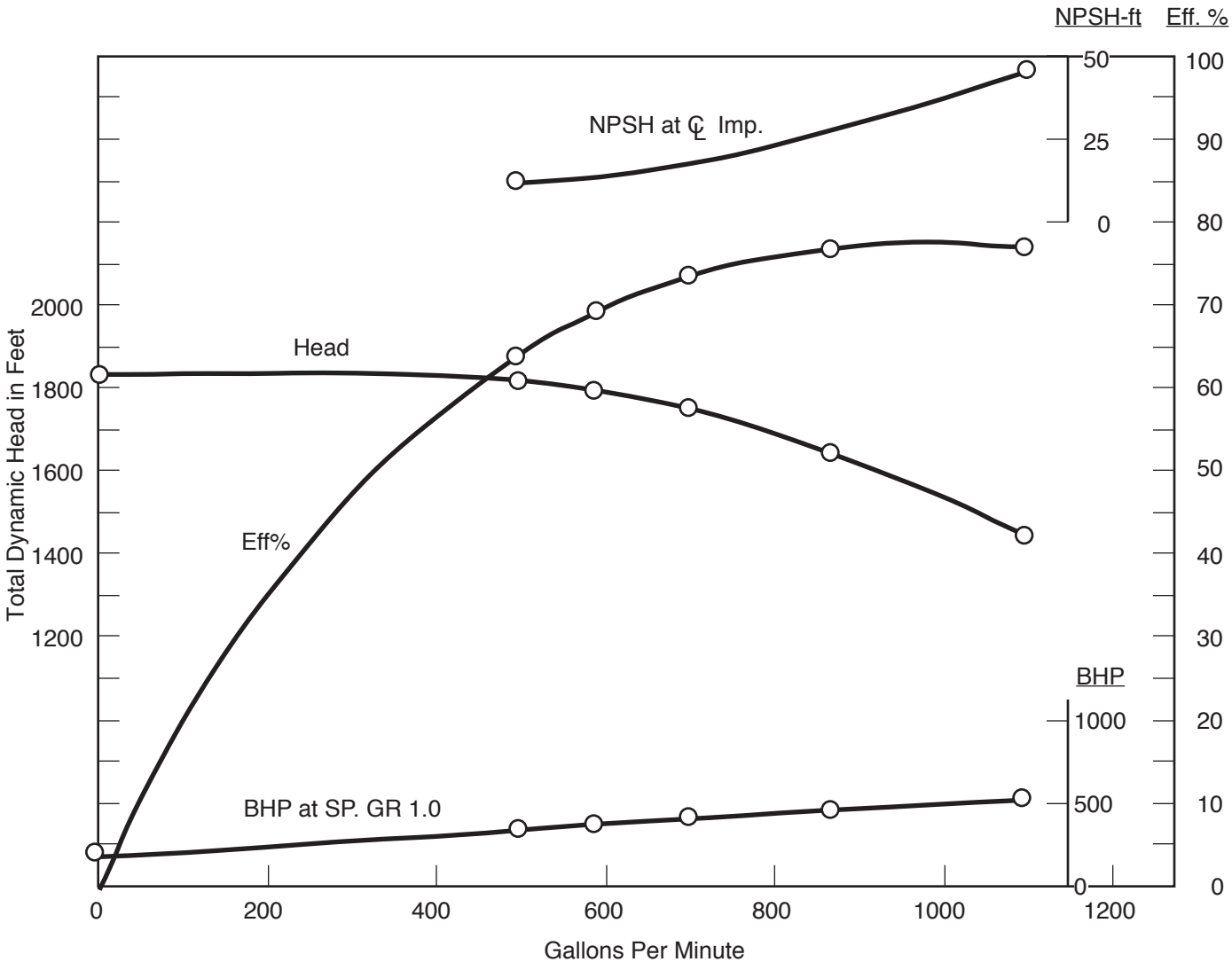

Test Speed RG. 3591-3585 RPM

Whitness Test Performance
Bingham-Willamette Co.
Portland, Oregon.

Columbia Generating Station **Final Safety Analysis Report**	**RCIC Pump Performance Curve**		
	Draw. No. **960690.86**	Rev.	Figure **5.4-13**

Measurements for Strainers at
Penetration X-33
Rated Flow: 600 gal/min

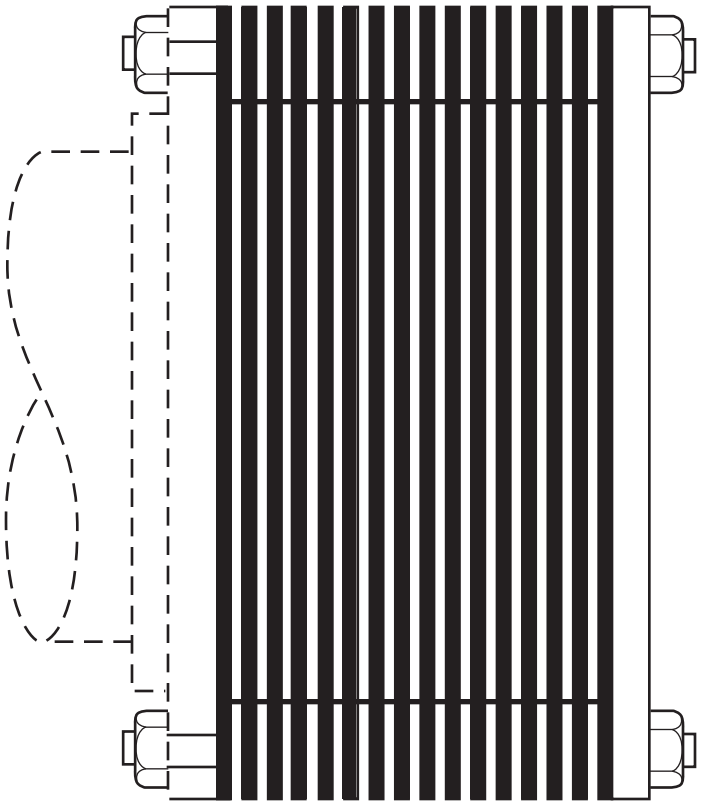

Notes:

1. Flow stated above is per penetration with two (2) units described above required per penetration.

2. Units are designed, manufactured and inspected in accordance with ASME Section III, Class 2 (not stamped) 1974 Ed. with Addenda thru Winter 1976.

3. Design temp: 220°F

Columbia Generating Station Final Safety Analysis Report	**Typical Strainer**		
	Draw. No. **960690.87**	Rev.	Figure **5.4-14**

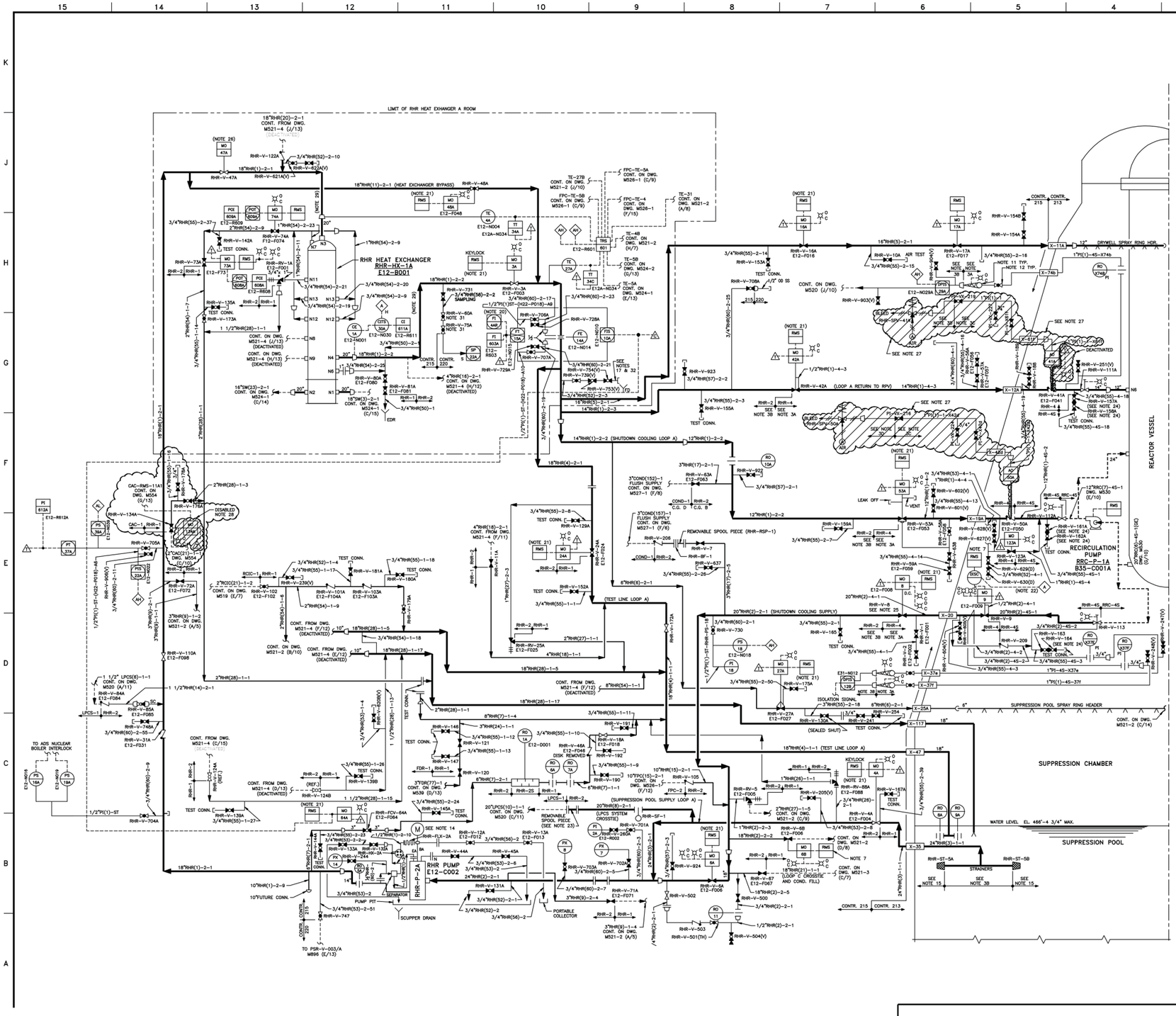
LIMIT OF RHR HEAT EXCHANGER A ROOM
RHR HEAT EXCHANGER
RHR-HX-1A
E12-B001
REACTOR VESSEL
SUPPRESSION CHAMBER
SUPPRESSION POOL
RHR PUMP
E12-C002
RHR-P-2A
RECIRCULATION PUMP
RRC-P-1A
B35-C001A
DRYWELL SPRAY RING HDR.
SUPPRESSION POOL SPRAY RING HEADER
STRAINERS
WATER LEVEL EL. 466'-4 3/4" MAX.
TEST LINE LOOP A
SHUTDOWN COOLING LOOP A
SUPPRESSION POOL SUPPLY LOOP A
LOOP 'C' CROSSTIE AND COND. FILL
LPCS SYSTEM CROSSTIE
REMOVABLE SPOOL PIECE (RHR-RSP-1)
REMOVABLE SPOOL PIECE (SEE NOTE 23)
DISABLED NOTE 38
SEALED SHUT
LEAK OFF
VENT
TEST CONN.
SCUPPER DRAIN
PORTABLE COLLECTOR
TO ADS NUCLEAR BOILER INTERLOCK
TO PSR-V-003/A M896 (E/13)
10"FUTURE CONN.
PUMP PIT
SEPARATOR
EDR
CONTR. 215
CONTR. 213
CONTR. 220
CONTR. 215 CONTR. 213
CONT. FROM DWG. M521-4 (C/15)
CONT. FROM DWG. M521-4 (F/12) (DEACTIVATED)
CONT. FROM DWG. M521-4 (D/13) (DEACTIVATED)
CONT. ON DWG. M521-4 (H/13) (DEACTIVATED)
CONT. ON DWG. M521-4 (H/12) (DEACTIVATED)
CONT. ON DWG. M521-2 (A/5)
CONT. ON DWG. M521-2 (C/14)
CONT. ON DWG. M521-3 (G/7)
CONT. ON DWG. M521-4 (F/12)
CONT. ON DWG. M520 (J/10)
CONT. ON DWG. M524-1 (C/14)
CONT. ON DWG. M524-1 (C/15)
CONT. ON DWG. M539 (D/13)
CONT. ON DWG. M526-1 (F/12)
CONT. ON DWG. M524-2 (A/13)
CONT. ON DWG. M524-2 (E/13)
CONT. ON DWG. M524-2 (H/13)
CONT. ON DWG. M524-2 (H/7)
CONT. ON DWG. M524-2 (G/13)
CONT. ON DWG. M524-3 (C/13)
CONT. ON DWG. M524-3 (C/15)
CONT. ON DWG. M524-3 (E/10)
CONT. ON DWG. M524-3 (E/12)
CONT. ON DWG. M524-3 (F/13)
CONT. ON DWG. M524-3 (G/13)
CONT. ON DWG. M524-3 (H/13)
CONT. ON DWG. M524-4 (C/10)
CONT. ON DWG. M524-4 (C/12)
CONT. ON DWG. M524-4 (D/13)
CONT. ON DWG. M524-4 (E/13)
CONT. ON DWG. M524-4 (F/13)
CONT. ON DWG. M524-4 (G/13)
CONT. ON DWG. M524-4 (H/13)
CONT. ON DWG. M524-4 (H/7)
CONT. ON DWG. M524-4 (J/13)
CONT. ON DWG. M524-4 (J/8)
CONT. ON DWG. M524-4 (J/9)
CONT. ON DWG. M524-4 (K/13)
CONT. ON DWG. M524-4 (K/8)
CONT. ON DWG. M524-4 (K/9)
CONT. ON DWG. M524-5 (A/13)
CONT. ON DWG. M524-5 (A/8)
CONT. ON DWG. M524-5 (B/13)
CONT. ON DWG. M524-5 (B/8)
CONT. ON DWG. M524-5 (C/13)
CONT. ON DWG. M524-5 (C/8)
CONT. ON DWG. M524-5 (D/13)
CONT. ON DWG. M524-5 (D/8)
CONT. ON DWG. M524-5 (E/13)
CONT. ON DWG. M524-5 (E/8)
CONT. ON DWG. M524-5 (F/13)
CONT. ON DWG. M524-5 (F/8)
CONT. ON DWG. M524-5 (G/13)
CONT. ON DWG. M524-5 (G/8)
CONT. ON DWG. M524-5 (H/13)
CONT. ON DWG. M524-5 (H/8)
CONT. ON DWG. M524-5 (J/13)
CONT. ON DWG. M524-5 (J/8)
CONT. ON DWG. M524-5 (K/13)
CONT. ON DWG. M524-5 (K/8)
CONT. ON DWG. M524-6 (A/13)
CONT. ON DWG. M524-6 (A/8)
CONT. ON DWG. M524-6 (B/13)
CONT. ON DWG. M524-6 (B/8)
CONT. ON DWG. M524-6 (C/13)
CONT. ON DWG. M524-6 (C/8)
CONT. ON DWG. M524-6 (D/13)
CONT. ON DWG. M524-6 (D/8)
CONT. ON DWG. M524-6 (E/13)
CONT. ON DWG. M524-6 (E/8)
CONT. ON DWG. M524-6 (F/13)
CONT. ON DWG. M524-6 (F/8)
CONT. ON DWG. M524-6 (G/13)
CONT. ON DWG. M524-6 (G/8)
CONT. ON DWG. M524-6 (H/13)
CONT. ON DWG. M524-6 (H/8)
CONT. ON DWG. M524-6 (J/13)
CONT. ON DWG. M524-6 (J/8)
CONT. ON DWG. M524-6 (K/13)
CONT. ON DWG. M524-6 (K/8)
CONT. ON DWG. M524-7 (A/13)
CONT. ON DWG. M524-7 (A/8)
CONT. ON DWG. M524-7 (B/13)
CONT. ON DWG. M524-7 (B/8)
CONT. ON DWG. M524-7 (C/13)
CONT. ON DWG. M524-7 (C/8)
CONT. ON DWG. M524-7 (D/13)
CONT. ON DWG. M524-7 (D/8)
CONT. ON DWG. M524-7 (E/13)
CONT. ON DWG. M524-7 (E/8)
CONT. ON DWG. M524-7 (F/13)
CONT. ON DWG. M524-7 (F/8)
CONT. ON DWG. M524-7 (G/13)
CONT. ON DWG. M524-7 (G/8)
CONT. ON DWG. M524-7 (H/13)
CONT. ON DWG. M524-7 (H/8)
CONT. ON DWG. M524-7 (J/13)
CONT. ON DWG. M524-7 (J/8)
CONT. ON DWG. M524-7 (K/13)
CONT. ON DWG. M524-7 (K/8)
CONT. ON DWG. M524-8 (A/13)
CONT. ON DWG. M524-8 (A/8)
CONT. ON DWG. M524-8 (B/13)
CONT. ON DWG. M524-8 (B/8)
CONT. ON DWG. M524-8 (C/13)
CONT. ON DWG. M524-8 (C/8)
CONT. ON DWG. M524-8 (D/13)
CONT. ON DWG. M524-8 (D/8)
CONT. ON DWG. M524-8 (E/13)
CONT. ON DWG. M524-8 (E/8)
CONT. ON DWG. M524-8 (F/13)
CONT. ON DWG. M524-8 (F/8)
CONT. ON DWG. M524-8 (G/13)
CONT. ON DWG. M524-8 (G/8)
CONT. ON DWG. M524-8 (H/13)
CONT. ON DWG. M524-8 (H/8)
CONT. ON DWG. M524-8 (J/13)
CONT. ON DWG. M524-8 (J/8)
CONT. ON DWG. M524-8 (K/13)
CONT. ON DWG. M524-8 (K/8)
CONT. ON DWG. M524-9 (A/13)
CONT. ON DWG. M524-9 (A/8)
CONT. ON DWG. M524-9 (B/13)
CONT. ON DWG. M524-9 (B/8)
CONT. ON DWG. M524-9 (C/13)
CONT. ON DWG. M524-9 (C/8)
CONT. ON DWG. M524-9 (D/13)
CONT. ON DWG. M524-9 (D/8)
CONT. ON DWG. M524-9 (E/13)
CONT. ON DWG. M524-9 (E/8)
CONT. ON DWG. M524-9 (F/13)
CONT. ON DWG. M524-9 (F/8)
CONT. ON DWG. M524-9 (G/13)
CONT. ON DWG. M524-9 (G/8)
CONT. ON DWG. M524-9 (H/13)
CONT. ON DWG. M524-9 (H/8)
CONT. ON DWG. M524-9 (J/13)
CONT. ON DWG. M524-9 (J/8)
CONT. ON DWG. M524-9 (K/13)
CONT. ON DWG. M524-9 (K/8)
CONT. ON DWG. M524-10 (A/13)
CONT. ON DWG. M524-10 (A/8)
CONT. ON DWG. M524-10 (B/13)
CONT. ON DWG. M524-10 (B/8)
CONT. ON DWG. M524-10 (C/13)
CONT. ON DWG. M524-10 (C/8)
CONT. ON DWG. M524-10 (D/13)
CONT. ON DWG. M524-10 (D/8)
CONT. ON DWG. M524-10 (E/13)
CONT. ON DWG. M524-10 (E/8)
CONT. ON DWG. M524-10 (F/13)
CONT. ON DWG. M524-10 (F/8)
CONT. ON DWG. M524-10 (G/13)
CONT. ON DWG. M524-10 (G/8)
CONT. ON DWG. M524-10 (H/13)
CONT. ON DWG. M524-10 (H/8)
CONT. ON DWG. M524-10 (J/13)
CONT. ON DWG. M524-10 (J/8)
CONT. ON DWG. M524-10 (K/13)
CONT. ON DWG. M524-10 (K/8)
CONT. ON DWG. M524-11 (A/13)
CONT. ON DWG. M524-11 (A/8)
CONT. ON DWG. M524-11 (B/13)
CONT. ON DWG. M524-11 (B/8)
CONT. ON DWG. M524-11 (C/13)
CONT. ON DWG. M524-11 (C/8)
CONT. ON DWG. M524-11 (D/13)
CONT. ON DWG. M524-11 (D/8)
CONT. ON DWG. M524-11 (E/13)
CONT. ON DWG. M524-11 (E/8)
CONT. ON DWG. M524-11 (F/13)
CONT. ON DWG. M524-11 (F/8)
CONT. ON DWG. M524-11 (G/13)
CONT. ON DWG. M524-11 (G/8)
CONT. ON DWG. M524-11 (H/13)
CONT. ON DWG. M524-11 (H/8)
CONT. ON DWG. M524-11 (J/13)
CONT. ON DWG. M524-11 (J/8)
CONT. ON DWG. M524-11 (K/13)
CONT. ON DWG. M524-11 (K/8)
CONT. ON DWG. M524-12 (A/13)
CONT. ON DWG. M524-12 (A/8)
CONT. ON DWG. M524-12 (B/13)
CONT. ON DWG. M524-12 (B/8)
CONT. ON DWG. M524-12 (C/13)
CONT. ON DWG. M524-12 (C/8)
CONT. ON DWG. M524-12 (D/13)
CONT. ON DWG. M524-12 (D/8)
CONT. ON DWG. M524-12 (E/13)
CONT. ON DWG. M524-12 (E/8)
CONT. ON DWG. M524-12 (F/13)
CONT. ON DWG. M524-12 (F/8)
CONT. ON DWG. M524-12 (G/13)
CONT. ON DWG. M524-12 (G/8)
CONT. ON DWG. M524-12 (H/13)
CONT. ON DWG. M524-12 (H/8)
CONT. ON DWG. M524-12 (J/13)
CONT. ON DWG. M524-12 (J/8)
CONT. ON DWG. M524-12 (K/13)
CONT. ON DWG. M524-12 (K/8)
CONT. ON DWG. M524-13 (A/13)
CONT. ON DWG. M524-13 (A/8)
CONT. ON DWG. M524-13 (B/13)
CONT. ON DWG. M524-13 (B/8)
CONT. ON DWG. M524-13 (C/13)
CONT. ON DWG. M524-13 (C/8)
CONT. ON DWG. M524-13 (D/13)
CONT. ON DWG. M524-13 (D/8)
CONT. ON DWG. M524-13 (E/13)
CONT. ON DWG. M524-13 (E/8)
CONT. ON DWG. M524-13 (F/13)
CONT. ON DWG. M524-13 (F/8)
CONT. ON DWG. M524-13 (G/13)
CONT. ON DWG. M524-13 (G/8)
CONT. ON DWG. M524-13 (H/13)
CONT. ON DWG. M524-13 (H/8)
CONT. ON DWG. M524-13 (J/13)
CONT. ON DWG. M524-13 (J/8)
CONT. ON DWG. M524-13 (K/13)
CONT. ON DWG. M524-13 (K/8)
CONT. ON DWG. M524-14 (A/13)
CONT. ON DWG. M524-14 (A/8)
CONT. ON DWG. M524-14 (B/13)
CONT. ON DWG. M524-14 (B/8)
CONT. ON DWG. M524-14 (C/13)
CONT. ON DWG. M524-14 (C/8)
CONT. ON DWG. M524-14 (D/13)
CONT. ON DWG. M524-14 (D/8)
CONT. ON DWG. M524-14 (E/13)
CONT. ON DWG. M524-14 (E/8)
CONT. ON DWG. M524-14 (F/13)
CONT. ON DWG. M524-14 (F/8)
CONT. ON DWG. M524-14 (G/13)
CONT. ON DWG. M524-14 (G/8)
CONT. ON DWG. M524-14 (H/13)
CONT. ON DWG. M524-14 (H/8)
CONT. ON DWG. M524-14 (J/13)
CONT. ON DWG. M524-14 (J/8)
CONT. ON DWG. M524-14 (K/13)
CONT. ON DWG. M524-14 (K/8)
CONT. ON DWG. M524-15 (A/13)
CONT. ON DWG. M524-15 (A/8)
CONT. ON DWG. M524-15 (B/13)
CONT. ON DWG. M524-15 (B/8)
CONT. ON DWG. M524-15 (C/13)
CONT. ON DWG. M524-15 (C/8)
CONT. ON DWG. M524-15 (D/13)
CONT. ON DWG. M524-15 (D/8)
CONT. ON DWG. M524-15 (E/13)
CONT. ON DWG. M524-15 (E/8)
CONT. ON DWG. M524-15 (F/13)
CONT. ON DWG. M524-15 (F/8)
CONT. ON DWG. M524-15 (G/13)
CONT. ON DWG. M524-15 (G/8)
CONT. ON DWG. M524-15 (H/13)
CONT. ON DWG. M524-15 (H/8)
CONT. ON DWG. M524-15 (J/13)
CONT. ON DWG. M524-15 (J/8)
CONT. ON DWG. M524-15 (K/13)
CONT. ON DWG. M524-15 (K/8)
CONT. ON DWG. M524-16 (A/13)
CONT. ON DWG. M524-16 (A/8)
CONT. ON DWG. M524-16 (B/13)
CONT. ON DWG. M524-16 (B/8)
CONT. ON DWG. M524-16 (C/13)
CONT. ON DWG. M524-16 (C/8)
CONT. ON DWG. M524-16 (D/13)
CONT. ON DWG. M524-16 (D/8)
CONT. ON DWG. M524-16 (E/13)
CONT. ON DWG. M524-16 (E/8)
CONT. ON DWG. M524-16 (F/13)
CONT. ON DWG. M524-16 (F/8)
CONT. ON DWG. M524-16 (G/13)
CONT. ON DWG. M524-16 (G/8)
CONT. ON DWG. M524-16 (H/13)
CONT. ON DWG. M524-16 (H/8)
CONT. ON DWG. M524-16 (J/13)
CONT. ON DWG. M524-16 (J/8)
CONT. ON DWG. M524-16 (K/13)
CONT. ON DWG. M524-16 (K/8)
CONT. ON DWG. M524-17 (A/13)
CONT. ON DWG. M524-17 (A/8)
CONT. ON DWG. M524-17 (B/13)
CONT. ON DWG. M524-17 (B/8)
CONT. ON DWG. M524-17 (C/13)
CONT. ON DWG. M524-17 (C/8)
CONT. ON DWG. M524-17 (D/13)
CONT. ON DWG. M524-17 (D/8)
CONT. ON DWG. M524-17 (E/13)
CONT. ON DWG. M524-17 (E/8)
CONT. ON DWG. M524-17 (F/13)
CONT. ON DWG. M524-17 (F/8)
CONT. ON DWG. M524-17 (G/13)
CONT. ON DWG. M524-17 (G/8)
CONT. ON DWG. M524-17 (H/13)
CONT. ON DWG. M524-17 (H/8)
CONT. ON DWG. M524-17 (J/13)
CONT. ON DWG. M524-17 (J/8)
CONT. ON DWG. M524-17 (K/13)
CONT. ON DWG. M524-17 (K/8)
CONT. ON DWG. M524-18 (A/13)
CONT. ON DWG. M524-18 (A/8)
CONT. ON DWG. M524-18 (B/13)
CONT. ON DWG. M524-18 (B/8)
CONT. ON DWG. M524-18 (C/13)
CONT. ON DWG. M524-18 (C/8)
CONT. ON DWG. M524-18 (D/13)
CONT. ON DWG. M524-18 (D/8)
CONT. ON DWG. M524-18 (E/13)
CONT. ON DWG. M524-18 (E/8)
CONT. ON DWG. M524-18 (F/13)
CONT. ON DWG. M524-18 (F/8)
CONT. ON DWG. M524-18 (G/13)
CONT. ON DWG. M524-18 (G/8)
CONT. ON DWG. M524-18 (H/13)
CONT. ON DWG. M524-18 (H/8)
CONT. ON DWG. M524-18 (J/13)
CONT. ON DWG. M524-18 (J/8)
CONT. ON DWG. M524-18 (K/13)
CONT. ON DWG. M524-18 (K/8)
CONT. ON DWG. M524-19 (A/13)
CONT. ON DWG. M524-19 (A/8)
CONT. ON DWG. M524-19 (B/13)
CONT. ON DWG. M524-19 (B/8)
CONT. ON DWG. M524-19 (C/13)
CONT. ON DWG. M524-19 (C/8)
CONT. ON DWG. M524-19 (D/13)
CONT. ON DWG. M524-19 (D/8)
CONT. ON DWG. M524-19 (E/13)
CONT. ON DWG. M524-19 (E/8)
CONT. ON DWG. M524-19 (F/13)
CONT. ON DWG. M524-19 (F/8)
CONT. ON DWG. M524-19 (G/13)
CONT. ON DWG. M524-19 (G/8)
CONT. ON DWG. M524-19 (H/13)
CONT. ON DWG. M524-19 (H/8)
CONT. ON DWG. M524-19 (J/13)
CONT. ON DWG. M524-19 (J/8)
CONT. ON DWG. M524-19 (K/13)
CONT. ON DWG. M524-19 (K/8)
CONT. ON DWG. M524-20 (A/13)
CONT. ON DWG. M524-20 (A/8)
CONT. ON DWG. M524-20 (B/13)
CONT. ON DWG. M524-20 (B/8)
CONT. ON DWG. M524-20 (C/13)
CONT. ON DWG. M524-20 (C/8)
CONT. ON DWG. M524-20 (D/13)
CONT. ON DWG. M524-20 (D/8)
CONT. ON DWG. M524-20 (E/13)
CONT. ON DWG. M524-20 (E/8)
CONT. ON DWG. M524-20 (F/13)
CONT. ON DWG. M524-20 (F/8)
CONT. ON DWG. M524-20 (G/13)
CONT. ON DWG. M524-20 (G/8)
CONT. ON DWG. M524-20 (H/13)
CONT. ON DWG. M524-20 (H/8)
CONT. ON DWG. M524-20 (J/13)
CONT. ON DWG. M524-20 (J/8)
CONT. ON DWG. M524-20 (K/13)
CONT. ON DWG. M524-20 (K/8)
CONT. ON DWG. M524-21 (A/13)
CONT. ON DWG. M524-21 (A/8)
CONT. ON DWG. M524-21 (B/13)
CONT. ON DWG. M524-21 (B/8)
CONT. ON DWG. M524-21 (C/13)
CONT. ON DWG. M524-21 (C/8)
CONT. ON DWG. M524-21 (D/13)
CONT. ON DWG. M524-21 (D/8)
CONT. ON DWG. M524-21 (E/13)
CONT. ON DWG. M524-21 (E/8)
CONT. ON DWG. M524-21 (F/13)
CONT. ON DWG. M524-21 (F/8)
CONT. ON DWG. M524-21 (G/13)
CONT. ON DWG. M524-21 (G/8)
CONT. ON DWG. M524-21 (H/13)
CONT. ON DWG. M524-21 (H/8)
CONT. ON DWG. M524-21 (J/13)
CONT. ON DWG. M524-21 (J/8)
CONT. ON DWG. M524-21 (K/13)
CONT. ON DWG. M524-21 (K/8)
CONT. ON DWG. M524-22 (A/13)
CONT. ON DWG. M524-22 (A/8)
CONT. ON DWG. M524-22 (B/13)
CONT. ON DWG. M524-22 (B/8)
CONT. ON DWG. M524-22 (C/13)
CONT. ON DWG. M524-22 (C/8)
CONT. ON DWG. M524-22 (D/13)
CONT. ON DWG. M524-22 (D/8)
CONT. ON DWG. M524-22 (E/13)
CONT. ON DWG. M524-22 (E/8)
CONT. ON DWG. M524-22 (F/13)
CONT. ON DWG. M524-22 (F/8)
CONT. ON DWG. M524-22 (G/13)
CONT. ON DWG. M524-22 (G/8)
CONT. ON DWG. M524-22 (H/13)
CONT. ON DWG. M524-22 (H/8)
CONT. ON DWG. M524-22 (J/13)
CONT. ON DWG. M524-22 (J/8)
CONT. ON DWG. M524-22 (K/13)
CONT. ON DWG. M524-22 (K/8)
CONT. ON DWG. M524-23 (A/13)
CONT. ON DWG. M524-23 (A/8)
CONT. ON DWG. M524-23 (B/13)
CONT. ON DWG. M524-23 (B/8)
CONT. ON DWG. M524-23 (C/13)
CONT. ON DWG. M524-23 (C/8)
CONT. ON DWG. M524-23 (D/13)
CONT. ON DWG. M524-23 (D/8)
CONT. ON DWG. M524-23 (E/13)
CONT. ON DWG. M524-23 (E/8)
CONT. ON DWG. M524-23 (F/13)
CONT. ON DWG. M524-23 (F/8)
CONT. ON DWG. M524-23 (G/13)
CONT. ON DWG. M524-23 (G/8)
CONT. ON DWG. M524-23 (H/13)
CONT. ON DWG. M524-23 (H/8)
CONT. ON DWG. M524-23 (J/13)
CONT. ON DWG. M524-23 (J/8)
CONT. ON DWG. M524-23 (K/13)
CONT. ON DWG. M524-23 (K/8)
CONT. ON DWG. M524-24 (A/13)
CONT. ON DWG. M524-24 (A/8)
CONT. ON DWG. M524-24 (B/13)
CONT. ON DWG. M524-24 (B/8)
CONT. ON DWG. M524-24 (C/13)
CONT. ON DWG. M524-24 (C/8)
CONT. ON DWG. M524-24 (D/13)
CONT. ON DWG. M524-24 (D/8)
CONT. ON DWG. M524-24 (E/13)
CONT. ON DWG. M524-24 (E/8)
CONT. ON DWG. M524-24 (F/13)
CONT. ON DWG. M524-24 (F/8)
CONT. ON DWG. M524-24 (G/13)
CONT. ON DWG. M524-24 (G/8)
CONT. ON DWG. M524-24 (H/13)
CONT. ON DWG. M524-24 (H/8)
CONT. ON DWG. M524-24 (J/13)
CONT. ON DWG. M524-24 (J/8)
CONT. ON DWG. M524-24 (K/13)
CONT. ON DWG. M524-24 (K/8)
CONT. ON DWG. M524-25 (A/13)
CONT. ON DWG. M524-25 (A/8)
CONT. ON DWG. M524-25 (B/13)
CONT. ON DWG. M524-25 (B/8)
CONT. ON DWG. M524-25 (C/13)
CONT. ON DWG. M524-25 (C/8)
CONT. ON DWG. M524-25 (D/13)
CONT. ON DWG. M524-25 (D/8)
CONT. ON DWG. M524-25 (E/13)
CONT. ON DWG. M524-25 (E/8)
CONT. ON DWG. M524-25 (F/13)
CONT. ON DWG. M524-25 (F/8)
CONT. ON DWG. M524-25 (G/13)
CONT. ON DWG. M524-25 (G/8)
CONT. ON DWG. M524-25 (H/13)
CONT. ON DWG. M524-25 (H/8)
CONT. ON DWG. M524-25 (J/13)
CONT. ON DWG. M524-25 (J/8)
CONT. ON DWG. M524-25 (K/13)
CONT. ON DWG. M524-25 (K/8)
CONT. ON DWG. M524-26 (A/13)
CONT. ON DWG. M524-26 (A/8)
CONT. ON DWG. M524-26 (B/13)
CONT. ON DWG. M524-26 (B/8)
CONT. ON DWG. M524-26 (C/13)
CONT. ON DWG. M524-26 (C/8)
CONT. ON DWG. M524-26 (D/13)
CONT. ON DWG. M524-26 (D/8)
CONT. ON DWG. M524-26 (E/13)
CONT. ON DWG. M524-26 (E/8)
CONT. ON DWG. M524-26 (F/13)
CONT. ON DWG. M524-26 (F/8)
CONT. ON DWG. M524-26 (G/13)
CONT. ON DWG. M524-26 (G/8)
CONT. ON DWG. M524-26 (H/13)
CONT. ON DWG. M524-26 (H/8)
CONT. ON DWG. M524-26 (J/13)
CONT. ON DWG. M524-26 (J/8)
CONT. ON DWG. M524-26 (K/13)
CONT. ON DWG. M524-26 (K/8)
CONT. ON DWG. M524-27 (A/13)
CONT. ON DWG. M524-27 (A/8)
CONT. ON DWG. M524-27 (B/13)
CONT. ON DWG. M524-27 (B/8)
CONT. ON DWG. M524-27 (C/13)
CONT. ON DWG. M524-27 (C/8)
CONT. ON DWG. M524-27 (D/13)
CONT. ON DWG. M524-27 (D/8)
CONT. ON DWG. M524-27 (E/13)
CONT. ON DWG. M524-27 (E/8)
CONT. ON DWG. M524-27 (F/13)
CONT. ON DWG. M524-27 (F/8)
CONT. ON DWG. M524-27 (G/13)
CONT. ON DWG. M524-27 (G/8)
CONT. ON DWG. M524-27 (H/13)
CONT. ON DWG. M524-27 (H/8)
CONT. ON DWG. M524-27 (J/13)
CONT. ON DWG. M524-27 (J/8)
CONT. ON DWG. M524-27 (K/13)
CONT. ON DWG. M524-27 (K/8)
CONT. ON DWG. M524-28 (A/13)
CONT. ON DWG. M524-28 (A/8)
CONT. ON DWG. M524-28 (B/13)
CONT. ON DWG. M524-28 (B/8)
CONT. ON DWG. M524-28 (C/13)
CONT. ON DWG. M524-28 (C/8)
CONT. ON DWG. M524-28 (D/13)
CONT. ON DWG. M524-28 (D/8)
CONT. ON DWG. M524-28 (E/13)
CONT. ON DWG. M524-28 (E/8)
CONT. ON DWG. M524-28 (F/13)
CONT. ON DWG. M524-28 (F/8)
CONT. ON DWG. M524-28 (G/13)
CONT. ON DWG. M524-28 (G/8)
CONT. ON DWG. M524-28 (H/13)
CONT. ON DWG. M524-28 (H/8)
CONT. ON DWG. M524-28 (J/13)
CONT. ON DWG. M524-28 (J/8)
CONT. ON DWG. M524-28 (K/13)
CONT. ON DWG. M524-28 (K/8)
CONT. ON DWG. M524-29 (A/13)
CONT. ON DWG. M524-29 (A/8)
CONT. ON DWG. M524-29 (B/13)
CONT. ON DWG. M524-29 (B/8)
CONT. ON DWG. M524-29 (C/13)
CONT. ON DWG. M524-29 (C/8)
CONT. ON DWG. M524-29 (D/13)
CONT. ON DWG. M524-29 (D/8)
CONT. ON DWG. M524-29 (E/13)
CONT. ON DWG. M524-29 (E/8)
CONT. ON DWG. M524-29 (F/13)
CONT. ON DWG. M524-29 (F/8)
CONT. ON DWG. M524-29 (G/13)
CONT. ON DWG. M524-29 (G/8)
CONT. ON DWG. M524-29 (H/13)
CONT. ON DWG. M524-29 (H/8)
CONT. ON DWG. M524-29 (J/13)
CONT. ON DWG. M524-29 (J/8)
CONT. ON DWG. M524-29 (K/13)
CONT. ON DWG. M524-29 (K/8)
CONT. ON DWG. M524-30 (A/13)
CONT. ON DWG. M524-30 (A/8)
CONT. ON DWG. M524-30 (B/13)
CONT. ON DWG. M524-30 (B/8)
CONT. ON DWG. M524-30 (C/13)
CONT. ON DWG. M524-30 (C/8)
CONT. ON DWG. M524-30 (D/13)
CONT. ON DWG. M524-30 (D/8)
CONT. ON DWG. M524-30 (E/13)
CONT. ON DWG. M524-30 (E/8)
CONT. ON DWG. M524-30 (F/13)
CONT. ON DWG. M524-30 (F/8)
CONT. ON DWG. M524-30 (G/13)
CONT. ON DWG. M524-30 (G/8)
CONT. ON DWG. M524-30 (H/13)
CONT. ON DWG. M524-30 (H/8)
CONT. ON DWG. M524-30 (J/13)
CONT. ON DWG. M524-30 (J/8)
CONT. ON DWG. M524-30 (K/13)
CONT. ON DWG. M524-30 (K/8)
CONT. ON DWG. M524-31 (A/13)
CONT. ON DWG. M524-31 (A/8)
CONT. ON DWG. M524-31 (B/13)
CONT. ON DWG. M524-31 (B/8)
CONT. ON DWG. M524-31 (C/13)
CONT. ON DWG. M524-31 (C/8)
CONT. ON DWG. M524-31 (D/13)
CONT. ON DWG. M524-31 (D/8)
CONT. ON DWG. M524-31 (E/13)
CONT. ON DWG. M524-31 (E/8)
CONT. ON DWG. M524-31 (F/13)
CONT. ON DWG. M524-31 (F/8)
CONT. ON DWG. M524-31 (G/13)
CONT. ON DWG. M524-31 (G/8)
CONT. ON DWG. M524-31 (H/13)
CONT. ON DWG. M524-31 (H/8)
CONT. ON DWG. M524-31 (J/13)
CONT. ON DWG. M524-31 (J/8)
CONT. ON DWG. M524-31 (K/13)
CONT. ON DWG. M524-31 (K/8)
CONT. ON DWG. M524-32 (A/13)
CONT. ON DWG. M524-32 (A/8)
CONT. ON DWG. M524-32 (B/13)
CONT. ON DWG. M524-32 (B/8)
CONT. ON DWG. M524-32 (C/13)
CONT. ON DWG. M524-32 (C/8)
CONT. ON DWG. M524-32 (D/13)
CONT. ON DWG. M524-32 (D/8)
CONT. ON DWG. M524-32 (E/13)
CONT. ON DWG. M524-32 (E/8)
CONT. ON DWG. M524-32 (F/13)
CONT. ON DWG. M524-32 (F/8)
CONT. ON DWG. M524-32 (G/13)
CONT. ON DWG. M524-32 (G/8)
CONT. ON DWG. M524-32 (H/13)
CONT. ON DWG. M524-32 (H/8)
CONT. ON DWG. M524-32 (J/13)
CONT. ON DWG. M524-32 (J/8)
CONT. ON DWG. M524-32 (K/13)
CONT. ON DWG. M524-32 (K/8)
CONT. ON DWG. M524-33 (A/13)
CONT. ON DWG. M524-33 (A/8)
CONT. ON DWG. M524-33 (B/13)
CONT. ON DWG. M524-33 (B/8)
CONT. ON DWG. M524-33 (C/13)
CONT. ON DWG. M524-33 (C/8)
CONT. ON DWG. M524-33 (D/13)
CONT. ON DWG. M524-33 (D/8)
CONT. ON DWG. M524-33 (E/13)
CONT. ON DWG. M524-33 (E/8)
CONT. ON DWG. M524-33 (F/13)
CONT. ON DWG. M524-33 (F/8)
CONT. ON DWG. M524-33 (G/13)
CONT. ON DWG. M524-33 (G/8)
CONT. ON DWG. M524-33 (H/13)
CONT. ON DWG. M524-33 (H/8)
CONT. ON DWG. M524-33 (J/13)
CONT. ON DWG. M524-33 (J/8)
CONT. ON DWG. M524-33 (K/13)
CONT. ON DWG. M524-33 (K/8)
CONT. ON DWG. M524-34 (A/13)
CONT. ON DWG. M524-34 (A/8)
CONT. ON DWG. M524-34 (B/13)
CONT. ON DWG. M524-34 (B/8)
CONT. ON DWG. M524-34 (C/13)
CONT. ON DWG. M524-34 (C/8)
CONT. ON DWG. M524-34 (D/13)
CONT. ON DWG. M524-34 (D/8)
CONT. ON DWG. M524-34 (E/13)
CONT. ON DWG. M524-34 (E/8)
CONT. ON DWG. M524-34 (F/13)
CONT. ON DWG. M524-34 (F/8)
CONT. ON DWG. M524-34 (G/13)
CONT. ON DWG. M524-34 (G/8)
CONT. ON DWG. M524-34 (H/13)
CONT. ON DWG. M524-34 (H/8)
CONT. ON DWG. M524-34 (J/13)
CONT. ON DWG. M524-34 (J/8)
CONT. ON DWG. M524-34 (K/13)
CONT. ON DWG. M524-34 (K/8)
CONT. ON DWG. M524-35 (A/13)
CONT. ON DWG. M524-35 (A/8)
CONT. ON DWG. M524-35 (B/13)
CONT. ON DWG. M524-35 (B/8)
CONT. ON DWG. M524-35 (C/13)
CONT. ON DWG. M524-35 (C/8)
CONT. ON DWG. M524-35 (D/13)
CONT. ON DWG. M524-35 (D/8)
CONT. ON DWG. M524-35 (E/13)
CONT. ON DWG. M524-35 (E/8)
CONT. ON DWG. M524-35 (F/13)
CONT. ON DWG. M524-35 (F/8)
CONT. ON DWG. M524-35 (G/13)
CONT. ON DWG. M524-35 (G/8)
CONT. ON DWG. M524-35 (H/13)
CONT. ON DWG. M524-35 (H/8)
CONT. ON DWG. M524-35 (J/13)
CONT. ON DWG. M524-35 (J/8)
CONT. ON DWG. M524-35 (K/13)
CONT. ON DWG. M524-35 (K/8)
CONT. ON DWG. M524-36 (A/13)
CONT. ON DWG. M524-36 (A/8)
CONT. ON DWG. M524-36 (B/13)
CONT. ON DWG. M524-36 (B/8)
CONT. ON DWG. M524-36 (C/13)
CONT. ON DWG. M524-36 (C/8)
CONT. ON DWG. M524-36 (D/13)
CONT. ON DWG. M524-36 (D/8)
CONT. ON DWG. M524-36 (E/13)
CONT. ON DWG. M524-36 (E/8)
CONT. ON DWG. M524-36 (F/13)
CONT. ON DWG. M524-36 (F/8)
CONT. ON DWG. M524-36 (G/13)
CONT. ON DWG. M524-36 (G/8)
CONT. ON DWG. M524-36 (H/13)
CONT. ON DWG. M524-36 (H/8)
CONT. ON DWG. M524-36 (J/13)
CONT. ON DWG. M524-36 (J/8)
CONT. ON DWG. M524-36 (K/13)
CONT. ON DWG. M524-36 (K/8)
CONT. ON DWG. M524-37 (A/13)
CONT. ON DWG. M524-37 (A/8)
CONT. ON DWG. M524-37 (B/13)
CONT. ON DWG. M524-37 (B/8)
CONT. ON DWG. M524-37 (C/13)
CONT. ON DWG. M524-37 (C/8)
CONT. ON DWG. M524-37 (D/13)
CONT. ON DWG. M524-37 (D/8)
CONT. ON DWG. M524-37 (E/13)
CONT. ON DWG. M524-37 (E/8)
CONT. ON DWG. M524-37 (F/13)
CONT. ON DWG. M524-37 (F/8)
CONT. ON DWG. M524-37 (G/13)
CONT. ON DWG. M524-37 (G/8)
CONT. ON DWG. M524-37 (H/13)
CONT. ON DWG. M524-37 (H/8)
CONT. ON DWG. M524-37 (J/13)
CONT. ON DWG. M524-37 (J/8)
CONT. ON DWG. M524-37 (K/13)
CONT. ON DWG. M524-37 (K/8)
CONT. ON DWG. M524-38 (A/13)
CONT. ON DWG. M524-38 (A/8)
CONT. ON DWG. M524-38 (B/13)
CONT. ON DWG. M524-38 (B/8)
CONT. ON DWG. M524-38 (C/13)
CONT. ON DWG. M524-38 (C/8)
CONT. ON DWG. M524-38 (D/13)
CONT. ON DWG. M524-38 (D/8)
CONT. ON DWG. M524-38 (E/13)
CONT. ON DWG. M524-38 (E/8)
CONT. ON DWG. M524-38 (F/13)
CONT. ON DWG. M524-38 (F/8)
CONT. ON DWG. M524-38 (G/13)
CONT. ON DWG. M524-38 (G/8)
CONT. ON DWG. M524-38 (H/13)
CONT. ON DWG. M524-38 (H/8)
CONT. ON DWG. M524-38 (J/13)
CONT. ON DWG. M524-38 (J/8)
CONT. ON DWG. M524-38 (K/13)
CONT. ON DWG. M524-38 (K/8)
CONT. ON DWG. M524-39 (A/13)
CONT. ON DWG. M524-39 (A/8)
CONT. ON DWG. M524-39 (B/13)
CONT. ON DWG. M524-39 (B/8)
CONT. ON DWG. M524-39 (C/13)
CONT. ON DWG. M524-39 (C/8)
CONT. ON DWG. M524-39 (D/13)
CONT. ON DWG. M524-39 (D/8)
CONT. ON DWG. M524-39 (E/13

NOTES:
FOR NOTES SEE M521-1.

LEGEND:
1. ALL VALVES (EXCEPT THOSE ON INSTRUMENT LINES) SUFFIXED WITH A (V) DENOTE A 3/4" VENT VALVE EXCEPT AS NOTED.
2. ALL VALVES (EXCEPT THOSE ON INSTRUMENT LINES) SUFFIXED WITH A (D) DENOTE A 3/4" DRAIN VALVE.
3. ALL VALVES SUFFIXED WITH A (TH) DENOTE A THROTTLED VALVE.

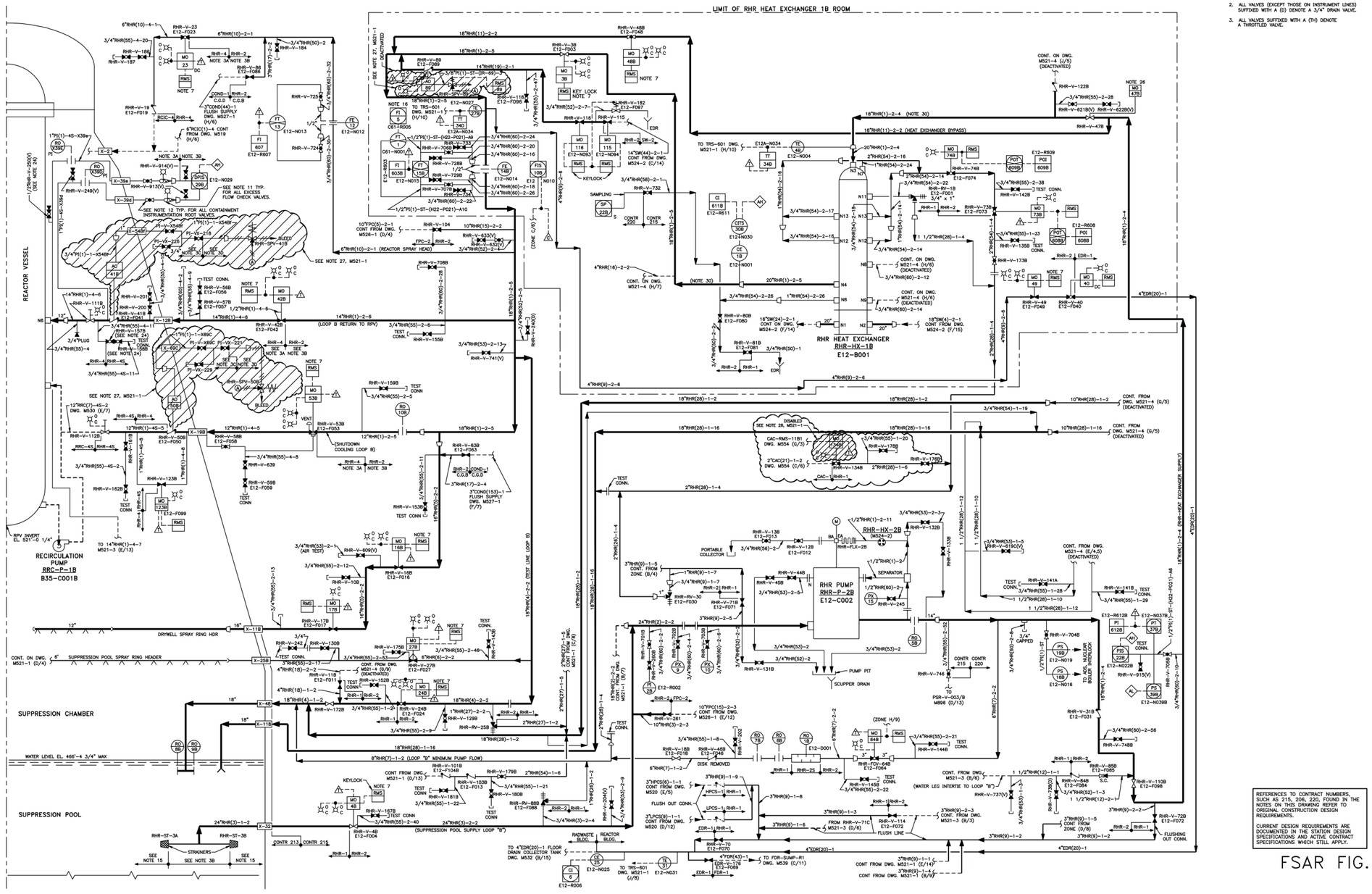
LIMIT OF RHR HEAT EXCHANGER 1B ROOM
REACTOR VESSEL
RECIRCULATION PUMP RRC-P-1B B35-C001B
SUPPRESSION CHAMBER
SUPPRESSION POOL
DRYWELL SPRAY RING HDR
SUPPRESSION POOL SPRAY RING HEADER
RHR HEAT EXCHANGER RHR-HX-1B E12-B001
RHR PUMP RHR-P-2B E12-C002
RHR-HX-2B (M524-2)
TO TRS-601 DWG. M521-1 (H/10)
TO TRS-601 DWG. M521-1 (J/8)
TO RSR-003/B M996 (D/13)
TO ADS, NUCLEAR BOILER INTERLOCK
TO 14"RHR(1)-4-7 M521-3 (E/13)
TO 4"EDR(20)-1 FLOOR DRAIN COLLECTOR TANK DWG. M532 (B/15)
TO FDR-SUMP-R1 DWG. M539 (C/11)
TO 4"EDR(20)-1
FROM RHR-V-71C M521-3 (D/4)
FLUSH LINE
FLUSHING OUT CONN.
CONT. FROM DWG. M521-3 (B/4)
(WATER LEG INTERTIE TO LOOP "B")
CONT. FROM DWG. M521-3 (B/5)
CONT. FROM DWG. M521-1 (E/14)
CONT FROM DWG. M521-1 (B/5)
CONT. FROM DWG. M521-4 (G/5) (DEACTIVATED)
CONT. FROM DWG. M521-4 (G/4,5) (DEACTIVATED)
CONT. ON DWG. M521-4 (J/5) (DEACTIVATED)
CONT. ON DWG. M521-4 (H/6) (DEACTIVATED)
CONT. ON DWG. M521-4 (H/7)
CONT. ON DWG. M521-1 (D/4)
CONT. ON DWG. M521-1 (D/13)
CONT FROM DWG. M521-1 (B/7)
CONT FROM DWG. M526-1 (E/12)
CONT FROM DWG. M526-1 (D/4)
CONT FROM DWG. M520 (E/5)
CONT FROM DWG. M520 (D/12)
CONT FROM ZONE (B/4)
CONT FROM ZONE (D/6)
CONT FROM DWG. M521-4 (D/5)
CONT FROM DWG. M521-4 (G/5) (DEACTIVATED)
CONT FROM DWG. M521-4 (H/6) (DEACTIVATED)
CONT FROM DWG. M521-4 (J/5) (DEACTIVATED)
CONT FROM DWG. M524-2 (F/14)
CONT FROM DWG. M524-2 (F/15)
CONT FROM DWG. M524-2 (C/14)
CONT FROM DWG. M521-3 (B/3)
CONT FROM DWG. M521-3 (B/6)
CONT FROM DWG. M521-4 (D/5)
CONT FROM DWG. M521-4 (E/4,5) (DEACTIVATED)
CONT FROM DWG. M521-4 (G/5) (DEACTIVATED)
CONT FROM DWG. M521-4 (H/6) (DEACTIVATED)
CONT FROM DWG. M521-4 (J/5) (DEACTIVATED)
CONT FROM DWG. M521-1 (E/14)
CONT FROM DWG. M521-1 (B/5)
CONT FROM DWG. M521-1 (D/13)
CONT FROM DWG. M521-1 (D/4)
CONT FROM DWG. M521-1 (B/7)
CONT FROM DWG. M521-1 (B/5)
CONT FROM DWG. M521-1 (D/4)
CONT FROM DWG. M521-1 (B/5)
CONT FROM DWG. M521-1 (E/14

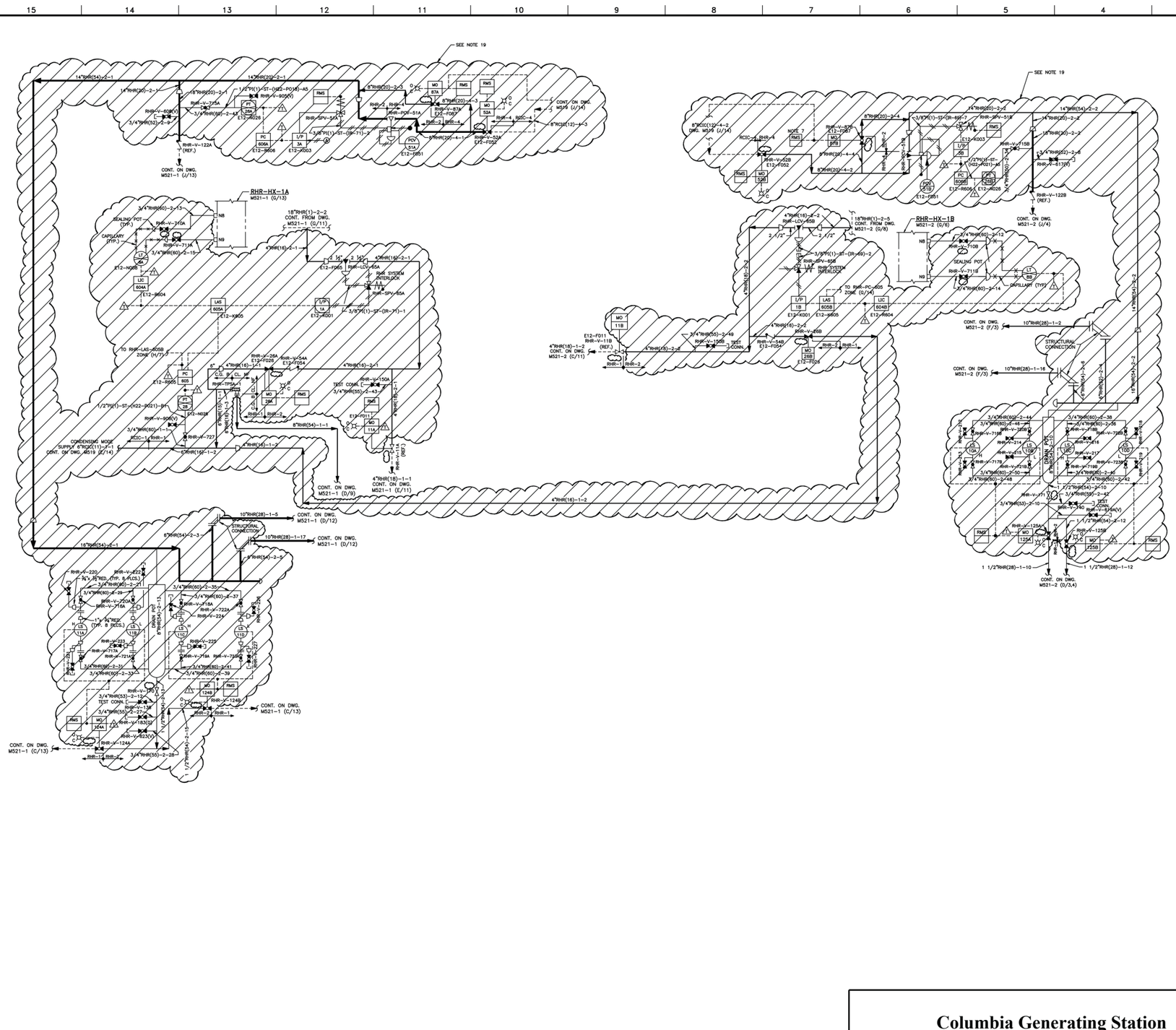

NOTES:

SEE M521-1 FOR NOTES

LEGEND:

1. ALL VALVES (EXCEPT THOSE ON INSTRUMENT LINES AND AS NOTED ON DIAGRAM) SUFFIXED WITH A (V) DENOTE A 3/4" VENT VALVE.
2. ALL VALVES (EXCEPT THOSE ON INSTRUMENT LINES) SUFFIXED WITH A (D) DENOTE A 3/4" DRAIN VALVE.
3. ALL VALVES SUFFIXED WITH A (TH) DENOTE A THROTTLED VALVE.

FSAR FIG.

Columbia Generating Station
Final Safety Analysis Report

Residual Heat Removal System - P&ID

Draw. No. M521-4	Rev. 6	Figure 05.4-15.4

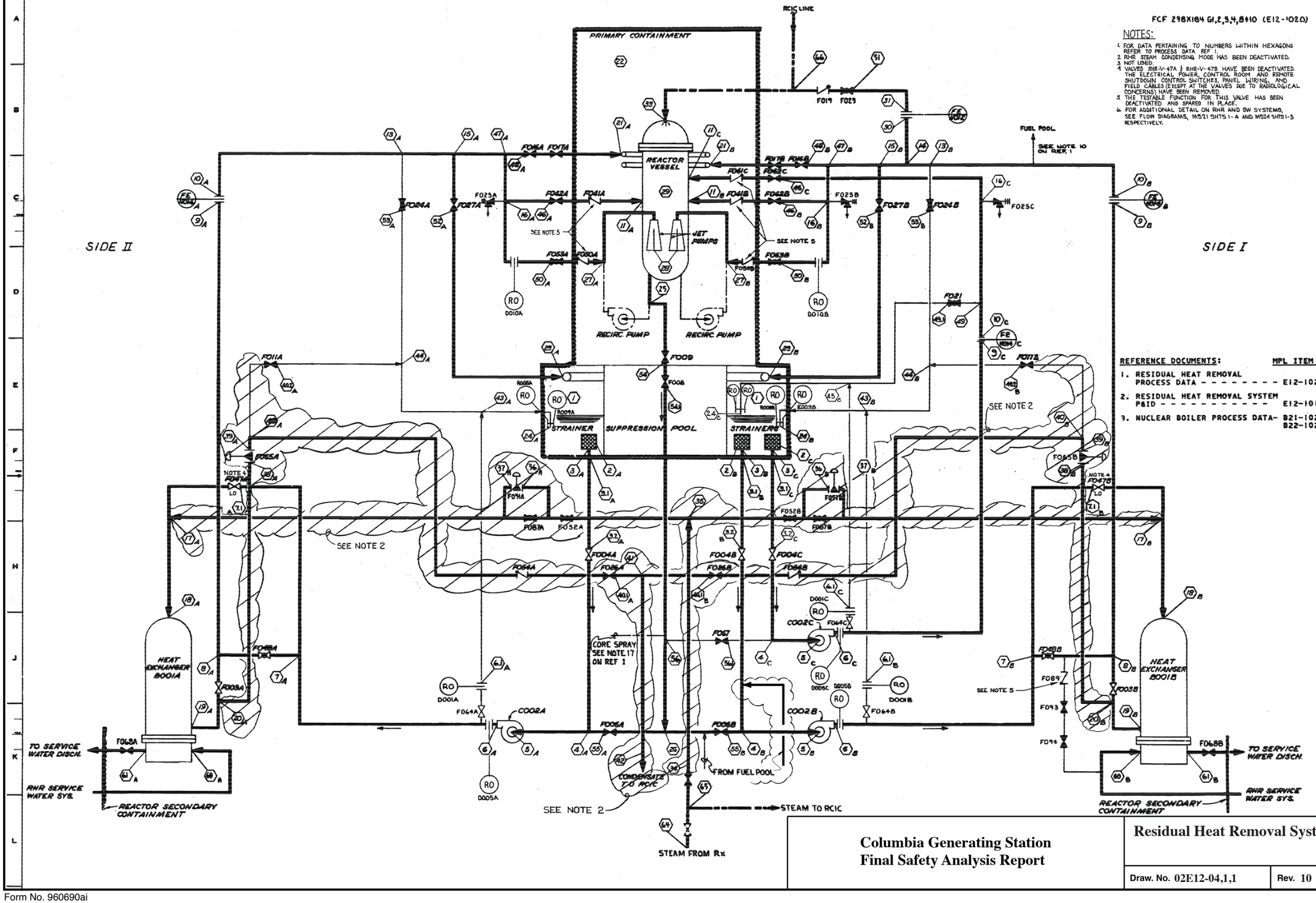

Columbia Generating Station Final Safety Analysis Report	**Residual Heat Removal System Process Diagram**	
	Draw. No. 02E12-04,1,1	Rev. 10 / Figure 5.4-16

MODE F (SEE NOTE 3)

POSITION ○	1	2	3	4	5	6	49	7	8	9	10	13	23/24	1
FLOW-GPM	—	7450 ←										→	7450	—
PRESS-PSIA	14.7	⊠	⊠	⊠	⊠	⊠	⊠	⊠	⊠	⊠				14.7
TEMP °F		120/40 ←										→	120/40	—
MAX. PRESS. DROP-FEET	←				•TDH=267•									→

MODE G (R_X PRESS. 135 PSIG)

POSITION ○	29	25	26	4	5	6	43	24	1		1	2 BC	3 BC	4 BC	5 BC	6 BC	6.2	43 B	24 B	1
FLOW-GPM	—	550 ←					→	550	—		—	550 ←						→	550	—
PRESS-PSIA	150	⊠	⊠	⊠	⊠			⊠	14.7		14.7	⊠	⊠	⊠	⊠				⊠	14.7
TEMP °F	—	358 ←					→	358	—		—	125/40 ←						→	125/40	—
MAX. PRESS. DROP-FEET	←				TDH=650 SEE NOTE 22				→		←				TDH=650 SEE NOTE 22					→

MODE S

POSITION ○	1	2 ABC	3 ABC	4 ABC	5 ABC	6 ABC	18 A,B	19 A,B	20 A,B	9 ABC	10 ABC	46 ABC	11 ABC	48 A,B	21 A,B	50 A,B	27 A,B	51	33	52 A,B	53 A,B
FLOW-GPM	N/A	←																		→	N/A
PRESS.-PSIA	14.7	⊠	⊠	⊠	⊠	⊠	⊠	⊠	⊠	⊠	⊠	⊠	1015	⊠	15.5	⊠	1015	⊠	1015	⊠	⊠
TEMP °F	90/40	←									→	90/40	547	90/40	135	90/40	547	90/40	547	90/40	90/40
MAX. PRESS DROP-FEET					0																

MODE S (CONT'D)

POSITION ○	54	56	55 A,B		34	35	36 A,B	37 A,B	17 A,B		20 A,B	38 A,B	40 A,B	41	42
FLOW-GPM	N/A	N/A	N/A		N/A	←		→	N/A		N/A	←		→	N/A
PRESS.-PSIA	⊠	⊠	⊠		⊠	⊠	⊠	⊠	⊠		⊠	⊠	⊠	⊠	⊠
TEMP °F	AMB	AMB	AMB		AMB	AMB	AMB	90/40	90/40		90/40	90/40	AMB	AMB	AMB
MAX PRESS DROP-FEET															

MODE C-3 4HRS 135PSIG R_X PRESS (SEE NOTE 24)

POSITION ○	29	64	65	34	35	36 A,B	37 A,B	17 A,B	18 A,B	19 A,B	20 A,B	38 A,B	39 A,B	40 A,B	41	42					60 A,B	61 A,B		
FLOW (SEE NOTE 15)	—	119.6	114.4	←→	114.4	57.2	←	→	57.2	116	←			→ 116	232	232					7400	7400		
PRESS-PSIA	150					⊠	⊠	⊠	>60	⊠	⊠	⊠	⊠	⊠		59.7/14.7					⊠	⊠		
TEMP °F	—	323 ←						→	323	140	←				→	140					95	111.8		
MAX PRESS DROP-PSI	←						ΔP=90.3/135.3									→								

HEAT REMOVAL PER STEAM CONDENSING HX 62.15 X 106 BTU/HR (2 HX STEAM CONDENSING)

MODE C-4 8HRS 135PSIG R_X PRESS (SEE NOTE 24)

POSITION ○	29	64	65	34	35	36 A	37 A	17 A	18 A	19 A	20 A	38 A	39 A	40 A	41	42					60 A	61 A		
FLOW (SEE NOTE 15)		98.7	93.5 ←					→	93.5	190	←				→	190					7400	7400		
PRESS PSIA	150	⊠	⊠	⊠	⊠				>60	⊠					⊠	59.7/14.7					⊠	⊠		
TEMP °F	—	323 ←						→	323	140	←				→	140					95	122.5		
MAX PRESS DROP-PSI	←						ΔP=90.3/135.3									→								

HEAT REMOVAL PER STEAM CONDENSING HX 101.6×10^6 BTU/HR (1 HX STEAM CONDENSING)

MODE A-1 (SEE NOTE 3 & 14)

POSITION ○	1	2	3	4	5	6	7	8	9	10	16	11	29
FLOW-GPM	—	7450 ←									→	7450	--
PRESS.-PSIA	59.7/14.7	⊠	⊠	⊠	⊠								85.7/40.7
TEMP °F	—	170/40 ←									→	170/40	
MAX. PRESS. DROP-FEET	←				•TDH=267•				•ΔH= 17•			•ΔH=40•	→

MODE A-2 (SEE NOTE 14)

SEE NOTE 27

POSITION ○	1	2	3	4	5	6	7	8	9	10	16	11	29
FLOW-GPM	—	8000 ←									→	8000	—
PRESS.-PSIA	14.7	⊠	⊠	⊠	⊠	⊠	⊠	⊠	⊠	⊠	⊠	⊠	14.7
TEMP °F	—	180/90 ←									→	180/90	—
MAX. PRESS. DROP-FEET	←				•TDH=235•								→

MODE B

POSITION ○	1	2 A,B	3 A,B	4 A,B	5 A,B	6 A,B	7 A,B	17 A,B	18 A,B	19 A,B	20 A,B	8 A,B	9 A,B	10 A,B	13 A,B	14	15 A,B	21 A,B	22	23 A,B	1		60 A,B	61 A,B
FLOW-GPM	—	7900 ←														→	7900	7450	—	450	—		7400	7400
PRESS-PSIA	59.7/14.7					⊠	⊠	⊠	⊠	⊠	⊠	⊠	⊠	⊠	⊠	⊠			59.7/14.7		59.7/14.7		⊠	⊠
TEMP °F	—	212 ←						→	212	179.3	179.3	179.3	179.3	179.3	179.3	179.3	179.3	179.3	—	179.3	—		95	128.8
MAX. PRESS. DROP-FEET	←				•TDH=235•														→		→			

HEAT REMOVAL PER HX 121.7×10^6 BTU/HR (1 HX OPERATING) SEE NOTE 16

INDICATES FLOW PASSING THRU ABOVE POSITIONS (TYP)

SEE NOTE 7 (TYP)

MODE C-1 R_X PRESS 1000 PSIG (SEE NOTE 24)

POSITION ○	29	34	35	36 A,B	37 A,B	17 A,B	18 A,B	19 A,B	20 A,B	38 A,B	39 A,B	40 A,B	41	42	40.2 A,B	24 A,B	1		60 A,B	61 A,B
FLOW- (SEE NOTE 15)	—	187.1	187.1	93.5	←	→	93.5	190				→ 190	380	380	190	190	—		7400	7400
PRESS-PSIA	1015	⊠	⊠	⊠	214.7	⊠	⊠	⊠	⊠	⊠	⊠	⊠		59.7			14.7		⊠	⊠
TEMP °F	—	546	546	546	387.7	387.7	387.7	140	←						→	140	—		95	122.4
MAX. PRESS. DROP-PSI	←	ΔP=800				←		ΔP=200 / ΔP=155								→				

HEAT REMOVAL PER HX 101.4×10^6 BTU/HR (2 HX STEAM CONDENSING)

MODE C-2 R_X PRESS 1000 PSIG (SEE NOTE 24)

POSITION ○	29	34	35	36 A	37 A	17 A	18 A	19 A	20 A	38 A	39 A	40 A	41	42		60 A	61 A
FLOW (SEE NOTE 15)	—	136.2 ←				→	136.2	277	←				→	277		7400	7400
PRESS-PSIA	1015	⊠	⊠	⊠	214.7	⊠	⊠	⊠					⊠	59.7		⊠	⊠
TEMP °F	—	546	546	546	387.7	387.7	387.7	140	←				→	140		95	134.8
MAX PRESS DROP-PSI	←		ΔP=800			→ ←				ΔP=155				→			

DUTY PER STEAM CONDENSING HX 147.5×10^6 BTU/HR (1 HX STEAM CONDENSING)

MODE C-2 (CONT'D) (SEE NOTE 24) (SEE NOTE 14)

POSITION ○	1	2 A,B	3 A,B	4 A,B	5 A,B	6 A,B	7 A,B	17 A,B	18 A,B	19 A,B	20 A,B	9 A,B	10 A,B	13 A,B	43 A,B	24 A,B	1		60 A,B	61 A,B
FLOW/GPM	—	7450 ←													→	7450	—		7400	7400
PRESS-PSIA	14.7	⊠	⊠	⊠	⊠	⊠	⊠	⊠	⊠	⊠	⊠	⊠	⊠	⊠	⊠	⊠	14.7		⊠	⊠
TEMP °F	—	120/70 ←						→	120/70	103.1	103.1	103.1	103.1	103.1	103.1	103.1	—		95	103.2
MAX. PRESS. DROP-FEET	←				•TDH=267•												→			

HEAT REMOVAL PER POOL COOLING HX 26.0×10^6 BTU/HR (1 HX OPERATING)

MODE D (SEE NOTE 26) RX PRESS 48 PSIG

POSITION ○	29	25	26	4 A,B	5 A,B	6 A,B	18 A,B	19 A,B	8 A,B	9 A,B	10 A,B	14	27 A,B	28	30	31	51	33	C9				60 A,B	61 A,B
FLOW/GPM	—	7450	7450	7450	7450	7450	≤7450	≤7450	7450	←	→	7450	7450/6580	7450/6580	870/0	870/0	870/0	870/0	—				7400	7400
PRESS-PSIA	62.7			⊠	⊠	⊠	⊠	⊠	⊠	⊠	⊠	⊠	⊠	⊠	62.7				110				⊠	⊠
TEMP °F	—	295 ←				→	295	295	295	295	295	295	295	295	295	295	275	295	—				85	125
MAX PRESS DROP-FEET	←				•TDH=267•										•ΔH=	17•		•ΔH=	→					

HEAT REMOVAL PER HX 148×10^6 BTU/HR (1 HX OPERATING) SEE NOTE 21

SEE RCIC (REF 3)

MODE E RX PRESS 0 PSIG

POSITION ○	29	25	26	55 A,B	4 A,B	5 A,B	6 A,B	18 A,B	19 A,B	9 A,B	10 A,B	11 A,B	16 A,B	27 A,B	28 A,B	C9		60 A,B	61 A,B
FLOW-GPM	—	14,900/7450	14,900	7450 ←										→	7450	—		7400	7400
PRESS-PSIA	14.7	⊠	⊠	⊠	⊠	⊠	⊠	⊠	⊠	⊠	⊠	⊠				14.7		⊠	⊠
TEMP °F	—	125/AMB ←					→	125/AMB	113.8	113.8	113.8	113.8	113.8	113.8	113.8	—		85	96.3
MAX PRESS DROP-FEET	←					•TDH=267•	•ΔH=23.3•							•ΔH=18•	→			•ΔH=23.1•	

LOOPS A & B ONLY

DUTY PER HX 41.6×10^6 BTU/HR (2 HX'S OPERATING)

MODES:

A-1 ACCIDENT WITH RECIRCULATION LINE BREAK IN EITHER SIDE AND THREE PUMP OPERATION. SEE NOTE 25

A-2 ACCIDENT WITH RECIRCULATION LINE BREAK IN EITHER SIDE AND THREE PUMP OPERATION. SEE NOTE 25 (10 MIN)

B POST ACCIDENT CONTAINMENT SPRAY WITH HEAT REJECTION WITH ONE PUMP OPERATION. SEE NOTE 25 (PEAK SUPPRESSION POOL TEMPERATURE)

C-1 REACTOR ISOLATION - 2HX STEAM CONDENSING (1/2 HR) SEE NOTE 24

C-2 REACTOR ISOLATION - 1HX STEAM CONDENSING AND 1HX POOL COOLING (1 1/2 HR) SEE NOTE 24

C-3 REACTOR ISOLATION - 2HX STEAM CONDENSING (4 HR) SEE NOTE 24

C-4 REACTOR ISOLATION - 1HX STEAM CONDENSING (8 HR) SEE NOTE 24

D NORMAL SHUTDOWN AFTER BLOWDOWN TO MAIN CONDENSER

E CONTINUATION OF NORMAL SHUTDOWN FROM PLANT MODE "D" (AT 0 PSIG) AND FUNCTIONAL PUMP TEST AFTER SHUTDOWN.

F RHR SYSTEM TEST DURING PLANT OPERATION.

G MINIMUM FLOW BYPASS MODE.

S SYSTEM ON STANDBY DUTY

LEGEND

R_X PRESS----REACTOR VESSEL PRESSURE
TDH---------TOTAL DYNAMIC HEAD
SOH---------SHUTOFF HEAD
ΔH----------HEAD LOSS
ΔP----------PRESSURE LOSS

REFERENCE DOCUMENTS:

	MPL ITEM NO.
1. RESIDUAL HEAT REMOVAL SYSTEM P&ID	E12-1010
2. RESIDUAL HEAT REMOVAL SYSTEM DESIGN SPEC	E12-4010
3. RCIC PROCESS DIAGRAM	E51-1020
4. RECIRC SYSTEM PROCESS FLOW DIAGRAM	B35-1040
5. LOW PRESSURE CORE SPRAY PFD	E21-1020

796E379AA

NOTES

1. PROCESS DIAGRAM 731E960 SHALL BE USED WITH AND FORM A PART OF THIS PROCESS DATA. IF THERE ARE ANY CONFLICTS BETWEEN THE PROCESS DIAGRAM AND THIS PROCESS DATA, THE PROCESS DATA SHALL GOVERN.
2. PIPING BETWEEN POINTS WITH EMPTY DATA BLANKS (SEE ALSO TABLE 3) SHALL BE SIZED BY OTHERS BASED ON SPECIFIED OPERATING CONDITIONS. EMPTY DATA BLANKS CAN BE FILLED IN BASED ON ACTUAL ARRANGEMENT BY OTHERS ⊠ - INDICATES THE DATA IS NOT SIGNIFICANT.
3. SHOWN AS TYPICAL FOR ONE LOOP. IF LOOPS ON SIDE I AND SIDE II ARE NOT SYMMETRICALLY ARRANGED, VALUES FOR BOTH SIDES SHALL BE SUBMITTED.
4. ΔP VALUES FOR EQUIPEMENT WITHIN GE-BWRSD SCOPE ARE AS NOTED.
5. ELEVATIONS ARE NOT INCLUDED IN ΔP, VALUES GIVEN, ELEVATIONS SHALL BE INCLUDED WHEN DETERMINING FINAL VALUES FOR THE EMPTY DATA BLANKS.
6. X/Y - INDICATES MAXIMUM (X) AND MINIMUM (Y) VALUES FOR THE MODE SPECIFIED.
7. DASHED LINES INDICATE FLOW DOES NOT PASS THRU THESE POINTS.
8. THE NPSH AVAILABLE IN MODES B & D AT THE CENTERLINE OF THE SUCTION NOZZLE ARE DEFINED IN CALCULATION 5.17.19
9. SERVICE WATER CROSSTIE, SHALL BE SIZED TO FLOW 300 GPM.
10. THIS PORTION OF PIPING TO BE SIZED BASED ON FLOW SHOWN ON THE FUEL POOL PROCESS DIAGRAM.
11. TABLE I INDICATES TYPICAL VALVE POSITIONS DURING VARIOUS MODES OPERATED.
12.
13.
14. TYPICAL VALUES FOR MAX. AND MIN. SUPPRESSION POOL TEMP SHOWN. FINAL TEMPERATURES DEPEND ON INITIAL POOL WATER TEMPERATURE & POOL WATER VOLUME.
15. WATER FLOWS ARE IN GPM, STEAM FLOWS ARE IN 1000 LBS/HR.
16. H_X DUTY BASED UPON 7450 GPM SHELL SIDE FLOW.
17. FOR LINE SIZING INFORMATION SEE REF. 5.
18. THE WEIGHT OF WATER IN THE SHUTDOWN COOLING SUBSYSTEM PIPING, INCLUDING THE HEAT EXCHANGERS AND PUMPS SHALL NOT EXCEED 225,000LBS AT 70°F TO PREVENT DILUTION OF STANDBY LIQUID CONTROL NEUTRON ABSORBER BELOW MINIMUM REQUIREMENTS.
19.
20. PIPING SYSTEM DESIGN PRESSURE AND TEMPERATURE AND THE ESTIMATED LINE SIZES ARE FOR INFORMATION ONLY. ACTUAL DESIGN PRESSURE & TEMPERATURE AND LINE SIZES AS DETERMINED BY OTHERS SHALL MEET THE PROCESS DATA HYDRAULIC REQUIREMENTS.
21. HEAT EXCHANGER CAPABILITY SHOWN AT SERVICE WATER OUTLET TEMP. OF 125°F.
22. PUMP SHUTOFF HEAD 800 FT. MAX.
23. THE HX STEAM INLET PRESSURE SHALL BE GREATER THAN 60 PSIA TO MINIMIZE THE POSSIBILITY OF FLOW INDUCED VIBRATION.
24. THE STEAM CONDENSING MODE HAS BEEN DEACTIVATED.
25. STRAINER PLUGGING CRITERIA ARE DEPICTED IN CALCULATIONS 5.17.19 AND ME-02-97-03
26. DURING REFUELING OUTAGES, THE HEAD SPRAY LINE (NODES 30, 31 & 51) MAY ALSO BE USED TO PROVIDE 1000 GPM FLOW TO THE REACTOR CAVITY FOR DECAY HEAT REMOVAL.
27. MAX FLOW (RUNOUT) FOR RHR-P-2A AND RHR-P-2B IS 8100 GPM.

THE SUPPLY SYSTEM IS RESPONSIBLE FOR DESIGN CHANGE CONTROL OF THIS DOCUMENT

Columbia Generating Station
Final Safety Analysis Report

Residual Heat Removal System Process Data

Draw. No. 02E12-04,22,1 | Rev. 9 | Figure 5.4-17.1

POSITION ○	3.1	3.2	4	5	6	7	C	9	10	47	48	46	11	7	7.1	18	19	20	8	3.2	4	5	6	9	10	46	11	25	56.1	26	4	5	15	30	27
DESIGN PRESS. IN PSIG	125	220						500					1250	500				500		220				500		1250	SEE REF 4 REF 12		220			500	SEE REF 6 REF 16	
DESIGN TEMP IN °F	212	358						480				480	575	358				358		358				480		575			358			480		
ESTIMATED LINE SIZE	24"							18"					18"	18"				24"						8"		12"	20"			18"	24"		12"	
	LPCI LINE (VIA RHR Hx BYPASS)													HX LINE						LPCI LINE (DIRECT TO REACTOR)								SHUTDOWN SUCTION					SHUTDOWN RETURN LINE	

POSITION ○	34	35	36	37	17	18	19	20	58	39	40	40.1	41	42	14	30	31	51	66	40	40.2	44	47	45	21	15	52	23	13	55	44	45	24
DESIGN PRESS. IN PSIG	1250			500			500			500		500	125		500			SEE REF. 3		500		125	500			500			500			500		125
DESIGN TEMP IN °F	575			480			480			358		358	212		358					358		212	358		212	358		212	358			358		300
ESTIMATED LINE SIZE	10"		8		18		18"			4"					6"					4"			16"			4"			18"				
	STEAM TO HX						CONDENSATE FROM HX								HEAD SPRAY LINE					CONDENSATE TO POOL			DRYWELL SPRAY			SUPPRESSION POOL SPRAY			SYSTEM TEST LINES (LOOPS A & B)				

POSITION ○	56	56.1	4	49	48.1	24	6	6.1		45	6	6.1	45
DESIGN PRESS. IN PSIG	220	125	500	125			500	125			500	125	
DESIGN TEMP IN °F	358	212	358				358	300			358	212	
ESTIMATED LINE SIZE	18"		18"				4"	4"			4"		
	SYSTEM TEST LINES (LOOP C)						MIN FLOW BYPASS LINES (LOOP C)				MIN FLOW BYPASS (LOOP A)		

TABLE 1 - VALVE POSITION CHART — SEE NOTE 11

| MODE | 1 | 2 | 3 | 4 | 5 | 6 | 7 | 8 | 9 | 10 | 11 | 12 | 13 | 14 | 15 | 16 | 17 | 18 | 19 | 20 |

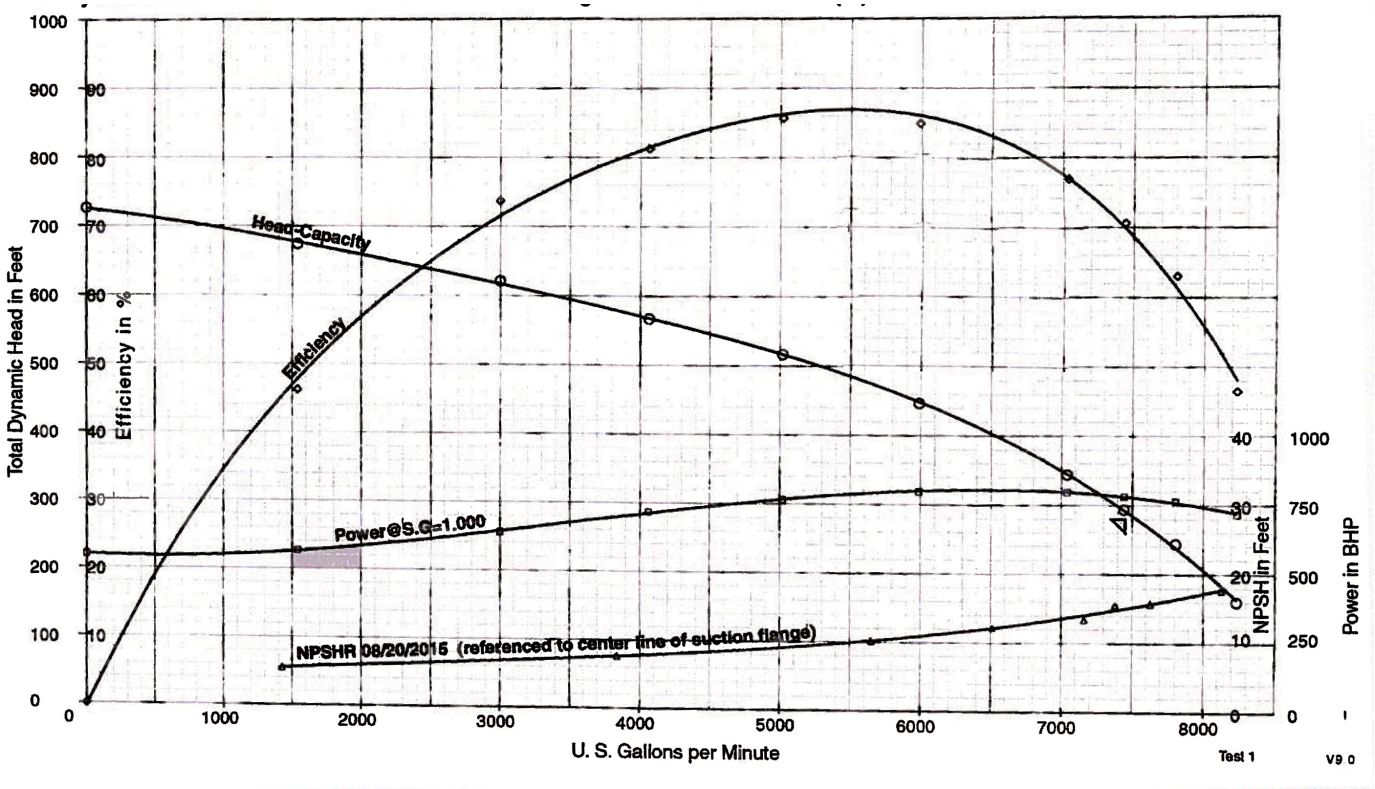

PERFORMANCE AT RATED CONDITIONS OF 1770 RPM & 1.0000 SP. GR.

	1	2	3	4	5	6	7	8	9	10
Flow (GPM)	8232.4	7804.6	7440.4	7038.6	5987.7	5016.6	4083.4	3000.0	1537.2	0.0
Total Dynamic Head (feet)	160.1	243.8	293.7	343.7	446.4	516.6	567.3	621.1	674.0	725.9
Power (BHP)	716.7	763.5	782.6	796.1	796.1	764.8	717.2	639.7	567.0	549.7

PERFORMANCE AT RATED CONDITIONS OF 1770 RPM & 1.0000 SP. GR.

	1	2	3	4	5	6	7	8	9	10
Flow (GPM)	8128.4	7626.1	7379.0	7160.0	6509.1	5647.9	3838.0	1426.8	------	------
NPSHR (feet)	17.68	15.80	15.54	13.44	12.21	10.19	7.63	5.52	------	------

NPSHR referenced to centerline of suction flange

Columbia Generating Station Final Safety Analysis Report	RHR (LPCI) Pump Characteristics (S/N 0473-111) P-2A		
	Draw. No. 960690.89	Rev.	Figure 5.4-18

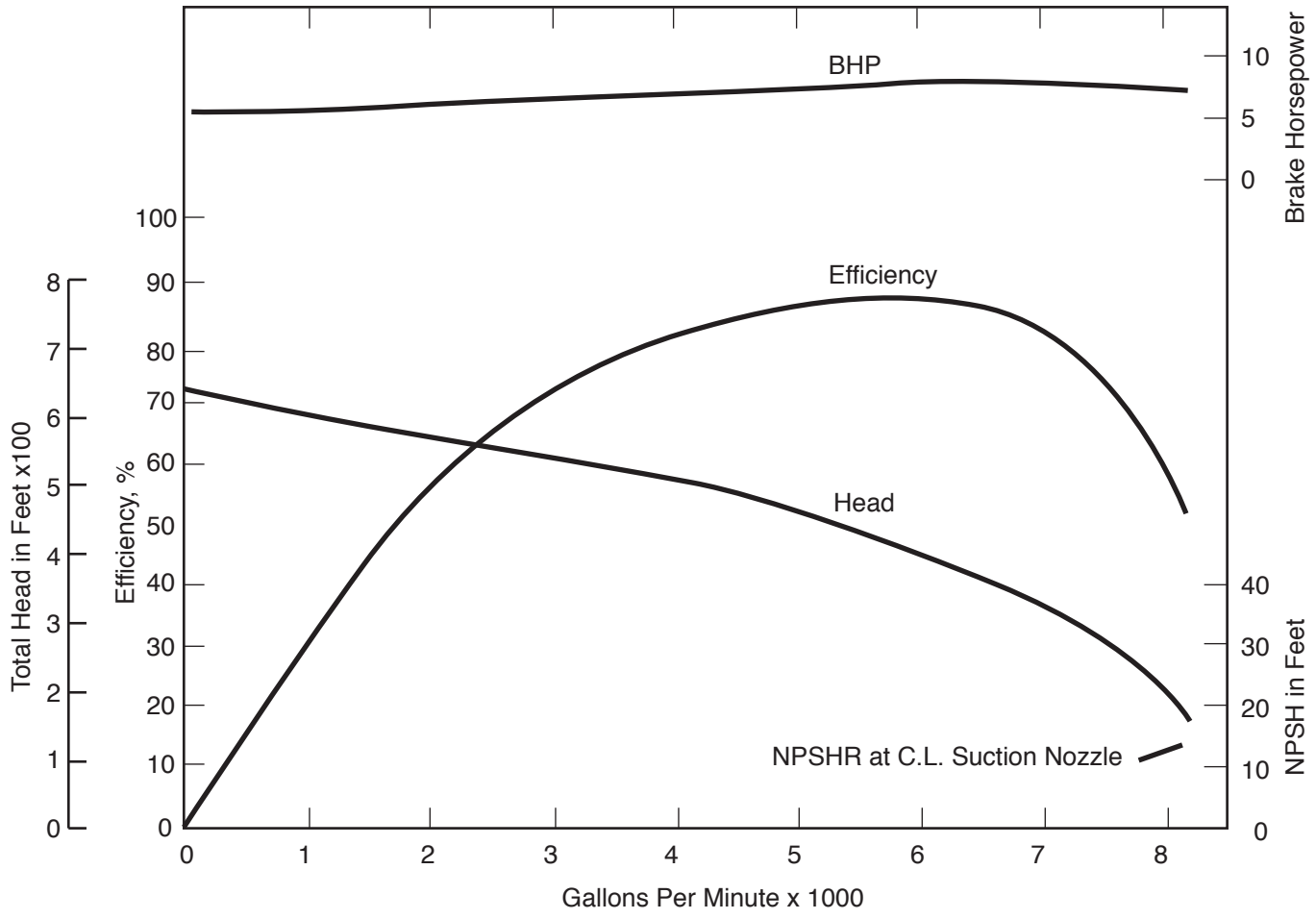

Columbia Generating Station Final Safety Analysis Report	RHR (LPCI) Pump Characteristics (S/N 0801MP004399-1) P-2B		
	Draw. No. 960690.90	Rev. 1	Figure 5.4-19

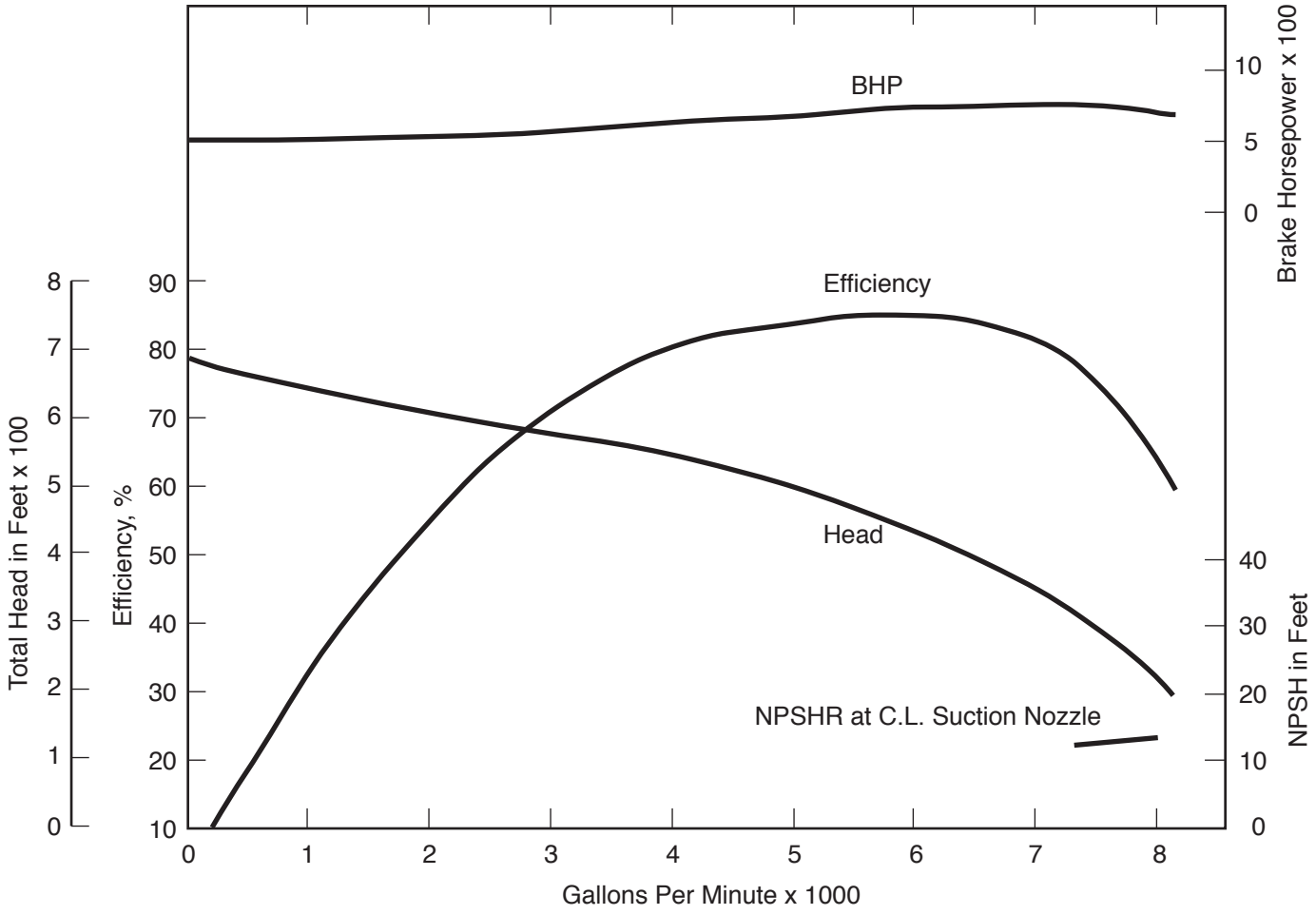

Columbia Generating Station Final Safety Analysis Report	RHR (LPCI) Pump Characteristics (S/N 0473112) P-2C		
	Draw. No. 960690.91	Rev.	Figure 5.4-20

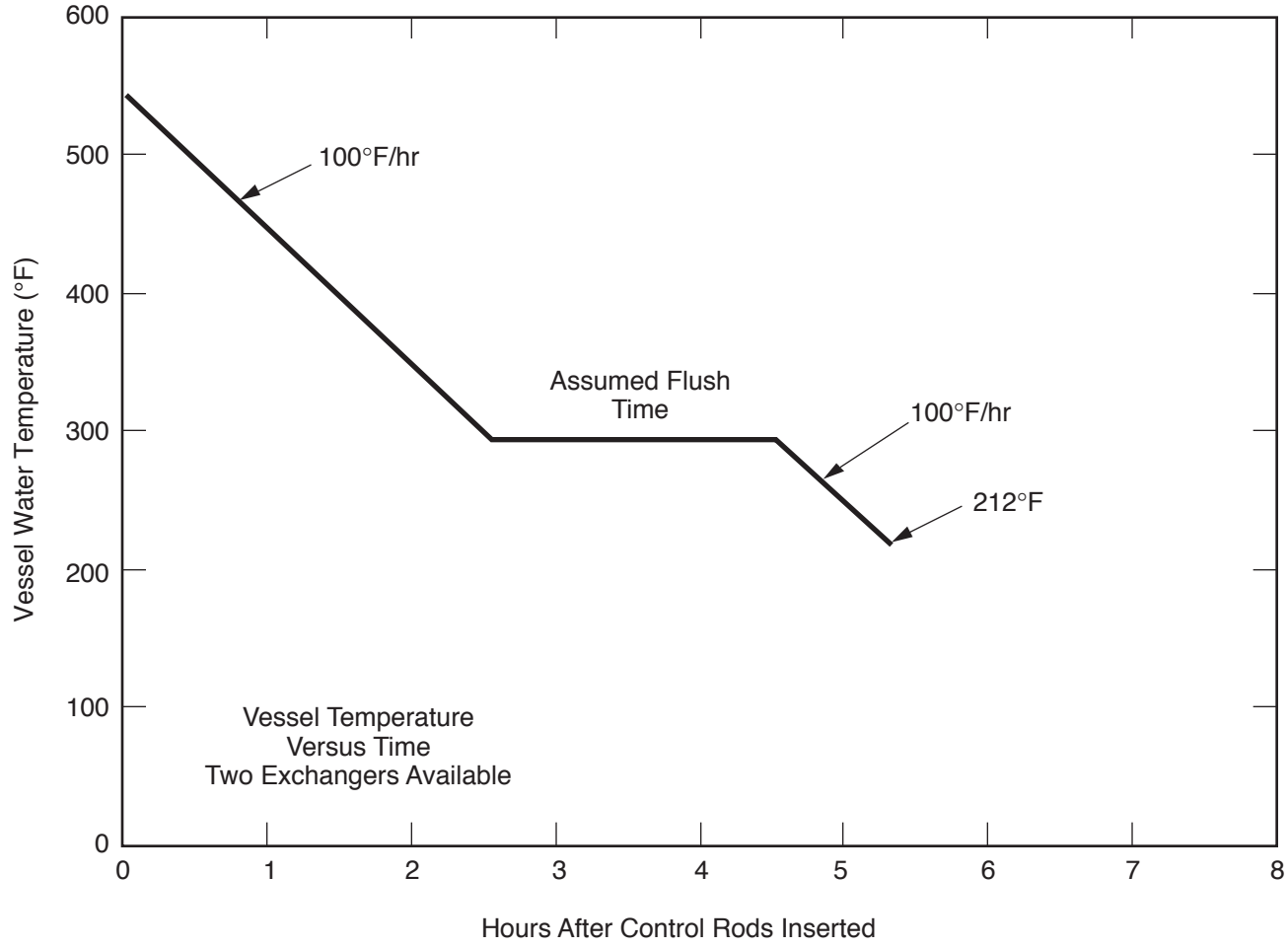

Columbia Generating Station **Final Safety Analysis Report**	**Vessel Coolant Temperature Versus Time (Two Heat Exchangers Available)**		
	Draw. No. **960690.88**	Rev.	Figure **5.4-21**

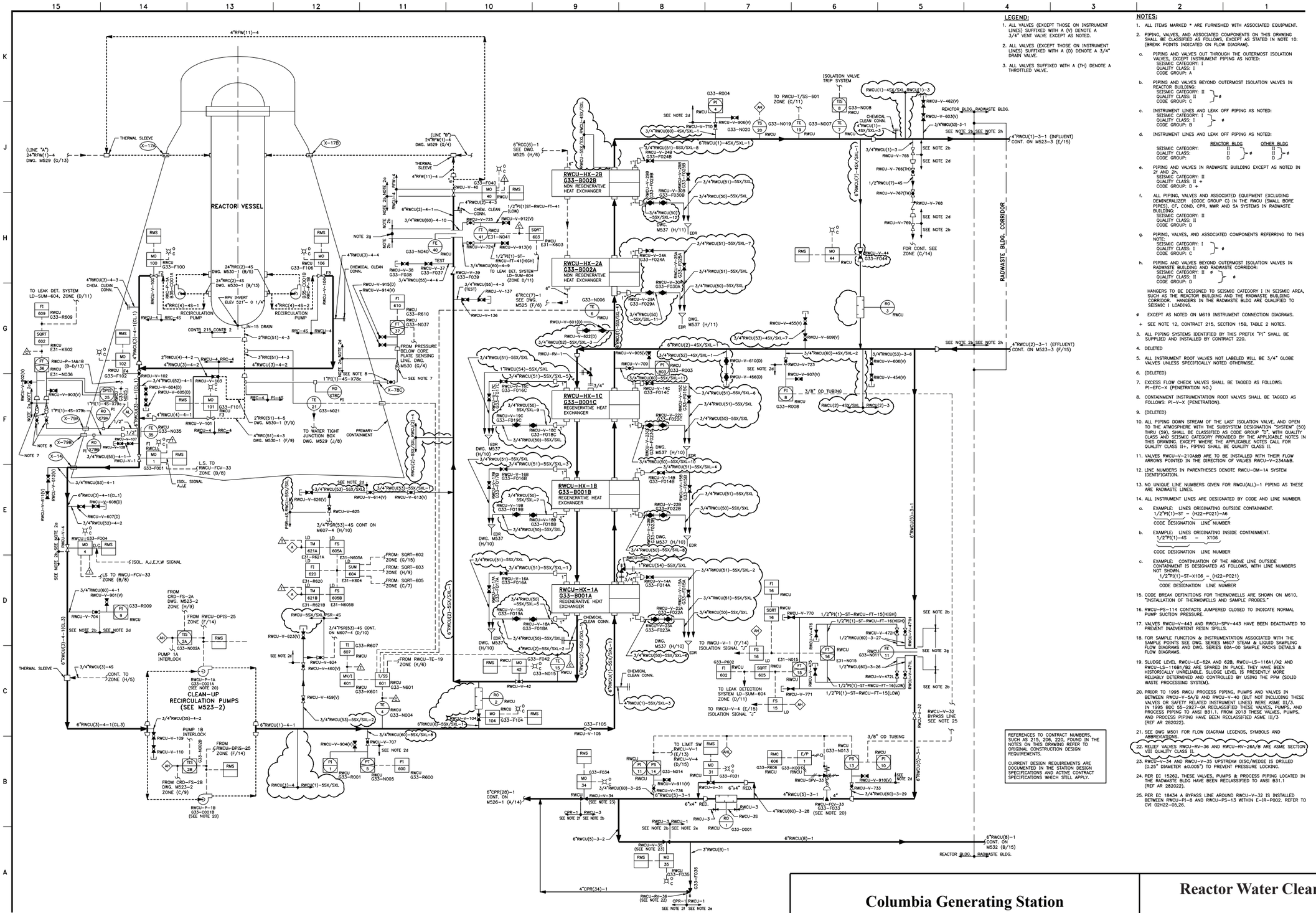

LEGEND:

1. ALL VALVES (EXCEPT THOSE ON INSTRUMENT LINES) SUFFIXED WITH A (V) DENOTE A 3/4" VENT VALVE EXCEPT AS NOTED.
2. ALL VALVES (EXCEPT THOSE ON INSTRUMENT LINES) SUFFIXED WITH A (D) DENOTE A 3/4" DRAIN VALVE.
3. ALL VALVES SUFFIXED WITH A (TH) DENOTE A THROTTLED VALVE.

NOTES:

1. ALL ITEMS MARKED * ARE FURNISHED WITH ASSOCIATED EQUIPMENT.
2. PIPING, VALVES, AND ASSOCIATED COMPONENTS ON THIS DRAWING SHALL BE CLASSIFIED AS FOLLOWS, EXCEPT AS STATED IN NOTE 10: (BREAK POINTS INDICATED ON FLOW DIAGRAM).
   a. PIPING AND VALVES OUT THROUGH THE OUTERMOST ISOLATION VALVES, EXCEPT INSTRUMENT PIPING AS NOTED:
      SEISMIC CATEGORY: I
      QUALITY CLASS: I
      CODE GROUP: A
   b. PIPING AND VALVES BEYOND OUTERMOST ISOLATION VALVES IN REACTOR BUILDING:
      SEISMIC CATEGORY: II
      QUALITY CLASS: II
      CODE GROUP: C
   c. INSTRUMENT LINES AND LEAK OFF PIPING AS NOTED:
      SEISMIC CATEGORY: I
      QUALITY CLASS: I
      CODE GROUP: B
   d. INSTRUMENT LINES AND LEAK OFF PIPING AS NOTED:

	REACTOR BLDG	OTHER BLDG
SEISMIC CATEGORY:	II	II
QUALITY CLASS:	II	II
CODE GROUP:	D	D

   e. PIPING AND VALVES IN RADWASTE BUILDING EXCEPT AS NOTED IN 2f AND 2h.
      SEISMIC CATEGORY: II
      QUALITY CLASS: II +
      CODE GROUP: D +
   f. ALL PIPING, VALVES AND ASSOCIATED EQUIPMENT EXCLUDING DEMINERALIZER (CODE GROUP C) IN THE RWCU (SMALL BORE PIPES), CF, COND, CPR, MWR AND SA SYSTEMS IN RADWASTE BUILDING:
      SEISMIC CATEGORY: II
      QUALITY CLASS: II
      CODE GROUP: D
   g. PIPING, VALVES, AND ASSOCIATED COMPONENTS REFERRING TO THIS NOTE:
      SEISMIC CATEGORY: I
      QUALITY CLASS: I
      CODE GROUP: C
   h. PIPING AND VALVES BEYOND OUTERMOST ISOLATION VALVES IN RADWASTE BUILDING AND RADWASTE CORRIDOR:
      SEISMIC CATEGORY: II
      QUALITY CLASS: II
      CODE GROUP: D

   HANGERS TO BE DESIGNED TO SEISMIC CATEGORY I IN SEISMIC AREA, SUCH AS THE REACTOR BUILDING AND THE RADWASTE BUILDING CORRIDOR. HANGERS IN THE RADWASTE BLDG ARE QUALIFIED TO SEISMIC I LOADING.

   ø EXCEPT AS NOTED ON M619 INSTRUMENT CONNECTION DIAGRAMS.

   + SEE NOTE 12, CONTRACT 215, SECTION 15B, TABLE 2 NOTES.
3. ALL PIPING SYSTEMS IDENTIFIED BY THIS PREFIX "PI" SHALL BE SUPPLIED AND INSTALLED BY CONTRACT 220.
4. DELETED
5. ALL INSTRUMENT ROOT VALVES NOT LABELED WILL BE 3/4" GLOBE VALVES UNLESS SPECIFICALLY NOTED OTHERWISE.
6. (DELETED)
7. EXCESS FLOW CHECK VALVES SHALL BE TAGGED AS FOLLOWS: PI-EFC-X (PENETRATION NO.)
8. CONTAINMENT INSTRUMENTATION ROOT VALVES SHALL BE TAGGED AS FOLLOWS: PI-V-X (PENETRATION).
9. (DELETED)
10. ALL PIPING DOWN STREAM OF THE LAST ISOLATION VALVE, AND OPEN TO THE ATMOSPHERE WITH THE SUBSYSTEM DESIGNATION "SYSTEM" (50) THRU (59), SHALL BE CLASSIFIED AS CODE GROUP "D", WITH QUALITY CLASS AND SEISMIC CATEGORY PROVIDED BY THE APPLICABLE NOTES IN THIS DRAWING, EXCEPT WHERE THE APPLICABLE NOTES CALL FOR QUALITY CLASS II+, PIPING SHALL BE QUALITY CLASS II.
11. VALVES RWCU-V-210A&B ARE TO BE INSTALLED WITH THEIR FLOW ARROWS POINTED IN THE DIRECTION OF VALVES RWCU-V-234A&B.
12. LINE NUMBERS IN PARENTHESES DENOTE RWCU-DM-1A SYSTEM IDENTIFICATION.
13. NO UNIQUE LINE NUMBERS GIVEN FOR RWCU(ALL)-1 PIPING AS THESE ARE RADWASTE LINES.
14. ALL INSTRUMENT LINES ARE DESIGNATED BY CODE AND LINE NUMBER.
   a. EXAMPLE: LINES ORIGINATING OUTSIDE CONTAINMENT.
      1/2"PI(1)-ST – (H22-P021)-A6
      CODE DESIGNATION LINE NUMBER
   b. EXAMPLE: LINES ORIGINATING INSIDE CONTAINMENT.
      1/2"PI(1)-4S – X106
      CODE DESIGNATION LINE NUMBER
   c. EXAMPLE: CONTINUATION OF THE ABOVE LINE OUTSIDE CONTAINMENT IS DESIGNATED AS FOLLOWS, WITH LINE NUMBERS NOT SHOWN.
      1/2"PI(1)-ST-X106 – (H22-P021)
      CODE DESIGNATION LINE NUMBER
15. CODE BREAK DEFINITIONS FOR THERMOWELLS ARE SHOWN ON M610, "INSTALLATION OF THERMOWELLS AND SAMPLE PROBES."
16. RWCU-PS-114 CONTACTS JUMPERED CLOSED TO INDICATE NORMAL PUMP SUCTION PRESSURE.
17. VALVES RWCU-V-443 AND RWCU-SPV-443 HAVE BEEN DEACTIVATED TO PREVENT INADVERTENT RESIN SPILLS.
18. FOR SAMPLE FUNCTION & INSTRUMENTATION ASSOCIATED WITH THE SAMPLE POINTS SEE DWG. SERIES M607 STEAM & LIQUID SAMPLING FLOW DIAGRAMS AND DWG. SERIES 60A-00 SAMPLE RACKS DETAILS & FLOW DIAGRAMS.
19. SLUDGE LEVEL RWCU-LE-62A AND 62B, RWCU-LS-116A1/A2 AND RWCU-LS-116B1/B2 ARE SPARED IN PLACE. THEY HAVE BEEN HISTORICALLY UNRELIABLE. SLUDGE LEVEL IS PRESENTLY MORE RELIABLY DETERMINED AND CONTROLLED BY USING THE PPM (SOLID WASTE PROCESSING SYSTEM).
20. PRIOR TO 1995 RWCU PROCESS PIPING, PUMPS AND VALVES IN BETWEEN RWCU-V-5A/B AND RWCU-V-40 (BUT NOT INCLUDING THESE VALVES OR SAFETY RELATED INSTRUMENT LINES) WERE ASME III/3. IN 1995 BDC 55-2927-0A RECLASSIFIED THESE VALVES, PUMPS, AND PROCESS PIPING TO ANSI B31.1. FROM 2013 THESE VALVES, PUMPS, AND PROCESS PIPING HAVE BEEN RECLASSIFIED ASME III/3 (REF AR 282022).
21. SEE DWG M501 FOR FLOW DIAGRAM LEGENDS, SYMBOLS AND ABBREVIATIONS.
22. RELIEF VALVES RWCU-RV-36 AND RWCU-RV-26A/B ARE ASME SECTION VIII QUALITY CLASS IL.
23. RWCU-V-34 AND RWCU-V-35 UPSTREAM DISC/WEDGE IS DRILLED (0.25" DIAMETER ±0.005") TO PREVENT PRESSURE LOCKING.
24. PER EC 15262, THESE VALVES, PUMPS & PROCESS PIPING LOCATED IN THE RADWASTE BLDG HAVE BEEN RECLASSIFIED TO ANSI B31.1 (REF AR 282022).
25. PER EC 18434 A BYPASS LINE AROUND RWCU-V-32 IS INSTALLED BETWEEN RWCU-PI-8 AND RWCU-PS-13 WITHIN E-IR-P002. REFER TO CVI 02H22-05.26.

REFERENCES TO CONTRACT NUMBERS, SUCH AS 215, 206, 220, FOUND IN THE NOTES ON THIS DRAWING REFER TO ORIGINAL CONSTRUCTION DESIGN REQUIREMENTS.

CURRENT DESIGN REQUIREMENTS ARE DOCUMENTED IN THE STATION DESIGN SPECIFICATIONS AND ACTIVE CONTRACT SPECIFICATIONS WHICH STILL APPLY.

Columbia Generating Station
Final Safety Analysis Report

Reactor Water Cleanup System – P&ID

Draw. No. M523-1	Rev. 124	Figure 5.4-22.1

NOTES:
1. FOR NOTES AND LEGEND SEE M523-1.

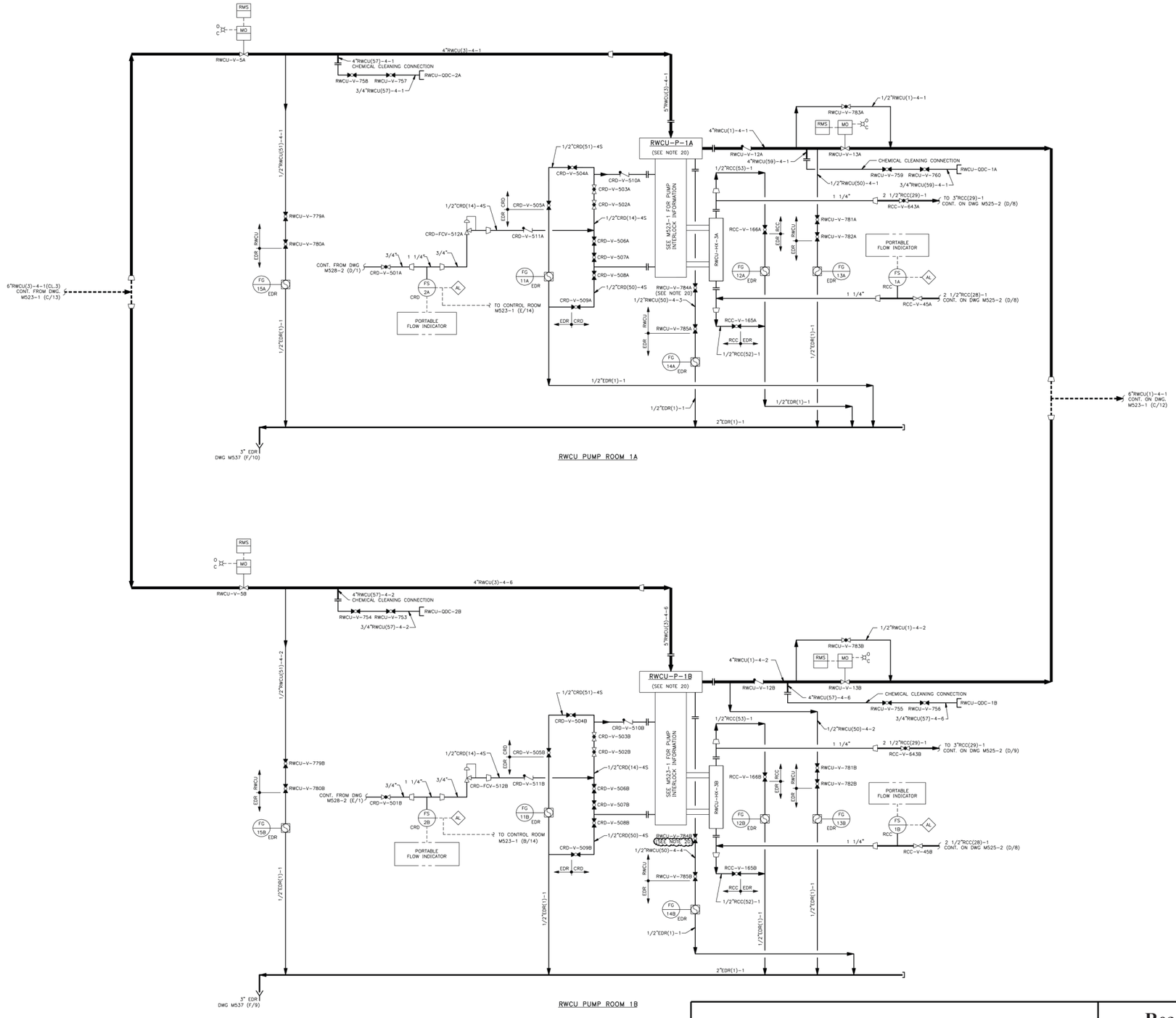

Columbia Generating Station
Final Safety Analysis Report

Reactor Water Cleanup System – P&ID

Draw. No. M523-2	Rev. 9	Figure 5.4-22.2

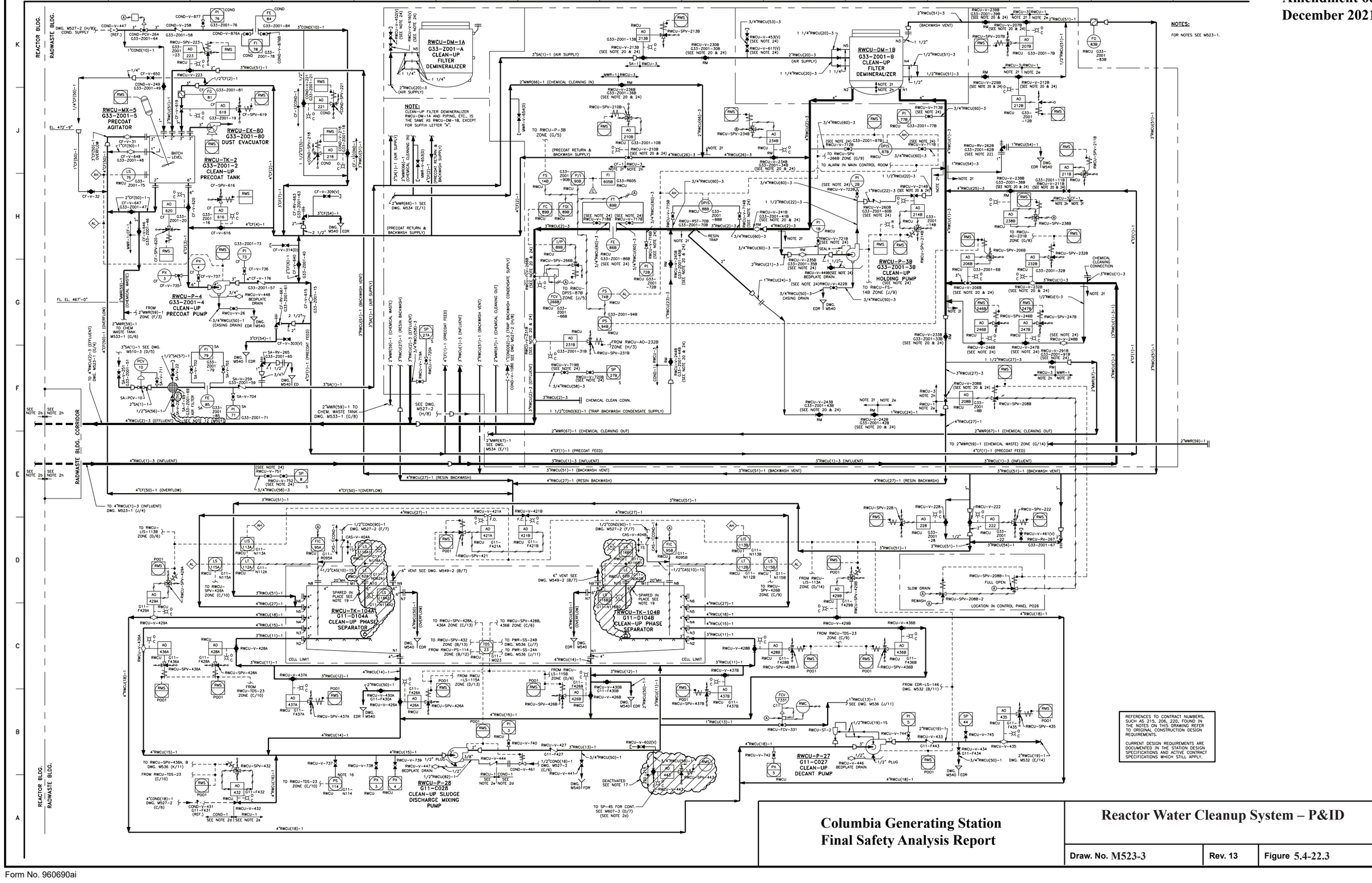

Columbia Generating Station
Final Safety Analysis Report

Reactor Water Cleanup System – P&ID

Draw. No. M523-3	Rev. 13	Figure 5.4-22.3

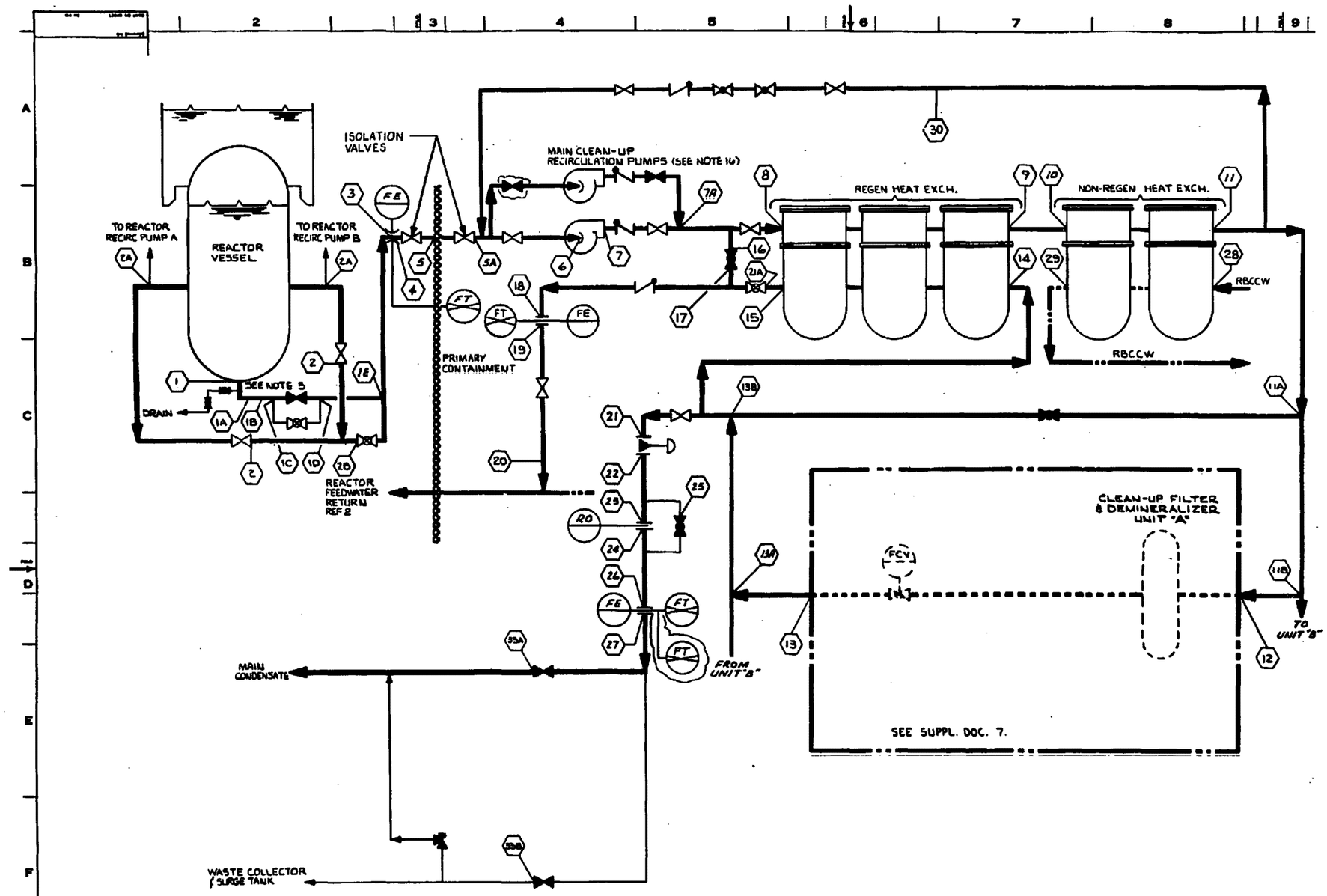

NOTES:

1. POSITIONS 28 & 29 INDICATE CLEANUP CONDITIONS WITH VARIOUS RBCCW INLET TEMPERATURES.
2. FOR BACKWASH & PRECOAT FREQUENCY SEE SUPPL. DOC. 4 OR 8.
3. FOR DETAILS ON FILTER & DEMINERALIZER SYSTEM SEE PROCESS FLOW DIAGRAM FILTER/DEMINERALIZER SUPPL. DOC. 7.
4. VALVES ARE SHOWN IN THEIR NORMAL OPERATING POSITION.
5. FOR DETAILS OF THE REACTOR VESSEL BOTTOM DRAIN CONNECTIONS SEE SUPPL. DOC. 6.
6. THE MAXIMUM ALLOWABLE PIPE FRICTION DROP FOR THE SIZING OF THE CLEANUP RECIRCULATION PUMPS' SUCTION PIPING FROM POSITIONS 1 THROUGH 4 SHALL BE CONTROLLED BY MODE "B" AND THE NPSH SHALL NOT BE BELOW THE MINIMUM AS SHOWN. MODE "A" SHALL CONTROL THE SIZING OF THE DISCHARGE PIPING AND THE MAXIMUM ALLOWABLE PIPE FRICTION DROP AS SHOWN SHOULD NOT BE EXCEEDED.
7. FOR DATA PERTAINING TO NUMBERS WITHIN HEXAGONS, REFER TO PROCESS DATA SUPPL. DOC. 1.
8. MODE "A" DESIGN BASIS FOR HEAT EXCHANGERS AND NO FLOW IS REQUIRED AT POSITION 16, 17, 21 THROUGH 27.
9. MODE "B" DESIGN BASIS FOR MAIN CLEAN-UP PUMP (MAX. CAPACITY AND MIN. NPSH) AND SIZING OF MAIN PUMPS SUCTION PIPING. NO FLOW REQ'D IN MODE "B" POSITION 8 THROUGH 15 & 21 THROUGH 29.
10. DELETED

NOTES CONTINUED ON SHEET NO. 2

SUPPLEMENTAL DOCUMENTS UNDER THE FOLLOWING IDENTITIES ARE TO BE USED IN CONJUNCTION WITH THIS DRAWING.

		REFERENCE DESIGNATOR
1.	REACTOR WATER CLEAN-UP SYS PROCESS DATA	-G33-1030
2.	REACTOR WATER CLEAN-UP SYSTEM P&ID	-G33-1010
3.	REACTOR WATER CLEAN-UP SYS DESIGN SPEC.	-G33-4010
4.	RADWASTE SYSTEM PD	-G11-1020
5.	REACTOR SYSTEM OUTLINE DWG.	-A62-2050
6.	REACTOR VESSEL OUTLINE DWG.	-B13-D003
7.	FILTER/DEMIN SUBSYS DEVICE LIST ITEM 201	-G33-Z001
8.	RADIOACTIVE WASTE	-A62-4110
9.	DELETED	
10.	DELETED	

Columbia Generating Station
Final Safety Analysis Report

Reactor Water Cleanup System Process Diagram

Draw. No. 02G33-04,20,1 | Rev. 7 | Figure 5.4-23.1

MODE A NORMAL OPERATION R.S.S. 1020, PSIA SEE NOTES 1,3 AND 9 ON SH. 1

LOCATION	1	2	3	4	5	6	7	8	9	10	11	12	13	14	15	16	17	18	19
FLOW, GPM	63	145	352.	352.	352.	352	352	358.	287.	287.	276.	134.	134.	269.	318.	/	/	318.	318.
TEMP. F.	533.	533.	533.	533.	533.	523.	524.	524.	230.	230.	120.	120.	120.	120.	437.	/	/	437.	437.
MAXIMUM PRESSURE	◄----1.----►					◄----165.----►TDH			◄----10.----►		◄----10.----►		◄----59.----►		◄----10.----►			◄----4.----►	
DROP PSID	ALLOWABLE PIPE FRICTION DROPS (SEE NOTE 6 ON SH.1) ◄----►30◄----►																		

(SEE NOTE 14)

LOCATION	20	21	22	23	24	25	26	27	28	29	28	29	28	29	28	29	30.		
FLOW, GPM	318.	/	/	/	/	/	/	/	468.	475.	516.	524.	610.	678.	678.	686.	7.		
TEMP. F.	437	/	/	/	/	/	/	/	85.	150.	95.	154.	100.	150.	105.	150.	120.		
MAXIMUM PRESSURE	◄----10.----►◄----10.----►◄----10.----►◄----10.----►																		
DROP PSID	◄----------																		

MODE B HOT SHUTDOWN OPERATION (WITH LOSS OF RPV RECIRC PUMPS). R.S.S. 1003, PSIA SEE NOTES 1 AND 9 ON SH. 1.

LOCATION	1	2	3	4	5	6	7	8	9	10	11	12	13	14	15	16	17	18	19
FLOW, GPM	162.	98.	358.	358	358.	358	358	/	/	/	/	/	/	/	/	358.	358.	358.	358.
TEMP. F.	540.	545.	543.	543.	543.	543.	544.	/	/	/	/	/	/	/	/	544.	544.	544.	544.
MAXIMUM PRESSURE		◄----1.----►				◄----165.----►TDH										◄----146.----►		◄----4.----►	
DROPS PSID	ALLOWABLE PIPE FRICTION DROPS SEE NOTE 6 ON SH. 1 ◄----DELTA P----►																		

LOCATION	20	21	22	23	24	25	26	27	28	29									
FLOW, GPM	358.	/	/	/	/	/	/	/	/	/									
TEMP. F.	544.	/	/	/	/	/	/	/	/	/									
MAXIMUM PRESSURE																			
DROP PSID	◄----------																		

DESIGN PRESSURE & TEMPERATURE GIVEN BELOW IS FOR INFORMATION ONLY AND IS THE BASIS FOR PIPING DESIGN. ESTIMATED LINE SIZES ARE FOR INFORMATION ONLY, ACTUAL LINE SIZES AS DETERMINED BY THE PIPING DESIGNER SHALL MEET THE PROCESS DATA HYDRAULIC REQUIREMENTS.

LOCATION	1--1A*	1A-1B**	1B-1E	1C-1D	2A-2B	2B-5A	5A-6	7-7A	7A-8	9-10	11-11B	11A-13B	11B-13A	13A-14	13A-39A	15-21A	21A-20	27-33B	
DESIGN PRESS.(PSIG)	1250.	1250.	1250.	1250.	1250.	1250.	1250.	1420.	1420.	1420.	1420.	1420.	1420.	1420.	1420.	1420.	***	1420.	
DESIGN TEMP. (DEG.F)	575.	575.	575.	575.	575.	575.	575.	575.	575.	575.	150.	150.	150.	150.	150.	575.	***	150.	
ESTIMATED LINE SIZE (IN)	2.0	2.5	4.0	1.0	4.0	6.0	3.0	3.0	4.0	4.0	4.0	4.0	3.0	4.0	4.0/6.0	4.0	4.0	4.0	

NOTES:

11. THE MINIMUM REQUIRED NPSH OF THE CLEANUP RECIRC. PUMPS IS 16.0 FEET BASED ON CONDITION SHOWN IN MODE B.
12. SEE PARAGRAPH 4.2.3 OF 25A1078 FOR STARTUP PROCEDURE.
13. DURING HOT STANDBY WITH ONE CLEANUP PUMP IN OPERATION. BLOWDOWN RATE IS APPROXIMATELY 126.0 GPM @ 545 DEGREES F.
14. COOLING WATER FLOW VALUES NOT TO BE EXCEEDED BY MORE THAN 6%.
15. ALL AUXILIARY PIPING IS DESIGNED TO 150. PSIG 150. DEG. F.
16. 100% CAPACITY PUMPS ARE ALTERNATED DURING OPERATION%.

LEGEND

* LOCATION 1A IS THE POINT WHERE THE BOTTOM DRAIN LINE CONNECTION EXITS FROM THE C.R.D. HOUSING AREA.

** LOCATION 1B IS THE POINT WHERE THE BOTTOM DRAIN LINE CONNECTION EXITS FROM THE REACTOR VESSEL PEDESTAL.

*** TO SAME CONDITIONS AS THE FEEDWATER PIPING (BY OTHERS).

/ INDICATES CONDITIONS FOR 0 FLOW RATE.

Columbia Generating Station Final Safety Analysis Report	Reactor Water Cleanup System Process Diagram		
	Draw. No. 02G33-04,20,2	Rev. 5	Figure 5.4-23.2

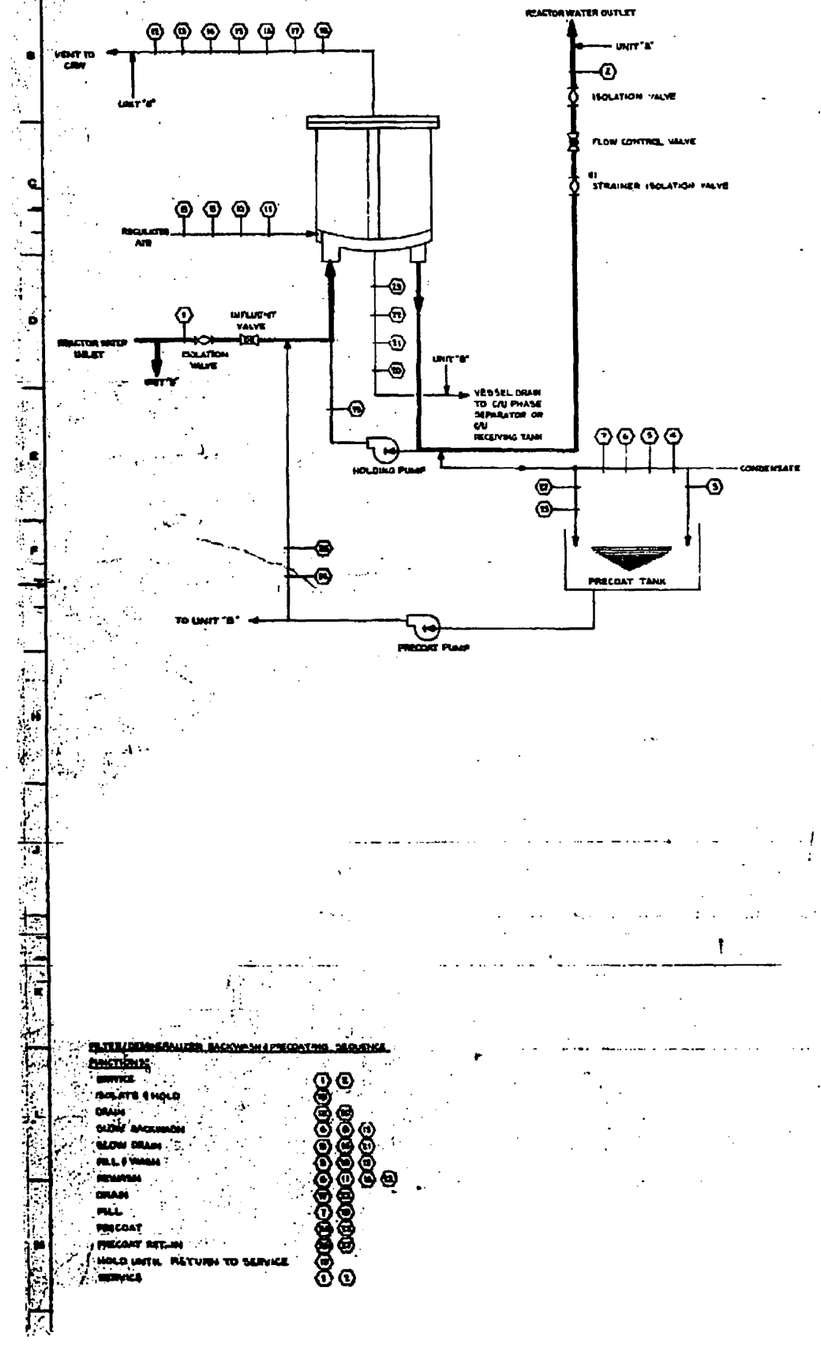

FILTER/DEMINERALIZER BACKWASH PRECOATING SEQUENCE

FUNCTION	1	2	3	4	5	6	7	8	9	10	11	12	13	14	15	16	17	18	19	20	21	22	23	24	25	26	27
SERVICE																											
ISOLATE & HOLD																											
DRAIN																											
SLOW BACKWASH																											
SLOW DRAIN																											
FILL & WASH																											
REMARIN																											
DRAIN																											
FILL																											
PRECOAT																											
PRECOAT SET-IN																											
HOLD UNTIL RETURN TO SERVICE																											
SERVICE																											

TABLE X (SEE TABLE XI)

P/D AREA = 64 ft²

TYPE REQUIREMENT	STATION SERVICES											EXHAUST AIR HANDLING							PROCESS PIPE SIZING								
COMMODITY			CONDENSATE					SERVICE AIR				RADIOACTIVE AIR							REACTOR WATER OR COND	REACTOR WATER + F/D SOLIDS	COND + F/D SOLIDS	COND + F/D SOLIDS	SLURRY COND + F/D RESIN	CNDS	CNDS	CNDS	
POSITION	1	2	3	4	5	6	7	8	9	10	11	12	13	14	15	16	17	18	19	20	21	22	23	24	25	26	27
PROCESS STEP	NORMAL OPER.	NORMAL OPER.	PRECOAT SLURRY	SLOW BACKWASH	FILL & WASH	REMARK	FILL	SLOW BACKWASH	SLOW DRAIN	FILL & WASH	REMARK	DRAIN	SLOW BACKWASH	SLOW DRAIN	FILL & WASH	REMARK	DRAIN	FILL	HOLD	DRAIN	SLOW DRAIN	REMARK	DRAIN	RES SAM PRECOAT	PRECOAT RETURN	PRECOAT RES TANK	PRECOAT RETURN TO SERVICE
PRESSURE, PSIG	SEE NOTE	SEE NOTE	25	25	15	15	25	20	20	20	20	5	5	5	5	5	5	5	25 (0) 15 (A)	20	20	20	20	50	50	50	50
TEMPERATURE, °F			80	80	80	80	80	60	60	60	60	60	60	60	60	60	60	60	80 (0) 120 (A)	120	80	80	80	80	80	80	80
FLOW RATE			65 GPM	75 GPM	65 GPM	65 GPM	65 GPM	135 GPM	135 GPM	135 GPM	135 GPM	199 SCFM	199 SCFM	199 SCFM	199 SCFM	199 SCFM	199 SCFM	199 SCFM	199 SCFM	143 GPM	115 GPM	115 GPM	115 GPM	65 GPM	135 GPM	135 GPM	100 GPM	100 GPM
FLOW TIME, MIN.	—	—	1.0	10	2	2	10	10	10	2	2	5	10	10	2	2	5	10	—	5	10	2	5	15	15	1	1
TOTAL FLOW	—	—	135 GAL	1125 GAL	725 GAL	725 GAL	725 GAL	1350 GAL	1350 GAL	270 GAL	270 GAL	995 SCF	1990 SCF	1990 SCF	398 SCF	398 SCF	995 SCF	2065 SCF	—	715 GAL	1150 GAL	230 GAL	575 GAL	1075 GAL	1350 GAL	100 GAL	100 GAL
TOTAL LBS SOLIDS	—	—	11.5 (0)	—	—	—	—	—	—	—	—	—	—	—	—	—	—	—	16 (0)	RESIDUAL	RESIDUAL	RESIDUAL	RESIDUAL	11.5 (0)	—	—	—

(0) SEE NOTE 2

TABLE XI (SEE TABLE XI)

P/D AREA = 33 ft²

TYPE REQUIREMENT	STATION SERVICES											EXHAUST AIR HANDLING							PROCESS PIPE SIZING								
COMMODITY			CONDENSATE					SERVICE AIR				RADIOACTIVE AIR							REACTOR WATER OR COND	REACTOR WATER + F/D SOLIDS	COND + F/D SOLIDS	COND + F/D SOLIDS	SLURRY COND + F/D RESIN	CNDS	CNDS	CNDS	
POSITION	1	2	3	4	5	6	7	8	9	10	11	12	13	14	15	16	17	18	19	20	21	22	23	24	25	26	27
PROCESS STEP	NORMAL OPER.	NORMAL OPER.	PRECOAT SLURRY	SLOW BACKWASH	FILL & WASH	REMARK	FILL	SLOW BACKWASH	SLOW DRAIN	FILL & WASH	REMARK	DRAIN	SLOW BACKWASH	SLOW DRAIN	FILL & WASH	REMARK	DRAIN	FILL	HOLD	DRAIN	SLOW DRAIN	REMARK	DRAIN	RES SAM PRECOAT	PRECOAT RETURN	PRECOAT RES TANK	PRECOAT RETURN TO SERVICE
PRESSURE, PSIG	SEE NOTE	SEE NOTE	25	15	15	15	25	20	20	20	20	0	5	5	5	5	5	5	25 (0) 15 (A)	20	20	20	20	35	35	35	35
TEMPERATURE, °F			80 (0) 120 (A)	80	80	80	80	60	60	60	60	60	60	60	60	60	60	60	80 (0) 120 (A)	120	80	80	80	80	80	80	80
FLOW RATE			50 GPM	175 GPM	125 GPM	125 GPM	75 GPM	150 GPM	150 GPM	150 GPM	150 GPM	221 SCFM	221 SCFM	221 SCFM	221 SCFM	221 SCFM	221 SCFM	221 SCFM	221 SCFM	55 GPM	175 GPM	125 GPM	125 GPM	75 GPM	150 GPM	150 GPM	110 GPM	110 GPM
FLOW TIME, MIN.	—	—	1.5	10	2	2	10	10	10	2	2	3	10	10	2	2	3	10	—	8	10	2	3	15	150	1	1
TOTAL FLOW	—	—	80 GAL	1400 GAL	250 GAL	250 GAL	750 GAL	1500 GAL	1500 GAL	300 GAL	300 SCF	340 SCF	2210 SCF	2210 SCF	442 SCF	442 SCF	663 SCF	2210 SCF	—	160 GAL	1500 GAL	250 GAL	225 GAL	1200 GAL	15000 GAL	150 GAL	110 GAL
TOTAL LBS SOLIDS	—	—	12 (0)	—	—	—	—	—	—	—	—	—	—	—	—	—	—	—	1.5 (0)	RESIDUAL	RESIDUAL	RESIDUAL	RESIDUAL	LBS (0)	—	—	—

(0) SEE NOTE 2

TABLE XII (SEE TABLE XI)

P/D AREA = 157 ft²

TYPE REQUIREMENT	STATION SERVICES											EXHAUST AIR HANDLING							PROCESS PIPE SIZING								
COMMODITY			CONDENSATE					SERVICE AIR				RADIOACTIVE AIR							REACTOR WATER OR COND	REACTOR WATER + F/D SOLIDS	COND + F/D SOLIDS	COND + F/D SOLIDS	SLURRY COND + F/D RESIN	CNDS	CNDS	CNDS	
POSITION	1	2	3	4	5	6	7	8	9	10	11	12	13	14	15	16	17	18	19	20	21	22	23	24	25	26	27
PROCESS STEP	NO ALL OPEN	NORMAL OPER.	PRECOAT SLURRY	SLOW BACKWASH	FILL & WASH	REMARK	FILL	SLOW BACKWASH	SLOW DRAIN	FILL & WASH	REMARK	DRAIN	SLOW BACKWASH	SLOW DRAIN	FILL & WASH	REMARK	DRAIN	FILL	HOLD	DRAIN	SLOW DRAIN	REMARK	DRAIN	RES SAM PRECOAT	PRECOAT RETURN	PRECOAT RES TANK	PRECOAT RETURN TO SERVICE
PRESSURE, PSIG	SEE NOTE	SEE NOTE	25	25	25	25	25	20	20	20	20	5	5	5	5	5	5	5	25 (0) 15 (A)	20	20	20	20	50	50	50	50
TEMPERATURE, °F			80	80	80	80	80	60	60	60	60	60	60	60	60	60	60	60	80 (0) 120 (A)	120	80	80	80	80	80	80	80
FLOW RATE			100 GPM	RESIDUAL	RESIDUAL	RESIDUAL	75 GPM	150 GPM	150 GPM	150 GPM	150 GPM	221 SCFM	221 SCFM	221 SCFM	221 SCFM	221 SCFM	221 SCFM	221 SCFM	221 SCFM	110 GPM	150 GPM	150 GPM	150 GPM	150 GPM	150 GPM	150 GPM	150 GPM	150 GPM
FLOW TIME, MIN.	—	—	2	4	2	2	4	4	2.5	2	2	2.9	4	2.9	2	2	2.9	4	—	2.3	2.5	2	2.5	17	15	1.5	1.5
TOTAL FLOW	—	—	200 GAL	600 GAL	500 GAL	500 GAL	300 GAL	600 GAL	375 GAL	450 SCF	450 SCF	639 SCF	884 SCF	639 SCF	442 SCF	442 SCF	639 SCF	884 SCF	—	345 GAL	375 GAL	300 GAL	375 GAL	2550 GAL	2250 GAL	225 GAL	165 GAL
TOTAL LBS SOLIDS	—	—	25 (0)	—	—	—	—	—	—	—	—	—	—	—	—	—	—	—	—	43.0	RESIDUAL	RESIDUAL	RESIDUAL	25 (0)	—	—	—

(0) SEE NOTE 2

NOTES:

1. FOR THESE VALUES AND REMAINDER OF SYSTEM VALUES: SEE REACTOR WATER CLEAN-UP SYSTEM P.D.
2. DRY WEIGHT VALUES; AS SHIPPED RESIN CONTAIN 50% MOISTURE (APPROXIMATE).

TABLE

TABLE	P.C.F.
I	7515D97 GROUP 1 / 7515D97 GROUP 1
II	7515C393 GROUP 2 7515D97 GROUP 2 7515D97 GROUP 3
III	7515D97 GROUP 2 7515D97 GROUP 3 7515D97 GROUP 2 PRECOAT GROUP 1
IV	7515D97 GROUP 1

Columbia Generating Station
Final Safety Analysis Report

Filter/Demineralization System - P&ID

Draw. No. 02G33-04,14,1	Rev. 5	Figure 5.4-24

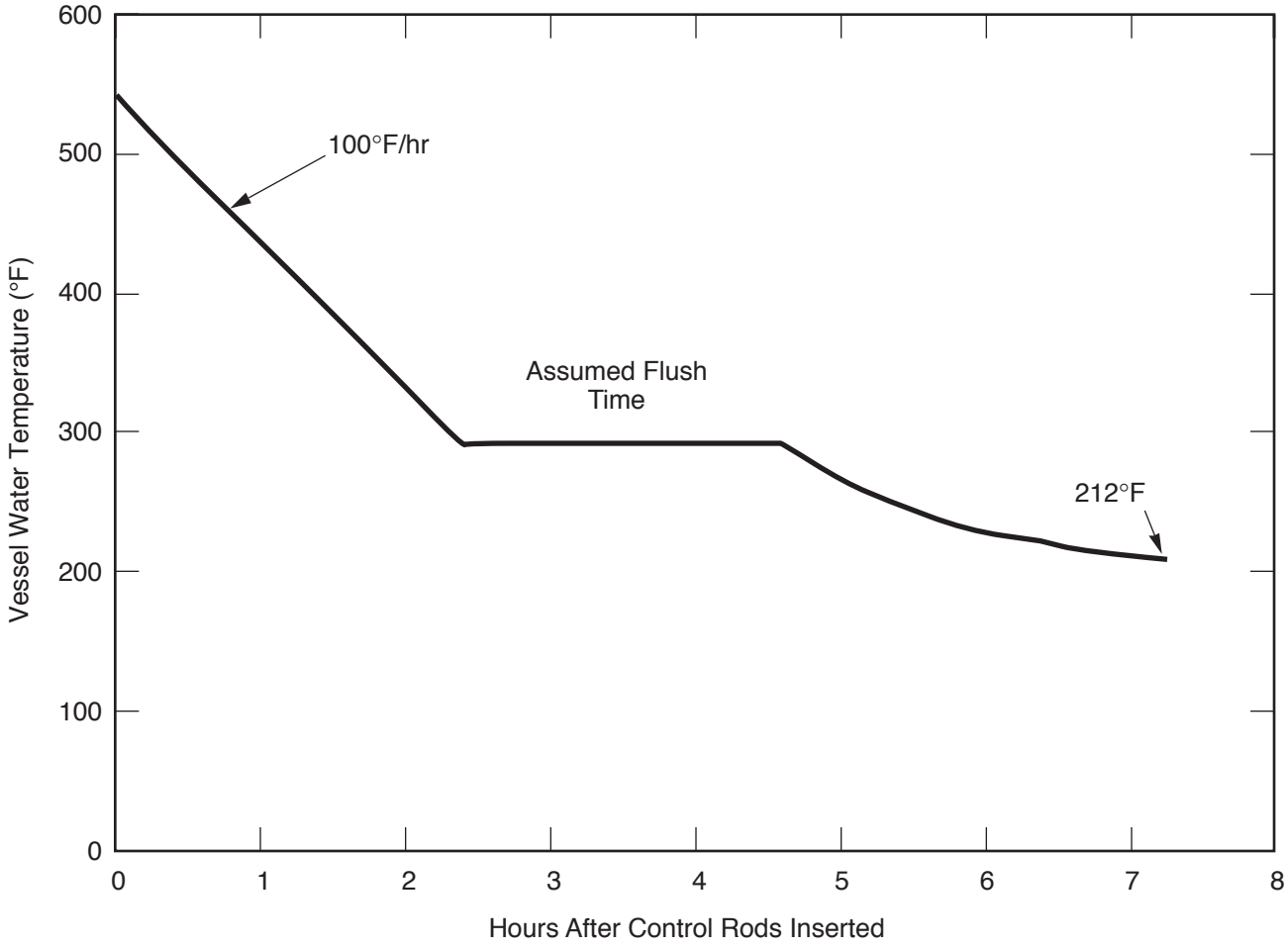

Columbia Generating Station **Final Safety Analysis Report**	**Vessel Coolant Temperature Versus Time** **(One Heat Exchanger Available)**		
	Draw. No. **960690.92**	Rev.	Figure **5.4-25**

Chapter 6

ENGINEERED SAFETY FEATURES

TABLE OF CONTENTS

Section — Page

6.1 ENGINEERED SAFETY FEATURE MATERIALS 6.1-2
6.1.1 METALLIC MATERIALS 6.1-2
6.1.1.1 Materials Selection and Fabrication 6.1-2
6.1.1.1.1 Material Specifications 6.1-2
6.1.1.1.2 Compatibility of Construction Materials with Core Cooling Water and Containment Sprays 6.1-2
6.1.1.1.3 Controls for Austenitic Stainless Steel 6.1-2
6.1.1.2 Composition, Compatibility, and Stability of Containment and Core Spray Coolants 6.1-3
6.1.2 ORGANIC MATERIALS 6.1-4
6.1.3 POSTACCIDENT CHEMISTRY 6.1-5

6.2 CONTAINMENT SYSTEMS 6.2-1
6.2.1 CONTAINMENT FUNCTIONAL DESIGN 6.2-1
6.2.1.1 Pressure Suppression Containment 6.2-1
6.2.1.1.1 Design Basis 6.2-1
6.2.1.1.2 Design Features 6.2-2
6.2.1.1.3 Design Evaluation 6.2-5
6.2.1.1.3.1 Summary Evaluation 6.2-5
6.2.1.1.3.2 Containment Design Parameters 6.2-5
6.2.1.1.3.3 Accident Response Analysis 6.2-6
6.2.1.1.3.3.1 Recirculation Line Rupture 6.2-7
6.2.1.1.3.3.1.1 Assumptions for Reactor Blowdown 6.2-7
6.2.1.1.3.3.1.2 Assumptions for Containment Pressurization 6.2-9a
6.2.1.1.3.3.1.3 Assumptions for Long-Term Cooling 6.2-9a
6.2.1.1.3.3.1.4 Initial Conditions for Accident Analyses 6.2-10
6.2.1.1.3.3.1.5 Short-Term Accident Response 6.2-10
6.2.1.1.3.3.1.6 Long-Term Accident Responses 6.2-11
6.2.1.1.3.3.1.7 Chronology of Accident Events 6.2-13
6.2.1.1.3.3.2 Main Steam Line Break 6.2-13
6.2.1.1.3.3.3 Hot Standby Accident Analysis 6.2-15
6.2.1.1.3.3.4 Intermediate Size Breaks 6.2-15
6.2.1.1.3.3.5 Small Size Breaks 6.2-16
6.2.1.1.3.3.5.1 Reactor System Blowdown Consideration 6.2-16
6.2.1.1.3.3.5.2 Containment Response 6.2-16
6.2.1.1.3.3.5.3 Recovery Operations 6.2-17

Chapter 6

ENGINEERED SAFETY FEATURES

TABLE OF CONTENTS (Continued)

Section — Page

6.2.1.1.3.3.5.4 Drywell Design Temperature Consideration 6.2-17
6.2.1.1.3.4 Accident Analysis Models 6.2-17
6.2.1.1.3.4.1 Short-Term Pressurization Model 6.2-17
6.2.1.1.3.4.2 Long-Term Cooling Mode 6.2-17
6.2.1.1.3.4.3 Analytical Assumptions 6.2-18
6.2.1.1.3.4.4 Energy Balance Consideration 6.2-18
6.2.1.1.4 Negative Pressure Design Evaluation 6.2-18
6.2.1.1.5 Suppression Pool Bypass Effects 6.2-20
6.2.1.1.5.1 Protection Against Bypass Paths 6.2-20
6.2.1.1.5.2 Reactor Blowdown Conditions and Operator Response 6.2-20
6.2.1.1.5.3 Analytical Assumptions 6.2-21
6.2.1.1.5.4 Analytical Results 6.2-21
6.2.1.1.6 Suppression Pool Dynamic Loads 6.2-22
6.2.1.1.7 Asymmetric Loading Conditions 6.2-22
6.2.1.1.8 Primary Containment Environmental Control 6.2-22
6.2.1.1.8.1 Temperature, Humidity, and Pressure Control During Reactor Operation 6.2-22
6.2.1.1.8.2 Primary Containment Purging 6.2-23
6.2.1.1.8.3 Post-LOCA 6.2-25
6.2.1.1.9 Postaccident Monitoring 6.2-25
6.2.1.2 Containment Subcompartments 6.2-25
6.2.1.3 Mass and Energy Release Analyses for Postulated Loss-of-Coolant Accidents 6.2-29
6.2.1.3.1 Mass and Energy Release Data 6.2-29
6.2.1.3.2 Energy Sources 6.2-30
6.2.1.3.3 Reactor Blowdown and Core Reflood Model Description 6.2-30
6.2.1.3.4 Effects of Metal-Water Reaction 6.2-31
6.2.1.3.5 Thermal Hydraulic Data for Reactor Analysis 6.2-31
6.2.1.3.6 Long Term Cooling Model Description 6.2-31
6.2.1.3.7 Single Failure Analysis 6.2-31
6.2.1.4 Not Applicable to BWR Plants 6.2-31
6.2.1.5 Not Applicable to BWR Plants 6.2-31
6.2.1.6 Testing and Inspection 6.2-31
6.2.1.6.1 Structural Integrity Test 6.2-31
6.2.1.6.2 Integrated Leak Rate Test 6.2-31
6.2.1.6.3 Drywell Bypass Leak Test 6.2-31

Chapter 6

ENGINEERED SAFETY FEATURES

TABLE OF CONTENTS (Continued)

Section — Page

6.2.1.6.4 Vacuum Relief Testing 6.2-32
6.2.1.7 Required Instrumentation 6.2-32
6.2.2 RESIDUAL HEAT REMOVAL CONTAINMENT HEAT REMOVAL SYSTEM 6.2-32
6.2.2.1 Design Bases 6.2-32
6.2.2.2 Residual Heat Removal Containment Cooling System Design 6.2-33
6.2.2.3 Design Evaluation of the Containment Cooling System 6.2-34
6.2.2.4 Tests and Inspections 6.2-36
6.2.2.5 Instrumentation Requirements 6.2-36
6.2.3 SECONDARY CONTAINMENT FUNCTIONAL DESIGN 6.2-36
6.2.3.1 Design Bases 6.2-36
6.2.3.2 System Design 6.2-38
6.2.3.3 Design Evaluation 6.2-41
6.2.3.3.1 Calculation Model 6.2-41
6.2.3.3.2 Results 6.2-42
6.2.3.4 Tests and Inspections 6.2-42
6.2.3.5 Instrumentation Requirements 6.2-43
6.2.4 CONTAINMENT ISOLATION SYSTEM 6.2-43
6.2.4.1 Design Bases 6.2-43
6.2.4.2 System Design 6.2-45
6.2.4.3 Design Evaluation 6.2-46
6.2.4.3.1 Introduction 6.2-46
6.2.4.3.2 Evaluation Against General Design Criteria 6.2-47
6.2.4.3.2.1 Evaluation Against Criterion 55 ..... 6.2-47
6.2.4.3.2.1.1 Influent Lines 6.2-47
6.2.4.3.2.1.1.1 Feedwater Lines 6.2-47
6.2.4.3.2.1.1.2 High-Pressure Core Spray Line 6.2-48
6.2.4.3.2.1.1.3 Low-Pressure Coolant Injection Lines 6.2-48
6.2.4.3.2.1.1.4 Control Rod Drive Lines 6.2-49
6.2.4.3.2.1.1.5 Residual Heat Removal and Reactor Core Isolation Cooling Head Spray Lines 6.2-50
6.2.4.3.2.1.1.6 Standby Liquid Control System Lines 6.2-50
6.2.4.3.2.1.1.7 Reactor Water Cleanup System 6.2-50
6.2.4.3.2.1.1.8 Recirculation Pump Seal Water Supply Line 6.2-51
6.2.4.3.2.1.1.9 Low-Pressure Core Spray Line 6.2-51
6.2.4.3.2.1.1.10 Residual Heat Removal Shutdown Cooling Return Lines 6.2-51

Chapter 6

ENGINEERED SAFETY FEATURES

TABLE OF CONTENTS (Continued)

Section — Page

6.2.4.3.2.1.2 Effluent Lines 6.2-51
6.2.4.3.2.1.2.1 Main Steam, Main Steam Drain Lines, and Residual Heat Removal/Reactor Core Isolation Cooling Steam Supply Lines 6.2-51
6.2.4.3.2.1.2.2 Recirculation System Sample Lines 6.2-52
6.2.4.3.2.1.2.3 Reactor Water Cleanup System 6.2-52
6.2.4.3.2.1.2.4 Residual Heat Removal Shutdown Cooling Line 6.2-52
6.2.4.3.2.1.3 Conclusion on Criterion 55 ..... 6.2-52
6.2.4.3.2.2 Evaluation Against Criterion 56 ..... 6.2-53
6.2.4.3.2.2.1 Influent Lines to Suppression Pool 6.2-53
6.2.4.3.2.2.1.1 Low-Pressure Core Spray, High-Pressure Core Spray, and Residual Heat Removal Test and Minimum Flow Bypass Lines 6.2-53
6.2.4.3.2.2.1.2 Reactor Core Isolation Cooling Turbine Exhaust, Vacuum Pump Discharge, and RCIC Pump Minimum Flow Bypass Lines 6.2-54
6.2.4.3.2.2.1.3 Residual Heat Removal Heat Exchanger Vent Lines 6.2-54
6.2.4.3.2.2.1.4 Low-Pressure Core Spray, High-Pressure Core Spray, and Residual Heat Removal Relief Valve Discharge Lines 6.2-54
6.2.4.3.2.2.1.5 Fuel Pool Cooling and Cleanup Return Lines 6.2-55
6.2.4.3.2.2.1.6 Deactivated Residual Heat Removal Steam Condensing Mode Steam Line Relief and Drain Lines 6.2-55
6.2.4.3.2.2.1.7 Process Sampling Suppression Pool Sample Return Line 6.2-55
6.2.4.3.2.2.2 Effluent Lines From Suppression Pool 6.2-55
6.2.4.3.2.2.2.1 High-Pressure Core Spray, Low-Pressure Core Spray, Reactor Core Isolation Cooling, and Residual Heat Removal Suction Lines 6.2-55
6.2.4.3.2.2.2.2 Fuel Pool Cooling Suction Line 6.2-55
6.2.4.3.2.2.2.3 PSR Suppression Pool Sample Line 6.2-55
6.2.4.3.2.2.3 Influent and Effluent Lines From Drywell and Suppression Chamber Free Volume 6.2-56
6.2.4.3.2.2.3.1 Containment Atmosphere Control Lines (Deactivated) 6.2-56
6.2.4.3.2.2.3.2 Containment Purge Supply, Exhaust, and Inerting Makeup Lines 6.2-56
6.2.4.3.2.2.3.3 Drywell and Suppression Chamber Air Sampling Lines 6.2-57
6.2.4.3.2.2.3.4 Suppression Chamber Spray Lines 6.2-57
6.2.4.3.2.2.3.5 Reactor Building to Wetwell Vacuum Relief Lines 6.2-57
6.2.4.3.2.2.3.6 Drywell Spray Lines 6.2-57
6.2.4.3.2.2.3.7 Reactor Closed Cooling Water Supply and Return Lines 6.2-58
6.2.4.3.2.2.3.8 Air Supply Lines 6.2-58
6.2.4.3.2.2.3.8.1 Check Valve Air Supply Lines 6.2-58

Chapter 6

ENGINEERED SAFETY FEATURES

TABLE OF CONTENTS (Continued)

Section — Page

6.2.4.3.2.2.3.8.2 Primary Containment Instrument Air System Nitrogen Supply Lines 6.2-58
6.2.4.3.2.2.3.8.3 Service Air System Maintenance Supply Line to the Drywell 6.2-58
6.2.4.3.2.2.3.9 Demineralized Water Maintenance Supply Line to the Drywell 6.2-58
6.2.4.3.2.2.3.10 Drywell Equipment and Floor Drain Lines 6.2-58
6.2.4.3.2.2.3.11 Traversing In-Core Probe (TIP) System Guide Tubes 6.2-59
6.2.4.3.2.2.4 Conclusion on Criterion 56 ..... 6.2-59
6.2.4.3.2.3 Evaluation Against Criterion 57 ..... 6.2-59
6.2.4.3.2.4 Evaluation Against Regulatory Guide 1.11, Revision 0 ..... 6.2-60
6.2.4.3.3 Failure Mode and Effects Analyses 6.2-60
6.2.4.3.4 Operator Actions 6.2-61
6.2.4.4 Tests and Inspections 6.2-61
6.2.5 COMBUSTIBLE GAS CONTROL IN CONTAINMENT 6.2-62
6.2.5.1 Design Bases 6.2-62
6.2.5.2 System Design 6.2-62
6.2.5.2.1 Atmosphere Mixing System 6.2-63
6.2.5.2.2 Hydrogen and Oxygen Concentration Monitoring System 6.2-63
6.2.5.2.3 Containment Purge 6.2-64
6.2.5.3 Design Evaluation 6.2-64
6.2.5.3.1 Hydrogen and Oxygen Generation 6.2-64
6.2.5.4 Testing and Inspections 6.2-65
6.2.5.5 Instrumentation Requirements 6.2-65
6.2.5.6 Materials 6.2-65
6.2.5.7 Containment Nitrogen Inerting System 6.2-65
6.2.6 CONTAINMENT LEAKAGE TESTING 6.2-65
6.2.6.1 Containment Leakage Rate Tests 6.2-65
6.2.6.2 Special Testing Requirements 6.2-66
6.2.7 REFERENCES 6.2-66

6.3 EMERGENCY CORE COOLING SYSTEM 6.3-1
6.3.1 DESIGN BASES AND SUMMARY DESCRIPTION 6.3-1
6.3.1.1 Design Bases 6.3-1
6.3.1.1.1 Performance and Functional Requirements 6.3-1
6.3.1.1.2 Reliability Requirements 6.3-2
6.3.1.1.3 Emergency Core Cooling System Requirements for Protection from Physical Damage 6.3-4

Chapter 6

ENGINEERED SAFETY FEATURES

TABLE OF CONTENTS (Continued)

Section — Page

6.3.1.1.4 Emergency Core Cooling System Environmental Design Basis 6.3-4
6.3.1.2 Summary Descriptions of Emergency Core Cooling System 6.3-5
6.3.1.2.1 High-Pressure Core Spray 6.3-5
6.3.1.2.2 Low-Pressure Core Spray 6.3-5
6.3.1.2.3 Low-Pressure Coolant Injection 6.3-5
6.3.1.2.4 Automatic Depressurization System 6.3-6
6.3.2 SYSTEM DESIGN 6.3-6
6.3.2.1 Schematic Piping and Instrumentation Diagrams 6.3-6
6.3.2.2 Equipment and Component Descriptions 6.3-6
6.3.2.2.1 High-Pressure Core Spray System 6.3-6
6.3.2.2.2 Automatic Depressurization System 6.3-9
6.3.2.2.3 Low-Pressure Core Spray System 6.3-9
6.3.2.2.4 Low-Pressure Coolant Injection System 6.3-11
6.3.2.2.5 Emergency Core Cooling System Discharge Line Fill System 6.3-14
6.3.2.2.6 Emergency Core Cooling System Suction Strainers 6.3-14
6.3.2.3 Applicable Codes and Classifications 6.3-18
6.3.2.4 Materials Specifications and Compatibility 6.3-18
6.3.2.5 System Reliability 6.3-18
6.3.2.6 Protection Provisions 6.3-19
6.3.2.7 Provisions for Performance Testing 6.3-19
6.3.2.8 Manual Actions 6.3-20
6.3.3 EMERGENCY CORE COOLING SYSTEM PERFORMANCE EVALUATION 6.3-20
6.3.3.1 Emergency Core Cooling System Bases for Technical Specifications 6.3-21
6.3.3.2 Acceptance Criteria for Emergency Core Cooling System Performance 6.3-21
6.3.3.3 Single Failure Considerations 6.3-22
6.3.3.4 System Performance During the Accident 6.3-22
6.3.3.5 Use of Dual Function Components for Emergency Core Cooling System 6.3-23
6.3.3.6 Emergency Core Cooling System Analyses for Loss-of-Coolant Accident 6.3-24
6.3.3.6.1 Loss-of-Coolant Accident Description 6.3-24
6.3.3.6.2 Loss-of-Coolant Accident Analysis Procedures and Input Variables 6.3-25
6.3.3.6.2.1 LOCA Analysis Methodology, GE Hitachi Nuclear Energy 6.3-26
6.3.3.6.2.2 DELETED 6.3-26
6.3.3.6.2.3 LOCA Analysis Input Variables 6.3-26
6.3.3.7 Break Spectrum Calculations 6.3-27
6.3.3.7.1 Break Spectrum Calculation, GE Hitachi Nuclear Energy 6.3-27

Chapter 6

ENGINEERED SAFETY FEATURES

TABLE OF CONTENTS (Continued)

Section — Page

6.3.3.7.2 DELETED. 6.3-27
6.3.3.8 Loss-of-Coolant Accident Analysis Conclusions 6.3-28
6.3.4 TESTS AND INSPECTIONS 6.3-28
6.3.4.1 Emergency Core Cooling System Performance Tests 6.3-28
6.3.4.2 Reliability Tests and Inspections 6.3-29
6.3.4.2.1 High-Pressure Core Spray Testing 6.3-29
6.3.4.2.2 Automatic Depressurization System Testing 6.3-29
6.3.4.2.3 Low-Pressure Core Spray Testing 6.3-30
6.3.4.2.4 Low-Pressure Coolant Injection Testing 6.3-30
6.3.5 INSTRUMENTATION REQUIREMENTS 6.3-30
6.3.6 REFERENCES 6.3-31

6.4 HABITABILITY SYSTEMS 6.4-1
6.4.1 DESIGN BASIS 6.4-1
6.4.2 SYSTEM DESIGN 6.4-2
6.4.2.1 Definition of Main Control Room Envelope 6.4-2
6.4.2.2 Ventilation System Design 6.4-2
6.4.2.3 Leaktightness 6.4-2
6.4.2.4 Interaction With Other Zones and Pressure Containing Equipment 6.4-2
6.4.2.5 Shielding Design 6.4-3
6.4.3 SYSTEM OPERATIONAL PROCEDURES 6.4-3
6.4.4 DESIGN EVALUATION 6.4-4
6.4.4.1 Radiological Protection 6.4-4
6.4.4.2 Toxic Gas Protection 6.4-4
6.4.4.2.1 Chlorine 6.4-4
6.4.4.2.2 Sodium Oxide 6.4-5
6.4.4.2.3 Miscellaneous Chemicals 6.4-7
6.4.5 TESTING AND INSPECTION 6.4-8
6.4.6 INSTRUMENTATION REQUIREMENTS 6.4-9
6.4.7 REFERENCES 6.4-9

Chapter 6

ENGINEERED SAFETY FEATURES

TABLE OF CONTENTS (Continued)

Section — Page

6.5 FISSION PRODUCT REMOVAL AND CONTROL SYSTEMS 6.5-1
6.5.1 ENGINEERED SAFETY FEATURE FILTER SYSTEMS 6.5-1
6.5.1.1 Design Bases 6.5-1
6.5.1.2 System Design 6.5-1
6.5.1.3 Design Evaluation 6.5-5
6.5.1.4 Tests and Inspections 6.5-5
6.5.1.5 Instrumentation Requirements 6.5-6
6.5.1.6 Materials 6.5-7
6.5.2 CONTAINMENT SPRAY SYSTEM 6.5-7
6.5.3 FISSION PRODUCT CONTROL SYSTEMS 6.5-8
6.5.3.1 Primary Containment 6.5-8
6.5.3.2 Secondary Containment 6.5-8
6.5.3.3 Standby Liquid Control (SLC) System 6.5-8

6.6 INSERVICE INSPECTION OF ASME CODE CLASS 2 AND CLASS 3 COMPONENTS 6.6-1

6.7 MAIN STEAM ISOLATION VALVE LEAKAGE CONTROL SYSTEM 6.7-1

Chapter 6

ENGINEERED SAFETY FEATURES

LIST OF TABLES

Number	Title	Page
6.1-1	Engineered Safety Features Systems and Related Systems Component Materials	6.1-7
6.2-1	Containment Design Parameters	6.2-70
6.2-2	Engineered Safety Systems Information for Containment Response Analyses	6.2-71
6.2-3	Accident Assumptions and Initial Conditions for Recirculation Line Break	6.2-73
6.2-4	Initial Conditions Employed in Containment Response Analyses	6.2-74
6.2-5	Summary of Accident Results for Containment Response to Limiting Line Breaks	6.2-76
6.2-6	Loss-of-Coolant Accident Long-Term Primary Containment Response Summary	6.2-77
6.2-7	Energy Balance for Design Basis Recirculation Line Break Accident	6.2-78
6.2-8	Accident Chronology Design Basis Recirculation Line Break Accident	6.2-79
6.2-9a	Reactor Blowdown Data for Recirculation Line Break - Original Rated Power	6.2-80
6.2-9b	Reactor Blowdown Data for Recirculation Line Break - Uprated Power	6.2-81
6.2-10	Reactor Blowdown Data for Main Steam Line Break	6.2-82
6.2-11	Core Decay Heat Following Loss-of-Coolant Accident for Containment Analyses	6.2-83

Chapter 6

ENGINEERED SAFETY FEATURES

LIST OF TABLES (Continued)

Number	Title	Page
6.2-12	Secondary Containment Design and Performance Data	6.2-84
6.2-13	DELETED (Replaced by Table 6.2-16)	
6.2-14	Containment Penetrations Subject to Type B Tests	6.2-85
6.2-15	DELETED	
6.2-16	Primary Containment Isolation Valves	6.2-86
6.2-17	DELETED	
6.2-18	DELETED	
6.2-19	Assumptions and Initial Conditions For Negative Pressure Design Evaluation	6.2-112
6.2-19a	Limiting Conditions for Maximum Negative Pressure Differentials Applied to Columbia Generating Station Specifications	6.2-113
6.2-20	Blowdown Mass/Energy Release Rates for a Double Ended Guillotine Break in 6-in. RCIC Line Steam	6.2-114
6.2-21	Blowdown Mass/Energy Release Rates for a Double Ended Guillotine Break in 6-in. RCIC Line Water	6.2-115
6.2-22	Blowdown Mass/Energy Release Rates for a Double Ended Guillotine Break in 24-in. Recirculation Line Steam	6.2-117
6.2-23	Blowdown Mass/Energy Release Rates for a Double Ended Guillotine Break in 24-in. Recirculation Line Water	6.2-118
6.2-24	Nodal Volume Data for the Case of a 6-in. RCIC Line Break and the Case of a 24-in. Recirculation Line Break	6.2-119
6.2-25	Flow Path Data for the Case of a 6-in. RCIC Line Break	6.2-120

Chapter 6

ENGINEERED SAFETY FEATURES

LIST OF TABLES (Continued)

Number	Title	Page
6.2-26	Flow Path Data for the Case of a 24-in. Recirculation Line Break	6.2-121
6.2-27	Peak Differential Pressure and Time of Peak	6.2-122
6.2-28	Analytical Sequence of Events in Secondary Containment	6.2-123
6.2-29	DELETED	
6.2-30	Post-LOCA Transient Heat Input Rates to Secondary Containment	6.2-124
6.3-1	Emergency Core Cooling System Design Parameters	6.3-37
6.3-2	DELETED	
6.3-2a	Plant Operational Parameters	6.3-38
6.3-2b	Fuel Parameters	6.3-39
6.3-2c	ECCS Parameters	6.3-40
6.3-3	Single Failure Considered in ECCS Performance Evaluation	6.3-44
6.3-4	DELETED	
6.3-4a	Event Scenario for 100% DBA Recirculation Suction Line Break HPCS DG Failure (Appendix K)	6.3-45
6.3-4b	Event Scenario for 0.07 ft^2 Recirculation Suction Line Break HPCS DG Failure (Appendix K)	6.3-46
6.3-5	ECCS Performance Analysis Results	6.3-47
6.5-1	Standby Gas Treatment System Component Description Per Unit	6.5-9

Chapter 6

ENGINEERED SAFETY FEATURES

LIST OF FIGURES

Number	Title
6.2-1	Typical 24 in. Downcomer Vent with Jet Deflector
6.2-2	Diagram of the Recirculation Line Break Location
6.2-3	Pressure Response for Recirculation Line Break (Initial Containment Pressure 2 psig)
6.2-4	Temperature Response for Recirculation Line Break (Initial Containment Pressure 2 psig)
6.2-5	Drywell Floor ΔP Response for Recirculation Line Break (Initial Containment Pressure 2 psig)
6.2-6	Containment Vent System Flow Rate for Recirculation (Initial Containment Pressure 2 psig)
6.2-7	Containment Pressure Response Cases A, B, and C - Original Rated Power
6.2-8	Drywell Temperature Response Cases A, B, and C - Original Rated Power
6.2-9	Suppression Pool Temperature Response, Long-Term Response - Original Rated Power
6.2-10	Containment Pressure Response - Case C Uprated Power
6.2-11	Drywell Temperature Response - Case C Uprated Power
6.2-12	Suppression Pool Temperature Response - Case C Uprated Power
6.2-13	Residual Heat Removal Rate
6.2-14	Effective Blowdown Area Main Steam Line Break
6.2-15	Bounding Pressure Response - Main Steam Line Break - Original Rated Power

Chapter 6

ENGINEERED SAFETY FEATURES

LIST OF FIGURES (Continued)

Number	Title
6.2-16	Bounding Temperature Response - Main Steam Line Break Original Rated Power
6.2-17	Pressure Response - Recirculation Line Break (0.1 ft^2) Original Rated Power
6.2-18	Temperature Response - Recirculation Line Break (0.1 ft^2) Original Rated Power
6.2-19	Schematic of ECCS Loop
6.2-20	Allowable Leakage Capacity
6.2-21	Containment Transient for Maximum Allowable Bypass Capacity $A\sqrt{x} = 0.050$
6.2-22	Containment Transient for $A/\sqrt{K} = 0.0045$ ft^2
6.2-23	Nodalization Scheme for Drywell
6.2-24	Venting Through Bulkhead Plate
6.2-25	Absolute Pressure in Upper Head Region and Lower Region from 6 in. RCIC Line Break
6.2-26	Absolute Pressure in Lower Region and Upper Head Region from 24 in. Recirculation Line Break
6.2-27	Downward Pressure Differential Across Bulkhead Plate from 6 in. Line Break
6.2-28	Upward Pressure Differential Across Bulkhead Plate from 24 in. Recirculation Line Break
6.2-29	Recirculation Break Blowdown Flow Rates Liquid Flow - Short-Term Original Rated Power

Chapter 6

ENGINEERED SAFETY FEATURES

LIST OF FIGURES (Continued)

Number	Title
6.2-30	Recirculation Break Blowdown Flow Rates Steam Flow - Short-Term Original Rated Power
6.2-31	Main Steam Line Break Blowdown Flow Rates
6.2-32	Suppression Pool Suction and Return Lines
6.2-33	Reactor Feedwater Line - Routing
6.2-34	Long-Term Post-LOCA Secondary Containment Temperature Transient
6.2-35	Short-Term Post-LOCA Secondary Containment Pressure Transient
6.2-36	Notes on Type C Testing
6.2-37	Isolation Valve Arrangement for Penetrations X-53, X-66, X-17A, and X-17B
6.2-38	Isolation Valve Arrangement for Penetrations X-89B, X-91, X-56, X-43A, and X-43B
6.2-39	Isolation Valve Arrangement for Penetrations X-117, X-118, and X-77Aa
6.2-40	Isolation Valve Arrangement for Penetrations X-21, X-45, and X-2
6.2-41	Isolation Valve Arrangement for Penetrations X-49, X-63, X-26, and X-22
6.2-42	Isolation Valve Arrangement for Penetrations X-96, X-97, X-98, X-99, X-102, X-103, X-104, X-105, X-11A, and X-11B
6.2-43	Isolation Valve Arrangement for Penetrations X-65, X-25A, and X-25B
6.2-44	Isolation Valve Arrangement for Penetration X-100
6.2-45	Isolation Valve Arrangement for Penetrations X-18A, X-18B, X-18C, X-18D, X-3, and X-67

Chapter 6

ENGINEERED SAFETY FEATURES

LIST OF FIGURES (Continued)

Number	Title
6.2-46	Isolation Valve Arrangement for Penetrations X-20, X-14, X-23, and X-24
6.2-47	Isolation Valve Arrangement for Penetrations X-92, X-12A, X-12B, X-12C, X-6, and X-8
6.2-48	Isolation Valve Arrangement for Penetrations X-19A, X-19B, and X-13
6.2-49	Isolation Valve Arrangement for Penetrations X-33, X-31, X-35, X-32, X-36, and X-34
6.2-50	Isolation Valve Arrangement for Penetrations X-46 and X-101
6.2-51	Isolation Valve Arrangement for Penetrations X-47 and X-48
6.2-52	Isolation Valve Arrangement for Penetrations X-66, X-67, X-119, and X-64
6.2-53	Isolation Valve Arrangement for Penetrations X-42D, 54Aa, 54Bf, 61F, 62F, 69C, 78D, 78E, and 82E
6.2-54	Isolation Valve Arrangement for Penetrations X-85A, X-29A, X-85C, X-29C, X-72F, and X-73E
6.2-55	Isolation Valve Arrangement for Penetrations X-5 and X-93
6.2-56	Isolation Valve Arrangement for Penetrations X-4 and X-116
6.2-57	Isolation Valve Arrangement for Penetrations X-73F, X-77Ac, X-77Ad, and X-80B
6.2-58	Isolation Valve Arrangement for Penetrations X-82D, X-82F, X-83A, X-84F, and X-88
6.2-59	Isolation Valve Arrangement for Penetrations X-94 and X-95
6.2-60	DELETED

Chapter 6

ENGINEERED SAFETY FEATURES

LIST OF FIGURES (Continued)

Number	Title
6.2-60A	Isolation Valve Arrangement for Penetration X-58
6.2-61	Sensible Energy Transient in the Reactor Vessel and Internal Metals - Original Rated Power
6.3-1	Head Versus Low-Pressure Core Spray Flow Used in LOCA Analysis
6.3-2	Head Versus Low-Pressure Coolant Injection Flow Used in LOCA Analysis
6.3-3	High-Pressure Core Spray Process Diagram (Sheets 1 and 2)
6.3-4	High-Pressure Core Spray and Low-Pressure Core Spray Flow Diagrams
6.3-5	Head Versus High-Pressure Core Spray Flow Used in LOCA Analysis
6.3-6	Low-Pressure Core Spray Process Diagram
6.3-7	Typical 48 in. Diameter Strainer
6.3-8	Typical 36 in. Diameter Strainer
6.3-9	Peak Cladding Temperature and Maximum Local Oxidation Versus Break Area - Hanford Original Rated Power

Chapter 6

ENGINEERED SAFETY FEATURES

The engineered safety features (ESF) of this plant are those systems provided to mitigate the consequences of postulated serious accidents, in spite of the fact that these accidents are very unlikely. The ESF can be divided into four general groups: containment systems, emergency core cooling systems, habitability systems, fission product removal and control systems. The systems in each general group are

a. Containment systems

    1. Primary containment,
    2. Secondary containment,
    3. Containment heat removal system,
    4. Containment isolation system, and
    5. Combustible gas control.

b. Emergency core cooling systems

    1. High-pressure core spray,
    2. Automatic depressurization system,
    3. Low-pressure core spray, and
    4. Low-pressure coolant injection.

c. Habitability systems

d. Fission product removal and control systems

Related systems which help to mitigate the consequences of such accidents are discussed in other sections. These are

a. Overpressurization protection,
b. Control rod drive housing support systems,
c. Control rod velocity limiter,
d. Main steam line flow restrictor, and
e. Standby liquid control system.

6.1 ENGINEERED SAFETY FEATURE MATERIALS

Materials used in the engineered safety feature (ESF) components have been evaluated to ensure that material interactions will not occur that could potentially impair operation. Materials have been selected to withstand the environmental conditions encountered during normal operation and postulated accidents. Their compatibility with core and containment spray solutions has been considered and the effects of radiolytic decomposition products have been evaluated.

Coatings used on exterior surfaces within the primary containment are suitable for the environmental conditions expected. Nonmetallic thermal insulation is required to have the proper ratio of leachable sodium plus silicate ions to leachable chloride ions to minimize the possibility of stress corrosion cracking.

6.1.1 METALLIC MATERIALS

6.1.1.1 Materials Selection and Fabrication

6.1.1.1.1 Material Specifications

Table 5.2-7 lists the principal pressure retaining materials and the appropriate material specifications for the reactor coolant pressure boundary components. Table 6.1-1 lists the principal pressure retaining materials and the appropriate material specifications for the ESF of the plant.

6.1.1.1.2 Compatibility of Construction Materials with Core Cooling Water and Containment Sprays

The compatibility of the reactor coolant with materials of construction exposed to the reactor coolant is discussed in Section 5.2.3. These same materials of construction are found in the ESF components.

Demineralized water with no additives is employed in BWR core cooling water and containment sprays. No detrimental effects will occur on the ESF construction materials from allowable contaminant levels in this high purity water.

6.1.1.1.3 Controls for Austenitic Stainless Steel

a. Control of the use of sensitized stainless steel

Wrought austenitic stainless steels that have been heated to temperatures over 800°F by means other than welding or thermal cutting are either resolution

annealed or otherwise demonstrated to be unsensitized in accordance with Regulatory Guide 1.44, Control of the Use of Sensitized Stainless Steel.

Controls to avoid significant sensitization discussed in Section 5.2.3 are the same for ESF components.

b. Process controls to minimize exposure to contaminants

Process controls for austenitic stainless steel discussed in Section 5.2.3 are the same for ESF components.

c. Use of cold worked austenitic stainless steel

Austenitic stainless steel with a yield strength greater than 90,000 psi was not used in ESF systems with the exception of screen material in the emergency core cooling system (ECCS) suppression pool strainers. Fabrication of the screens entailed operations that cold-worked the screen material (i.e., punching, drilling, de-burring, and/or forming). The cold-working caused yield stresses, as determined by hardness testing, to exceed 90,000 psi. The screens were found to be acceptable due to their nonpressure retaining function and the controlled chemistry and pool temperature of the suppression pool.

d. Thermal insulation requirements

All thermal insulation materials in ESF systems were selected, procured, tested, stored, and installed in accordance with Regulatory Guide 1.36, Revision 0. The leachable concentrations of chlorides, fluorides, sodium, and silicates for nonmetallic thermal insulation for austenitic stainless steel were required to meet the requirements of Regulatory Guide 1.36, Revision 0. Certified reports and test reports for the materials are available.

e. Avoidance of hot cracking of stainless steel

Process controls to avoid hot cracking discussed in Section 5.2.3 are the same for ESF components.

6.1.1.2 Composition, Compatibility, and Stability of Containment and Core Spray Coolants

Containment spray and core cooling water for the ESF systems are supplied from the condensate storage tanks or the suppression pool.

The quality of the water stored in the condensate storage tanks is maintained as follows:

Conductivity*	1 µS/cm at 25°C
Chlorides	0.05 ppm
pH*	6 to 8 at 25°C
Boron (as BO_3)	0.1 ppm

The suppression pool is initially filled with high-purity water from either the condensate storage or demineralized water makeup system. The chloride concentration in the suppression pool water is maintained at less than 0.5 ppm Cl. To maintain suppression pool water quality, provision is made for periodic filtration and demineralization using the fuel pool filter demineralizer or by means of blowdown and reprocessing through the radwaste treatment system.

6.1.2 ORGANIC MATERIALS

Significant quantities of organic materials that exist within the primary containment consist of cable insulating material, motor insulation material and coatings for containment surfaces, equipment, and piping.

Insulation properties for electric power cable are discussed in Section 8.3.1.2.3. Motors for the reactor recirculation pumps and drywell fan coil units contain small quantities of lubricating oil. Motor-operated valve bearings are grease lubricated.

Equipment, piping, and primary surfaces are provided with various coatings including galvanized zinc and aluminum. A minimal amount of hydrogen is liberated from zinc paint, galvanized, radiolytic and thermal decomposition of organic materials. Since Columbia Generating Station (CGS) is an oxygen control plant with an inerted containment, the hydrogen concentration is not flammable. Therefore, the minimal amount of hydrogen potentially generated by organic materials is not a threat to containment integrity.

The suppression chamber (wetwell) above the water level from el. 472 ft 0 in. is coated with one coat of Dimetcote 6 (inorganic zinc). Approximately 4000 ft^2 of this coating do not meet ANSI N101.4 requirements because of damage. The damage to the coating will not result in the failure of the coating to adhere to its substrate. Regardless, the design of the ECCS strainers assumes the complete failure of the coating system and the entrainment of the resulting particles on the strainer bed following a LOCA.

Coatings on insulated piping that were damaged during construction were not repaired, and the insulation will contain any flakes which may form.

---

* Conductivity and pH limits apply after correction for dissolved CO_2.

In general protective coatings, except NSSS vendor-supplied equipment and valve contracts placed prior to issuance of Regulatory Guide 1.54, Revision 0, have been applied in accordance with the guidelines included in ANSI N101.4-1972, "Quality Assurance for Protective Coatings Applied to Nuclear Facilities." In addition, the coatings and coating systems used meet the requirements of ANSI N101.2-1972 for the design basis accident. Certain items of equipment in the drywell have been coated with unqualified organic paint. There are an estimated 5000 ft^2 of unqualified organic paint in the drywell. Under certain postaccident conditions, the unqualified organic paint could fail in flakes and, therefore, has been evaluated as a potential source of debris which can clog emergency core cooling suction strainers. It is unlikely that all paint would fail simultaneously or that a significant portion of resulting paint flakes would be transported to the suppression pool. For conservatism, however, the design of the ECCS strainers is based on the complete failure of the unqualified coatings, their transport to the wetwell, and their eventual entrainment on the strainer beds.

6.1.3 POSTACCIDENT CHEMISTRY

Since the water chemistry conditions of the reactor coolant are similar to suppression pool water, with the exception being the addition of activation, corrosion, and fission products, no appreciable pH changes are expected to occur during the LOCA transient.

There are no soluble acids and bases within the primary containment that would change post-LOCA water chemistry. Since the pH does not change appreciably there are no detrimental effects on containment equipment or structures.

The design basis source term LOCA accident requires the addition of sodium pentaborate solution post-accident to maintain the suppression pool pH equal to or greater than 7.0. The Standby Liquid Control (SLC) tank contents are injected and mixed in the suppression pool within 8 hours post-accident. This action is discussed in the dose consequences analysis in Section 15.6.5.

Table 6.1-1

Engineered Safety Features Systems and Related
Systems Component Materials

Component	Form	Material	Specification (A/SA)[a]
RHR heat exchanger			
Head and shell	Plate	Carbon steel	516 Grade 70
Flanges and nozzles	Forging	Carbon steel	105 Grade 2
Tubes	U-Tube	Stainless steel	249 Type 304L
Tube sheet	Forging	Carbon steel	105 Grade 2
Bolts	Bar	Alloy steel	193 Grade B7
Nuts	Bar	Alloy steel	194 Grade 7
RHR pump			
Shell and dished head	Plate	Carbon steel	516 Grade 70
Suction nozzle	Pipe	Carbon steel	333 Grade 6
Flange	Forging	Carbon steel	350 Grade LF2
Impeller	Casting	Stainless steel	296 CA15
Shaft	Bar	Stainless steel	276 Type 410
Shell/suction/discharge plate	Plate	Carbon steel	516 Grade 70
Studs	Bar	Alloy steel	193 Grade B7
Nuts	Bar	Alloy steel	194 Grade 7
HPCS pump			
Shell and dished head	Plate	Carbon steel	516 Grade 70
Flange	Plate	Carbon steel	516 Grade 70
Discharge elbow	Pipe	Carbon steel	234 Grade WPB
Impeller	Casting	Stainless steel	296 CA15 or A487 CA6NM CL A
Shaft	Bar	Stainless steel	276 Type 410
Shell/suction/discharge plate	Plate	Carbon steel	516 Grade 70
Studs	Bar	Alloy steel	193 Grade B7
Nuts	Bar	Alloy steel	194 Grade 7
LPCS pump			
Shell and dished head	Plate	Carbon steel	516 Grade 70
Suction nozzle	Pipe	Carbon steel	333 Grade 6
Flange	Forging	Carbon steel	350 Grade LF2
Elbow	Pipe	Carbon steel	234 Grade WPB
Impeller	Casting	Stainless steel	296 CA15

Table 6.1-1

Engineered Safety Features Systems and Related
Systems Component Materials (Continued)

Component	Form	Material	Specification (A/SA)[a]
LPCS pump (Continued)			
Shaft	Bar	Stainless steel	276 Type 410
Shell/suction/discharge plate	Plate	Carbon steel	516 Grade 70
Studs	Bar	Alloy steel	193 Grade B7
Nuts	Bar	Alloy steel	194 Grade 7
HPCS valves			
Body, bonnet	Casting	Carbon steel	216 Grade WCB
	Forging	Carbon steel	105 or 105 Grade 2
Disc	Casting	Carbon steel	216 Grade WCB
	Casting	Alloy steel	217 Grade WC6
	Forging	Carbon steel	105 or 105 Grade 2
Stem	Bar	Stainless steel	479 Type 410
	Bar	Stainless steel	461 Grade 630
Studs	Bar	Alloy steel	193 Grade B7
Nuts	Bar	Alloy steel	194 Grade 7
	Bar	Carbon steel	194 Grade 2H
Isolation valves			
Body	Casting	Carbon steel	216 Grade WCB
	Forging	Stainless steel	182 Grade F316
	Forging	Carbon steel	350 Grade LF2
	Forging	Carbon steel	105 Grade 2
Bonnet	Forging	Carbon steel	105 Grade 2
	Casting	Carbon steel	216 Grade WCB
	Forging	Carbon steel	350 Grade LF2
Disc	Forging	Alloy steel	182 Grade F11
	Forging	Stainless steel	182 Grade F316
	Casting	Carbon steel	216 Grade WCB
	Forging	Carbon steel	105
	Forging	Carbon steel	350 Grade LF2
Stem	Bar	Stainless steel	276 Type 410
	Bar	Stainless steel	479 Type 410
	Bar	Stainless steel	564 Type 630
	Bar	Stainless steel	461 Grade 630
	Forging	Stainless steel	182 Grade F6a
Stud	Bar	Alloy steel	540 Grade B23
	Bar	Alloy steel	193 Grade B7

Table 6.1-1

Engineered Safety Features Systems and Related
Systems Component Materials (Continued)

Component	Form	Material	Specification (A/SA)[a]
Isolation valves (Continued)			
Nuts	Bar	Alloy steel	194 Grade 7
	Bar	Carbon steel	194 Grade 2H
Safety relief valves			
Body and bonnet	Forging	Carbon steel	105 Grade 2
Disc holder	Forging	Inconel 718	MS 5662B
Shaft	Bar	Stainless steel	582 Type 416
Spindle	Bar	17-4 pH (H1085)	564 Type 630
Studs	Bar	Alloy steel	193 Grade B7
Nuts	Bar	Carbon steel	194 Grade 2H
	Bar	Alloy steel	194 Grade 7
	Bar	Alloy steel	540 B23/B24 Class 3
Standby liquid control pump			
Fluid cylinder	Forging	Stainless steel	182 Grade F304
Cylinder head, valve cover, and stuffing box flange plate	Plate	Stainless steel	240 Type 304
Cylinder head extension, valve stop, and stuffing box	Shapes	Stainless steel	479 Type 304
Stuffing box gland and plungers	Bar	17-4 pH (H1075)	564 Grade 630
Studs	Bar	Alloy steel	193 Grade B7
Nuts	Bar	Alloy steel	194 Grade 7
Standby liquid control explosive valve			
Body and fittings	Shapes	Stainless steel	479 Type 304
Flanges	Forging	Stainless steel	182 Grade F304
Pipe	Pipe	Stainless steel	312 Type 304
Control rod velocity limiter			
	Casting	Stainless steel	351 Grade CF8 or 351 Grade CF3
Main steam flow restrictor			
Upstream part	Casting	Stainless steel	351 Grade CF8
Downstream part	Casting	Carbon steel	216 Grade WCB

Table 6.1-1

Engineered Safety Features Systems and Related
Systems Component Materials (Continued)

Component	Form	Material	Specification (A/SA)[a]
Piping			
HPCS	Pipe	Carbon steel	106 Grade B
LPCS	Pipe	Carbon steel	106 Grade B
RHR (unless otherwise noted)	Pipe	Carbon steel	106 Grade B
RHR connection to RRC	Pipe	Stainless steel	312 Type 304 or
	Pipe	Carbon steel	333 Grade 1 or 6
RHR spray headers	Pipe	Carbon steel	333 Grade 1 or 6
SRV discharge line	Pipe	Carbon steel	333 Grade 1 or 6
24-in. downcomer vents	Pipe	Carbon steel	106 Grade B or C and 312 Type 304L or 316L (bottom 6 in. only)
28-in. downcomer vents	Pipe	Carbon steel	155 KC70 Class 2 and 312 Type 304L or 316L (bottom 4 in. only)
	Fittings	Carbon steel	181 Grade II
	Fittings	Carbon steel	234 Grade WPB
	Fittings	Stainless steel	182 Grade F304
	Fittings	Stainless steel	182 Grade WP304
Containment			
Vessel	Plate	Carbon steel	516 Grade 70
	Plate	C-Mn-Si steel	537 Class 1
Structural members	Plate	Carbon steel	36
Downcomer bracing	Pipe	Carbon steel	106 Grade B
	Rings	Carbon steel	572 Grade 60
Pipe restraints	Plate	Carbon steel	516 Grade 70
Penetration nozzle	Pipe	Stainless steel	312 Grade TP 304
	Pipe	Carbon steel	333 Grade 1 or 6

Table 6.1-1

Engineered Safety Features Systems and Related
Systems Component Materials (Continued)

Component	Form	Material	Specification (A/SA)[a]
Containment (Continued)			
Guard pipe	Pipe	Carbon steel	333 Grade 1 or 6
Flued head	Forging	Carbon steel	350 Grade 1 Fl or 2
Drywell floor seal	Pipe	Stainless steel	312 Type 304L

[a] SA materials for ASME Section III pressure boundary item.

6.2 CONTAINMENT SYSTEMS

6.2.1 CONTAINMENT FUNCTIONAL DESIGN

6.2.1.1 Pressure Suppression Containment

6.2.1.1.1 Design Basis

The pressure suppression containment system, including subcompartments, meets the following functional capabilities:

a. The containment has the capability to maintain its functional integrity during and following the peak transient pressures and temperatures which would occur following any postulated loss-of-coolant accident (LOCA). The LOCA includes the worst single failure (which leads to maximum containment pressure and temperature) and is further postulated to occur simultaneously with loss of offsite power. In developing the load combinations, a safe shutdown earthquake (SSE) is postulated to occur simultaneously with the LOCA;

b. The containment in combination with other accident mitigation systems limits fission product leakage during and following the postulated design basis accident (DBA) to values less than leakage rates which would result in offsite doses greater than those set forth in 10 CFR 50.67;

c. The containment system will withstand coincident fluid jet forces associated with the flow from the postulated rupture of any pipe within the containment;

d. The containment design permits removal of fuel assemblies from the reactor core after the postulated LOCA;

e. The containment system is protected from or designed to withstand missiles from internal sources and excessive motion of pipes which could directly or indirectly endanger the integrity of the containment;

f. The containment system provides means to channel the flow from postulated pipe ruptures in the drywell to the pressure suppression pool;

g. The containment system is designed to allow for periodically conducting tests at the peak pressure calculated to result from the postulated DBA to confirm the leaktight integrity of the containment and its penetrations; and

h. The containment system, which includes the wetwell-to-drywell and the reactor building-to-wetwell vacuum breaker systems, can withstand the maximum

calculated external pressure on the containment vessel and upward pressure on the drywell floor due to containment spray actuation under the most severe conditions.

6.2.1.1.2 Design Features

A general description of the primary containment and its compliance with applicable codes, standards and guides is given in Section 3.8.2. The design of the primary containment incorporates the following:

a. Protection against dynamic effects

The design of the containment takes into account dynamic effects such as pipe whip, missiles, and jet loads which could result from a postulated LOCA. The design ensures that the capability of the containment and other engineered safety feature (ESF) equipment which mitigate the consequences of an accident are not impaired by the dynamic effects of the accident. The design provisions are discussed in Section 3.8.2.

The capability of the primary steel containment vessel to withstand the hydrodynamic effects of safety/relief valve (SRV) actuation or a LOCA and the proposed modifications, if any, for those portions and components of the vessel which are determined to have insufficient capability to accommodate these hydrodynamic effects are discussed in References 6.2-7 and 6.2-8.

b. Pressure suppression

The primary containment conforms to the fundamental principles of a MKII pressure suppression system. A comparison of the containment with similar containments is made in Table 1.3-4. The water stored in the suppression pool is capable of condensing the steam displaced into the wetwell through the downcomer vents, and the amount of water is sufficient such that operator action is not required for at least 10 minutes immediately following initiation of a LOCA. In addition, the design allows the water from any pipe break within the primary containment to drain back to the suppression pool. This “closed loop” ensures a continuous, adequate supply of water for core cooling.

c. Negative loading

The primary containment is designed for the following negative loadings:

1. A drywell pressure of 2.0 psi below reactor building pressure,
2. A wetwell pressure of 2.0 psi below reactor building pressure, and

3. An upward pressure across the diaphragm floor of 6.4 psid.

The nine 24-in. wetwell-to-drywell (WW-DW) and the three 24-in. reactor building-to-wetwell (RB-WW) vacuum breaker lines are sized to ensure that negative loadings are not exceeded. The vacuum breaker systems are described in Section 3.8.2.

The primary containment is designed for a total external pressure of 4 psid. However, since the compressed insulation between the concrete biological shield and the containment exerts a uniform 2 psid external pressure (half of the total external pressure differential allowed) the drywell pressure may be no less than 2 psi below the reactor building pressure.

d. Environmental conditions

The means to maintain the required environmental conditions inside the primary containment during normal operation is discussed in Section 6.2.1. With the exception of energy removal from the suppression pool, there are no requirements for environmental controls during a LOCA. All equipment required to mitigate the consequences of an accident is designed to perform the required functions for the required duration of time in the accident environment. The equipment accident environment is listed in Table 3.11-2.

e. Insulation

Inside the primary containment, the type of thermal insulation used for piping is primarily reflective metal panel. Nonmetallic mass insulation may also be used, in limited applications, where configuration of the component to be insulated precludes the use of reflective insulation (i.e., at pipe whip restraints, pipe supports, and interferences), and as stop gaskets between circumferential joints of reflective insulation. Also, nonmetallic insulation has been used to expedite the replacement of damaged reflective insulation panels when as low as is reasonably achievable (ALARA) considerations apply.

Reflective metal insulation panels used for the pipes are typically 2 ft long, 3 in. to 4 in. thick, and cover half of the pipe's circumference. These panels have 24-gauge stainless steel sheets which fully encase the 6 mil aluminum sheets. The panels used for the reactor pressure vessel (RPV) are larger, typically 2 ft x 6 ft, and are encased by 18-gauge stainless steel.

Panels on piping covering areas which require inservice inspection, such as welds, are fastened by quick-release buckle bands. Nonremovable insulation panels around pipes are fastened. The fasteners have been designed to be

weaker than the panels; therefore, it is postulated that some panels near a pipe break will be blown away, but that the panels themselves will not be sheared open.

The insulation panels and nonmetallic mass insulation that may be blown off constitute a credible debris source within the primary containment following a LOCA and seismic event. Equipment within the primary containment, if not designed to Seismic Category I standards, is at least supported so as to remain fastened during a seismic event.

Large pieces of insulation debris could be lodged against the perimeter of the jet deflectors, but the square footage of panels blown off the piping would not be sufficient to result in significant blockage of the downcomers. If metallic or nonmetallic insulation were blown off in a pipe break accident, it is probable that most debris would remain in large pieces and would be lodged against piping, equipment, or grating before it reached the drywell floor, or remain on the floor or be lodged against the jet deflector stiffener plates rather than be swept through the downcomers into the suppression pool. Insulation fibers and bits of foil liberated by the rupture has a higher potential of reaching the suppression pool, either during the immediate aftermath of the rupture or in the subsequent washdown by the containment sprays.

Insulation that is transported to the suppression pool could affect the performance of strainers in the wetwell. For this reason, the design of the strainers uses the following conservative bases:

1. Unlimited amounts of reflective metal insulation will be transported to the suppression pool;

2. Dependent on location in the drywell, from 21% to 76% of nonmetallic (fibrous) insulation dislodged by a pipe rupture event is transported to the wetwell. The higher transport percentage, 76%, is used when dislodged insulation is below drywell grating that would hinder the transport of insulation to the wetwell; and

3. All metallic and fibrous insulation that reaches the suppression pool following a LOCA is assumed to be entrained on the beds of operating ECCS strainers.

Strainers on the RHR and LPCS suction lines are located at a centerline of 11 ft 9 in. to 12 ft 4 in. above the pool bottom. The HPCS suction strainers are located 3 ft 6 in. above the pool bottom. These strainers are designed to operate with their beds entrained with the insulation and debris postulated in the

suppression pool following a LOCA. Based on the above, neither the metallic insulation panels nor the nonmetallic mass insulation will cause the degradation of the ECCS systems due to clogging of suction strainers. The analysis is discussed in Section 6.3.2.2.6.

6.2.1.1.3 Design Evaluation

6.2.1.1.3.1 Summary Evaluation. The key design parameters for the pressure suppression containment are shown in Table 6.2-1.

The design parameters are not determined from a single event but from an envelope of accident conditions.

A maximum drywell and suppression chamber pressure occurs near the end of a blowdown phase of a LOCA. Approximately the same peak pressure occurs for either the break of a recirculation line or a main steam line. Both accidents are evaluated.

The most severe drywell temperature condition (peak temperature and duration) occurs for a small primary system rupture above the reactor water level that results in the blowdown of reactor steam to the drywell (small steam break). To demonstrate that breaks smaller than the rupture of the largest primary system pipe will not exceed the containment design parameters, the containment system responses to an intermediate size liquid break and a small size steam break are evaluated. The results show that the containment design conditions are not exceeded for these smaller break sizes.

A single recirculation loop operation (SLO) containment analysis was performed. The peak wetwell pressure, diaphragm download and pool swell containment responses were evaluated over the entire SLO power/flow region.

The highest peak wetwell pressure during SLO occurred at the maximum power/flow condition of 73.8% power/64.3% core flow. This peak wetwell pressure decreased by about 1% (0.5 psi) compared to the rated two-loop operation pressure. The diaphragm floor download and pool swell velocity evaluated at the worst power/flow condition during SLO were found to be bounded by the rated power analysis.

The analytical results and method of analysis utilized to determine the seismic sloshing effects in the wetwell are discussed in Section 3.8.2.

6.2.1.1.3.2 Containment Design Parameters. Table 6.2-1 provides a listing of the key design parameters of the primary containment system including the design characteristics of the drywell, suppression pool, and pressure suppression vent system.

The downcomer loss coefficient is 2.77. This value was used in the assessment of the limiting containment performance analysis. The nonlimiting events not reanalyzed for the power uprate assumed a loss of coefficient of 1.9.

There are eighty-four 24-in. diameter downcomers and eighteen 28-in. downcomers. Three of the downcomers are capped.

No known studies have been performed to experimentally determine 4T test downcomer vent loss coefficients. However, in Pool Swell Analytical Model (PSAM)/4T test data comparisons (References 6.2-27 and 6.2-28), General Electric (GE) used downcomer vent loss coefficients of 2.51 and 3.50 for the 4T test 20-in. downcomers and 24-in. downcomers, respectively. These values were used as input to the GE PSAM and were calculated using information from Reference 6.2-15. The Columbia Generating Station (CGS) downcomer friction loss coefficient (fl/D) that is used in pool swell studies is equal to 1.9 (see Table 3.8-1). Use of a value of 1.9 versus a 4T value ensures conservatism in CGS pool swell studies in that lower values of fl/D maximizes pool swell velocity (see Figure 4-24 of Reference 6.2-5).

Table 6.2-2 provides the performance parameters of the related ESF systems which supplement the design conditions of Table 6.2-1 for containment cooling purposes during post blowdown long-term accident operation. Performance parameters given include those applicable to full capacity operation and to those conservatively reduced capacities assumed for containment analyses.

In addition to the power uprate analysis (Reference 6.2-35), an additional containment analysis was performed (Reference 6.2-42) to evaluate reduced ECCS flow rates (RHR/LPCI and LPCS). Tables 6.2-2 through 6.2-6 detail this analysis. The power uprate analysis remains bounding.

Additionally, Reference 6.2-42 documents an analysis to address General Electric (GE) Safety Communication (SC) 06-01. GE SC 06-01 indicated that long-term low-pressure injection with all pumps operating and one RHR heat exchanger inoperable may impact suppression pool temperature. The analysis concludes that, when only one RHR heat exchanger is operable, two LPCI pumps and the LPCS pump must be secured. The timing for this action is detailed in Reference 6.2-42. This action is required to not exceed the bounding suppression pool temperature of 204.5°F.

6.2.1.1.3.3 Accident Response Analysis. The containment functional evaluation was initially based on the consideration of several postulated accident conditions resulting in release of reactor coolant to the containment. These accidents include

a. An instantaneous guillotine rupture of a recirculation line,
b. An instantaneous guillotine rupture of a main steam line,
c. An intermediate size liquid line rupture, and

d. A small size steam line rupture.

The containment response to the main steam line, intermediate liquid line, and small size steam line breaks, were bounded by the recirculation line break. As part of the evaluations to support the reactor power uprate to 3486 MWth (References 6.2-32, 6.2-33, and 6.2-35), only the recirculation line rupture (Case C), the bounding event for containment response, was reanalyzed. The containment response analyses are not cycle specific nor are they part of the analyses performed to support core reload analyses. For further discussion, see Sections 6.2.1.1.3.3.4 and 6.2.1.1.3.3.5.

For the containment analysis performed to evaluate reduced ECCS flow rates (RHR/LPCI and LPCS), the recirculation line rupture (Cases A, B, and C) were re-analyzed. For further discussion, see Section 6.2.1.1.3.2.

6.2.1.1.3.3.1 Recirculation Line Rupture. Immediately following the rupture of the recirculation line, the flow out both sides of the break will be limited to the maximum allowed by critical flow consideration. Figure 6.2-2 shows a schematic view of the flow paths to the break. In the side adjacent to the suction nozzle, the flow will correspond to critical flow in the pipe cross section. In the side adjacent to the injection nozzle, the flow will correspond to critical flow at the 10 jet pump nozzles associated with the broken loop. In addition, the cleanup line cross tie will add to the critical flow area. Table 6.2-3 provides a summation of the break areas. References 6.2-1 and 6.2-2 provide a detailed description of the analytical models and assumptions for this event.

6.2.1.1.3.3.1.1 Assumptions for Reactor Blowdown. The response of the reactor coolant system during the blowdown period of the accident is analyzed using the following assumptions:

a. The initial conditions for the recirculation line break accident are such that the system energy is maximized and the system mass is minimized. That is

1. For the nonlimiting events which were not reanalyzed for power uprate, the reactor is operating at 104.2% of maximum power (3323 MWt). This maximizes the postaccident decay heat.

2. For the limiting events, the reactor is operating at 3702 MWt. This power corresponds to 102% of 3629 MWt. The analysis power was chosen to support a future uprate to 3629 MWt and bounds a power uprate to 3544 MWt (current).

3. For the containment analysis performed to evaluate reduced ECCS flow rates (RHR/LPCI and LPCS), the reactor is operating at 3556 MWt.

This power corresponds to 100.34% of 3544 MWt. ANS 5.1-1979+2σ with GE Service Information Letter (SIL) 636 is used to determine decay heat release.

4. For the nonlimiting events which were not reanalyzed for power uprate, the standby service water (SW) temperature is assumed to be 95°F, which exceeds the maximum expected temperature. For power uprate, a less conservative value of 90°F was assumed. For the containment analysis performed to evaluate reduced ECCS flow rates (RHR/LPCI and LPCS), 85°F is assumed for the first 10 hours and 90°F thereafter.

5. The suppression pool mass is at the low water level.

6. The suppression pool temperature is assumed to be at the maximum value allowed for power operation.

b. The recirculation line is considered to be severed instantly. This results in the most rapid coolant loss and depressurization of the vessel, with coolant being discharged from both ends of the break.

c. Reactor power generation ceases at the time of accident initiation because of void formation in the core region. Scram also occurs in less than 1 sec from receipt of the high drywell pressure signal. The difference between the shutdown times is negligible.

d. The vessel depressurization flow rates are calculated using Moody's critical flow model (Reference 6.2-3) assuming "liquid only" outflow, since this assumption maximizes the energy releases to the drywell. "Liquid only" outflow implies that all vapor formed in the RPV by bulk flashing rises to the surface rather than being entrained in the existing flow. In reality, some of the vapor would be entrained in the break flow which would significantly reduce the RPV discharge flow rates. Further, Moody's critical flow model, which assumes annular, isentropic flow, thermodynamic phase equilibrium, and maximizes slip ratio, accurately predicts vessel outflows through small diameter orifices. Actual rates through larger flow areas, however, are less than the model indicates because of the effects of a near homogeneous two-phase flow pattern and phase nonequilibrium. These effects are conservatively neglected in the analysis.

e. The core decay heat and the sensible heat released in cooling the fuel to approximately 550°F are included in the RPV depressurization calculation. The rate of energy release is calculated using a conservatively high heat transfer coefficient throughout the depressurization period. The resulting high-energy

release rate causes the RPV to maintain nearly rated pressure for approximately 20 sec. The high RPV pressure increases the calculated blowdown flow rates which is again conservative for analyses purposes. The sensible energy of the fuel stored at temperatures below approximately 550°F is released to the vessel fluid along with the stored energy in the vessel and internals as vessel fluid temperatures decrease below approximately 550°F during the remainder of the transient calculation.

f. The main steam isolation valves (MSIV) start closing at 0.5 sec after the accident. They are fully closed in the shortest possible time of 3 sec following closure initiation. In actuality, the closure signal for the MSIV will occur from low reactor water level, so the valves will not receive a signal close for at least 4 sec, and the closing time may be as long as 5 sec. By assuming rapid closure of these valves, the RPV is maintained at a high pressure, which maximizes the calculated discharge of high-energy water into the drywell. For the containment analysis performed to evaluate reduced ECCS flow rates (RHR/LPCI and LPCS), MSIV closure was assumed to start at 0 seconds after the accident.

g. For the nonlimiting events which are not reanalyzed for power uprate, reactor feedwater flow was assumed to stop instantaneously at time zero. Since feedwater flow tends to depressurize the RPV, thereby reducing the discharge of steam and water into the drywell, this assumption is conservative for the analysis since MSIV closure cuts off motive power to the steam-driven feedwater pumps.

For the limiting events, reactor feedwater flow is assumed to continue until all high-energy feedwater is injected into the reactor.

h. A complete loss of offsite power occurs simultaneously with the pipe break. This condition results in the loss of power conversion system equipment and also requires that all vital systems for long-term cooling be supported by onsite power supplies.

6.2.1.1.3.3.1.2 Assumptions for Containment Pressurization. The pressure response of the containment during the blowdown period of the accident is analyzed using the following assumptions:

a. Thermodynamic equilibrium exists in the drywell and suppression chamber. Since nearly complete mixing is achieved, the analysis assumes complete mixing;

b. The fluid flowing through the drywell-to-suppression pool vents is formed from a homogeneous mixture of the fluid in the drywell. The use of this assumption results in complete carryover of the drywell air and a higher positive flow rate of liquid droplets which conservatively maximizes vent pressure losses;

c. The fluid flow in the drywell-to-suppression pool vents is compressible except for the liquid phase; and

d. No heat loss from the gases inside the primary containment is assumed. In reality, condensation of some steam on the drywell surfaces would occur.

6.2.1.1.3.3.1.3 Assumptions for Long-Term Cooling. Following the blowdown period, the ECCS provides water for core flooding, containment spray, and long-term decay heat removal. The containment pressure and temperature response during this period is analyzed using the following assumptions:

a. The low-pressure coolant injection (LPCI) pumps are used to flood the core prior to 600 sec after the accident. The HPCS is assumed available for the entire accident;

b. After 600 sec, the LPCI pump flow may be diverted from the RPV to the containment spray. This is manual operation. Actually, the containment spray need not be activated at all to keep the containment pressure below the containment design pressure. Prior to activation of the containment cooling mode (assumed at 600 sec after the accident) all of the LPCI pump flow will be used to flood the core. In response to indications of significant core damage the operators are directed to initiate containment spray to reduce potential radioactivity released;

c. The effects of decay energy, stored energy, and energy from the metal-water reactor on the suppression pool temperature are considered;

d. The suppression pool is assumed to be the only heat sink available in the containment system;

e. After approximately 600 sec, it is assumed that the RHR heat exchangers commence to remove energy from the containment by means of recirculation cooling from the suppression pool with the SW system; and

f. The performance of the ECCS equipment during the long-term cooling period is evaluated for each of the following three cases of interest:

Case A: Offsite power available - all ECCS equipment and containment spray operating.

Case B: Loss of offsite power, minimum diesel power available for ECCS and containment spray.

Case C: Same as Case B except no containment spray.

Case C is limiting as it results in the highest peak suppression pool temperature and containment pressure. Since power uprate does not change the results of the three cases relative to each other, Case C was reevaluated for power uprate conditions.

6.2.1.1.3.3.1.4 Initial Conditions for Accident Analyses. Table 6.2-4 provides the initial reactor coolant system and containment conditions used in the accident response evaluation. The tabulation includes parameters for the reactor, the drywell, the suppression chamber, and the vent system. Table 6.2-3 provides the initial conditions and numerical values assumed for the recirculation line break accident as well as the sources of energy considered prior to the postulated pipe rupture. The assumed conditions for the reactor blowdown are also provided. The mass and energy release sources and rates for the containment response analyses are given in Section 6.2.1.3.

6.2.1.1.3.3.1.5 Short-Term Accident Response. The calculated containment pressure and temperature responses for the recirculation line break are shown in Figures 6.2-3 and 6.2-4, respectively.

The suppression chamber is pressurized by the carryover of noncondensables from the drywell and by heatup of the suppression pool. As the vapor formed in the drywell is condensed in the suppression pool, the temperature of the suppression pool water peaks and the suppression chamber pressure stabilizes. The drywell pressure stabilizes at a slightly higher pressure; the

difference being equal to the downcomer submergence. During the RPV depressurization phase, most of the noncondensable gases initially in the drywell are forced into the suppression chamber. However, following the depressurization, noncondensables will redistribute between the drywell and suppression chamber by means of the vacuum breaker system. This redistribution takes place as steam in the drywell is condensed by the relatively cool ECCS water which is beginning to cascade from the break causing the drywell pressure to decrease.

The ECCS supplies sufficient core cooling water to control core heatup and limit metal-water reaction to less than 0.07%. After the RPV is flooded to the height of the jet pump nozzles, the excess flow discharges through the recirculation line break into the drywell. This flow of water (steam flow is negligible) transports the core decay heat out of the RPV, through the broken recirculation line, in the form of hot water which flows into the suppression chamber by means of the drywell-to-suppression chamber vent system. This flow provides a heat sink for the drywell atmosphere and thereby causes the drywell to depressurize.

Table 6.2-5 provides the peak pressure, temperature, and time parameters for the recirculation line break as predicted for the conditions of Table 6.2-4 and corresponds with Figures 6.2-3 and 6.2-4. Figure 6.2-5 shows the time dependent response of the floor (deck) differential pressure.

During the blowdown period of the LOCA, the pressure suppression vent system conducts the flow of the steam-water gas mixture in the drywell to the suppression pool for condensation of the steam. The pressure differential between the drywell and suppression pool controls this flow. Figure 6.2-6 provides the mass flow versus time relationship through the vent system for this accident.

6.2.1.1.3.3.1.6 Long-Term Accident Responses. To assess the adequacy of the containment following the initial blowdown transient an analysis was made of the long-term temperature and pressure response following the accident. The analysis assumptions are those discussed in Section 6.2.1.1.3.3.1.3 for the three cases of interest. The initial pressure response of the containment (the first 600 sec after break) is the same for each case. As can be seen from Figures 6.2-7, 6.2-8, and 6.2-9, Case C is the limiting event.

Case A: All ECCS equipment operating - with containment spray

This case assumes that offsite ac power is available to operate all cooling systems. During the first 600 sec following the pipe break, the HPCS, LPCS, and all LPCI pumps are assumed operating. All flow is injected directly into the reactor vessel.

After 600 sec, both RHR heat exchangers are activated to remove energy from the containment. During this mode of operation the flow from two of the LPCI pumps is routed through the RHR heat exchangers where it is cooled before being discharged into the containment spray header.

The containment pressure response to this set of conditions is shown as Curve A in Figure 6.2-7. The corresponding drywell and suppression pool temperature responses are shown as Curve A in Figures 6.2-8 and 6.2-9. After the initial blowdown and subsequent depressurization due to core spray and LPCI core flooding, energy addition due to core decay heat results in a gradual pressure and temperature rise in the containment. When the energy removal rate of the RHR system exceeds the energy addition rate from the decay heat, the containment pressure and temperature reach a second peak value and decrease gradually. Table 6.2-6 summarizes the cooling equipment operation, the peak long term containment pressure following the initial blowdown peak, and the peak suppression pool temperature.

Case B: Loss of offsite power - with delayed containment spray

This case assumes no offsite power is available following the accident and that only the HPCS and one LPCI diesel (Divisions 3 and 2, respectively) are available. For the first 600 sec following the break, one HPCS, and two LPCI pumps are used exclusively for core cooling. After 600 sec, the RHR heat exchanger is activated. The flow from one pump is routed through the heat exchanger and is discharged to the containment spray line. The second LPCI pump is assumed to be shut down. The containment pressure response to this set of conditions is shown as Curve B in Figure 6.2-7. The corresponding drywell and suppression pool temperature responses are shown as Curve B in Figures 6.2-8 and 6.2-9. A summary of this case is given in Table 6.2-6.

Case C: Loss of offsite power - no containment spray

This case assumes no offsite power is available following the accident and that only the HPCS and one LPCI diesel (Divisions 3 and 2, respectively) are available. For the first 600 sec following the accident, one HPCS, and two LPCI pumps are used exclusively to cool the core.

After 600 sec, one RHR heat exchanger is activated to remove energy from the containment, but containment spray is not activated. The LPCI flow cooled by the RHR heat exchanger is discharged into the RPV. The second LPCI pump is assumed to be shut down. The containment pressure response to this set of conditions is shown in Figure 6.2-10. The corresponding drywell and suppression pool temperature responses are shown in Figures 6.2-11 and 6.2-12. A summary of this case is given in Table 6.2-6.

When comparing the “spray” Case B with the “no spray” Case C at the same power level, the same RHR heat exchanger duty is obtained since the suppression pool temperature response is approximately the same as shown in Figure 6.2-9. Thus, the same amount of energy is

removed from the pool whether the exit flow from the RHR heat exchanger is injected into the reactor vessel or into the drywell as spray. Although the peak containment pressure is higher for the "no spray" case, the pressure is significantly less than the containment design pressure.

Figure 6.2-13 shows the rate at which the RHR system heat exchanger will remove heat from the suppression pool following a LOCA.

6.2.1.1.3.3.1.7 Chronology of Accident Events. A complete description of the containment response to the design basis recirculation line break has been given in Sections 6.2.1.1.3.3.1.5 and 6.2.1.1.3.3.1.6. Results for this accident are shown in Figures 6.2-3 through 6.2-6, 6.2-10, 6.2-11, 6.2-12, and 6.2-13. A chronological sequence of events for this accident from time zero is provided in Table 6.2-8.

6.2.1.1.3.3.2 Main Steam Line Break. The sequence of events immediately following the rupture of a main steam line between the reactor vessel and the flow limiter have been determined. The flow in both sides of the break will accelerate to the maximum allowed by the critical flow considerations. In the side adjacent to the reactor vessel, the flow will correspond to critical flow in the steam line break area. Blowdown through the other side of the break will occur because the steam lines are all interconnected at a point upstream of the turbine by the bypass header. This interconnection allows primary system fluid to flow from the three unbroken steam lines, through the header and back into the drywell by means of the broken line. Flow will be limited by critical flow in the steam line flow restrictor. The total effective flow area is given in Figure 6.2-14 which is the sum of the steam line cross sectional area and the flow restrictor area. A slower closure rate of the isolation valves in the broken line would result in a slightly longer time before the total valve area of the three unbroken lines equals the flow limiter area in the broken line. The effective break area in this case would start to reduce at 5 sec rather than 4.3 sec as demonstrated in Table 6.2-10. The drywell design temperature (340°F) was determined based on a bounding analysis of the superheated gas temperature. The short-term peak drywell temperature is controlled by the initial steam flow rate during a large steam line break. Since the vessel dome pressure assumed for the original rated analysis (1055 psia) is unchanged by power uprate, the initial break flow rate for this event is not impacted. This event was not reanalyzed for power uprate as there would be no impact on the original rated short-term peak drywell temperature value. The peak drywell pressure occurs before the reduction in effective break area due to MSIV closure and is, therefore, insensitive to a possible slower closure time of the isolation valves in the broken lines. The mass and energy release rates are provided in Section 6.2.1.3.

Immediately following the break, the total steam flow rate leaving the vessel would be approximately 8600 lb/sec, which exceeds the steam generation rate in the core of 4140 lb/sec. This steam flow to steam generation mismatch causes an initial vessel depressurization of the reactor vessel at a rate of approximately 42 psi/sec. Void formation in the reactor vessel water causes a rapid rise in the water level, and it is conservatively assumed that the water level reaches the vessel steam nozzles 1 sec after the break occurs. The water level rise time of

1 sec is the minimum that could occur under any reactor operating condition. From that time on, a two-phase mixture corresponding to the overall average vessel quality would be discharged from the break. The use of the overall average vessel quality results in fluid qualities which are considerably lower than would actually occur. Thus, the drywell peak pressure, which increases with decreasing break flow quality, is maximized. During the first second of the blowdown, the blowdown flow will consist of saturated steam. This steam will enter the containment in a super-heated condition of approximately 330°F.

Figures 6.2-15 and 6.2-16 show the pressure and temperature responses of the drywell and suppression chamber during the primary system blowdown phase of the steam line break accident for original rated power. The short-term performance is not affected by power uprate. The long-term response is bounded by the recirculation suction line break. Therefore, no steam line break analysis was performed for the power uprate condition.

Figure 6.2-16 shows that the drywell atmosphere temperature approaches 330°F after 1 sec of primary system steam blowdown. At that time, the water level in the vessel will reach the steam line nozzle elevation and the blowdown flow will change to a two-phase mixture. This increased flow causes a more rapid drywell-pressure rise. The peak differential pressure occurs shortly after the vent clearing transient. As the blowdown proceeds, the primary system pressure and fluid inventory will decrease, resulting in a decrease in the vent system and the differential pressure between the drywell and suppression chamber.

Table 6.2-5 presents the peak pressures, peak temperatures, and times of this accident as compared to the recirculation line break.

Approximately 50 sec after the start of the accident, the primary system pressure will have dropped to the drywell pressure and the blowdown will be over. At this time the drywell will contain primarily steam, and the drywell and suppression chamber pressures will stabilize. The pressure difference corresponds to the hydrostatic pressure of vent submergence.

The drywell and suppression pool will remain in this equilibrium condition until the reactor vessel refloods. During this period, the emergency core cooling pumps will be injecting cooling water from the suppression pool into the reactor. This injection of water will eventually flood the reactor vessel to the level of the steam line nozzles and the ECCS flow will spill into the drywell. The water spillage will condense the steam in the drywell and, thus, reduce the drywell pressure. As soon as the drywell pressure drops below the suppression chamber pressure, the drywell vacuum breakers will open and noncondensable gases from the suppression chamber will flow back into the drywell until the pressure in the two regions equalize.

6.2.1.1.3.3.3 Hot Standby Accident Analysis. This section is not applicable to BWR-5.

6.2.1.1.3.3.4 Intermediate Size Breaks. The failure of a recirculation line results in the most severe pressure loading on the drywell structure. However, as part of the original containment performance evaluation, the consequences of intermediate breaks were also analyzed. This classification covers those breaks for which the blowdown will result in reactor depressurization and operation of the ECCS. This section describes the consequences to the containment of a 0.1 ft^2 break below the RPV water level. This break area was chosen as being representative of the intermediate size break area range. These breaks can involve either reactor steam or liquid blowdown. The consequences of an intermediate size break are less severe than from a recirculation line rupture. Because these breaks are not limiting, they were not reanalyzed for power uprate.

Following the 0.1 ft^2 break, the drywell pressure increases at approximately 1 psi/sec. This drywell pressure transient is sufficiently slow so that the dynamic effect of the water in the vents is negligible and the vents will clear when the drywell-to-suppression chamber differential pressure is equal to the vent submergence hydrostatic pressure.

Figures 6.2-17 and 6.2-18 show the drywell and suppression chamber pressure and temperature response for original rated power conditions at 3323 MWt. The ECCS response is discussed in Section 6.3. Approximately 5 sec after the 0.1 ft^2 break occurs, air, steam, and water will start the flow from the drywell to the suppression pool. The steam will be condensed and the air will enter the suppression chamber free space. The continual purging of drywell air and steam to the suppression chamber will result in a pressurization of both the wetwell and drywell to about 25 and 30 psig, respectively. The containment will continue to gradually increase in pressure due to long-term pool heatup until the vessel is depressurized and reflooded.

The ECCS will be initiated as the result of the 0.1 ft^2 break and will provide emergency cooling of the core. The operation of these systems is such that the reactor will be depressurized in approximately 600 sec. This will terminate the blowdown phase of the transient.

In addition, the suppression pool end of blowdown temperature will be the same as that of the recirculation line break because essentially the same amount of primary system energy is released during the blowdown. After reactor depressurization and reflood, water from the ECCS will begin to flow out the break. This flow will condense the drywell steam and eventually cause the drywell and suppression chamber pressures to equalize in the same manner as following a recirculation line rupture.

The subsequent long-term suppression pool and containment heatup transient that follows is essentially the same as for the recirculation line break.

6.2.1.1.3.3.5 Small Size Breaks.

6.2.1.1.3.3.5.1 Reactor System Blowdown Consideration. This section discusses the containment transient associated with small primary systems blowdowns. The sizes of primary system ruptures in this category are those blowdowns that will not result in reactor depressurization due either to loss of reactor coolant or automatic operation of the ECCS equipment. Following the occurrence of a break of this size, it is assumed that the reactor operators will initiate an orderly plant shutdown and depressurization of the reactor system. The thermodynamic process associated with the blowdown of primary system fluid is one of constant enthalpy. If the primary system break is below the water level, the blowdown flow will consist of reactor water. Blowdown from reactor pressure to the drywell pressure will flash approximately one-third of this water to steam and two-thirds will remain as liquid. Both phases will be at saturation conditions corresponding to the drywell pressure.

If the primary system rupture is located so that the blowdown flow consists of reactor steam only, the resultant steam temperature in the containment is significantly higher than the temperature associated with liquid blowdown. This is because the constant enthalpy depressurization of high pressure, saturated steam will result in superheated conditions inside containment.

A small reactor steam leak (resulting in superheated steam) will impose the most severe temperature conditions on the drywell structures and the safety equipment in the drywell. For larger steam line breaks, the superheat temperature is nearly the same as for small breaks, but the duration of the high temperature condition for the larger break is less. This is because the larger breaks will depressurize the reactor more rapidly than the orderly reactor shutdown that is assumed to terminate the small break. Like the main steam line break, the small steam line break is also governed by the dome pressure. The small break response is also governed by the operator actions. Since the vessel dome pressure assumed for the original rated analysis (1055 psia) is unchanged by power uprate the initial break flow rate for this event will be unchanged. Assuming the operator action is the same, the event would be terminated in the same manner as for the original rated power analysis. Thus, the small steam line break was not reanalyzed for power uprate.

6.2.1.1.3.3.5.2 Containment Response. For drywell design consideration, the following sequence of events is assumed to occur. With the reactor and containment operating at the maximum normal conditions, a small break occurs that allows blowdown of reactor steam to the drywell. The resulting pressure increase in the drywell will lead to a high drywell pressure

signal that will scram the reactor and activate the containment isolation system. The drywell pressure will continue to increase at a rate dependent on the size of the steam leak. The pressure increase will lower the water level in the vents until the level reaches the bottom of the vents. At this time, air and steam will start to enter the suppression pool. The steam will be condensed and the air will be carried over to the suppression chamber free space. The air carryover will result in a gradual pressurization of the suppression chamber at a rate dependent upon the size of the steam leak. Once all the drywell air is carried over to the suppression chamber, pressurization of the suppression chamber will cease and the system will reach an equilibrium condition. The drywell will contain only superheated steam and continued blowdown of reactor steam will condense in the suppression pool. The suppression pool temperature will continue to increase until the RHR heat exchanger heat removal rate is greater than the decay heat release rate.

6.2.1.1.3.3.5.3 Recovery Operations. The plant operators will be alerted to the incident by the high drywell pressure signal and the reactor scram. For the purposes of evaluating the duration of the superheat condition in the drywell, it is assumed that their response is to shut the reactor down in an orderly manner while limiting the reactor cool down rate to 100°F/hr. This will result in the reactor primary system being depressurized within 6 hr. At this time, the blowdown flow to the drywell will cease and the superheat condition will be terminated. If the plant operators elect to cool down and depressurize the reactor primary system more rapidly than at 100°F/hr, then the drywell superheat condition will be shorter.

6.2.1.1.3.3.5.4 Drywell Design Temperature Consideration. For drywell design purposes, it is assumed that there is a blowdown of reactor steam for the 6-hr cool down period. The corresponding design temperature is determined by finding the combination of primary system pressure and drywell pressure that produces the maximum superheat temperature. Drywell design temperature requirements are defined by the most limiting environmental conditions assumed to exist inside primary containment during a design basis accident (see Table 3.11-2). As noted in Table 3.11-2, the design temperature of 340°F is the superheat temperature based on a steam leak with the reactor vessel pressure of 400-500 psi and a design containment pressure of 45 psig.

6.2.1.1.3.4 Accident Analysis Models.

6.2.1.1.3.4.1 Short-Term Pressurization Model. The analytical models, assumptions, and methods used by GE to evaluate the containment response during the reactor blowdown phase of a LOCA are described in References 6.2-1 and 6.2-2.

6.2.1.1.3.4.2 Long-Term Cooling Mode. During the long-term, post-blowdown containment cooling transient, the ECCS flow path is a closed loop and the suppression pool mass will be constant. This closed cooling loop provides subcooled water to the vessel from the suppression pool removing residual decay heat. As a result long-term steaming will not occur. This approach is conservative since removal of energy by steaming would require that more energy

be retained in the vessel, and therefore, not released to the containment to maintain the vessel fluid inventory at saturation temperature. The cooling model loop is shown in Figure 6.2-19. There is no change in mass storage in the system (the RPV is reflooded during the blowdown phase of the accident).

The break flow area is assumed to remain constant as a function of time following decompression of the broken line and/or closure of the MSIV during the first few seconds of the reactor blowdown.

6.2.1.1.3.4.3 Analytical Assumptions. The key assumptions employed in the model are as follows:

a. The drywell and suppression chamber atmosphere are both saturated (100% relative humidity),

b. The drywell atmosphere temperature is equal to the temperature of the coolant spilling from the RPV or to the spray temperature if the sprays are activated,

c. The suppression chamber atmosphere temperature is equal to the suppression pool temperature or to the spray temperature if the sprays are activated, and

d. No credit is taken for heat losses from the primary containment or to the containment internal structure.

6.2.1.1.3.4.4 Energy Balance Consideration. The energy balance in the suppression pool is described in References 6.2-1 and 6.2-2.

6.2.1.1.4 Negative Pressure Design Evaluation

Columbia Generating Station does not have automatic initiation of any drywell spray and controls operation of the sprays through procedural guidance. The design and sizing of the reactor building to wetwell (RB-WW) and wetwell to drywell (WW-DW) vacuum breakers considered inadvertent operation of containment sprays as limiting transients. Although this is conservative for design considerations, inadvertent spraying of the drywell is considered more than one single failure or operator error.

The simultaneous operation of both containment spray loops after large and small-break LOCA could be a limiting transient for the containment negative pressure. However this event is based on more than one single failure or operator error and neglects the consideration for adequate core cooling by using both RHR loops. Using the single-failure criterion and considering the need for adequate core cooling following a large-break LOCA, the containment sprays would not be initiated until later in the event by spraying WW first followed by DW with the worse single failure being a RB-WW vacuum breaker to open. This scenario is nonlimiting with respect to floor uplift or negative pressure.

The limiting transient for negative containment pressurization is a small-break LOCA with a coincident single failure of an RB-WW vacuum breaker. This transient uses both WW and DW sprays of a single RHR loop. WW/DW sprays are initiated when required by the Emergency Operating Procedures. The small break within the drywell forces the noncondensables into the wetwell airspace, leaving a steam atmosphere inside the drywell. Once drywell sprays are initiated, pressure rapidly drops and the RB-WW and WW-DW vacuum breakers open to mitigate the transient.

The analysis performed to determine peak negative pressure after large and small-line-break LOCA made the following conservative assumptions:

a. Maximum spray flow of 8200 gpm (combined drywell and wetwell flow),

b. 100% spray efficiency,

c. 50°F spray temperature,

d. Noncondensable gases are purged into the wetwell as a result of the LOCA,

e. The drywell is full of steam at a pressure above wetwell due to the hydrostatic head from downcomer submergence, and

f. Single failure of RB-WW vacuum breaker.

g. Reactor Power is 3702 MWth.

The initial conditions used in the analysis are provided in Table 6.2-19. A summary of the results is provided in Table 6.2-19a.

Drywell spray is not required to maintain the primary containment below design pressure nor is it required for containment cooling. If, following a small-line-break LOCA, the noncondensable gases are purged into the wetwell airspace, the EOPs would direct the operator to initiate wetwell sprays to control wetwell pressure. If containment pressure continues to increase, drywell sprays will be initiated. The appropriate plant procedures direct the operator to initiate drywell sprays in response to indications of significant fuel failures during a LOCA. For the scenario in which containment sprays are initiated, the limiting single failure (or operator error) would be the failure of a RB-WW vacuum breaker. The results of the analysis indicate that the maximum negative pressure differential will be less than 2.0 psid and within the design values as stated in Section 6.2.1.1.2(c).

Multiple valve failure is not considered or expected. The analysis considers two WW-DW vacuum breakers initially out of service, in addition to the single failure of the RB-WW vacuum breaker, to preclude unnecessary shutdowns due to failure of the testing mechanism or position indication. Failure of the testing mechanism is considered more probable than failure of the vacuum breakers to open. It should also be noted that a single failure of a RB-WW vacuum breaker is more limiting than the single failure of a DW-WW vacuum breaker.

6.2.1.1.5 Suppression Pool Bypass Effects

6.2.1.1.5.1 Protection Against Bypass Paths. The pressure boundary between drywell and suppression chamber including the vent pipes, vent header, and downcomers is fabricated, erected, and inspected by nondestructive examination methods in accordance with the applicable ASME Codes. The design pressure differential for this boundary is 25 psid, which is substantially greater than conditions during a DBA. Actual peak accident differential pressure across this boundary is provided in Table 6.2-5.

Penetrations of this boundary except the vacuum breaker seats and vacuum breaker to downcomer flange are welded. The penetrations can be visually inspected.

Potential bypass leakage paths (such as the purge and vent system) have been considered. Each path has at least two isolation valves in the leakage path during normal system lineup. These valves are leaktight containment isolation valves which are all normally closed.

6.2.1.1.5.2 Reactor Blowdown Conditions and Operator Response. In the unlikely event of a primary system leak in the drywell accompanied by a simultaneous open bypass path between the drywell and suppression chamber, several postulated conditions may occur. For a given primary system break area, the maximum allowable leakage capacity can be determined when the containment pressure reaches the accident pressure at the end of reactor blowdown. The most limiting conditions would occur for those primary system break sizes which do not cause rapid reactor depressurization but rather have long leakage duration. These break sizes which are less than 0.4 ft^2 require operator action to terminate the reactor blowdown if there is a bypass path.

There would also be an increase in drywell pressure which leads to drywell venting to the wetwell by means of the downcomers. Both noncondensables and vapor are vented. If no bypass leakage exists, the maximum suppression chamber pressure would be 28 psig, the pressure resulting from displacing all containment noncondensables into the suppression chamber.

Operator action is required to mitigate the consequences of any bypass leakage. Emergency Operating procedures direct initiation of suppression chamber sprays at a chamber pressure

less than the value analyzed in Section 6.2.1.1.5.4. Drywell sprays are initiated if the chamber pressure limit is exceeded.

Class 1E indication is available in the control room allowing the operator to track chamber pressure. Additionally, a two-division system of alarms is provided to alert the operator if the suppression chamber spray initiation value is reached.

6.2.1.1.5.3 Analytical Assumptions. When calculating the allowable leakage capacities for a spectrum of break sizes, the following assumptions are made:

a. Flow through the postulated leakage path is pure steam. For a given leakage path, if the leakage flow consists of a mixture of liquid and vapor, the total leakage mass flow rate is higher but the steam flow rate is less than for the case of pure steam leakage. Since only the steam entering the suppression chamber free space results in the additional containment pressurization, this is a conservative assumption; and

b. There is no condensation of the leakage flow on either the suppression pool surface or the containment and vent system structures. Since condensation acts to reduce the suppression chamber pressure, this is a conservative assumption. For an actual containment there will be condensation, especially for the larger primary system break where vigorous agitation at the pool surface will occur during blowdown.

6.2.1.1.5.4 Analytical Results. The containment has been analyzed to determine the allowable leakage between the drywell and suppression chamber. Figure 6.2-20 shows the allowable leakage capacity $\left(A/\sqrt{K}\right)$ as a function of primary system break area. The area of the leakage flow path is A, and K is the total geometric loss coefficient associated with the leakage flow path.

Figure 6.2-20 is a composite of two curves. If the break area is greater than approximately 0.4 ft^2, natural reactor depressurization will rapidly terminate the transient. For break areas less than 0.4 ft^2, however, continued reactor blowdown limits the allowable leakage to small values.

Burns and Roe, Inc., confirmed the results of the above analysis by GE in Reference 6.2-7. Further evaluation assigned the maximum allowable leakage capacity at $A/\sqrt{K} = 0.050$ ft^2. Since a typical geometric loss factor would be three or greater, the maximum allowable flow path would be about 0.1 ft^2. This corresponds to a 4-in. line size.

A transient analysis using the CONTEMPT-LT (Reference 6.2-8) computer code was performed. The code was modified to include the mass and energy transfer to the suppression

pool from relief valve discharge. The limiting case was a very small reactor system break which would not automatically result in reactor depressurization. For this limiting case, it was assumed that the response of the plant operators was to initiate the drywell sprays when the suppression chamber pressure exceeds 30 psig, and then to proceed to cool the reactor down in an orderly manner of 100°F/hr cool down rate. Heat sinks considered were items such as major support steel inside containment, the reactor pedestal, the diaphragm floor and support columns, and the steel and concrete of the primary containment. Based on this analysis, the allowable bypass leakage used was 0.050 ft^2. The drywell pressure transient is shown in Figure 6.2-21 along with the corresponding curves of wetwell pressure, wetwell temperature, and suppression pool temperature for the original rated power condition.

The mandated allowable bypass leakage of 0.050 ft^2 is above the Technical Specifications containment bypass leakage limits. Periodic testing is performed to confirm that the containment bypass leakage does not exceed $(A/\sqrt{K}) = 0.0045$ ft^2. Figure 6.2-22 presents the resulting containment transient of 0.0045 ft^2. The peak containment pressure shown in Figure 6.2-22 is well below the containment design pressure.

An evaluation of this scenario with power uprate indicates that the time available for the operator to manually activate the containment spray is not significantly affected by power uprate. Therefore the effect of power uprate on the steam bypass event is determined to be insignificant.

6.2.1.1.6 Suppression Pool Dynamic Loads

A generic discussion of the suppression pool dynamic loads and asymmetric loading conditions is given in Mark II Dynamic Forcing Function Information Report, Reference 6.2-4. A unique plant assessment of these dynamic loads is made in Reference 6.2-5.

The impact of power uprate on the suppression pool dynamic loads defined in Reference 6.2-5 was evaluated for a power uprate to 102% of 110% of the original rated power (3323 MWt) and considering operation with extended load line limit analysis (ELLLA) and SRV out-of-service plus a setpoint tolerance increase to 3%. This evaluation confirmed that there are sufficient conservatism in the suppression pool dynamic loads defined in Reference 6.2-5.

6.2.1.1.7 Asymmetric Loading Conditions

See Section 6.2.1.1.6.

6.2.1.1.8 Primary Containment Environmental Control

6.2.1.1.8.1 Temperature, Humidity, and Pressure Control During Reactor Operation. The drywell is maintained at its normal operating temperature 135°F maximum average/150°F maximum by the use of three lower containment coolers and two upper containment coolers

mounted in the drywell area. The cooling coils for these units are supplied with water at 95°F, or less, from the reactor building closed cooling water system. There is no air cooling equipment in the wetwell since there is no heat producing equipment and the air space is normally less than 95°F. However, leakage past the seating surfaces of MSRVs may cause the wetwell air space temperature to increase due to heat transfer from the MSRV tailpipes to the wetwell atmosphere. In this case, the wetwell air space can be periodically cooled by spraying with RHR to maintain wetwell air space temperatures at or below 117°F, the limit for equipment qualification.

The unit coolers are sufficient to control the temperature and humidity from all expected heat sources and leaks during normal reactor operation. The containment purge system is not used to control containment temperature or humidity during reactor operation.

To relieve pressure during reactor operation, the operator can establish a flow path from the drywell to the standby gas treatment (SGT) system through the drywell purge exhaust line. After the first 24 hr of venting, and assuming the containment atmosphere does not contain unacceptable levels of radioactivity, venting can be valved to the reactor building exhaust system. By opening the 2-in. bypass valves around the purge exhaust valves rather than the purge exhaust valve, flow can be limited to 170 scfm. This flow is adequate for a drywell atmosphere temperature rise from 70°F to 150°F in 3 hr while maintaining the primary containment at no greater than 0.5 psi above the reactor building pressure. The 2-in. bypass valves would limit the radioactivity released prior to valve closure to a very small amount in the unlikely event a LOCA occurs with the vent path open. If necessary, the wetwell can be vented in a similar way to relieve pressure.

The RB-WW and WW-DW vacuum breakers operate automatically to control containment vacuum.

6.2.1.1.8.2 Primary Containment Purging. The primary containment is provided with a purge system to reduce residual contamination and deinert the containment prior to personnel access. This system is designed to produce a purge rate equivalent to three air changes per hour to the net free volume.

The drywell is purged of nitrogen for the scheduled refueling shutdown period and as required for inspection or maintenance. The maximum drywell purge rate is 10,500 cfm. For the first 24 hr of a drywell purge, or if residual airborne contamination is higher than allowable limits for direct release to the atmosphere, the purge is routed through the SGT system. Purge air is taken from the reactor building ventilation supply duct through two 30-in. normally closed isolation valves into the primary containment. The purged nitrogen is extracted from the drywell through two 30-in. normally closed isolation valves and is routed to one of two systems. The discharge can be routed through a normally closed isolation valve to the reactor building exhaust air plenum or to the SGT system. If a high airborne activity occurs,

the radiation monitors at the exhaust air plenum would cause the reactor building ventilation and primary containment purge systems to isolate.

Provision is also made to purge the nitrogen from the suppression chamber section of the primary containment. Purge air is taken from the reactor building supply duct through two 24-in. normally closed isolation valves into the suppression chamber. The nitrogen is extracted from the suppression chamber through two 24-in. normally closed isolation valves and routed to the exhaust air plenum or SGT system in the same manner as the drywell purge exhaust.

The systems are designed to purge either the drywell or the suppression chamber or the two chambers in series or in parallel. To protect the pressure suppression function of the suppression pool, only one vent line and one purge line will be open at any one time during reactor operation.

Purge system operation during reactor operation including startup, hot standby, and hot shutdown will be limited to inerting (through the purge system), deinerting, and pressure control. The containment purge system will not be used for temperature or humidity control during reactor operation.

All containment purge valves, including the 2-in. bypass valves, are designed to shut within 4 sec of receipt of a containment isolation signal and to shut against full containment design pressure. The containment isolation signals and the purge valves are part of the containment isolation system which is an ESF system. Each purge line has two isolation valves. These valves are opened by allowing compressed air to oppose a spring in the valve actuator. The valve is shut on a loss of compressed air, loss of electrical signal, or on a containment isolation signal. If the purge system is operating at the time of a LOCA, the system will automatically be secured. The level of the activity released through the purge system before isolation would be limited to the activity present in the coolant prior to the accident since the purge system will be isolated before any postulated fuel failure could occur. Dual isolation valves are also provided on the nitrogen inerting makeup piping connecting to the purge piping downstream of the 30-in. and 24-in. isolation valves. The nitrogen inerting system permits up to 75 cfh of nitrogen to be added to the containment during reactor operation to compensate for the postulated leakage listed in Table 6.2-1.

The 2-in. bypass valves, used for pressure control during operations, are located in parallel with each purge system exhaust valve. These 2-in. 150# globe valves meet the design requirements of the containment isolation system. They are designed to the same pressure/temperature ratings of the containment and purge valves and are designed to close within 4 sec against the containment design pressure. All four bypass valves can be remotely operated from the control room; are designed to close on F, A, and Z isolation signals; and are operationally qualified against applicable seismic and hydrodynamic loads.

6.2.1.1.8.3 Post-LOCA. The unit coolers are not required after a LOCA since heat removal is then accomplished by the containment cooling system, a subsystem of the RHR system. The Emergency Operating Procedures stipulate that nitrogen inerting is used as long as nitrogen is available. The operation of purge and vent transitions from oxygen control to hydrogen control upon loss of the ability to continue to inert with oxygen levels increasing. The containment purge system has the capability for a controlled purge of the containment atmosphere to aid in atmospheric control, if necessary, in accordance with the guidance provided in the Emergency Operating Procedures.

Any equipment located inside the primary containment which is required to operate subsequent to a LOCA has been designed to operate in the worst anticipated accident environment for the required period of time.

6.2.1.1.9 Postaccident Monitoring

A description of the postaccident monitoring systems is provided in Section 7.5.

6.2.1.2 Containment Subcompartments

The subcompartments in the primary containment analyzed to determine the effects of subcompartment pressurization are the annulus between the sacrificial shield wall and vessel annulus pressurization and the drywell head. For the power uprate and MELLLA evaluation, the limiting breaks in these two regions were analyzed considering reactor operation throughout the power flow map with power uprate, including final feedwater temperature reduction and single loop operation.

Peak subcompartment pressures occur very quickly (during the first few seconds) during the limiting subcompartment pressurization events. Therefore, the pressurization is controlled by the initial break flow rates which are governed by the break size and location and the initial reactor thermal-hydraulic conditions, such as reactor pressure and enthalpy. The limiting operating condition with power uprate with respect to subcompartment pressurization was determined to occur at 3702 MWt, 102% of design power limit 3629 MWt; therefore, the controlling parameters with power uprate were compared to the original values at this condition. The comparison shows that there are negligible differences between the controlling parameters for the original conditions used as the basis for the annulus pressurization and drywell head pressurization analyses and the corresponding parameters with power uprate and MELLLA (Reference 6.2-32 and 3.6-24). Therefore, the basis for the subcompartment pressurization loads is not affected by power uprate.

	Original Conditions (at 3463 MWt)	Power Uprate Conditions (at 3702 MWt)
Vessel dome pressure (psia)	1055	1055
Core inlet enthalpy (Btu/lbm)	532	532
Recirculation line break critical mass flux (lbm/ft^2-sec)	8900	8900
Feedwater enthalpy (Btu/lbm)	403	406
Feedwater line break critical mass flux (lbm/ft^2-sec)	19,300	19,200

The two areas within the primary containment considered to be subcompartments are the area within the sacrificial shield wall and the area above the refueling bulkhead plate at el. 583 ft.

Potential pipe breaks within the sacrificial shield wall have been evaluated. The information is contained in References 3.8-5, 3.8-6, 3.8-7, and 3.8-23.

Two analyses were performed based on original rated power (3323 MWt) to ensure the adequacy of the refueling bulkhead and inner refueling bellows at el. 583 ft. The first analysis, a break of the RCIC head spray line, determines the maximum downward loading due to pipe breaks. The second analysis, a break of the RRC suction line, determines the maximum upward loading.

Subcompartment analyses for a postulated high-energy pipe break in the primary containment were performed for the annulus inside the sacrificial shield wall, and the regions above and below the bulkhead plate which divides the drywell into the upper head region and the lower region.

The analyses for the annulus were reported in References 6.2-9 through 6.2-11 and 6.2-42. The result of the case of a 60-node model of the shield wall annulus for pressure transient calculation was confirmed by the NRC, and the analysis was considered acceptable for the shield wall base design and the design of the shield wall above the base, as stated in NRC letters (References 6.2-12 and 6.2-13). For the MELLLA evaluation a 400-node model of the shield wall was analyzed and the results were bounded by the original 60-node model. (Reference 3.6-24).

Peak and transient loading used to establish the adequacy of the sacrificial shield wall, including the time/space dependent forcing functions, are presented in References 6.2-9 through 6.2-11 and 6.2-34.

These loads were used to produce response spectra for use in evaluating secondary effects such as the dynamic effects on piping systems, equipment, and components attached to the sacrificial shield wall of the RPV. The following changes were made in the original assumptions used in the sacrificial shield wall analysis:

a. The volume in the annulus was utilized to receive the blowdown, with the RPV installation volume conservatively assumed not to be available;

b. A finite time-dependent blowdown was used for the recirculation break utilizing NSSS supplier methodology (Reference 6.2-22). The effect of subcooling was taken into account; and

c. The feedwater pressurization analysis was developed utilizing blowdown values developed by computer analysis.

Annulus pressurization calculations are briefly summarized as follows:

a. Annular volume

The annular volume excluded RPV insulation volume which is conservatively assumed not to be available. This approach is conservative and more realistic than other analyses where only the annular volume on one side of the RPV insulation was available;

b. Finite time dependent blowdown

The blowdown loading values in Reference 6.2-11 were derived with the assumption that the pipe break would occur instantaneously and that the annulus area would see the maximum blowdown at the same time. In actuality, the full flow from the severed pipe ends separate at a distance equal to one-half the pipe diameter. Movement occurs in a finite time and is a function of the stiffness characteristics of the pipe and the restraining capability of the pipe whip restraints.

Displacement versus time data for a finite break opening was developed and a GE analytical method was used for determining the short-term mass and energy release (Reference 6.2-22). The analysis was used for the recirculation loop break but not for the feedwater line since it was determined that the small percentage reduction for the feedwater would not warrant the additional calculations; and

c. Feedwater break blowdown data

The blowdown analysis for the postulated feedwater line break was based on a comprehensive model developed for the entire feedwater system from the condenser to the reactor vessel. This model, in conjunction with the RELAP4/MOD5 computer program (Reference 6.2-14), was used to calculate the transient and energy blowdown data.

Information pertaining to the analyses for the upper head and lower regions is as follows:

a. For the subcompartment analysis in the upper head region, the worst case is a double-ended guillotine break in the 6-in. RCIC line above the RPV head at approximately el. 595 ft. For the analysis in the lower region, the worst case is a double-ended guillotine break in the 24-in. recirculation line anywhere inside the drywell. The pipe breaks were postulated for the subcompartment structural and component support designs;

b. The blowdown mass and energy release rates as functions of time for the 6-in. RCIC line break are shown in Tables 6.2-20 and 6.2-21. The blowdown mass and energy release rates as functions of time for the 24-in. recirculation line break are shown in Tables 6.2-22 and 6.2-23;

c. The subcompartment analyses for the case of a 6-in. RCIC line break in the upper head region and the case of a 24-in. recirculation line break were performed with the Computer Code RELAP4/MOD5 (Reference 6.2-14).

Figure 6.2-23 shows the nodalization scheme in the drywell. Figure 6.2-24 depicts the plane view of vents in the bulkhead plate and shows the sectional views and dimensions of the bulkhead vents;

d. The nodal volume data used for the analysis of a 6-in. RCIC line break in the upper head region and the analysis of a 24-in. recirculation line break in the lower region is shown in Table 6.2-24. Table 6.2-25 shows the flow path data for the analysis of a 6-in. RCIC line break and Table 6.2-26 shows the flow path data for the analysis of a 24-in. recirculation line break;

e. Since there are no significant obstructions in the proximity of the pipe break considered in the analysis, significant pressure variation in any direction is not expected. The two-node model used for the analyses is considered to be adequate and a sensitivity study is not necessary;

f. There are no movable obstructions in the vicinity of the vents. Insulation for piping and components was assumed to remain intact during the accident, and volume of insulation was subtracted from the nodal volumes;

g. The absolute pressure responses as a function of time in the upper head region and the lower region in the drywell are shown in Figure 6.2-25 for the case of a 6-in. RCIC line break and in Figure 6.2-26 for the case of a 24-in. recirculation line break. Figures 6.2-27 and 6.2-28 represent the pressure differential across the bulkhead plate for the cases of a 6-in. RCIC line break and a 24-in. recirculation line break;

h. The peak differential pressure and the time of the peak for the cases of a 6-in. RCIC line break and a 24-in. recirculation line break are shown in Table 6.2-27; and

i. Peak and transient loading used to establish the adequacy of the sacrificial shield wall, including the time/space-dependent forcing functions are contained in References 6.2-9 through 6.2-11 and 3.8-23.

Peak and transient loading in other major compartments such as the drywell and the upper head region of primary containment were included in the basic design. Since these compartments are large and relatively unencumbered, the loads are time-dependent but relatively uniform throughout. The time-dependent loads were applied as equivalent static loads, utilizing the appropriate dynamic loads factors. Following a LOCA, the refueling bulkhead would require requalification prior to use. This is acceptable because the refueling bulkhead does not perform a safety-related function and would not become a missile during the postulated LOCA.

The analyses for the annulus are contained in References 6.2-9 through 6.2-11. Evaluation of potential pipe breaks within the sacrificial shield wall are in Reference 3.8-5, 3.8-6, 3.8-7, and 3.8-23.

6.2.1.3 Mass and Energy Release Analyses for Postulated Loss-of-Coolant Accidents

Where the ECCS enter into the determination of energy released to the containment, the single failure criterion has been applied to maximize the energy release to the containment following a LOCA.

6.2.1.3.1 Mass and Energy Release Data

Table 6.2-9 provides the mass and enthalpy release data for the recirculation line break. Blowdown flow rates do not change significantly during the 24-hr period following the

accident. Figures 6.2-29 and 6.2-30 show the blowdown flow rates for the recirculation line break. This data was employed in the DBA containment pressure-temperature transient analyses.

Table 6.2-10 provides the mass and enthalpy release data for the main steam line break. Blowdown flow rates do not change significantly during the 24-hr period following the accident. Figure 6.2-31 shows the vessel blowdown flow rates for the main steam line break as a function of time after the postulated rupture. This information has been employed in the containment response analyses.

6.2.1.3.2 Energy Sources

The reactor coolant system conditions prior to the line break are presented in Tables 6.2-3 and 6.2-4. Reactor blowdown calculations for containment response analyses are based on those conditions during a LOCA.

The energy released to the containment during a LOCA is comprised of the following:

a. Stored energy in the reactor system,
b. Energy generated by fission product decay,
c. Energy from fuel relaxation,
d. Sensible energy stored in the reactor structures,
e. Energy being added by the ECCS pumps, and
f. Metal-water reaction energy.

All but the pump heat energy addition is discussed or referenced in this section. The pump heat rate was used in evaluating the containment response to the LOCA and is conservatively selected as a constant input of 4890 Btu/sec to the system. The pump heat rate is added to the decay heat rate for inclusion in the analysis.

Following each postulated accident event, the stored energy in the reactor system and the energy generated by fission product decay will be released. The rate of release of core decay heat for the evaluation of the containment response to a LOCA is provided in Table 6.2-11 as a function of time after accident initiation.

Following a LOCA, the sensible energy stored in the reactor primary system metal will be transferred to the recirculating ECCS water and will, thus, contribute to the suppression pool and containment heatup.

6.2.1.3.3 Reactor Blowdown and Core Reflood Model Description

The reactor primary system blowdown flow and core reflood rates were evaluated with the model described in References 6.2-1 and 6.2-2.

6.2.1.3.4 Effects of Metal-Water Reaction

The containment systems are designed to accommodate the effects of metal-water reactions and other chemical reactions which may occur following a LOCA. The amount of metal-water reaction which can be accommodated is consistent with the performance objectives of the ECCS. Section 6.2.5 provides a discussion on the generation of metal-water hydrogen within the containment.

6.2.1.3.5 Thermal Hydraulic Data for Reactor Analysis

Sufficient data to perform confirming thermodynamic evaluations of the containment has been provided within Section 6.2.1.1.3.3.

6.2.1.3.6 Long Term Cooling Model Description

The long term cooling model is described in Section 6.2.1.1.3.4.

6.2.1.3.7 Single Failure Analysis

Containment analysis results assuming the worst single active failure are presented in Section 6.2.1.

6.2.1.4 Not applicable to BWR plants.

6.2.1.5 Not applicable to BWR plants.

6.2.1.6 Testing and Inspection

6.2.1.6.1 Structural Integrity Test

The test for structural integrity is discussed in Section 3.8.

6.2.1.6.2 Integrated Leak Rate Test

Leak rate tests are conducted to verify that leakage out of the primary containment does not exceed 0.375% per day at 38 psig. This test is discussed in Section 6.2.6.

6.2.1.6.3 Drywell Bypass Leak Test

Tests are conducted, in accordance with the Technical Specifications, to verify that the drywell-wetwell bypass leakage does not exceed an equivalent leakage of $A/\sqrt{K}$ equal to 0.0045 ft^2. This is less than the bypass leakage allowed.

6.2.1.6.4 Vacuum Relief Testing

Tests are conducted in accordance with the Technical Specifications to verify the proper operation of the vacuum relief valves.

6.2.1.7 Required Instrumentation

The instrumentation required to monitor containment parameters and to initiate safety functions is discussed in Chapter 7.

6.2.2 RESIDUAL HEAT REMOVAL CONTAINMENT HEAT REMOVAL SYSTEM

6.2.2.1 Design Bases

The RHR containment heat removal function is accomplished by the use of an operational mode of the RHR system. The purpose of this system is to prevent excessive containment temperatures and pressures, thus maintaining containment integrity following a LOCA. To fulfill this purpose, the RHR containment cooling system meets the following safety design bases:

a. The system will limit the long term bulk temperature of the suppression pool to ≤204.5°F when considering the energy additions to the containment following a LOCA. These energy additions, as a function of time, are provided in Section 6.2.1;

b. The single failure criterion applies to the system;

c. The system is designed to safety grade requirements including the capability to perform its function following an SSE;

d. The system will remain operational during those environmental conditions imposed by a LOCA;

e. Each active component of the system is testable during normal operation of the nuclear power plant;

f. Minimum net positive suction head (NPSH) is maintained on the RHR pumps even with the containment at atmospheric pressure, the suppression pool at a maximum temperature, and postaccident debris entrained on the beds of the suction strainers; and

g. Withstands dynamic effect of pipe breaks inside and outside of containment (see Section 3.6).

The primary containment unit coolers provide for containment heat removal during nonaccident conditions. These coolers are not an ESF and no credit is taken for them during accident events.

6.2.2.2 Residual Heat Removal Containment Cooling System Design

The RHR containment cooling system is an integral part of the RHR system. Water is drawn from the suppression pool, pumped through one or both RHR heat exchangers and delivered to the vessel, the suppression pool, the drywell spray header, or the suppression pool vapor space spray header.

Water from the SW system is pumped through the heat exchanger tube side to remove heat from the process water. Two cooling loops are provided, each mechanically and electrically separate from the other to achieve redundancy. The process diagram including the process data from all design operating modes and conditions is provided in Section 5.4.

All portions of the RHR containment cooling system are designed to withstand operating loads and loads resulting from natural phenomena.

Construction codes and standards are covered in Section 3.2. Seismic and environmental qualifications are discussed in Section 3.10 and 3.11, respectively.

There are no signals which automatically initiate containment cooling; however, the SW system is automatically initiated by the same signals which start up the ECCS. The capacity of power sources, including the standby diesels, is sufficient to allow operation of the SW pumps simultaneously with the ECCS pumps. An ECCS pump need not be secured prior to starting RHR containment cooling.

To start RHR containment cooling after a LOCA resulting from a large break, the operator needs only to verify that the normally open RHR heat exchanger isolation valves are open and then shut the heat exchanger bypass valve. The rated containment cooling flow, 7450 gpm, can be achieved through the LPCI line, the drywell spray line, or through the test line and wetwell spray line, which directs the heat exchanger discharge directly into the suppression pool. Thus, the design allows containment cooling simultaneously with core flooding or containment spray. If the break size is small enough to limit reactor depressurization, the rated containment cooling flow cannot be established through the LPCI line. The operator must then direct the RHR containment cooling flow through the drywell spray line or through the test line; however, the operator must not divert LPCI flow away from the reactor until adequate core cooling is ensured. In addition, an electrical interlock prevents actuation of a drywell spray loop until the corresponding LPCI injection valve has been shut. A second electrical

interlock prevents actuation of drywell spray if there is no high drywell pressure signal present.

When allowed, the operator may start drywell spray by shutting the LPCI injection valve and then opening the drywell spray valves. Similarly, the operator may divert the flow directly to the suppression pool by shutting the LPCI injection valve and then opening the test line valve.

Preoperational tests were performed to verify individual component operation, individual logic element operation, and system operation up to the drywell spray spargers. A sample of the sparger nozzles were bench tested for flow rate versus pressure drop to evaluate the original hydraulic calculations. The spargers were tested by air and visually inspected to verify that all nozzles were clear.

6.2.2.3 Design Evaluation of the Containment Cooling System

The containment spray system is discussed in Section 5.4.7. Containment spray is not required for heat removal.

In the event of the postulated design basis LOCA, the short-term energy release from the reactor primary system will be dumped to the suppression pool. This will cause a pool temperature rise of approximately 56°F in the short term. Subsequent to the accident, fission product decay heat will result in a continuing energy input to the pool. The RHR containment cooling system will remove this energy which is input to the primary containment system, thus resulting in acceptable suppression pool temperatures and containment pressures.

To evaluate the adequacy of the containment cooling system, the following sequence of events is assumed to occur.

a. With the reactor initially at the reactor power level specified in Table 6.2-4, a LOCA occurs;

b. A loss of offsite power occurs and either Division 1 or 2 diesel fails to start and remains out of service during the entire transient. This is the worst single failure;

c. Only three ECCS pumps are activated and operated as a result of there being no offsite power and minimum onsite power; and

d. After 10 minutes it is assumed that the plant operators shut the bypass valve on one RHR heat exchanger to start containment heat removal. Once containment cooling has been established, no further operator actions are required.

Each RHR pump suppression pool suction consists of a pipe "T" with a suction strainer at each end. During normal operation, some fiber and corrosion products have accumulated on the strainers. This accumulation is considered in the design of the strainers, which will entrain additional debris following a LOCA. The potential for the additional accumulation of debris during a LOCA is discussed in Section 6.2.1. Wetwell strainers are periodically cleaned to ensure that post-LOCA accumulation of debris on the strainer beds is within acceptable limits.

The relative locations of the RHR suction and return lines in the suppression pool are shown in Figure 6.2-32. Mixing in the pool is primarily accomplished by the vertical and horizontal displacement between the suction and discharge line for a loop. The structures in the suppression pool act as baffles and improve mixing. Vertical thermal stratification in the suppression pool is prevented by locating the discharge lines above the suction lines.

Required operator actions are minimal. Even without operator action, some heat removal will occur from the suppression pool to the spray ponds. The ECCS initiation signals start up both SW and LPCI flow. The LPCI flow is primarily through the RHR heat exchanger bypass line since the bypass valve is signaled to open. Since the heat exchanger isolation valves are normally open, some of the LPCI flow (approximately 40%) will flow through the heat exchanger. It is estimated that for break sizes resulting in RPV depressurization and rated LPCI flow, the heat exchangers' duty with the partial shell side flow (i.e., no operator action) will be approximately 75% of the heat exchangers' duty with full shell side flow. Thus it is estimated that operator delays after a large break would result in only a moderate increase in suppression pool temperatures.

Summary of Containment Cooling Analysis

When calculating the long-term, post-LOCA pool temperature transient, it is assumed that the initial suppression pool temperature is at its maximum value and that the SW temperature is as described in Table 6.2-4 throughout the accident period. These assumptions conservatively bound the heat sink temperature to which the containment heat is rejected. In addition, the RHR heat exchanger is assumed to be in a fully fouled condition at the time the accident occurs. This conservatively minimizes the heat exchanger heat removal capacity. The resultant suppression pool temperature transient is described in Section 6.2.1 and is shown in Figure 6.2-12. Even with the degraded conditions outlined above, the maximum uprate temperature is 204.5°F, which is less than the original 220°F. The results of the containment analysis performed to evaluate reduced ECCS flow rates (RHR/LPCI and LPCS) are bounded by the power uprate analysis.

When evaluating this long-term suppression pool transient, all heat sources in the containment are considered with no credit taken for any heat losses other than through the RHR heat exchanger. These heat sources are discussed in Section 6.2.1. Figure 6.2-13 shows the actual heat removal rate of the RHR heat exchanger.

GE SC 06-01 addresses the unlikely event of an inoperable RHR heat exchanger with all ECCS pumps running post-accident. This event was evaluated in Reference 6.2-42 and found that if all four low pressure pumps (LPCS, 3-LPCI) were injecting post-accident the suppression pool bounding temperature may be exceeded. The timing for this action is detailed in Reference 6.2-42. In the event of an inoperable RHR heat exchanger, operating procedures ensure that the three low pressure pumps not providing operational heat exchanger flow will be secured before suppression pool temperature limits are exceeded.

It can be concluded that the conservative evaluation demonstrates that the RHR system in the suppression pool cooling mode limits the post-DBA containment temperature transient.

6.2.2.4 Tests and Inspections

The preoperational test program of the containment cooling system is described in Sections 14.2.12 and 5.4.7. Operational testing is in accordance with the Technical Specifications.

6.2.2.5 Instrumentation Requirements

The details of the instrumentation are provided in Chapter 7. The containment cooling mode of the RHR system is manually initiated from the control room.

6.2.3 SECONDARY CONTAINMENT FUNCTIONAL DESIGN

The secondary containment system includes the secondary containment structure and the safety-related systems provided to control the ventilation and cleanup of potentially contaminated volumes of the secondary containment structure following a DBA. This section discusses the secondary containment design. The SGT system is used to depressurize and clean the secondary containment atmosphere and is discussed in Section 6.5.1.

The secondary containment structure is synonymous with the reactor building. Sufficient openings exist among all areas of the reactor building to ensure that no significant long-term pressure gradients can exist within the secondary containment. In addition, with the exception of the steam tunnel, there are sufficient vent areas in all confined or enclosed spaces such that pressure can be safely relieved into the rest of secondary containment for all postulated pipe breaks within those spaces.

The steam tunnel runs through the reactor building and into the turbine generator building. The portion of the steam tunnel within the reactor building is physically and functionally part of the secondary containment during normal operation, expected transients, and all postulated accident events except for a pipe break within the steam tunnel. The steam tunnel relieves pressure through blowout panels which normally separate the turbine generator and reactor building portions of the steam tunnel.

6.2.3.1 Design Bases

The secondary containment structure completely encloses the primary containment. The secondary containment provides an additional barrier to fission product release when primary containment is operable.

The secondary containment structure, in conjunction with other secondary containment systems, provides the means of controlling and minimizing leakage from the primary containment to the outside atmosphere during a LOCA.

The reactor building pressure control system operates together with the reactor building ventilation system during normal operation to maintain building pressure greater than or equal to 0.25 in. of vacuum water gauge as indicated at the reactor building el. 572 ft. During emergency operation the pressure control system operates together with the SGT system to maintain a vacuum in secondary containment at greater than or equal to 0.25 in. vacuum water gauge on all building surfaces. This ensures that leakage is into the secondary containment during normal and emergency operation. Thus, all the reactor building air is either exhausted through the exhaust air plenum, where it is constantly monitored, or discharged through the filtration units of SGT system. The reactor building pressure control system and the reactor building ventilation system are described in Section 9.4.

The secondary containment isolation signals, secondary containment isolation valves, isolation valves for the reactor building ventilation system, SGT system, and reactor building pressure control system are all designed to Seismic Category I, Class 1E requirements. The design bases loads for the SGT system are given in Section 6.5.1. These systems can be periodically inspected and functionally tested.

The secondary containment structure houses the refueling and reactor servicing equipment, the new and spent fuel storage facilities, and other reactor auxiliary or service equipment, including all or part of the reactor core isolation cooling system, reactor water cleanup demineralizer system, standby liquid control system, control rod drive (CRD) system equipment, the ECCS, SGT system, and electrical equipment components. The secondary containment structure protects the equipment from Seismic Category I disturbances, the design basis tornado and tornado-generated missiles, and the design basis wind. The secondary containment structure is designed to meet the following design bases:

a. The reactor building is designed to meet Seismic Category I requirements;

b. The reactor building is designed and constructed in accordance with the structural design criteria presented in Section 3.8, and provides for low inleakage and outleakage during reactor operation. The building is designed to limit the inleakage rate to 100% of the reactor building free volume per day when maintained at a negative building pressure of 0.25 in. of water;

c. The reactor building is designed to withstand applied wind pressures resulting from the design basis wind velocity, including gusts of 100 mph at an elevation of 30 ft above grade. The pressure of the design basis wind velocity on the reactor building is discussed in Section 3.3;

d. The reactor building is designed to withstand pipe whip loads plus jet impingement of jet reaction loads due to high-energy pipe breaks outside primary containment;

e. The reactor building design allows for periodic inspections and functional tests of the penetrations, ventilation system (including automatic isolation), pressure control system, and SGT system;

f. The reactor building is designed to withstand applied wind pressures resulting from the design basis tornado. The effects of the design basis tornado pressures on the structure are discussed in Section 3.3 and tornado-generated missiles are discussed in Section 3.5; and

g. The reactor building is designed for all probable combinations of the design basis wind and the design basis tornado velocities and associated differences of pressure within the structure and atmospheric pressure outside the structure.

6.2.3.2 System Design

See Figures 1.2-7 through 1.2-12 for general arrangement drawings of the reactor building. Also see Figures 3.8-1 and 3.8-2. See Table 6.2-12 for the design and performance data for the secondary containment structure.

The major design provisions that prevent primary containment leakage from bypassing the SGT system, except for those lines identified as potential bypass leakage paths in Table 6.2-16, are the reactor building pressure control system, the reactor building ventilation isolation system, the isolation signals, and the standby power system.

Normal reactor building ventilation system is not required to operate during accident conditions. The system is automatically shut down and the SGT system started in the event of any of the following isolation signals:

a. Reactor vessel low-low water level,
b. High drywell pressure, and
c. High radiation level in the reactor building exhaust air plenum.

All ventilation system penetrations of secondary containment (except those of the SGT system) are fitted with two fail-closed, air-operated butterfly dampers in series. All dampers automatically close on any one of the isolation signals.

Penetrations of the secondary containment associated with the SGT system are fitted with two motor operated butterfly valves in series. The motor operated valves, which are powered

from the essential power buses, are opened automatically, and the SGT system is started by any of the signals which isolate the secondary containment.

Penetrations of the reactor building are designed with leakage characteristics consistent with leakage requirements of the entire building. Entrance to the reactor building is through interlocking double door personnel air locks. Entrance to the reactor building vehicle air lock (railroad bay) is through an interlocking air lock system.

The storage/receiving area for casks is the vehicle air lock (railroad bay). The vehicle air lock (railroad bay) is completely within and along the south side of the reactor building at el. 441 ft. One of the interlocked doors is the exterior vehicle door at the east end of the vehicle air lock, and the other interlocked door is the interior person door at the west end of the vehicle air lock. There are also two hatches that are interlocked with the vehicle air lock entrance doors.

All entrances to the reactor building are through interlocking double door air lock systems and, therefore, building ingress and egress do not jeopardize the integrity of the secondary containment. All openings such as personnel doors leading into the secondary containment are under administrative control and are provided with position indication and alarm in the main control room if they are not closed after the time allowed for ingress/egress. An exception is an access hatch which has been provided in one of the steam tunnel blowout panels. When not in use, the hatch is secured closed by security bolts and padlocks. Another exception is the CRD rebuild room drop chute which is used to dispose of contaminated CRD components. The drop chute penetrates the reactor building floor at el. 471 ft and becomes a part of secondary containment when the vehicle air lock (railroad bay) exterior doors are open. A valve at el. 501 ft allows CRD components (e.g., filters) to be dropped down the chute without breaching secondary containment.

The reactor building pressure control system is designed to mitigate fluctuations in reactor building pressure by such factors as wind gusts. Reactor building pressure is indicated and recorded in the main control room and loss of negative pressure is alarmed.

The reactor building pressure control system automatically maintains a subatmospheric pressure in the reactor building by monitoring the differential pressure between the reactor building interior and the external atmosphere. The differential pressure is monitored by eight differential pressure transmitters, four in each division, which measure the differential pressure between the internal reactor building and each of the four external sides of the reactor building. The signal which indicates the least differential pressure controls the position of the blades in the normal reactor building exhaust fan units. In the event of reactor building isolation, the reactor building pressure control system controls reactor building pressure by SGT system fan flow.

Piping that connects to primary containment and passes through secondary containment is not considered a potential secondary containment bypass leak path if isolated by blind flanges or a rupture disc.

Condensate from the condensate storage tanks can be used to flush ECCS and RHR shutdown cooling lines. Blind flanges are installed in the condensate system at spool piece COND-RSP-4 and in the RHR system downstream of RHR-V-108 and RHR-V-109 and at spool piece RHR-RSP-1 to isolate potential secondary containment bypass leak paths. The spool pieces are installed to comply with the piping support analyses. The spool pieces COND-RSP-1, COND-RSP-2, COND-RSP-3, COND-RSP-5, and COND-RSP-6 are connected to the condensate piping with blind flanges at the other end. If connected to the corresponding RHR lines, blind flanges would be necessary to isolate potential secondary containment bypass leak paths.

Table 6.2-16 presents a tabulation of primary containment process piping penetrations. The lines that penetrate both the primary and secondary containment were evaluated for potential bypass leakage paths as summarized in Table 6.2-16. The guidance of the NRC Branch Technical Position Containment Systems Branch (BTP CSB) 6-3 (Reference 6.2-40) were addressed in considering potential bypass leakage paths. Designs provided to prevent through-line leakage are dependent on whether the working fluid in the associated system is gaseous or liquid. Lines that vent (gaseous release) into the reactor building, will be treated by the SGT system. Lines that penetrate primary and secondary containment that normally contain water provide a water seal between the primary containment and the environment upon the primary isolation valve closure. If a break were to occur in the lines, the water or gas would evacuate into the reactor building, and any leakage through the failed line would be collected by the floor drain system or processed by the SGT system. Some lines that penetrate both the primary and secondary containment are seismically qualified outside of the secondary containment. These lines are considered closed systems and are not categorized as potential bypass paths. Lines that penetrate the primary and secondary containment are contained in one or more of the categories listed below.

a. Operate post-LOCA at pressure higher than the primary containment pressure or are seismically qualified.

b. Are vented to the secondary containment.

c. Are provided with water seal assessed against primary containment valve leakage characteristics.

Therefore, the primary containment isolation valve leak rate tests and SGT system operability tests are adequate to ensure that bypass leakage will not occur and separate leakage testing of the secondary containment isolation valves is not required. An additional conservative assumption of secondary containment bypass leakage of 0.04% volume per day, the secondary containment bypass limit, for the first 24 hr and 0.02% volume per day after 24 hr was included in dose consequence analyses in Chapter 15. The analyses demonstrated that the potential bypass leakage contribution from water lines to the dose consequences were negligible.

The design and construction codes, standards, and guides applied to the buildings and SSCs are discussed in Chapter 3.

6.2.3.3 Design Evaluation

The SGT system will maintain the secondary containment at a negative pressure with respect to the external environment following the design basis loss-of-coolant accident. The design flow rate of the exhaust system is based on the following criteria:

a. The rate of in-leakage assumption in based on the 100% of the secondary containment volume per day.

b. The exhaust flow rate is based on maintaining containment vacuum greater than or equal to 0.25 in. of vacuum water gauge.

The SGT system is described in Section 6.5.

6.2.3.3.1 Calculation Model

The parametric analysis of secondary containment responses following a LOCA were performed using the general purpose thermal-hydraulic computer program GOTHIC (Reference 6.2-39). The GOTHIC program solves conservation of mass, momentum, and energy equations for multi-component, multi-phase flows. The phase balance equations are coupled by mechanistic models for interface mass, momentum, and energy transfers that cover the entire flow regime as well as single-phase flows. Aspects of the reactor building taken into consideration for the model include:

a. Heat loads modeled in the respective rooms (multiple volumes),
b. Heat transfer for primary to secondary containment (negligible),
c. Heat transfer between secondary containment and the outside environment,
d. Heat transfer between rooms and reactor building floors (multiple elevations),
e. Room cooler efficiency, and
f. Secondary containment relative humidity.

6.2.3.3.2 Results

A series of parametric studies were performed to evaluate varying meteorological conditions and heat loads on the drawdown analyses. Representative temperature and pressure response curves are provided as Figures 6.2-34 and 6.2-35. These analyses are based on the following:

	PARAMETER	VALUE
a)	The reactor building was modeled using lumped parameter volumes totaling	Approximately 3,500,000 ft^3
b)	Exhaust rate during drawdown	4800 cfm
c)	Secondary containment in leakage rate	2430 cfm
d)	Initial reactor building temperature range	50°F to 75°F
e)	Outside temperature range	0°F to 94°F
f)	Wind speeds range	0 mph to 17 mph

The drawdown analyses for secondary containment determined that the SGT system can establish and maintain the secondary containment pressure at less than 0.25 inches of vacuum water gauge within 20 minutes.

6.2.3.4 Tests and Inspections.

Components of the SGT system are tested periodically to ensure operability. The capability of the SGT system to maintain the secondary containment operability is tested in accordance with Technical Specifications. Tests are performed by isolating the secondary containment and starting either of the two SGT units. Design pressure is maintained in the secondary containment by operation of one SGT unit for a period of 1 hr. During the test, flow measurements of the SGT system and differential pressure measurements of the secondary containment are taken. If during testing the SGT system fails to maintain the secondary containment pressure at 0.25 inches of water gauge or greater below atmospheric pressure at or below an SGT system air flow rate of 2240 cfm, the reactor building is visually inspected for leakage paths. Leakage paths are repaired permanently (no temporary sealing mechanisms such as tape are used), and the tests are repeated until the acceptance level is met.

Tests are limited to 1 hr because isolation of the secondary containment necessitates the shutdown of the normal reactor building ventilation system which is required for the operation of non-ESF equipment housed in the secondary containment.

6.2.3.5 Instrumentation Requirements

Secondary containment negative pressure is automatically maintained by the reactor building pressure control system. During normal operations, this system controls the position of the blades in the normal reactor building exhaust fan units. During accident conditions, the SGTS is started and the secondary containment is isolated by the primary containment and reactor vessel isolation control system. Under this condition, the system controls reactor building negative pressure by controlling the SGT system fans.

Descriptions of the instrumentation and controls for the reactor building pressure control system, primary containment and reactor vessel isolation control system, and SGT system are contained in Section 7.3.1. The analyses are described in Section 7.3.2.

6.2.4 CONTAINMENT ISOLATION SYSTEM

6.2.4.1 Design Bases

Safety Design Bases

The containment isolation provisions for the lines penetrating containment conform to the requirements of GDC 55, 56, or 57 as appropriate. As provided by GDC 55 and 56, there are containment penetrations whose isolation provisions do not have to satisfy the explicit requirements of the GDC but can be acceptable on some other defined basis.

Most of those penetrations not satisfying the explicit requirements of the GDC were found acceptable based on their meeting alternative criteria specified in Section 6.2.4, item II of the SRP.

Other lines penetrating the containment described in FSAR 6.2.4.3.2.1.1.1 do not meet either the explicit requirements of the GDC or the alternative SRP acceptance bases but meet acceptable isolation criteria on other defined acceptance bases.

a. Isolation valves provide for the necessary isolation of the containment in the event of accidents or other conditions when the unfiltered release of containment contents cannot be permitted,

b. Capability for rapid closure or isolation of all pipes or ducts that penetrate the containment is achieved by means that provide a containment barrier in such pipes or ducts sufficient to maintain leakage within permissible limits,

c. The design of isolation valving for lines penetrating the containment follows the requirements of General Design Criteria (GDC) 54 through 57 as noted in Table 6.2-16,

d. Isolation valving for instrument lines which penetrate the containment conforms to the requirements of Regulatory Guide 1.11, Revision 0,

e. Isolation valves, actuators, and controls are protected against loss of safety function by missiles,

f. The design of the containment isolation valves and associated piping and penetrations is to Seismic Category I requirements,

g. Containment isolation valves and associated piping and penetrations meet the requirements of the ASME Boiler and Pressure Vessel Code, Section III, Classes 1 or 2, as applicable, and

h. Containment isolation valve closure limits radiological effects from exceeding established requirements (10 CFR 50.67), including the effects of sudden isolation valve closure.

The primary objective of the containment isolation system is to provide protection against releases of radioactive materials to the environment as a result of accidents occurring to the nuclear boiler system, auxiliary systems, and support systems. This objective is accomplished by automatic isolation of appropriate lines that penetrate the containment system. Actuation of the containment isolation systems is automatically initiated at specific limits.

The containment isolation systems, in general, close those fluid lines penetrating containment that support systems not required for emergency operation. Those fluid lines penetrating containment which support ESF systems have remote manual isolation valves which may be closed from the control room.

Redundancy and physical separation are required in the electrical and mechanical design to ensure that no single failure in the containment isolation system prevents the system from performing its intended functions.

The isolation system is designed to Seismic Category I. Classification of equipment and systems is shown in Table 3.2-1.

Actuation of the containment isolation systems is initiated by the signals listed in Table 6.2-16.

The criteria for the design of the containment and reactor vessel isolation control system are listed in Section 7.3.1 and Table 7.3-5. The bases for assigning certain signals for containment isolation are contained in Section 7.3.1.

On signals of high drywell pressure or low-low water level in the reactor vessel, isolation valves that are part of systems not required for emergency shutdown of the plant are closed.

The same signals will initiate the operation of systems associated with the ECCS. The isolation valves which are part of the ECCS may be closed remote manually from the control room or can close automatically.

6.2.4.2 System Design

The general criteria governing the design of the containment isolation systems is provided in Sections 3.1.2 and 6.2.4.1. Table 6.2-16 summarizes the containment penetrations and contains information pertaining to:

a. Open or closed status under normal operating conditions and accident situations,
b. Primary and secondary modes of actuation provided for isolation valves,
c. Parameters sensed to initiate isolation valve closure,
d. Closure time for principal isolation valves to secure containment isolation, and
e. Applicable GDC.

Protection is provided for isolation valves, actuators, and controls against damage from missiles. All potential sources of missiles are evaluated. Where possible hazards exist, protection is afforded by separation, missile shields, or by location. See Section 3.5 for a discussion of evaluation techniques.

Isolation valves are designed to be operable under the most adverse environmental conditions (see Section 3.11) such as operation under maximum differential pressures, extreme seismic occurrences, steam laden atmosphere, high temperature, and high humidity. Electrical redundancy is provided for power-operated valves. Power for the actuation of two isolation valves in line (inside and outside of containment) is supplied by two redundant, independent power sources without cross ties. In general, outboard isolation valves receive power from a Division 1 power supply while isolation valves within containment receive power from a Division 2 power supply. In general, the supply is ac for Division 2 valves and dc for Division 1 valves depending on the system under consideration. The ability to provide appropriate containment integrity during a station blackout is discussed in Section 1.5.2.

The main steam line isolation valves are pneumatic spring-loaded, piston-operated globe valves designed to fail closed. The valves are held open by air pressure against spring force that will close or help close the valve in case of loss of power or air supply. Each main steam line isolation valve has an air accumulator to assist in its closure on loss of the air supply to the solenoid pilot valve. The separate and independent action of either air pressure or spring force will close the outboard MSIV. The inboard MSIV will close on air or springs and air.

Air-operated valves (not applicable to air-testable check valves) close on loss of air, except the butterfly valves on the RB-WW vacuum breaker lines.

The design of the isolation valve system includes consideration of the possible adverse effects of sudden isolation valve closure when the plant systems are functioning under normal operation.

6.2.4.3 Design Evaluation

6.2.4.3.1 Introduction

The main objective of the containment isolation system is to provide protection by preventing releases of radioactive materials to the environment. This is accomplished by complete isolation of system lines penetrating the primary containment. Redundancy is provided to satisfy the design requirement that any active failure of a single valve or component does not prevent containment isolation.

Mechanical components in process lines, such as isolation valve arrangements or extraordinary ex-containment system quality, are redundant and provide back-up in the event of accident conditions. Instrument lines, in many cases, rely on a single mechanical barrier in the event of accident conditions. These isolation valve arrangements satisfy the requirements specified in GDC 54, 55, 56, and 57, and Regulatory Guide 1.11, Revision 0.

The arrangements with appropriate instrumentation are described in Table 6.2-16 and Figures 6.2-36 through 6.2-59. The isolation valves have redundancy in the mode initiation. Generally, the primary mode is automatic and the secondary mode is remote manual. A program of testing, described in Section 6.2.4.4, is maintained to ensure valve operability and leaktightness.

The design specifications require each isolation valve to be operable under the most severe operating conditions. Each isolation valve is protected by separation and/or adequate barriers from the consequences of potential missiles.

Electrical redundancy is provided in isolation valve arrangements which eliminates dependency on one power source to attain isolation. Electrical cables for isolation valves in the same line have been routed separately.

Provisions are in place to control the position of nonpowered process line, vent, drain, and test connection valves that are containment isolation valves. These provisions meet the applicable requirements of GDC 55 and 56. For power-operated valves, the position is indicated in the main control room. Discussion of instrumentation and controls for the isolation valves is included in Chapter 7.

6.2.4.3.2 Evaluation Against General Design Criteria

6.2.4.3.2.1 Evaluation Against Criterion 55. The reactor coolant pressure boundary (RCPB) consists of the RPV, pressure retaining appurtenances attached to the vessel, and valves and pipes which extend from the RPV up to and including the outermost isolation valve. The lines of the RCPB which penetrate the containment include provisions for isolation of the containment, thereby precluding any significant release of radioactivity. Similarly, for lines which do not penetrate the containment but which form a portion of the RCPB, the design ensures that isolation of the reactor coolant pressure can be achieved.

6.2.4.3.2.1.1 Influent Lines. Influent lines which penetrate the primary containment and connect directly to the RCPB are equipped with at least two isolation valves, one inside the drywell and the other as close to the external side of the containment as practical.

Table 6.2-16 contains those influent pipes that comprise the RCPB and penetrate the containment.

6.2.4.3.2.1.1.1 Feedwater Lines. The feedwater lines are part of the RCPB as they penetrate the drywell to connect with the RPV. The isolation valve inside the drywell is a swing check valve, located as close as practicable to the containment wall. Outside the containment another swing check valve is located as close as practicable to the containment wall and farther away from the containment is a motor-operated gate valve. Should a break occur in the feedwater line, the check valves prevent significant loss of reactor coolant inventory and offer immediate isolation. During the postulated LOCA, it is desirable to maintain reactor coolant makeup from all sources of supply. For this reason, the outermost valve does not automatically isolate upon a signal from the protection system. Instead of using a leakage detection system in conjunction with use of a remote manual valve, this valve will be procedurally controlled and remotely closed from the control room to provide long-term leakage protection 20 minutes after a postulated LOCA. If information indicates a degraded core condition before 20 minutes, the operator will take action to close the feedwater block valve at this time.

The time required to close this valve is approximately the same as if a leakage detection system were employed.

The design allows the condensate and condensate booster pumps to supply feedwater to the vessel through a bypass line around the reactor feed pumps (which are tripped on a loss of steam supply) as soon as the vessel is partially depressurized. For this reason, the outermost gate valve does not automatically isolate upon signal from the protection system. The gate valve meets the same environmental and seismic qualifications as the outside check valve. The valve is capable of being remotely closed from the control room to provide long-term leakage protection in the event that feedwater makeup is unavailable or unnecessary. In the control

room, the operator can determine if makeup from the feedwater system is unavailable by the use of the feedwater flow indicator which will show high flow for a feedwater pipe break, or no flow for a feedwater pump trip.

The operator can also determine if makeup from the feedwater system is unnecessary by verifying that the ECCS is functioning properly and the reactor water level is being adequately maintained. The ECCS operation signals and reactor vessel water level indication are provided in the control room.

There is no need to specifically alert the operator to isolate the feedwater lines other than as described above since the lines both have check valves. However, for long-term isolation purposes, the operator may close the motor-operated gate valves at any time.

Emergency procedures require the operator to close reactor feedwater block valves within 20 minutes following cessation of feedwater flow. No credit is taken for feedwater flow in assessing core and containment response to a LOCA.

The applicable generic anticipated transients without scram (ATWS) studies (References 6.2-23 and 6.2-24) assumed the use of turbine driven feed pumps and simulated the loss of steam to the turbine and feedwater flow in the most limiting case in which all main steam lines were isolated. In the ATWS situation, the loss of feedwater flow (or limiting of the flow to near zero) causes a decrease in core flow and inlet subcooling which results in a power reduction. This leads to a benefit in mitigating the peak vessel pressure, containment pressure and suppression pool temperature.

6.2.4.3.2.1.1.2 High-Pressure Core Spray Line. The HPCS line penetrates the drywell to inject directly into the RPV. Isolation is provided by a check valve located inside the drywell, and a remote-manually actuated gate valve located as close as practicable to the exterior wall of the containment. Long-term leakage control is maintained by this gate valve. If a LOCA occurred, the gate valve would receive an automatic signal to open.

6.2.4.3.2.1.1.3 Low-Pressure Coolant Injection Lines. Satisfaction of isolation criteria for the three LPCI injection lines of the RHR system is accomplished by use of remote-manually operated gate valves and check valves. Both types of valves are normally closed with the gate valves receiving an automatic signal to open at the appropriate time to ensure that acceptable fuel design limits are not exceeded in the event of a LOCA. The check valves are located as close as practicable to the RPV. The normally closed check valves protect against overpressurization in the reactor coolant pressure boundary (RCPB) by preventing high-pressure reactor water from entering the RHR system low pressure piping. When the reactor pressure is lower than the RHR system pressure, the low energy of the influent fluid (220°F maximum) can open the check valve and inject water into the reactor.

6.2.4.3.2.1.1.4 Control Rod Drive Lines. The CRD system insert and withdraw lines penetrate the drywell. The classification of these lines is Code Group B and they are designed in accordance with ASME Section III, Class 2. The basis to which the CRD insert and withdraw lines are designed is commensurate with the safety importance of maintaining pressure integrity of these lines. The Hydraulic Control Units (HCUs) and scram discharge headers as well as the hydraulic lines are Seismic I, and are qualified to the appropriate accident environment. The failure and scram position of all power operated valves are compatible with system isolation and, at the same time, rod insertion on a scram.

The inboard isolation of insert and withdraw lines for the primary containment is provided by the double seals in the control rod drives and the outboard isolation for the primary containment is provided by valves within the HCUs. The HCU manual isolation valves 101 and 102 are provided for positive isolation in the unlikely event of a pipe break within the HCU. Additional isolation is provided by normally closed, fail-closed, solenoid operated Directional Control Valves (DCV) in the HCUs (see Figure 4.6-5). The DCVs open only during routine movement of their associated control rod and during a reactor scram. In addition, a ball check valve located in the CRD flange housing automatically seals the insert line in the event of a break.

Insert and withdraw lines that extend outside the primary containment are small and terminate in the Reactor building which is served by the SGT system. Containment overpressurization will not result from a line break in containment since these lines contain small volumes at low energy levels. External leak detection of CRD piping outside of primary containment is provided by operations during routing routine inspections.

Two Quality Class I check valves in series (CRD-V-524/525) are located at the discharge of the CRD pumps to prevent significant bypass leakage through the Quality Class II CRD piping to the condensate storage tank that could result if any leakage past the HCU were to exist. If the Quality Class II CRD piping breaks between the check valves and the CRD HCUs, the SGT system will process the effluent prior to release from secondary containment. Thus, the potential bypass path by means of this CRD path is minimized to prevent any significant offsite consequence.

The NRC staff concluded in NUREG-0803, “Safety Evaluation Report Regarding Integrity of BWR Scram Systems,” that although the CRD system represents a departure from GDC 55, the CRD containment isolation provision stated above is considered acceptable.

6.2.4.3.2.1.1.5 Residual Heat Removal and Reactor Core Isolation Cooling Head Spray Lines. The RHR head spray and RCIC lines meet outside the containment to form a common line which penetrates the drywell and discharges directly into the RPV. The check valve inside the drywell is normally closed. The check valve is located as close as practicable to the RPV. Two remote-manual block valves are utilized as isolation valves located outside the containment. The check valve ensures immediate isolation of the containment in the event of a line break. The block valve on the RHR line receives an automatic isolation signal while the block valve on the RCIC line is remote manually actuated to provide long-term leakage control.

6.2.4.3.2.1.1.6 Standby Liquid Control System Lines. The standby liquid control system line penetrates the drywell and connects to the HPCS system injection line. In addition to a check valve inside the drywell, a parallel pair of explosive actuated valves are located outside the drywell. Since the standby liquid control line is a normally closed, nonflowing line, rupture of this line is extremely remote. The explosive actuated valves function as outboard isolation valves. These valves provide a seal for long-term leakage control as well as preventing leakage of sodium pentaborate into the RPV during SLC system testing.

6.2.4.3.2.1.1.7 Reactor Water Cleanup System. The RWCU pumps, heat exchangers, and filter demineralizers are located outside the drywell. The return line from the filter demineralizers connects to the feedwater line outside the containment between the block valve and the outside containment feedwater check valve. Isolation of this line is provided by the feedwater system check valve inside the containment, the feedwater system check valve outside the containment, and an RWCU motor-operated gate valve outside the containment. The motor-operated gate valve functions as a third isolation valve.

In support of the RWCU Quality Group classification exception discussed in Section 1.8 (Regulatory Guide 1.26, Revision 3), additional defense in depth isolation, in the event of a RWCU HELB in the Radwaste Building, is provided by valves RWCU-V-5A, RWCU-V-5B, RWCU-V-768, and RWCU-V-769. Valve RWCU-V-5A is the suction side isolation valve for RWCU-P-1A and valve RWCU-V-B is the suction side isolation valve for RWCU-P-1B. The pumps are in a parallel arrangement such that either pump is capable of supplying the RWCU system. As such, both valves are required to close to isolate RPV. These valves isolate the 4" RWCU suction lines to their respective pumps. These valves are motor operated valves capable of being closed from an easily accessible, local control panel outside the RWCU pump room.

A small bore line provides a continuous source of cooler water to the RWCU pump suction to ensure adequate net positive suction head available (NPSHa). This line taps off the discharge of the RWCU non-regenerative heat exchanger and directs water to the common RWCU pump suction. Since this line effectively bypasses RWCU-V-5A and RWCU-V-5B, the two ¾ inch diameter valves RWCU-V-768 and RWCU-V-769 provide defense in depth break isolation. RWCU-V-768 is a Code Group D check valve inline for the small bore pump suction cooling line, while RWCU-V-769 is a Quality Group C manually operated valve downstream of the check valve along the normal cooling flow path (upstream in a postulated break with reverse flow through this line.)

During the postulated LOCA, it may be desirable to restore reactor coolant cleanup. For this reason, the motor-operated gate valve in the RWCU return line does not automatically isolate upon a containment isolation signal. If reactor coolant cleanup is not required, the return isolation valve RWCU-V-40 can be shut remotely from the control room when the motor-operated feedwater block valves are closed 20 minutes or more after the beginning of a LOCA. Should a break occur in the reactor water cleanup return line, the check valves would prevent significant loss of inventory and offer immediate isolation, while the outermost isolation valve would provide long-term leakage control.

6.2.4.3.2.1.1.8 Recirculation Pump Seal Water Supply Line. The recirculation pump seal water line extends from the recirculation pump through the drywell and connects to the CRD supply line outside the primary containment. The seal water line forms a part of the RCPB. The recirculation pump seal water line is Code Group B from the recirculation pump through the outboard motor operated isolation valve. From this valve to the CRD connection the line is Code Group D. Should this line fail, the flow rate through the broken line has been calculated to be substantially less than that experienced by a broken instrument line.

6.2.4.3.2.1.1.9 Low-Pressure Core Spray Line. The LPCS line penetrates the drywell to inject directly into the RPV. Isolation is provided by a check valve located inside the drywell and a remote-manually actuated gate valve located as close as practicable to the exterior wall of the containment. Long-term leakage control is maintained by this gate valve. If a LOCA occurs, this gate valve will receive an automatic signal to open, delayed only by control circuitry that ensures that the fluid pressure inside the RPV is less than the design pressure of the piping.

6.2.4.3.2.1.1.10 Residual Heat Removal Shutdown Cooling Return Lines. The two shutdown cooling return lines inject into the RRC lines downstream of the RRC pumps. Isolation is accomplished by a normally-closed, motor-operated gate valve outside containment and the parallel arrangement of a full-flow check valve and a normally closed, partial-flow, motor-operated gate valve inside the containment. Both motor-operated valves receive signals to close if RHR system water is needed to support the ECCS mode of the RHR system.

6.2.4.3.2.1.2 Effluent Lines. Effluent lines which form part of the RCPB and penetrate containment are equipped with at least two isolation valves; one inside the drywell and the other outside, located as close to the containment as practicable.

Table 6.2-16 also contains those effluent lines that comprise the RCPB and which penetrate the containment.

6.2.4.3.2.1.2.1 Main Steam, Main Steam Drain Lines, and Residual Heat Removal/Reactor Core Isolation Cooling Steam Supply Lines. The main steam lines extend from the RPV to the main turbine and condenser system, and penetrate the primary containment. Isolation is

afforded inside by a normally-open, fail-close, automatic, air-operated, y-pattern globe valve and outside by a similar in-line globe valve paralleled by smaller automatic motor-operated gate valves, one each in the between-MSIV drain line and in the MSLC system tap (isolated – MSLC system is deactivated). The main steam drain line, which comes off a common manifold tapping off each main steam line just upstream of each inside MSIV, also penetrates the containment and is isolated by automatic motor-operated gate valves, one inside the containment and one outside the containment. The RHR steam supply line and RCIC turbine steam line connect to the main steam line inside the drywell and penetrate the primary containment. For these lines, isolation is provided by automatically actuated block valves, two parallel valves inside the containment common to both the RHR steam supply line and the RCIC turbine steam line, and one for each line just outside the containment. The outside RHR steam supply line isolation valve has been deactivated and locked in the closed position.

6.2.4.3.2.1.2.2 Recirculation System Sample Lines. A 0.75-in. diameter sample line from the recirculation system penetrates the drywell and is designed to ASME, Section III, Class 1. A sample probe with a 1/8-in. diameter hole is located inside the recirculation line inside the drywell. In the event of a line break, the probe acts as a restricting orifice and limits the escaping fluid. Two automatic valves which fail close are provided; one inside and one outside the containment.

6.2.4.3.2.1.2.3 Reactor Water Cleanup System. The RWCU pumps, heat exchangers, and filter demineralizers are located outside the drywell. The supply line to the RWCU system connects to the reactor recirculation system lines on the suction side of the reactor recirculation pumps and to the RPV by means of the RPV drain line. Isolation of the RWCU lines is provided by two automatically actuated motor-operated gate valves. One valve is located inside containment and the other is located outside containment. Both valves are capable of remote manual operation from the control room.

6.2.4.3.2.1.2.4 Residual Heat Removal Shutdown Cooling Line. This line is common to the two trains of RHR shutdown cooling and is located on the A train RRC line just upstream of the pump. The inside motor-operated isolation gate valve, located as close as practical to the RPV, is paralleled by a small check valve. The valve is oriented to relieve a pressure build-up in the long section of line between the inside isolation valve and the outside isolation valve during those times when both valves are closed and the trapped line fluid heats and expands. The outside motor-operated containment isolation gate valve is located as close as practical to the containment. Both motor-operated valves automatically isolate on Level 3 to prevent further inventory loss in the event of a line break.

6.2.4.3.2.1.3 Conclusion on Criterion 55. To ensure protection against the consequences of accidents involving the release of radioactive material, pipes which form the RCPB have been shown to provide adequate isolation capabilities. A minimum of two barriers were shown to protect against the release of radioactive materials.

In addition to meeting the isolation requirements stated in Criterion 55, the pressure retaining components which comprise the RCPB are designed to meet other appropriate requirements which minimize the probability or consequences of an accidental pipe rupture. The quality requirements for these components ensure that they are designed, fabricated, and tested to the highest quality standards of all reactor plant components. The classification of components which comprise the RCPB are designed in accordance with the ASME, Section III, Class l.

Therefore, design of piping system which comprises the RCPB and penetrates containment satisfies Criterion 55.

6.2.4.3.2.2 Evaluation Against Criterion 56. Criterion 56 requires that lines which penetrate the containment and communicate with the containment interior must have two isolation valves, one inside the containment and one outside, unless it can be demonstrated that the containment isolation provisions for a specific class of lines are acceptable on some other basis.

Table 6.2-16 includes those lines that penetrate the primary containment and connect to the drywell and suppression chamber.

For the lines wherein only a single isolation valve exists, the discussion in Section 6.2.4.3.2.2.1.1 is germane. Also see Table 6.2-16 for further information on specific lines.

For those lines wherein both isolation valves are located outside containment, the discussions in Sections 6.2.4.3.2.2.3.2, 6.2.4.3.2.2.3.10 and 6.2.4.3.2.2.3.11 apply. Also see Table 6.2-16 for further information on specific lines such as the HCV system.

6.2.4.3.2.2.1 Influent Lines to Suppression Pool.

6.2.4.3.2.2.1.1 Low-Pressure Core Spray, High-Pressure Core Spray, and Residual Heat Removal Test and Minimum Flow Bypass Lines. The LPCS, HPCS, and RHR test lines have test isolation capabilities commensurate with the importance to safety of isolating these lines. Each line has a normally closed, motor-operated valve located outside the containment. Containment isolation requirements are met on the basis that the test lines are closed, low pressure lines constructed to the same quality standards as the containment. Furthermore, these lines are connected to ESF systems for which a single isolation valve is acceptable [as stated in NRC Standard Review Plan (SRP) 6.2.4, Section II, paragraph 6.e] based on the following prerequisites:

a. System reliability is improved with only one isolation valve in the line,

b. The system is closed outside containment and a single active failure can be accommodated with only one isolation valve,

c. The closed system is protected from missiles,

d. The closed system is designed to Seismic Category I, Safety Class 2, requirements and a minimum temperature and pressure rating at least equal to that for the containment, and

e. The piping between the isolation valve and containment is enclosed in the leak-tight housing, or conservative design of the piping and valve, conforming to SRP 3.6.2, precludes a breach of piping integrity.

The test return lines are also used for suppression chamber return flow during other modes of operation. In this manner the number of penetrations is reduced, minimizing the potential pathways for radioactive material release. Typically, pump minimum flow bypass lines join the respective test return lines downstream of the test return isolation valve. The bypass lines are isolated by motor-operated valves with a restricting orifice downstream of the motor-operated valve.

6.2.4.3.2.2.1.2 Reactor Core Isolation Cooling Turbine Exhaust, Vacuum Pump Discharge, and RCIC Pump Minimum Flow Bypass Lines. These lines, which penetrate the containment and discharge to the suppression pool, are equipped with a motor-operated, remote manually actuated gate valve located as close to the containment as possible. In addition, there is a simple check valve upstream of the gate valve which provides positive actuation for immediate isolation in the event of a break upstream of the check valve. The gate valve in the RCIC turbine exhaust is key-locked open in the control room and interlocked to preclude opening of the inlet steam valve to the turbine while the turbine exhaust valve is not in a full open position. The RCIC vacuum pump discharge line is also normally open but has no requirement for interlocking with steam inlet to the turbine. The RCIC pump minimum flow bypass line is isolated by a normally closed valve. The single valve is allowable because the water side of the RCIC system is a closed system analogous to the lines discussed in Section 6.2.4.3.2.2.1.1.

6.2.4.3.2.2.1.3 Residual Heat Removal Heat Exchanger Vent Lines. The RHR heat exchanger vent lines discharge through the RHR heat exchanger relief valve discharge lines to the suppression pool. Two globe valves in each vent line provide the system pressure boundary and are used to control venting during the RHR heat exchanger filling and draining operations. The outboard globe valve in each line is and meets the criteria for a containment system isolation valve. Both valves are normally closed, remotely controlled motor-operated globe valves. Each vent line is also equipped with a manual block valve and the test connections necessary for Type C testing of the isolation valve.

6.2.4.3.2.2.1.4 Low-Pressure Core Spray, High-Pressure Core Spray, and Residual Heat Removal Relief Valve Discharge Lines. These relief valves discharge to the suppression pool directly. They will not normally lift during operation and, therefore, can be considered as normally closed.

6.2.4.3.2.2.1.5 Fuel Pool Cooling and Cleanup Return Lines. Line is isolated by two normally-closed automatically actuated motor-operated gate valves, which are located outside the containment per NRC SRP 6.2.4, Section II, paragraph 6.d.

6.2.4.3.2.2.1.6 Deactivated Residual Heat Removal Steam Condensing Mode Steam Line Relief and Drain Lines. The four steam line relief valves (two per train) have been removed and the line flanges are blanked by "structural connections."

The two parallel-installed drain pot motor-operated globe valves (per train) are deactivated electrically and locked closed to maintain compliance with Criterion 56. Single isolation barriers are warranted on the basis that the RHR system is a closed system.

The RHR heat exchanger vents and relief valves along with the disabled CAC hydrogen recombiner drains and the discharge from RHR-RV-30 return to the wetwell through the deactivated steam condensing mode lines.

6.2.4.3.2.2.1.7 Process Sampling Suppression Pool Sample Return Line. Dual normally closed remote manual solenoid valves offer containment isolation. The valves are located outside the containment based on NRC SRP 6.2.4, Section II, paragraph 6.d.

6.2.4.3.2.2.2 Effluent Lines From Suppression Pool.

6.2.4.3.2.2.2.1 High-Pressure Core Spray, Low-Pressure Core Spray, Reactor Core Isolation Cooling, and Residual Heat Removal Suction Lines. These lines contain motor-operated, remote manually actuated, gate valves which provide assurance of isolating these lines in the event of a break. These valves also provide long-term leakage control. In addition, the suction piping from the suppression chamber is considered an extension of containment since it must be available for long-term usage following a design basis LOCA and, as such, is designed to the same quality standards as the containment. Thus, the need for isolation is conditional. The ECCS and RCIC fill systems (ECCS waterleg pumps) take suction from ECCS pump suppression pool suctions downstream of the isolation valve. This system is isolated from the containment by the respective ECCS pump suction valve from suppression pool as listed in Table 6.2-16.

6.2.4.3.2.2.2.2 Fuel Pool Cooling Suction Line. Two normally closed automatic motor-operated gate valves, located outside the containment (based on NRC SRP 6.2.4, Section II, paragraph 6.d), provide containment isolation.

6.2.4.3.2.2.2.3 PSR Suppression Pool Sample Line. Dual normally-closed remote manual solenoid valves offer containment isolation. The valves are located outside the containment (based on NRC SRP 6.2.4, Section II, paragraph 6.d).

6.2.4.3.2.2.3 Influent and Effluent Lines From Drywell and Suppression Chamber Free Volume.

6.2.4.3.2.2.3.1 Containment Atmosphere Control Lines (Deactivated). The containment atmosphere control system lines which penetrate the containment are equipped with two power-operated valves in series, normally closed. Since the CAC system has been deactivated, these valves have been de-energized. The motor operated gate valves have been locked closed, and the electrohydraulic operated valves are de-energized spring-closed. These valves provide assurance of isolating these lines in the event of a break and also provide long-term leakage control. In addition, the piping is considered an extension of containment boundary since it must remain intact following a design basis LOCA and, as such, is designed to the same quality standards as the primary containment.

6.2.4.3.2.2.3.2 Containment Purge Supply, Exhaust, and Inerting Makeup Lines. The drywell and suppression chamber purge lines have isolation capabilities commensurate with the importance to safety of isolating these lines. Each line has two air-operated spring closing isolation valves located outside the primary containment that are fully qualified to close under accident conditions. Containment isolation requirements are met on the basis that the purge lines are low pressure lines constructed to the same quality standards as the containment. Valve operability and reliability are enhanced by placement of both valves outside of the containment. The isolation valves for the purge lines are interlocked to preclude their being opened while a containment isolation signal exists as noted in Table 6.2-16.

Stainless-steel grills are installed across both purge supply line openings (one low in the drywell and the other low in the suppression chamber) and across the purge exhaust line opening high in the drywell. These prohibit debris from entering the purge lines, thus preventing the isolation valves from seating. The two remaining line openings (one purge exhaust and the single vacuum relief line that is not tied into a purge line, both of which are high in the suppression chamber) do not require debris screens because there is no probability of airborne debris during an accident (pipe insulation is not used in the suppression chamber) and the maximum anticipated suppression pool swell elevation is not sufficient to bring the surface of the water to either of these two openings.

There is a small branch line, which provides a makeup supply of nitrogen to inert containment, connected to the purge supply lines for both the drywell and suppression chamber. Each nitrogen makeup taps into its associated purge supply line inboard of the air-operated, spring-closing isolation valves. Therefore, each of these nitrogen lines is equipped with two automatic containment isolation valves, located as close as possible to primary containment.

6.2.4.3.2.2.3.3 Drywell and Suppression Chamber Air Sampling Lines. The radiation monitor lines penetrate the primary containment and are used for continuously sampling containment air during normal operation as part of the leak detection system. The supply lines are equipped with two automatic solenoid-operated isolation valves located outside and as close as possible to the containment. The return lines are equipped with a remotely operated solenoid isolation valve outside of containment and a check valve inside the containment.

The PSR system sample and return lines are normally isolated by dual solenoid valves. These do not receive automatic isolation signals since they may be used to sample the drywell and suppression chamber atmosphere in a post-LOCA situation.

6.2.4.3.2.2.3.4 Suppression Chamber Spray Lines. The suppression chamber spray lines penetrate the containment to remove energy by condensing steam and cooling noncondensable gases in the suppression chamber. Each line is equipped with a normally closed motor-operated valve located outside and as close as possible to the primary containment. This normally closed valve receives an automatic isolation signal. Containment isolation requirements are met on the basis that the spray header injection lines are normally closed, low pressure lines constructed to the same quality standards as the containment.

6.2.4.3.2.2.3.5 Reactor Building to Wetwell Vacuum Relief Lines. The three RB-WW vacuum relief lines are each equipped with a positive closing swing check valve in series with an air-operated, fail-open, butterfly valve. The air operator on the swing check valve is used only for testing. The air-operated butterfly valve is controlled by a differential pressure indicating switch which senses the pressure difference between the suppression chamber and the reactor building. When the negative pressure in the suppression chamber exceeds the instrument setpoint, the butterfly valve opens. The valves are not susceptible to fouling by ingested debris during such an event because they are not targets of missiles and are adequately protected from pipe break damage. The arrangement of valves and instruments is shown in Figure 9.4-8.

6.2.4.3.2.2.3.6 Drywell Spray Lines. The drywell spray lines are equipped with two normally closed, motor-operated gate valves located outside and as close as possible to primary containment. The drywell spray must be manually initiated. The piping from the outermost isolation valve to the spray ring header is constructed to withstand containment design conditions.

6.2.4.3.2.2.3.7 Reactor Closed Cooling Water Supply and Return Lines. Dual motor-operated automatic gate valves isolate each line, the former having both outside the containment and the latter having one inside and one outside the containment. In response to the concerns addressed in Generic Letter 96-06, Energy Northwest installed a bypass line around the inboard isolation valve on the return line. This bypass line is equipped with a check valve oriented against normal system flow. Thus, the check valve functions as an isolation valve in parallel with the main inboard isolation valve and as a means to dissipate pressure built up between the inboard and outboard isolation valves.

6.2.4.3.2.2.3.8 Air Supply Lines.

6.2.4.3.2.2.3.8.1 Check Valve Air Supply Lines. All lines are isolated by two locked-closed manual globe valves located outside the containment and as close as practical to the containment. The air test function is not used. Therefore, the valves are normally closed all of the time.

6.2.4.3.2.2.3.8.2 Primary Containment Instrument Air System Nitrogen Supply Lines. These lines consist of a check valve inside the containment and a motor-operated remote-manual globe valve outside the containment. The globe valves are under the control of the operator who can isolate the single nonsafety-related header should the containment nitrogen (CN) supply be unavailable. The operator can also isolate either or both safety-related headers should either, or both, experience nitrogen supply problems or otherwise require isolation. See Table 6.2-16 for further information.

6.2.4.3.2.2.3.8.3 Service Air System Maintenance Supply Line to the Drywell. This single line is capped with a threaded pipe cap inside the containment and isolated outside the containment by a locked-closed manual globe valve.

6.2.4.3.2.2.3.9 Demineralized Water Maintenance Supply Line to the Drywell. Dual manual gate valves, one inside and one outside the containment, isolate this line at all times except when high purity water is required inside the drywell for maintenance-related activities.

6.2.4.3.2.2.3.10 Drywell Equipment and Floor Drain Lines. Containment isolation is provided by two normally open, air-operated, fail-close automatic valves located outside and as close as practical to the containment.

6.2.4.3.2.2.3.11 Traversing In-Core Probe (TIP) System Guide Tubes. The TIP system consists of five guide tubes which penetrate the containment and interface with the containment atmosphere because of indexer leakage and built-in relief valves that prevent the indexers from collapsing on high pressure. The isolation design basis for these TIP lines is a "specific class of line" considered acceptable under General Design Criterion 56.

Isolation is accomplished by a seismically qualified solenoid-operated ball valve, which is normally closed. To ensure isolation capability, an explosive shear valve is installed in each line. Upon receipt of a signal (manually initiated by the operator) this explosive valve will shear the TIP cable and seal the guide tube.

When the TIP system is inserted, the ball valve of the selected tube opens automatically so that the probe and cable may advance. A maximum of five valves may be opened at any one time to conduct calibration and any one guide tube is used, at most, a few hours per year.

If closure of the line is required during calibration, a signal causes a cable to be retracted and the ball valve to close automatically after completion of cable withdrawal. If a TIP cable fails to withdraw or a ball valve fails to close, the explosive shear valve is actuated. The ball valve position is indicated in the control room.

The ball valve and shear valve are located outside the drywell and as close as practical to the containment. These valves are designed to Code Group B requirements, therefore they are of the same quality class as the containment.

6.2.4.3.2.2.4 Conclusion on Criterion 56. To ensure protection against the consequences of accidents involving release of significant amounts of radioactive materials, pipes that penetrate the containment have been demonstrated to provide isolation capabilities in accordance with Criterion 56 or other defined bases.

In addition to meeting the above isolation requirements, the pressure retaining components of most of these systems are designed to the same quality standards as the containment. For exceptions, see Section 6.2.4.3.2.4.

6.2.4.3.2.3 Evaluation Against Criterion 57. Lines forming a closed system outside the primary reactor containment must have one isolation valve outside if the system boundary penetrates the containment. All closed systems outside primary containment at Columbia have at least one isolation valve if they penetrate primary containment which provides isolation capabilities in accordance with Criterion 57.

6.2.4.3.2.4 Evaluation Against Regulatory Guide 1.11, Revision 0. Instrument lines which penetrate the containment from the RCPB are equipped with a restricting orifice located inside the drywell and an excess flow check (EFC) valve located outside and as close as practicable to the containment. Those instrument lines which do not connect to the RCPB are equipped with single solenoid-operated or EFC isolation check valves. Valve position indication is available in the control room.

The EFC valves have no active safety function requirements. However, the RCPB instrument line EFC valves close to limit the flow in the respective instrument lines in the event of an instrument line break downstream of the EFC valve outside containment. The instrument lines are Seismic Category I and are assumed to maintain integrity for all accidents except for the instrument line break accident (ILBA) as described in Section 15.6.2. Isolation of the instrument line by the EFC valve is not credited for mitigating the ILBA.

Each EFC valve has an integral manual bypass valve which may be used to reset an actuated disc. The bypass valves are periodically verified to be closed.

The hydrogen/oxygen monitoring lines penetrate primary containment and are used to continuously monitor the containment air during the post-LOCA accident period. These lines are equipped with single solenoid-operated or EFC valves located outside and as close as possible to the containment. Containment isolation requirements are met on the basis that these are low pressure lines constructed to the same quality standards as the containment. The solenoid-operated valves are required to remain open during normal operation and postaccident for those DBAs for which containment isolation is required to limit offsite dose consequences to less than established requirements. Accordingly, they receive no automatic isolation signal or leak rate testing. No credit is taken for either the automatic or remote manual closing of these valves for containment isolation for the DBAs. Therefore, position indication requirements do not apply to the solenoid-operated valves.

6.2.4.3.3 Failure Mode and Effects Analyses

In single failure analysis of electrical systems, no distinction is made between mechanically active or passive components. All fluid system components such as valves are considered electrically active whether or not mechanical action is required.

Electrical as well as mechanical systems are designed to meet the single failure criterion for both mechanically active and passive fluid system components regardless of whether that component is required to perform a safety action. Even though a component such as an electrically operated valve is not designed to receive a signal to change state (open or closed) in a safety scheme, it is assumed as a single failure that the system component changes state or fails. Electrically operated valves include those that are electrically piloted but air operated as well as those that are directly operated by an electrical device. In addition, all electrically

operated valves that are automatically actuated can also be manually actuated from the main control room. Therefore, a single failure in any electrical system is analyzed regardless of whether the loss of a safety function is caused by a component failing to perform a requisite mechanical motion or a component performing an unnecessary mechanical motion.

6.2.4.3.4 Operator Actions

A trip of an isolation control system channel is annunciated in the main control room. Most motor-operated and air-operated isolation valves have open-close status lights. The following general information is presented to the operator by the isolation system:

a. Annunciation of each process variable which has reached a trip point,

b. Computer readout of trips on main steam line tunnel temperature or main steam line excess flow,

c. Control power failure annunciation for each channel, and

d. Annunciation of steam leaks in each of the systems monitored (main steam, reactor water cleanup, and reactor heat removal).

If the primary containment and reactor vessel isolation system does not automatically shut an isolation valve, the "isolation signal" column of Table 6.2-16 references the applicable note which discusses the isolation criteria including operator action based on specific input available to the operator.

This information will enable the operator to determine the need to operate a remote manual valve in the event of a LOCA.

6.2.4.4 Tests and Inspections

The containment isolation system is periodically tested during reactor operation and shutdown. The functional capabilities of power operated isolation valves are tested remote manually from the main control room. By observing position indicators and/or changes in the affected system operation, the closing ability of a particular isolation valve is demonstrated. A discussion of testing and inspection pertaining to isolation valves is provided in Section 6.2.1. Table 6.2-16 lists the process line isolation valves.

The EFC valves used as single reactor instrument sensor line isolation valves are periodically tested to meet the requirements of Regulatory Guide 1.11 and the Technical Specifications Surveillance Requirements. As these valves are outside the containment and accessible, periodic visual inspection is performed in addition to the operational check. Sensor lines

emanating from the suppression pool, the suppression chamber, or the drywell free volume are periodically tested on a sampling basis in accordance with the plant maintenance program.

Preoperational testing is discussed in Section 14.2.12. Containment isolation valve leakage rate testing is discussed in the notes in Figures 6.2-36 through 6.2-59.

6.2.5 COMBUSTIBLE GAS CONTROL IN CONTAINMENT

Combustible gas control is provided to ensure containment integrity when hydrogen and oxygen gases are generated following a postulated LOCA. The RHR system operating in containment spray mode and redundant reactor head area return fans augment the natural processes to mix the containment atmosphere. The oxygen and hydrogen concentrations in the containment atmosphere are monitored by instrumentation discussed in Section 7.5.1.5. To supplement the combustible gas control system, the containment nitrogen inerting system provides a nitrogen atmosphere in primary containment.

6.2.5.1 Design Bases

The design bases for the containment atmosphere control system are as follows:

a. The system is designed in accordance with 10 CFR 50.44;

b. Primary containment will be inerted to an oxygen concentration of less than or equal to 3.5% by volume during normal plant operation;

c. Containment sprays, natural turbulence resulting from diffusion and convection caused by the elevated temperatures, and operation of the containment head area return fans, if necessary, ensure that no local pocket with greater than 5% oxygen can occur within containment;

6.2.5.2 System Design

The system consists of the following:

a. An atmosphere mixing system which could operate if necessary to ensure a well mixed atmosphere in both the drywell and suppression chamber. This system consists of the containment spray system which can be actuated approximately 10 minutes after the postulated LOCA, and containment head area return fans which start on receipt of a reactor scram signal;

b. A monitoring system measures the concentration of hydrogen and oxygen in the drywell and suppression chamber atmosphere; and

6.2.5.2.1 Atmosphere Mixing System

The function of the atmosphere mixing system is to provide a well mixed atmosphere in the drywell and suppression chamber.

Using experimental results (Reference 6.2-18) as a basis for hydrogen and oxygen mixing within the containment, hydrogen or oxygen distribution in the steam nitrogen-oxygen atmosphere would simulate that of the iodine fission products (References 6.2-19 and 6.2-20) and it would be uniform throughout the containment. Accordingly, it is extremely unlikely that an atmosphere mixing system would be required.

However, the RHR system operating in containment spray mode and redundant reactor head area return fans are available to augment these natural processes.

The RHR system containment spray system is described in Section 5.4.7. It may be manually actuated from the main control room to provide mechanical mixing of the drywell atmosphere.

The two head area return fans are part of the primary containment cooling system, discussed in Section 9.4.11.2.

The redundant reactor head area return fans are available to exhaust atmospheric gases and vapors from the reactor head area above the refueling bulkhead plate to the main portion of the drywell. Both fans start automatically upon reactor scram and are powered from different Class 1E electrical divisions. Atmospheric gases and vapors exhausted from the reactor head area by the fan(s) are replaced by flow from the drywell area through the two vent paths through the bulkhead plate as portrayed in Figure 6.2-24. This recirculation prevents formation of pockets of combustible gases both in the reactor head area and in the drywell below the bulkhead plate.

6.2.5.2.2 Hydrogen and Oxygen Concentration Monitoring System

Both the oxygen and the hydrogen concentrations are continuously monitored during normal operation and following the postulated LOCA, and are displayed in the control room. A visual and audible alarm initiates in the control room if the oxygen concentration reaches 3.5% by volume. This alarm alerts operators to take action to limit the pre-LOCA oxygen concentration to 3.5% or less to ensure that post-LOCA oxygen concentrations will not exceed the limit of 4.8%. If oxygen concentration approaches 4.4% by volume, a visual and audible high-high level alarm initiates in the control room.

The hydrogen and oxygen gas analyzers, number and location of sampling points, and instrumentation are discussed in Section 7.5.1.5.

Calibration tests are routinely performed to calibrate and verify instrument accuracy against known gas compositions.

Two redundant hydrogen and oxygen concentration monitoring systems are provided.

6.2.5.2.3 Containment Purge

Containment purge is discussed in Section 6.2.1.1.8.

6.2.5.3 Design Evaluation

The determination of the time-dependent oxygen and hydrogen concentrations in the drywell and suppression chamber atmospheres is based on a two-region model of the primary containment: a drywell and suppression chamber atmosphere. The rate of radiolytic hydrogen and oxygen generation varies linearly with power.

The released fission products, excluding noble gases, that are mixed with the coolant are assumed to be swept out of core as the core cooling waters exit the break and flow by gravity by means of the downcomers to the suppression chamber.

Hydrogen generated from the metal-water reaction and both hydrogen and oxygen generated from core radiolysis are assumed released to the drywell atmosphere and mix homogeneously. Hydrogen as well as oxygen generated from suppression pool radiolysis are assumed released to the suppression chamber atmosphere and mix homogeneously.

The hydrogen and oxygen monitors are accurate at the anticipated concentration in the primary containment.

6.2.5.3.1 Hydrogen and Oxygen Generation

In the period immediately after the postulated LOCA, hydrogen can be generated by radiolysis, metal-water, and metallic paint-water reactions. However, in evaluating short-term hydrogen generation, the contribution from radiolysis and metallic paint-water reactions are insignificant in comparison with the hydrogen generated by the metal-water reaction.

During the same time period oxygen is generated by radiolysis only. However, the contribution from radiolysis is small compared with the initial 3.5% oxygen concentration within containment prior to the postulated LOCA.

The generation of hydrogen by metal-water reaction is dependent on the temperature of the cladding at the time the postulated LOCA occurs. Based on LOCA calculations and ECCS performance in accordance with 10 CFR 50.46, the extent of metal-water reaction in the BWR/5 core is negligible. The design of the BWR/5 ECCS is such that the peak Zircaloy clad

temperature is less than 2000°F. At this temperature virtually no metal-water reaction occurs and, therefore, hydrogen production by this means is insignificant.

6.2.5.4 Testing and Inspections

The RHR drywell spray mode of operation is tested in accordance with Technical Specifications. The head area return fan testing is discussed in Section 9.4.11.4. Testing of the hydrogen and oxygen monitoring is discussed in Section 7.5.1.5.4.

6.2.5.5 Instrumentation Requirements

See Sections 7.5.1.5.4 and 9.4.11.5.

6.2.5.6 Materials

See Section 6.2.5.2.

6.2.5.7 Containment Nitrogen Inerting System

The system is designed to establish and maintain a nitrogen atmosphere in which the oxygen concentration can be controlled at less than 3.5% by volume in both the drywell and suppression pool during normal operation. The system is designed to comply with NRC staff position of April 2, 1981, requiring that "the GE pressure suppression containment systems identified by Mark I and Mark II, be inerted."

6.2.6 CONTAINMENT LEAKAGE TESTING

General Design Criteria 52, 53, and 54 have been met.

6.2.6.1 Containment Leakage Rate Tests

The primary containment system is a steel pressure suppression system of the over and under configuration with a designed leakage rate of 0.5% by volume per day at 45 psig. A maximum allowable integrated vessel leak rate of 0.5% by weight per day at 38 psig has been established to limit leakage during and following the postulated DBA to less than that which would result in offsite doses greater than those specified in 10 CFR 50.67. Leakage rate tests at reduced pressures may be established such that the measured leakage rate does not exceed the maximum allowable at that reduced pressure.

A structural integrity test involving pneumatic pressurization of the drywell and suppression chamber was performed at 51.8 psig, 1.15 times the containment vessel design pressure of 45 psig. This test was conducted in accordance with the ASME Boiler and Pressure Vessel

Code, Section III, 1971 Edition through the Summer 1972 Addenda, Subarticle NE-6300. See Section 3.8.2.7 for a description of the test.

Testing involves performing periodic Type A, B, and C tests. These tests are conducted in accordance with the Technical Specifications and 10 CFR 50, Appendix J. Table 6.2-14 lists the containment penetrations subject to Type B tests. Table 6.2-16 lists the primary containment isolation valves subject to Type C tests unless otherwise noted.

6.2.6.2 Special Testing Requirements

The secondary containment is tested at each refueling outage to ensure the maximum allowable leakage rate of 100% of secondary containment free volume per day at negative 0.25-in. water gauge pressure with respect to outside atmospheric pressure. Further testing is summarized in Section 6.2.3.4. Other testing requirements are contained in the Technical Specifications.

6.2.7 REFERENCES

6.2-1 James, A. J., "The GE Pressure Suppression Containment Analytical Model," NEDO-10320, March 1971.

6.2-2 James, A. J., "The GE Pressure Suppression Containment Analytical Model," Supplement 1, NEDO-10320, May 1971.

6.2-3 Moody, F. J., "Maximum Two-Phase Vessel Blowdown from Pipes," Topical Report APED-4824, GE Company.

6.2-4 "MK II Containment Dynamic Forcing Functions Information Report (Revision 2)," GE and Sargeant and Lundy, NEDO-21061, September 1976.

6.2-5 "Plant Design Assessment Report for SRV and LOCA Loads (Revision 3)," Washington Public Power Supply System, August 1979.

6.2-6 J. D. Duncan and J. E. Leonard, "Emergency Cooling in BWRs Under Simulated Loss-of-Coolant (BWR PLECMP) Final Report," GEAP-13197, GE, June 1971.

6.2-7 WPPSS Report, "Drywell to Wetwell Leakage Study," WPPSS-74-2-R5, July 1974. (Supply System to NRC, Letter G02-74-17, dated August 9, 1974).

6.2-8 Wheat, L. L., Wagner, R. J., Niederauer, G. F., Obenchain, C. F., CONTEMPT-LT-- A Computer Program For Predicting Containment Pressure-Temperature Response To A Loss-Of-Coolant Accident, ANCR-1219, Aeroject Nuclear Company, June 1975.

6.2-9 Washington Public Power Supply System, Nuclear Project No. 2, Report No. WPPSS-74-2-R2-A, "Sacrificial Shield Wall Design Supplemental Information," February 11, 1975.

6.2-10 Washington Public Power Supply System, WPPSS Nuclear Project No. 2 Response to NRC Comments, Report No. WPPSS-74-2-R2-A, "Sacrificial Shield Wall Design Supplemental Information," June 26, 1975.

6.2-11 Washington Public Power Supply System, Nuclear Project No. 2, Report No. WPPSS-74-2-R2-B, "Sacrificial Shield Wall Design Supplemental Information," August 19, 1975.

6.2-12 Letter from R. C. DeYoung, NRC, to J. J. Stein, WPPSS, dated August 13, 1975, Subject: Sacrificial Shield Wall Design.

6.2-13 Letter from R. C. DeYoung, NRC, to J. J. Stein, WPPSS, dated October 15, 1975, Subject: Sacrificial Shield Wall Design.

6.2-14 ANCR-NUREG-1335, "RELAP4/MOD5 - A Computer Program for Transient Thermal-Hydraulic Analysis of Nuclear Reactor and Related Systems Users Manual," 3 Volumes, September 1976.

6.2-15 AEC-TR-6630, "Handbook of Hydraulic Resistance, Coefficients of Local Resistance and of Friction," by I. E. Idel'Chick, 1960.

6.2-16 Bilanin, W. J., "The GE Mark III Pressure Suppression Containment System Analytical Model," NEDO-20533.

6.2-17 "Loss-of-Coolant Accident and Emergency Core Cooling Models for GE Boiling Water Reactors," Licensing Topical Report, NEDO-10329, GE.

6.2-18 A. K. Post and B. M. Johnson, "Containment Systems Experiment Final Program Summary," BNWL-1592, Battelle Northwest, Richland, Washington, July 1971.

6.2-19 J. G. Knudsen and R. K. Hilliard, "Fission Product Transport by Natural Processes in Containment Vessels," BNWL-943, Battelle Northwest, Richland, Washington, January 1969.

6.2-20 R. K. Hilliard and L. F. Coleman, "Natural Transport Effects on Fission Product Behavior in the Containment Systems Experiment," BNWL-1457, Battelle Northwest, Richland, Washington, December 1970.

6.2-21 R. K. Hilliard, "Removal of Iodine and Particles from Containment Atmospheres by Sprays -- Containment Systems Experiment Interim Report," BNWL-1244, Battelle Northwest, Richland, Washington, February 1970.

6.2-22 D. K. Sharma, "Technical Description Annulus Pressurization Load Adequacy Evaluation," January 1979 (NEDO 24548).

6.2-23 "Studies of BWR Design for Mitigation of Anticipated Transients Without Scram," NEDO-20626, October 1974.

6.2-24 GE Response to NRC Status Report, "GE ATWS Report," and Appendices, June and September, 1976 (Proprietary).

6.2-26 "Flow of Fluids Through Valves, Fittings, and Pipe," Technical Paper No. 410, Crane Company, 1980.

6.2-27 NEDE-21544-P, "Mark II Pressure Suppression Containment Systems: An Analytical Model of the Pool Swell Phenomenon."

6.2-28 Response to NRC Question 020.071, transmitted by Letter MFN-275-78 to J. F. Stolz, Chief Light Water Reactor Branch No. 1, NRC, from L. J. Sobon, Manager BWR Containment Licensing, GE Company on "Responses to NRC Request for Additional Information (Round 3 Questions)," dated June 30, 1978.

6.2-29 Burns and Roe Calculation Number 5.07.10.1, "Blowdown of 6 inch RCIC (1)-4 at RPV - Constant Blowdown Model."

6.2-30 Burns and Roe Calculation Number 5.07.10.2, "Blowdown of 6 inch RCIC (1)-4 at RPV - Relap 4 Model."

6.2-31 Letter from GE to Washington Public Power Supply System, GEWP 2-77-533, Transmittal of the Mass/Energy Report Entitled, "Mass and Energy Release for Suppression Pool Temperature Analysis During Relief Valve and LOCA Transients."

6.2-32 Request for Amendment to the Facility Operating License and Technical Specifications to Increase Licensed Power Level From 3323 MWt to 3486 MWt with Extended Load Line Limit and a Change in Safety Relief Valve Setpoint Tolerance, Supply System to NRC Letter G02-93-180, dated July 9, 1983.

6.2-33 Letter, JW Clifford (NRC) to JV Parrish (Washington Public Power Supply System), "Issuance of Amendment for the Washington Public Power Supply System Project No. 2 (TAC NOS. M87076 and M88625)," dated May 2, 1995.

6.2-34 Engineering Evaluation of the Sacrificial Shield Wall, Supply System to NRC Letter GO2-80-172, August 8, 1980.

6.2-35 GE Nuclear Energy, "WNP-2 Power Uprate Project NSSS Engineering Report," GE-NE-208-17-0993, Revision 1, December 1994.

6.2-36 Deleted.

6.2-37 GE Nuclear Energy, "Washington Public Power Supply System Nuclear Project 2, SAFER/GESTR-LOCA Loss-of-Coolant Accident Analysis," NEDC-32115P, Class III (Proprietary), DRF A00-05078, Revision 2.

6.2-38 GE Nuclear Energy, "Washington Public Power Supply System Nuclear Project 2, SRV Setpoint Tolerance and Out-of-Service Analysis," GE-NE-187-24-0992, Revision 2.

6.2-39 Numerical Applications, Inc., "GOTHIC Containment Analysis Package Users Manual," Version 7.1, January 2003.

6.2-40 NRC Branch Technical Position CSB 6-3, "Determination of Bypass Leakage Paths in Dual Containment Plants."

6.2-41 Calculation NE-02-01-05, "Secondary Containment Drawdown."

6.2-42 GE Hitachi Nuclear Energy, "Technical Specification Change Support for RHR/LPCI and LPCS Flow Rate Long-Term LOCA Containment Response and ECCS/Non-LOCA Evaluations," NEDC-33813P, Class III (Proprietary), Revision 2, September 2013.

6.2-43 ARTS/MELLLA Task T0401A (CVI-1133-00,20) "Subcompartment (Annulus) Pressurization Loads-Mass and Energy Releases."

6.2-44 GE-Hitachi Nuclear Energy, "Safety Analysis Report for Columbia Generating Station Thermal Power Optimization," NEDC-33853P, March 2016.

Table 6.2-1

Containment Design Parameters

			Drywell	Suppression Chamber
A.	Drywell and Suppression Chamber			
	1.	Internal design pressure, psig	45	45
	2.	External design pressure, psig	2	2
	3.	Drywell deck design differential pressure, psid	25 (downward) 6.4 (upward)	
	4.	Design temperature, °F	340	275
	5.	Net free volume, ft^3 (drywell includes vents)	200,540	144,184 maximum
	6.	Maximum allowable leak rate, %/day	0.5	0.5
	7.	Suppression chamber free volume, minimum, ft^3		142,500
	8.	Suppression chamber water volume minimum,[a] ft^3		112,197
	9.	Pool cross section area, ft^2		5,770
	10.	Pool free surface cross section area, ft^2		4,520
	11.	Pool depth (normal), ft		31
B.	Vent System			
	1.	Number of downcomers		99
	2.	Downcomer inside diameter, ft		1.995
	3.	Total vent area, ft^2		309
	4.	Downcomer maximum submergence, ft		12
	5.	Downcomer loss factor		2.77

[a] This volume does not include the water within the pedestal (10,065 ft^3) nor the water 12 ft below the downcomer exits (15,000 ft^3)

Table 6.2-2

Engineered Safety Systems Information
for Containment Response Analyses

	Full Capacity	Value Used in Containment Analysis			
		Case A	Case B	Case C	Reduced ECCS Flow Case C
A. Drywell Spray System					
1. Number of pumps	2	2	1	N/A	N/A
2. Number of lines	2	2	1	N/A	N/A
3. Number of headers/line	1	1	1	N/A	N/A
4. Spray flow rate, gpm/pump	7450	6713[b,d]	6713[b]	N/A	N/A
5. Spray thermal efficiency, %	100	100	100	N/A	N/A
B. Suppression Pool Spray					
1. Number of pumps	2	2	1	N/A	N/A
2. Number of lines	2	2	1	N/A	N/A
3. Number of headers/line	1	1	1	N/A	N/A
4. Spray flow rate, gpm/pump	450	353[b]	353[b]	N/A	N/A
5. Spray thermal efficiency, %	100	100	100	N/A	N/A
C. Containment Cooling System					
1. Number of pumps	2	2	1	1[a]	1
2. Pump capacity, gpm/pump	7900	7067[b]	7067[b]	7067[b]	6713

Table 6.2-2

Engineered Safety Systems Information
for Containment Response Analyses (Continued)

	Full Capacity	Value Used in Containment Analysis			
		Case A	Case B	Case C	Reduced ECCS Flow Case C
3. Heat Exchangers RHR system inverted U tube, single pass shell, multi pass tubes, vertical mounting					
a. Number	2	2	1	1[a]	1
b. Heat transfer area, ft^2/Unit	7641	7641	7641	7641	7641
c. Overall heat transfer coefficient, Btu/hr ft^2 °F	195(fouled) 400(clean)	195	195	195	195
d. Standby service water flow rate per exchanger, gpm	7400	7400	7400	N/A	N/A
e. RHR heat exchanger K value Btu/sec-°F	414(fouled) 849(clean)	N/A	N/A	289	f
f. Design service water temperature					
minimum, °F	32°F	95[b]	95[b]	90	f
maximum, °F	85°F				
g. Containment heat removal capability per loop, using 85°F service water and 165°F pool temperature; Btu/hr			83.23×10^6		

Table 6.2-2

Engineered Safety Systems Information
for Containment Response Analyses (Continued)

	Full Capacity	Value Used in Containment Analysis			
		Case A	Case B	Case C	Reduced ECCS Flow Case C
D. ECCS Systems					
1. High pressure core spray (HPCS)					
a. Number of pumps	1	1	1	1[a]	1
b. Number of lines	1	1	1	1[a]	1
c. Flow rate, gpm	6350	6250	6250	6250[a]	6250
2. Low pressure core spray (LPCS)					
a. Number of pumps	1	1	0	0[a]	0
b. Number of lines	1	1	0	0[a]	0
c. Flow rate, gpm	6350	6250	0	0[a]	0
3. Low-pressure coolant injection (LPCI)					
a. Number of pumps	3	1[e]	1	1[a]	1
b. Number of lines	3	1[e]	1	1[a]	1
c. Flow rate, gpm 1 pump	7450[c]	7067[b]	7067[b]	7067[a,b]	6713

Table 6.2-2

Engineered Safety Systems Information
for Containment Response Analyses (Continued)

		Full Capacity	Value Used in Containment Analysis			
			Case A	Case B	Case C	Reduced ECCS Flow Case C
4. Residual heat removal (RHR)						
a. Pump flow rate:	shell side	7450	0	0	0	0
	tube-side	7400	0	0	0	0
b. Source of cooling water			Standby service water			
E. Automatic Depressurization System						
1. Total number of safety/relief valves		18[a]				
2. Number actuated on ADS		7[a]				

[a] No change due to uprate. Reference 6.2-35
[b] Represents conservative value used in analysis.
[c] Increase to 7900 gpm with zero differential pressure between RPV and wetwell.
[d] Only 2 of 3 LPCI pumps available for spray, and only after 600 seconds.
[e] Three LPCI pumps available; 2 pumps directed to drywell sprays after 600 seconds, with third pump continuing in LPCI mode.
[f] SW temperature is 85°F for 10 hours then 90°F thereafter; RHR heat exchanger K value varies from 284.5 to 288.8 Btu/sec-°F with suppression pool temperature.

Table 6.2-3

Accident Assumptions and Initial
Conditions for Recirculation Line Break

A. Effective accident break area (total), ft^2	3.106/3.189[d]
B. Components of effective break area:	
1. Recirculation line suction nozzle area, ft^2	2.508[a]
2. RWCU cross tie line ft^2	0.078[a]
3. Jet pump nozzles, ft^2	0.520[a]
C. Break area/vent area ratio	0.0105/0.0103[d]
D. Primary system energy distribution[b]	
1. Steam and liquid energy, 10^6 Btu	414/361[d]
2. Sensible energy, 10^6 Btu	
a. Reactor vessel	106.1/220[d]
b. Reactor internals (less core)	58.6[e]
c. Primary system piping	34.6[e]
d. Fuel	(c)
E. Assumptions used in pressure transient analysis	
1. Feedwater flow coastdown time	39.6
2. MSIV closure time (sec)	3.5/3.0[d]
3. Scram time (sec)	<1[a]
4. Liquid carryover, %	100[a]
5. Turbine throttle valve closure (sec)	0.2

[a] No change due to uprate.
[b] All energy values except fuel are based on a 32°F datum.
[c] Fuel energy is based on a 285°F datum.
[d] Second value represents conservative value used in analysis.
[e] Reactor vessel sensible energy includes reactor internals (less core) and primary system piping.

Table 6.2-4

Initial Conditions Employed
in Containment Response Analyses

		Original Rated Power Cases	Uprated Power	Reduced ECCS Flow
A.	Reactor coolant system (at 105% of rated steam flow and at normal liquid levels)			
1.	Reactor power level, MWt	3462	3702	3556
2.	Average coolant pressure, psig	1020	1020	1020
	Peak coolant pressure, psia	1055	1055	1055
3.	Average coolant temperature, °F	547	551	551
4.	Mass of reactor coolant system liquid, lb	676,700	634,300	634,300
5.	Mass of reactor coolant system steam, lb	24,900	24,740	24,740
6.	Volume of water in vessel,[a] ft^3	12,743	13,282	13,282
7.	Volume of steam in vessel,[b] ft^3	10,167	10,397	10,397
8.	Volume of water in recirculation loops, ft^3	670	(a)	(a)
9a.	Volume of water in feedwater line,[c] ft^3	543		
9b.	Mass of water in feedwater line, lb		693,034	693,034
10.	Volume of water in miscellaneous lines,[c] ft^3	121	(a)	(a)
11.	Total reactor coolant volume, ft^3	23,580	23,679	23,679
12.	Stored water			
	a. Condensate storage tanks, gal (min)	135,000	N/A	N/A
	b. Fuel storage pool, gal	350,000	N/A	N/A

Table 6.2-4

Initial Conditions Employed
in Containment Response Analyses (Continued)

	Original Rated Power Cases	Uprated Power	Reduced ECCS Flow
	Drywell/ Suppression Chamber	Drywell/ Suppression Chamber	Drywell/ Suppression Chamber
B. Containment			
1. Pressure, psig	0.7/0.7	2.0/2.0	2.0/2.0
2. Inside temperature, °F	135/90	135/90	150/90
3. Outside temperature, °F	NA/NA	NA/NA	NA/NA
4. Relative humidity, %	50/100	50/100	20/100
5. Service water temperature, °F	95/95	90/90	(d)/(d)
6. Water volume, ft^3	NA/ 107,850	NA/ 107,850	NA/ 107,850
7. Vent submergence, ft	NA/12	NA/12	NA/12

[a] Item 6 includes items 8 and 10.
[b] Item 7 includes the main steam lines up to the inboard MSIV.
[c] Up to inboard isolation valve.
[d] 85°F for 10 hours then 90°F thereafter

Table 6.2-5

Summary of Accident Results for Containment Response to Limiting Line Breaks

Accident Parameters	Original Rated Power		Uprated Power	Reduced ECCS Flow
	Recirculation Line Break[a]	Steam Line Break[b]	Recirculation Line Break	Recirculation Line Break
1. Peak drywell pressure, psig	34.69	34.0	37.4[c,d]	35.3[c]
2. Peak drywell diaphragm floor differential pressure, psid	19.39	19.1	21.7	(f)
3. Time (S) of Peak Pressures, Sec.	19.0	12.0	11.9	(g)
4. Peak drywell temperature, °F	280.2	328	283[c]	281[c]
5. Peak suppression chamber pressure, psig	27.3		31.3	30.3
6. Time of peak suppression chamber pressure, sec.	55	55	139	(g)
7. Peak suppression pool temperature during blowdown, °F (~100 sec.)	140	140	146	148.3
8. Peak suppression pool temperature, long term, °F	220	220	204.5	203.8
9. Calculated drywell margin, %[e]	22.9	24.5	16.9	(f)
10. Calculated suppression chamber margin, %[e]	38.6	38.0	30.4	24.6
11. Calculated deck differential pressure margin, %	22.44	23.6	13.2	(f)
12. Energy released to containment at time of peak pressure, 10^6 Btu	260	204	174	(f)
13. Energy absorbed by passive heat sinks at time of peak pressure, 10^6 Btu	0	0	0	0

Table 6.2-5

Summary of Accident Results for Containment Response to Limiting Line Breaks (Continued)

[a] See Figures 6.2-3 and 6.2-7 for plots of pressures versus time and Figures 6.2-4 and 6.2-9 for plots of temperature versus time.

[b] See Figures 6.2-15 and 6.2-16 for plots of pressure and temperature versus time respectively.

[c] For initial containment pressure of 2.0 psig.

[d] The value of P_a to be used for 10 CFR 50 Appendix J testing was conservatively chosen to be 38 psig.

[e] $\frac{\text{(Design Pressure - Maximum Calculated Pressure)}}{\text{Design Pressure}}$

[f] Parameter determined in short-term containment analysis (Reference 6.2-35) and not updated based on the long term analysis presented in Reference 6.2-42.

[g] Values are proprietary. See Reference 6.2-42.

Table 6.2-6

Loss-of-Coolant Accident Long-Term
Primary Containment Response Summary

	Case	LPCI and LPCS Pumps	Service Water Pumps	Containment Spray (gal/min)	HPCS (gal/min)	LPCI and LPCS (gal/min)	Peak Pool Temp (°F)	Secondary Peak Pressure (psig)
A	Original rated power 3462 MWt							
	Before 600 seconds	3/1	3	0	6250	21,200/6250	180	7.3
	After 600 seconds	3/1	3	14,134	6250	7067/6250		
B	Original rated power 3462 MWt							
	Before 600 seconds	2/0	2	0	6250	14,134/0	220	13.5
	After 600 seconds	1/0	2	7067	6250	7067/0		
C	Original rated power 3462 MWt							
	Before 600 seconds	2/0	2	0	6250	14,134/0	220	18.3
	After 600 seconds	1/0	2	0	6250	7067/0		
C	Uprated power 3702 MWt							
	Before 600 seconds	2/0	2	0	6250	14,134/0	204.5	14.3
	After 600 seconds	1/0	2	0	6250	7067/0		

Table 6.2-6
Loss-of-Coolant Accident Long-Term
Primary Containment Response (Continued)

	Case	LPCI and LPCS Pumps	Service Water Pumps	Containment Spray (gal/min)	HPCS (gal/min)	LPCI and LPCS (gal/min)	Peak Pool Temp (°F)	Secondary Peak Pressure (psig)
C	Reduced ECCS Flow 3556 MWt							
	Before 600 seconds	2/0	2	0	6250	13,426/0	203.8	15.9
	After 600 seconds	1/0	2	0	6250	6713/0		

Table 6.2-7

Energy Balance for Design Basis
Recirculation Line Break Accident

		Prior to DBA (0 sec)	Time of Peak Pressure Difference Across Drywell Deck	End of Blowdown	Time of Peak [a] Containment Pressure	Unit
1)	Reactor coolant (vessel & pipe inventory)	414.0×10^6	400×10^6	12.2×10^6	$49.4 \times 10^6/44.8 \times 10^6$	Btu
2)	Fuel and cladding					
	Fuel	34.5×10^6	32.3×10^6	12.3×10^6	$4.42 \times 10^6/4.0 \times 10^6$	Btu
	Cladding	3.05×10^6	3.05×10^6	2.99×10^6	$1.07 \times 10^6/0.972 \times 10^6$	Btu
3)	Core internals, also reactor coolant piping, pumps, and valves	91.2×10^6	91.2×10^6	91.2×10^6	$34.0 \times 10^6/57.4 \times 10^6$	Btu
4)	Reactor vessel metal	107×10^6	107×10^6	107×10^6	$40 \times 10^6/66.6 \times 10^6$	Btu
5)	Reactor coolant piping, pumps, and valves	Included in item 3				
6)	Blowdown enthalpy	NA	551	NA	NA	Btu/lbm
7)	Decay heat	0	0.463×10^6	8.8×10^6	$1020 \times 10^6/222 \times 10^6$	Btu
8)	Metal-water reaction heat	0	0	0.01×10^6	$0.471 \times 10^6/0.471 \times 10^6$	Btu
9)	Drywell structures	0	0	0	0	
10)	Drywell air	1.3×10^6	1.6×10^6	0	$1.61 \times 10^6/1.41 \times 10^6$	
11)	Drywell steam	0.759×10^6	7.75×10^6	24.8×10^6	$8.43 \times 10^6/6.06 \times 10^6$	
12)	Containment air	0.951×10^6	0.951×10^6	2.35×10^6	$1.13 \times 10^6/1.24 \times 10^6$	
13)	Containment steam	0.365×10^6	0.365×10^6	1.18×10^6	$6.04 \times 10^6/2.9 \times 10^6$	
14)	Suppression pool water	639×10^6	629×10^6	1040×10^6	$1450 \times 10^6/1200 \times 10^6$	
15)	Heat transferred by heat exchangers	0	0	0	$818 \times 10^6/289 \times 10^6$	

[a] Values given are for minimum ECCS available and for all ECCS available. The information presented in this table is based on the original design basis conditions and represents the general characteristics of the recirculation line break analysis results.

Table 6.2-8

Accident Chronology Design Basis
Recirculation Line Break Accident

	Minimum ECCS Time (sec)	
	Original Rated Power	Uprated Power
1. Vents cleared	0.776	0.709
2. Drywell reaches peak pressure	19.08	11.9
3. Maximum positive differential pressure occurs	0.749	0.600
4. ECCS initiation sequence completed	30	30
5. End of blowdown	53.24	131
6. Vessel reflooded	160	153
7. Introduction of RHR heat exchanger	600	600
8. Containment reaches peak secondary pressure	29,463	25,382

Table 6.2-9a

Reactor Blowdown Data for Recirculation Line Break

Original Rated Power

Time (sec)	Steam Flow (lb/sec)	Liquid Flow (lb/sec)	Steam Enthalpy (Btu/lb)	Liquid Enthalpy (Btu/lb)
0	0	25,690	----	550.73
10.33	0	26,020	----	555.9
19.08	0	25,570	----	548.79
19.12	3679	13,320	1190	550
25.33	3213	8,493	1200.6	502
32.02	2420	4,974	1205.4	446.68
39.05	1494	2,423	1203.13	396.1
45.02	729.2	2,003	1193.79	325.16
53.37	0	0	----	----

Table 6.2-9b

Reactor Blowdown Data for Recirculation Line Break

Uprated Power

Time (sec)	Pressure (psia)[a]	Liquid Flow (lbm)	Steam Flow (lbm)
1.01	1018	3.246E+04	0
5.04	1027	2.625E+04	0
10.23	1039	2.485E+04	31.07
15.04	919	1.161E+04	3112
20.04	774.3	1.180E+04	2404
25.04	641.1	1.076E+04	1985
30.04	533.1	8.849E+03	1759
34.42	433.9	7.179E+03	1559
49.76	205.4	1.162E+04	0
62.26	147.0	9708	0
71.63	122.0	8858	0
81.01	105.6	8306	0
90.38	88.42	7560	0
102.88	71.76	6752	0
112.26	62.71	6369	0
121.63	50.97	5976	0
131.01	42.81	741.6	0

[a] Containment codes assume saturated conditions in vessel.

Table 6.2-10

Reactor Blowdown Data for Main Steam Line Break

Time (sec)	Steam Flow (lb/sec)	Liquid Flow (lb/sec)	Steam Enthalpy (Btu/lb)	Liquid Enthalpy (Btu/lb)
0	8646	0	1190.16	----
4.3	1308	27,480	1190.45	549.66
10.43	2084	24,220	1192.72	540.93
20.43	2843	15,730	1201.0	499.0
30.12	2380	7386	1205.6	432.78
40.21	1110	2734	1197.45	344.32
54.65	0	0	----	----

Table 6.2-11

Core Decay Heat Following Loss-of-Coolant Accident
for Containment Analyses

Time (sec)	Original Rated Power Normalized Core Heat[a]	Uprated Power Normalized Core Heat[b]
0.0	1.0	1.0029
0.9	0.9330	0.7053
2.1	0.7662	0.5468
5.0	0.5005	0.5533
6.93	0.3850	0.4975
9.03	0.2955	0.4119
15.93	0.1491	0.2182
30.0	0.0471	0.07730
10^2	0.0381	0.03436
10^3	0.0223	0.01956
10^4	0.0119	0.01012
10^5	0.00668	0.00546
10^6	0.00267	
3×10^6	0.00190	

[a] A normalized power level of 3462 MWt was used for analyses of original rated power and includes fuel relaxation energy.

[b] A normalized power level of 3702 MWt was used for analyses at uprated power. Uprated power case includes metal water reaction and fuel relaxation energy. The measurement uncertainty recapture project did not change the results obtained from the Uprated Power Normalized Core Heat.

Table 6.2-12

Secondary Containment Design and Performance Data

I. Secondary Containment Design

A. Free volume:

3.5×10^6 ft^3; the entire secondary containment is considered as one volume.

B. Pressure

1. Normal operation:

Vacuum greater than or equal to 0.25 in. of vacuum water gauge as indicated at the reactor building el. 572 ft

2. Postaccident:

Vacuum greater than or equal to 0.25 in. of vacuum water gauge on all building surfaces

C. Infiltration rate during postaccident period:

100% of free volume in a 24-hr period.

D. Exhaust fans (SGT system):

Two independent and redundant filter trains each with two full capacity exhaust fans (see Section 6.5.1)

E. The secondary containment model after a design basis LOCA is discussed in Section 6.2.3.3.1.

Table 6.2-14

Containment Penetrations Subject to Type B Tests

Penetration Number	Type Service	Comments
I. Electrical Penetrations		
X-100 A, B, C, and D	Neutron monitoring	Electrical penetrations are provided with double seals and are separately testable. The test taps and seals are located such that tests of the primary can be conducted without entry into or pressurization of containment
X-101 A, B, C, and D	Control rod position indicator	
X-102 A and B	Thermocouple and RTD	
X-103 A, B, C, and D	Medium voltage power	
X-104 A, B, C, and D	Low voltage power	
X-105 A, B, C, and D	Control and indication	
X-106 C and D	neutron monitoring	
X-107 A and B	Low voltage power control and indication	
II. Personnel And Equipment Access Penetrations		
X-15	Equipment hatch	Separately testable without pressurization of the primary containment.
X-16	Personnel access lock	
X-28	CRD removal hatch	
X-51	Suppression chamber access hatch	
X-1A through 1H	Inspection ports	
X27-A through 27F	TIP drive flanges	
N/A	Drywell head	
X-23	EDR-V-18	Inboard flange
X-24	FDR-V-15	Inboard flange
X-77Aa	RRC-V-19	Inboard & outboard flanges
	RRC-V-20	Inboard flange
X-77Ac	PSR-V-X77A/1	Inboard & outboard flanges
	PSR-V-X77A/2	Inboard flange
X-77Ad	PSR-V-X77A/3	Inboard & outboard flanges
	PSR-V-X77A/4	Inboard flange

Table 6.2-14

Containment Penetrations Subject to Type B Tests
(continued)

	Penetration Number	Type Service	Comments
II.	Personnel And Equipment Access Penetrations (continued)		
	X-3	CEP-V-2A	Inboard flange
	X-53	CSP-V-2	Inboard flange
	X-66	CSP-V-4	Inboard flanges
		CSP-V-5	
	X-67	CSP-V-4A	Inboard flanges
		CSP-V-6	
-	X-119	CSP-V-9	Inboard flange

Table 6.2-16

Primary Containment Isolation Valves

Line Description	Pent	Figure	GDC	Code Gp (12)	Valve EPN	Valve Type	Loc	Pwr to Open (5)	Pwr to Close (5)	Iso sig (9)	Back Up	Norm Pos (10)	SD Pos	Post LOCA	Fail Pos (6)	Valve Size (14)	Close Time (7,11)	Dist to Pent	Leads to ESF	Proc Fld	Leak Bar (13)	Term Zone (13)	Pot Bypass Leak	SBO (62)	Notes
CRD 185 insert lines	9	4.6-5	55	B	--	--	--	--	--		--	--	--	--	--	--	--	--	--	--	--	--	Yes	5	4, 48a
CRD 185 withdrawal lines	10	4.6-5	55	B	--	--	--	--	--		--	--	--	--	--	--	--	--	--	--	--	--	Yes	5	4, 48a
Air line for maintenance	93	6.2-55	56	B	--	Pipe cap	I	--	--	--	--	--	O/C	LC	--	2	--	--	No	A	Cap	SB	No	5	54
All inst lines from pri cont	--	--	56	B	--	EF check	O	Spring	EF			O	O	O	--	1/1.5	--	--	--	--	Vlv	RB	No	5	53
All inst lines from pri cont	--	--	56	B	--	Globe	O	Manual	Manual	--	--	O	O	O	--	1/1.5	--	--	--	--	Vlv	RB	No	5	
All inst lines from RPV	--	--	55	A	--	EF check	O	Spring	EF	--	--	O	O	O	--	.75/1	--	--	--	--	Vlv	RB	No	5	27
All inst lines from RPV	--	--	55	A	--	Globe	O	Manual	Manual	--	--	O	O	O	--	.75/1	--	--	--	--	Vlv	--	No	5	
Deacon soltn return header	95	6.2-59	56	B	--	Pipe cap	O	--	--	--	--	C	C	C	--	.75	--	--	No	W	Cap	RB	No	4	
Deacon soltn supply header	94	6.2-59	56	B	--	Pipe cap	O	--	--	--	--	C	C	C	--	.75	--	--	No	W	Cap	RB	No	4	
Air line WW-DW vac RVs	82e	6.2-41	56	B	CAS-V-730	Globe	O	Manual	Manual	--	--	LC	LC	LC	--	1	--	5	No	A	Vlv	RB	No	5	44, 54
Air line WW-DW vac RVs	82e	6.2-53	56	B	CAS-VX-82e	Globe	O	Manual	Manual	--	--	LC	LC	LC	--	1	--	--	No	A	Vlv	RB	No	5	44, 54
DW vent ex	3	6.2-45	56	B	CEP-V-1A	AO butfy	O	Air	Spring	F,A,Z	RM	C	C	C	C	30	4	12	No	A	Vlv	RB	No	2	56
DW vent ex	3	6.2-45	56	B	CEP-V-1B	AO globe	O	Air	Spring	F,A,Z	RM	C	C	C	C	2	4	12	No	A	Vlv	RB	No	5	56
DW vent ex	3	6.2-45	56	B	CEP-V-2A	AO butfy	O	Air	Spring	F,A,Z	RM	C	C	C	C	30	4	8	No	A	Vlv	RB	No	2	56
DW vent ex	3	6.2-45	56	B	CEP-V-2B	AO globe	O	Air	Spring	F,A,Z	RM	C	C	C	C	2	4	8	No	A	Vlv	RB	No	5	56
WW vent ex	67	6.2-45	56	B	CEP-V-3A	AO butfy	O	Air	Spring	F,A,Z	RM	C	C	C	C	24	4	12	Yes	A	Vlv	RB	No	2	56
RB to WW vac bkrs	67	6.2-45	56	B	CEP-V-3B	AO globe	O	Air	Spring	F,A,Z	RM	C	C	C	C	2	4	12	No	A	Vlv	RB	No	5	56
WW vent ex	67	6.2-45	56	B	CEP-V-4A	AO butfy	O	Air	Spring	F,A,Z	RM	C	C	C	C	24	4	10	No	A	Vlv	RB	No	2	56
RB to WW vac bkrs	67	6.2-45	56	B	CEP-V-4B	AO globe	O	Air	Spring	F,A,Z	RM	C	C	C	C	2	4	10	No	A	Vlv	RB	No	5	56
CIA for SRV accum	56	6.2-38	56	B	CIA-V-20	MO globe	I	ac	ac	41	RM	O	O	O	As is	.75	No	10	No	A	Vlv	RB	Yes	5	56, 52
CIA for SRV accum	56	6.2-38	56	B	CIA-V-21	Check	I	Process	Process	--	--	C	C	C	--	.75			No	A	Vlv	RB	Yes	5	52
CIA line A for ADS accum	89B	6.2-38	56	B	CIA-V-30A	MO globe	I	ac	ac	42	RM	O	O	O	As is	.5	No	15	No	A	Vlv	RB	No	5	56

Table 6.2-16

Primary Containment Isolation Valves (Continued)

Line Description	Pent	Figure	GDC	Code Gp (12)	Valve EPN	Valve Type	Loc	Pwr to Open (5)	Pwr to Close (5)	Iso sig (9)	Back Up	Norm Pos (10)	SD Pos	Post LOCA	Fail Pos (6)	Valve Size (14)	Close Time (7,11)	Dist to Pent	Leads to ESF	Proc Fld	Leak Bar (13)	Term Zone (13)	Pot Bypass Leak	SBO (62)	Notes
CIA line B for ADS accum	91	6.2-38	56	B	CIA-V-30B	MO globe	I	ac	ac	42	RM	O	O	O	As is	.5	No	15	No	A	Vlv	RB	No	5	56
CIA line A for ADS accum	89B	6.2-38	56	B	CIA-V-31A	Check	I	Process	Process	--	--	C	C	C	--	.5	--	--	No	A	Vlv	RB	No	5	
CIA line B for ADS accum	91	6.2-38	56	B	CIA-V-31B	Check	I	Process	Process	--	--	C	C	C	--	.5	--	--	No	A	Vlv	RB	No	5	
DW vent supply	53	6.2-37	56	B	CSP-V-1	AO butfy	O	Air	Spring	F,A,Z	RM	C	C	C	C	30	4	4	No	A	Vlv	RB	Yes	2	56, 52
RB to WW vac bkrs	119	6.2-52	56	B	CSP-V-10	PC check	O	Process	Process	--	RM	C	C	C	--	24	--	4	Yes	A	Vlv	RB	No	3	26, 56
DW vent supply	53	6.2-37	56	B	CSP-V-2	AO butfy	O	Air	Spring	F,A,Z	RM	C	C	C	C	30	4	1	No	A	Vlv	RB	Yes	2	56, 52
WW vent supply	66	6.2-37	56	B	CSP-V-3	AO butfy	O	Air	Spring	F,A,Z	RM	C	C	C	C	24	4	17	No	A	Vlv	RB	Yes	2	56, 52
WW vent supply	66	6.2-37	56	B	CSP-V-4	AO butfy	O	Air	Spring	F,A,Z	RM	C	C	C	C	24	4	14	No	A	Vlv	RB	Yes	2	56, 52
RB to WW vac bkrs	66	6.2-52	56	B	CSP-V-5	AO butfy	O	Spring	Air	40	RM	C	C	C	O	24	No	7	Yes	A	Vlv	RB	No	C	56
RB to WW vac bkrs	67	6.2-45 6.2-52	56	B	CSP-V-6	AO butfy	O	Spring	Air	40	RM	C	C	C	O	24	No	9	Yes	A	Vlv	RB	No	C	56
RB to WW vac bkrs	66	6.2-52	56	B	CSP-V-7	PC check	O	Process	Process	--	RM	C	C	C	--	24	--	10	Yes	A	Vlv	RB	No	3	26, 56
RB to WW vac bkrs	67	6.2-45 6.2-52	56	B	CSP-V-8	PC check	O	Process	Process	--	RM	C	C	C	--	24	--	16	Yes	A	Vlv	RB	No	3	26, 56
RB to WW vac bkrs	119	6.2-52	56	B	CSP-V-9	AO butfy	O	Spring	Air	40	RM	C	C	C	O	24	No	1	Yes	A	Vlv	RB	No	C	56
RB to WW vac bkrs and vent supply	66	6.2-37	56	B	CSP-V-93	SO globe	O	ac	Spring	F,A,Z	RM	C	C	C	C	1	4	4	No	A	Vlv	RW	Yes	5	52, 56
DW vent supply	53	6.2-37	56	B	CSP-V-96	SO globe	O	ac	Spring	F,A,Z	RM	C	C	C	C	1	4	3	No	A	Vlv	RW	Yes	5	52, 56
DW vent supply	53	6.2-37	56	B	CSP-V-97	SO globe	O	ac	Spring	F,A,Z	RM	C	C	C	C	1	4	5	No	A	Vlv	RB	Yes	5	52, 56
RB to WW vac bkrs and vent supply	66	6.2-37	56	B	CSP-V-98	SO globe	O	ac	Spring	F,A,Z	RM	C	C	C	C	1	4	6	No	A	Vlv	RB	Yes	5	52, 56
DW service line	92	6.2-47	56	B	DW-V-156	Gate	O	Manual	Manual	--	--	LC	LC	LC	--	2	--	5	No	W	Vlv	SB	Yes	5	
DW service line	92	6.2-47	56	B	DW-V-157	Gate	I	Manual	Manual	--	--	LC	LC	LC	--	2	--	--	No	W	Vlv	SB	Yes	5	
Drywell equip drain	23	6.2-46	56	B	EDR-V-19	AO gate	O	Air	Spring	F,A	RM	O	O	C	C	3	Std	2	No	W	Vlv	RB	No	2	56
Drywell equip drain	23	6.2-46	56	B	EDR-V-20	AO gate	O	Air	Spring	F,A	RM	O	O	C	C	3	Std	4	No	W	Vlv	RB	No	2	56
Drywell floor drain	24	6.2-46	56	B	FDR-V-3	AO butfy	O	Air	Spring	F,A	RM	O	O	C	C	3	Std	2	No	W	Vlv	RB	No	2	56
Drywell floor drain	24	6.2-46	56	B	FDR-V-4	AO butfy	O	Air	Spring	F,A	RM	O	O	C	C	3	Std	3	No	W	Vlv	RB	No	2	56
SP pool cleanup return	101	6.2-50	56	B	FPC-V-149	MO gate	O	ac	ac	F,A	RM	C	C	C	As is	6	35	41	No	W	Vlv	RB	Yes	P	48a, 56
SP pool cleanup suction	100	6.2-44	56	B	FPC-V-153	MO gate	O	ac	ac	F,A	RM	C	C	C	As is	6	35	2	No	W	Vlv	RB	Yes	P	48a, 56

Table 6.2-16

Primary Containment Isolation Valves (Continued)

Line Description	Pent	Figure	GDC	Code Gp (12)	Valve EPN	Valve Type	Loc	Pwr to Open (5)	Pwr to Close (5)	Iso sig (9)	Back Up	Norm Pos (10)	SD Pos	Post LOCA	Fail Pos (6)	Valve Size (14)	Close Time (7,11)	Dist to Pent	Leads to ESF	Proc Fld	Leak Bar (13)	Term Zone (13)	Pot Bypass Leak	SBO (62)	Notes
SP pool cleanup suction	100	6.2-44	56	B	FPC-V-154	MO gate	O	ac	ac	F,A	RM	C	C	C	As is	6	35	7	No	W	Vlv	RB	Yes	M	48a, 56
SP pool cleanup return	101	6.2-50	56	B	FPC-V-156	MO gate	O	ac	ac	F,A	RM	C	C	C	As is	6	35	3	No	W	Vlv	RB	Yes	M	56, 48a
HPCS suction relief	49	6.2-41	56	B	HPCS-RV-14	Relief	O	pp	Spring	--	--	C	C	C	--	1	--	65	Yes	W	Vlv	RB	No	5	19, 18, 48a
HPCS discharge	49	6.2-41	56	B	HPCS-RV-35	Relief	O	pp	Spring	--	--	C	C	C	--	2	--	70	Yes	W	Vlv	RB	No	5	19, 18, 48a
HPCS min flow	49	6.2-41	56	B	HPCS-V-12	MO gate	O	ac	ac	38	RM	C	C	O/C	As is	4	20	53	Yes	W	Vlv	RB	No	H	56, 18, 66
HPCS suction from SP	31	6.2-49	56	B	HPCS-V-15	MO gate	O	ac	ac	46	Manual	C	C	O/C	As is	18	18	3	Yes	W	Vlv	RB	No	H	48a, 56, 18
HPCS test line	49	6.2-41	56	B	HPCS-V-23	MO globe	O	ac	ac	F,A	RM	C	C	C	As is	12	Std	6	Yes	W	Vlv	RB	No	H	56, 18, 66
HPCS to RPV	6	6.2-47	55	A	HPCS-V-4	MO gate	O	ac	ac	46	Manual	C	C	O/C	As is	12	17	9	Yes	W	Vlv	RB	No	C	56, 48b, 18
HPCS to RPV	6	6.2-47	55	A	HPCS-V-5	Check	I	Process	Process	--	--	C	C	O/C	--	12	--	--	Yes	W	Vlv	RB	No	3	3, 48b, 18
Air line for HPCS-V-5	78e	6.2-53	56	B	HPCS-V-65	Globe	O	Manual	Manual	--	--	LC	LC	LC	--	1	--	7	No	A	Vlv	RB	No	5	
Air line for HPCS-V-5	78e	6.2-53	56	B	HPCS-V-68	Globe	O	Manual	Manual		--	LC	LC	LC	--	1	--	7	No	A	Vlv	RB	No	5	
LPCS min flow	63	6.2-41	56	B	LPCS-FCV-11	MO globe	O	ac	ac	38	RM	C	C	O/C	As is	3	No	87	Yes	W	Vlv	RB	No	N	56, 66, 18
LPCS discharge RV	63	6.2-41	56	B	LPCS-RV-18	Relief	O	pp	Spring	--	--	C	C	C	--	2	--	50	Yes	W	Vlv	RB	No	5	19, 18, 48a
LPCS suction RV	63	6.2-41	56	B	LPCS-RV-31	Relief	O	pp	Spring	--	--	C	C	C	--	1	--	25	Yes	W	Vlv	RB	No	5	19, 18, 48a
LPCS pump suction	34	6.2-49	56	B	LPCS-V-1	MO gate	O	ac	ac	46	Manual	O	O	O/C	As is	24	No	2	Yes	W	Vlv	RB	No	L	48a, 56, 18
LPCS test line	63	6.2-41	56	B	LPCS-V-12	MO globe	O	ac	ac	F,V	RM	C	C	C	As is	12	Std	4	Yes	W	Vlv	RB	No	N	18, 56, 58, 66
LPCS to RPV	8	6.2-47	55	A	LPCS-V-5	MO gate	O	ac	ac	46	Manual	C	C	O/C	As is	12	27	22	Yes	W	Vlv	RB	No	C	56,48b, 18, 58
LPCS to RPV	8	6.2-47	55	A	LPCS-V-6	Check	I	Process	Process	--	--	C	C	O/C	--	12	--	--	Yes	W	Vlv	RB	No	3	3, 48b, 18, 58
Air line for LPCS-V-6	78d	6.2-53	56	B	LPCS-V-66	Globe	O	Manual	Manual	--	--	LC	LC	LC	--	1	--	7	No	A	Vlv	RB	No	5	
Air line for LPCS-V-6	78d	6.2-53	56	B	LPCS-V-67	Globe	O	Manual	Manual	--	--	LC	LC	LC	--	1	--	7	No	A	Vlv	RB	No	5	
MS lines drain inboard	22	6.2-41	55	A	MS-V-16	MO gate	I	ac	ac	V,G, D,P	RM	C	C	C	As is	3	25	--	No	S	Vlv	TB	Yes	M	52, 56, 15
Hardened Containment Vent	58	6.2-60A	56	B	HCV-V-1	AO butfy	O	Air	Spring	--	RM	C	C	C	C	16	--	33	No	A,S	Vlv	RBx	Yes	2	16, 17
Hardened Containment Vent	58	6.2-60A	56	B	HCV-V-2	AO butfy	O	Air	Spring	--	RM	C	C	C	C	16	--	68	No	A,S	Vlv	RBx	Yes	2	16, 17

Table 6.2-16

Primary Containment Isolation Valves (Continued)

Line Description	Pent	Figure	GDC	Code Gp (12)	Valve EPN	Valve Type	Loc	Pwr to Open (5)	Pwr to Close (5)	Iso sig (9)	Back Up	Norm Pos (10)	SD Pos	Post LOCA	Fail Pos (6)	Valve Size (14)	Close Time (7,11)	Dist to Pent	Leads to ESF	Proc Fld	Leak Bar (13)	Term Zone (13)	Pot Bypass Leak	SBO (62)	Notes
MS lines drain outboard	22	6.2-41	55	A	MS-V-19	MO gate	O	dc	dc	V,G, D,P	RM	C	C	C	As is	3	25	6	No	S	Vlv	TB	Yes	N	52, 56, 15
MS line A inboard MSIV	18A	6.2-45	55	A	MS-V-22A	AO globe	I	Air	Air/sp	V,G, D,P	RM	O	O/C	C	C	26	3-5	--	No	S	Vlv	TB	Yes	2	1, 15, 56, 63
MS line B inboard MSIV	18B	6.2-45	55	A	MS-V-22B	AO globe	I	Air	Air/sp	V,G, D,P	RM	O	O/C	C	C	26	3-5	--	No	S	Vlv	TB	Yes	2	1, 15, 56, 63
MS line C inboard MSIV	18C	6.2-45	55	A	MS-V-22C	AO globe	I	Air	Air/sp	V,G, D,P	RM	O	O/C	C	C	26	3-5	--	No	S	Vlv	TB	Yes	2	1, 15, 56, 63
MS line D inboard MSIV	18D	6.2-45	55	A	MS-V-22D	AO globe	I	Air	Air/sp	V,G, D,P	RM	O	O/C	C	C	26	3-5	--	No	S	Vlv	TB	Yes	2	1, 15, 56, 63
MS line A outboard MSIV	18A	6.2-45	55	A	MS-V-28A	AO globe	O	Air	Air/sp	V,G, D,P	RM	O	O/C	C	C	26	3-5	4	No	S	Vlv	TB	Yes	2	1, 15, 56, 63
MS line B outboard MSIV	18B	6.2-45	55	A	MS-V-28B	AO globe	O	Air	Air/sp	V,G, D,P	RM	O	O/C	C	C	26	3-5	4	No	S	Vlv	TB	Yes	2	1, 15, 56, 63
MS line C outboard MSIV	18C	6.2-45	55	A	MS-V-28C	AO globe	O	Air	Air/sp	V,G, D,P	RM	O	O/C	C	C	26	3-5	4	No	S	Vlv	TB	Yes	2	1, 15, 56, 63
MS line D outboard MSIV	18D	6.2-45	55	A	MS-V-28D	AO globe	O	Air	Air/sp	V,G, D,P	RM	O	O/C	C	C	26	3-5	4	No	S	Vlv	TB	Yes	2	1, 15, 56, 63
MS line A drain isolation	18A	6.2-45	55	A	MS-V-67A	MO gate	O	ac	ac	V,G, D,P	RM	C	C	C	As is	1.5	15	5	No	S	Vlv	TB	Yes	5	15, 56, 63
MS line B drain isolation	18B	6.2-45	55	A	MS-V-67B	MO gate	O	ac	ac	V,G, D,P	RM	C	C	C	As is	1.5	15	5	No	S	Vlv	TB	Yes	5	15, 56, 63
MS line C drain isolation	18C	6.2-45	55	A	MS-V-67C	MO gate	O	ac	ac	V,G, D,P	RM	C	C	C	As is	1.5	15	5	No	S	Vlv	TB	Yes	5	15, 56, 63
MS line D drain isolation	18D	6.2-45	55	A	MS-V-67D	MO gate	O	ac	ac	V,G, D,P	RM	C	C	C	As is	1.5	15	5	No	S	Vlv	TB	Yes	5	15, 56, 63
MS line A loop isolation	18A	6.2-45	55	A	MSLC-V-3A	Gate	O	Manual	Manual	--	--	C	C	C	--	1.5	--	10	No	S	Vlv	RB	Yes	5	63
MS line B loop isolation	18B	6.2-45	55	A	MSLC-V-3B	Gate	O	Manual	Manual	--	--	C	C	C	--	1.5	--	10	No	S	Vlv	RB	Yes	5	63
MS line C loop isolation	18C	6.2-45	55	A	MSLC-V-3C	Gate	O	Manual	Manual	--	--	C	C	C	--	1.5	--	10	No	S	Vlv	RB	Yes	5	63
MS line D loop isolation	18D	6.2-45	55	A	MSLC-V-3D	Gate	O	Manual	Manual	--	--	C	C	C	--	1.5	--	10	No	S	Vlv	RB	Yes	5	63
Decon soltn supply header	94	6.2-59	56	B	MWR-V-124	Globe	O	Manual	Manual	--	--	LC	LC	LC	--	.75	--	--	No	W	Cap	RB	No	5	

Table 6.2-16

Primary Containment Isolation Valves (Continued)

Line Description	Pent	Figure	GDC	Code Gp (12)	Valve EPN	Valve Type	Loc	Pwr to Open (5)	Pwr to Close (5)	Iso sig (9)	Back Up	Norm Pos (10)	SD Pos	Post LOCA	Fail Pos (6)	Valve Size (14)	Close Time (7,11)	Dist to Pent	Leads to ESF	Proc Fld	Leak Bar (13)	Term Zone (13)	Pot Bypass Leak	SBO (62)	Notes
Decon soltn return header	95	6.2-59	56	B	MWR-V-125	Globe	O	Manual	Manual	--	--	LC	LC	LC	--	.75	--	--	No	W	Cap	RB	No	5	
Rad mon return (S-SR-20)	72f	6.2-54	56	B	PI-V-X72f/l	Check	I	Process	Process	--	--	O	O	C	--	1	--	--	No	A	Vlv	RB	No	5	
Rad mon return (S-SS-21)	73e	6.2-54	56	B	PI-V-X73E/1	Check	I	Process	Process	--	--	O	O	C	--	1	--	--	No	A	Vlv	RB	No	5	
Inst lines - H2 to cont	42c	9.4-8	56	B	PI-EFC-X42C	EF check	O	Spring	EF	--	--	O	O	O	--	1	--	--	Yes	A, S	Vlv	RB	No	5	53
Inst lines - H2 to cont	78a	9.4-8	56	B	PI-EFC-X78A	EF check	O	Spring	EF	--	--	O	O	O	--	1	--	--	Yes	A, S	Vlv	RB	No	5	53
Inst lines - H2 to cont	42c	9.4-8	56	B	PI-V-X42C	Globe	O	Manual	Manual	--	--	O	O	O	--	1	--	--	Yes	A, S	Vlv	RB	No	5	53
Inst lines - H2 fm cont	72c	9.4-8	56	B	PI-V-X72C	Globe	O	Manual	Manual	--	--	O	O	O	--	1					Vlv		No	5	
Inst lines - H2 fm cont	72d	9.4-8	56	B	PI-V-X72D	Globe	O	Manual	Manual	--	--	O	O	O	--	1					Vlv		No	5	
Inst lines - H2 fm cont	72e	9.4-8	56	B	PI-V-X72E	Globe	O	Manual	Manual	--	--	O	O	O	--	1					Vlv		No	5	
Inst lines - H2 fm cont	73c	9.4-8	56	B	PI-V-X73C	Globe	O	Manual	Manual	--	--	O	O	O	--	1					Vlv		No	5	
Inst lines - H2 fm cont	73d	9.4-8	56	B	PI-V-X73D	Globe	O	Manual	Manual	--	--	O	O	O	--	1					Vlv		No	5	
Inst lines - H2 to cont	78a	9.4-8	56	B	PI-V-X78A	Globe	O	Manual	Manual	--	--	O	O	O	--	1	--	--	Yes	A, S	Vlv	RB	No	5	53
Inst lines - H2 fm cont	82c	9.4-8	56	B	PI-V-X82C	Globe	O	Manual	Manual	--	--	O	O	O	--	1					Vlv		No	5	
Inst lines - H2 fm cont	84b	9.4-8	56	B	PI-V-X84B	Globe	O	Manual	Manual	--	--	O	O	O	--	1					Vlv		No	5	
Air line for RHR-V-50A	42d	6.2-53	56	B	PI-VX-216	Globe	O	Manual	Manual	--	--	LC	LC	LC	--	1	--	7	No	A	Vlv	RB	No	5	
Air line for RHR-V-41B	54Bf	6.2-53	56	B	PI-VX-218	Globe	O	Manual	Manual	--	--	LC	LC	LC	--	1	--	7	No	A	Vlv	RB	No	5	
Air line for RHR-V-41A	61f	6.2-53	56	B	PI-VX-219	Globe	O	Manual	Manual	--	--	LC	LC	LC	--	1	--	7	No	A	Vlv	RB	No	5	
Air line for RHR-V-41C	62f	6.2-53	56	B	PI-VX-220	Globe	O	Manual	Manual	--	--	LC	LC	LC	--	1	--	7	No	A	Vlv	RB	No	5	
Air line for RHR-V-50B	69c	6.2-53	56	B	PI-VX-221	Globe	O	Manual	Manual	--	--	LC	LC	LC	--	1	--	7	No	A	Vlv	RB	No	5	
Rad mon supply (S-SR-20)	85a/c	6.2-54	56	B	PI-VX-250	SO globe	O	ac	Spring	F,A	RM	O	O	C	C	1	5	--	No	A	Vlv	RB	No	5	56
Rad mon supply (S-SR-20)	85a/c	6.2-54	56	B	PI-VX-251	SO globe	O	ac	Spring	F,A	RM	O	O	C	C	1	5	--	No	A	Vlv	RB	No	5	56
Rad mon return (S-SR-20)	72f	6.2-54	56	B	PI-VX-253	SO globe	O	ac	Spring	F,A	RM	O	O	C	C	1	5	--	No	A	Vlv	RB	No	5	56

Table 6.2-16

Primary Containment Isolation Valves (Continued)

Line Description	Pent	Figure	GDC	Code Gp (12)	Valve EPN	Valve Type	Loc	Pwr to Open (5)	Pwr to Close (5)	Iso sig (9)	Back Up	Norm Pos (10)	SD Pos	Post LOCA	Fail Pos (6)	Valve Size (14)	Close Time (7,11)	Dist to Pent	Leads to ESF	Proc Fld	Leak Bar (13)	Term Zone (13)	Pot Bypass Leak	SBO (62)	Notes
Rad mon return (S-SR-21)	29a/c	6.2-54	56	B	PI-VX-256	SO globe	O	ac	Spring	F,A	RM	O	O	C	C	1	5	--	No	A	Vlv	RB	No	5	56
Rad mon return (S-SR-21)	29a/c	6.2-54	56	B	PI-VX-257	SO globe	O	ac	Spring	F,A	RM	O	O	C	C	1	5	--	No	A	Vlv	RB	No	5	56
Rad mon return (S-SR-21)	73e	6.2-54	56	B	PI-VX-259	SO globe	O	ac	Spring	F,A	RM	O	O	C	C	1	5	--	No	A	Vlv	RB	No	5	56
Inst lines - H2 fm cont	72c	9.4-8	56	B	PI-VX-262	SO globe	O	ac	Spring	--	RM	O	O	O	C	1	NA	--	Yes	A, S	Vlv	RB	No	5	53
Inst lines - H2 fm cont	72d	9.4-8	56	B	PI-VX-263	SO globe	O	ac	Spring	--	RM	O	O	O	C	1	NA	--	Yes	A, S	Vlv	RB	No	5	53
Inst lines - H2 fm cont	72e	9.4-8	56	B	PI-VX-264	SO globe	O	ac	Spring	--	RM	O	O	O	C	1	NA	--	Yes	A, S	Vlv	RB	No	5	53
Inst lines - H2 fm cont	82c	9.4-8	56	B	PI-VX-265	SO globe	O	ac	Spring	--	RM	O	O	O	C	1	NA	--	Yes	A, S	Vlv	RB	No	5	53
Inst lines - H2 fm cont	73c	9.4-8	56	B	PI-VX-266	SO globe	O	ac	Spring	--	RM	O	O	O	C	1	NA	--	Yes	A, S	Vlv	RB	No	5	53
Inst lines - H2 fm cont	73d	9.4-8	56	B	PI-VX-268	SO globe	O	ac	Spring	--	RM	O	O	O	C	1	NA	--	Yes	A, S	Vlv	RB	No	5	53
Inst lines - H2 fm cont	84b	9.4-8	56	B	PI-VX-269	SO globe	O	ac	Spring	--	RM	O	O	O	C	1	NA	--	Yes	A, S	Vlv	RB	No	5	53
Air line for RHR-V-50A	42d	6.2-53	56	B	PI-VX-42d	Globe	O	Manual	Manual	--	--	LC	LC	LC	--	1	--	7	No	A	Vlv	RB	No	5	
Air line for RHR-V-41B	54Bf	6.2-53	56	B	PI-VX-54Bf	Globe	O	Manual	Manual	--	--	LC	LC	LC	--	1	--	7	No	A	Vlv	RB	No	5	
Air line for RHR-V-41A	61f	6.2-53	56	B	PI-VX-61f	Globe	O	Manual	Manual	--	--	LC	LC	LC	--	1	--	7	No	A	Vlv	RB	No	5	
Air line for RHR-V-41C	62f	6.2-53	56	B	PI-VX-62f	Globe	O	Manual	Manual	--	--	LC	LC	LC	--	1	--	7	No	A	Vlv	RB	No	5	
Air line for RHR-V-50B	69c	6.2-53	56	B	PI-VX-69c	Globe	O	Manual	Manual	--	--	LC	LC	LC	--	1	--	7	No	A	Vlv	RB	No	5	
PASS DW atm	73f	6.2-57	56	B	PSR-V-X73-1	SO globe	I	ac	Spring	--	RM	C	C	O	C	1	No	--	No	A	Vlv	RW	Yes	5	50, 56, 52
PASS DW atm	73f	6.2-57	56	B	PSR-V-X73-2	SO globe	O	ac	Spring	--	RM	C	C	O	C	1	No	--	No	A	Vlv	RW	Yes	5	50, 56, 52
PASS jet pump #10	77Ac	6.2-57	55	A	PSR-V-X77A1	SO globe	I	ac	Spring	--	RM	C	C	O	C	1	No	--	No	W	Vlv	RW	Yes	5	50, 56, 48a
PASS jet pump #10	77Ac	6.2-57	55	A	PSR-V-X77A2	SO globe	O	ac	Spring	--	RM	C	C	O	C	1	No	--	No	W	Vlv	RW	Yes	5	50, 56, 48a
PASS jet pump #20	77Ad	6.2-57	55	A	PSR-V-X77A3	SO globe	I	ac	Spring	--	RM	C	C	O	C	1	No	--	No	W	Vlv	RW	Yes	5	50, 56, 48a
PASS jet pump #20	77Ad	6.2-57	55	A	PSR-V-X77A4	SO globe	O	ac	Spring	--	RM	C	C	O	C	1	No	--	No	W	Vlv	RW	Yes	5	50, 56, 48a

Table 6.2-16

Primary Containment Isolation Valves (Continued)

Line Description	Pent	Figure	GDC	Code Gp (12)	Valve EPN	Valve Type	Loc	Pwr to Open (5)	Pwr to Close (5)	Iso sig (9)	Back Up	Norm Pos (10)	SD Pos	Post LOCA	Fail Pos (6)	Valve Size (14)	Close Time (7,11)	Dist to Pent	Leads to ESF	Proc Fld	Leak Bar (13)	Term Zone (13)	Pot Bypass Leak	SBO (62)	Notes
PASS DW atm	80b	6.2-57	56	B	PSR-V-X80-1	SO globe	I	ac	Spring	--	RM	C	C	O	C	1	No	--	No	A	Vlv	RW	Yes	5	50, 56, 52
PASS DW atm	80b	6.2-57	56	B	PSR-V-X80-2	SO globe	O	ac	Spring	--	RM	C	C	O	C	1	No	--	No	A	Vlv	RW	Yes	5	50, 56, 52
PASS SP return	82d	6.2-58	56	B	PSR-V-X82-1	SO globe	O	ac	Spring	--	RM	C	C	O	C	1	No	--	No	W	Vlv	RW	Yes	5	50, 48a 56
PASS SP return	82d	6.2-58	56	B	PSR-V-X82-2	SO globe	O	ac	Spring	--	RM	C	C	O	C	1	No	--	No	A	Vlv	RW	Yes	5	50, 56, 48a
PASS WW atm return	82f	6.2-58	56	B	PSR-V-X82-7	SO globe	O	ac	Spring	--	RM	C	C	O	C	1	No	--	No	A	Vlv	RW	Yes	5	50, 56, 52
PASS WW atm return	82f	6.2-58	56	B	PSR-V-X82-8	SO globe	O	ac	Spring	--	RM	C	C	O	C	1	No	--	No	A	Vlv	RW	Yes	5	50, 56, 52
PASS WW atm	83a	6.2-58	56	B	PSR-V-X83-1	SO globe	O	ac	Spring	--	RM	C	C	O	C	1	No	--	No	A	Vlv	RW	Yes	5	50, 56, 52
PASS WW atm	83a	6.2-58	56	B	PSR-V-X83-2	SO globe	O	ac	Spring	--	RM	C	C	O	C	1	No	--	No	A	Vlv	RW	Yes	5	50, 56, 52
PASS WW atm	84f	6.2-58	56	B	PSR-V-X84-1	SO globe	O	ac	Spring	--	RM	C	C	O	C	1	No	--	No	A	Vlv	RW	Yes	5	50, 56, 52
PASS WW atm	84f	6.2-58	56	B	PSR-V-X84-2	SO globe	O	ac	Spring	--	RM	C	C	O	C	1	No	--	No	A	Vlv	RW	Yes	5	50, 56, 52
PASS line SP	88	6.2-58	56	B	PSR-V-X88-1	SO globe	O	ac	Spring	--	RM	C	C	O	C	1	No	--	No	W	Vlv	RW	Yes	5	48a, 50, 56, 64
PASS line SP	88	6.2-58	56	B	PSR-V-X88-2	SO globe	O	ac	Spring	--	RM	C	C	O	C	1	No	--	No	W	Vlv	RW	Yes	5	50, 56, 64, 48a
RCC inlet header	5	6.2-55	56	B	RCC-V-104	MO gate	O	ac	ac	F,A	--	O	O	C	As is	10	60	5	No	W	Vlv	RB	Yes	4	56
RCC outlet header	46	6.2-50	56	B	RCC-V-21	MO gate	O	ac	ac	F,A	--	O	O	C	As is	10	60	3	No	W	Vlv	RB	No	4	56
RCC outlet header	46	6.2-50	56	B	RCC-V-40	MO gate	I	ac	ac	F,A	--	O	O	C	As is	10	60	--	No	W	Vlv	RB	No	4	56
RCC outlet header	46	6.2-50	56	B	RCC-V-219	Check	I	Process	Process	--	--	C	C	C	--	0.5	--	--	No	W	Vlv	RB	No	3	
RCC inlet header	5	6.2-55	56	B	RCC-V-5	MO gate	O	ac	ac	F,A	--	O	O	C	As is	10	60	3	No	W	Vlv	RB	Yes	4	56
RPV head spray	2	6.2-40	55	A	RCIC-V-13	MO gate	O	dc	dc	34	RM	C	O/C	O/C	As is	6	15	21	No	W	Vlv	RB	No	C	56, 48b, 18
Air line - spare	54Aa	6.2-53	56	B	RCIC-V-184	Globe	O	Manual	Manual	--	--	LC	LC	LC	--	1	--	7	No	W	Vlv	RB	No	5	
RCIC min flow	65	6.2-43	56	B	RCIC-V-19	MO globe	O	dc	dc	33	RM	C	C	O/C	As is	2	22	7	No	W	Vlv	RB	No	5	22, 56, 18, 66

Table 6.2-16

Primary Containment Isolation Valves (Continued)

Line Description	Pent	Figure	GDC	Code Gp (12)	Valve EPN	Valve Type	Loc	Pwr to Open (5)	Pwr to Close (5)	Iso sig (9)	Back Up	Norm Pos (10)	SD Pos	Post LOCA	Fail Pos (6)	Valve Size (14)	Close Time (7,11)	Dist to Pent	Leads to ESF	Proc Fld	Leak Bar (13)	Term Zone (13)	Pot Bypass Leak	SBO (62)	Notes
RCIC vac pump dis	64	6.2-52	56	B	RCIC-V-28	Check	O	Process	Process	--	--	C	O	O/C	--	1.5	--	5	No	W	Vlv	RB	No	5	18, 66
RCIC suct from SP	33	6.2-49	56	B	RCIC-V-31	MO gate	O	dc	dc	32	RM	C	O	O/C	As is	8	No	2	No	W	Vlv	RB	No	N	48a, 56, 18
RCIC turb ex and ex vacuum breaker	4/116	6.2-58	56	B	RCIC-V-40	Check	O	Process	Process	--	--	O	C	O/C	--	10	--	17	No	S	Vlv	RB	No	3	49
RCIC turb steam supply	21/45	6.2-40	55	A	RCIC-V-63	MO gate	I	ac	ac	K	RM	O	O/C	O/C	As is	10	16	--	Yes	S	Vlv	RB	Yes	M	51, 56, 52
RHR cond mode steam supply	21	6.2-40	55	A	RCIC-V-64	MO gate	O	Manual	Manual	--	--	LC	LC	LC	As is	10	--	2	Yes	S	Vlv	RB	No	1	39
RPV head spray	2	6.2-40	55	A	RCIC-V-66	Check	I	Process	Process	--	--	C	O	O/C	--	6	--	--	No	W	Vlv	RB	No	3	48b, 18
RCIC turb ex and ex vacuum breaker	4/116	6.2-58	56	B	RCIC-V-68	MO gate	O	dc	dc	35	RM	O	O	O/C	As is	10	No	10	No	S	Vlv	RB	No	C	22, 56
RCIC vacuum pump dis	64	6.2-52	56	B	RCIC-V-69	MO gate	O	dc	dc	36	RM	O	O	O/C	As is	1.5	No	3	No	W	Vlv	RB	No	5	22, 56, 18, 66
Air line - spare	54Aa	6.2-53	56	B	RCIC-V-740	Globe	O	Manual	Manual	--	--	LC	LC	LC	--	1	--	7	No	A	Vlv	RB	No	5	
RPV head spray	2	6.2-40	55	A	RCIC-V-742	Globe	O	Manual	Manual	--	--	LC	LC	LC	--	0.75	--	3	No	W	Vlv	RB	No	5	48b
RCIC steam supply bypass	21/45	6.2-40	55	A	RCIC-V-76	MO globe	I	ac	ac	K	RM	C	C	C	As is	1	22	--	No	S	Vlv	RB	Yes	5	56, 52
RCIC turbine steam supply	45	6.2-40	55	A	RCIC-V-8	MO gate	O	dc	dc	K	RM	O	O/C	O/C	As is	4	26	2	No	S	Vlv	RB	Yes	P	51, 56, 52
RFW line A	17A	6.2-37	55	A	RFW-V-10A	Check	I	Process	Process	--	--	O	O/C	O/C	--	24	--	--	No	W	Vlv	TB	Yes	3	16, 52, 31
RFW line B	17B	6.2-37	55	A	RFW-V-10B	Check	I	Process	Process	--	--	O	O/C	O/C	--	24	--	--	No	W	Vlv	TB	Yes	3	16, 52, 31
RFW line A	17A	6.2-37	55	A	RFW-V-32A	PC check	O	Process	Process/ spring	--	--	O	O/C	O/C	--	24	--	2	No	W	Vlv	TB	Yes	3	52, 31
RFW line B	17B	6.2-37	55	A	RFW-V-32B	PC check	O	Process	Process/ spring	--	--	O	O/C	O/C	--	24	--	2	No	W	Vlv	TB	Yes	3	52, 31
RFW line A	17A	6.2-37	55	A	RFW-V-65A	MO gate	O	ac	ac	31	Manual	O	O/C	O/C	As is	24	No	8	No	W	Vlv	TB	Yes	C	56, 52, 31
RFW line B	17B	6.2-37	55	A	RFW-V-65B	MO gate	O	ac	ac	31	Manual	O	O/C	O/C	As is	24	No	8	No	W	Vlv	TB	Yes	C	56, 52, 31
Pump min flow	47	6.2-51	56	B	RHR-FCV-64A	MO globe	O	ac	ac	38	RM	C	C	O/C	As is	3	20	22	Yes	W	Vlv	RB	No	L	18, 56, 66
Pump min flow	48	6.2-51	56	B	RHR-FCV-64B	MO globe	O	ac	ac	38	RM	C	C	O/C	As is	3	20	22	Yes	W	Vlv	RB	No	L	18, 56, 66

Table 6.2-16

Primary Containment Isolation Valves (Continued)

Line Description	Pent	Figure	GDC	Code Gp (12)	Valve EPN	Valve Type	Loc	Pwr to Open (5)	Pwr to Close (5)	Iso sig (9)	Back Up	Norm Pos (10)	SD Pos	Post LOCA	Fail Pos (6)	Valve Size (14)	Close Time (7,11)	Dist to Pent	Leads to ESF	Proc Fld	Leak Bar (13)	Term Zone (13)	Pot Bypass Leak	SBO (62)	Notes
Pump min flow	26	6.2-41	56	B	RHR-FCV-64C	MO globe	O	ac	ac	38	RM	C	C	O/C	As is	3	20	30	Yes	W	Vlv	RB	No	L	18, 56, 66
Heat exch thermal RV	117	6.2-39	56	B	RHR-RV-1A	Relief	O	pp	Spring	--	--	C	C	C	--	.75	--	188	No	W	Vlv	RB	No	5	18, 19, 48a
Heat exch thermal RV	118	6.2-39	56	B	RHR-RV-1B	Relief	O	pp	Spring	--	--	C	C	C	--	.75	--	189	No	W	Vlv	RB	No	5	18, 19, 48a
Discharge header RV	47	6.2-51	56	B	RHR-RV-25A	Relief	O	pp	Spring	--	--	C	C	C	--	1	--	33	Yes	W	Vlv	RB	No	5	18, 19, 48a
Discharge header RV	48	6.2-51	56	B	RHR-RV-25B	Relief	O	pp	Spring	--	--	C	C	C	--	1	--	30	Yes	W	Vlv	RB	No	5	18, 19, 48a
Discharge header RV	26	6.2-41	56	B	RHR-RV-25C	Relief	O	pp	Spring	--	--	C	C	C	--	1	--	30	Yes	W	Vlv	RB	No	5	18, 19, 48a
Flush line RV	118	6.2-39	56	B	RHR-RV-30	Relief	O	pp	Spring	--	--	C	C	C	--	.75	--	34	No	W	Vlv	RB	No	5	18, 19, 48a
Pump A and B suction RV	48	6.2-51	56	B	RHR-RV-5	Relief	O	pp	Spring	--	--	C	C	C	--	1	--	20	Yes	W	Vlv	RB	No	5	18, 19, 48a
Pump A suction RV	47	6.2-51	56	B	RHR-RV-88A	Relief	O	pp	Spring	--	--	C	C	C	--	.75	--	30	Yes	W	Vlv	RB	No	5	18, 48a
Pump B suction RV	48	6.2-51	56	B	RHR-RV-88B	Relief	O	pp	Spring	--	--	C	C	C	--	.75	--	30	Yes	W	Vlv	RB	No	5	18, 48a
Pump C suction RV	26	6.2-41	56	B	RHR-RV-88C	Relief	O	pp	Spring	--	--	C	C	C	--	.75	--	37	Yes	W	Vlv	RB	No	5	18, 19, 48a
Heat exch cond	47	6.2-51	56	B	RHR-V-11A	MO gate	O	Manual	Manual	--	--	LC	LC	LC	As is	4	--	18	Yes	W	Vlv	RB	No	1	18, 39, 66
Heat exch cond	48	6.2-51	56	B	RHR-V-11B	MO gate	O	Manual	Manual	--	--	LC	LC	LC	As is	4	--	No	Yes	W	Vlv	RB	No	1	18, 39, 66
FDR system intertie	47	6.2-51	56	B	RHR-V-120	Gate	O	Manual	Manual	--	--	LC	LC	LC	--	3	--	7	No	W	Vlv	RB	No	1	54, 18, 66
FDR system intertie	47	6.2-51	56	B	RHR-V-121	Gate	O	Manual	Manual	--	--	LC	LC	LC	--	3	--	6	No	W	Vlv	RB	No	1	54, 18, 66
SDC return A	19A	6.2-48	55	A	RHR-V-123A	MO gate	I	ac	ac	F,L	RM	C	O/C	--	As is	1	15	--	Yes	W	Vlv	RB	No	5	56, 48b, 18
SDC return B	19B	6.2-48	55	A	RHR-V-123B	MO gate	I	ac	ac	F,L	RM	C	O/C	--	As is	1	15	--	Yes	W	Vlv	RB	No	5	56, 48b, 18
RHR cond pot drain A	117	6.2-39	56	B	RHR-V-124A	MO globe	O	Manual	Manual	39	RM	LC	LC	LC	As is	1.5	Std	11	Yes	W	Vlv	RB	No	5	38, 18, 66
RHR cond pot drain A	117	6.2-39	56	B	RHR-V-124B	MO globe	O	Manual	Manual	39	RM	LC	LC	LC	As is	1.5	Std	12	Yes	W	Vlv	RB	No	5	39, 18, 66

Table 6.2-16

Primary Containment Isolation Valves (Continued)

Line Description	Pent	Figure	GDC	Code Gp (12)	Valve EPN	Valve Type	Loc	Pwr to Open (5)	Pwr to Close (5)	Iso sig (9)	Back Up	Norm Pos (10)	SD Pos	Post LOCA	Fail Pos (6)	Valve Size (14)	Close Time (7,11)	Dist to Pent	Leads to ESF	Proc Fld	Leak Bar (13)	Term Zone (13)	Pot Bypass Leak	SBO (62)	Notes
RHR cond pot drain B	118	6.2-39	56	B	RHR-V-125A	MO globe	O	Manual	Manual	39	RM	LC	LC	LC	As is	1.5	Std	17	Yes	W	Vlv	RB	No	5	39, 18, 66
RHR cond pot drain B	118	6.2-39	56	B	RHR-V-125B	MO globe	O	Manual	Manual	39	RM	LC	LC	LC	As is	1.5	Std	14	Yes	W	Vlv	RB	No	5	39, 18, 66
CAC drain A	117	6.2-39	56	B	RHR-V-134A	MO globe	O	Manual	Manual	--	--	LC	LC	LC	LC	2	No	44	No	W	Vlv	RB	No	5	18, 65, 66
CAC drain B	118	6.2-39	56	B	RHR-V-134B	MO globe	O	Manual	Manual	--	--	LC	LC	LC	LC	2	No	44	No	W	Vlv	RB	No	5	18, 65, 66
Drywell spray A	11A	6.2-42	56	B	RHR-V-16A	MO gate	O	ac	ac	46	RM	C	C	O/C	As is	16	Std	26	Yes	W	Vlv	RB	No	I	56, 18
Drywell spray B	11B	6.2-42	56	B	RHR-V-16B	MO gate	O	ac	ac	46	RM	C	C	O/C	As is	16	Std	12	Yes	W	Vlv	RB	No	I	56, 18
Drywell spray A	11A	6.2-42	56	B	RHR-V-17A	MO gate	O	ac	ac	46	RM	C	C	O/C	As is	16	Std	24	Yes	W	Vlv	RB	No	I	56, 18
Drywell spray B	11B	6.2-42	56	B	RHR-V-17B	MO gate	O	ac	ac	46	RM	C	O	O/C	As is	16	Std	2	Yes	W	Vlv	RB	No	I	56, 18
SDC	20	6.2-46	55	A	RHR-V-209	Check	I	Process	Process	--	--	C	C	--	--	.75	--	--	No	W	Vlv	RB	No	5	48b, 18
RHR test line C	26	6.2-41	56	B	RHR-V-21	MO globe	O	ac	ac	F,V	RM	C	C	C	As is	18	Std	34	Yes	W	Vlv	RB	No	L	18, 56, 60, 66
RPV head spray	2	6.2-40	55	A	RHR-V-23	MO globe	O	ac	dc	L, U, M, R	RM	C	O/C	C	As is	6	Std	28	Yes	W	Vlv	RB	No	C	56, 57, 59,48b, 18
RHR test A	47	6.2-51	56	B	RHR-V-24A	MO globe	O	ac	ac	F,V	RM	C	C	C	As is	18	Std	12	Yes	W	Vlv	RB	No	N	2, 18, 66, 28, 56
RHR test B	48	6.2-51	56	B	RHR-V-24B	MO globe	O	ac	ac	F,V	RM	C	C	C	As is	18	Std	12	Yes	W	Vlv	RB	No	N	2, 18, 66, 56, 57, 59
SP spray A	25A	6.2-43	56	B	RHR-V-27A	MO gate	O	ac	ac	F,V	RM	C	C	O/C	As is	6	36	5	Yes	W	Vlv	RB	No	N	2, 18, 56,48a
SP spray B	25B	6.2-43	56	B	RHR-V-27B	MO gate	O	ac	ac	F,V	RM	C	C	O/C	As is	6	36	6	Yes	W	Vlv	RB	No	N	2, 18, 56, 48a
LPCI A	12A	6.2-47	55	A	RHR-V-41A	Check	I	Process	Process	--	--	C	C	O/C	--	14	--	--	Yes	W	Vlv	RB	No	3	3, 28, 48b, 18
LPCI B	12B	6.2-47	55	A	RHR-V-41B	Check	I	Process	Process	--	--	C	C	O/C	--	14	--	--	Yes	W	Vlv	RB	No	3	3, 48b, 18, 57, 59
LPCI C	12C	6.2-47	55	A	RHR-V-41C	Check	I	Process	Process	--	--	C	C	O/C	--	14	--	--	Yes	W	Vlv	RB	No	3	3, 48b, 18, 60

Table 6.2-16

Primary Containment Isolation Valves (Continued)

Line Description	Pent	Figure	GDC	Code Gp (12)	Valve EPN	Valve Type	Loc	Pwr to Open (5)	Pwr to Close (5)	Iso sig (9)	Back Up	Norm Pos (10)	SD Pos	Post LOCA	Fail Pos (6)	Valve Size (14)	Close Time (7,11)	Dist to Pent	Leads to ESF	Proc Fld	Leak Bar (13)	Term Zone (13)	Pot Bypass Leak	SBO (62)	Notes
LPCI A	12A	6.2-47	55	A	RHR-V-42A	MO gate	O	ac	ac	46	RM	C	C	O/C	As is	14	27	21	Yes	W	Vlv	RB	No	C	48b,56, 18, 28
LPCI B	12B	6.2-47	55	A	RHR-V-42B	MO gate	O	ac	ac	46	RM	C	C	O/C	As is	14	27	20	Yes	W	Vlv	RB	No	C	48b, 56, 18, 57, 59
LPCI C	12C	6.2-47	55	A	RHR-V-42C	MO gate	O	ac	ac	46	RM	C	C	O/C	As is	14	27	20	Yes	W	Vlv	RB	No	C	48b,56, 18, 60
RHR SP suction A	35	6.2-49	56	B	RHR-V-4A	MO gate	O	ac	ac	46	RM	O	O/C	O	As is	24	No	2	Yes	W	Vlv	RB	No	L	48a, 56, 61, 18, 20
RHR SP suction B	32	6.2-49	56	B	RHR-V-4B	MO gate	O	ac	ac	46	RM	O	O/C	O	As is	24	No	2	Yes	W	Vlv	RB	No	L	48a, 56, 61, 18, 20
RHR SP suction C	36	6.2-49	56	B	RHR-V-4C	MO gate	O	ac	ac	46	RM	O	O/C	O	As is	24	No	2	Yes	W	Vlv	RB	No	L	48a, 56, 61, 18, 20
SDC return A	19A	6.2-48	55	A	RHR-V-50A	Check	I	Process	Process	--	--	C	O	--	--	12	--	--	Yes	W	Vlv	RB	No	3	3, 48b, 18, 28
SDC return B	19B	6.2-48	55	A	RHR-V-50B	Check	I	Process	Process	--	--	C	O	--	--	12	--	--	Yes	W	Vlv	RB	No	3	3, 48b, 18, 57, 59
SDC return A	19A	6.2-48	55	A	RHR-V-53A	MO gate	O	ac	ac	M, L, U, R	RM	C	O	--	As is	12	40	5	Yes	W	Vlv	RB	No	C	56,48b, 18, 28
SDC return B	19B	6.2-48	55	A	RHR-V-53B	MO gate	O	ac	ac	M, L, U, R	RM	C	O	--	As is	12	40	5	Yes	W	Vlv	RB	No	C	56, 57, 59, 48b, 18
Heat exch vent	117	6.2-39	56	B	RHR-V-73A	MO globe	O	ac	ac	39	RM	C	O/C	C	As is	2	No	175	No	A/W	Vlv	RB	No	5	18, 56, 66
Heat exch vent	118	6.2-39	56	B	RHR-V-73B	MO globe	O	ac	ac	39	Manual	C	O/C	C	As is	2	No	190	No	A/W	Vlv	RB	No	5	18, 56, 66
SDC	20	6.2-46	55	A	RHR-V-8	MO gate	O	dc	dc	L, U, M, R	RM	C	O	--	As is	20	40	14	Yes	W	Vlv	RB	No	N	56, 20, 48b, 61, 18
SDC	20	6.2-46	55	A	RHR-V-9	MO gate	I	ac	ac	L, U, M, R	RM	C	O	--	As is	20	40	--	Yes	W	Vlv	RB	No	N	48b, 56, 61, 18, 20
RRC pump A seal	43A	6.2-38	56	B	RRC-V-13A	Check	I	Process	Process	--	--	O	O	O	--	.75	No	--	No	W	Vlv	RB	No	5	--
RRC pump B seal	43B	6.2-38	56	B	RRC-V-13B	Check	I	Process	Process	--	--	O	O	O	--	.75	No	--	No	W	Vlv	RB	No	5	--

Table 6.2-16

Primary Containment Isolation Valves (Continued)

Line Description	Pent	Figure	GDC	Code Gp (12)	Valve EPN	Valve Type	Loc	Pwr to Open (5)	Pwr to Close (5)	Iso sig (9)	Back Up	Norm Pos (10)	SD Pos	Post LOCA	Fail Pos (6)	Valve Size (14)	Close Time (7,11)	Dist to Pent	Leads to ESF	Proc Fld	Leak Bar (13)	Term Zone (13)	Pot Bypass Leak	SBO (62)	Notes
RRC pump A seal	43A	6.2-38	56	B	RRC-V-16A	MO gate	O	ac	ac	45	RM	O	O	O	As is	.75	No	2	No	W	Vlv	RB	No	5	56
RRC pump B seal	43B	6.2-38	56	B	RRC-V-16B	MO gate	O	ac	ac	45	RM	O	O	O	As is	.75	No	2	No	W	Vlv	RB	No	5	56
RRC sample line	77Aa	6.2-39	55	A	RRC-V-19	SO globe	I	ac	Spring	A,C	RM	O	C	C/O	C	.75	5	--	No	W	Vlv	TB	Yes	5	56, 48a
RRC sample line	77Aa	6.2-39	55	A	RRC-V-20	SO globe	O	ac	Spring	A,C	RM	O	C	C/O	C	.75	5	--	No	W	Vlv	TB	Yes	5	56, 48a
RWCU from reactor	14	6.2-46	55	A	RWCU-V-1	MO gate	I	ac	ac	A,J,E	RM	O	O	C	As is	6	16.25	--	No	W	Vlv	RW	Yes	M	51, 48a, 56
RWCU from reactor	14	6.2-46	55	A	RWCU-V-4	MO gate	O	dc	dc	A,J,E, Y, W	RM	O	O	C	As is	6	16.25	4	No	W	Vlv	RW	Yes	2	51, 48a, 56
RFW line A	17A/ 17B	6.2-37	55	A	RWCU-V-40	MO gate	O	ac	ac	47	Manual	O	O	O/C	As is	6	No	24	No	W	Vlv	TB	Yes	C	56, 52
Air line for maintenance	93	6.2-55	56	B	SA-V-109	Gate	O	Manual	Manual	--	--	LC	LC	LC	--	2	--	1	No	A	Cap	SB	No	5	54
SLC to RPV	13	6.2-48	55	A	SLC-V-4A	Explosive	O	--	--	--	--	C	C	C	--	1.5	--	136	No	W	Vlv	RB	No	5	21
SLC to RPV	13	6.2-48	55	A	SLC-V-4B	Explosive	O	--	--	--	--	C	C	C	--	1.5	--	136	No	W	Vlv	RB	No	5	21
SLC to RPV	13	6.2-48	55	A	SLC-V-7	Check	I	Process	Process		--	C	C	C	--	1.5	--	--	No	W	Vlv	RB	No	5	
TIP lines	27A	--	56	B	TIP-V-1	SO ball	O	ac	Spring	A,F	RM	C	C	C	C	.375	5	2	No	A	Vlv	RB	No	5	29, 56
TIP lines	27D	--	56	B	TIP-V-10	Exp shear	O	--	Exp	43	--	O	O	O	O	.375	--	2	No	A	Vlv	RB	No	5	29
TIP lines	27E	--	56	B	TIP-V-11	Exp shear	O	--	Exp	43	--	O	O	O	O	.375	--	2	No	A	Vlv	RB	No	5	29
TIP lines	27F	--	56	B	TIP-V-15	SO globe	O	ac	Spring	A,F	--	O	O	C	C	1	--	2	No	A	Vlv	RB	Yes	5	52, 56
TIP lines	27B	--	56	B	TIP-V-2	SO ball	O	ac	Spring	A,F	RM	C	C	C	C	.375	5	2	No	A	Vlv	RB	No	5	29, 56
TIP lines	27C	--	56	B	TIP-V-3	SO ball	O	ac	Spring	A,F	RM	C	C	C	C	.375	5	2	No	A	Vlv	RB	No	5	29, 56
TIP lines	27D	--	56	B	TIP-V-4	SO ball	O	ac	Spring	A,F	RM	C	C	C	C	.375	5	2	No	A	Vlv	RB	No	5	29, 56
TIP lines	27E	--	56	B	TIP-V-5	SO ball	O	ac	Spring	A,F	RM	C	C	C	C	.375	5	2	No	A	Vlv	RB	No	5	29, 56
TIP lines	27F	--	56	B	TIP-V-6	Check	I	Process	Process	--	--	O	C	C	--	.5	--	1	No	A	Vlv	RB	Yes	5	52
TIP lines	27A	--	56	B	TIP-V-7	Exp Shear	O	--	Exp	43	--	O	O	O	O	.375	--	2	No	A	Vlv	RB	No	5	29
TIP lines	27B	--	56	B	TIP-V-8	Exp Shear	O	--	Exp	43	--	O	O	O	O	.375	--	2	No	A	Vlv	RB	No	5	29
TIP lines	27C	--	56	B	TIP-V-9	Exp Shear	O	--	Exp	43	--	O	O	O	O	.375	--	2	No	A	Vlv	RB	No	5	29

Table 6.2-16

Primary Containment Isolation Valves (Continued)

ISOLATION SIGNAL CODES[a]

Signal	Description
A[b]	Reactor vessel low-low water level (Trip level 2)
C[b]	High radiation - main steam line
D[b]	Line break - main steam line (steam line tunnel high temperature, high differential temperature or steam line high flow)
E[b]	Reactor water cleanup system high differential flow or high blowdown flow
F[b]	High drywell pressure
G[b]	Low condenser vacuum
J[b]	Line break in RWCU system – area high temperature or high differential temperature
K[b]	Line break in RCIC system (RCIC area high temperature, high differential temperature, or high steam flow), [Low steam pressure or turbine exhaust diaphragm high pressure are other signals not part of PCRVICS]
L[b]	Reactor vessel low water level (Trip level 3) (A scram occurs at this level. This is the higher of the three low water level signals)
M[b]	Line break in RHR shutdown cooling (high suction flow)
P[b]	Low main steam line pressure at turbine inlet (RUN mode only)
R[b]	RHR equipment area high temperature or high differential temperature
RM	Remote manual switch located in main control room
U	High reactor vessel pressure
V[c]	Reactor vessel low-low-low water level (Trip level 1)
W	High temperature at outlet of RWCU system nonregenerative heat exchanger
Y	Standby liquid control system actuated
Z[b]	Reactor building ventilation exhaust plenum high radiation

[a] See notes 30 through 46 for isolation signals generated by the individual system process control signals or for remote-manual closure based on information available to the operators. These notes are referenced in the “isolation signal” column.

[b] These are the isolation functions of the primary containment and reactor vessel isolation control system (PCRVICS). Other functions are provided for information only.

[c] Reactor vessel low-low-low water level (Trip level 1) is an isolation function of the primary containment and reactor vessel isolation control system (PCRVICS) for Group 1 valves only.

Table 6.2-16

Primary Containment Isolation Valves (Continued)

ABBREVIATIONS/LEGEND

Valve Type	
AO	air-operated
EHO	electrohydraulic operated
MO	motor-operated
PC	positive closing
SO	Solenoid operated
Location	
I	inside containment
O	outside containment
Power to Open/Close	
AC	ac electrical power
DC	dc electrical power
EF	excess flow
pp	process fluid overpressurization
pro	process, process flow
spr	spring
Normal Position	
C	closed
LC	locked closed
LO	locked open
O	open
SC	sealed closed (lead)
Process Fluid	
A	air
H	hydraulic fluid
S	steam
W	water
Termination Zone	
CS	condensate storage tank
RB	reactor building
RBx	reactor building external
RW	radwaste building
SB	service building
TB	turbine building

Table 6.2-16

Primary Containment Isolation Valves (Continued)

NOTES

Type C testing is discussed in Figures 6.2-36 through 6.2-60A which shows the isolation valve arrangement. Unless otherwise noted all valves listed in Table 6.2-16 are Type C tested.

1. Main steam isolation valves require that both solenoid pilots be deenergized to close valves. Accumulator air pressure plus spring set act together to close valves when both pilots are deenergized. Voltage failure at only one pilot does not cause valve closure. The valves are designed to fully close in less than 10 sec.

2. Suppression cooling valves have interlocks that allow them to be manually reopened after automatic closure. This setup permits suppression pool spray, for high drywell pressure conditions and/or suppression water cooling. When automatic signals are not present, these valves may be opened for test or operating convenience.

3. The air test function is not used.

4. The CRD insert and withdraw lines are not subject to Type A testing since these pathways are not open to the Primary Containment atmosphere under post-DBA conditions (ANSI/ANS-56.8-2002, Section 3.2.5). These lines would always remain filled with water and provide a water seal following a design basis accident (DBA) and therefore do not represent a gaseous fission product release pathway.

   The CRD insert and withdraw lines are not subject to Type C testing, since these Primary Containment boundaries do not constitute potential Primary Containment Atmospheric pathways during and following a design basis accident (NEI 94-01, Section 6.0, and ANSI/ANS-56.8-2002, Section 3.3.1(1)).

   See Section 6.2.4.3.2.1.1.4 for additional design information.

5. Alternating current motor-operated valves required for isolation functions are powered from the ac standby power buses. Direct current operated isolation valves are powered from station batteries.

6. All motor-operated isolation valves remain in the last position upon failure of valve power. All air-operated valves close in the safest position on motive air failure.

Table 6.2-16

Primary Containment Isolation Valves (Continued)

NOTES

7. STD - The close limit is based on a standard minimum closing rate of 12 in. of nominal valve diameter per minute for gate valves and 4 in. of valve stem travel per minute for globe valves.

   No - No limiting value of full stroke closure time is specified. The close limit is based on results from testing performed in accordance with ASME/ANSI OM Part 10 Section 3 Testing Requirements.

8. Reactor building ventilation exhaust plenum high radiation signal (Z) is generated by two trip units in each safety division. This requires a trip from both units in a division (fail-safe design) to initiate isolation.

9. Primary containment and reactor vessel isolation signals (PCRVIS) are indicated by letters. Isolation signals generated by the individual system process control signals or for remote manual closure based on information available to the operator are discussed in the referenced notes in the "isolation signal" column.

10. Normal status position of valve (open or closed) is the position during normal power operation of the reactor (see Normal Position column). Valves, blind flanges, and deactivated automatic valves that are within the primary containment or other areas administratively controlled to prohibit access for reasons of personnel safety are locked, sealed, or otherwise secured in the closed position. Valves 1.5 in. and smaller connected to vents, drains, or test connections must be closed but need not be sealed.

11. The specified closure rates are as required for containment isolation or system operation, whichever is less. Reported times are in seconds.

12. All isolation valves are Seismic Category I.

13. Used to evaluate primary containment leakage which may bypass the secondary containment emergency filtration system.

14. Reported sizes are the valve nominal diameters in inches. Size indicated is containment side of relief valve when relief valve size is not equal on both sides.

15. Reactor vessel low-low-low water level (Trip level 1) is an isolation function of the primary containment and reactor vessel isolation control system (PCRVICS) for Group 1 valves only.

Table 6.2-16

Primary Containment Isolation Valves (Continued)

NOTES

16. Utilizes rupture discs downstream of the PCIVs and upstream of the secondary containment penetration to establish a closed system for compliance with GDC 56.

17. Rupture discs prevent secondary containment bypass leakage.

18. These lines connect to systems outside of the primary containment which meet the requirements for a closed system. These systems are considered an extension of the primary containment. Any external leakage out of these systems, within the Reactor Building, is processed by the SGT system.

19. Relief valve setpoint greater than 77.5 psig (1.5 times containment design pressure).

20. The condensate system can be used to flush ECCS when connected by a spool piece. The connection creates a potential secondary containment bypass leak path. This penetration is isolated from a potential secondary containment bypass leak path through the condensate system by a blind flange installed on the RHR piping flange. The spool piece, COND-RSP-1, is connected to the condensate system with a blind flange on the other end.

21. Cannot be reshut after opening without disassembly.

22. See 6.2.4.3.2.2.1.2.

23. See 6.2.4.3.2.2.2.

24. Not Used.

25. DELETED.

26. The disc on the check valve is maintained in the close position during normal operation by means of a spring actuated lever arm and magnets embedded in the periphery of the disc. The magnetic and spring forces maintain the disc shut until the differential force to open the valve exceeds approximately 0.2 psid. The check valves have position indication lights which can alert the operators to the fact that the check valve is not fully closed. The operator can then remotely shut the valve by means of a pneumatic operator. The operating switch is spring-return to neutral so the vacuum breaker function will not be impaired.

Table 6.2-16

Primary Containment Isolation Valves (Continued)

NOTES

27. Instrument lines that penetrate primary containment conform to Regulatory Guide 1.11. The lines that connect to the reactor pressure boundary include a restricting orifice inside containment, are Seismic Category I and terminate in instruments that are Seismic Category I. The instrument lines also include manual isolation valves and excess flow check (EFC) valves. Manual and EFC valves have no active safety (containment isolation) function requirements. These penetrations will not be Type C tested since the integrity of the lines are continuously demonstrated during plant operations where subject to reactor operating pressure. In addition, all lines are subject to the Type A test pressure on a regular interval. Leaktight integrity is also verified with completion of functional and calibration surveillance activities as well as by visual inspection.

28. The condensate system can be used to flush ECCS when connected by a spool piece. The connection creates a potential secondary containment bypass leak path. This penetration is isolated from a potential secondary containment bypass leak path through the condensate system by a blind flange installed on the RHR piping flange. The spool piece, COND-RSP-2, is connected to the condensate system with a blind flange on the other end.

29. The ball valves are Type C tested in accordance with Appendix J of 10 CFR 50.
Because the shear valves have explosive squibs and require testing to destruction, they are not Type C tested. Technical Specifications surveillance requirements ensure shear valve operability.

See subsection 6.2.4.3.2.2.3.11 for a TIP system isolation evaluation against General Design Criterion 56.

30. Deleted.

31. PCRVIS is not desirable since the feedwater system, although not an ESF system, could be a significant source of makeup after a LOCA which is not concurrent with a seismic event.

Feedwater check valves on either side of the containment can provide immediate leak isolation. The feedwater block valves can, however, be remote-manually closed if there is no indication of feedwater flow.

Table 6.2-16

Primary Containment Isolation Valves (Continued)

NOTES

32. The RCIC suppression pool suction valve is normally closed and does not receive an automatic isolation signal.

    Operator action can be taken to remote-manually shut isolation valve RCIC-V-31. The system would be manually isolated on a reactor building sump high level alarm if RCIC is determined to be the source of leakage in the reactor building.

33. The RCIC minimum flow valve is open only between the time of system initiation and the time at which the system flow to the RPV exceeds the pump minimum flow requirement. The valve is shut at all other times. Valve RCIC-V-19 auto closes when the turbine throttle valve is closed following a turbine trip. Should a leak occur when the valve is open, it will be detected by a high level alarm in the appropriate reactor building sump.

34. The RCIC injection valve is open only during RCIC turbine operation. Injection line check valves on either side of the containment can provide immediate leak isolation. Valve RCIC-V-13 auto closes when the turbine throttle valve is closed following a turbine trip.

35. The RCIC steam exhaust valve, RCIC-V-68, is normally open at all times. Should a leak occur, it would be detected and alarmed by the RCIC room high temperature leak detection system.

36. The RCIC vacuum pump discharge valve, RCIC-V-69, is normally open at all times. The valve could be remote-manually closed by the operator upon control room indication that vacuum can no longer be maintained in the barometric condenser.

37. DELETED

38. The minimum flow valve for an ECCS pump is open whenever the pump is running and the flow in the pump discharge line is below the trip setpoint. The valve is shut at all other times. Should a leak occur when the valve is open, it will be detected by a high level alarm in the appropriate reactor building sump.

39. These valves are deactivated. The valves are shown as motor operated, however, the power leads to the motors have been disconnected and the handwheels have been chained and padlocked in the closed position.

Table 6.2-16

Primary Containment Isolation Valves (Continued)

NOTES

40. Normally closed. Signaled to open if reactor building pressure exceeds wetwell pressure by 0.5 psid (analytical limit). Valves automatically reshut when the above condition no longer exists. Operators use valve position indicator as confirmation of valve status.

41. Indication of containment instrument air main header pressure and a low pressure alarm exist in the main control room. The operator can remote-manually shut valve CIA-V-20 should the supply from the CN system or from the CAS cross-tie becomes unavailable. Isolation check valve CIA-V-21 provides immediate isolation.

42. Indication of nitrogen bottle header pressure and a low pressure alarm exist in the main control room. The operator can remote-manually shut valve CIA-V-30(A, B) should the nitrogen bottle bank pressure decrease below the alarm setpoint. Isolation check valves CIA-V-31(A, B) provide immediate isolation.

43. The TIP shear valves are remote-manually closed following control room indication of the failure of the TIP ball valves to close.

44. Normally closed. Opened only when testing wetwell-to-drywell (WW-DW) vacuum breakers. Test connection upstream of outer isolation valve is normally open. Closed during testing.

45. The isolation valve can be remote-manually closed upon indication that the CRD or the RRC pumps have tripped. Isolation check valves RRC-V-13 (A, B) provide immediate isolation.

46. These valves are the ECCS and drywell spray suction and discharge isolation valves. There are no automatic isolation signals. The valve closure requirement is indicated by a high level alarm in the appropriate reactor building sump.

47. The isolation valve can be remote-manually closed upon indication that the RWCU pumps have tripped. The reactor feedwater isolation check valves provide immediate isolation.

48a. Not subject to Type C leak testing, per Primary Containment Leakage Rate Testing Program. Prepared per Option B of 10 CFR 50 Appendix J.

Table 6.2-16

Primary Containment Isolation Valves (Continued)

NOTES

48b. The isolation valve is tested with water. The maximum allowable leakage rate is included in the Technical Specifications.

49. Isolation for the RCIC turbine exhaust vacuum breaker lines (X-116) is provided by containment isolation valves in the RCIC turbine exhaust line (X-4) and the RHR combined return line (X-47, X-48) to the suppression pool. Valves RCIC-V-110 and RCIC-V-113 serve as an extension of containment but do not function as containment isolation valves and will not require Type C testing.

50. System isolation valves are normally closed. The system is placed in operation following a LOCA for post accident sampling. Valve position indication is provided in the main control room.

51. The limiting times for valve closure are based on the pipe break isolation times used in the Environmental Equipment Qualification Program to establish the environmental profiles for qualifying safety-related equipment within the reactor building.

52. The sum of the Type C leak rate tests for the potential bypass leak paths will not exceed 0.04 percent of primary containment volume per day.

53. Instrument lines that penetrate primary containment conform to Regulatory Guide 1.11. These lines include manual isolation valves and excess flow check (EFC) valves, or solenoid-operated valves capable of remote operation from the control room. These lines are Seismic Category I and terminate at instrument racks that are Seismic Category I. Manual and EFC valves have no active safety (containment isolation) function requirements. These penetrations will not be Type C tested since the communicating lines are extensions of primary containment and the valves do not receive automatic isolation signals. In addition, all lines are subject to the Type A test on a regular interval (excluding some local pressure instruments which are over-ranged or initiate RPS actuations by Type A test pressure). Section 6.2.4.4 discusses periodic actuation testing requirements.

54. These paths are not potential secondary containment bypass leakage paths and are not required to meet the requirements for secondary containment design. The piping system outside of the outermost containment isolation valve is aligned such that leakage past these valves will be released to secondary containment and be processed by standby gas treatment.

Table 6.2-16

Primary Containment Isolation Valves (Continued)

NOTES

55. Not Used.

56. A channel check and channel calibration is required of the remote valve position indication.

57. The condensate system can be used to flush ECCS when connected by a spool piece. The connection creates a potential secondary containment bypass leak path. This penetration is isolated from a potential secondary containment bypass leak path through the condensate system by a blind flange installed on the RHR piping flange. The spool piece, COND-RSP-3, is connected to the condensate system with a blind flange on the other end.

58. The condensate system can be used to flush ECCS when connected by a spool piece. The connection creates a potential secondary containment bypass leak path. This penetration is isolated from a potential secondary containment bypass leak path through the condensate system by a blind flange installed on the LPCS piping flange. The spool piece, COND-RSP-5, is connected to the condensate system with a blind flange on the other end.

59. The condensate system can be used to flush ECCS when connected by a spool piece. The connection creates a potential secondary containment bypass leak path. This penetration is isolated from a potential secondary containment bypass leak path through the condensate system by a blind flange installed on the RHR piping flange. The spool piece, COND-RSP-6, is connected to the condensate system with a blind flange on the other end.

60. The condensate system can be used to flush LPCI C through a spool piece. The connection creates a potential secondary containment bypass leak path. This penetration is isolated from a potential secondary containment bypass leak path through the condensate system by a blind flange installed on the RHR piping flange of COND-RSP-4.

Table 6.2-16

Primary Containment Isolation Valves (Continued)

NOTES

61. A blind flange is installed downstream of valves RHR-V-108 and RHR-V-109. This blind is located in the RHR pump room C and ensures that there is no by-pass leakage from the RHR pump suction line to the condensate storage tanks. The condensate system can be used to flush RHR shutdown cooling through a spool piece. The connection creates a potential secondary containment bypass leak path. This penetration is isolated from a potential secondary containment bypass leak path through the condensate system by a blind flange installed on RHR-RSP-1.

62. This column provides the station blackout (SBO) criterion that was used for each primary containment isolation valve to establish whether or not the valve needed to be assessed for closure capability in the event of an extended SBO. The values provided in this column are defined as follows:

Criterion	Basis for Exclusion
1	Valve is normally locked closed during operation.
2	Valve auto closes or fails closed on loss of ac power or air.
3	Valve is a check valve.
4	Valve is in nonradioactive closed-loop systems not expected to be breached during a SBO (the valve cannot be in a line that communicates directly with the containment atmosphere).
5	Valve is less than 3 in. nominal diameter.

Table 6.2-16

Primary Containment Isolation Valves (Continued)

NOTES

Valves that did not meet one of these exclusion criteria were considered as "valves of concern." The alphabetic data provided in this column identifies how this set of valves was addressed:

Criterion	Additional Basis for Exclusion
C	Valve has an in-series check valve that will provide for isolation of the penetration.
D	Valve has an in-series valve that fails closed on an SBO.
M	Valve has an in-series valve with SBO closure capability.
I	The penetration is provided with an interlock that ensures closure of at least one of the containment isolation valves during operation.
H	Valve is required to provide for HPCS operation.
L	For the associated penetration, GDC 56 is satisfied by a single isolation valve, connected to the suppression pool with the line submerged and a high integrity closed loop system outside containment.
N	Valve is required to be closed during power operation (open for brief periods for the purpose of performing a surveillance is acceptable) and the piping outside containment being a high integrity closed loop system.
P	Valve is included in the table as being associated with a potential secondary containment bypass leakage path. It is not a primary containment isolation valve.

Table 6.2-16

Primary Containment Isolation Valves (Continued)

NOTES

63. Leakage rate not included in sum of Type B and C test.

64. These are potential secondary containment bypass leakage paths whenever the railroad bay doors are open. The valves are tested for leakage to ensure requirements for limiting secondary containment bypass leakage are satisfied.

65. Valves RHR-V-134A and RHR-V-134B have been deactivated. Blind flanges CAC-BF-3A and CAC-BF-3B provide containment pressure boundaries in the lines outboard of valves.

66. These valves are in lines that are below the minimum water level in the suppression pool and are part of closed systems outside of the primary containment. Therefore, 10 CFR 50 Appendix J Type C and hydraulic local leak rate testing is not required.

Table 6.2-17
DELETED

Table 6.2-19

Assumptions and Initial Conditions for Negative Pressure Design Evaluation

A. Containment preincident conditions used for sizing internal vacuum breakers (wetwell to drywell)

		Drywell (DW)	Suppression Chamber (WW)
1.	Pressure, psig	0	0
2.	Temperature, °F	150	50
3.	Relative humidity, %	100	100

B. Containment preincident conditions used for sizing external vacuum breakers (reactor building to wetwell).

		Drywell (DW)	Suppression Chamber (WW)
1.	Pressure, psig	-1.0	-0.5
2.	Airspace temperature, °F	135	50
	Pool temperature, °F	N/A	50
3.	Relative humidity, %	100	100

Spray temperature is equivalent to suppression pool temperature.

Table 6.2-19a

Limiting Conditions for Maximum
Negative Pressure Differentials Applied
to Columbia Generating Station Specifications

Hypothetical Event	DW-WW VBs	RB-WW VBs	DW Sprays	Maximum Negative Pressure Differential (psid) WW-DW	RB-WW	DW-RB	Remarks
(1) Inadvertent spray activation	7	3	NA	-	-	-	Not possible due to containment high pressure interlock
(2) Small pipe break							
liquid	7	2	1[a]	0.57	1.38	1.88	
steam	7	2	1[a]	0.55	0.61	1.11	
(3) DBA	7	2	1[a]	0.55	0.71	1.21	1 RB-WW VB failure
	7	3	2	0.67	0.81	1.31	Use of two sprays No VB failure VBs adequate
(4) Vented drywell with a small steam leak	7	3	NA	-	-	-	Included in small pipe break event (2)
(5) Normal heating and cooling cycles	7	3	NA	-	-	-	Controlled with the primary containment cooling system

[a] Drywell and wetwell sprays used in event mitigation from one RHR loop only.

Table 6.2-20

Blowdown Mass/Energy Release Rates for a Double Ended Guillotine Break in 6-in. RCIC Line*
Steam

Time (sec)	Mass Rate (lb/sec)	Energy Rate (Btu/sec x 10^3)
0.0	398.2	474.694
3.0	398.2	474.694

* Original rated power – Reference 6.2-29.

Table 6.2-21

Blowdown Mass/Energy Release Rates for a Double Ended Guillotine Break in 6-in. RCIC Line*
Water

Time (sec)	Mass Rate (lb/sec)	Energy Rate (Btu/sec x 10^3)
0.0	0.0	0.0
0.001	331.1	388.347
0.004	205.6	195.094
0.010	398.3	231.811
0.015	598.8	329.639
0.020	700.0	381.430
0.025	724.4	392.915
0.050	580.0	311.576
0.10	394.2	198.953
0.20	144.6	59.387
0.30	52.4	18.555
0.40	35.1	8.884
0.50	46.1	11.046
1.00	45.9	10.585
1.50	36.0	7.639
1.90	30.4	6.314

* Original rated power – Reference 6.2-30.

Table 6.2-21

Blowdown Mass/Energy Release Rates for a Double Ended Guillotine Break in 6-in. RCIC Line* Water (Continued)

Time (sec)	Mass Rate (lb/sec)	Energy Rate (Btu/sec x 10^3)
2.00	21.1	4.378
2.50	23.3	4.523
3.00	3.2	0.611

* Original rated power – Reference 6.2-30.

Table 6.2-22

Blowdown Mass/Energy Release Rates for a Double Ended Guillotine Break in 24-in. Recirculation Line* Steam

Time (sec)	Mass Rate (lb/sec x 10^3)	Energy Rate (Btu/sec x 10^6)
0.0	0.0	0.0
21.0	0.0	0.0
21.01	3.2	3.815
30.00	2.4	2.861
40.00	1.3	1.550
47.00	2.0	2.384
47.01	4.0	4.768
48.00	0.0	0.0
50.00	0.0	0.0

* Original rated power – Reference 6.2-31.

Table 6.2-23

Blowdown Mass/Energy Release Rates for a Double Ended Guillotine Break in 24-in. Recirculation Line* Water

Time (sec)	Mass Rate (lb/sec x 10^3)	Energy Rate (Btu/sec x 10^6)
0.00	22.72	12.393
0.00159	22.72	12.393
0.00171	34.07	18.585
1.537	34.07	18.585
1.568	27.56	15.033
2.037	27.56	15.033
2.040	25.00	13.637
21.00	25.00	13.637
21.01	11.80	6.437
30.00	7.00	3.818
40.00	3.50	1.909
45.00	3.80	2.073
47.00	3.70	2.018
47.01	0.0	0.0
50.00	0.0	0.0

* Original rated power – Reference 6.2-31.

Table 6.2-24

Nodal Volume Data
for the Case of a 6-in. RCIC Line Break and the Case of a 24-in. Recirculation Line Break*

Node Number	Description	Net Volume (ft^3)	Elevation (Bottom, ft)	Height (ft)
1	Drywell above Bulkhead Plate	4,789.5	582.6	15.98
2	Drywell below Bulkhead Plate	195,759.5	499.6	83.1

* Original rated power.

Table 6.2-25

Flow Path Data
for the Case of a 6-in. RCIC Line Break*

From Node	To Node	Flow Area (ft^2)	Inertia (L/A, ft^{-1})	Form Loss Coefficient		Friction Factor f
				K_F*	K_R**	
1	2	4.926	0.4107	1.6	1.6	(See Note)
1	2	4.666	1.60	4.090	4.102	(See Note)

Note: The fanning friction factor is automatically included by an internal calculation in the computer program and is variable with reynolds number.

$K_F^* = K_{Forward}$

$K_R^{**} = K_{Reverse}$

* Original rated power.

Table 6.2-26

Flow Path Data
for the Case of a 24-in. Recirculation Line Break*

From Node	To Node	Flow Area (ft^2)	Inertia (L/A, ft^{-1})	Form Loss Coefficient		Friction Factor f
				K_F*	K_R**	
2	1	4.926	0.4107	1.6	1.6	(See Note)
2	1	4.666	1.60	4.102	4.090	(See Note)

Note: The fanning friction factor is automatically included by an internal calculation in the computer program and is variable with reynolds number.

$K_F^* = K_{Forward}$

$K_R^{**} = K_{Reverse}$

* Original rated power.

Table 6.2-27

Peak Differential Pressure and Time of Peak*

Case		Peak Differential Pressure, psi	Time of Peak Differential Pressure, sec
6 in.	RCIC Line Break In Upper Head Region	11.46	0.75
24 in.	Recirculation Line In Lower Region	11.17	1.10

* Original rated power.

Table 6.2-28

Analytical Sequence of Events in Secondary Containment

Post-LOCA Time		Events in Secondary Containment
0	-	Reactor building differential pressure is 0.0-in. w.g. between inside and outside of building
	-	Loss of offsite power
	-	All normal operating equipment ceases to function
0.1 sec[a]	-	Emergency building lighting on (automatic)
15 sec	-	Emergency power on (automatic)
120 sec	-	Standby gas treatment system on (automatic)
300 sec	-	Full service water flow to ECCS pump room coolers
20 min	-	Building pressure reduced to -0.25-in. w.g.
1 hr[b]	-	Normal lighting off (manual)
12 hr	-	One fuel pool cooling loop on (manual)

[a] Analysis conservatively assumes emergency lighting is on after 0.1 sec even though diesels take 15 sec to restore power.

[b] Normal lighting terminates on FAZ. Analysis conservatively assumes failure to terminate for 1 hr.

Table 6.2-30

Post-LOCA Transient Heat Input Rates
to Secondary Containment

Heat Source	Heat Input, Btu/hr	Remarks
Primary containment walls (PCW)	$q_1 = 33{,}161\ (t_{pcw}-t_{air})$, for $t_{air} < t_{pcw}$ $q_1 = 0$, for $t_{air} > t_{pcw}$	$t_{pcw} = 105°F$ constant $t_{air, r}$ = reactor building air temperature
Normal equipment decay heat	Electrical equipment (combined) $q_2 = 1475\ (150e^{-T}-t_{air})$, for $t_{air} < 150e^{-T}$ $q_2 = 0$, for $t_{air} \geq 150e^{-T}$	Max. eq. surface Temperature = 150°F for $T \leq 0$
	Piping (combined) $q_3 = 664\ (182e^{-T} - t_{air})$, for $t_{air} < 182\ e^{-T}$ $q_3 = 0$, for $t_{air} \geq 182e^{-T}$	Max. eq. surface Surface temp= 182°F for $t \leq 0$
Emergency equipment	Emergency lighting ($t \geq 0$ sec) $q_4 = 203{,}700$	
	Standby gas treatment system ($T \geq 34$ sec) $q_5 = 8800$	
	Emergency core cooling system ($T \geq 30$ sec) $q_6 = 4476\ (t_{cw} - t_{air})$, for $t_{air} < t_{cw}$ $q_6 = 0$, for $t_{air} \geq t_{cw}$	T,hr / tcw,* °F 0 / 95 2 / 180 50 / 143 100 / 132 *cw = cooling water

Table 6.2-30

Post-LOCA Transient Heat Input Rates
to Secondary Containment (Continued)

Heat Source	Heat Input, Btu/hr	Remarks
Fuel pool sensible heat	$q_7 = 299.2\ (t_{pw}-t_{air})^{4/3}$	t_{pw} = pool water temp. ^{o}F
Pool evaporation heat	$q_8 = 1385.19\ (t_{pw} - t_{air})^{1/3}\ (W_{ps}- W_{air})\lambda p$	t_{pw} = pool water temp. °F W_{ps} = humidity ratio ° Saturated moist air Evaluated at t_{pw} of wet surface (1bw/1ba) W_{ps} = humidity ratio of moisture air (1bw/1ba) λp = heat of vaporization (1bw/1ba)
Infiltration air heat-up	$q_9 = -0.24945\ (t_{air} - 100) >$	
Structural steel heat-up	$q_{10} = - 11400\ (t_{air} - t_{steel})^{4/3}$	t_{steel} = steel temp (°F)
Total	$Q = q_1 + q_2 + q_3 + q_4 + q_5 + q_6 + q_7 + q_8 + q_9 + q_{10}$	$Q = \sum_{1=10}^{10} q_1$

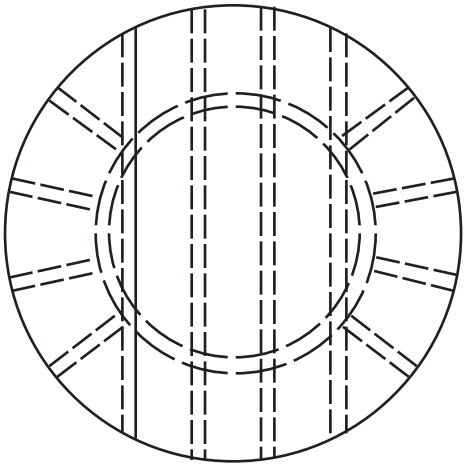

Top View Of Jet Deflector

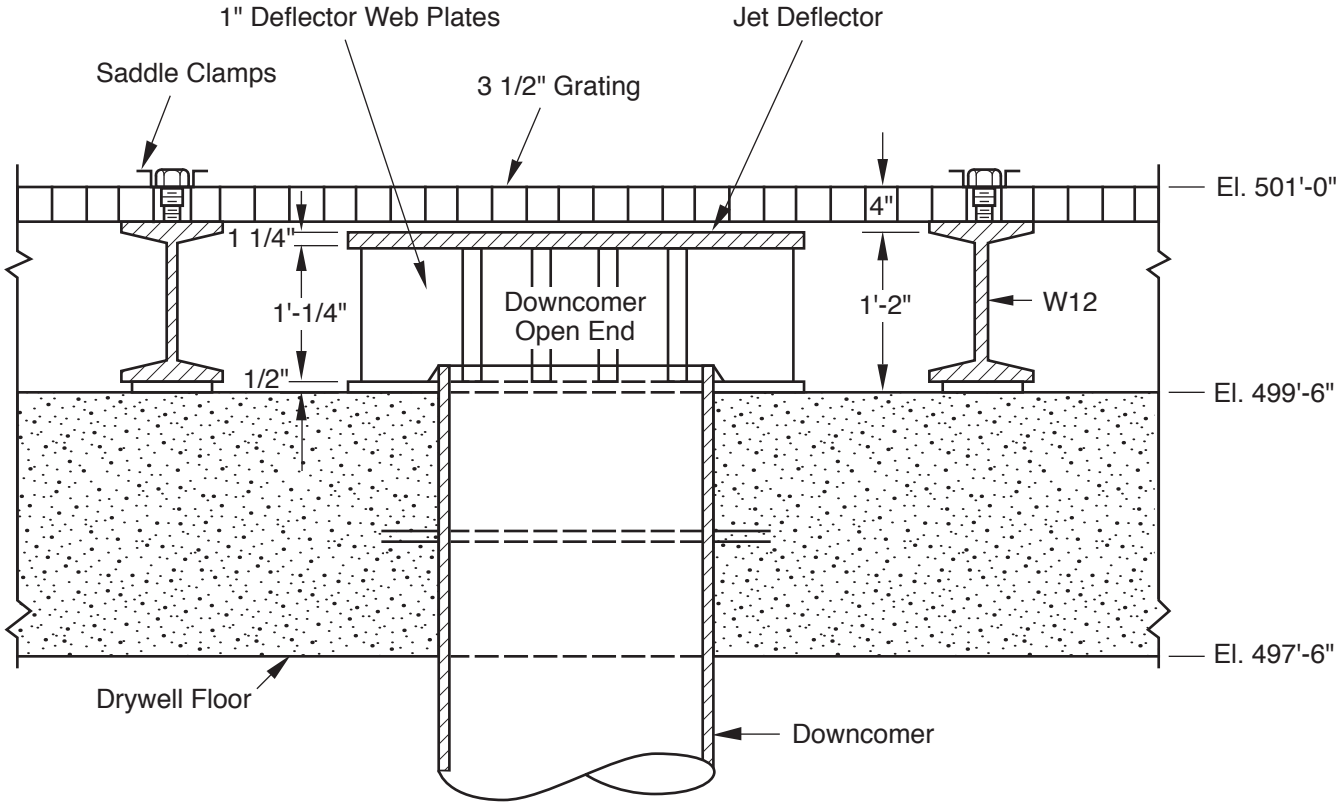

Columbia Generating Station **Final Safety Analysis Report**	**Typical 24 in. Downcomer Vent with Jet Deflector**		
	Draw. No. **900547.40**	Rev.	Figure **6.2-1**

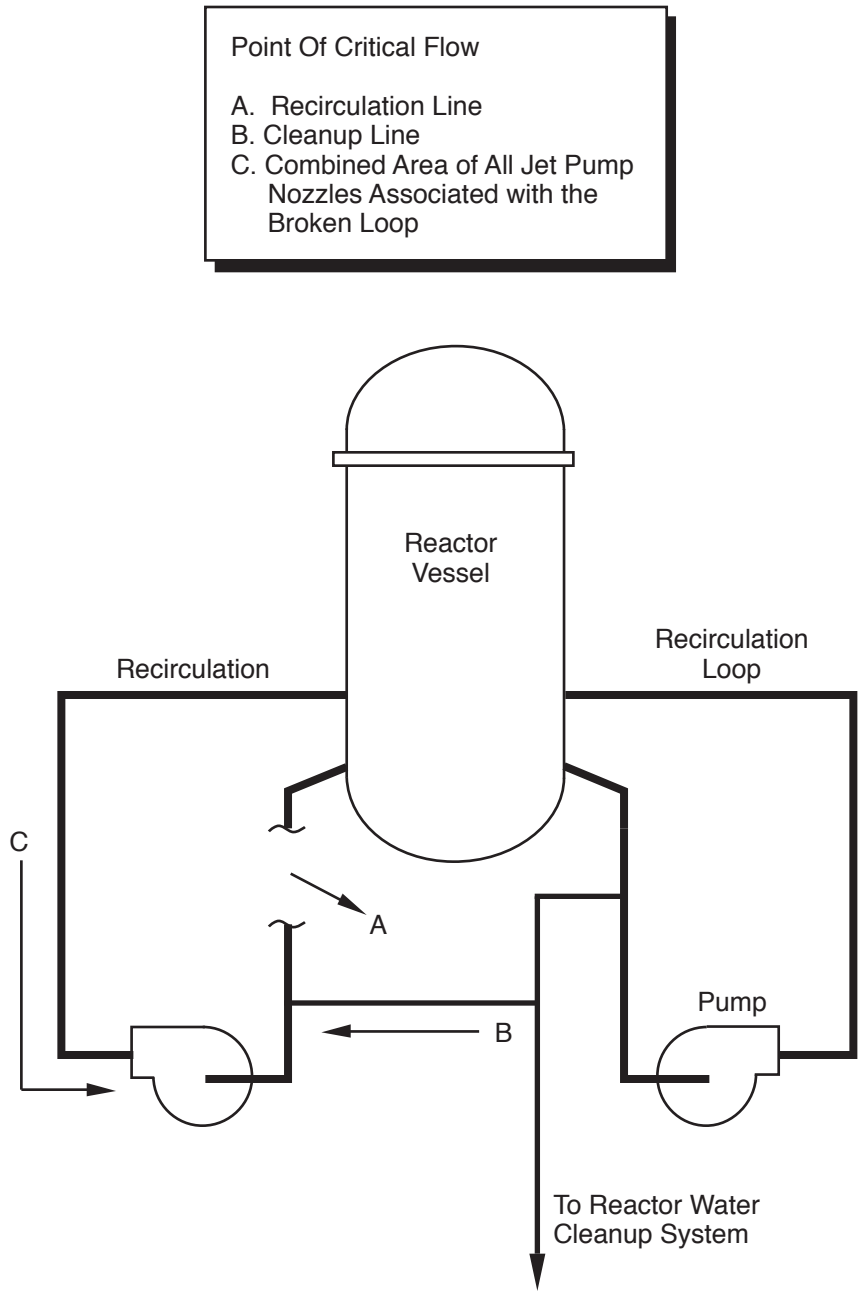

Columbia Generating Station Final Safety Analysis Report	**Diagram of the Recirculation Line Break Location**		
	Draw. No. **900547.36**	Rev.	Figure **6.2-2**

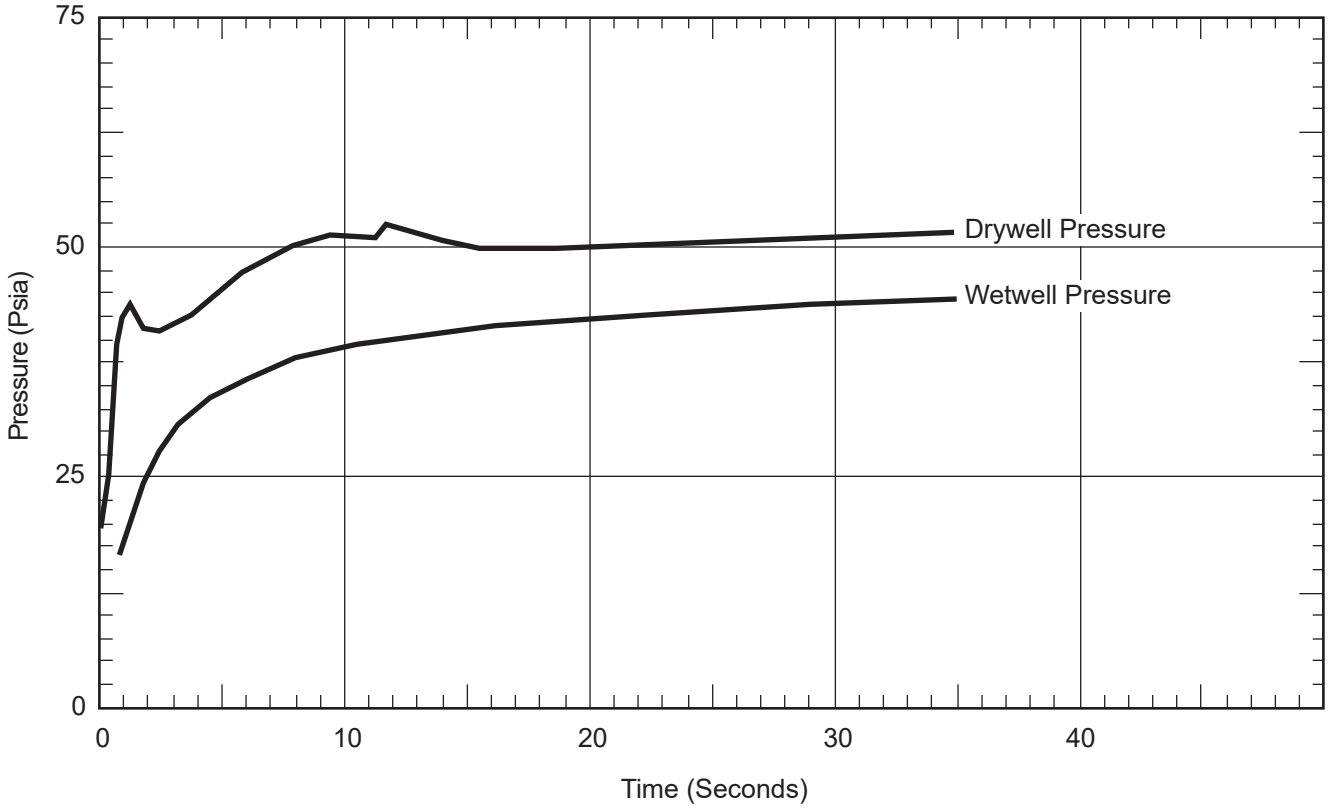

Columbia Generating Station Final Safety Analysis Report	Pressure Response for Recirculation Line Break (Initial Containment Pressure 2 psig)		
	Draw. No. 900547.37	Rev.	Figure 6.2-3

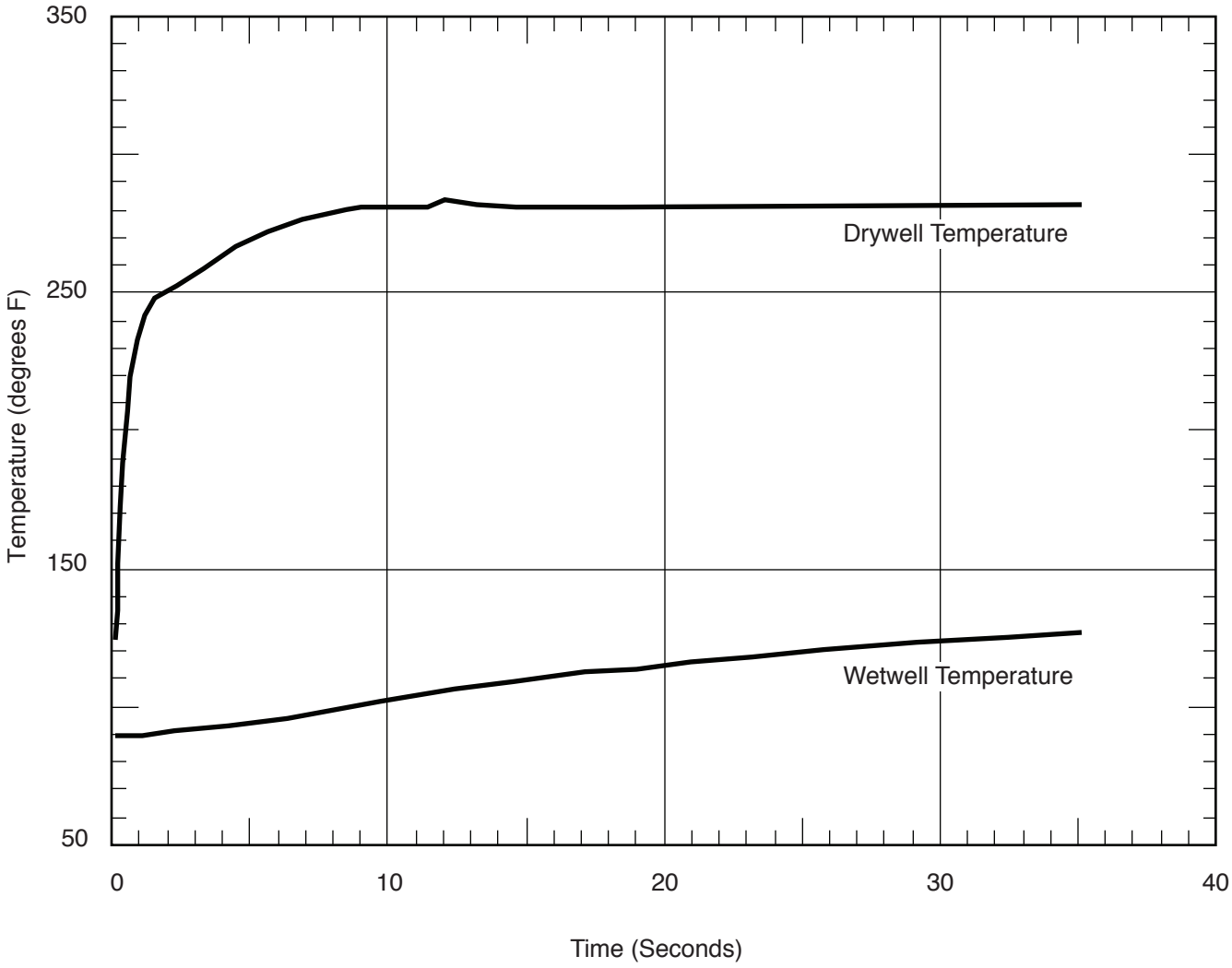

Columbia Generating Station **Final Safety Analysis Report**	**Temperature Response for Recirculation Line Break (Initial Containment Pressure 2 psig)**		
	Draw. No. **960222.02**	Rev.	Figure **6.2-4**

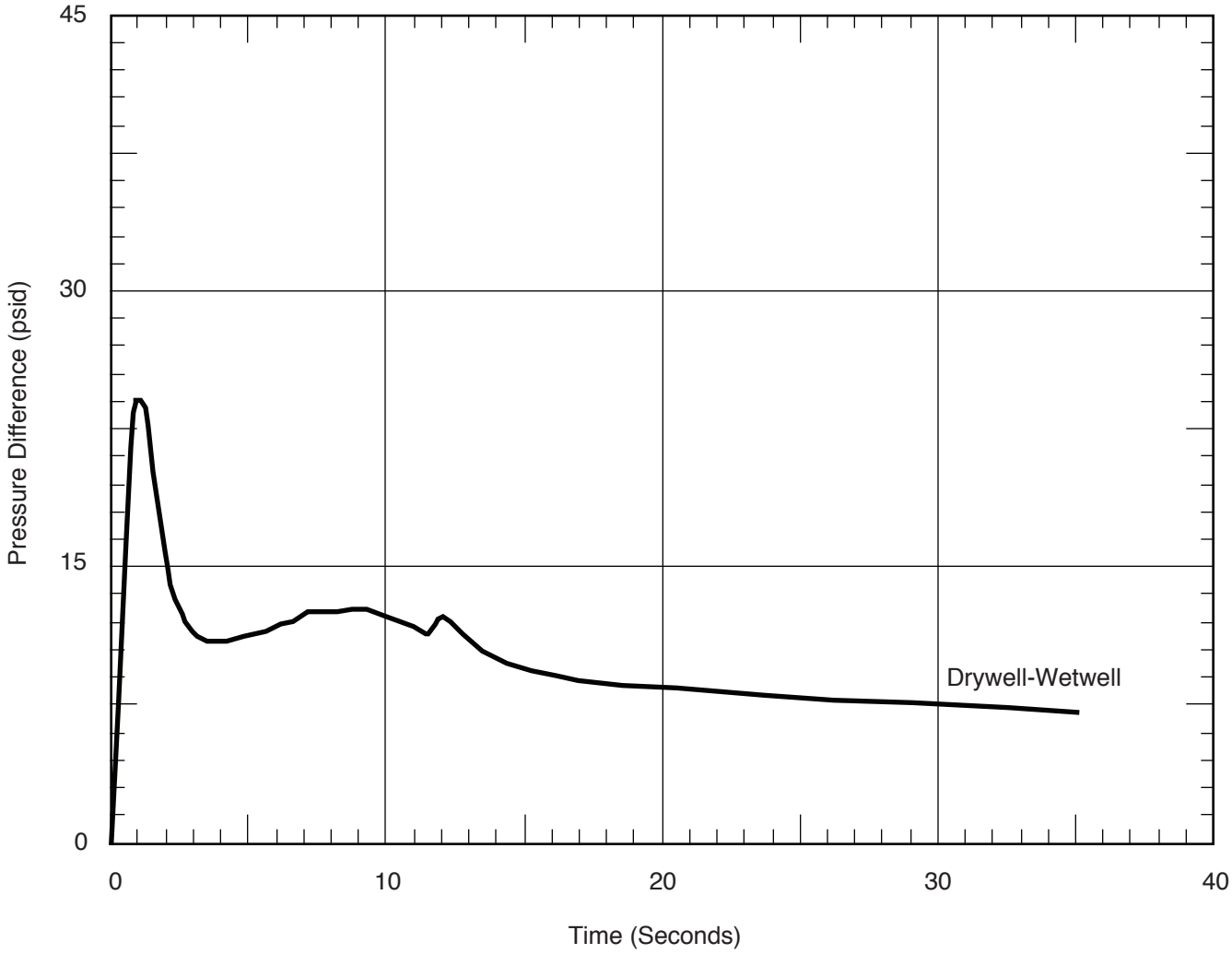

Columbia Generating Station **Final Safety Analysis Report**	**Drywell Floor ΔP Response for Recirculation Line Break (Initial Containment Pressure 2 psig)**		
	Draw. No. **960222.03**	Rev.	Figure **6.2-5**

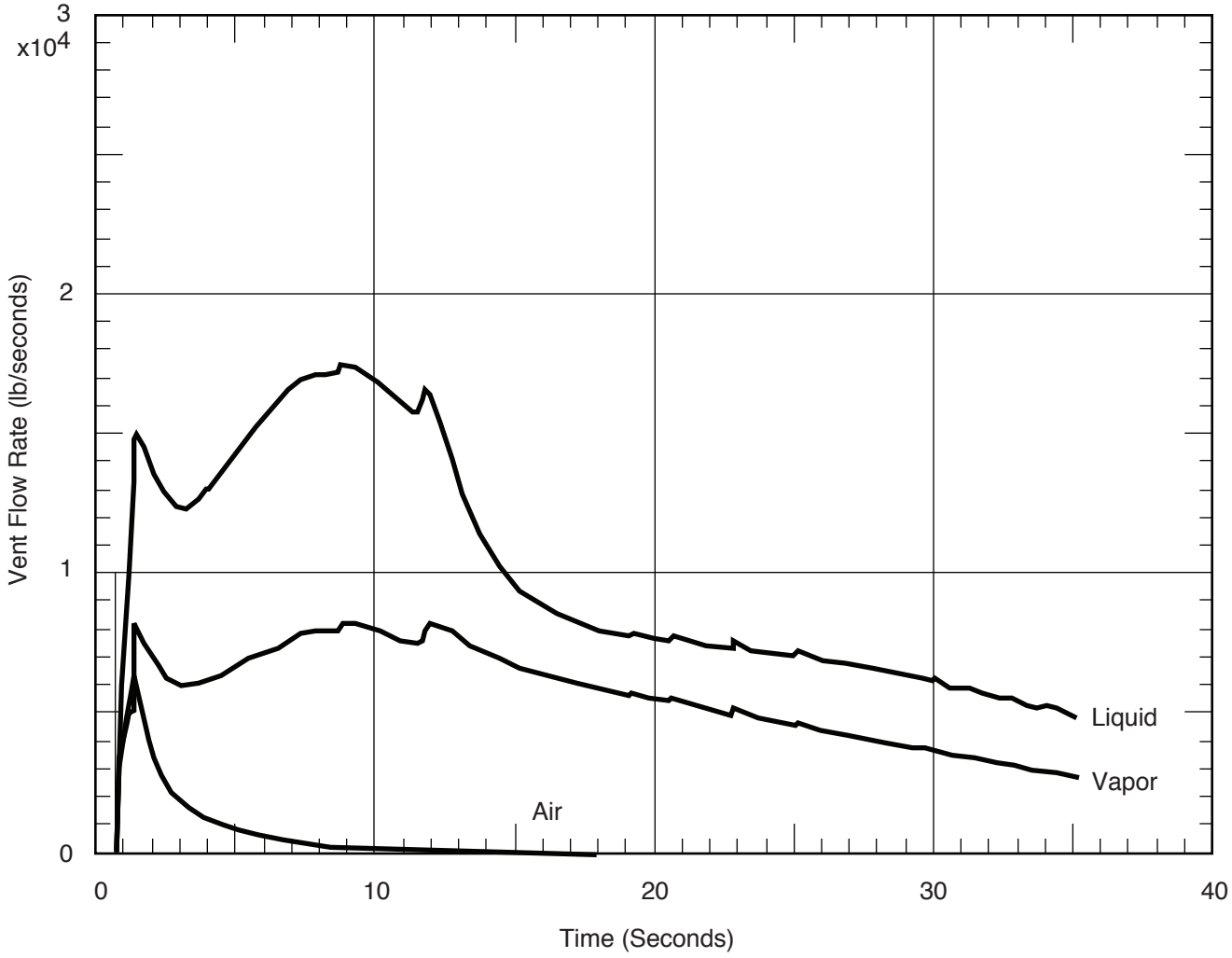

Columbia Generating Station Final Safety Analysis Report	**Containment Vent System Flow Rate for Recirculation (Initial Containment Pressure 2 psig)**		
	Draw. No. **960222.04**	Rev.	Figure **6.2-6**

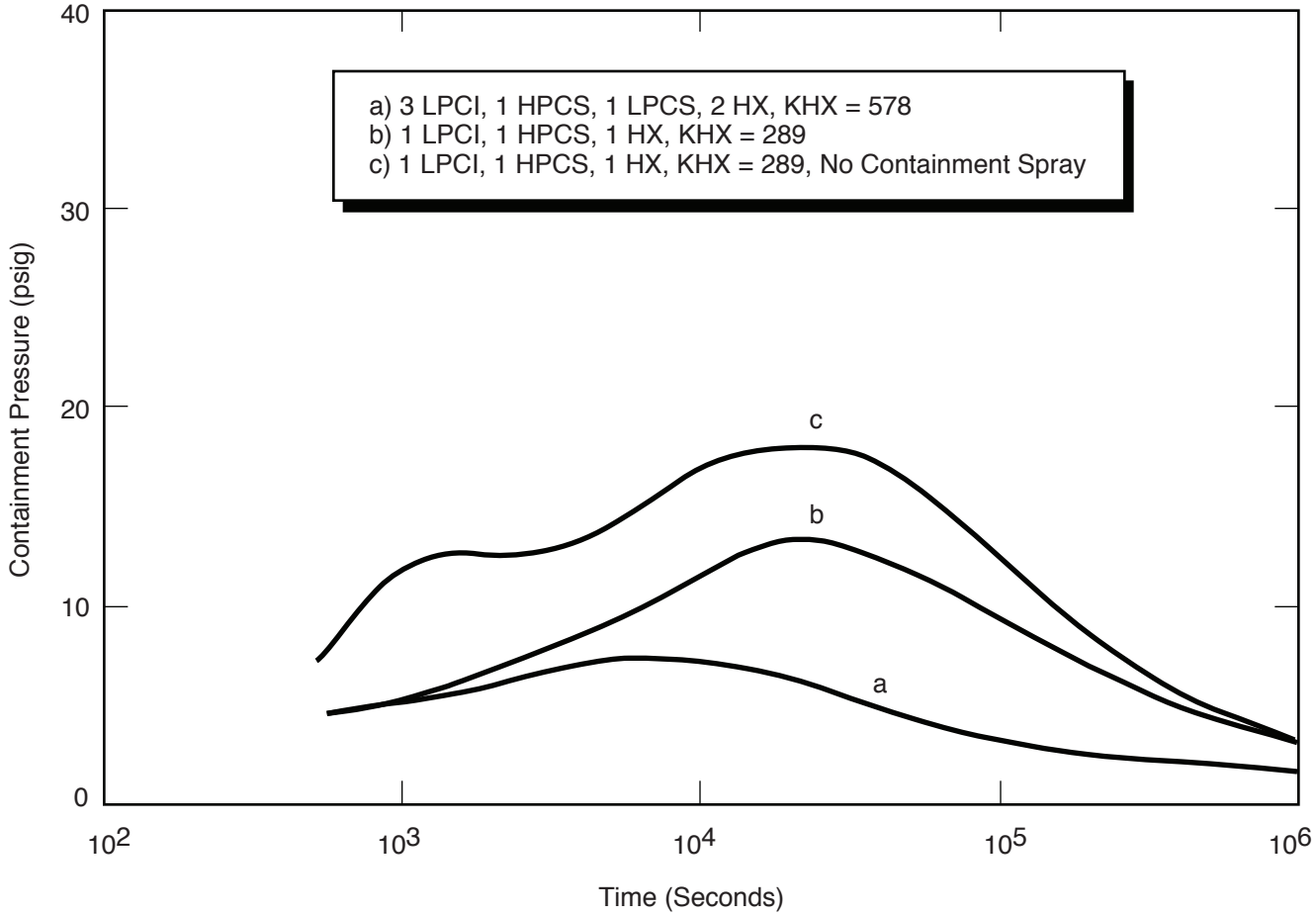

Columbia Generating Station Final Safety Analysis Report	**Containment Pressure Response Cases A, B, and C - Original Rated Power**		
	Draw. No. **960222.67**	Rev.	Figure **6.2-7**

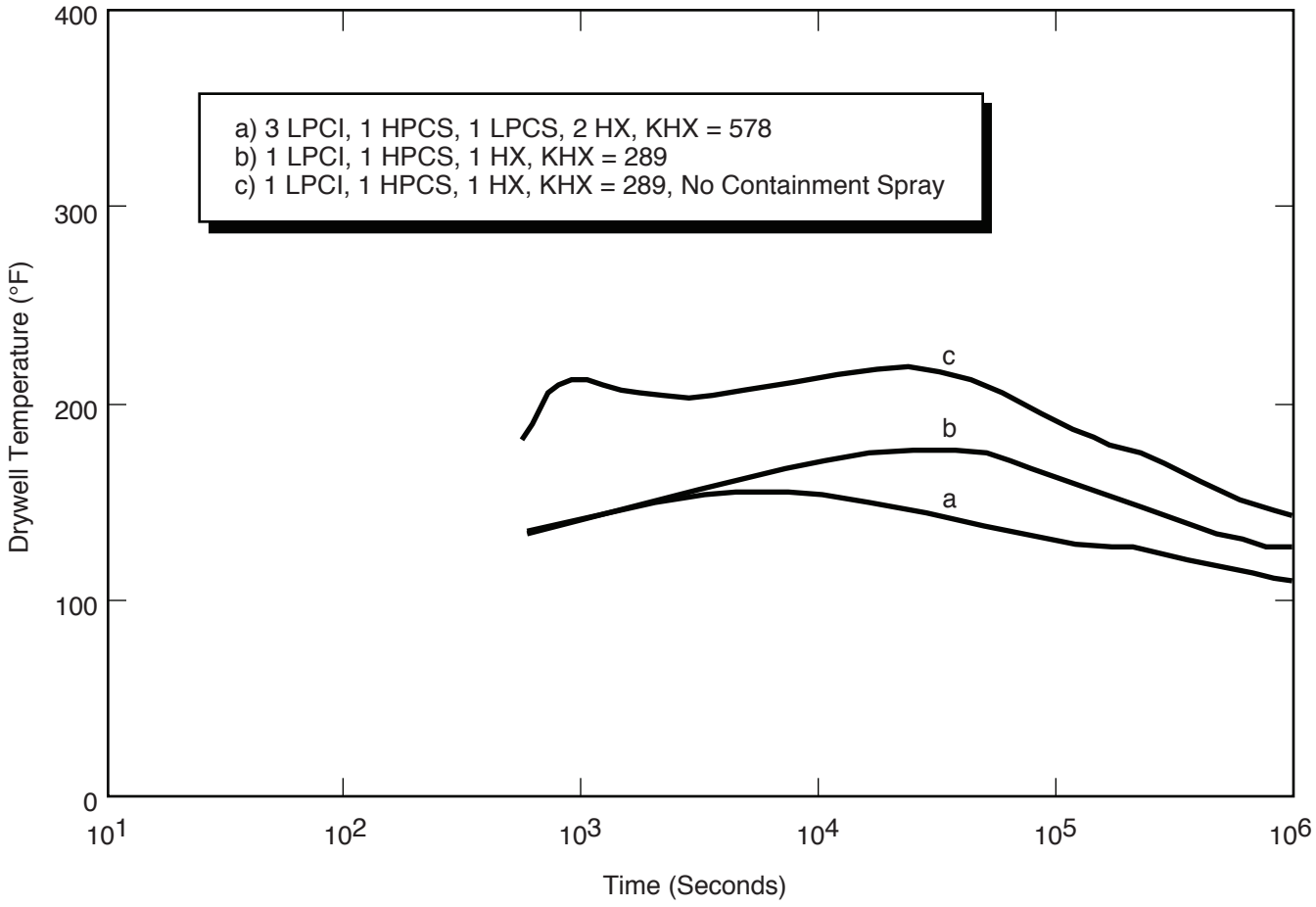

Columbia Generating Station Final Safety Analysis Report	**Drywell Temperature Response Cases A, B, and C - Original Rated Power**		
	Draw. No. **960222.26**	Rev.	Figure **6.2-8**

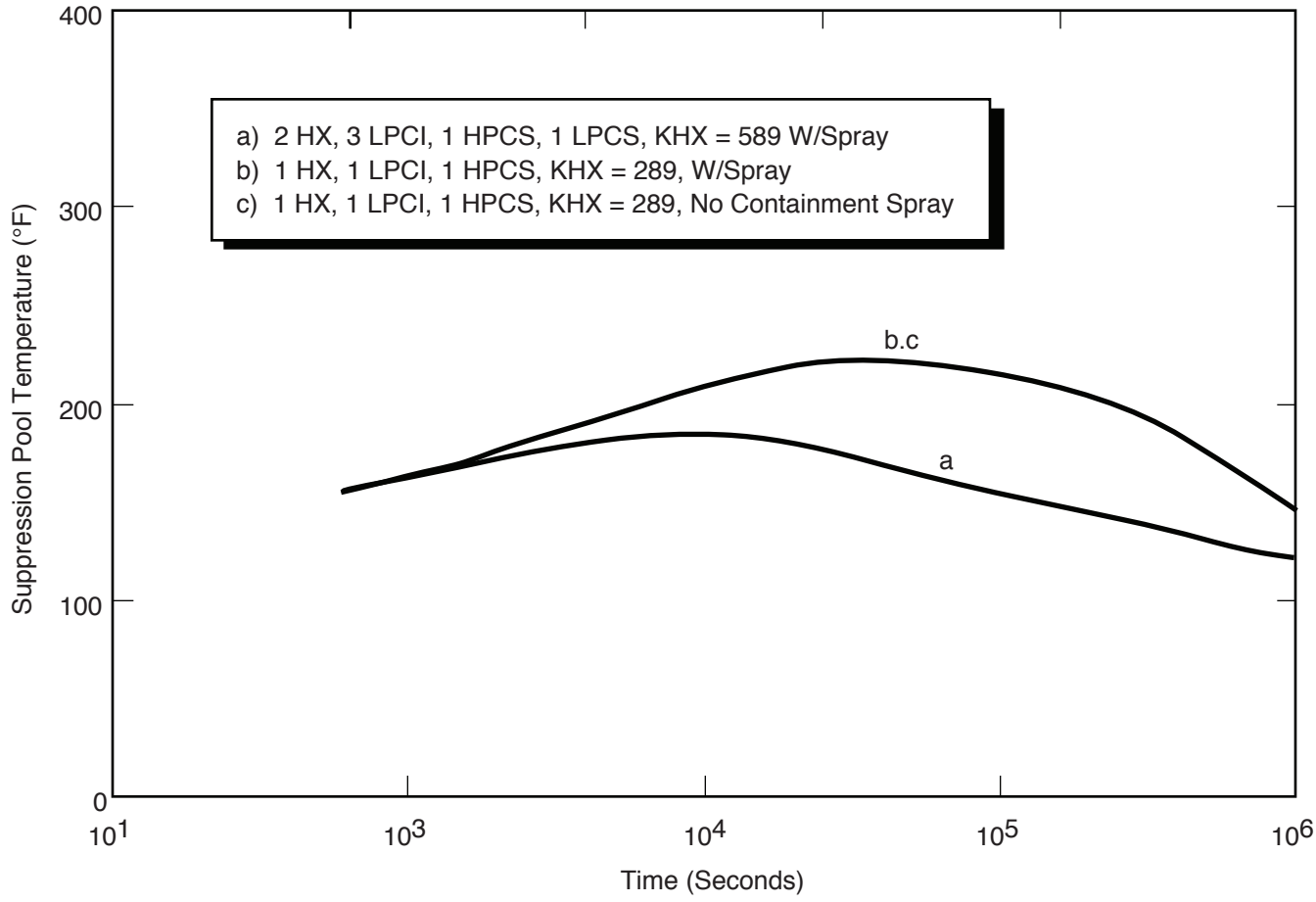

Columbia Generating Station Final Safety Analysis Report	**Suppression Pool Temperature Response, Long-Term Response - Original Rated Power**		
	Draw. No. **960222.27**	Rev.	Figure **6.2-9**

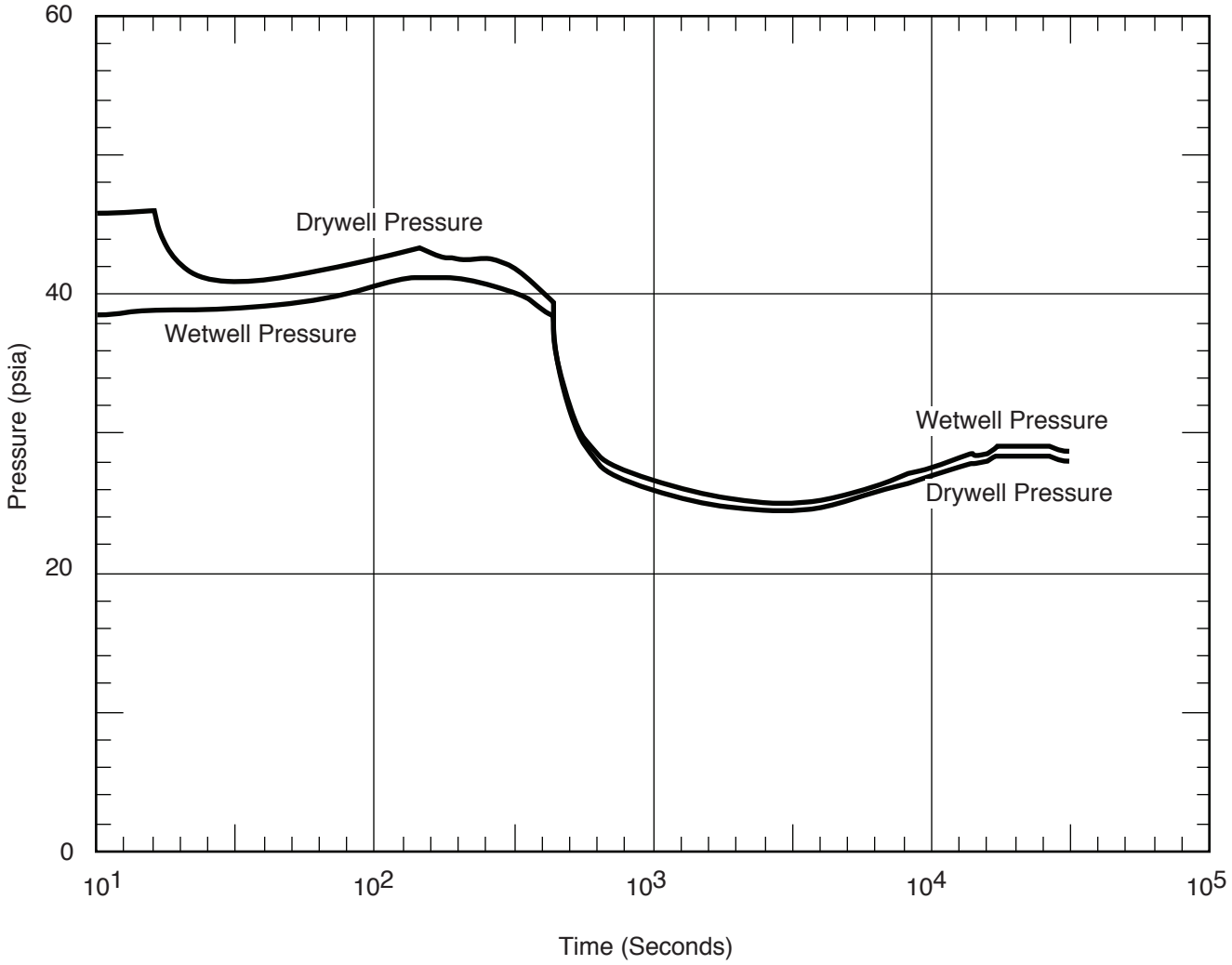

Columbia Generating Station **Final Safety Analysis Report**	**Containment Pressure Response - Case C** **Uprated Power**		
	Draw. No. **960222.05**	Rev.	Figure **6.2-10**

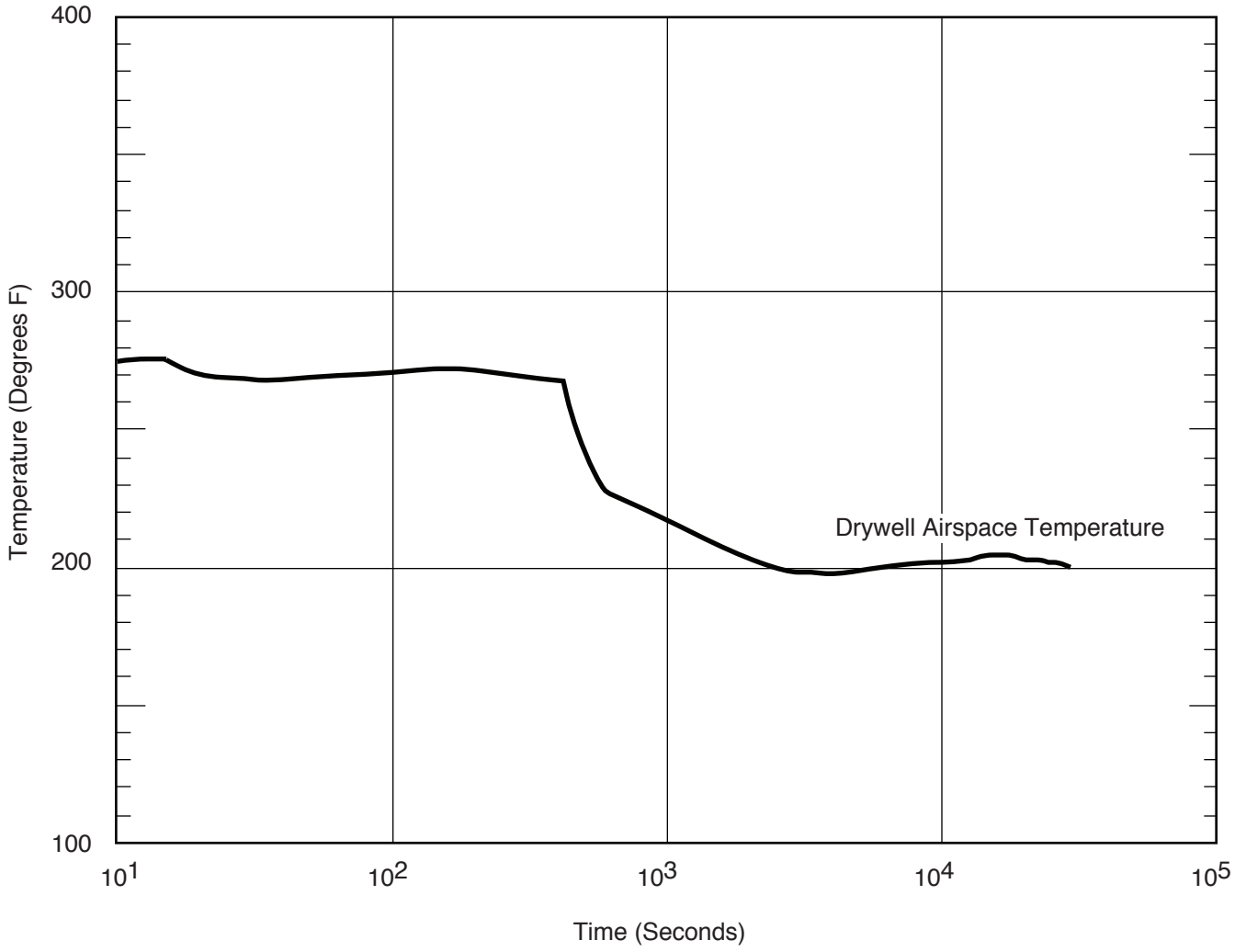

Columbia Generating Station **Final Safety Analysis Report**	**Drywell Temperature Response - Case C** **Uprated Power**		
	Draw. No. **960222.06**	Rev.	Figure **6.2-11**

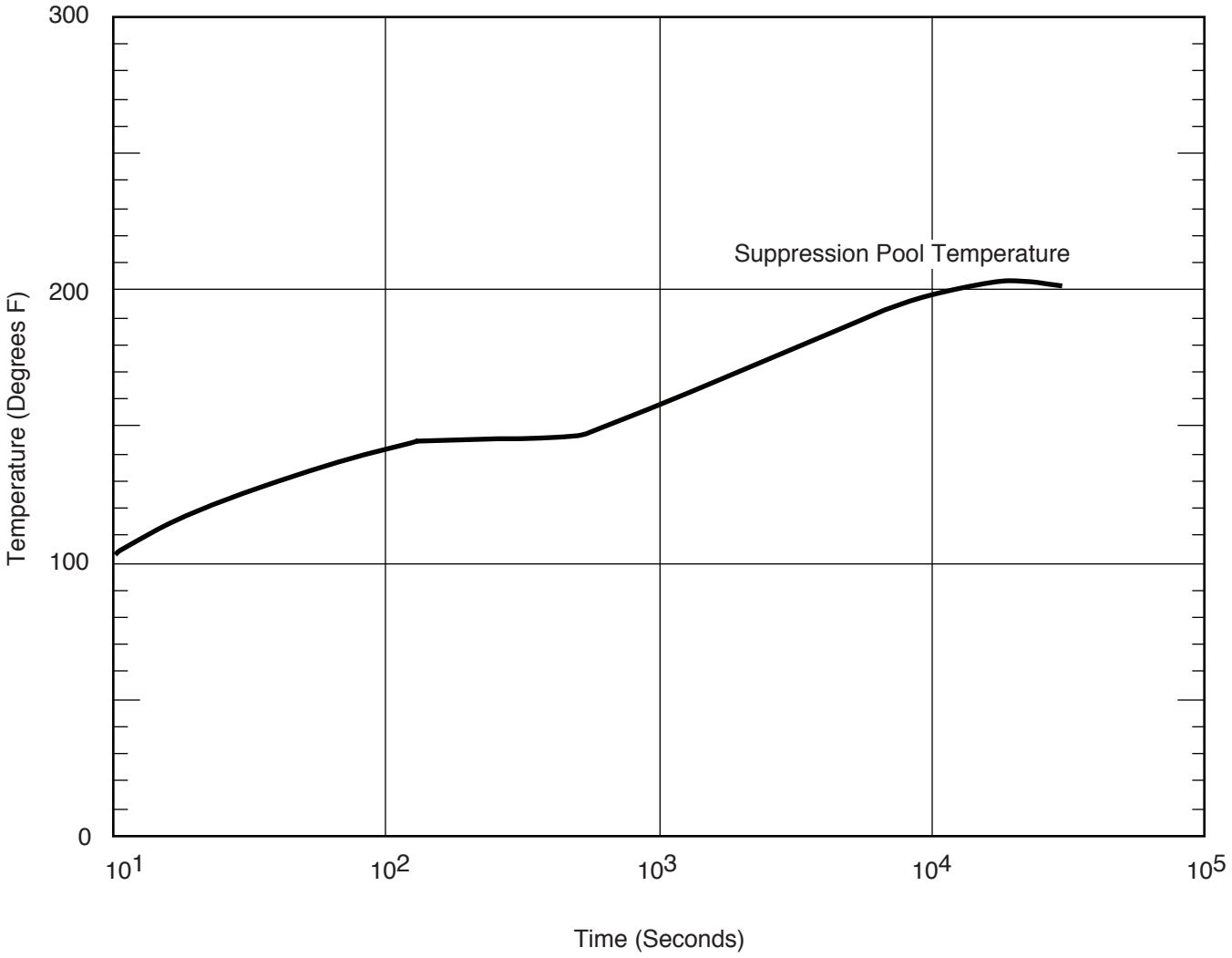

Columbia Generating Station **Final Safety Analysis Report**	**Suppression Pool Temperature Response - Case C** **Uprated Power**		
	Draw. No. **960222.07**	Rev.	Figure **6.2-12**

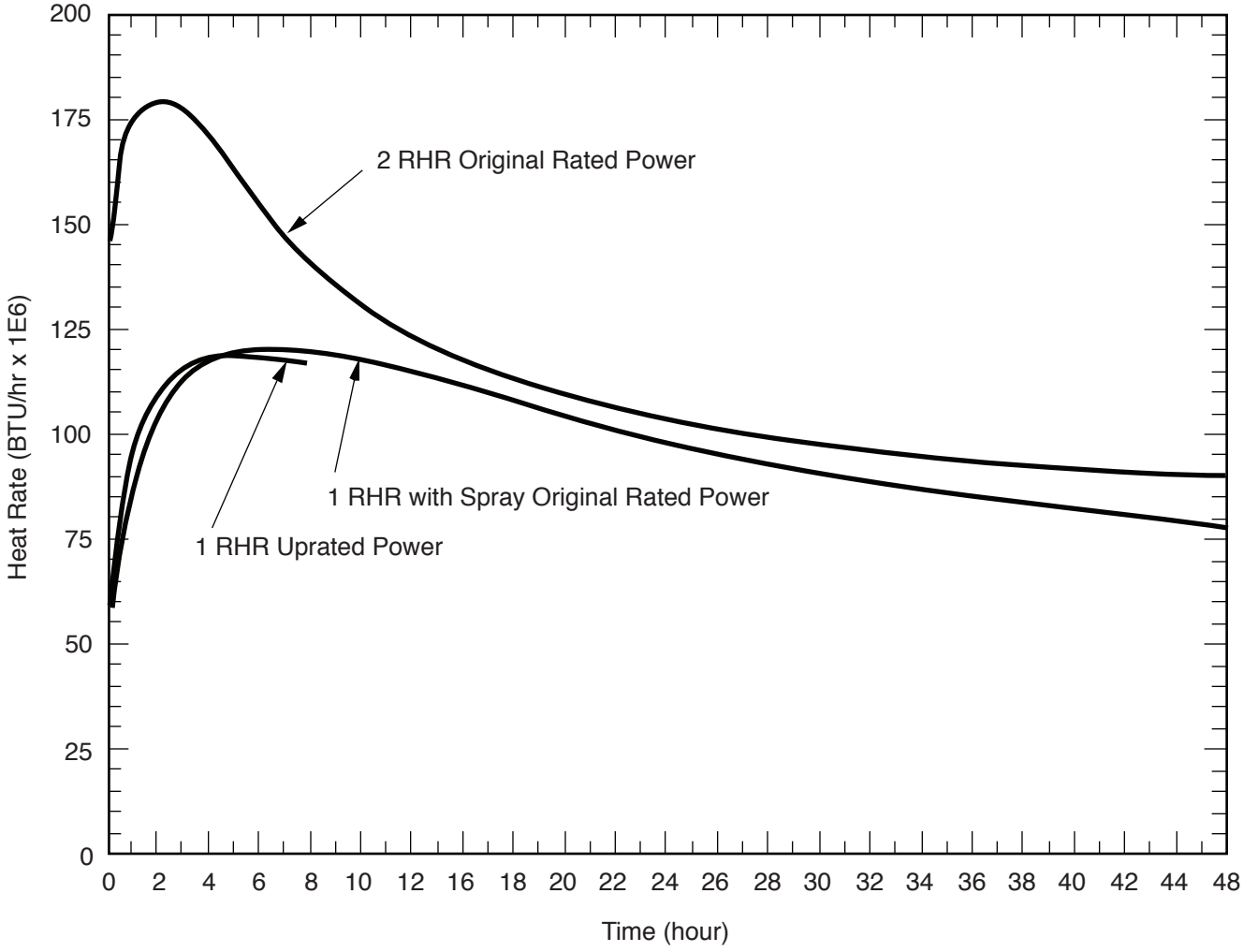

Columbia Generating Station **Final Safety Analysis Report**	**Residual Heat Removal Rate**		
	Draw. No. **960222.15**	Rev.	Figure **6.2-13**

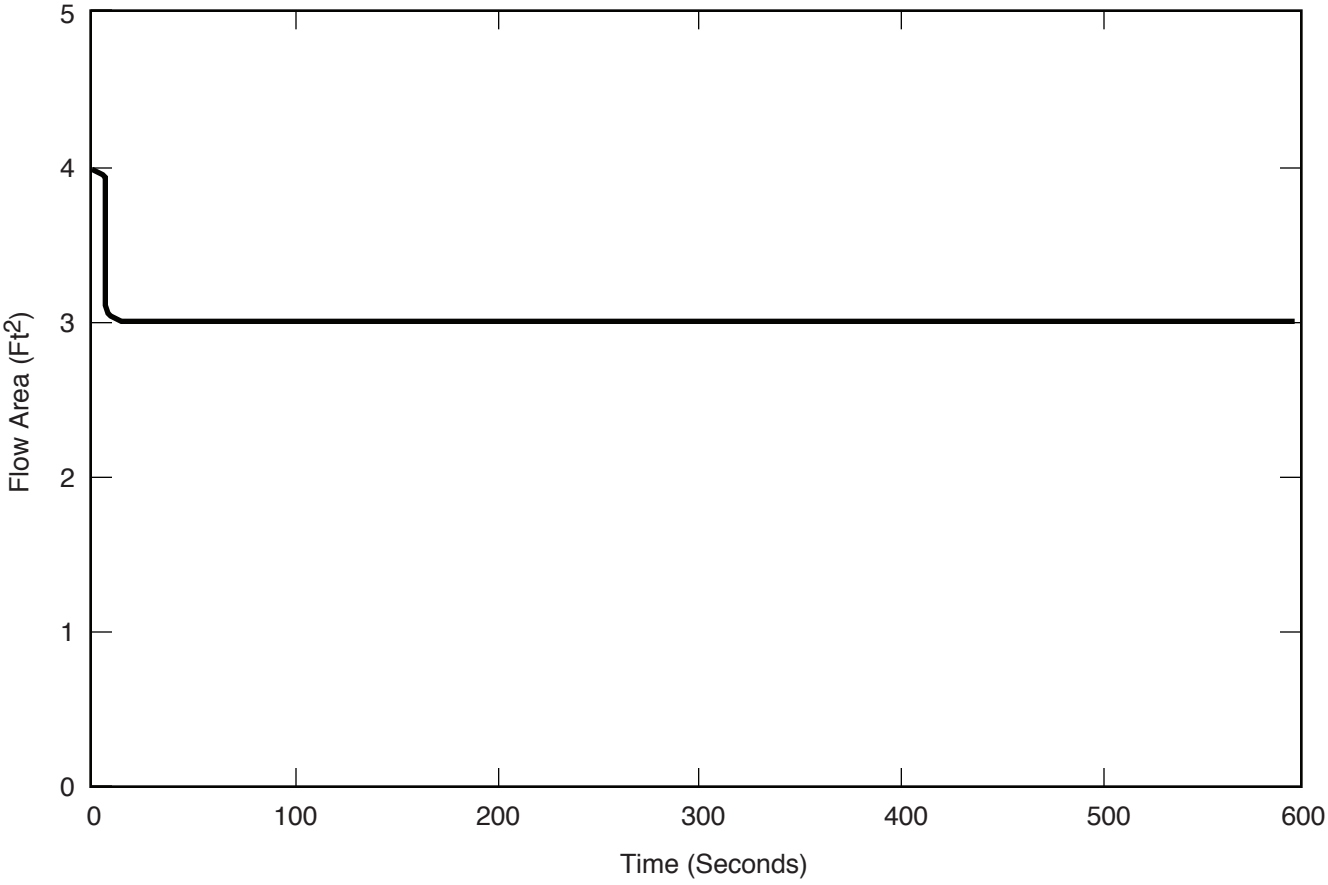

Columbia Generating Station **Final Safety Analysis Report**	**Effective Blowdown Area Main Steam Line Break**		
	Draw. No. **960222.28**	Rev.	Figure **6.2-14**

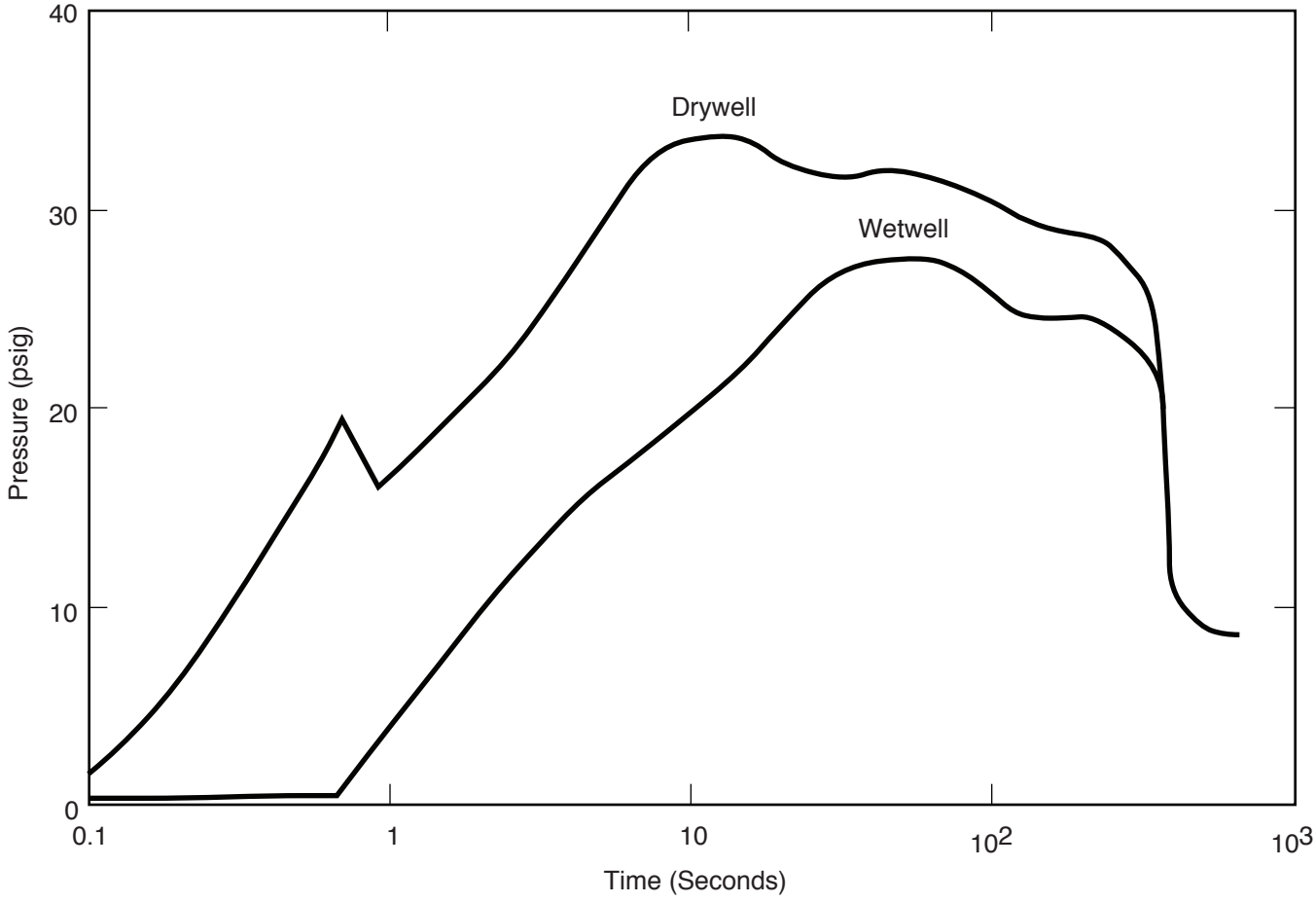

Columbia Generating Station Final Safety Analysis Report	**Bounding Pressure Response - Main Steam Line Break Original Rated Power**		
	Draw. No. **960222.30**	Rev.	Figure **6.2-15**

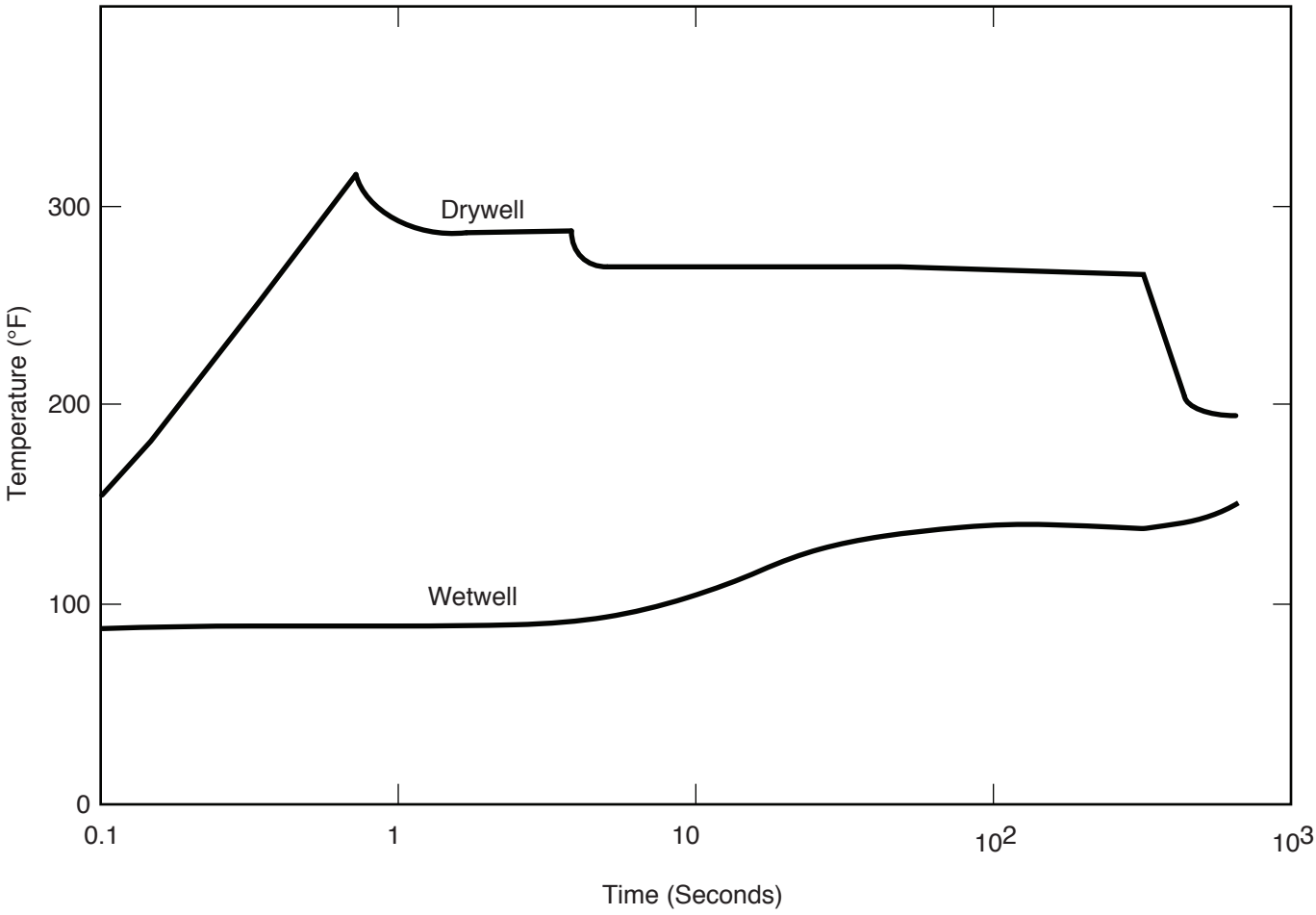

Columbia Generating Station **Final Safety Analysis Report**	**Bounding Temperature Response - Main Steam Line Break Original Rated Power**		
	Draw. No. **960222.29**	Rev.	Figure **6.2-16**

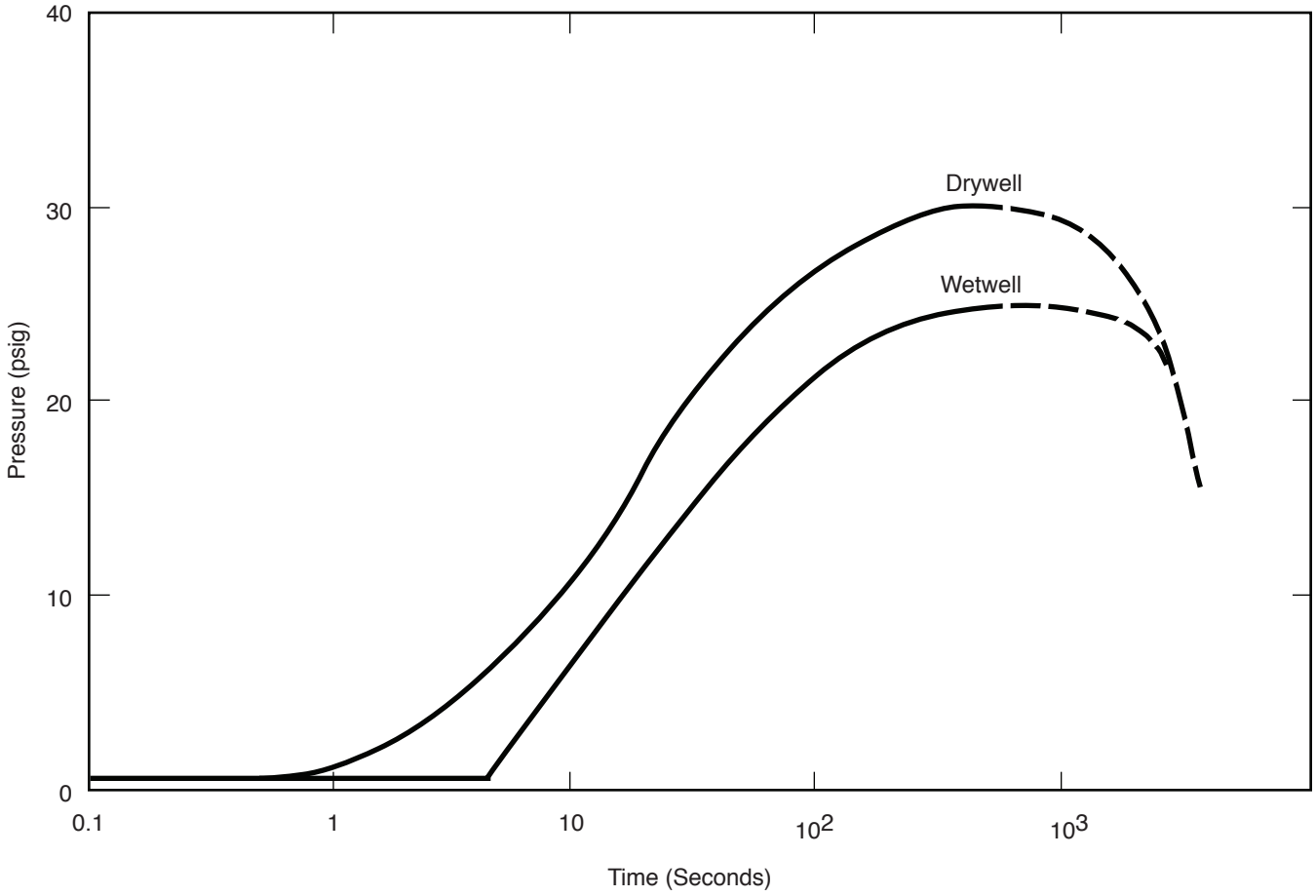

Columbia Generating Station **Final Safety Analysis Report**	**Pressure Response - Recirculation Line Break ($0.1\ ft^2$) Original Rated Power**		
	Draw. No. **960222.31**	Rev.	Figure **6.2-17**

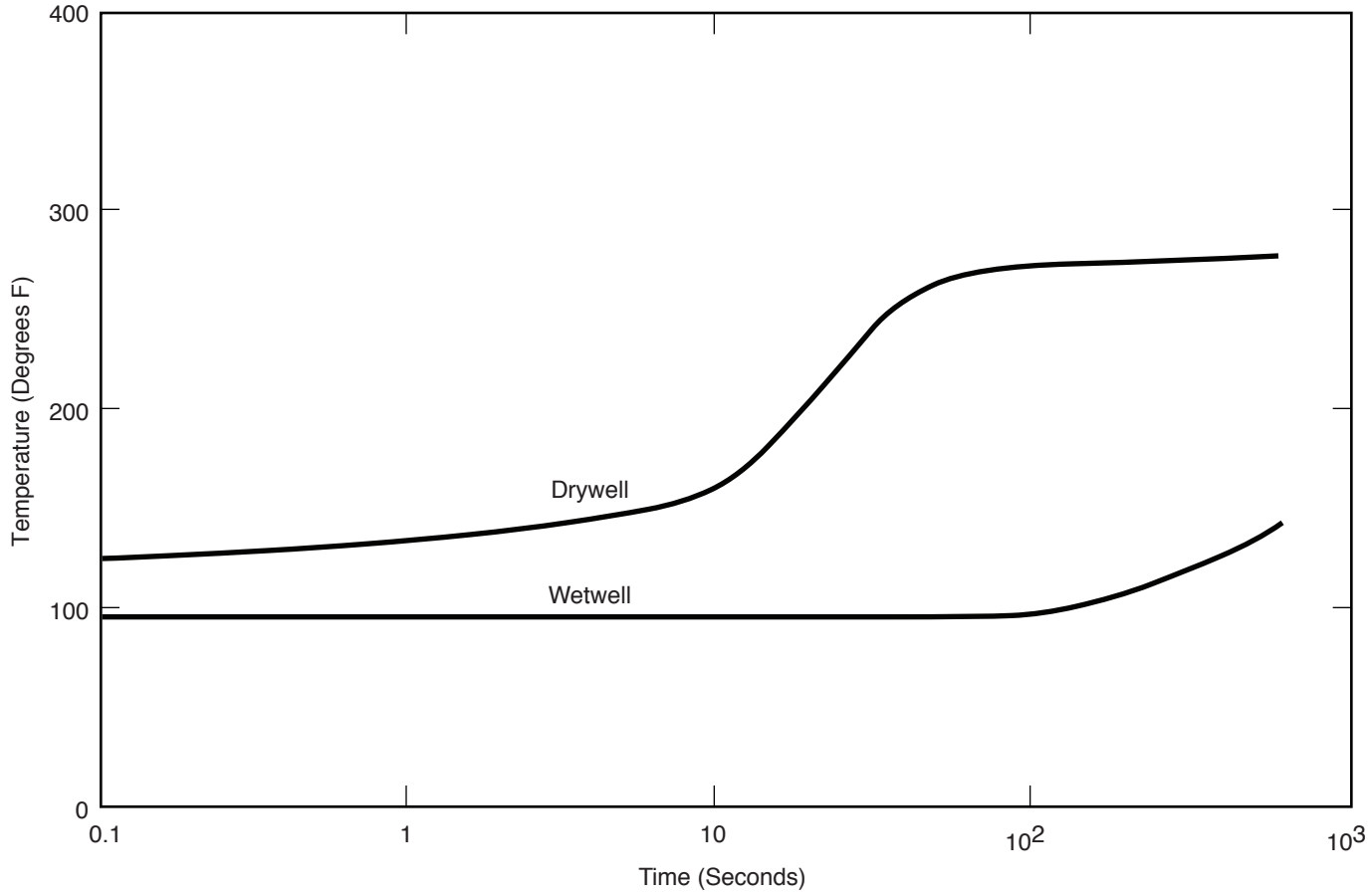

Columbia Generating Station **Final Safety Analysis Report**	**Temperature Response - Recirculation Line Break ($0.1\ ft^2$) Original Rated Power**		
	Draw. No. **960222.32**	Rev.	Figure **6.2-18**

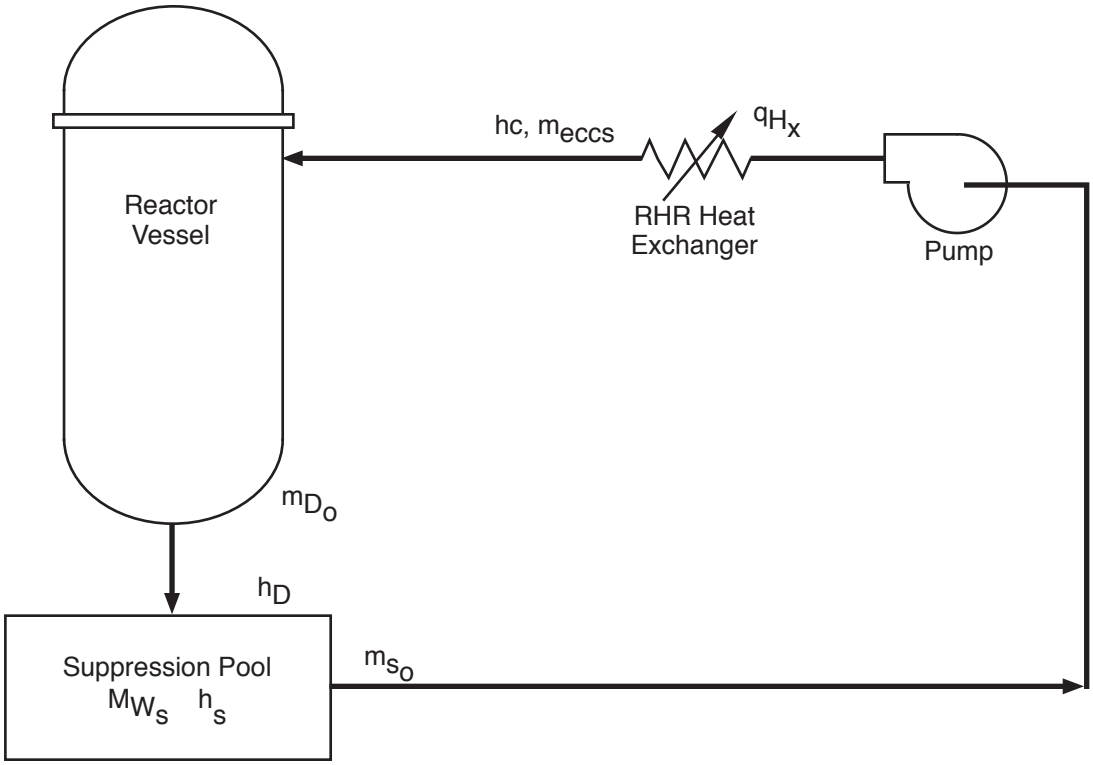

h_D	= Enthalpy Of Water Leaving Reactor, Btu/Lb
m_{D_o}	= Flow Rate Out Of Reactor, Lb/Sec
h_s	= Enthalpy Of Water In Suppresion Pool, Btu/Lb
m_{s_o}	= Flow Out Of Suppression Pool, Lb/Sec
q_{H_x}	= Heat Removal Rate Of Heat Exchanger, Btu/Sec
M_{W_s}	= Mass Of Water In Suppression Pool
q_D	= Core Decay Heat Rate, Btu/Sec
q_e	= Stored Energy Release Rate, Btu/Sec
h_c	= Enthalpy Of ECCS Flow To Reactor, Btu/Lb
m_{eccs}	= ECCS Flow Rate, Lb/Sec

Columbia Generating Station
Final Safety Analysis Report

Schematic of ECCS Loop

Draw. No. **900547.39** | Rev. | Figure **6.2-19**

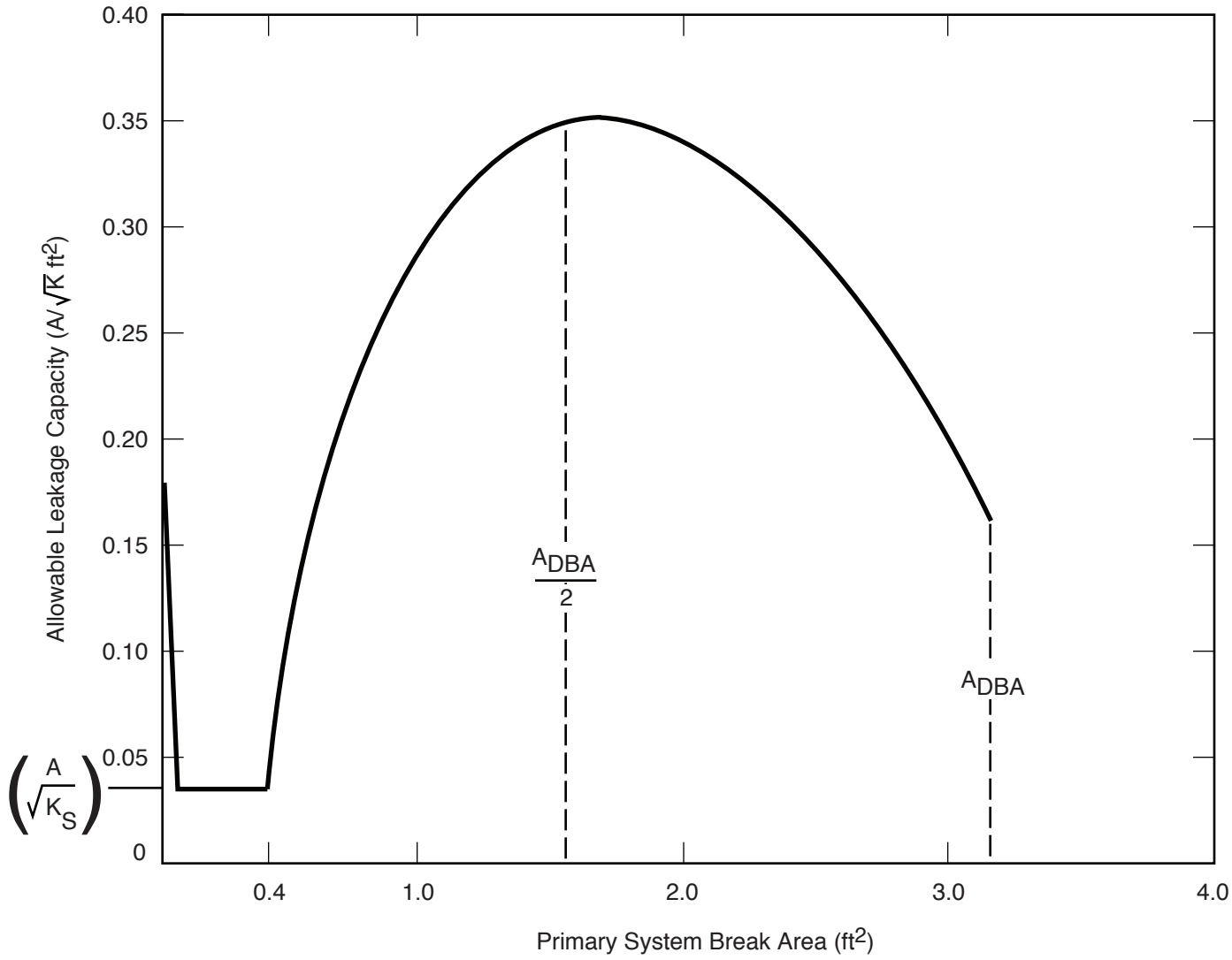

Columbia Generating Station Final Safety Analysis Report	Allowable Leakage Capacity		
	Draw. No. 960222.39	Rev.	Figure 6.2-20

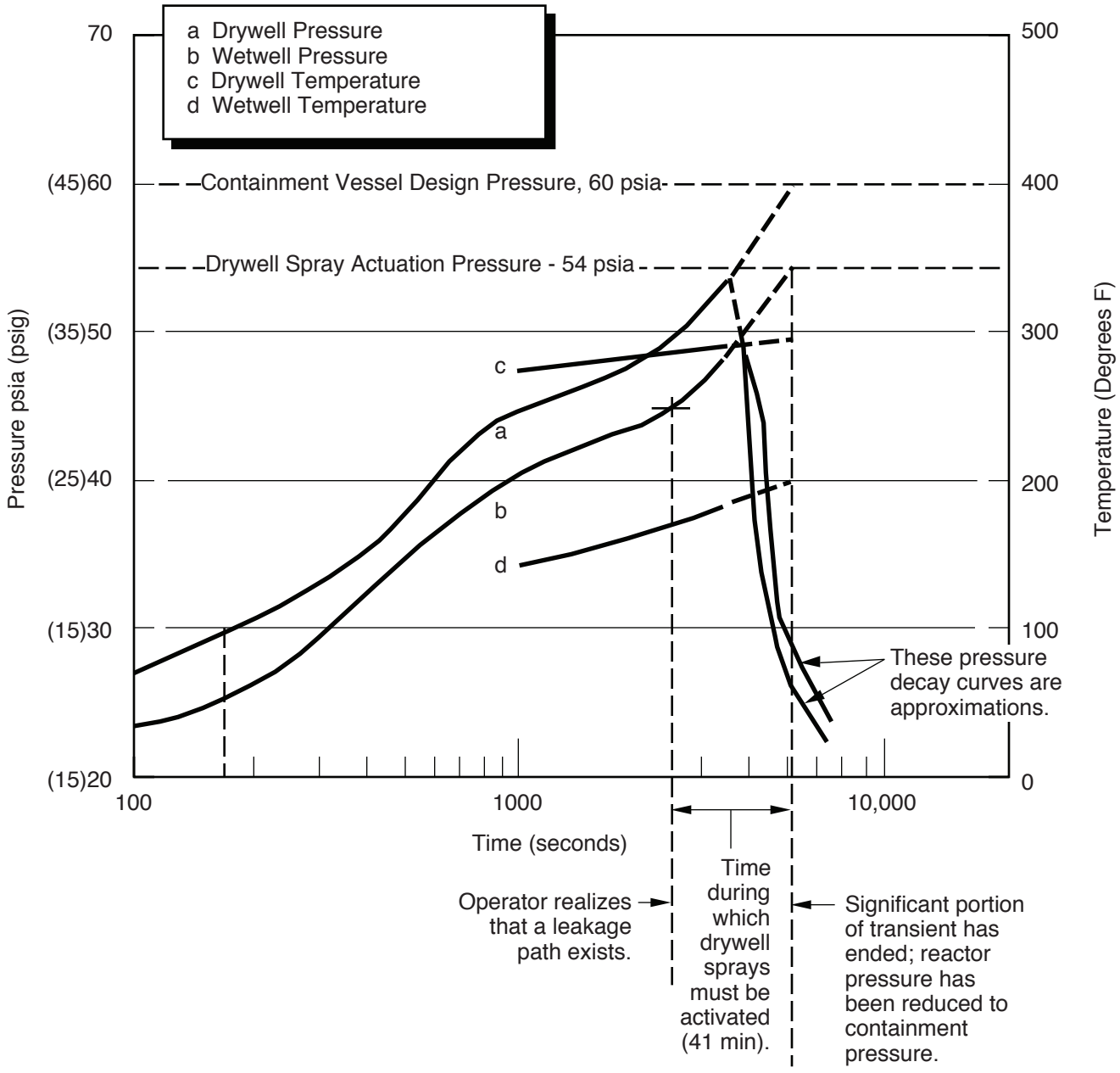

Columbia Generating Station Final Safety Analysis Report	**Containment Transient for Maximum Allowable Bypass Capacity $A\sqrt{\bar{x}} = 0.050$**		
	Draw. No. **960222.38**	Rev.	Figure **6.2-21**

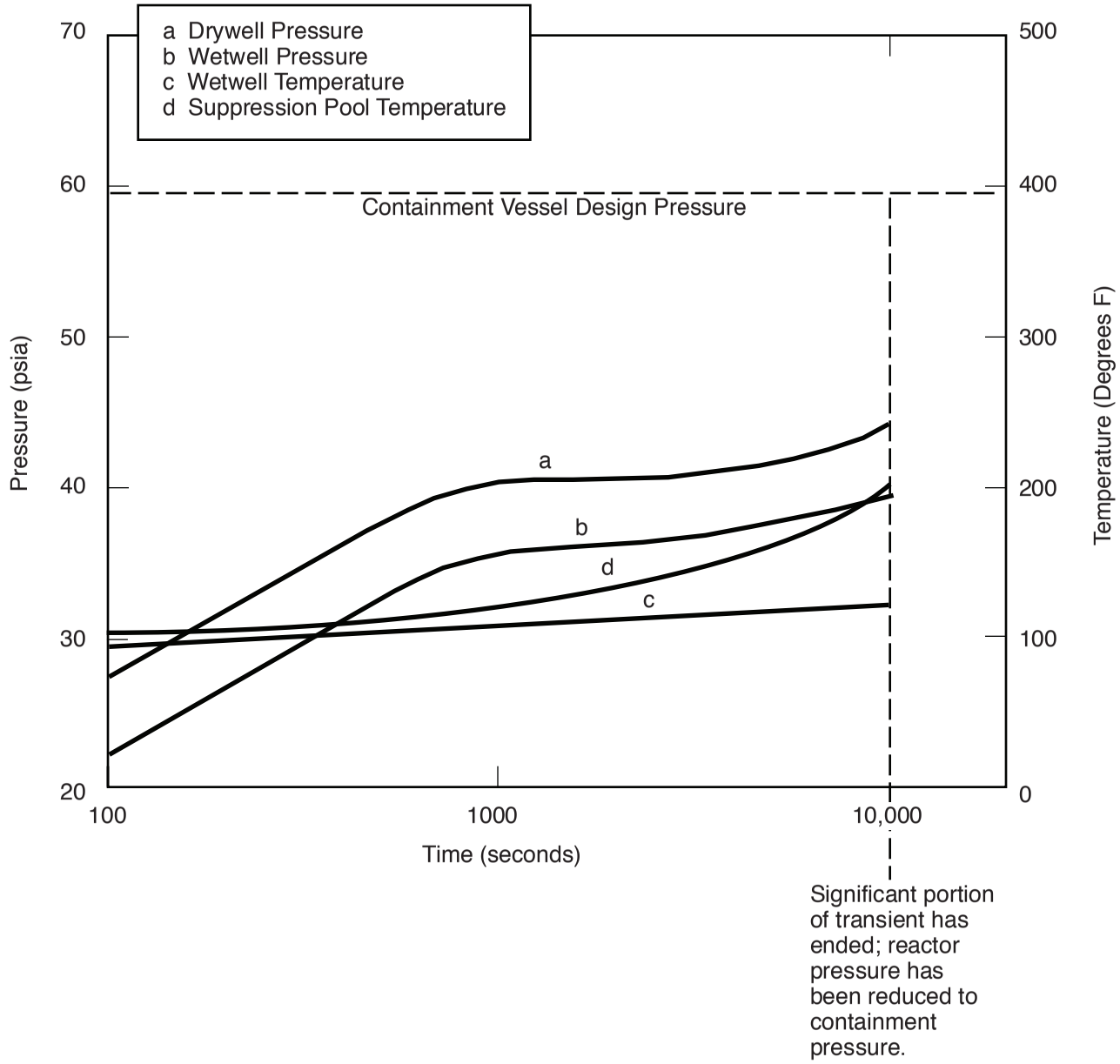

Columbia Generating Station Final Safety Analysis Report	**Containment Transient for $A/\sqrt{K} = 0.0045$ ft^2**		
	Draw. No. **960222.37**	Rev.	Figure **6.2-22**

Upper/Lower Bulkhead Plate Venting

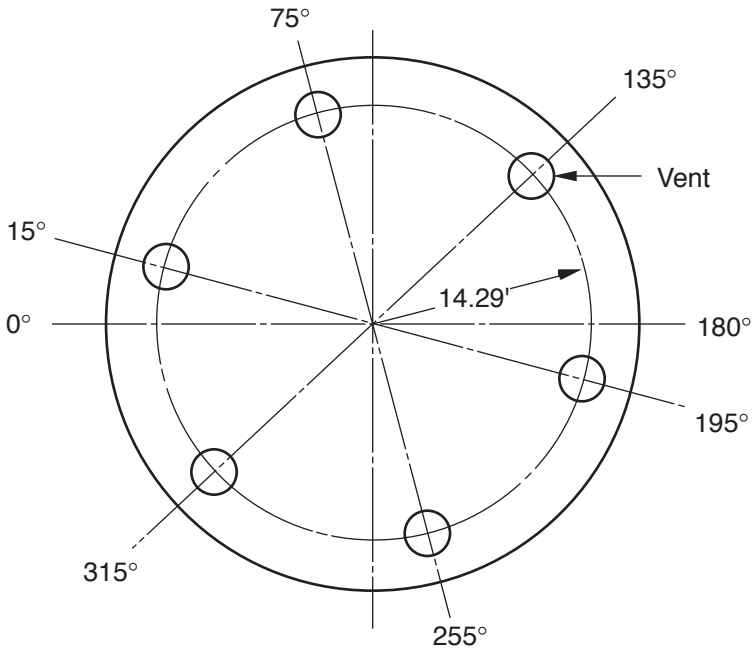

Plan View of Bulkhead Plate

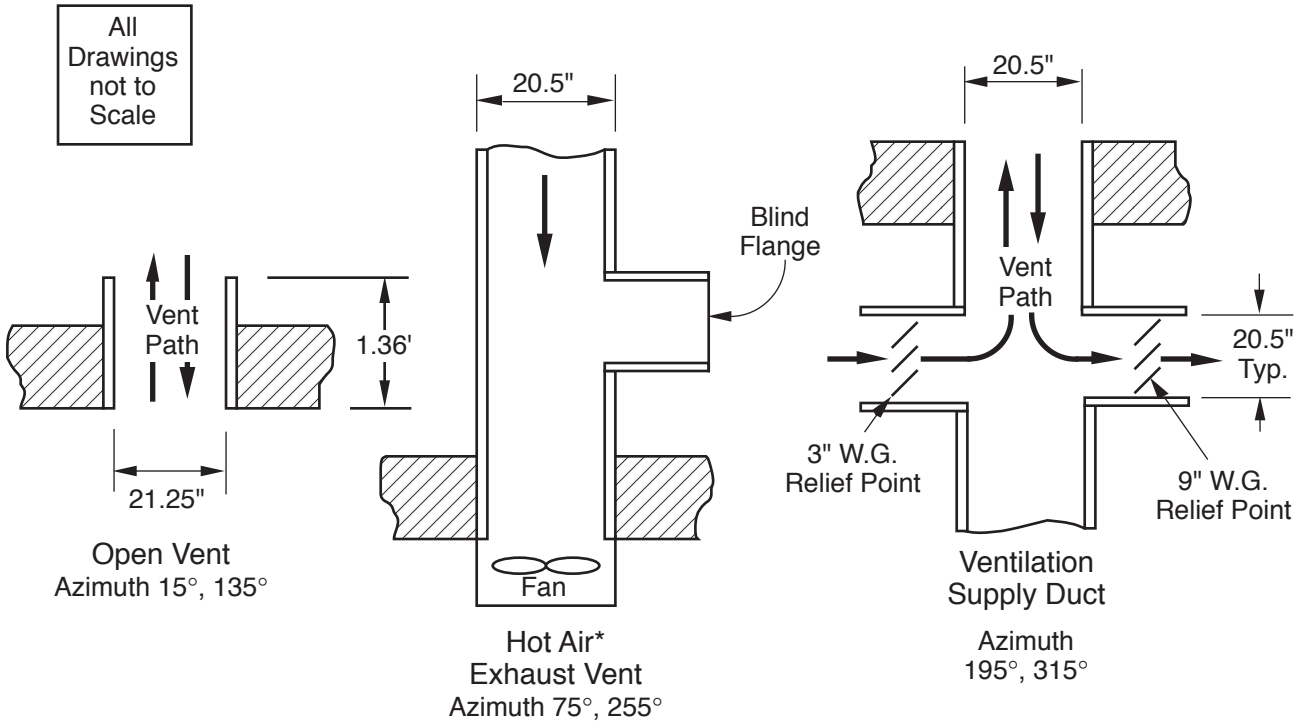

*Not Used in Compartment Pressure Analysis of Upper Head Region

Columbia Generating Station Final Safety Analysis Report	**Venting Through Bulkhead Plate**		
	Draw. No. 920843.15	Rev.	Figure 6.2-24

Form No. 960690

Absolute Pressure in the Drywell Above and Below the Bulkhead Plate from a 6 Inch RCIC Line Break

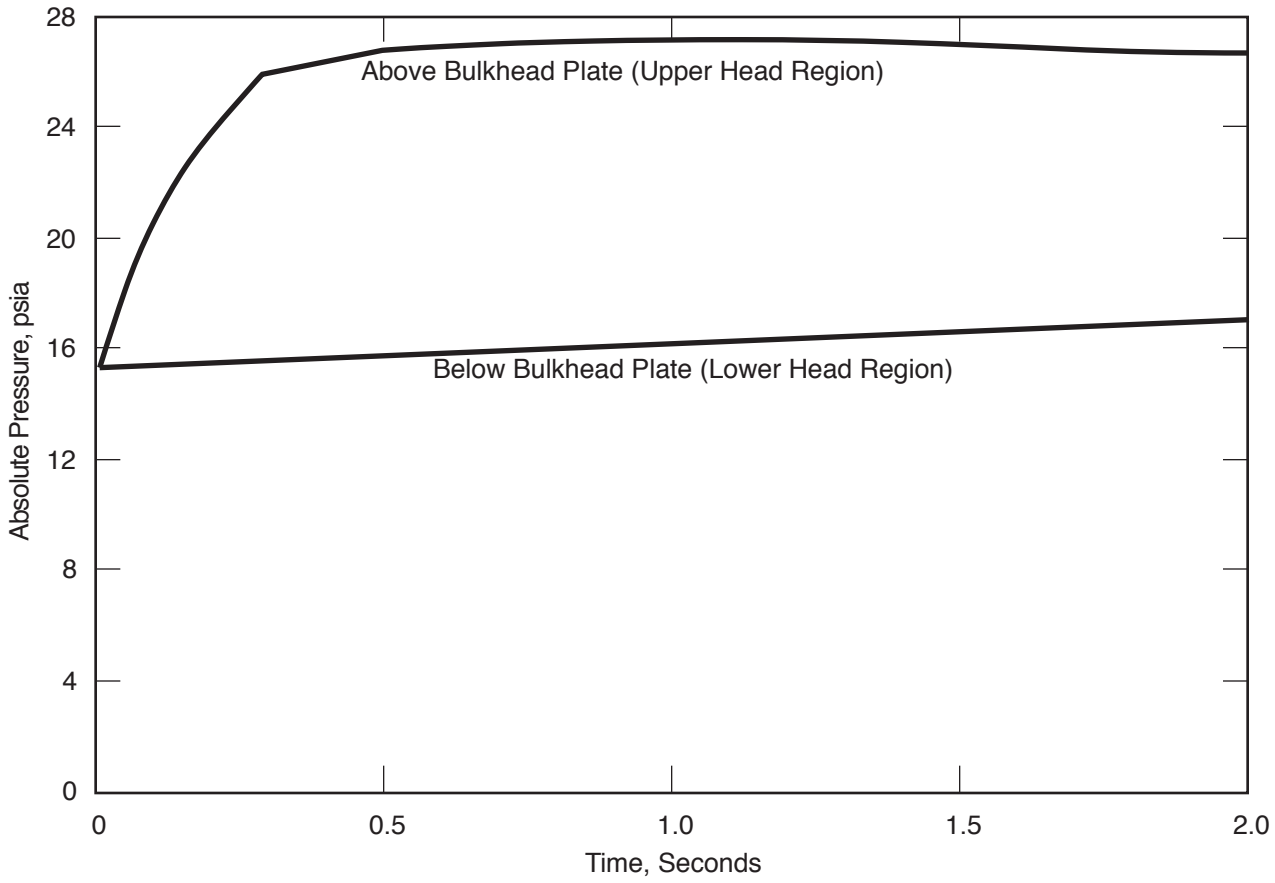

Columbia Generating Station Final Safety Analysis Report	Absolute Pressure in Upper Head Region and Lower Region from 6 in. RCIC Line Break		
	Draw. No. 920843.11	Rev.	Figure 6.2-25

Absolute Pressure in the Drywell Above and Below the Bulkhead Plate from a 24 Inch Recirculation Line Break

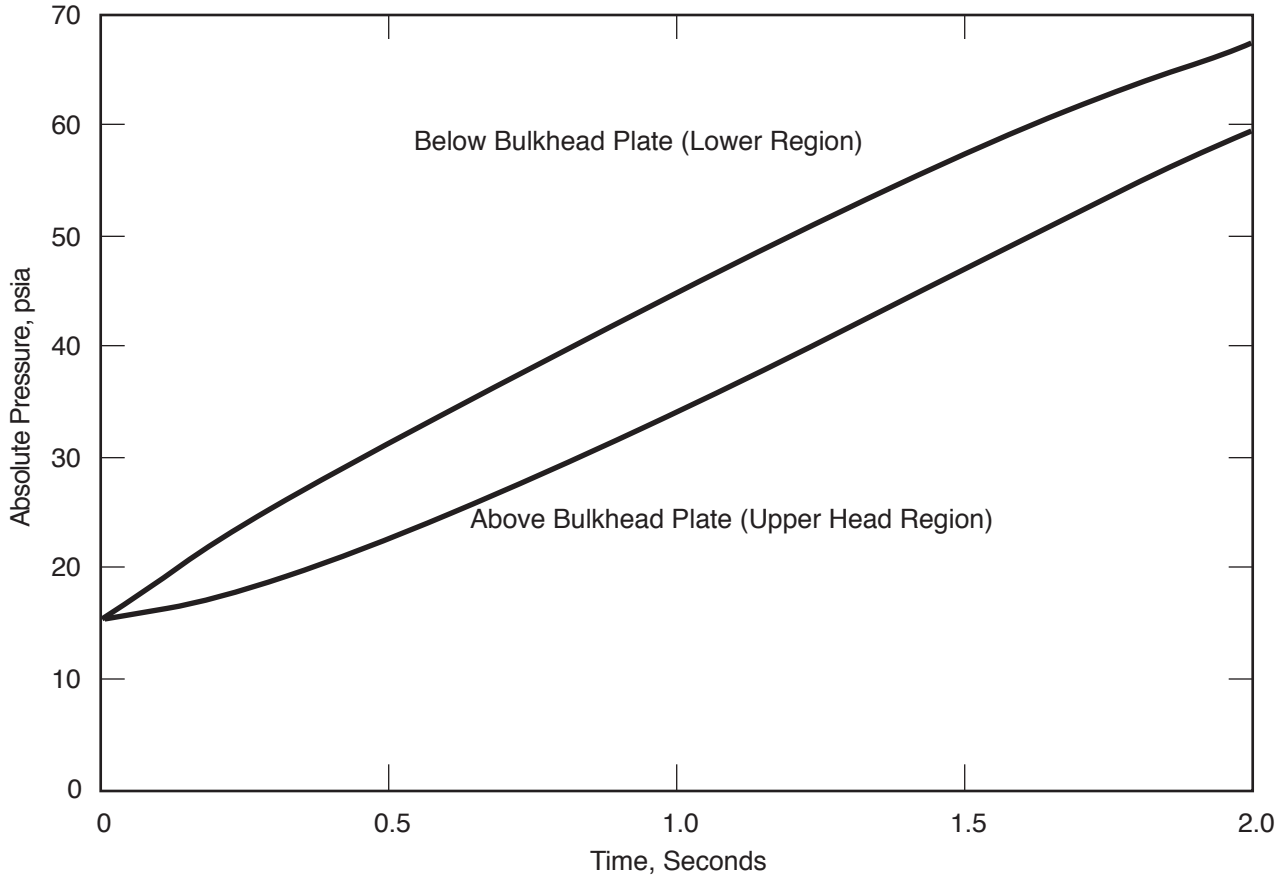

Columbia Generating Station Final Safety Analysis Report	Absolute Pressure in Lower Region and Upper Head Region from 24 in. Recirculation Line Break		
	Draw. No. 920843.12	Rev.	Figure 6.2-26

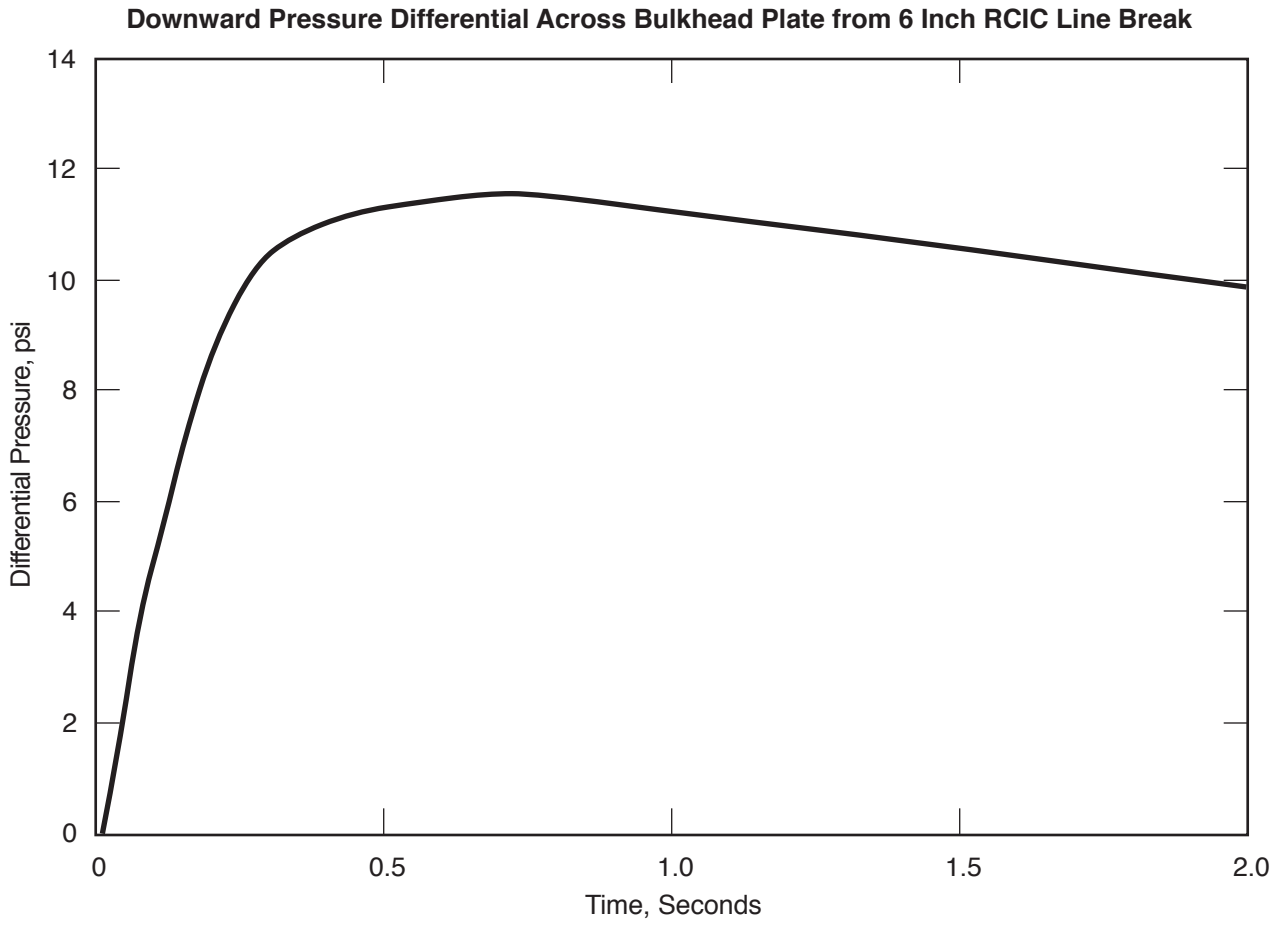

Columbia Generating Station Final Safety Analysis Report	Downward Pressure Differential Across Bulkhead Plate from 6 In. Line Break		
	Draw. No. 920843.13	Rev.	Figure 6.2-27

Upward Pressure Differential Across Bulkhead Plate from a 24 Inch Recirculation Line Break

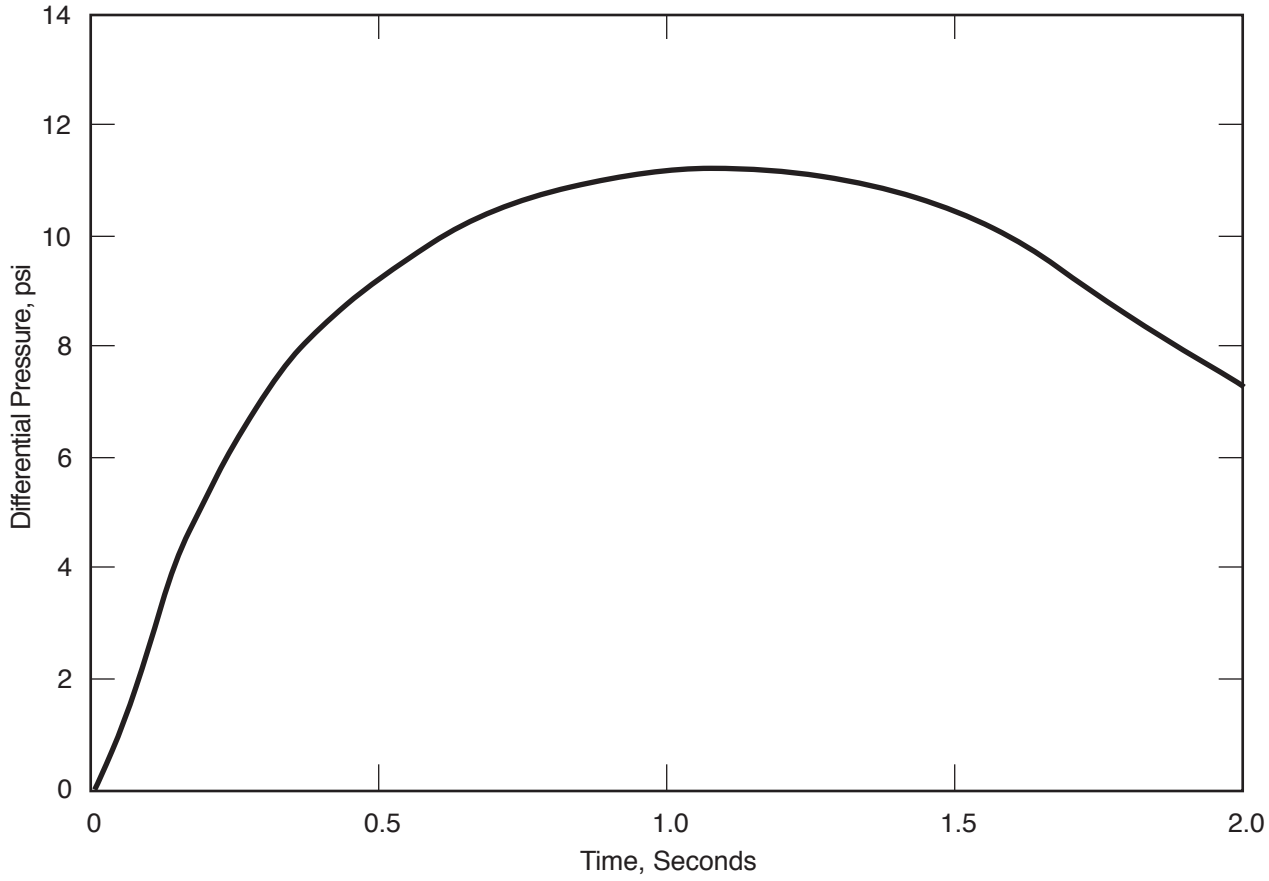

Columbia Generating Station Final Safety Analysis Report	Upward Pressure Differential Across Bulkhead Plate from 24 In. Recirculation Line Break		
	Draw. No. 920843.14	Rev.	Figure 6.2-28

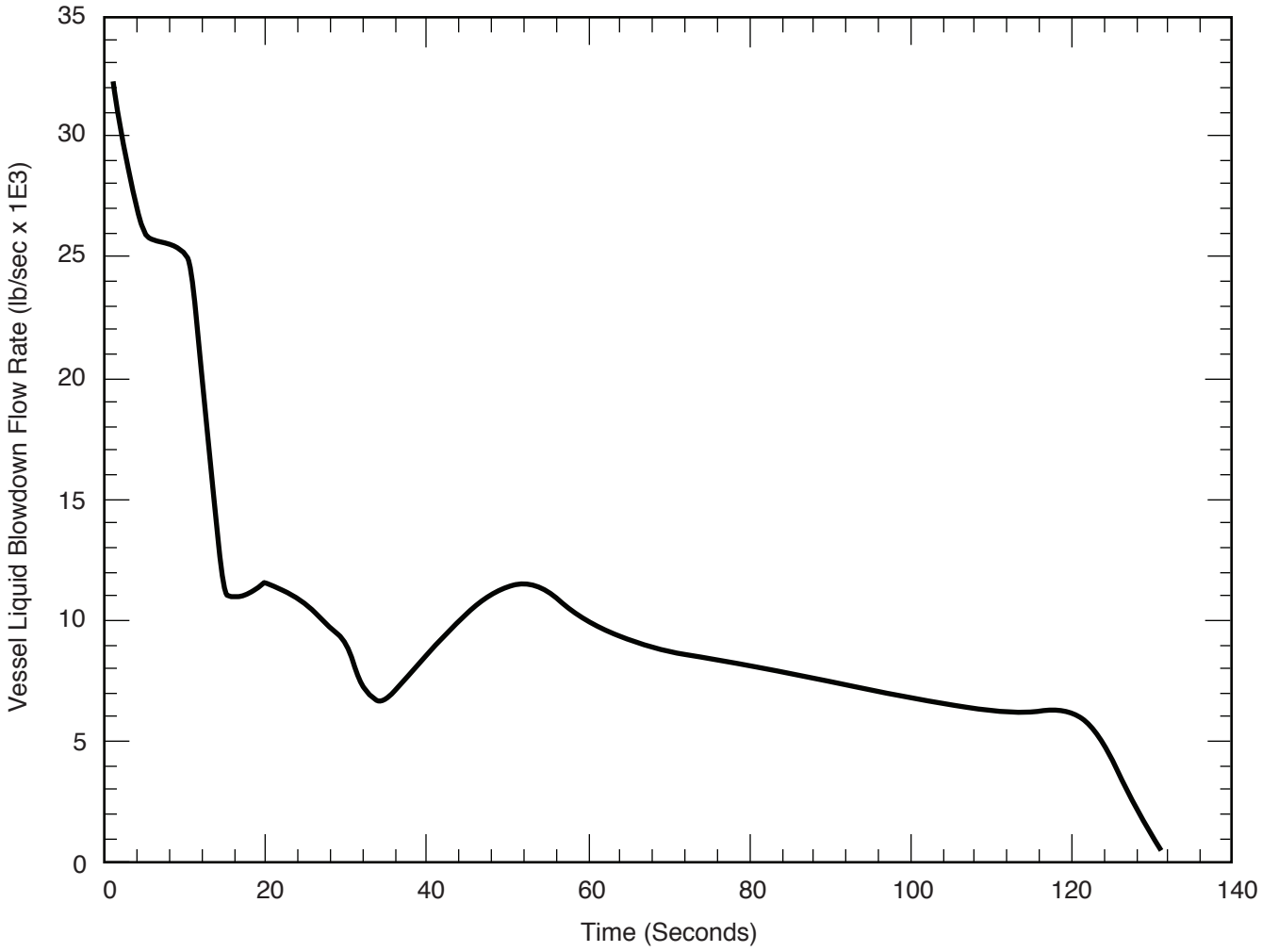

Columbia Generating Station Final Safety Analysis Report	**Recirculation Break Blowdown Flow Rates Liquid Flow - Short-Term Original Rated Power**		
	Draw. No. **960222.10**	Rev.	Figure **6.2-29**

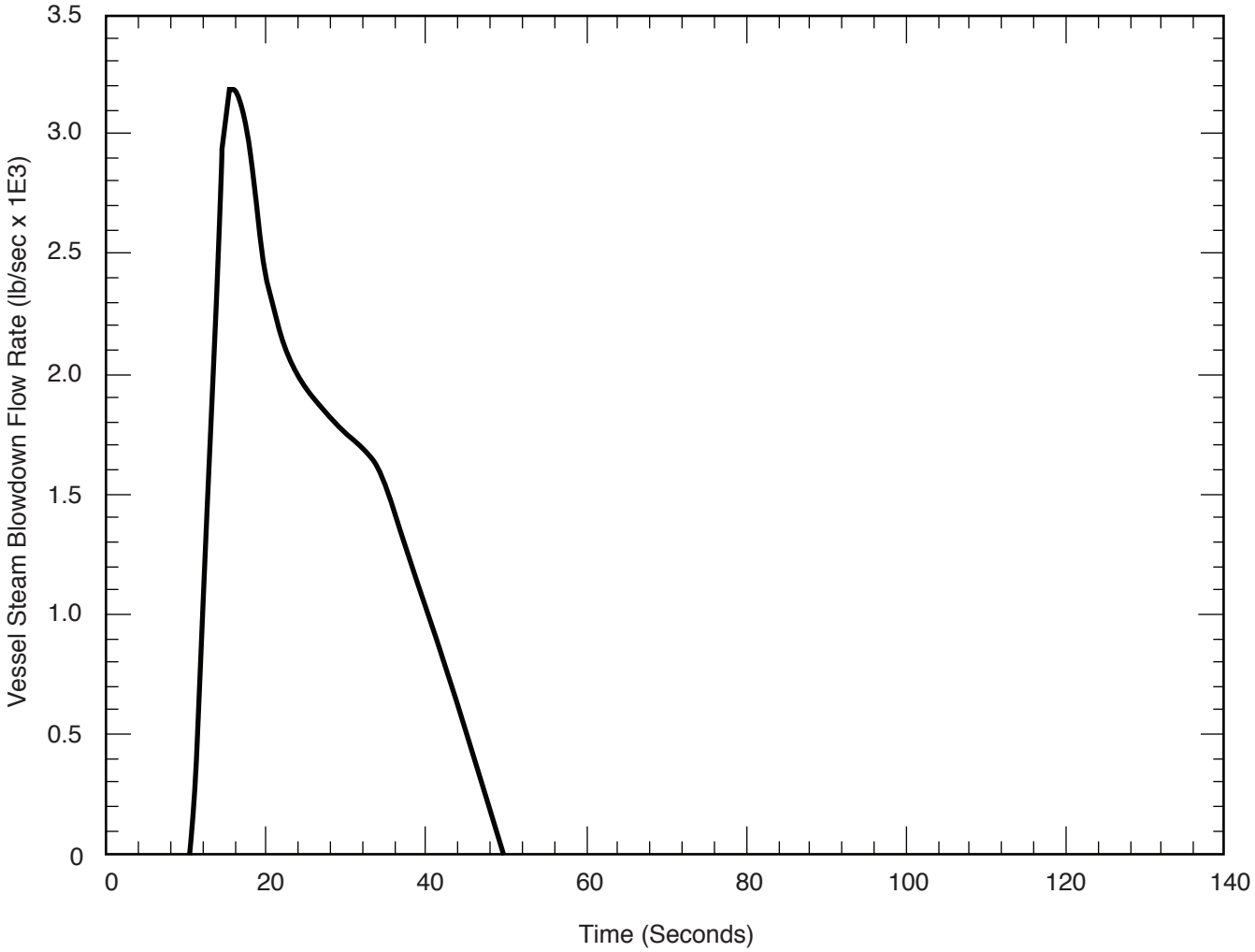

Columbia Generating Station Final Safety Analysis Report	**Recirculation Break Blowdown Flow Rates Steam Flow - Short-Term Original Rated Power**		
	Draw. No. **960222.11**	Rev.	Figure **6.2-30**

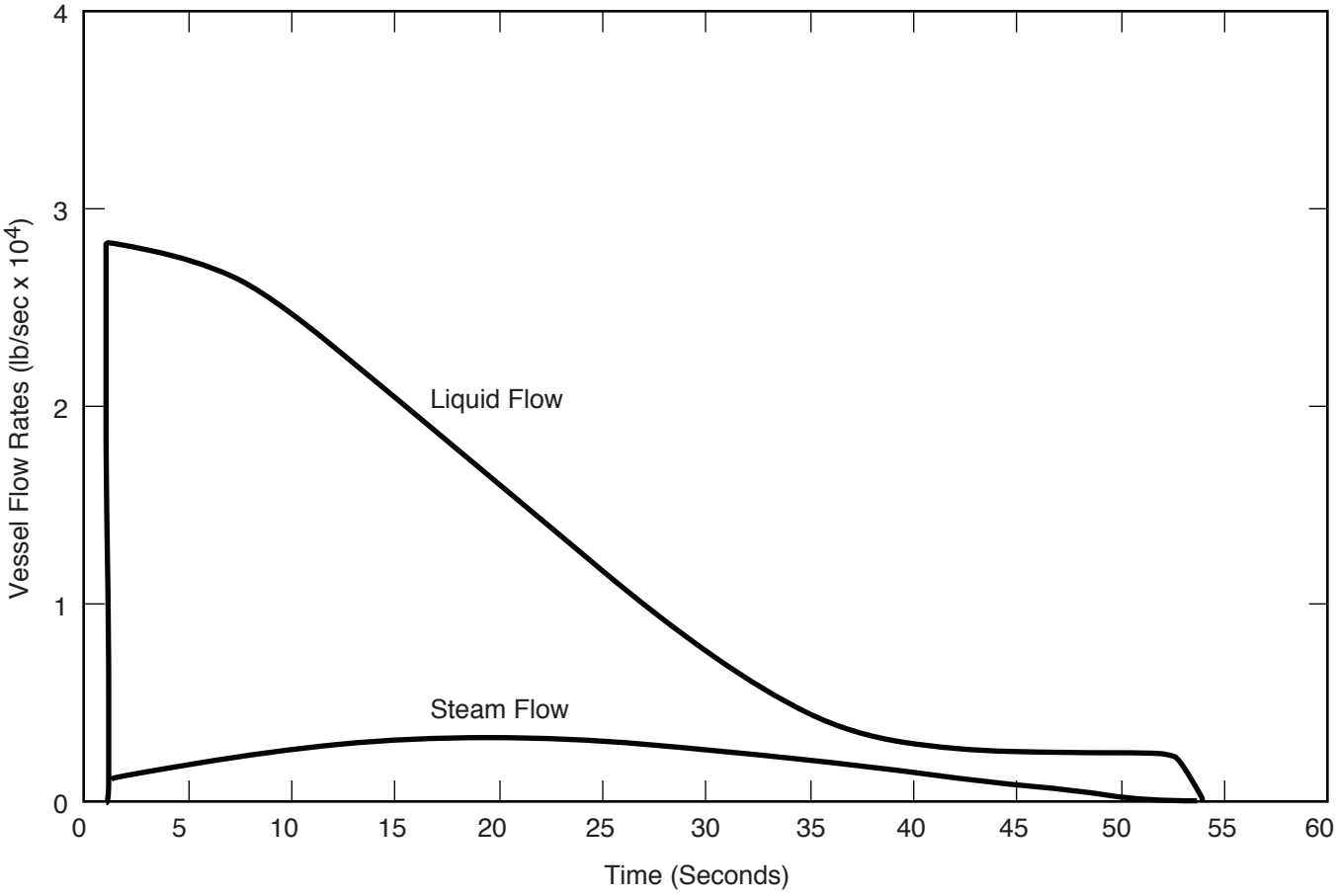

Columbia Generating Station
Final Safety Analysis Report

Main Steam Line Break Blowdown Flow Rates

Draw. No. 960222.36	Rev.	Figure 6.2-31

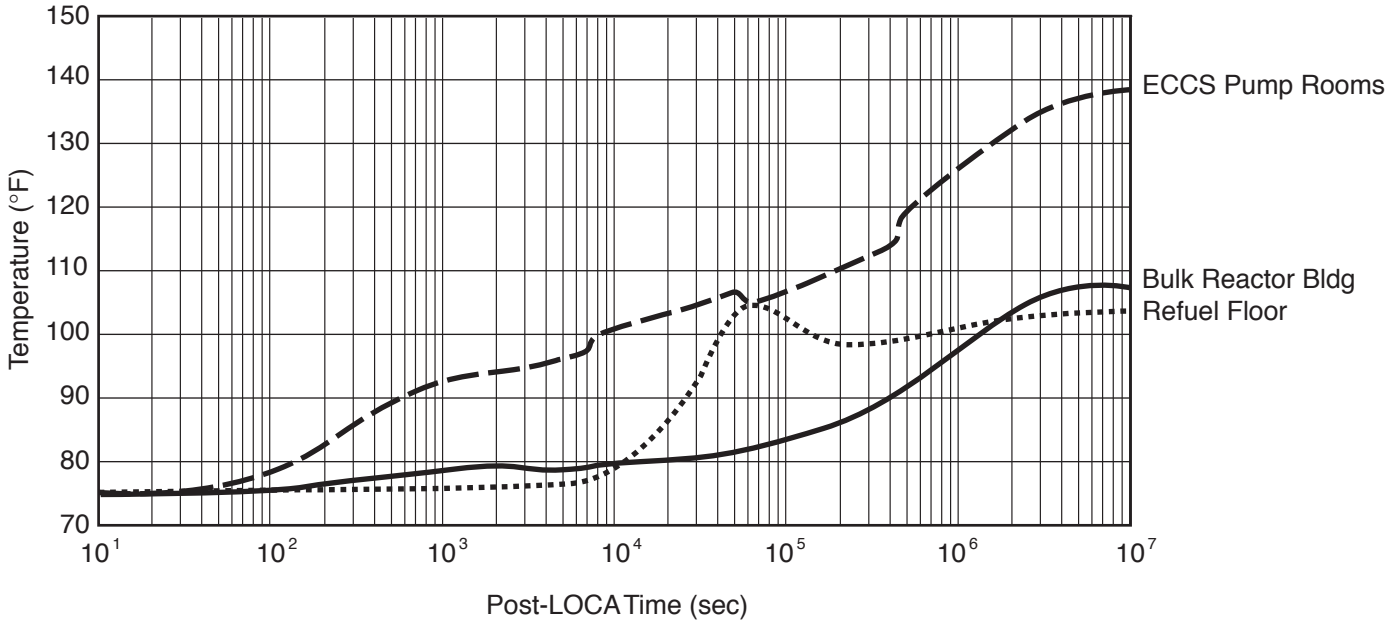

Columbia Generating Station Final Safety Analysis Report	Long-Term Post-LOCA Secondary Containment Temperature Transient		
	Draw. No. 920843.17	Rev.	Figure 6.2-34

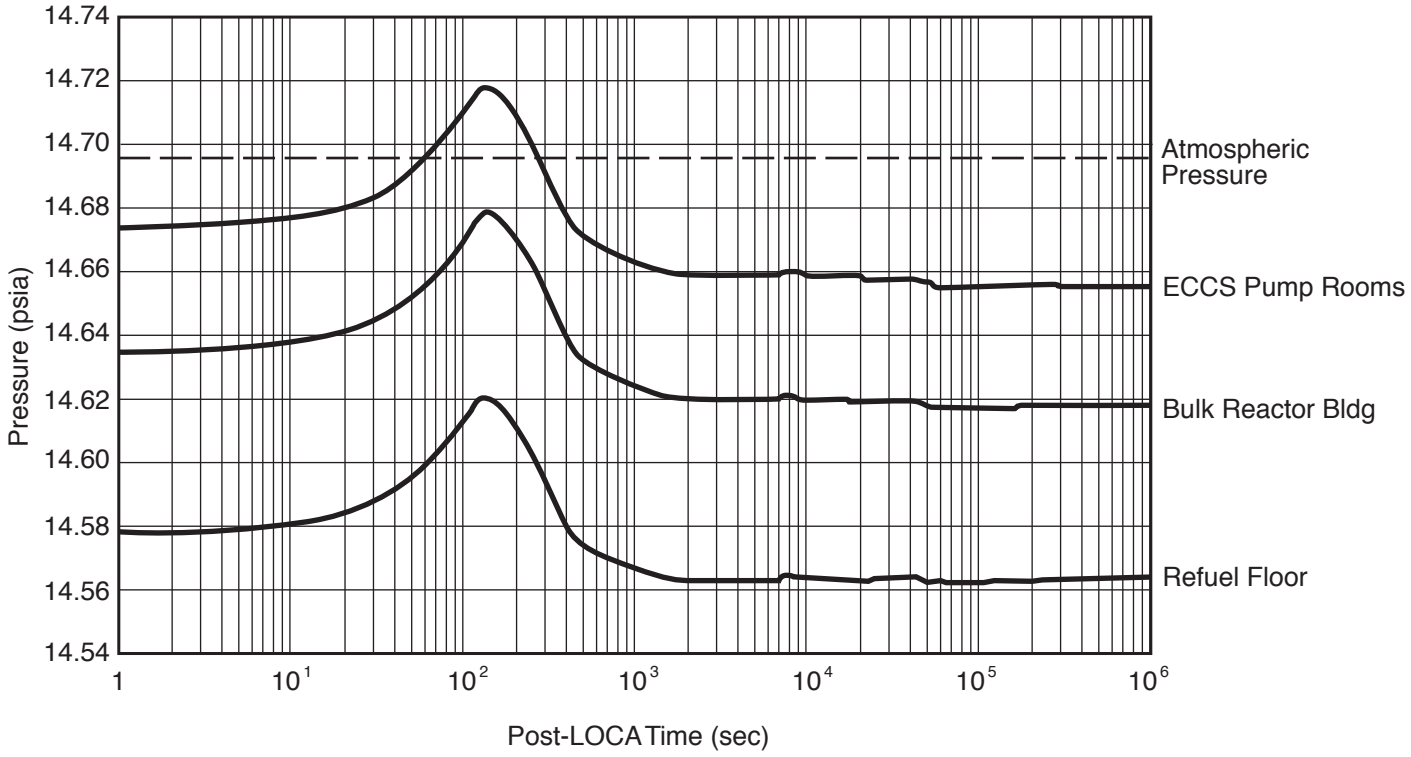

Columbia Generating Station Final Safety Analysis Report	**Short-Term Post-LOCA Secondary Containment Pressure Transient**		
	Draw. No. **920843.16**	Rev.	Figure **6.2-35**

Notes on Type C Testing (Isolation Valve Leakage Testing)

1. Type C testing is performed by applying a differential pressure in the same direction as seen by the valves during containment isolation.

2. Type C testing is performed by pressurizing between the two-piece disk gate valve.

3. Type C testing is performed by pressurizing between the isolation valves. The test yields conservative results since the inboard, globe valve is pressurized under the seat during the test; whereas, during containment isolation, it is pressurized above the seat.

4. Type C testing is performed by pressurizing between the isolation valves. The test yields equivalent results for the inboard gate or butterfly valve. *

5. Type C testing is not required since a water seal is provided by the suppression pool.

6. Type C testing is performed by pressurizing between the isolation valves. The test yields equivalent results for the inboard gate valve. * The one-inch globe valve will have test pressure applied under the seat; however, the difference between testing a one-inch globe valve over or under the seat is considered negligible being less than 10% of the normal seating force.

7. Type C testing is performed by pressurizing between the isolation valves. The one-inch globe valve will have test pressure applied over the seat for the inboard isolation valve and under the seat for the outboard isolation valve. The difference between testing under and over the seat for a one-inch globe valve is considered negligible being less than 10% of the normal seating force.

8. Type C testing is performed by pressurizing between the isolation valves. The one-inch globe valve will have test pressure applied under the seat; however, the difference between testing a one-inch globe valve over or under the seat is considered negligible being less than 10% of the normal seating force.

9. This penetration does not constitute potential primary containment atmospheric pathways during and following a DBA. Type C testing not required. Leakage testing conducted to satisfy requirements of TS 5.5.2

* The gate and butterfly valves are because of symmetry of design and because of construction equally leak tight in either direction. This fact has been confirmed by review of leakage test data and other information supplied by the valve manufacturers.

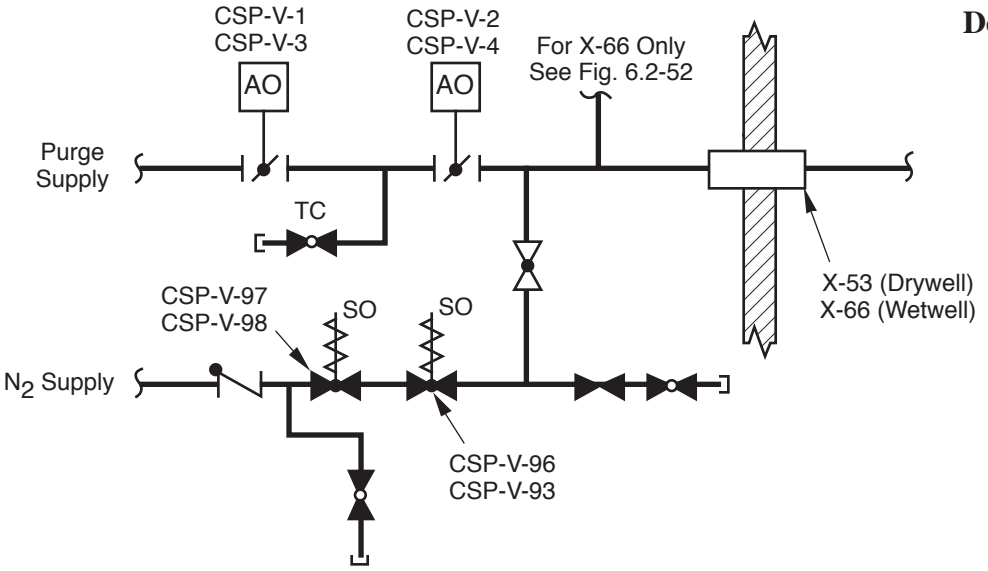

Note: See Note 4 on Figure 6.2-36

X-53 Drywell Purge and Inerting Makeup
X-66 Wetwell Purge and Inerting Makeup

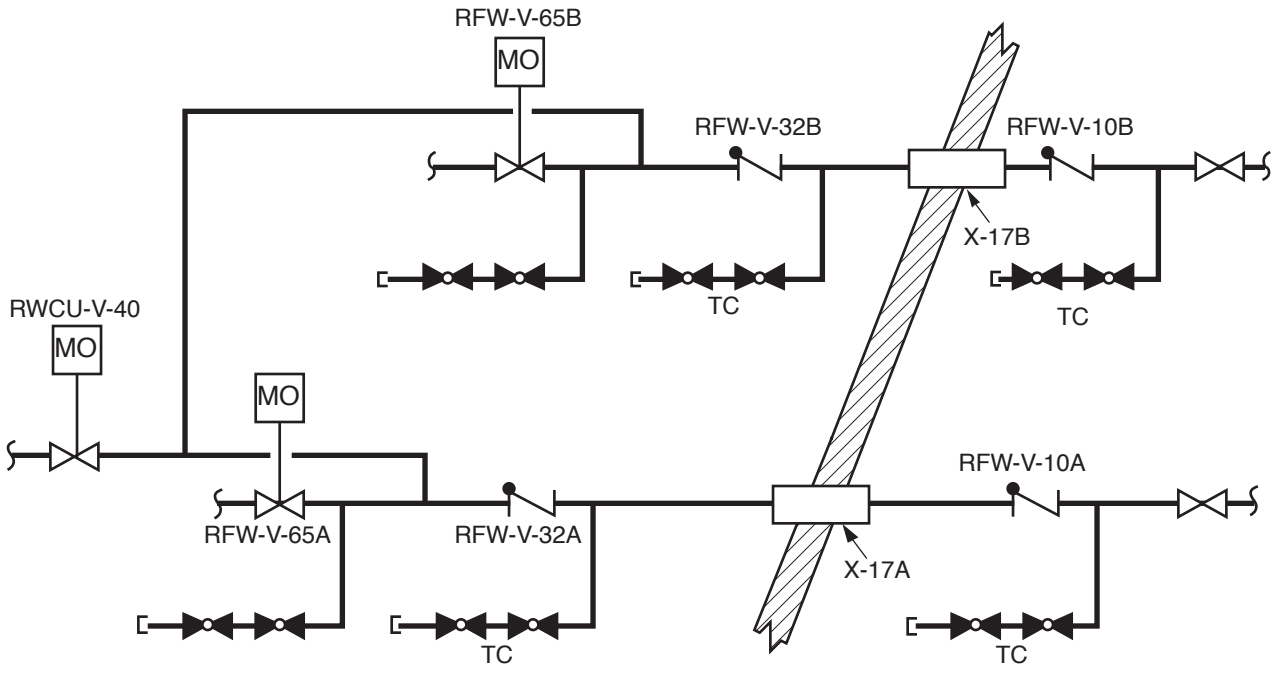

Note: See Note 1 on Figure 6.2-36

Reactor Feedwater Lines

Columbia Generating Station Final Safety Analysis Report	Isolation Valve Arrangement for Penetrations X-53, X-66, X-17A and X-17B		
	Draw. No. 920843.18	Rev.	Figure 6.2-37

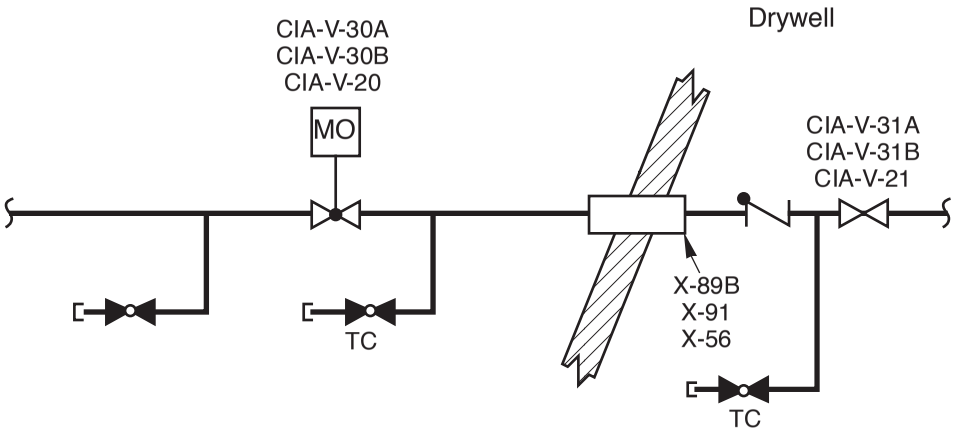

Note: See Note 1 on Figure 6.2-36

Containment Instrument Air

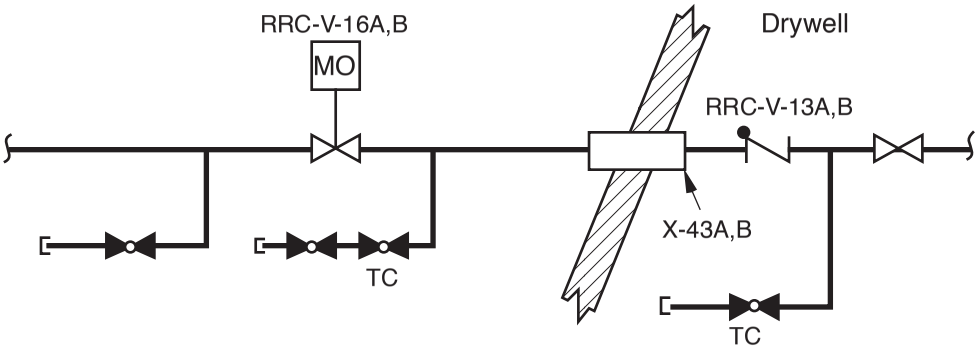

Note: See Note 1 on Figure 6.2-36

RRC Pump Seal Purge

Columbia Generating Station Final Safety Analysis Report	Isolation Valve Arrangement for Penetrations X-89B, X-91, X-56, X-43A, and X-43B		
	Draw. No. 920843.19	Rev.	Figure 6.2-38

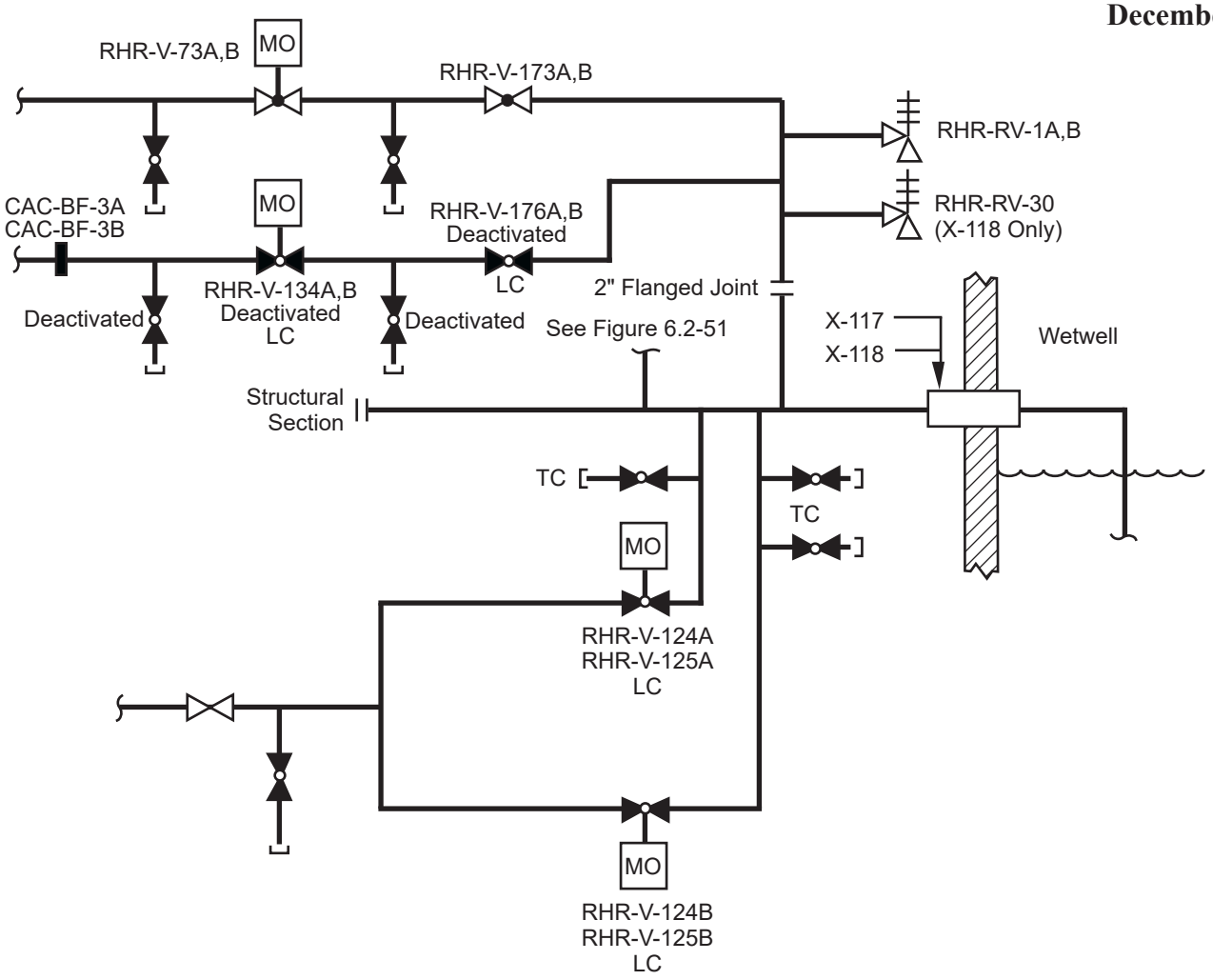

RHR Steam Lines

Note: See Note 5 on Figure 6.2-36

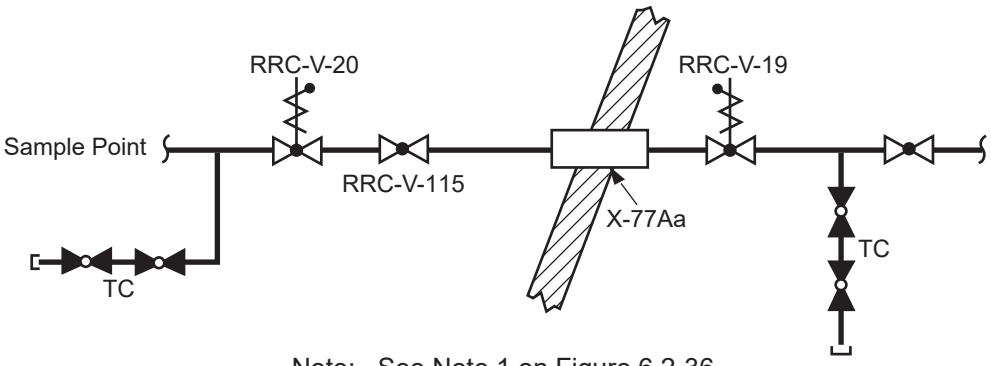

Note: See Note 1 on Figure 6.2-36

RCC Sample Line

Columbia Generating Station Final Safety Analysis Report	**Isolation Valve Arrangement for Penetrations X-117, X-118 and X-77Aa**		
	Draw. No. 920843.21	**Rev.**	**Figure 6.2-39**

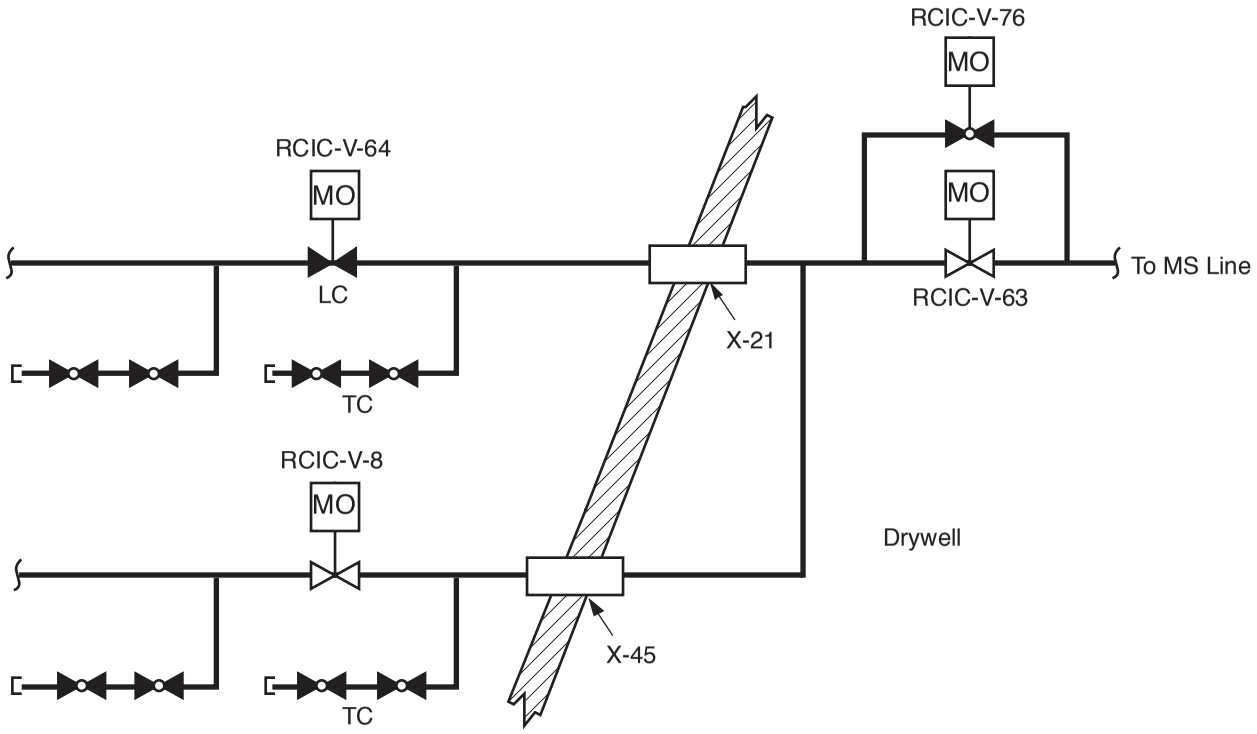

Note: See Note 6 on Figure 6.2-36

Steam to RCIC Turbine and RHR Heat Exchanger

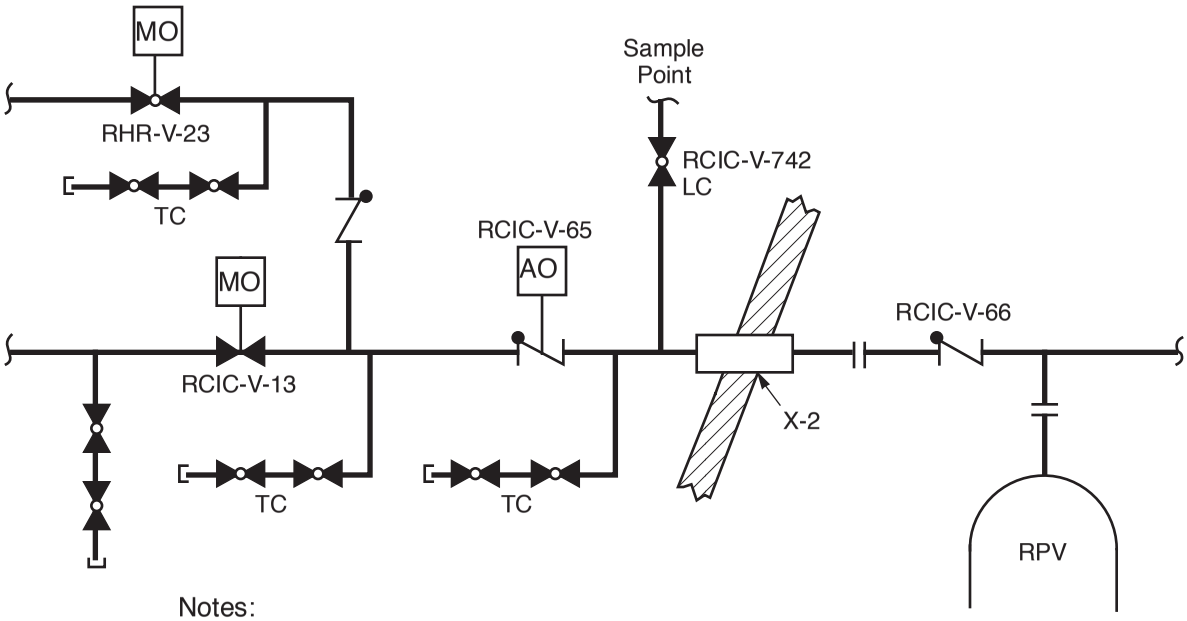

Notes:

RCIC-V-66 will be "bench tested" once the line is removed for refueling. RHR-V-23 and RCIC-V-13 can be tested once the flanged connection is blanked off as per note 1 on figure 6.2-36

RCIC/RHR Head Spray

Columbia Generating Station Final Safety Analysis Report	Isolation Valve Arrangement for Penetrations X-21, X-45 and X-2		
	Draw. No. 920843.22	Rev.	Figure 6.2-40

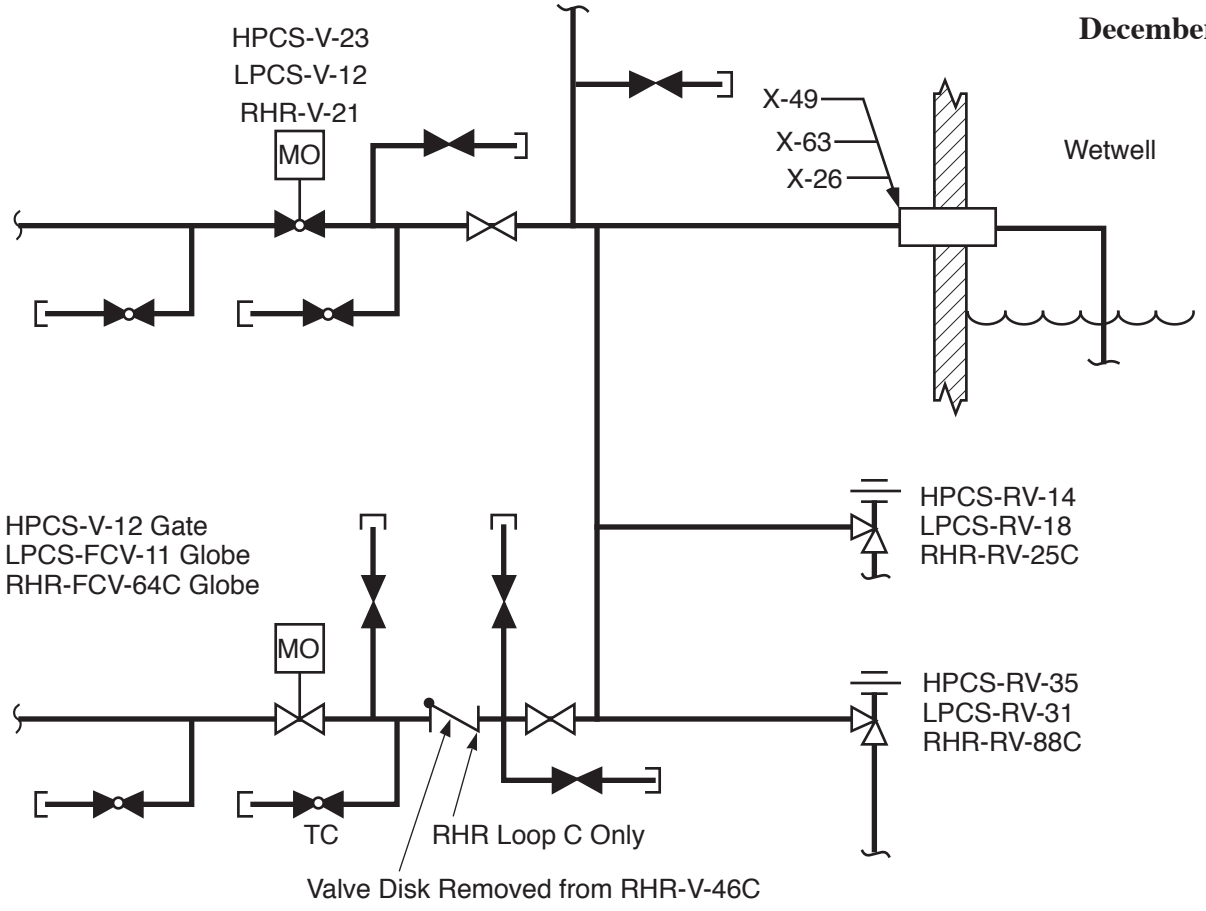

Note: See Note 5 on Figure 6.2-36
X-49 HPCS Test Line
X-63 LPCS Test Line
X-26 RHR Loop C Test Line

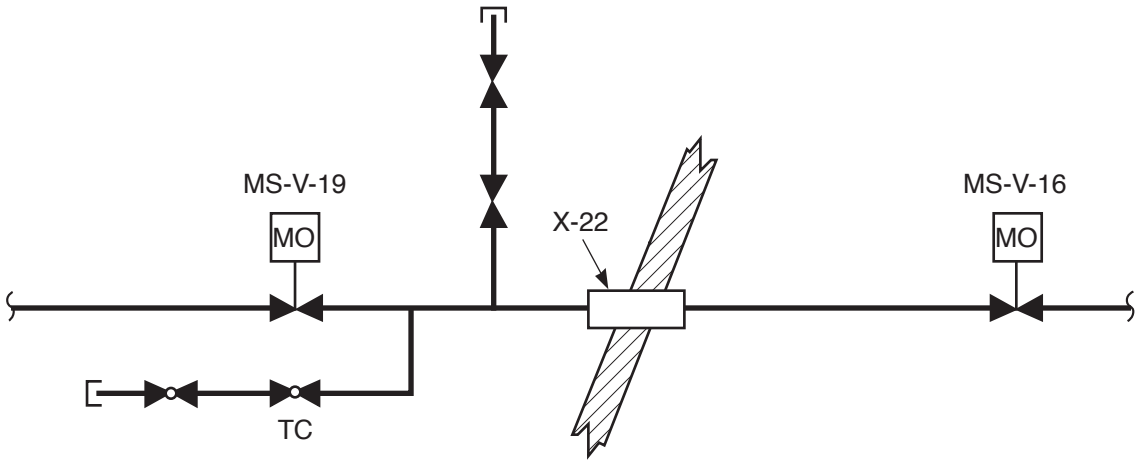

Note: See Note 4 on Figure. 6.2-36

MS Drain Line

Columbia Generating Station Final Safety Analysis Report	Isolation Valve Arrangement for Penetrations X-49, X-63, X-26 and X-22		
	Draw. No. 950021.13	Rev.	Figure 6.2-41

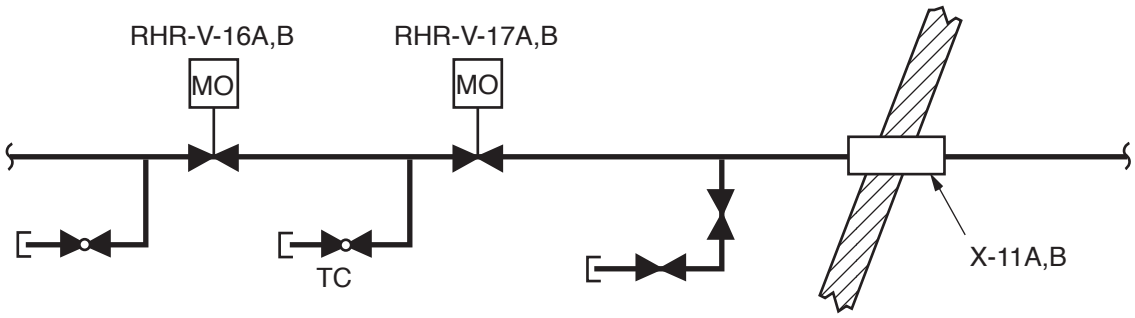

Note: See Note 4 on Figure 6.2-36

RHR Drywell Spray

Columbia Generating Station Final Safety Analysis Report	Isolation Valve Arrangement for Penetrations X-11A and X-11B		
	Draw. No. 920843.08	Rev.	Figure 6.2-42

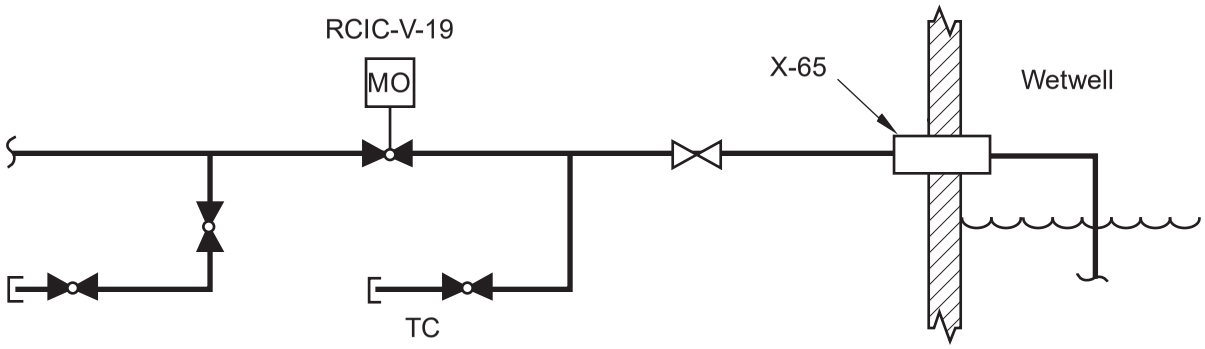

Note: See Note 5 on Figure 6.2-36

RCIC Pump Min. Flow

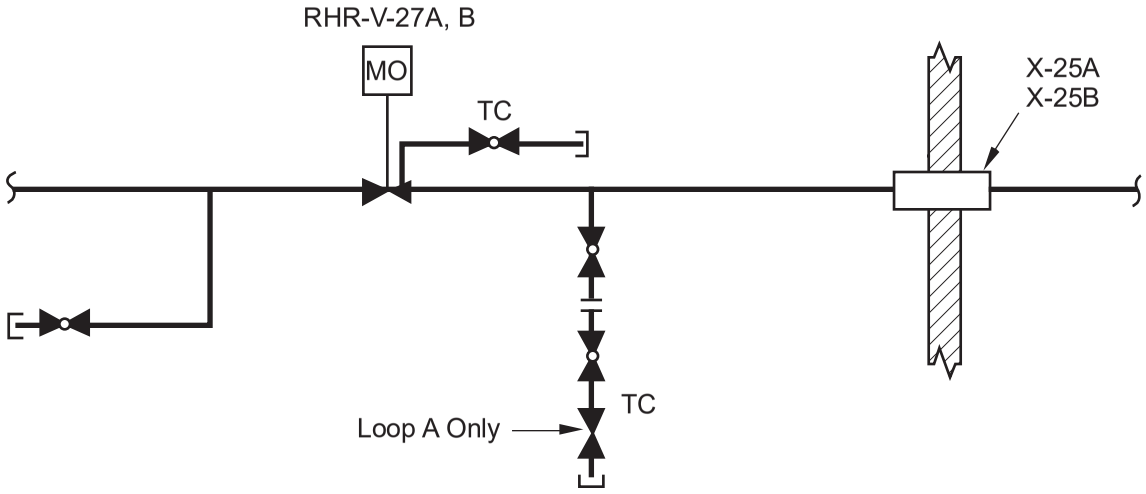

Note: See Note 9 on Figure 6.2-36

RHR Wetwell Spray

Columbia Generating Station Final Safety Analysis Report	Isolation Valve Arrangement for Penetrations X-65, X-25A and X-25B		
	Draw. No. 920843.09	Rev. 1	Figure 6.2-43

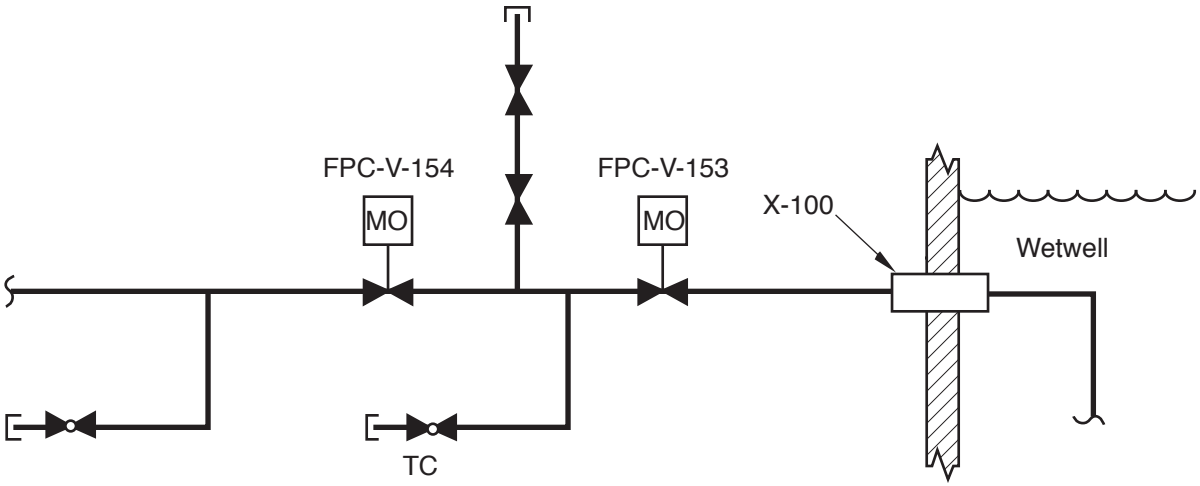

Note: See Note 4 on Figure 6.2-36

Suppression Pool Cleanup Suction Line

Columbia Generating Station Final Safety Analysis Report	Isolation Valve Arrangement for Penetration X-100		
	Draw. No. 920843.10	Rev.	Figure 6.2-44

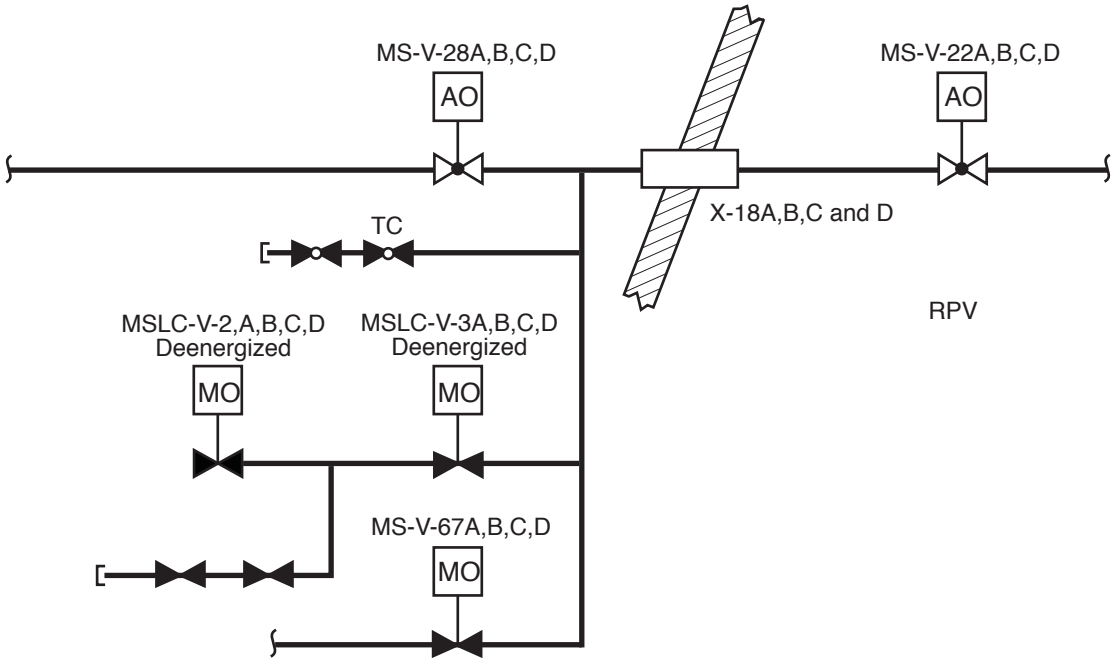

Note: See Note 3 on Figure 6.2-36

Main Steamlines

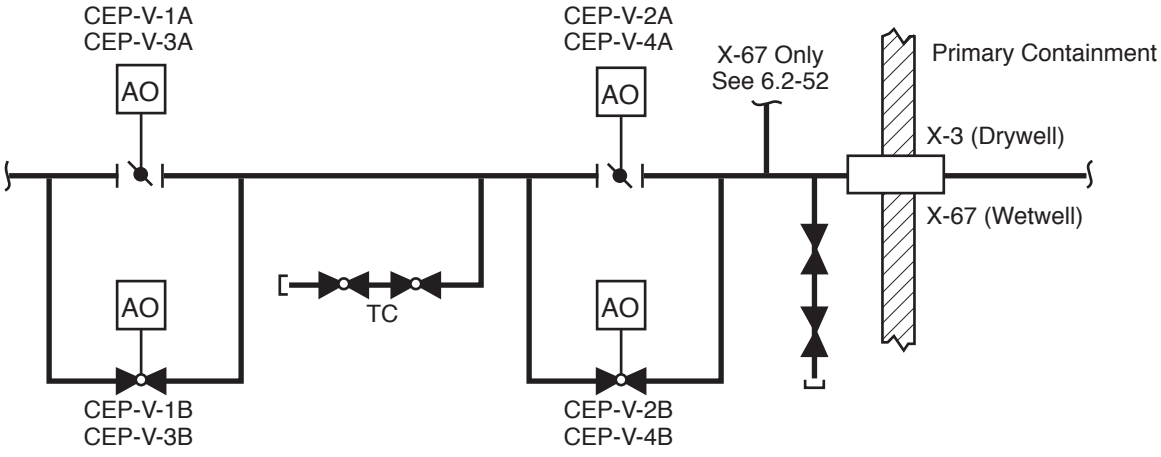

Note: See Note 4 on Figure 6.2-36

X-3 Drywell Purge Exhaust

X-67 Wetwell Purge Exhaust

Columbia Generating Station Final Safety Analysis Report	Isolation Valve Arrangement for Penetrations X-18A, X-18B, X-18C, X18D, X-3 and X-67		
	Draw. No. 920843.23	Rev.	Figure 6.2-45

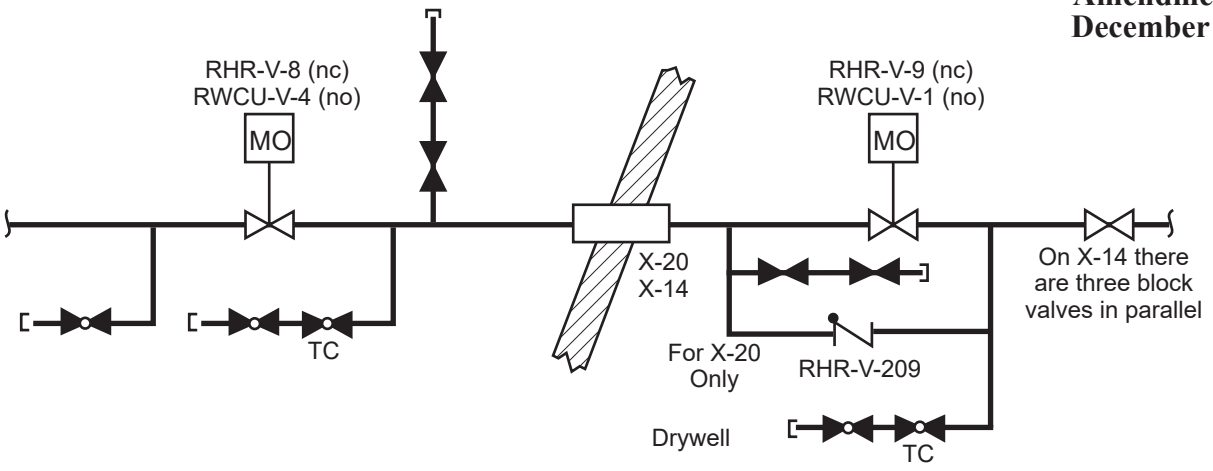

Note: See Notes 1 (X-20 Only), and 4 (X-14 Only) on Figure 6.2-36

X-20 RHR Shutdown Cooling Supply
X-14 RWCU Suction

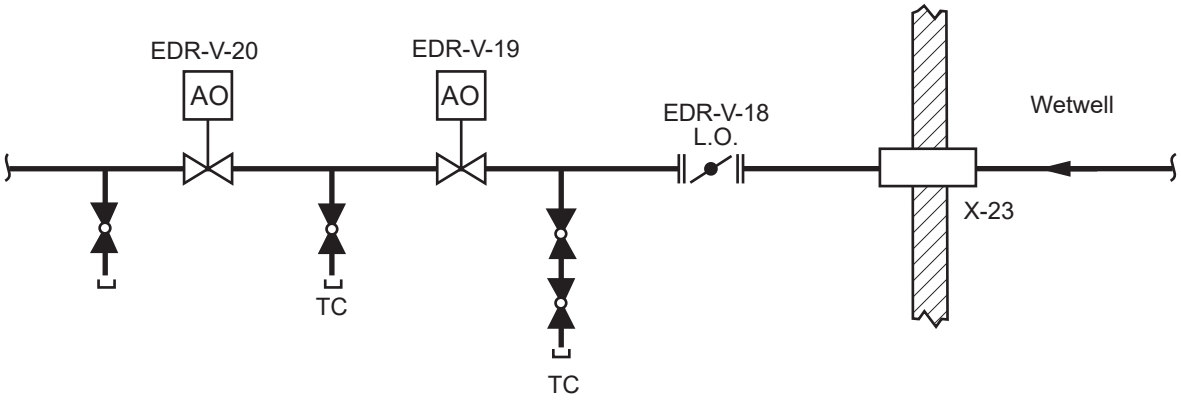

X-23 EDR from Primary Containment

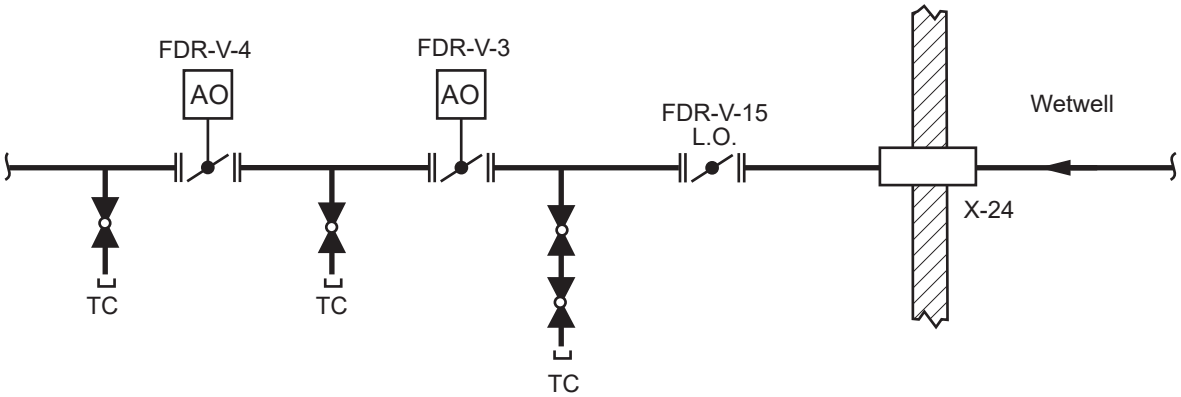

X-24 FDR from Primary Containment

Note: See Note 1 on Figure 6.2-36 for X-23 And X-24

Columbia Generating Station Final Safety Analysis Report	**Isolation Valve Arrangement for Penetrations X-20, X-14, X-23 and X-24**		
	Draw. No. 920843.24	**Rev.**	**Figure 6.2-46**

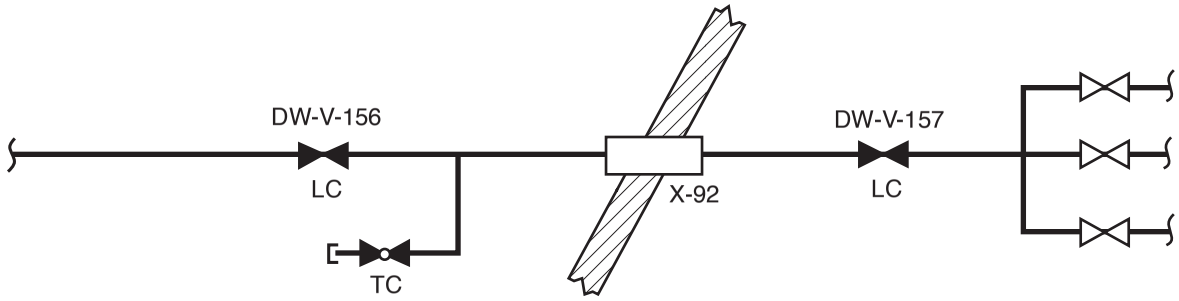

Note: See Note 4 on Figure 6.2-36

DW System

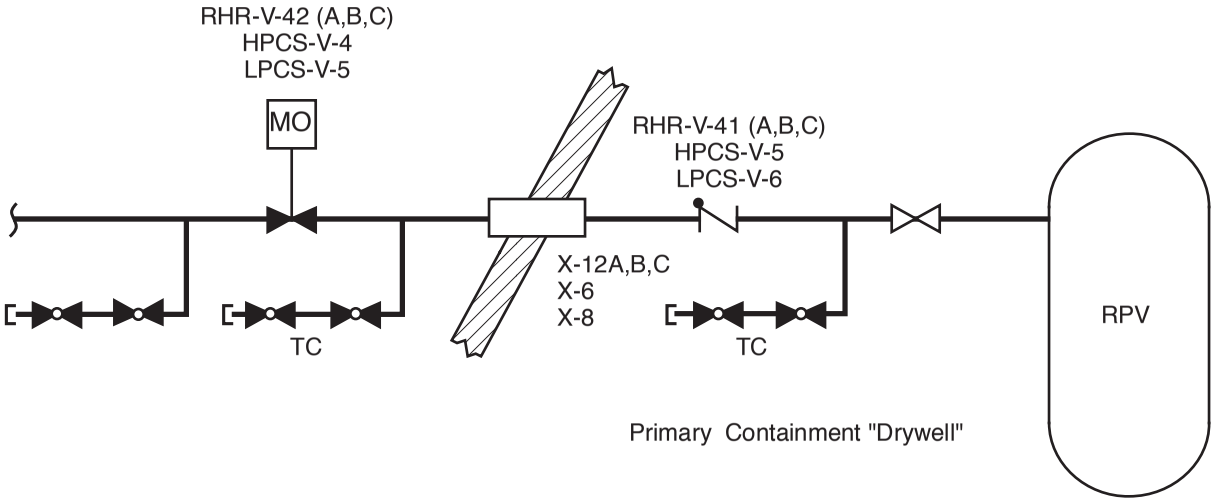

Note: See Note 1 on Figure 6.2-36

X-12A RHR Loop A LPCI to RPV
X-12B RHR Loop B LPCI to RPV
X-12C RHR Loop C LPCI to RPV
X-6 HPCS to RPV
X-8 LPCS to RPV

Columbia Generating Station Final Safety Analysis Report	Isolation Valve Arrangement for Penetrations X-92, X-12A, X-12B, X-12C, X-6 and X-8		
	Draw. No. 920843.25	Rev.	Figure 6.2-47

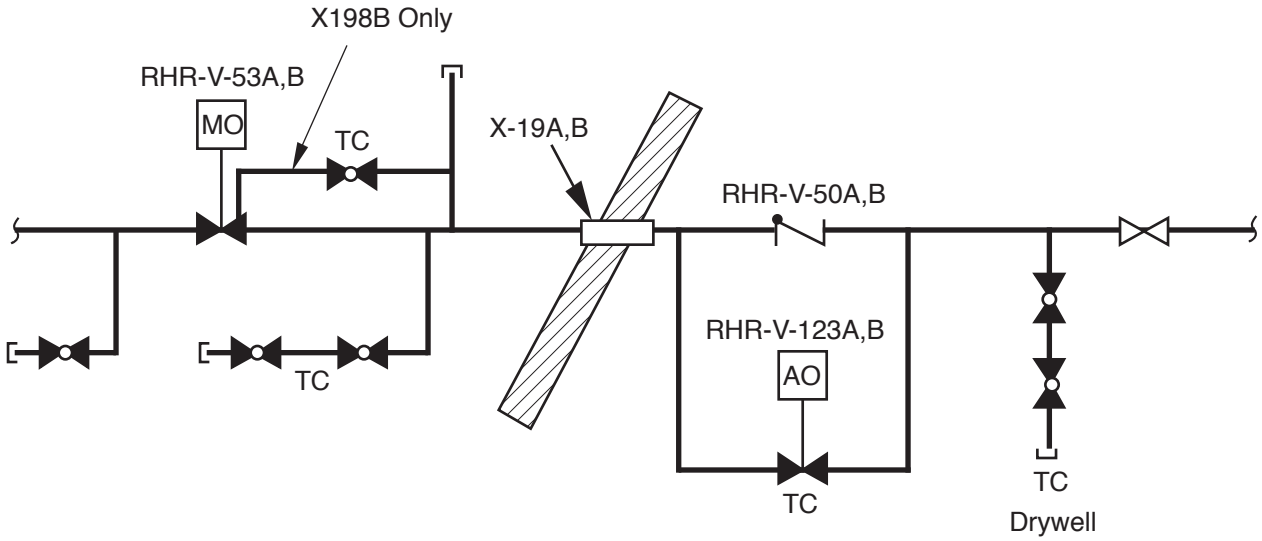

Note: See Note 2 on Fig. 6.2-36

RHR SHUTDOWN COOLING RETURN

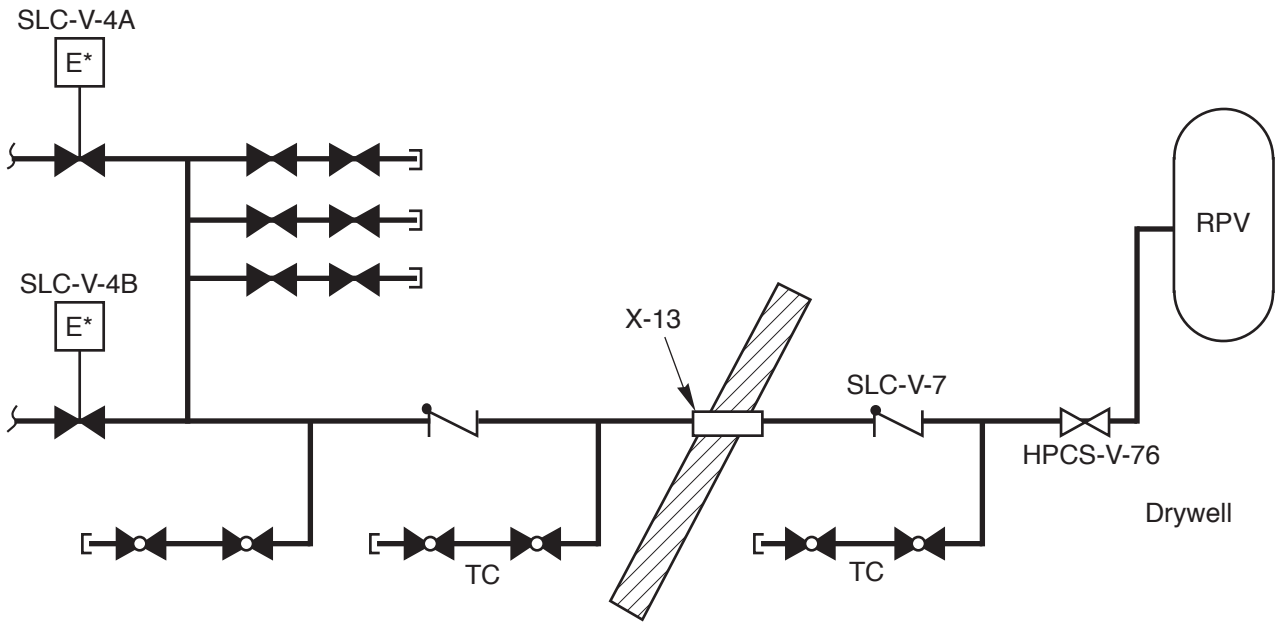

*Explosive Actuated Valve

Note: See Note 2 on Fig. 6.2-36

SLC SYSTEM INJECTION LINE

Columbia Generating Station Final Safety Analysis Report	Isolation Valve Arrangement for Penetrations X-19A, X-19B and X-13		
	Draw. No. 900547.31	Rev.	Figure 6.2-48

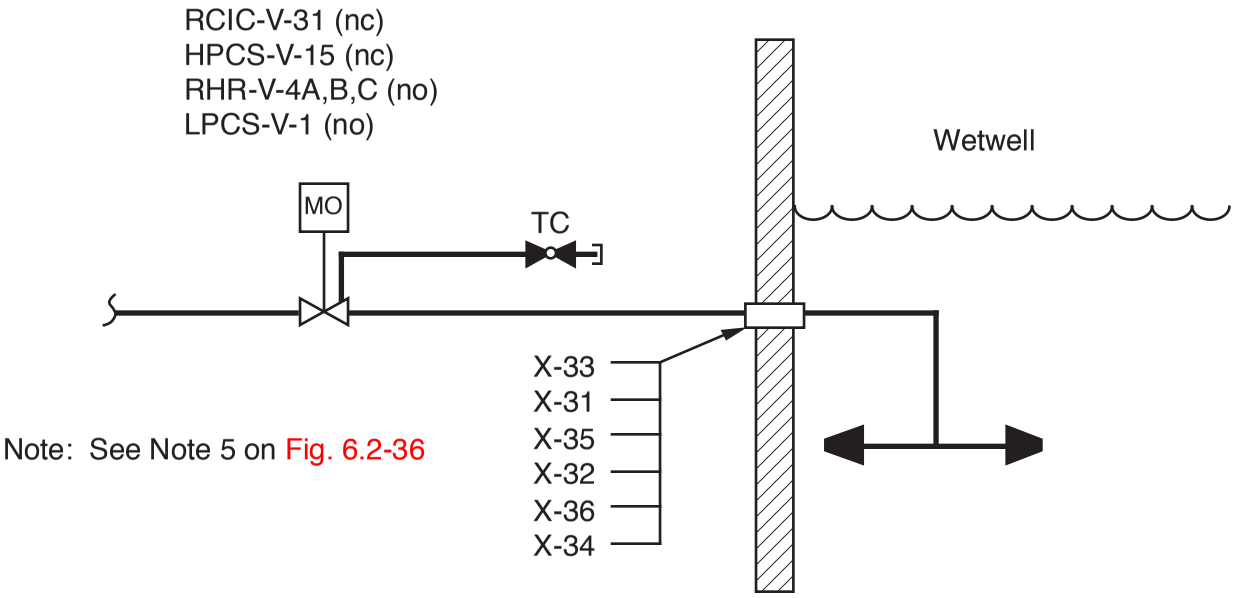

X-33 RCIC Pump Suction from Suppression Pool
X-31 HPCS Pump Suction from Suppression Pool
X-35 RHR"A" Pump Suction from Suppression Pool
X-32 RHR"B" Pump Suction from Suppression Pool
X-36 RHR"C" Pump Suction from Suppression Pool
X-34 LPCS Pump Suction from Suppression Pool

Columbia Generating Station Final Safety Analysis Report	**Isolation Valve Arrangement for Penetrations X-33, X-31, X-35, X-32, X-36 and X-34**		
	Draw. No. 920843.04	Rev.	Figure 6.2-49

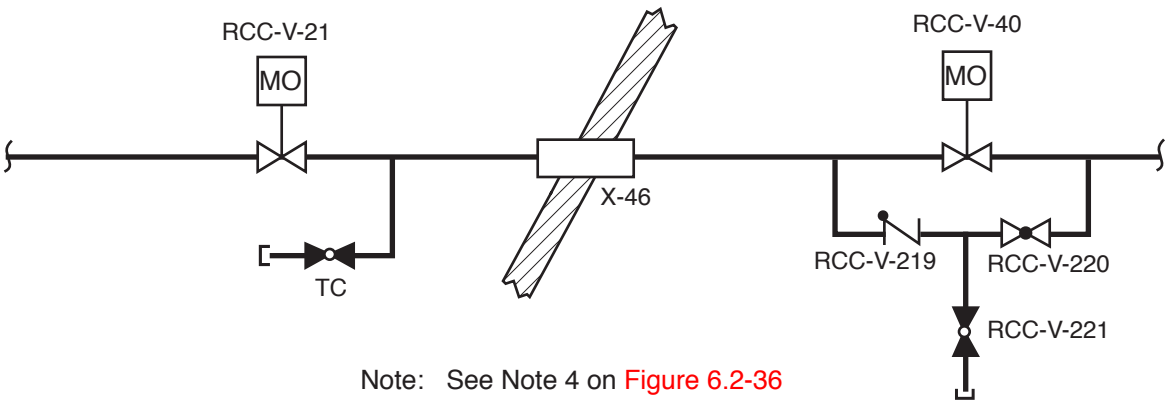

Note: See Note 4 on Figure 6.2-36

RCC Return Line

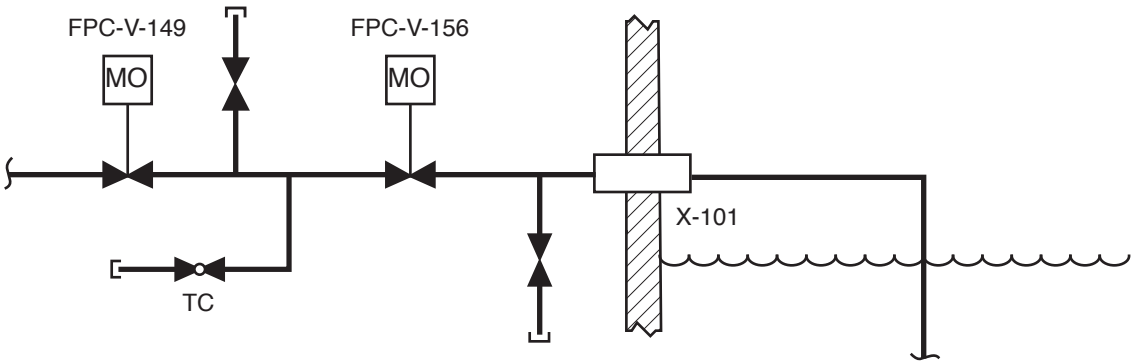

Note: See Note 4 on Figure 6.2-36

Suppression Pool Cleanup Return Line

Columbia Generating Station Final Safety Analysis Report	Isolation Valve Arrangement for Penetrations X-46 and X-101		
	Draw. No. 920843.26	Rev.	Figure 6.2-50

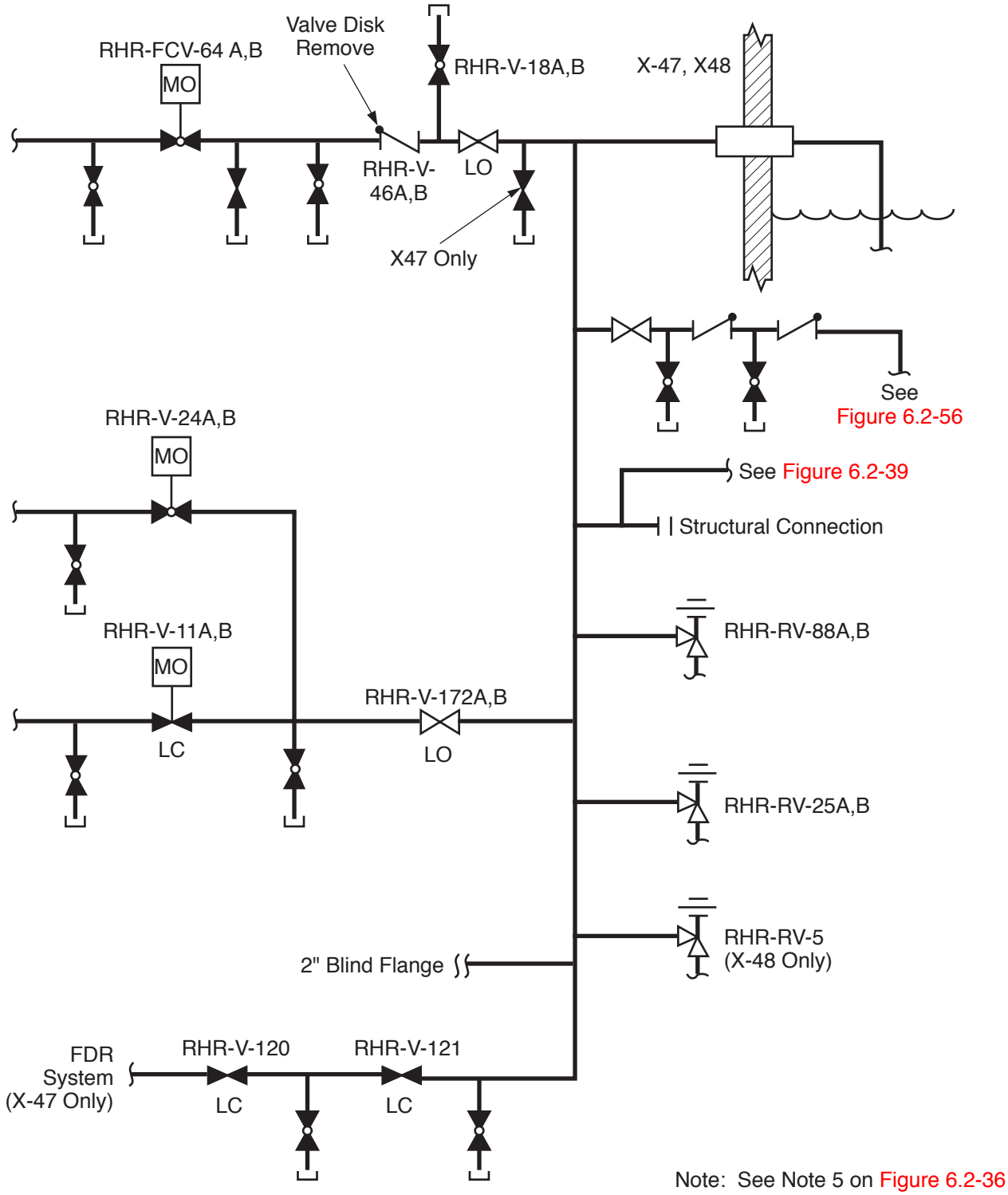

RHR Combined Return Line to Suppression Pool

Columbia Generating Station Final Safety Analysis Report	**Isolation Valve Arrangement for Penetrations X-47 and X-48**		
	Draw. No. 950021.14	Rev.	Figure 6.2-51

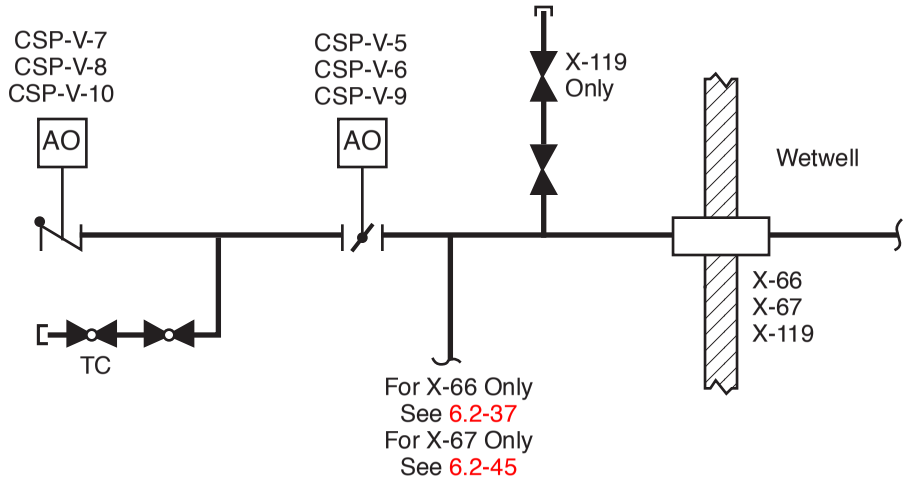

Note: See Note 4 on Figure 6.2-36

Reactor Building To Wetwell Vacuum Relief

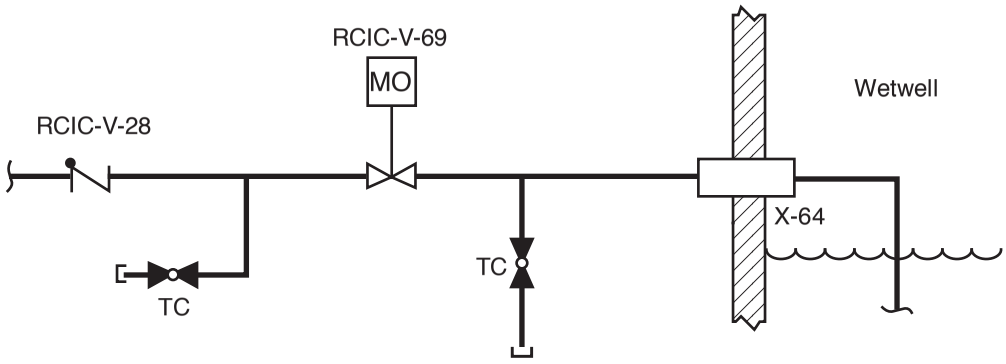

Note: See Note 5 on Figure 6.2-36

RCIC Vacuum Pump Discharge

Columbia Generating Station Final Safety Analysis Report	Isolation Valve Arrangement for Penetrations X-66, X-67, X-119, X-64		
	Draw. No. 920843.27	Rev.	Figure 6.2-52

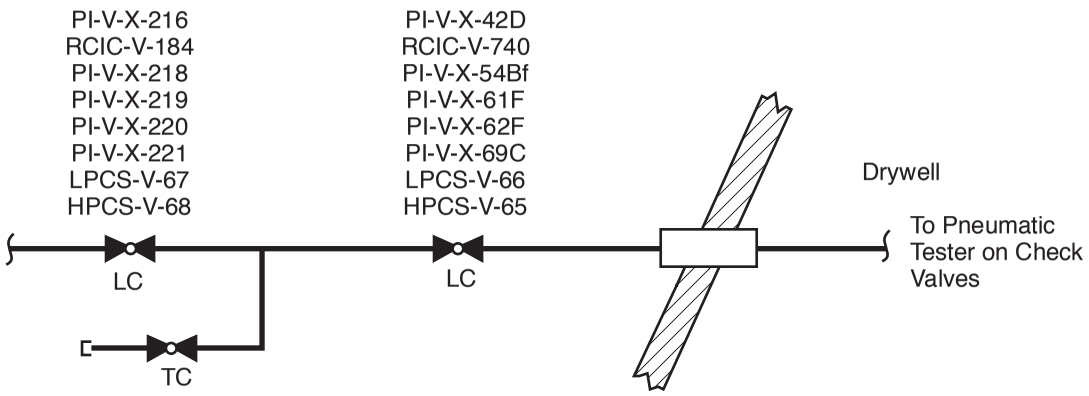

Note: See Note 7 on Figure 6.2-36

X-42D Air Line for RHR-V-50A
X-54Aa Spare Air Line
X-54Bf Air Line for RHR-V-41B
X-61F Air Line for RHR-V-41A
X-62F Air Line for RHR-V-41C
X-69C Air Line for RHR-V-50B
X-78D Air Line for LPCS-V-6
X-78E Air Line for HPCS-V-5

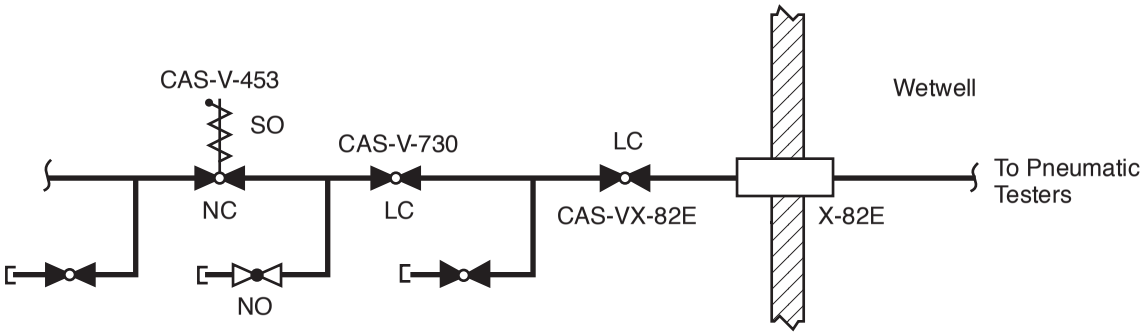

Note: See Note 8 on Figure 6.2-36

N_2/Air Supply for Testing Wetwell to Drywell Vacuum Breakers

Columbia Generating Station Final Safety Analysis Report	Isolation Valve Arrangement for Penetrations X-42D, 54Aa, 54Bf, 61F, 62F, 69C, 78D, 78E and 82E,		
	Draw. No. 920843.28	Rev.	Figure 6.2-53

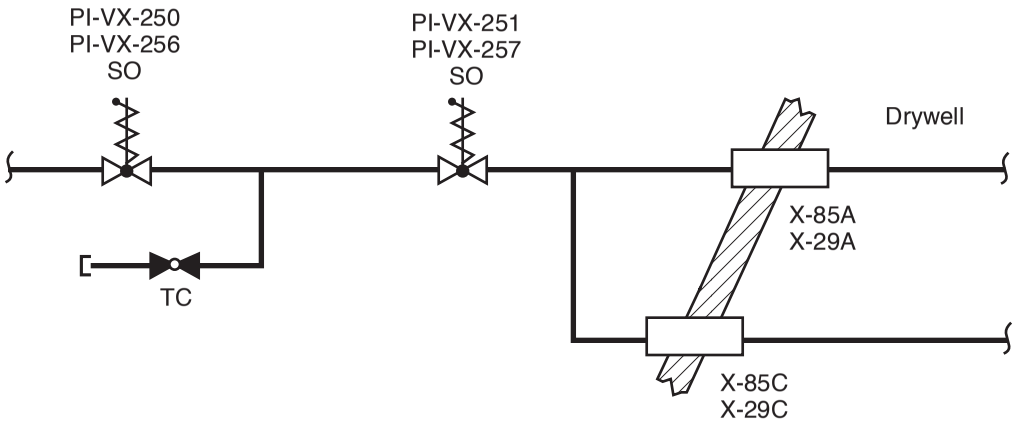

Note: See Note 1 on Figure 6.2-36

Radiation Monitor Supply Line Division A
Radiation Monitor Supply Line Division B



Note: See Note 1 on Figure 6.2-36

Radiation Monitor Return Line Division A
Radiation Monitor Return Line Division B

Columbia Generating Station Final Safety Analysis Report	Isolation Valve Arrangement for Penetrations X-85A, X-29A, X-85C, X-29C, X-72F, and X-73E		
	Draw. No. 920843.29	Rev.	Figure 6.2-54

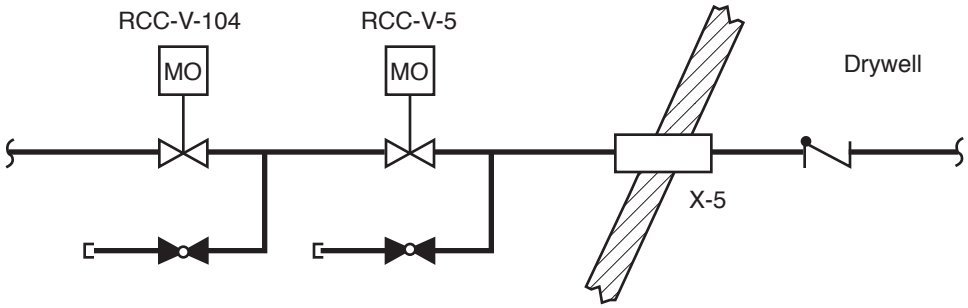

Note: See Note 4 on Figure 6.2-36

RCC Supply Line

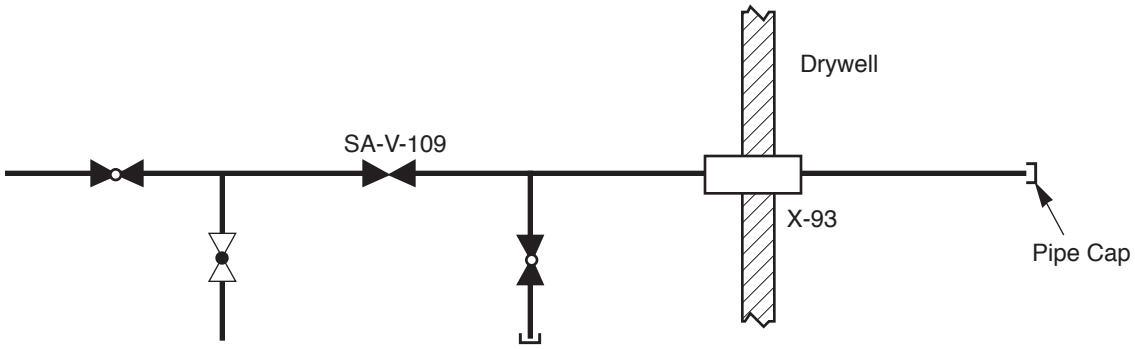

Note: See Note 1 on Figure 6.2-36

Service Air for Maintenance

Columbia Generating Station Final Safety Analysis Report	Isolation Valve Arrangement for Penetrations X-5 and X-93		
	Draw. No. 920843.30	Rev.	Figure 6.2-55

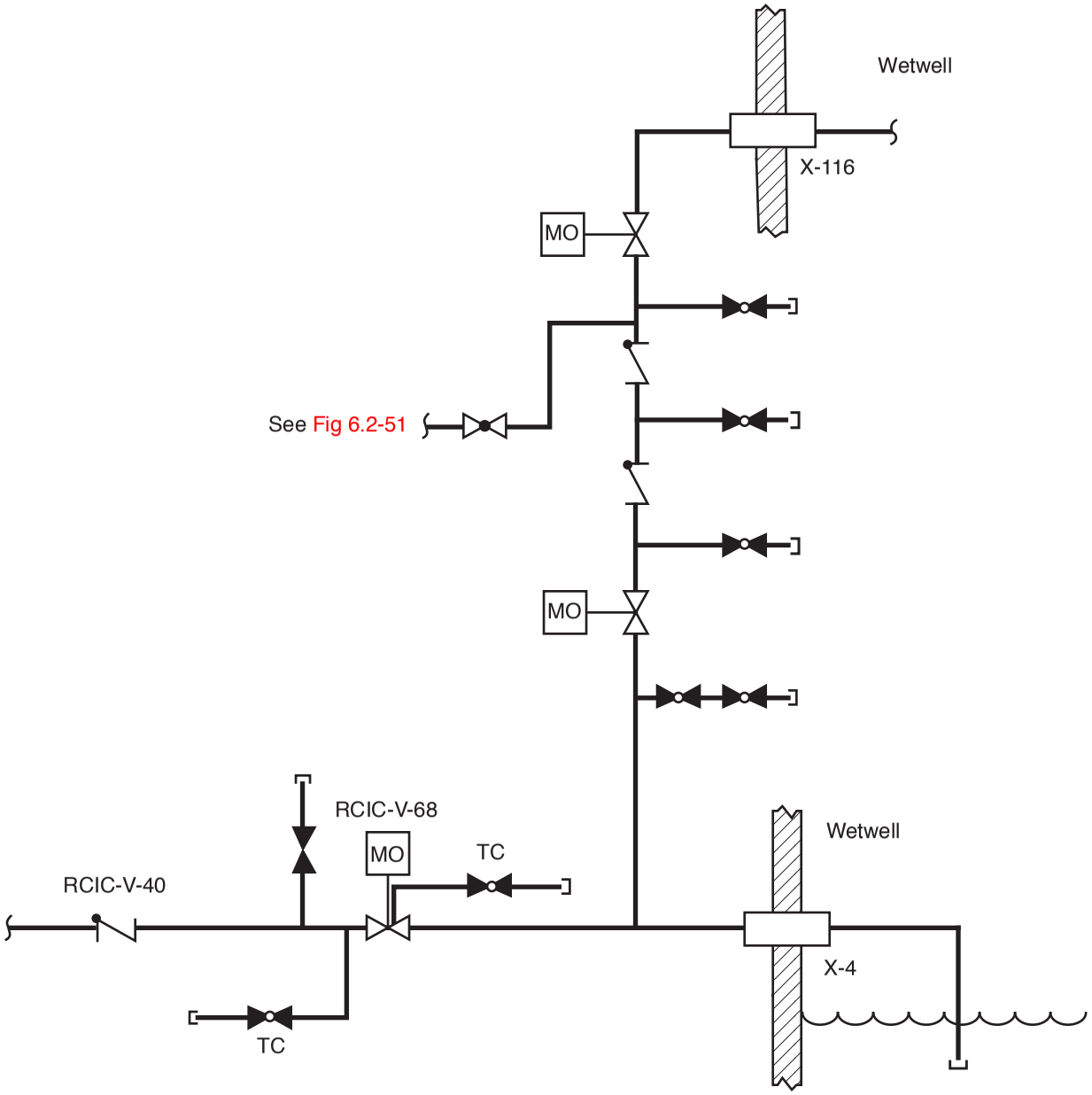

Note: See Note 4 on Figure 6.2-36

RCIC Turbine Exhaust and
Turbine Exhaust Vacuum Breaker

Columbia Generating Station Final Safety Analysis Report	Isolation Valve Arrangement for Penetrations X-4 and X-116		
	Draw. No. 920843.31	Rev.	Figure 6.2-56

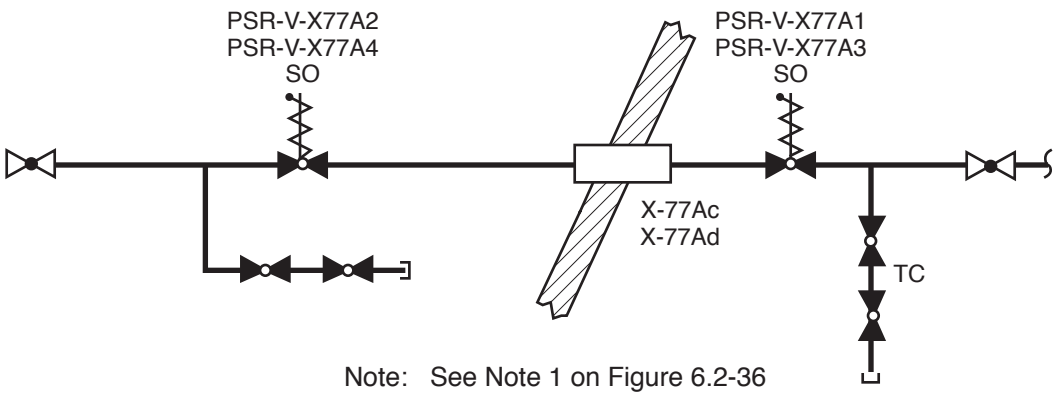

Note: See Note 1 on Figure 6.2-36

X-77Ac Jet Pump #10 Sample Line
X-77Ad Jet Pump #20 Sample Line

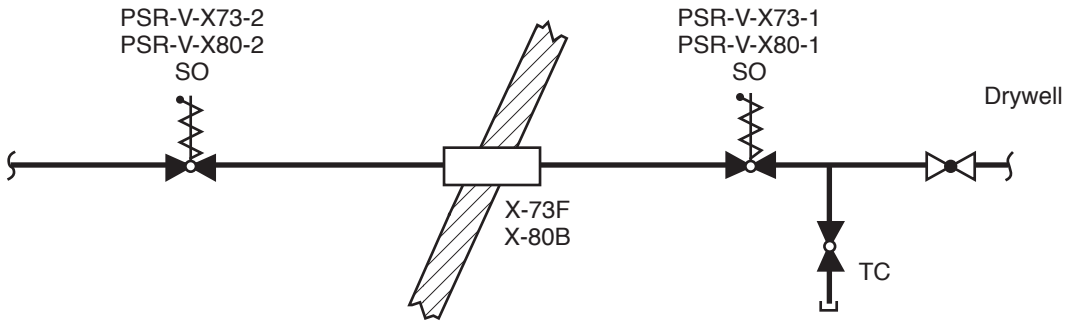

Note: See Note 1 on Figure 6.2-36

X-80B Drywell Atmosphere Sample Line
X-73F Drywell Atmosphere Sample Line

Columbia Generating Station Final Safety Analysis Report	**Isolation Valve Arrangement for Penetrations X-73F, X-77Ac, X-77Ad, X-80B**		
	Draw. No. **920843.32**	Rev. **1**	Figure **6.2-57**

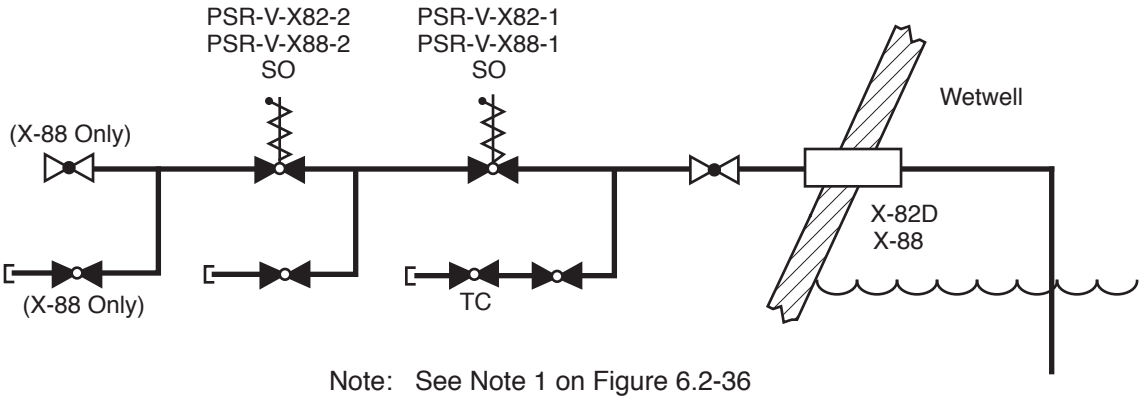

Note: See Note 1 on Figure 6.2-36

X-82D - Sample Return to Suppression Pool
X-88 - Suppression Pool Sample Line

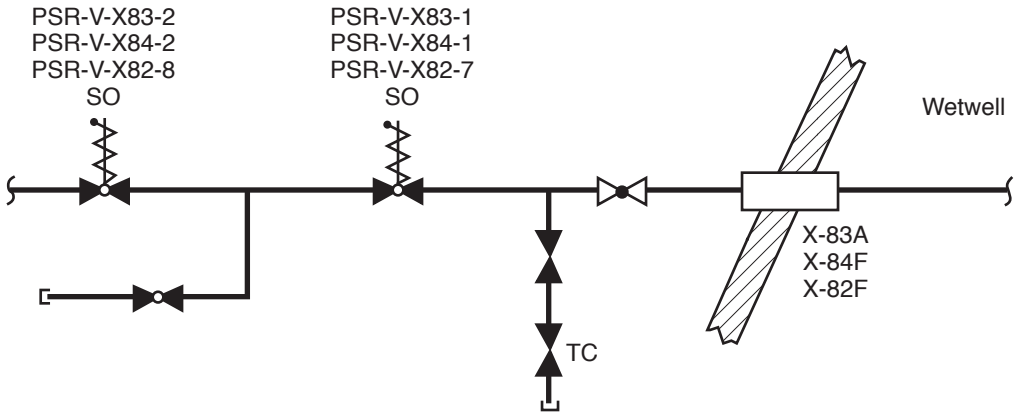

Note: See Note 1 on Figure 6.2-36

X-82F- Suppression Pool Atm. Sample Return
X-83A- Suppression Pool Atm. Sample Line
X-84F- Suppression Pool Atm. Sample Line

Columbia Generating Station Final Safety Analysis Report	Isolation Valve Arrangement for Penetrations X-82D, X-82F, X-83A, X-84F, X-88		
	Draw. No. 920843.33	Rev. 1	Figure 6.2-58

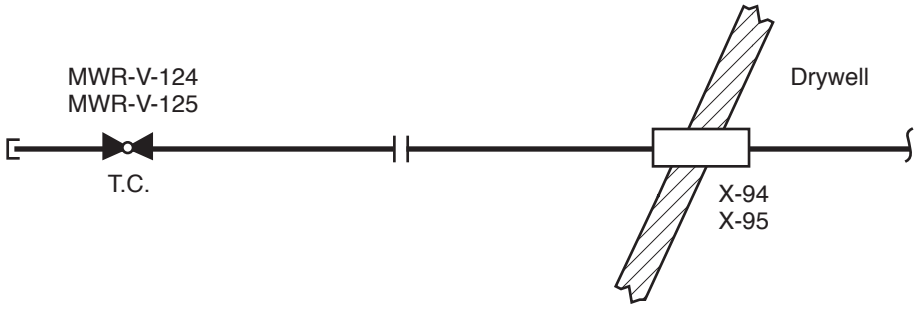

X-94 - Decon Solution Supply Header
X-95 - Decon Solution Return Header

Columbia Generating Station **Final Safety Analysis Report**	**Isolation Valve Arrangement for Penetrations X-94 and X-95**		
	Draw. No. **920843.34**	Rev.	Figure **6.2-59**

DELETED
(SHEETS 1 THROUGH 4)

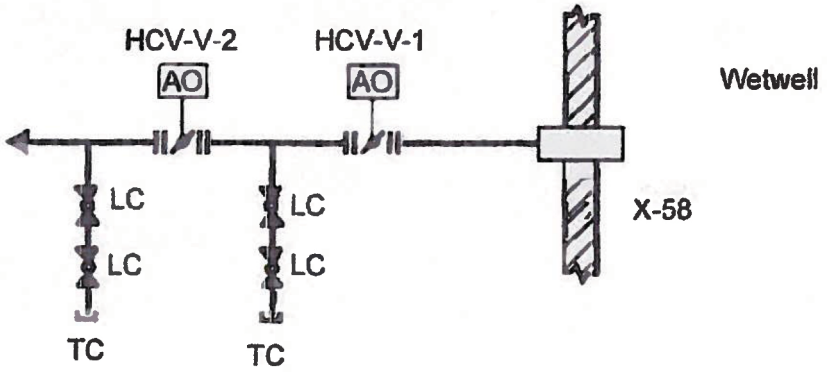

Columbia Generating Station Final Safety Analysis Report	Isolation Valve Arrangement for Penetration X-58		
	Draw. No. 170619.1	Rev.	Figure 6.2-60A

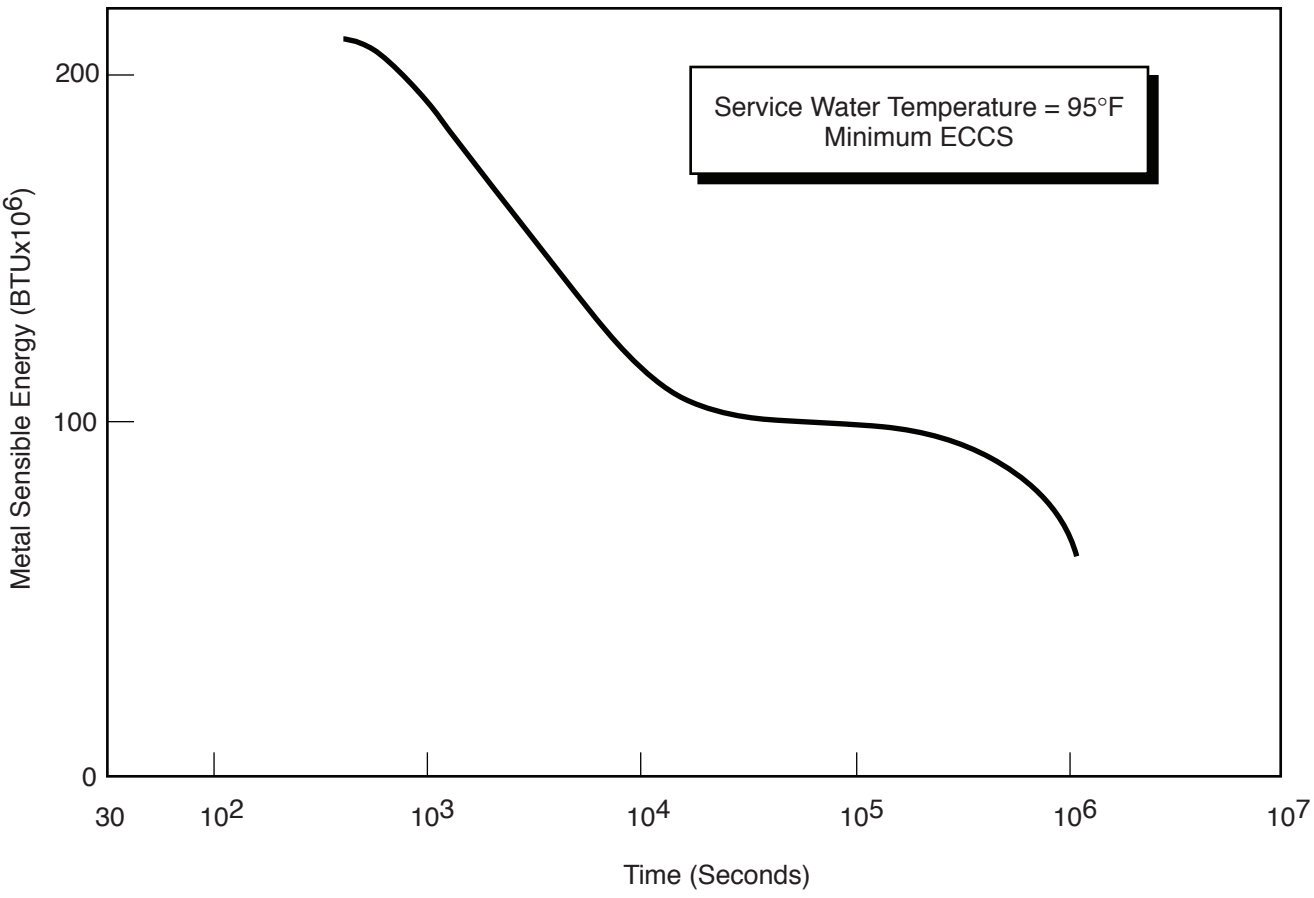

Columbia Generating Station Final Safety Analysis Report	**Sensible Energy Transient in the Reactor Vessel and Internal Metals - Original Rated Power**		
	Draw. No. 960222.66	Rev.	Figure 6.2-61

6.3 EMERGENCY CORE COOLING SYSTEM

This section provides the design bases for the emergency core cooling systems (ECCS), the description of the systems, the postulated ECCS response to a spectrum of accidents, and a performance evaluation. Subsection 6.3.1 discusses the design bases. Subsection 6.3.2 describes the systems. Subsection 6.3.3 discusses the system responses and the evaluation of the system performance. The ECCS design and postulated response are based on information developed by the original nuclear steam supply system (NSSS) vendor, General Electric.

6.3.1 DESIGN BASES AND SUMMARY DESCRIPTION

Reload analysis performed by the fuel vendor in support of the current cycle of operation is performed in a manner that maintains the validity of the design analysis discussed in this section. The operational limits resulting from this cycle-specific analysis are reported in the cycle-specific Core Operating Limits Report (COLR).

6.3.1.1 Design Bases

6.3.1.1.1 Performance and Functional Requirements

The ECCS is designed to provide protection against postulated loss-of-coolant accidents (LOCAs) caused by ruptures in primary system piping. The functional requirements are such that the system performance under all postulated LOCA conditions satisfies the requirements of 10 CFR 50.46. The ECCS is designed to meet the following requirements:

a. Protection is provided for any primary line break up to and including the double-ended guillotine (DEG) break of the largest line,

b. Two independent and diverse cooling methods (flooding and spraying) are provided to cool the core,

c. One high-pressure cooling system is provided which is capable of maintaining water level above the top of the core and preventing automatic depressurization system (ADS) actuation for line breaks less than 1 in. nominal diameter,

d. No operator action is required until 10 minutes after an accident, and

e. A sufficient water source and the necessary piping, pumps, and other hardware are provided so that the containment and reactor core can be flooded for possible core heat removal following a LOCA.

6.3.1.1.2 Reliability Requirements

The following reliability requirements apply:

a. The ECCS conforms to licensing requirements and design practices of isolation, separation, and single failure considerations.

b. The ECCS network has a built-in redundancy so that adequate cooling can be provided, even in the event of specified failures. The following equipment makes up the ECCS:

1. High-pressure core spray (HPCS),
2. Low-pressure core spray (LPCS),
3. Low-pressure coolant injection (LPCI), three loops, and
4. Automatic depressurization system (ADS).

c. The ADS is designed to remain operational following a single active or passive component failure, including power buses, electrical and mechanical parts, cabinets, and wiring.

d. In the event of a break in a pipe that is not a part of the ECCS, no single active component failure in the ECCS can prevent automatic initiation and successful operation of less than the following combination of ECCS equipment:

1. Three LPCI loops, the LPCS and the ADS (i.e., HPCS failure), or

2. Two LPCI loops, the HPCS and the ADS (i.e., LPCS diesel generator failure), or

3. One LPCI loop, the LPCS, the HPCS and ADS (i.e., LPCI diesel generator failure).

e. In the event of a break in a pipe that is a part of the ECCS, no single active component failure in the ECCS can prevent automatic initiation and successful operation of less than the following combination of ECCS equipment:

1. Two LPCI loops and the ADS, or
2. One LPCI loop, the LPCS and the ADS, or
3. One LPCI loop, the HPCS and the ADS, or
4. The LPCS, the HPCS, and ADS.

These are the minimum ECCS combinations which result after assuming any single active component failure and assuming that the ECCS line break disables the affected system.

f. Long term (10 minutes after initiation signal) cooling requires the removal of decay heat by means of the standby service water system. In addition to the break which initiated the loss of coolant event, the system is able to sustain one failure, either active or passive, and still have at least one ECCS pump (LPCI, HPCS, or LPCS) operating with a residual heat removal (RHR) heat exchanger loop with 100% service water flow.

g. Offsite power is the preferred source of power for the ECCS network and every reasonable precaution is made to ensure its high availability. However, onsite emergency power is provided with sufficient diversity and capacity so that all the above requirements can be met if offsite power is not available.

h. The onsite diesel fuel reserve is designed in accordance with IEEE 308-1971 criteria.

i. Diesel-load configuration is as follows:

   1. LPCI loop A (with heat exchanger) and the LPCS connected to the Division 1 diesel generator.

   2. LPCI loop B (with heat exchanger) and loop C connected to the Division 2 diesel generator.

   3. The HPCS connected to the Division 3 diesel generator.

j. Systems which interface with but are not part of the ECCS are designed and operated such that failure(s) in the interfacing systems do not propagate to and/or affect the performance of the ECCS.

k. Non-ECCS systems interfacing with the ECCS buses are automatically shed from and/or isolated from the ECCS buses when a LOCA signal exists and offsite ac power is not available.

l. No more than one storage battery is connected to a dc power bus.

m. The logic required to automatically initiate the ECCS is capable of being tested during plant operation. Each system of the ECCS including flow rate and sensing network is capable of being tested during shutdown or during reactor operation. Pump discharge is routed to the suppression pool or condensate

storage tank through a test line. The injection line isolation valves and isolation check valves are tested in accordance with Section 3.9.6.

n. Provisions for testing the ECCS network components (electronic, mechanical, hydraulic, and pneumatic, as applicable) are installed in such a manner that they are an integral and nonseparable part of the design.

6.3.1.1.3 Emergency Core Cooling System Requirements for Protection from Physical Damage

The ECCS piping and components are protected against damage from movement, thermal stresses, the effects of the LOCA, and the safe shutdown earthquake (SSE).

The ECCS is protected against the effects of pipe whip which might result from piping failures up to and including the LOCA. This protection is provided by separation, pipe whip restraints, or energy absorbing materials. Any of these three methods is applied to provide protection against damage to ECCS piping and components which otherwise could result in a reduction of ECCS effectiveness to an unacceptable level.

Physical separation outside the drywell is achieved as follows:

a. The ECCS is separated into three functional groups:

1. HPCS

2. LPCS and LPCI loop A with 100% service water and one RHR heat exchanger

3. LPCI loops B and C with 100% service water and one RHR heat exchanger

b. The equipment in each group is separated from that in the other two groups. In addition, HPCS and the reactor core isolation cooling (RCIC) (which is not an ECCS) are separated.

c. Separation barriers exist between the functional groups and between HPCS and RCIC as required to ensure that environmental disturbances affecting one functional group will not affect the remaining groups.

6.3.1.1.4 Emergency Core Cooling System Environmental Design Basis

The only active components in the HPCS, LPCS, or LPCI systems located in the drywell are the check valves. These safety-related, injection/isolation check valves are qualified for the

accident environmental requirements specified in Section 3.11 and are installed above the expected flood level in the drywell. The ADS valves are located in the drywell and are qualified to the accident environmental conditions specified in Section 3.11.

The balance of the ECCS equipment (e.g., pumps, motors) is qualified for accident environmental requirements specified in Section 3.11.

Note: "Qualification" of safety-related mechanical (SRM) equipment is not part of the Columbia Generating (CGS) Station Environmental Qualification (EQ) 10 CFR 50.49 program but is part of the process that maintains the plant design basis.

6.3.1.2 Summary Descriptions of Emergency Core Cooling System

The ECCS injection network consists of an HPCS system, an LPCS system, and the LPCI mode of the RHR system. The ADS assists the injection network under certain conditions. These systems are briefly described in this section as an introduction to more detailed system descriptions in Section 6.3.2.

6.3.1.2.1 High-Pressure Core Spray

The HPCS pumps water through a peripheral ring spray sparger mounted above the reactor core. Coolant is supplied over the entire range of system operation pressures. The primary purpose of HPCS is to maintain reactor vessel inventory after small breaks which do not depressurize the reactor vessel. The HPCS also provides spray cooling heat transfer during breaks which uncover the core. The standby liquid control (SLC) system also injects to the reactor pressure vessel (RPV) by means of the HPCS core spray header. An SLC injection will occur with HPCS flow either on or off.

6.3.1.2.2 Low-Pressure Core Spray

The LPCS is an independent loop similar to the HPCS, the primary difference being the LPCS delivers water over the core at low reactor pressures. The primary purpose of the LPCS is to provide inventory makeup and spray cooling during large breaks which uncover the core. When assisted by the ADS, LPCS also provides protection for small breaks.

6.3.1.2.3 Low-Pressure Coolant Injection

The LPCI is an operating mode of the RHR system. Three pumps deliver water from the suppression pool to the bypass region inside the shroud through three separate reactor vessel penetrations to provide inventory makeup following large pipe breaks. When assisted by the ADS, LPCI also provides protection for small breaks.

6.3.1.2.4 Automatic Depressurization System

The ADS utilizes seven of the reactor safety/relief valves (SRVs) to reduce reactor pressure during small breaks in the event of HPCS failure. When the vessel pressure is reduced to within the capacity of the low pressure systems (LPCS and LPCI), the systems provide inventory makeup so that acceptable postaccident temperatures are maintained in the core.

6.3.2 SYSTEM DESIGN

6.3.2.1 Schematic Piping and Instrumentation Diagrams

The process and flow diagrams for the ECCS are specified in the various Sections of 6.3.2.2.

6.3.2.2 Equipment and Component Descriptions

The starting signal for the ECCS comes from at least two independent and redundant sensors of drywell pressure and low reactor water level, except ADS which requires low reactor water level and indication that LPCI or LPCS is available. The ECCS is actuated automatically and requires no operator action during the first 10 minutes following the accident.

The preferred source of power for all three ECCS divisions is from regular ac power to the plant. Regular ac power is from the main transformers [TR-N(1) and (2)] during plant operation or from the startup transformer (TR-S) (an offsite power source) when the main generator is off-line. Should regular ac power be lost, Division 1 (LPCS and LPCI loop A) and Division 2 (LPCI loops B and C) would be transferred to a second offsite power supply and backup transformer (TR-B). Division 3 (HPCS) would be powered from its onsite standby diesel. If the backup transformer were also lost, Divisions 1 and 2 would then be powered from their respective and independent onsite standby diesels. A more detailed description of the power supplies for the ECCS is contained in Section 8.3.

6.3.2.2.1 High-Pressure Core Spray System

Process and flow diagrams are shown in Figures 6.3-3 and 6.3-4. The HPCS system consists of a single motor-driven centrifugal pump, a spray sparger in the reactor vessel located above the core (separate from the LPCS sparger), and associated system piping, valves, controls, and instrumentation. The system is designed to operate from regular ac or from a standby diesel generator supply if offsite power is not available. The system is designed to the requirements of ASME Section III.

With the exception of the check valve on the discharge line, all active HPCS equipment is located outside the primary containment. Suction piping is provided from the condensate storage tanks and the suppression pool. This arrangement provides HPCS the capability to use high quality water from the condensate storage tanks. In the event that the condensate storage

water supply becomes exhausted or is not available, automatic switchover to the suppression pool water source will ensure a closed cooling water supply for continuous operation of the HPCS system. The HPCS pump suction is also automatically transferred to the suppression pool if the suppression pool water level exceeds a prescribed value. The condensate storage tanks contain a reserve of approximately 135,000 gal of water just for use by HPCS and RCIC.

Remote controls for operating the motor-operated components and diesel generator are provided in the main control room. The HPCS controls and instrumentation are described in Section 7.3.1.

The system is designed to pump water into the reactor vessel over a wide range of pressures. For small breaks that do not result in rapid reactor depressurization, the system maintains reactor water level. For large breaks the HPCS system cools the core by a spray. The HPCS also provides for core cooling in the event of a station blackout. If a LOCA should occur, a low water level signal or a high drywell pressure signal initiates the HPCS and its support equipment. The system can also be manually placed in operation.

The HPCS injection automatically stops with a high water level in the reactor vessel by signaling the injection valve to close and it automatically starts again when a low water level signals the injection valve to open. The HPCS system also serves as a back-up to the RCIC system in the event the reactor becomes isolated from the main condenser during operation and feedwater flow is lost.

The HPCS system head flow characteristic used for LOCA analyses is shown in Figure 6.3-5. When the system is started, initial flow rate is established by primary system pressure. As vessel pressure decreases, flow will increase.

When vessel pressure reaches 200 psid* the system reaches rated core spray flow. The HPCS motor size is based on peak horsepower requirements.

The elevation of the HPCS pump is sufficiently below the water level of both the condensate storage tanks and the suppression pool to provide a flooded pump suction and to meet pump net positive suction head (NPSH) requirements with the containment at atmospheric pressure and the suction strainer bed entrained with debris washed into the wetwell following a LOCA. The available NPSH at the pump suction is sufficient to meet the NPSH required (see Section 6.3.2.2.6). The available NPSH also ensures that no cavitation occurs anywhere in the pump suction line between the wetwell strainers and the pump suction.

A motor-operated valve is provided in the suction line from the suppression pool. The valve is located as close to the suppression pool penetration as practical. This valve is used to isolate the suppression pool water source when HPCS system suction is from the condensate storage

* psid - differential pressure between the reactor vessel and the suction source.

system and to isolate the system from the suppression pool in the event of a leak in the HPCS system.

A check valve, flow element, and restricting orifice are provided in the HPCS discharge line from the pump to the injection valve. The check valve is located below the minimum suppression pool water level and is provided so the piping downstream of the valve can be maintained full of water by the discharge line fill system. The flow element is provided to measure system flow rate during LOCA and test conditions and for automatic control of the minimum low flow bypass gate valve. The measured flow is indicated in the main control room. The restricting orifice was sized during the system preoperational test to limit system flow to prescribed values.

A low flow bypass line with a motor-operated gate valve connects to the HPCS discharge line upstream of the check valve on the pump discharge line. The line bypasses water to the suppression pool to prevent pump damage from overheating when other discharge line valves are closed. The valve automatically closes when flow in the main discharge line is sufficient to provide required pump cooling.

To ensure continuous core cooling, primary containment isolation does not interfere with HPCS operation.

The HPCS system incorporates relief valves to protect the components and piping from inadvertent overpressure. One relief valve with required capacity is located on the discharge side of the pump downstream of the check valve to relieve thermally-expanded fluid or leakage. A second relief valve is located on the suction side of the pump. The HPCS components and piping are positioned to avoid damage from the physical effects of design basis accidents such as pipe whip, missiles, high temperature, pressure, and humidity. The HPCS equipment and support structures are designed in accordance with Seismic Category I criteria. The system is assumed to be filled with water for seismic analysis.

Provisions are included in the HPCS system which will permit the HPCS system to be tested. These provisions are

a. Active HPCS components are testable during normal plant operation and/or during shutdown,

b. A full flow test line is provided to route water from and to the condensate storage tanks without entering the RPV,

c. A full flow test line is provided to route water from and to the suppression pool without entering the RPV,

d. Instrumentation is provided to indicate system performance during normal and test conditions,

e. Check valves and motor-operated valves are capable of operation for test purposes, and

f. System relief valves are removable for bench-testing during plant shutdown.

6.3.2.2.2 Automatic Depressurization System

If the HPCS cannot maintain reactor water level, the ADS, which is independent of any other ECCS, reduces the reactor pressure so that flow from LPCI and LPCS systems can enter the reactor vessel for core cooling.

The ADS employs seven of the nuclear system pressure relief valves to relieve high pressure steam to the suppression pool. The design, location, description, operational characteristics, and evaluation of the pressure relief valves are discussed in detail in Section 5.2.2. The operation of the ADS is discussed in Section 7.3.1.

6.3.2.2.3 Low-Pressure Core Spray System

Process and flow diagrams are shown in Figures 6.3-4 and 6.3-6. The LPCS system consists of a single motor-driven centrifugal pump, a spray sparger in the reactor vessel above the core (separate from the HPCS sparger), piping and valves to convey water from the suppression pool to the sparger, and associated controls and instrumentation. Design pressure and temperature of system components are based on ASME Section III.

The LPCS is designed to provide cooling to the reactor core only when the reactor vessel pressure is low, as is the case for large LOCA break sizes. However, when the LPCS operates in conjunction with the ADS, the effective core cooling capability of the LPCS is extended to all break sizes because the ADS can rapidly reduce the reactor vessel pressure to the LPCS operating range. The system head flow characteristic assumed for LOCA analyses is shown in Figure 6.3-1.

The LPCS pump and all motor-operated valves can be operated individually in the control room. Operating flow and valve position indication is provided in the control room.

To ensure continuity of core cooling, primary containment isolation signals do not interfere with LPCS operation.

The LPCS discharge line to the reactor is provided with two isolation valves. One of these valves is a check valve located inside the drywell as close as practical to the reactor vessel. The LPCS injection flow causes this valve to open during LOCA conditions (i.e., no power is

required for valve actuation during LOCA). If the LPCS line should break outside the containment, the check valve in the line inside the drywell will prevent loss of reactor water outside the containment.

The other isolation valve (which is also referred to as the LPCS injection valve) is a motor-operated gate valve located outside the primary containment as close as practical to LPCS discharge line penetration into the containment. The valve is capable of opening against a differential pressure equal to normal reactor pressure, minus the minimum LPCS system shutoff pressure. A permissive switch prevents the valve operator from being energized to open until the reactor vessel pressure is less than the value in Table 6.3-1. This valve is normally closed to back up the inside check valve for containment integrity purposes. A test line is provided between the two valves. The test connection line has two normally closed valves to ensure containment integrity.

The LPCS system components and piping are arranged to avoid damage from the physical effect of design-basis accidents, such as pipe whip, missiles, high temperature, pressure, and humidity.

With the exception of the check valve on the discharge line, all active LPCS equipment is located outside the primary containment.

A check valve, flow element, and restricting orifice are provided in the LPCS discharge line from the pump to the injection valve. The check valve is located below the minimum suppression pool water level and is provided so the piping downstream of the valve can be maintained full of water by the discharge line fill system. The flow element is provided to measure system flow rate during LOCA and test conditions and for automatic control of the minimum low flow bypass globe valve. The measured flow is indicated in the main control room. The restricting orifice was sized during the system preoperational test to limit system flow to prescribed values.

A low flow bypass line with a motor-operated globe valve connects to the LPCS discharge line upstream of the check valve on the pump discharge line. The line bypasses water to the suppression pool to prevent pump damage due to overheating when other discharge line valves are closed or reactor pressure is greater than the LPCS system discharge pressure following system initiation. The valve automatically closes when flow in the main discharge line is sufficient to provide required pump cooling.

The LPCS flow passes through a motor-operated pump suction valve that is normally open. This valve can be closed from the control room to isolate the LPCS system from the suppression pool should a leak develop in the system. This valve is located as close to the suppression pool penetration as practical. Since the LPCS takes a suction on the suppression pool, a closed loop is established for the water escaping from the break.

The LPCS pump is located in the reactor building sufficiently below the water level in the suppression pool to ensure a flooded pump suction and to meet pump NPSH requirements with the containment at atmospheric pressure and postaccident debris entrained on the beds of the suction strainers. A pressure gauge is provided to indicate the suction head. The available NPSH at the pump suction is sufficient to meet the NPSH required (see Section 6.3.2.2.6). The LPCS system incorporates relief valves to prevent the components and piping from inadvertent overpressure conditions. One relief valve is located on the pump discharge. A second relief valve is located on the suction side of the pump.

The LPCS system piping and support structures are designed in accordance with Seismic Category I criteria. The system is assumed to be filled with water for seismic analysis. Provisions are included in the LPCS system which will permit the system to be tested. These provisions are

a. All active LPCS components are testable during normal plant operation and/or shutdown,

b. A full flow test line is provided to route water from and to the suppression pool without entering the RPV,

c. A suction test line supplying high quality water is provided to test pump discharge into the RPV during normal plant shutdown,

d. Instrumentation is provided to indicate system performance during normal and test operations,

e. Check valves and motor-operated valves are capable of operation for test purposes, and

f. Relief valves are removable for bench-testing during plant shutdown.

6.3.2.2.4 Low-Pressure Coolant Injection System

The LPCI system is an operating mode of the RHR system. The LPCI system is automatically actuated by low water level in the reactor and/or high pressure in the drywell and, when reactor vessel pressure is low enough, uses the three RHR motor-driven pumps to draw suction from the suppression pool and inject cooling water flow into the reactor core to cool the core by flooding. Each loop has its own suction and discharge piping and separate vessel nozzle which connects with the core shroud to deliver flooding water on top of the core. The system is a high volume core flooding system. The design pressure and temperature of system components is based on ASME Section III.

The LPCI system, like the LPCS system, is designed to provide cooling to the reactor core only when the reactor vessel pressure is low, as is the case for large LOCA break sizes. However, when the LPCI operates in conjunction with the ADS, then the effective core cooling capability of the LPCI is extended to all break sizes because the ADS will rapidly reduce the reactor vessel pressure to the LPCI operating range. The head flow characteristic assumed in the LOCA analyses for the LPCI system is shown in Figure 6.3-2.

The process and flow diagram for the RHR system is contained in Section 5.4.7.

The pumps, piping, controls, and instrumentation of the LPCI loops are separated and protected so that no single physical event, including missiles, can make all loops inoperable.

To ensure continuity of core cooling, primary containment isolation signals do not interfere with the LPCI mode of operation.

Each LPCI discharge line to the reactor is provided with two isolation valves. The valve inside the drywell is a check valve and the valve outside the drywell is a motor-operated gate valve. No power is required to operate the check valve inside of the drywell since it opens with LPCI injection flow. If a break were to occur outboard of the check valve, the valve would shut isolating the reactor from the line break.

The motor-operated isolation valve outside of the drywell is also the LPCI injection valve and it is located as close as practical to the drywell wall. It is capable of opening against a differential pressure equal to normal reactor pressure minus the upstream pressure with the RHR pump running at minimum flow. A permissive switch prevents the valve operator from energizing open until the reactor vessel pressure is as shown in Table 6.3-1.

Figure 5.4-16 process diagram shows the additional flow paths available other than the LPCI mode. However, the low water level or high drywell pressure signals which automatically initiate the LPCI mode are also used to isolate all other modes of operation and revert system valves to the LPCI lineup. Inlet and outlet valves from the heat exchangers however receive no automatic signals. The heat exchanger inlet valves are key-locked open and the outlet valves are administratively controlled in the open position. The RHR system continues in the LPCI mode until the operator determines that another mode of operation is needed (such as containment cooling) and takes action to manually initiate that mode. The LPCI will not be diverted to any other mode of operation until adequate core cooling is ensured. No operator actions are needed during the short term.

A check valve in the pump discharge line is used together with a discharge line fill system to keep the discharge lines full of water, thereby, preventing water hammer on pump start. A flow element in each pump discharge line is used to provide a measure of system flow and to originate automatic signals for control of the pump minimum flow valves. The minimum flow

valve permits a small flow to the suppression pool in the event no discharge valve is open or in the case of a LOCA where vessel pressure is higher than pump shutoff head.

Using the suppression pool as the source of water, the LPCI pump establishes a closed loop for recirculation of LPCI water escaping from the break.

The design pressures and temperatures, at various points in the system, during each of the several modes of operation of the RHR system can be obtained from the RHR process diagram in Figures 5.4-16 and 5.4-17.

The LPCI pumps and equipment are described in detail in Section 5.4.7. The RHR heat exchangers are not associated with the emergency core cooling function. The heat exchangers are discussed in Section 6.2.2. The portions of the RHR required for accident protection including support structures are designed in accordance with Seismic Category I criteria. The available NPSH at the pump suction is sufficient to meet the NPSH required (see Section 6.3.2.2.6). The characteristics for the RHR (LPCI) pumps are shown in Figures 5.4-18, 5.4-19, and 5.4-20.

The LPCI system incorporates a relief valve on each of the pump discharge lines which protects the components and piping from overpressure conditions.

There is a relief valve on the common suction header from the reactor recirculation piping for loops A and B. In addition, each of the three suction pipes from the suppression pool for loops A, B, and C is provided with a relief valve.

The following provisions are included in the LPCI system to permit testing of the system:

a. Active LPCI components are designed to be testable during normal plant operation and/or during plant shutdown,

b. A discharge test line is provided for the three pumps to route suppression pool water back to the suppression pool without entering the RPV,

c. A suction test line, supplying high quality water, is provided to test discharge into the RPV during normal plant shutdown,

d. Instrumentation is provided to indicate system performance during normal and test operations,

e. Check valves and motor-operated valves are capable of operation for test purposes,

f. Lines taking suction from the recirculation system are provided for loops A and B to provide for shutdown cooling and to test pump discharge into the RPV during plant shutdown, and

g. System relief valves are removable for bench-testing during plant shutdown.

6.3.2.2.5 Emergency Core Cooling System Discharge Line Fill System

The ECCS discharge line fill system is designed to maintain the pump discharge lines in a filled condition to ensure the time between the signal to start the pump and the initiation of flow into the RPV is minimized.

Since the ECCS discharge lines are elevated above the suppression pool, check valves are provided near the pumps to prevent back flow from emptying the lines into the suppression pool. To ensure that any leakage from the discharge lines is replaced and the lines are always kept full, a water leg pump system is provided for each of the three ECCS divisions. The power supply to these pumps is classified as essential when the main ECCS pumps are not operating. Indication is provided in the control room as to whether the water leg pumps are operating.

6.3.2.2.6 Emergency Core Cooling System Suction Strainers

NRC Bulletin 96-03, Potential Plugging of Emergency Core Cooling Suction Strainers by Debris in Boiling Water Reactors, requested that the ECCS suction strainers be evaluated with regard to the potential for plugging during accident conditions. The ECCS suction strainers were replaced to conform with the requirements of the bulletin.

There are two suction strainers for each ECCS pump. Each strainer is Quality Class I, Seismic Category I, Cleanliness Class B, and has a service rating of ANSI 150#. Strainer materials and fabrication meet ASME Section III, Class 2 requirements. The “N” stamp is not applied since the strainers cannot be hydrostatically tested. The strainer body is stainless steel 304 or 316, or engineer approved equal, suitable for submergence in high quality water.

The ECCS suction strainers have a cylindrical stacked disk configuration, as shown on Figures 6.3-7 and 6.3-8. The strainers are attached to ANSI 150# RF flanges. The following information identifies the overall dimensions, rated flow conditions, and other considerations used in the design of the ECCS strainers.

Strainer sizes were selected based on several criteria. The strainer beds had to be big enough to entrain post-LOCA wetwell debris without exceeding the maximum allowable head losses. The maximum head losses across the strainers were determined based on maintaining sufficient pressure in the pump suction lines to preclude cavitation under run-out conditions with the

suppression pool water at 204.5°F. The strainer sizes were also limited by physical constraints in the suppression pool and hydrodynamic design considerations.

The screen size for the suction strainers on the RHR system is based on the more restrictive criteria set by the pump manufacturer or the spray nozzle orifice opening. The pump manufacturer imposed a maximum particle size of 0.09375 in., based on the size of the smallest orifice/flow path in the pump mechanical seal. This is significantly more restrictive than the requirement imposed by the spray nozzles which have an orifice opening of 0.26563 in. Accordingly, the strainers were specified to prevent the passage of particles 0.09375 in. or greater. The diameter of the holes in the strainer perforated plate is 0.09375 in. Particles smaller than 0.09375 in. (3/32 in.) would normally pass through the ECCS strainers. However, following a LOCA, fibrous debris is postulated to be in the wetwell. This debris, once deposited on the strainers, would cause particles finer than 3/32 in. to be entrained on the strainer bed.

Hydrodynamic and pressure loads were developed which were applied concurrently with the load due to process flow through the strainer. The hydrodynamic pressure loads on the strainer address actual strainer geometries and the drag effects resulting from the strainers, dimensional, and porous properties.

The following information provides details regarding location, size, and submergence of each ECCS strainer, relative to the minimum suppression pool water level of 466 ft 0.75 in. The location of the RHR strainers is also shown in Figure 6.2-32.

ECCS Pump	Quantity	Centerline Elevation	Approximate Azimuth	Minimum Submergence (ft)	Outer Diameter (in.)	Length (in.)
RHR-P-2A	2	447 ft	26°	17.1	47.5	28
RHR-P-2B	2	447 ft	153°	17.1	47.5	28
RHR-P-2C	1	447 ft 7 in.	38°	17.0	36	42
RHR-P-2C	1	447 ft 7 in.	38°	17.0	36	70
LPCS-P-1	1	447 ft 7 in.	58°	17.0	36	36
LPCS-P-1	1	447 ft 7 in.	38°	17.0	36	76
HPCS-P-1	2	438 ft 9 in.	90°	25.8	36	51

During normal operation, corrosion products accumulate in the suppression pool forming a sediment on the pool surfaces. Following a LOCA, those sediments are assumed to be resuspended in the suppression pool water and entrained on the strainer beds, together with other debris.

A spectrum of breaks were analyzed to determine the maximum amount of debris which could be in the wetwell following a LOCA. The ECCS strainers have been designed to provide a satisfactory head loss after entraining all wetwell debris following a LOCA. The analysis was

performed using the guidance provided in Reference 6.3-3 and determined the maximum postulated quantities of debris that would be in the suppression pool following a LOCA. The debris types that are assessed in the analysis include the following:

Fiber	TempMat Fiber Insulation, miscellaneous fiber sources (i.e., cloth, rope)
RMI	Reflective Metal Insulation foils, equipment tags (modeled as RMI)
Sediment	Suppression pool sediment, dirt, dust, and concrete dust
Coatings	Qualified epoxy coating within the break zone of influence
Coatings	Unqualified (latent) paint in drywell
Coatings	Zinc unqualified coating in wetwell
Labels	Adhesive backed labels
Rust	Rust flakes from uncoated surfaces in drywell and wetwell

A portion of the strainer surface area was reserved (presumed unavailable in the analysis) to provide for additional design margin.

The debris that is postulated to reach the suppression pool is assumed to be fully entrained on the strainers of ECCS pumps that are available to operate, in proportion to their relative flow rates.

Calculations demonstrating the acceptability of the new strainers and the NPSH for all ECCS pumps were performed in accordance with Regulatory Guide 1.1.

NPSH = Wetwell air space pressure + static pressure - friction losses - vapor pressure

The NPSH calculations are based on a peak suppression pool temperature of 204.5°F and bounding flowrates for the time of peak pool temperature. This is the bounding configuration for minimizing available NPSH. The analysis which established the 204.5°F temperature used the following conservative assumptions:

a. The suppression pool is the only heat sink available to the containment system. No credit is taken for passive structural heat sinks in the drywell, suppression chamber air space, or in the suppression pool;

b. No cooling is assumed for 10 minutes. After 10 minutes, the RHR heat exchangers are assumed to remove energy by recirculating water from the suppression pool through the RHR heat exchangers; and

c. The suppression pool volume is at minimum Technical Specifications level (112,197 ft^3), with an initial condition of 90°F. Standby service water, which cools the RHR heat exchanger, is also at 90°F.

In addition, the NPSH calculation used the following conservative assumptions:

a. The suppression chamber is assumed to be at 14.7 psia throughout the event,

b. No credit is taken for expansion of the suppression pool volume from its initial volume at 90°F to 204.5°F, and

c. The NPSH required is the pump manufacturer's NPSH required plus two feet.

Vapor pressure at the peak suppression pool temperature of 204.5°F is 12.6 psia (30.3 ft). In accordance with Regulatory Guide 1.1, "no increase in containment pressure from that present prior to postulated loss-of-coolant accidents" is assumed. Therefore, the wetwell air space pressure is assumed to be 0 psig. Based on a minimum suppression pool level of 466 ft 0.75 in., summary NPSH data for each of the ECCS systems is provided below:

Summary of ECCS Pumps NPSH	RHR	LPCS	HPCS
NPSH available at pump suction (ft)	32.2	37.7	40.7
NPSH required (ft)	19.6	15	26
NPSH margin at pump suction (ft)	12.6	22.7	14.7

The ECCS strainers were designed to ensure that with the strainers entrained with debris there was sufficient pressure in the suction line to preclude cavitation at the high points of the suction lines.

The strainer designs are based upon the suppression pool temperature and pressure of 204.5°F and 14.7 psia, respectively. The actual suppression pool atmosphere is calculated to be higher than 14.7 psia following a LOCA, adding pressure to the suction lines, and increasing the margin to cavitation at the lines' high points.

With no operator action, the RHR valve alignment will result in approximately 40% of its LPCI flow through the RHR heat exchangers, with the balance of the flow through the open heat exchanger bypass valve. For a design basis recirculation line break, the partial flow through the heat exchangers will remove heat at about 75% of their design heat rate. At 10 minutes, the operator must close the bypass valve to achieve full cooling.

There are sufficient margins in the NPSH and suppression pool analyses to ensure that the lack of operator action for 20 minutes will not challenge the required NPSH for the ECCS pumps at the pump nozzles or allow cavitation anywhere in the suction lines.

All ECCS suction lines in the suppression pool have been designed with large diameter piping (24 in.) to reduce the inlet velocity (maximum 6.67 ft/sec). This inlet velocity will support a vortex of no more than 2.5 ft in height. The inlet to each of the ECCS suction lines is at least 17 ft below the minimum suppression pool level. Vortex formation at the ECCS pump inlets as a result of lowered suppression pool level is thus not considered a problem.

Since it has been conservatively established that all ECCS suction lines are adequately submerged to preclude formation of an undesirable vortex, no confirmatory preoperational testing is required.

6.3.2.3 Applicable Codes and Classifications

The applicable codes and classification of the ECCS are specified in Section 3.2. All vital piping systems and components (pumps, valves, etc.) for the ECCS comply with ASME Section III of the Edition and Addenda that were mandatory at the time of their order or a later Edition and Addenda. The piping and components of the ECCS which form part of the reactor coolant pressure boundary are Safety Class 1. The remaining piping and components are Safety Class 2, 3, or G, as indicated in Section 3.2. The equipment and piping of the ECCS are designed to the requirements of Seismic Category I. This seismic designation applies to all structures and equipment essential to the core cooling function. The IEEE codes applicable to the controls and power supplies are specified in Section 7.1.

6.3.2.4 Materials Specifications and Compatibility

Materials specifications and compatibility for the ECCS are presented in Section 6.1. Nonmetallic materials such as lubricants, seals, packings, paints and primers, insulation, as well as metallic materials, etc., are selected as a result of engineering evaluation for compatibility with other materials in the system and the surroundings pertaining to chemical, radiolytic, mechanical, and nuclear effects. Materials used were reviewed and evaluated and found to be acceptable with regard to radiolytic and pyrolytic decomposition and attendant effects on safe operation of the ECCS.

6.3.2.5 System Reliability

A single failure analysis shows that no single failure prevents the starting of the ECCS or the delivery of coolant to the reactor vessel. No individual system of the ECCS is single failure proof, with the exception of the LPCI and ADS. Therefore, it is expected that single failures will disable individual systems of the ECCS. The consequences (remaining available systems) of the most severe single failures are shown in Table 6.3-3. The LOCA caused by a pipe

break in an ECCS, with the single failure of a DG in another division and the loss of offsite power, will result in the minimum available ECCS.

During a LOCA, for protection against and mitigation of a single passive ECCS failure (pump seal or valve bonnet leak), a Class 1E level instrument is mounted just above floor level in each ECCS pump room and in the RCIC pump room to detect such failures (after 24 hours) during long-term cooling (assuming loss of the other non-Class 1E leak detection equipment). The maximum leak rate postulated is 23 gpm, which results from the total failure of an RHR pump seal. Operator action will isolate the source of the leak after detection and before it has any adverse effects on ECCS operation.

The functional testing and calibration of the ECCS is prescribed by the Technical Specifications.

6.3.2.6 Protection Provisions

Protection provisions are included in the design of the ECCS. Protection is afforded against missiles, pipe whip, and flooding. Also accounted for in the design are thermal stresses, loadings from a LOCA, and seismic effects.

The ECCS piping and components located inside the ECCS and RCIC/CRD pump rooms are protected from flooding and missiles generated outside the room in which the particular pump is located by the reinforced-concrete structure, including doors and wall penetrations, which minimize the effects of missiles and flooding. Each pump room contains the majority of the active components of one emergency core cooling or RCIC/CRD subsystem.

The ECCS is protected against the effects of pipe whip which might result from piping failures up to and including the design basis LOCA. This protection is provided by separation, pipe whip restraints, and energy absorbing materials. These three methods are applied to provide protection against damage to piping and components of the ECCS which otherwise could result in a reduction of ECCS effectiveness.

The component supports which protect against damage from movement and from seismic events are discussed in Section 5.4.14. The methods used to provide assurance that thermal stresses do not cause damage to the ECCS are described in Section 3.9.3.

6.3.2.7 Provisions for Performance Testing

Periodic system and component testing provisions for the ECCS are described in Section 6.3.2.2 as part of the individual system descriptions and in Section 6.3.1.1.2 as part of the overall system description.

6.3.2.8 Manual Actions

The ECCS is actuated automatically and requires no operator action during the first 10 minutes following an accident. During the long-term cooling period (after 10 minutes), the operator will initiate the RHR system heat exchangers in the suppression pool cooling mode.

6.3.3 EMERGENCY CORE COOLING SYSTEM PERFORMANCE EVALUATION

The ECCS performance is evaluated using analytical methods in compliance with the requirements of 10 CFR 50 Appendix K to show conformance to the acceptance criteria of 10 CFR 50.46. The methods used analyze the full LOCA break spectrum, including small, intermediate, and large size breaks. A spectrum of breaks and single failures is run using a consistent set of initial conditions to determine the resultant peak clad temperature (PCT). The PCT is calculated for the potentially limiting events and the design basis break is identified based on that parameter. The break spectrum analysis results confirm that considerable margin exists to the acceptance criteria of 10 CFR 50.46. The break spectrum analysis addresses two loop and single loop operation. The following Chapter 15 accidents require ECCS operation:

a. Steam system piping break - outside containment, Section 15.6.4,
b. Loss-of-coolant accidents - inside containment, Section 15.6.5, and
c. Feedwater line break - outside containment, Section 15.6.6.

The baseline analyses to verify the adequacy of ECCS design were performed by the NSSS vendor for the initial core, a GE 8 x 8 fueled core. The adequacy of the ECCS design was verified subsequently for Single Loop Operation (SLO), Maximum Extended Load Line Limit Analysis (MELLLA), reactor power uprate, changes in fuel design, and adjustable speed drive reactor recirculation pumps.

The NSSS vendor analysis established the large break in the reactor recirculation suction line, with failure of the HPCS diesel generator as the limiting design basis accident (DBA) event. The NSSS vendor analyses are described in References 6.3-1, 6.3-2, 6.3-4, 6.3-5, and 6.3-7.

For the GNF2 analysis the small break of 0.07 ft^2 in the recirculation suction line is limiting, with top peaked axial power shape and failure of the HPCS diesel generator assumed. The GNF2 analysis is described in Reference 6.3-16.

A summary description of the reload design basis LOCA analysis methods is provided in this section.

6.3.3.1 Emergency Core Cooling System Bases for Technical Specifications

The MAPLHGRs calculated in this performance evaluation provide a basis to ensure conformance with the acceptance criteria of 10 CFR 50.46. The MAPLHGR limits are determined from ECCS limits (PCT) only, because the thermal-mechanical limits are incorporated into the LHGR limits. The MAPLHGR limits are provided in the COLR. Testing requirements for ECCS are discussed in Section 6.3.4. Limits on minimum suppression pool water level are discussed in Section 6.2.

6.3.3.2 Acceptance Criteria for Emergency Core Cooling System Performance

The applicable acceptance criteria, extracted from 10 CFR 50.46, are listed and a discussion of conformance is provided.

Criterion 1, Peak Cladding Temperature
"The calculated maximum fuel element cladding temperature shall not exceed 2200° F."

Criterion 2, Maximum Cladding Oxidation
"The calculated total local oxidation of the cladding shall nowhere exceed 0.17 times the total cladding thickness before oxidation."

Criterion 3, Maximum Hydrogen Generation
"The calculated total amount of hydrogen generated from the chemical reaction of the cladding with water or steam shall not exceed 0.01 times the hypothetical amount that would be generated if all the metal in the cladding cylinder surrounding the fuel, excluding the cladding surrounding the plenum volume, were to react."

- Compliance with Criteria 1, 2, and 3 is summarized in Table 6.3-5 and Figure 6.3-9.

Criterion 4, Coolable Geometry
"Calculated changes in core geometry shall be such that the core remains amenable to cooling."

- Conformance to Criterion 4 is demonstrated by conformance to Criteria 1 and 2.

Criterion 5, Long-Term Cooling
"After any calculated successful initial operation of the ECCS, the calculated core temperature shall be maintained at an acceptably low value and decay heat shall be removed for the extended period of time required by the long-lived radioactivity remaining in the core."

- Compliance with this criterion was demonstrated during the original and uprate review of the plant ECCS design (Reference 6.3-1 and 6.3-7). Compliance was also demonstrated for GNF2 fuel (Reference 6.3-6) Briefly summarized, the core remains covered to at least the jet pump suction elevation and spray cooling cools the uncovered region. Without core spray, two LPCI pumps alone submerge the core to an equilibrium level above the jet pump suction elevation and prevent substantial heatup and peak cladding temperature.

6.3.3.3 Single Failure Considerations

The consequences of potential operator errors and single failures and potential for submergence of valve motors in the ECCS are discussed in Section 6.3.2. The following bounding single failures are described in Table 6.3-3:

a. Low-pressure coolant injection emergency diesel generator, which powers two LPCI pumps,

b. Low-pressure core spray emergency diesel generator, which powers one LPCI pump and one LPCS pump, and

c. High-pressure core spray.

The systems that remain operational after these failures are shown in Table 6.3-3. For large breaks, failure of one of the diesel generators is, in general, the more severe failure. Substantial amounts of initial vessel inventory are lost through the break during the blowdown. With fewer systems available, there is less ECCS flow available for reflooding the core and the core will reflood later. The later reflooding results in higher peak cladding temperatures. For small breaks LOCAs, a HPCS failure is the worst single failure.

As shown in Table 6.3-3, at least one core spray system remains operational, if the break is not in the ECCS piping. Long term core cooling is also assured without core spray (Reference 6.3-6). Two LPCI pumps alone submerge the core to an equilibrium level above the jet pump suction elevation and prevent substantial heatup and peak cladding temperature increase.

If the break occurred in the HPCS or LPCS and the single failure were the other spray system, no core spray system would be available to provide long term cooling. Because the remaining core cooling systems would be able to maintain the water level above the top of the fuel, adequate core cooling is provided without a spray system.

6.3.3.4 System Performance During the Accident

In general, the system response to an accident is as follows:

a. Receiving an initiation signal,
b. A small lag time (to open all valves and have pumps to rated speed), and

c. ECCS flow entering the vessel.

Key operating parameters, fuel parameters and ECCS initiation parameters used in the LOCA analysis are provided in Tables 6.3-2a, 6.3-2b and 6.3-2c, respectively. The representative sequences of events are presented in Tables 6.3-4a and 6.3-4b. System flow curves are provided in Figures 6.3-1 and 6.3-2.

Operator action is not required during the short-term cooling period following the LOCA. During the long-term cooling period (after 10 minutes), the operator may take actions to:

a. Use ECCS for vessel level control,

b. Use ADS or SRVs for vessel pressure control, or

c. Place systems into operation, such as containment cooling, standby liquid control, or drywell spray.

6.3.3.5 Use of Dual Function Components for Emergency Core Cooling System

With the exception of the LPCI system, the systems of the ECCS are designed only to cool the reactor core following a loss of reactor coolant. To this extent, components or portions of these systems (except for pressure relief) are not required for operation of other systems that have emergency core cooling functions, or vice versa. Because the ADS initiating signal or the overpressure signal opens the SRVs there is no conflict between the two SRV functions.

The LPCI subsystem uses the RHR pumps and some of the RHR valves and piping. When reactor water level is low or a high drywell pressure exists, the LPCI subsystem has priority through the valve control logic over the other RHR subsystems for containment cooling or shutdown cooling. Immediately following a LOCA, the RHR system is aligned to the LPCI mode.

The primary storage facility for ECCS water is the suppression pool which is not shared with any other systems except as a secondary source for RCIC. The RCIC system, although not an ECCS, may supply water to the reactor during LOCA conditions while reactor pressure is above the minimum credited pressure. Since any leakage from the core and safety/relief discharge drains back to the suppression pool, sufficient quantity of water is available for core cooling (see Table 6.2-4).

The condensate storage tanks comprise the normal water source for HPCS and RCIC. A minimum of 135,000 gal is required exclusively for RPV makeup. The HPCS and RCIC systems will automatically switch suction to the suppression pool when the minimum condensate storage tank supply is exhausted. The HPCS system will also automatically switch suction to the suppression pool when suppression pool level reaches a predetermined high level limit.

6.3.3.6 Emergency Core Cooling System Analyses for Loss-of-Coolant Accident

A LOCA may occur over a wide spectrum of break locations and sizes. Responses to the break vary significantly over the break spectrum. The largest possible break is a DEG; however, this is not necessarily the most severe challenge to the ECCS. Because of these complexities, an analysis covering the full range of break sizes and locations is required. The LOCA analysis also assumes a coincident loss of power and an additional single failure. See References 6.3-7 and 6.3-14 for more detail.

Regardless of the initiating break characteristics, the event response is separated into three phases; blow down, refill and reflood. The relative duration of each phase is dependant on break size and location.

During the blow down phase of the LOCA, there is a net loss of coolant inventory, an increase in fuel cladding temperature due to core flow degradation and, for the larger breaks, the core becomes fully or partially uncovered. There is a rapid decrease in pressure during the blow down phase. During the early phase of the depressurization, the exiting coolant provides core cooling. The HPCS and LPCS systems also provide some heat removal. The blow down phase is defined to end when LPCS reaches rated flow. When the LPCS diesel generator is the single failure, the blow down phase end is defined as when LPCS, if operational, would have reached rated flow.

During single loop operation (SLO) the break may occur in either loop. The results of a break in the inactive loop would be similar to those from a break in two-loop operation. The break in the active loop during SLO results in a more rapid loss of core flow and earlier degraded core conditions.

In the LOCA refill phase, the ECCS is functioning and there is a net increase of coolant inventory. During this phase the core sprays provide core cooling and, along with LPCI, supply liquid to refill the lower portion of the reactor vessel. In general, the core heat transfer to the coolant is less than the fuel decay heat rate and the fuel cladding temperature continues to increase during the refill phase.

In the reflood phase, the coolant inventory has increased to the point where the mixture level reenters the core region. During the core reflood phase, cooling is provided above the mixture level by entrained reflood liquid and below the mixture level by pool boiling. Sufficient coolant eventually reaches the core hot node and the fuel cladding temperature decreases, terminating the event.

6.3.3.6.1 Loss-of-Coolant Accident Description

Immediately after the postulated double-ended recirculation suction line break, vessel pressure and core flow begin to decrease. The initial pressure response is governed by the closure of

the main steam isolation valves and the relative values of energy added to the system by decay heat and energy removed from the system by the initial blowdown of fluid from the downcomer. The initial core flow decrease is rapid because the recirculation pump in the broken loop loses suction and almost immediately ceases to pump. The pump in the intact loop coasts down relatively slowly. This pump coast down governs the core flow response for the next several seconds. When the jet pump suctions uncover, calculated core flow decreases to near zero. When the recirculation pump suction nozzle uncovers, the pressure begins to decay more rapidly. As a result of the increased rate of vessel pressure loss, the initially subcooled water in the lower plenum saturates and flashes up through the core, increasing the core flow. This lower plenum flashing continues at a reduced rate for the next several seconds.

Heat transfer rates on the fuel cladding during the early stages of the blowdown are governed primarily by the core flow response. Nucleate boiling continues in the high power plane until shortly after the core flow loss that results from jet pump uncovery. Film boiling heat transfer rates then apply, with increasing heat transfer resulting from the core flow increase during the lower plenum flashing period. Heat transfer then slowly decreases until the high power axial plane uncovers. At that time, convective heat transfer is assumed to cease.

Water level inside the shroud remains high during the early states of the blowdown because of flashing of the water in the core. After a short time, the level inside the shroud has decreased to uncover the core. Several seconds later, the ECCS is actuated. As a result the vessel water level begins to increase. Some time later the lower plenum is filled and the core is then rapidly recovered.

The cladding temperature at the high power plane decreases initially because nucleate boiling is maintained, the heat input decreases, and the sink temperature decreases. A rapid, short duration cladding heatup follows the time of boiling transition when film boiling occurs and the cladding temperature approaches that of the fuel. The subsequent heatup is slower, being governed by decay heat and core spray heat transfer. Finally the heatup is terminated when the core is recovered by the accumulation of ECCS water.

6.3.3.6.2 Loss-of-Coolant Accident Analysis Procedures and Input Variables

The GE Hitachi Nuclear Energy ECCS-LOCA licensing evaluation methodologies are described in References 6.3-7 through 6.3-14. The GNF2 analysis is documented in Reference 6.3-16, consistent with References 6.3-1, 6.3-2 and 6.3-5. These vendor methodologies cover the time from the event until the reactor has been reflooded. The NSSS vendor, GE, performed the long term ECCS evaluation, as described in Reference 6.3-7. The evaluation documents that the ECCS satisfy the requirements described in Section 6.3.3.2. As documented in Reference 6.3-1, the reactor power uprate and the new fuel did not impact the conclusions reached in Reference 6.3-7.

6.3.3.6.2.1 LOCA Analysis Methodology, GE Hitachi Nuclear Energy

Several computer models are used in the LOCA analysis to determine the LOCA response. These models are LAMB, TASC, PRIME, and SAFER (References 6.3-7 through 6.3-14). Together, these models evaluate the short-term and long-term reactor vessel blowdown response to a pipe rupture, the subsequent core flooding by ECCS, and the final rod heatup.

The LAMB model analyzes the short-term blowdown phenomena for postulated large pipe breaks in which nucleate boiling is lost before the water level drops sufficiently to uncover the active fuel. The LAMB output (primarily core flow as a function of time) is used in the TASC model for calculating blowdown heat transfer and fuel dryout time.

The TASC model completes the transient short-term thermal-hydraulic calculation for large recirculation line breaks. "TASC" is used to predict the time and location of boiling transition and dryout. The time and location of boiling transition is predicted during the period of recirculation pump coastdown. When the core inlet flow is low, TASC also predicts the resulting bundle dryout time and location. The calculated fuel dryout time is an input to the long-term thermal-hydraulic transient model, SAFER.

The PRIME model provides the parameters to initialize the fuel stored energy and fuel rod fission gas inventory at the onset of a postulated LOCA for input to SAFER. PRIME also establishes the transient pellet-cladding gap conductance for input to both SAFER and TASC.

The SAFER model calculates the long-term system response of the reactor over a complete spectrum of hypothetical break sizes and locations. SAFER is compatible with the GESTR-LOCA fuel rod model for gap conductance and fission gas release. SAFER calculates the core and vessel water levels, system pressure response, ECCS performance, and other primary thermal-hydraulic phenomena occurring in the reactor as a function of time. SAFER realistically models all regimes of heat transfer that occur inside the core, and provides the heat transfer coefficients (which determine the severity of the temperature change) and the resulting PCT as functions of time. For GE11 and later fuel analysis with the SAFER code, the part length fuel rods are treated as full-length rods, which conservatively overestimate the hot bundle power.

6.3.3.6.2.2 Deleted.

6.3.3.6.2.3 LOCA Analysis Input Variables

The significant input variables used by the LOCA codes are listed in Table 6.3-1, Table 6.3-2a and Table 6.3-2b. The limiting calculation was performed at 3629 MWt (102.4% power) and 108.5 Mlb/hr (100% core flow), References 6.3-5 and 6.3-16. Alternate operating modes of SLO, increased core flow (ICF), reduced core flow (MELLLA) and reduced feedwater temperature (FFWTR/FWHOOS) have been confirmed as non-limiting.

6.3.3.7 Break Spectrum Calculations

Break spectrum analyses have been performed to establish the limiting break for the CGS boiling water reactor BWR5 reactor system. Previous analyses by GE, the NSSS vendor have shown that a large pipe break in the recirculation line on the suction side of the recirculation pump is the most limiting break for a BWR5. The GE analysis includes breaks in both recirculation and non-recirculation piping. Figure 6.3-9 shows the original plant break spectrum analysis for initial core fuel. For reload fuel, the break spectrum is determined and documented in Reference 6.3-5 (MELLLA) and 6.3-16 (GNF2), consistent with the original plant break spectrum analysis in References 6.3-1 and 6.3-7.

Two break types (geometry) are considered for the recirculation pipe break; the DEG break and the split break. For the DEG break, the pipe is completely severed, resulting in two independent flow paths to the containment. The DEG break is modeled by setting the break area equal to the full pipe cross-sectional area and varying the discharge coefficient. The split break is a longitudinal opening or hole that results in a single break flow path to the containment. Appendix K of 10 CFR 50 defines the cross-sectional area of the piping as the maximum split break area required for analysis.

6.3.3.7.1 Break Spectrum Calculation, GE Hitachi Nuclear Energy

A sufficient number of breaks for recirculation suction line are analyzed with the potentially limiting single failures using nominal assumptions. This ensures that the limiting combination of break size, location, axial power shape and single failure has been identified. The limiting large break for nominal assumptions is the 100% DBA with mid-peaked axial power shape and HPCS DG failure. The overall limiting LOCA is the small recirculation suction line break of 0.07 ft^2 for nominal assumptions with top peaked axial power shape and HPCS DG failure.

Using the Appendix K input assumptions, analyses of large breaks are also performed with the limiting single failure. The 100%, 80%, and 60% DBA cases also satisfy the Appendix K requirement for using the Moody Slip Flow Model with three discharge coefficients of 1.0, 0.8, and 0.6, respectively. The limiting Appendix K case for large break is the 100% DBA with top-peaked axial power shape and HPCS DG failure. The overall limiting LOCA is the small recirculation suction line break of 0.07 ft^2 for Appendix K assumptions with top peaked axial power shape and HPCS DG failure.

The analysis also considers the non-recirculation line breaks (CS line, LPCI line and etc.) as well as alternate operating modes (MELLLA, ICF, FFWTR/FWHOOS and SLO) References 6.3-5 and 6.3-16 documents all the analysis results.

6.3.3.7.2 Deleted.

6.3.3.8 Loss-of-Coolant Accident Analysis Conclusions

The ECCS will perform the required design functions and comply with 10 CFR 50.46 acceptance criteria.

The limiting large break for two loop operation is the recirculation suction line break of DBA with HPCS diesel generator failure at 102.4% rated power (3629 MWt)/100% rated flow conditions with a mid peaked axial power shape (References 6.3-5 and 6.3-16).

The overall limiting LOCA is the small recirculation suction line break of 0.07 ft^2 for Appendix K and nominal assumptions, respectively, with high pressure core spray diesel generator failure at 102.4% rated power (3629 MWt)/100% rated flow conditions and a top peaked axial power shape (References 6.3-5 and 6.3-16).

The SLO case is performed at the maximum attainable power and flow on the ELLLA rod line. The case conservatively assumes the simultaneous dryout of all axial fuel nodes almost immediately following the initiation of the event. A SLO multiplier of 1.0 on MAPLHGR is applied (References 6.3-5 and 6.3-16). Extended operation in the MELLLA domain is not analyzed for SLO.

6.3.4 TESTS AND INSPECTIONS

6.3.4.1 Emergency Core Cooling System Performance Tests

The systems of the ECCS were tested for their operational ECCS function during the preoperational and/or startup test program. Each component was tested for power source, range, direction of rotation, set point, limit switch setting, torque switch setting, etc. Each pump was tested for flow capacity for comparison with vendor data (this test was also used to verify flow measuring capability.) The flow tests involved the same suction and discharge source; i.e., suppression pool or condensate storage tank.

All logic elements were tested individually and then as a system to verify complete system response to emergency signals including the ability of valves to revert to the ECCS alignment from other positions.

During preoperational tests each system was tested for response time and flow capacity while taking suction from its normal source and delivering flow into the reactor vessel.
See Section 14.2 for a thorough discussion of preoperational testing for these systems.
Pump and valve periodic tests are discussed in Section 3.9.6.

6.3.4.2 Reliability Tests and Inspections

Active components of the HPCS, ADS, LPCS, and LPCI systems are designed so that they may be tested during normal plant operation. Full flow test capability is provided by a testing path back to the suction source. The full flow test is used to verify the capacity of each ECCS pump loop while the plant remains undisturbed in the power generation mode. In addition, each individual valve may be tested in accordance with Inservice Testing Program requirements. Input jacks are provided such that each ECCS loop can be tested for response time.

Testing of the initiating instrumentation and controls portion of the ECCS is discussed in Section 7.3.1. The emergency power system, which supplies electrical power to the ECCS in the event that offsite power is unavailable, is tested as described in Section 8.3.1. The frequency of testing is prescribed by the Technical Specifications. Visual inspections of ECCS components located outside the drywell can be made at any time during power operation. Components inside the drywell can be visually inspected only during periods of access to the drywell. When the reactor vessel is open, the spargers and other internals can be inspected.

6.3.4.2.1 High-Pressure Core Spray Testing

The HPCS can be tested at full flow with suppression pool water at any time during plant operation, except when the reactor vessel water level is low. If an initiation signal occurs while the HPCS is being tested, the system automatically returns to the operating mode.

A design flow functional test of the HPCS over the operating pressure and flow range is performed by pumping water from the suppression pool and back through the full flow test return line to the suppression pool.

The suction valve from the suppression pool and the discharge valve to the reactor remain closed. These two valves are tested separately to ensure operability.

6.3.4.2.2 Automatic Depressurization System Testing

The ADS valves are fully tested during the time when the reactor is being depressurized prior to or repressurized following a refueling outage. This testing includes simulated automatic actuation of the system throughout its emergency operating sequence, but excludes actual valve actuation. Each individual ADS valve is manually actuated.

During plant operation the ADS system can be checked as discussed in Section 7.3.1.

6.3.4.2.3 Low-Pressure Core Spray Testing

The LPCS pump and valves are tested periodically. With the injection valve closed and the return line open to the suppression pool, full flow pump capability is demonstrated. The injection valve and the check valve are tested in a manner similar to that of the LPCI valves.

6.3.4.2.4 Low-Pressure Coolant Injection Testing

Each LPCI loop can be tested during reactor operation. The test conditions are tabulated in Chapter 5. During plant operation, this test does not inject cold water into the reactor because the injection line check valve is held closed by vessel pressure, which is higher than the pump pressure. The injection line portion is tested with reactor water when the reactor is shut down and when a closed system loop is created. This prevents unnecessary thermal stresses.

To test an LPCI pump at rated flow, the test line valve to the suppression pool is opened and the pump suction valve from the suppression pool is opened (this valve is normally open). For loops A and B, the valve to the suppression chamber spray ring header is also opened. Correct operation is determined by observing the instruments in the control room.

If an initiation signal occurs during the tests, the LPCI system automatically returns to the operating mode. The valves in the test lines are closed automatically to ensure that the LPCI pump discharge is correctly routed to the reactor vessel.

6.3.5 INSTRUMENTATION REQUIREMENTS

Design details including redundancy and logic of the ECCS instrumentation are discussed in Section 7.3.1.

Instrumentation required for automatic and manual initiation of the HPCS, LPCS, LPCI, and ADS is discussed in Section 7.3.1 and is designed to meet the requirements of IEEE 279 and other applicable requirements. The HPCS, LPCS, LPCI, and ADS can be manually initiated from the control room.

The HPCS, LPCS, and LPCI are automatically initiated on low reactor water level or high drywell pressure (see Table 6.3-1 for specific initiation levels for each system). The ADS is automatically actuated by sensed variables for reactor vessel low water level plus indication that at least one RHR or LPCS pump is operating. The HPCS, LPCS, and LPCI automatically return from system flow test modes to the emergency core cooling mode of operation following receipt of an initiation signal. The LPCS and LPCI system injection into the RPV begin when reactor pressure decreases to system discharge shutoff pressure. HPCS injection begins as

soon as the HPCS pump is up to speed and the injection valve is open since the HPCS is capable of injecting water into the RPV over a pressure range from 0 psid* to 1160 psid.*

6.3.6 REFERENCES

6.3-1 GE Nuclear Energy, "Washington Public Power Supply System Nuclear Project 2, SAFER/GESTR-LOCA Loss-of-Coolant Accident Analysis," NEDC-32115P, Class III (Proprietary), DRF A00-05078, Revision 2.

6.3-2 GE Nuclear Energy, "Washington Public Power Supply System Nuclear Project 2, SRV Setpoint Tolerance and Out-of-Service Analysis," GE-NE-187-24-0992, Revision 2.

6.3-3 GE BWROG Committee on ECCS Suction Strainers, "Utility Resolution Guidance for ECCS Suction Strainer Blockage," NEDO-32686, Revision 0.

6.3-4 GE Nuclear Energy, Washington Public Power Supply System Nuclear Project 2, "WNP-2 Power Uprate Transient Analysis Task Report," GE-NE-208-08-0393, DRF A00-05078 and -05371.

6.3-5 GE Hitachi Nuclear Energy Report 0000-0105-1741-R0, "Energy Northwest Columbia Generating Station ARTS/MELLLA Task T0407: ECCS-LOCA Evaluations," October 2009.

6.3-6 GE Hitachi Nuclear Energy Report 002N5109-R0, "Columbia Long Term Cooling," May 26, 2015.

6.3-7 General Electric Company, "General Electric Company Analytical Model for Loss-of-Coolant Analysis in Accordance with 10CFR50 Appendix K," NEDO-20566-A, September 1986.

6.3-8 "The GESTR-LOCA and SAFER Models for the Evaluation of the Loss-of-Coolant Accident. Vol. 1, GESTR-LOCA – A Model for the Prediction of Fuel Rod Thermal Performance," NEDE-23785-1-PA, Revision 1, October 1984.

6.3-9 "The GESTR-LOCA and SAFER Models for the Evaluation of the Loss-of-Coolant Accident. Vol. 2, SAFER – Long Term Inventory Model for BWR Loss-of-Coolant Analysis," NEDE-23785-1-PA, Revision 1, October 1984.

6.3-10 "The GESTR-LOCA and SAFER Models for the Evaluation of the Loss-of-Coolant Accident. Vol. 3, SAFER/GESTR– Application Methodology," NEDE-23785-1-PA, Revision 1, October 1984.

* psid - differential pressure between RPV and pump suction source.

6.3-11 "The GESTR-LOCA and SAFER Models for the Evaluation of the Loss-of-Coolant Accident. Vol. 3, Supplement 1, Additional Information for Upper Bound PCT Calculation," NEDE-23785P-A, Revision 1, March 2002.

6.3-12 "TASC-03A A Computer Program for Transient Analysis of a Single Channel," NEDC-32084P-A, Revision 2, July 2002.

6.3-13 "Compilation of Improvements to GENE's SAFER ECCS-LOCA Evaluation Model," NEDC-32950P, Revision 1, July 2007.

6.3-14 "The PRIME Model for Analysis of Fuel Rod Thermal-Mechanical Performance," Part 1 – Technical Bases – NEDC-33256P-A, Part 2 – Qualification – NEDC-33257P-A, and Part 3 Application Methodology – NEDC-33258P-A, Revision 1, September 2010.

6.3-15 Deleted

6.3-16 "Columbia Generating Station GNF2 ECCS-LOCA Evaluation," 001N0373-R2, February 2015.

6.3-17 GE-Hitachi Nuclear Energy, "Safety Analysis Report for Columbia Generating Station Thermal Power Optimization," NEDC-33853P, March 2016.

Table 6.3-1

Emergency Core Cooling System Design Parameters

Parameter	Value	
Initiation Signals		
High drywell pressure	2.0 psig (not credited)	
L2 (Low low water level)	9.26 ft above top of active fuel	
L1 (Low low low water level)	2.68 ft. above top of active fuel	
LPCS pump running	150 psig pump discharge pressure	
LPCI pump running	100 psig pump discharge pressure	
High Pressure Core Spray System		
Minimum rated flow at vessel pressure (differential pressure between vessel head and suction source)	psid	gpm
	200	6350
	1130	1550
	1160	516
Vessel pressure that injection valve may open	1175 psia	
Maximum flow (runout)	7341 gpm	
Low Pressure Core Spray System		
Minimum rated flow at vessel pressure (differential pressure between vessel head and suppression pool air volume)	psid	gpm
	128	6350
Vessel pressure that injection valve may open	485 psia	
Maximum flow (runout)	8100 gpm	
Low Pressure Coolant Injection Mode RHR System		
Minimum rated flow at vessel pressure (differential pressure between vessel head and suppression pool air volume)	psid	gpm
	26	7450
Vessel pressure that injection valve may open	485 psia	
Maximum flow (runout) three pumps	Pump A: 8100 gpm Pump B: 8100 gpm Pump C: 8000 gpm	
Automatic Depressurization System		
Number of safety relief valves with ADS function	7 valves	
Time delay: - Initiation signal to valves open	105 seconds[a]	

[a] Either of both ADS trip systems may be manually inhibited, if necessary, to eliminate resetting the timer.

Table 6.3-2a

Plant Operational Parameters

Parameter	Nominal Assumption	Appendix K Assumption
Rated Case Core Thermal Power (MW)	3629	3702
Rated Case Core Flow (Mlbm/hr)	108.5	108.5
MELLLA Case Core Thermal Power (MW)	3629	3702
MELLLA Case Core Flow (Mlbm/hr)	93.04	93.04
ELLLA SLO Case Core Thermal Power (MW)	2684.2	2737.9
ELLLA SLO Case Core Flow (Mlbm/hr)	61.845	61.845
Vessel Steam Dome Pressure (psia)	1055	1055
Feedwater Temperature (°F)	425.7	428
PLHGR Uncertainty (%)	N/A	2
Number of ADS Valves Assumed Available	5	5
Feedwater Temperature Reduction (°F)	65[(1)]	65[(1)]
ICF Core Flow (Mlbm/hr)	115	115

[(1)] Feedwater temperature: Nominal - 65°F or 355°F, whichever is lower.

Table 6.3-2b

Fuel Parameters

Parameter		GNF2
PLHGR (kW/ft)	– LOCA Analysis Limit	14.40
	– Appendix K	14.40 × 1.02
	– Nominal	13.75
MAPLHGR (kW/ft)	– LOCA Analysis Limit	13.78
	– Appendix K	13.78 ×1.02
	– Nominal	13.15
Peak Pellet Exposure (MWd/MTU)		14600
Initial Operating MCPR	– LOCA Analysis Limit	1.25
	– Appendix K	1.25 ÷ 1.02
	– Nominal	1.25 + 0.02
Fueled Rods per Assembly		92

Table 6.3-2c

ECCS Parameters

Low Pressure Coolant Injection (LPCI) System		
Variable	Units	Analysis Value
a. Maximum vessel pressure at which pumps can inject flow	psid (vessel to drywell)	222
b. Minimum rated flow (into shroud)		
• Vessel pressure at which below listed flow rates are quoted	psid (vessel to drywell)	20
• One (1) LPCI pump injecting inside shroud	gpm	6,713
• Two (2) LPCI pumps injecting inside shroud	gpm	13,426
• Three (3) LPCI pumps injecting inside shroud	gpm	20,139
c. Run-out flow at 0 psid (vessel to drywell)		
• One (1) LPCI pump injecting inside shroud	gpm	7,034
• Two (2) LPCI pumps injecting inside shroud	gpm	14,068
• Three (3) LPCI pumps injecting inside shroud	gpm	21,102
d. Initiating signals		
• Low low low water level (Level 1)	inches above vessel “zero”	378.5
e. Vessel pressure at which injection valve may open	psig	336
f. Maximum delay time from pump start until pump is at rated speed	sec	26
g. Maximum injection valve stroke time-opening	sec	26
h. Delay time to process initiation signal	sec	5

Table 6.3-2c

ECCS Parameters
(Continued)

Low Pressure Core Spray (LPCS) System		
Variable	Units	Analysis Value
a. Maximum vessel pressure at which pumps can inject flow	psid (vessel to drywell)	285
b. Minimum rated flow at vessel-to-drywell pressure (into shroud)	gpm psid	5625 122
c. Run-out flow at 0 psid (vessel to drywell)	gpm	7030
d. Initiating signals • Low low low water level (Level 1)	inches above vessel "zero"	378.5
e. Vessel pressure at which injection valve may open	psig	336
f. Maximum delay time from pump start until pump is at rated speed	sec	7
g. Maximum injection valve stroke time-opening	sec	22
h. Delay time to process initiation signal	sec	5

Table 6.3-2c

ECCS Parameters
(Continued)

High Pressure Core Spray (HPCS) System		
Variable	Units	Analysis Value
a. Vessel Pressure at which flow may commence	psid (vessel to source)	1160
b. Minimum rated flow and vessel pressure	gpm/psid (vessel to source of suction)	413/1160 920/1130 5000/200 6250/0
c. Run-out flow at 0 psid (vessel to source of suction)	gpm	6250
d. Initiating signals		
• Low low water level (Level 2)	inches above vessel "zero"	437.5
e. Maximum delay time from pump start until pump is at rated speed	sec	7
f. Maximum injection valve stroke time-opening	sec	17
g. Delay time to process initiation signal	sec	5

Table 6.3-2c

ECCS Parameters
(Continued)

Automatic Depressurization System (ADS)		
Variable	Units	Analysis Value
a. Total number of valves with ADS function available		7
b. Number of ADS valves assumed in the analysis		5
c. Pressure at which below listed capacity is quoted	psig	1205
d. Minimum flow capacity at pressure given in c with all available ADS valves open	lbm/hr	9.0×10^5
e. Initiating Signals		
• Low low low water level (Level 1) and	inches above vessel "zero"	378.5
• ADS Timer Delay from initiating signal completed to the time valves are open	sec	120
f. Delay time to process initiation signal	sec	5

Table 6.3-3

Single Failure Considered in ECCS Performance Evaluation

Break Location	Assumed Failure[1]	Systems Remaining[2] [3]
Recirculation Suction Line	LPCI Emergency D/G	ADS, HPCS, LPCS, 1 LPCI
Recirculation Suction Line	LPCS Emergency D/G	ADS, HPCS, 2 LPCI
Recirculation Suction Line	HPCS Emergency D/G	ADS, LPCS, 3 LPCI
Core Spray Line	LPCS Emergency D/G	ADS, 2 LPCI
Steamline Inside Containment	LPCI Emergency D/G	ADS, HPCS, LPCS, 1 LPCI
Steamline Outside Containment	HPCS Emergency D/G	ADS, LPCS, 3 LPCI
Feedwater Line	HPCS Emergency D/G	ADS, LPCS, 3 LPCI
LPCI Line	HPCS Emergency D/G	ADS, LPCS, 2 LPCI

[1] Other postulated failures are not specifically considered because they all result in at least as much ECCS capacity as one of the above assumed failures.
[2] Systems remaining, as identified in this table, are applicable to all non-ECCS line breaks. For a LOCA from an ECCS line break, the systems remaining are those listed, less the ECCS system in which the break is assumed.
[3] The analyses are performed with two non-function ADS valves in addition to the single failure.

Table 6.3-4a

Event Scenario for 100% DBA Recirculation Suction Line Break
HPCS DG Failure (Appendix K)

Event	GNF2 Time (sec)
Break Occurs	0.00
Scram Initiated and Occurs	0.01
Feedwater Flow Reaches Zero	4.00
Level 1 Trip	4.88
Jet Pump Suction Uncovers	5.94
First Peak PCT Occurs	6.90
Main Steamline Flow Stops	6.66
Suction Line Uncovers	8.76
Lower Plenum Flashes	9.61
LPCS/LPCI IV Pressure Permissive Reached	30.53
LPCS Injection Occurs	57.53
LPCI Injection Occurs	61.53
Second Peak PCT Occurs	142.50

Table 6.3-4b

Event Scenario for 0.07 ft^2 Recirculation Suction Line Break
HPCS DG Failure (Appendix K)

Event	GNF2 Time (sec)
Break Occurs	0.00
Scram Initiated and Occurs	0.01
Feedwater Flow Reaches Zero	4.00
Level 1 Trip	107.23
SRVs Open	170.02
Jet Pump Suction Uncovers	212.86
ADS Valves Open	232.23
Main Steamline Flow Stops	240.12
Lower Plenum Flashes	242.98
Suction Line Uncovers	366.89
LPCS/LPCI IV Pressure Permissive Reached	384.79
LPCS Injection Occurs	411.79
LPCI Injection Occurs	415.79
Peak PCT Occurs	445.67

Table 6.3-5

ECCS Performance Analysis Results

Parameter	GNF2 Value	
	Two loop operation	Single loop operation
Thermal power (including .34% power uncertainty)	104.5% rated power (3702 MWt)	77.3% rated power *(2737.9 MWt)
Core flow	85.8% rated flow (93.04 Mlb/hr)	57% rated flow (61.845 Mlb/hr)
Limiting break	0.07 ft^2 Recirculation suction line, HPCS DG failure	100% DBA Recirculation suction line, HPCS DG failure
Peak cladding temperature (Appendix K)	1637°F	1316°F
Licensing basis peak cladding temperature	1700°F	
Maximum cladding oxidation	≤ 1%	
Total core hydrogen generation	≤ 0.1%	

*Single Loop Operation is based upon the nominal power rating (2684.2 MWt) which is 2% less than rated power. 2684.2 MWt is 75.7% of rated power.

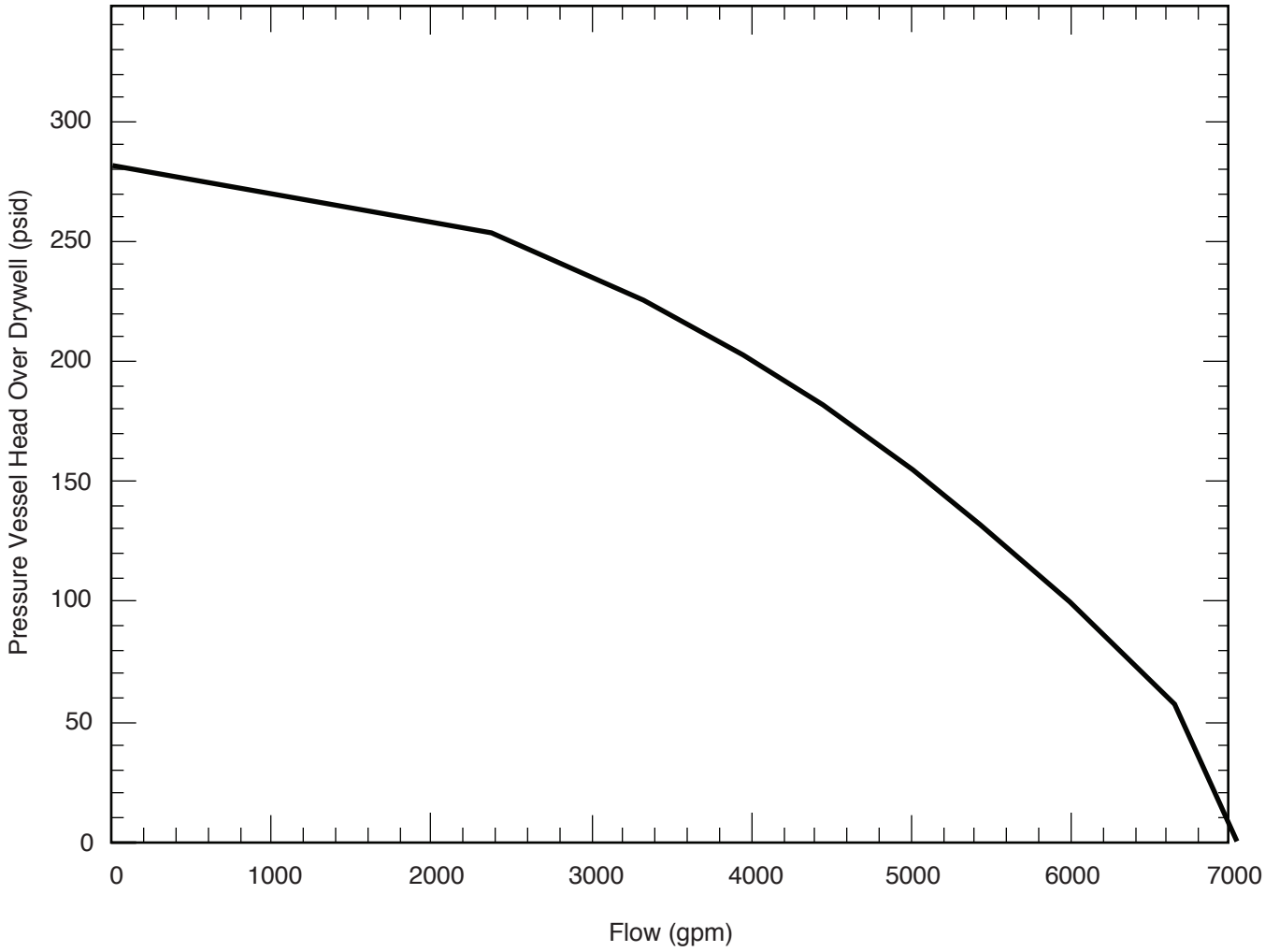

Columbia Generating Station **Final Safety Analysis Report**	**Head Versus Low-Pressure Core Spray Flow used in LOCA Analysis**		
	Draw. No. **960222.13**	Rev.	Figure **6.3-1**

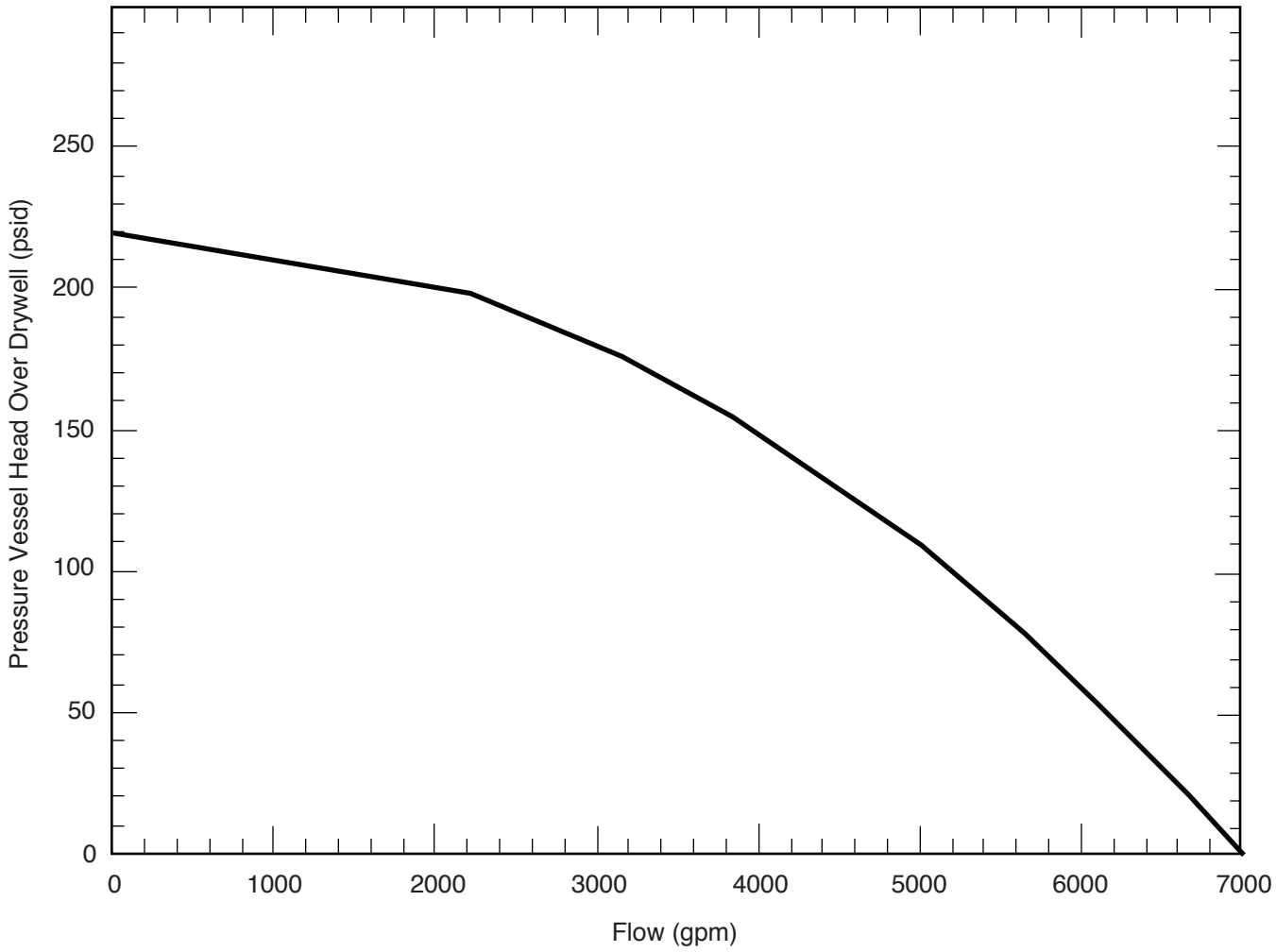

Columbia Generating Station Final Safety Analysis Report	**Head Versus Low-Pressure Coolant Injection Flow used in LOCA Analysis**		
	Draw. No. **960222.14**	Rev.	Figure **6.3-2**

EIS IDENT : HPCS SYS

GENERAL ELECTRIC 731E932AD

PROCESS DIAGRAM
HIGH PRESSURE CORE SPRAY
FIRST MADE FOR NUCLEAR BOILER SYS. 238X173AD

MPL E22-1020

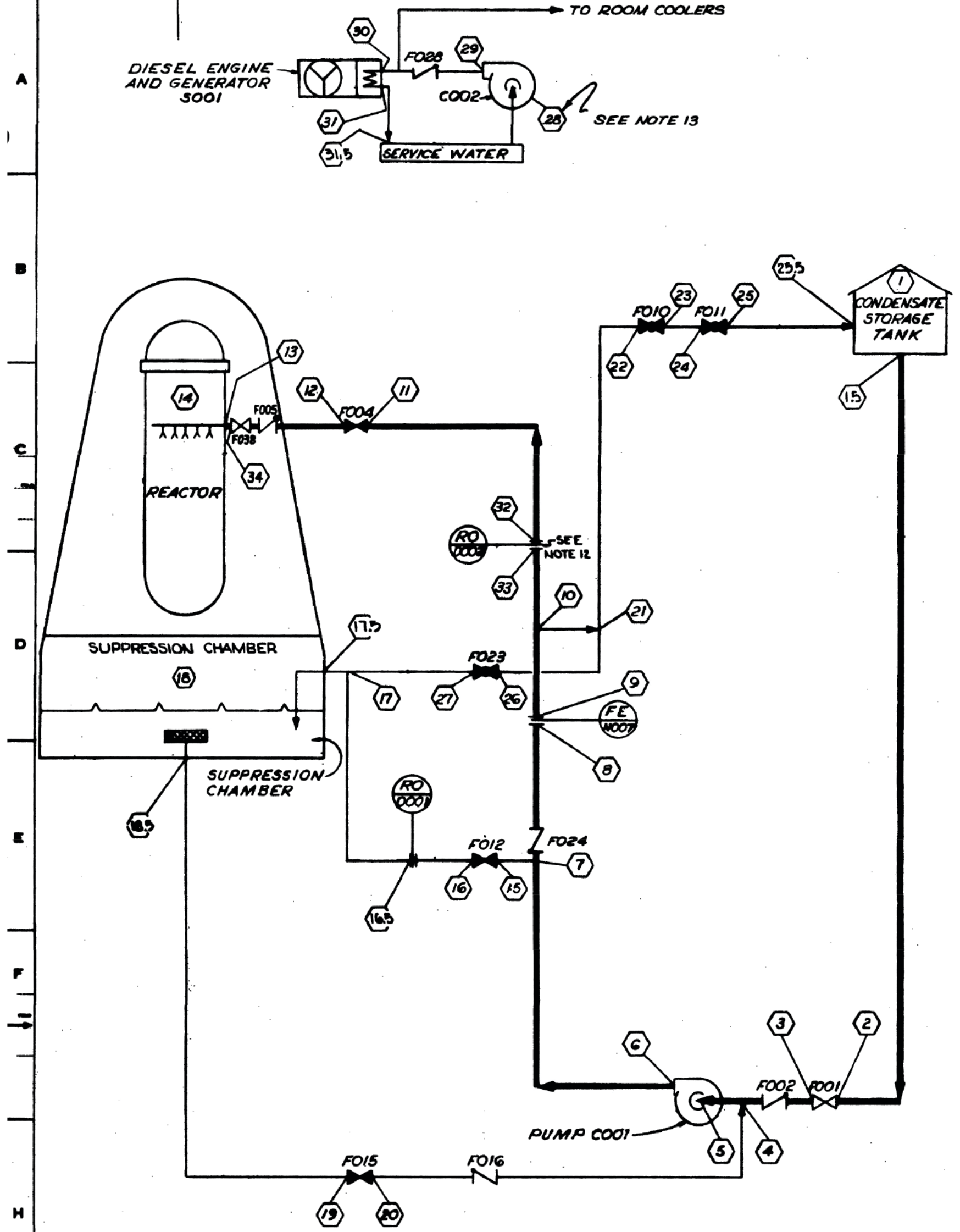

PRIMARY MODES

(SEE NOTE 21)
MODE A ACCIDENT OR RCIC BACKUP, REACTOR AT HIGH PRESSURE, SUCTION FROM CONDENSATE STORAGE

POSITION ⬡	1	2	3	4	5	6	7	8	9	10	11	12	13	14
FLOW GPM	N/A	1550	←									→	1550	N/A
PRESS. PSIA	14.7													1145
TEMP °F	AMB	120/40	←									→	120/40	AMB.
MAX. PRESS. DROP FEET					←2787→									

(SEE NOTE 21)
MODE B ACCIDENT, REACTOR AT HIGH PRESSURE, SUCTION FROM SUPPRESSION POOL

POSITION ⬡	4	5	6	7	8	9	10	11	12	13	14	19	20	18
FLOW GPM	1550	←							→	1550	N/A	1550	1550	N/A
PRESS. PSIA											1145			14.7
TEMP. °F	120/40	←							→	120/40	AMB	120/40	120/40	AMB
MAX. PRESS. DROP FEET		←2787→												

MODE C ACCIDENT, SYSTEM INJECTION AT RATED CORE SPRAY, SUCTION FROM SUPPRESSION POOL

POSITION ⬡	4	5	6	7	8	9	10	11	12	13	14	19	20	18	28	29	30	31
FLOW GPM	6350	←							→	6350	N/A	6350	6350	N/A	←1200→		←1000→	
PRESS PSIA											218			14.7	SEE NOTE 13			
TEMP °F	170/40	←							→	170/40	AMB	170/40	170/40	AMB	←95→			
MAX. PRESS. DROP FEET		←865→			←21→			←2.2→		←198→		←.30→			←123→		←14→	

MODE D ACCIDENT, SYSTEM INJECTION AT RATED CORE FLOOD, SUCTION FROM SUPPRESSION POOL

POSITION ⬡	4	5	6	7	8	9	10	11	12	13	14	19	20	18
FLOW GPM	6856	←							→	6856	N/A	6856	6856	N/A
PRESS. PSIA											41		-	14.7
TEMP. °F	170/40	←							→	170/40	AMB	170/40	170/40	AMB
MAX. PRESS. DROP FEET		←594→			←24→			←2.5→		←231→				

MODE E ACCIDENT, SYSTEM INJECTION AT RATED CORE FLOOD, SUCTION FROM CONDENSATE STORAGE

POSITION ⬡	1	2	3	4	5	6	7	8	9	10	11	12	13	14
FLOW GPM SEE NOTE 5 & 8	N/A	6856	←									→	6856	N/A
PRESS PSIA	14.7				SEE NOTE 8									80
TEMP. °F	AMB	120/40	←									→	120/40	AMB
MAX. PRESS. DROP FEET		←.79→			←594 SEE NOTE 6→			←24→			←2.5→		←231→	

MODE F ACCIDENT, SYSTEM OPERATING AT RUNOUT, SUCTION FROM SUPPRESSION POOL

POSITION ⬡	4	5	6	7	8	9	10	11	12	13	14	19	20	18
FLOW GPM SEE NOTE 9.	7175/7300	←							→	7175/7300	N/A	7175/7300	7175/7300	N/A
PRESS. PSIA		SEE NOTE 7									14.7			14.7
TEMP °F	212/40	←							→	212/40	AMB	212/40	212/40	AMB
MAX. PRESS. DROP FEET		←437→										←.4→		

SEE NOTE 27

MODE G SYSTEM TEST, SUCTION FROM SUPPRESSION POOL

POSITION ⬡	4	5	6	7	8	9	10	21	26	27	17	19	20	18
FLOW GPM SEE NOTE 9	7175/7300	←										→	7175/7300	N/A
PRESS. PSIA		X	X	X	X	X	X	X	X	X	X	X	X	14.7
TEMP. °F	120/40	←										→	120/40	AMB
MAX. PRESS. DROP FEET		←437→							←39→ SEE NOTE 10					

SEE NOTE 27

TABLE I
VALVE POSITION TABLE

VALVE	F001	F004	F010	F011	F012	F015	F023	F038
MODE A	O	O	C	C	C	C	C	O
MODE B	C	O	C	C	C	O	C	O
MODE C	C	O	C	C	C	O	C	O
MODE D	C	O	C	C	C	O	C	O
MODE E	O	O	C	C	C	C	C	O
MODE F	C	O	C	C	C	O	C	O
MODE G	C	C	C	C	C	O	O	O
MODE H	O	C	O	O	C	C	C	O
MODE J	O	C	C	C	O	C	C	O
MODE S	O	C	C	C	C	C	C	O
MODE CC	C	O	C	C	O	O	C	O

O VALVE OPEN
C VALVE CLOSE

MODE J PUMP OPERATING ON BYPASS, SUCTION FROM CONDENSATE STORAGE

POSITION ⬡	1	2	3	4	5	6	7	15	16	17	18
FLOW GPM	N/A	1150	←						→	1150	N/A
PRESS. PSIA	14.7	X	X	X	X	X	X	X	X	X	14.7
TEMP. °F	AMB	120/40	←						→	120/40	AMB
MAX. PRESS. DROP FEET					←3000→			←65→			

NOTES:

1. ALL EMPTY PRESSURE DATA BLANKS CAN BE FILLED IN BY OTHERS (BASED ON ACTUAL ARRAGNEMENT) OR EQUIV. HYDRAULIC DATA SUBMITTED TO APED FOR REVIEW. ⊠ INDICATES THE DATA IS NOT SIGNIFICANT.
2. MAX/MIN INDICATES MAXIMUM & MINIMUM VALUE OF PARAMETER FOR THE MODE SPECIFIED.
3. ELEVATIONS ARE NOT INCLUDED IN ΔP VALUES GIVEN. ELEVATIONS SHALL BE INCLUDED WHEN DETERMINING FINAL VALUES FOR THE EMPTY PRESSURE DATA BLANKS.
4. THE PUMP MAXIMUM SHUTOFF HEAD WILL NOT EXCEED 3450 FT.
5. IN MODE E WITH A PUMP TDH OF 865 FT AND A VESSEL PRESSURE OF 215 PSIA THE FLOW MUST BE EQUAL TO OR GREATER THAN 6350 GPM.
6. THE PUMP TDH GIVEN FOR MODE E IS BASED ON A MAXIMUM CONTAINMENT PRESSURE OF 45 PSIG. BWRSD MUST BE ADVISED IF THE CONTAINMENT DESIGN IS BASED ON A HIGHER PRESSURE AND THE IMPACT ON THE HIGH PRESSURE CORE SPRAY SYSTEM EVALUATED.
7. IN MODE F THE NET POSITIVE SUCTION HEAD (NPSH) AVAILABLE AT THE CENTER LINE OF THE PUMP SUCTION NOZZLE MUST EQUAL OR EXCEED 32.2 FEET.
8. IN MODE E AND AT A FLOW RATE OF 7349 GPM OR LESS, THE AVAILABLE NPSH MUST EQUAL OR EXCEED THE VALUE SPECIFIED IN NOTE 7 ABOVE
9. THE FLOW SPECIFIED FOR MODES F AND G IS APPROXIMATE AND MUST BE DETERMINED BASED ON FINAL SYSTEM DESIGN. THE FLOW GIVEN FOR THESE MODES IS THE MAXIMUM ALLOWABLE.
10. THE ΔP GIVEN FOR THE VALVES IN MODES G AND H IS THE MINIMUM POSSIBLE AND MAY BE INCREASED BY OTHERS (THROTTLING) TO ACCOMMODATE PIPING ARRANGEMENT.
11.
12. ORIFICE RO-2 PROVIDES NO RESTRICTION, AS ITS BORE COINCIDES WITH THE INNER DIAMETER OF THE 16" DISCHARGE HEADER. THE SYSTEM RESISTANCE-WITHOUT RESTRICTOR-IS SUFFICIENT TO ENSURE PUMP RUN OUT WILL NOT EXCEED SPECIFIED LIMITS.
13. THE MIMIMUM AVAILABLE NPSH TO THE DIESEL SERVICE WATER PUMP MUST BE 22 FT OR GREATER.
14. VALUES WILL BE ADDED FOR INDIVIDUAL PROJECT BASED ON ACTUAL COOLING WATER TEMPERATURE.
15.
16. ΔP VALUES FOR EQUIPMENT WITHIN GE-APED SCOPE ARE AS NOTED.
17. TABLE I INDICATES VALVE POSITION DURING VARIOUS OPERATING MODES.
18. PIPING SYSTEM DESIGN PRESSURE AND TEMPERATURE AND THE ESTIMATED LINE SIZES ARE FOR INFORMATION ONLY. ACTUAL DESIGN TEMPERATURE AND PRESSURE AND LINE SIZES AS DETERMINED BY OTHERS SHALL MEET THE PROCESS DIAGRAM HYDRAULIC REQUIREMENTS
19.
20. IN MODE E AND WITH A VESSEL PRESSURE OF 14.7 PSIA. THE FLOW SHALL NOT EXCEED 7175/7300 GPM (SEE NOTE 27).
21. FOR MODES A & B, ONE THIRD OF TABULATED FLOW SHALL BE DELIVERED TO THE VESSEL WITH REACTOR VESSEL PRESSURE AT 1175 PSIA AND THE LOW FLOW BYPASS VALVE (E22-F012) OPEN.
22. THE FLOW SPECIFIED FOR MODE CC MUST BE EQUALED OR EXCEEDED WITH THE SUCTION FROM THE CONDENSATE STORAGE SYSTEM AND WITH THE REACTOR PRESSURE EQUAL TO 1225 PSIA.
23. CAUTION: TO AVOID PUMP DAMAGE/FAILURE, THE MAXIMUM RUNOUT FLOW FOR ANY PUMP OPERATING MODE (e.g. PREOPERATION TEST, PRELIMINARY PUMP CHECK, START UP AND ALL MODES ON THE PROCESS DIAGRAM) SHALL NOT EXCEED 7175/7300 GPM (SEE NOTE 27) & THE MINIMUM FLOW SHALL NOT BE BELOW 1150 GPM.

(NOTES CONT'D. TO ZONE M/1)

SUPPLEMENTAL DOCUMENTS UNDER THE FOLLOWING IDENTITIES ARE TO BE USED IN CONJUNCTION WITH THIS DRAWING.

	REFERENCE DESIGNATOR
1. HIGH PRESSURE CORE SPRAY P&ID	E22-1010
2. NUCLEAR BOILER SYSTEM PROC. DIA	B22-1020
3. HIGH PRESSURE CORE SPRAY DESIGN SPEC	E22-4010

MISCELLANEOUS INFORMATION
(SEE NOTE 18)

LOCATION	1.5-2	2-4	18.5-4-5	6-8-11	34	13	7-16.5	16.5-17	10-27	27-17.5	21-25	25-25.5	29-30	30-31	31-31.5
DESIGN TEMP (°F)	140	212	212	212	✱	SEE REF. 2	212		212		212	140	100	DIESEL HEAT EXCHANGER	130
DESIGN PRESS (PSIG)	100		100	1575	✱	SEE REF. 2	1575	100	1575	100	1575	100	100		100
ESTIMATED LINE SIZE (IN.)	14		18	16		12	4		12		10		5		5
	CONDENSATE STG SUCTION LINE		SUPPRESSION POOL SUCTION LINE	MAIN HPCS LINE TO REACTOR			BY-PASS LINE		SUPPRESSION POOL TEST LINE		CONDENSATE STORAGE TEST RETURN LINE		DIESEL COOLING WATER LINE		

✱ DUAL DESIGN CONDITIONS
1250 PSIG @ 575°F OR
1575 PSIG @ 140°F

NOTES (CONT'D FROM ZONE J/11)

24. ~~ONLY MODE CC WAS UPDATED FOR RPU. THIS WAS CONSIDERED THE MOST AFFECTED AND LIMITING MODE FOR RPU.~~
25. MAX. PRESS DROP FEET VALUES ARE APPROXIMATE. REFER TO DESIGN CALCULATIONS FOR ACTUAL VALUES.
26. FOR MODES D AND E, THE FLOWS INDICATED ARE APPROXIMATE. REFER TO DESIGN CALCULATIONS FOR ACTUAL VALUES.
27. 7175 GPM WITH MODEL 12X20KD-8 HPCS-P-1 PUMP INSTALLED. 7300 GPM WITH MODEL 10154123 HPCS-P-1 PUMP INSTALLED. THE MAXIMUM BOUNDING FLOW PER ANALYSIS IS 7349 GPM.
28. HPCS MODE H, HPCS-V-10 AND HPCS-V-11 ARE DISABLED AND LOCKED CLOSED PER EC 16302.

GENERAL ELECTRIC 731E932AD REV. 2
UNLESS OTHERWISE SPECIFIED USE THE FOLLOWING –
APPLIED PRACTICES | SURFACES ✓ | TOLERANCES ON FINISHED DIMENSIONS: FRACTIONS ± | DECIMALS ± | ANGLES ±
TITLE PROCESS DIAGRAM
HIGH PRESSURE CORE SPRAY
FIRST MADE FOR NUCLEAR BOILER SYS. 238X173 AD

(SEE NOTE 28)
MODE H SYSTEM TEST, SUCTION FROM CONDENSATE STORAGE

POSITION ○	1	2	3	4	5	6	7	8	9	10	21	22	23	24	25
FLOW GPM	N/A	6856	←												6856
PRESS PSIA	14.7	X	X	X	X	X	X	X	X	X	X	X	X	X	X
TEMP °F	AMB	120/40	←												120/40
MAX PRESS DROP FEET					←594→							←95 (SEE NOTE 10)		→95 (SEE NOTE 10)	

MODE S SYSTEM ON STANDBY DUTY

POSITION ○	1	2	3	4	5	6	7	8	9	10	11	12	13	14
FLOW GPM	N/A	0	←										0	N/A
PRESS PSIA	14.7	X	X	X		X	X	X	X	X	X	X	X	SEE REF 2
TEMP °F	AMB	120/40	←							120/40	AMB	←		AMB
MAX PRESS DROP FEET					←0→									

MODE CC ACCIDENT OR RCIC BACK-UP, REACTOR AT HIGH PRESSURE (SEE NOTE 22), SUCTION FROM THE SUPPRESSION POOL

POSITION ○	18.5	19	20	4	5	6	7	8	9	10	11	12	13	14	15	16	17	17.5	18
FLOW GPM	←		1563				→			413				N/A	←	1150			N/A
PRESS PSIA														1225					14.7
TEMP °F	140/40	←											140/40	AMB	140/40	←		140/40	AMB
MAX PRESS DIFFERENCE FT					3025										6.5				

TABLE II
LIMITING LINE LOSS

MODE	FLOW PATH	COMMENT
F	18.5-19-20-4-5	SEE NOTE 7
E	1.5-2-3-4	SEE NOTE 8
CORE	6-7-8-9-10-11-12-13	SEE NOTE 5
J	7-15-16-16.5-17	
H	10-21-22-23-24-25-25.5	
G	21-26-27-17-17.5	

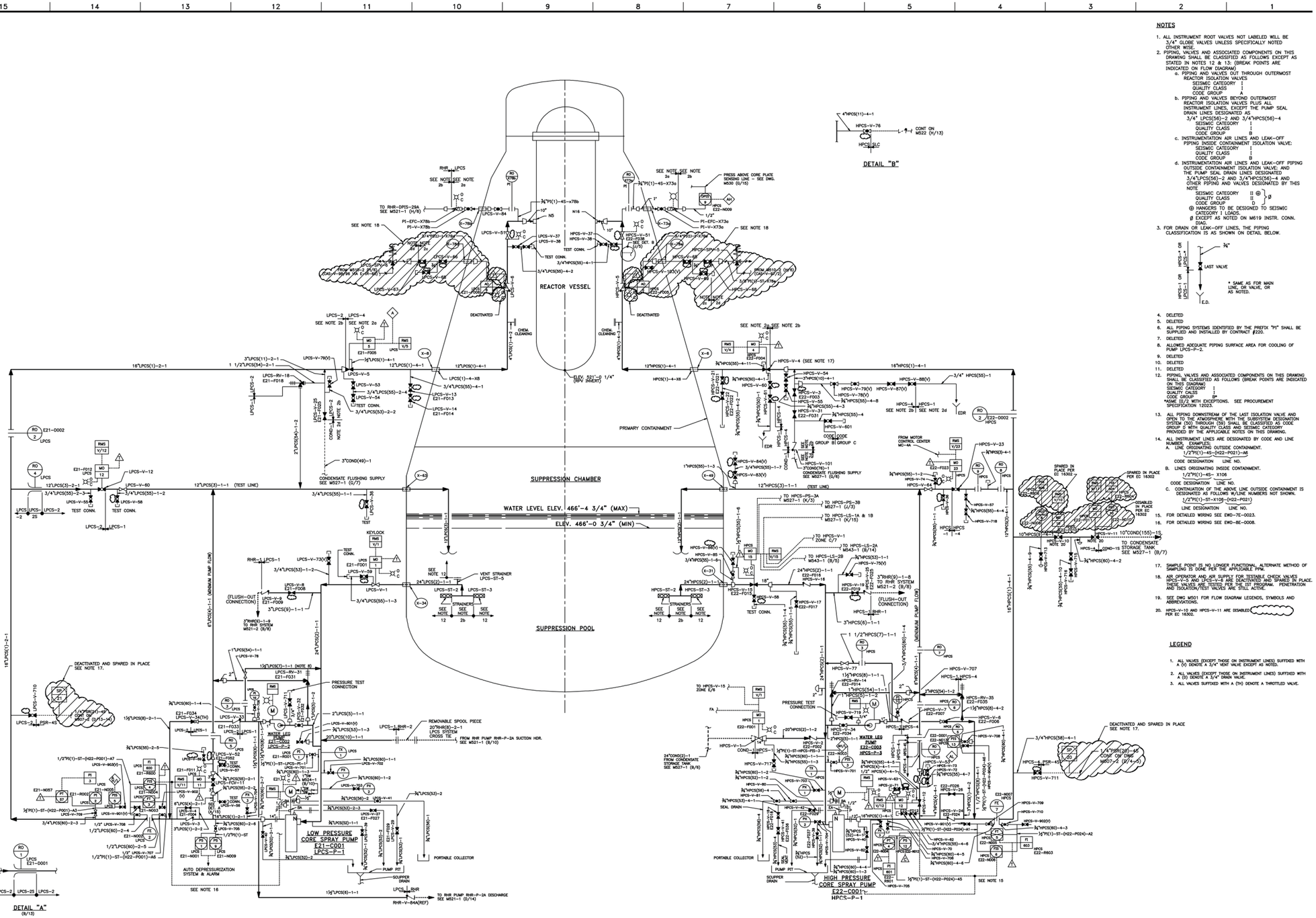
REACTOR VESSEL
ELEV. 521'-0 1/4" (RPV INVERT)
PRIMARY CONTAINMENT
SUPPRESSION CHAMBER
WATER LEVEL ELEV. 466'-4 3/4" (MAX)
ELEV. 466'-0 3/4" (MIN)
SUPPRESSION POOL
LOW PRESSURE CORE SPRAY PUMP E21-C001 LPCS-P-1
HIGH PRESSURE CORE SPRAY PUMP E22-C001 HPCS-P-1
WATER LEG PUMP E22-C003 HPCS-P-3
AUTO DEPRESSURIZATION SYSTEM & ALARM
PORTABLE COLLECTOR
DETAIL "A"
DETAIL "B"
TO CONDENSATE STORAGE TANK SEE M527-1 (B/7)
FROM CONDENSATE STORAGE TANK SEE M527-1 (B/6)
TO RHR PUMP RHR-P-2A DISCHARGE SEE M521-1 (D/14)
FROM RHR PUMP RHR-P-2A SUCTION HDR. SEE M521-1 (B/10)
TO RHR SYSTEM M521-2 (B/8)
TO HPCS-V-1 ZONE C/7
TO HPCS-LS-2A M543-1 (B/14)
TO HPCS-LS-2B M543-1 (B/15)
TO HPCS-LS-1A & 1B M527-1 (K/15)
TO HPCS-PS-3A M527-1 (G/3)
TO HPCS-PS-3B M527-1 (J/3)
CONT ON M522 (H/13)
DEACTIVATED AND SPARED IN PLACE SEE NOTE 17.
SPARED IN PLACE PER EC 16302
DISABLED IN PLACE PER EC 16302
PRESS ABOVE CORE PLATE SENSING LINE - SEE DWG. M530 (G/15)
FROM MOTOR CONTROL CENTER MC-4A
SEE NOTE 15
SEE NOTE 16
SEE NOTE 17
SEE NOTE 18
SEE NOTE 20
SEE NOTE 2a
SEE NOTE 2b
SEE NOTE 2d
SEE NOTE 12
SEE NOTE 2b
SEE NOTE 2a
SEE NOTE 2b
SEE NOTE 2a
SEE NOTE 2b
SEE NOTE 2a

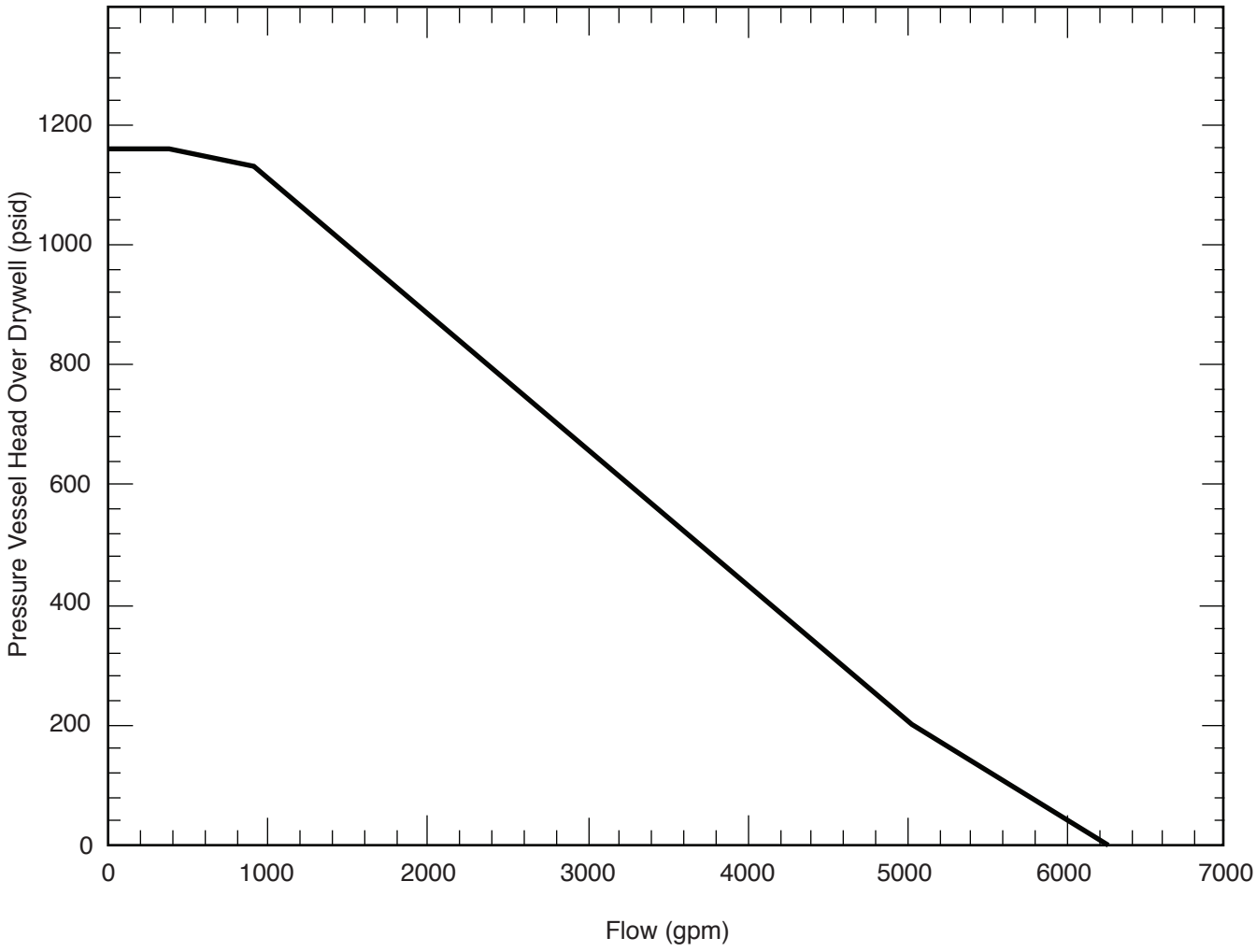

Columbia Generating Station Final Safety Analysis Report	Head Versus High-Pressure Core Spray Flow used in LOCA Analysis		
	Draw. No. 960222.12	Rev.	Figure 6.3-5

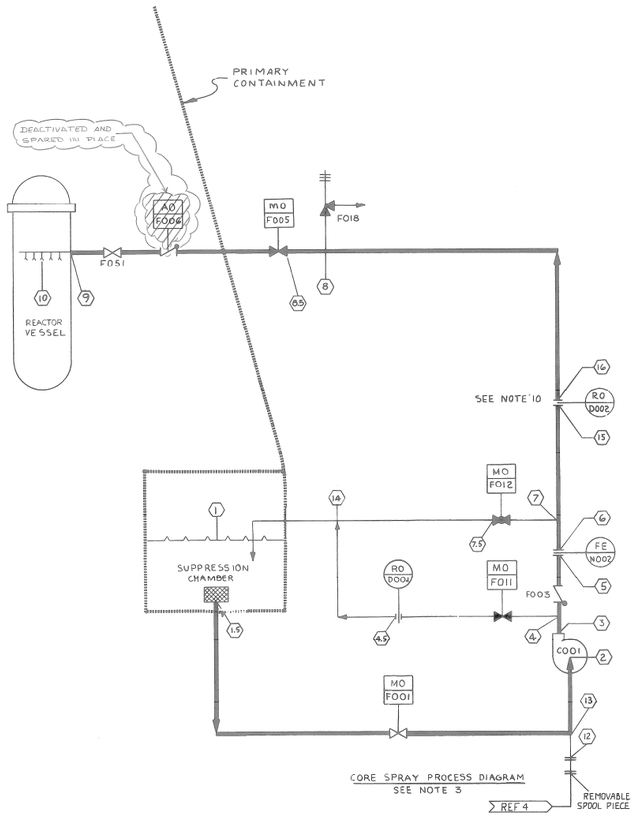

MISCELLANEOUS INFORMATION SEE NOTE 12

LOCATION ⬡	1.5	2	3	4	5	6	7	8	8.5	9	4	4-5	14	7	7.5	14	12	13
DESIGN TEMP (°F)	212	LPCS PUMP	212						488	SEE REF 3	212			212			212	
DESIGN PRESS (PSIG)	100		427							SEE REF 3	427		100	427		100	100	
ESTIMATED LINE SIZES (IN.)	18"		16"							12"	4"			12"			16"	
		MAIN CORE SPRAY LINE TO REACTOR									BYPASS LINE			TEST LINE			RHR SUCTION TEST LINE	

MODE A (NOTE 13) SYSTEM TEST, SUCTION FROM SUPPRESSION POOL

LOCATION ⬡	1	2	3	4	5	6	7	8	9	10		12	13	14
FLOW - GPM	N/A	7800	←				7800	0	0	0		0	0	7800
PRESS - PSIA	14.7													
TEMP - °F	120/40	←					120/40	AMB	←				AMB	120/40
MAX PRESS DROP - FT		• 500 •												

MODE B SYSTEM TEST, SUCTION FROM RESIDUAL HEAT REMOVAL SYSTEM

LOCATION ⬡	1	2	3	4	5	6	7	8	9	10		12	13	14
FLOW - GPM	N/A	8200	←							8200		8200	8200	0
PRESS - PSIA	14.7									14.7				
TEMP - °F	N/A	125/40	←							125/40		125/40	125/40	AMB
MAX PRESS DROP - FT		• 450 •												

MODE C PUMP OPERATING ON BYPASS, SUCTION FROM SUPPRESSION POOL

LOCATION ⬡	1	2	3	4	5	6	7	8	9	10		12	13	14
FLOW - GPM	N/A	635	635	635	0	0	0	0	0	0		0	0	635
PRESS - PSIA	14.7													
TEMP - °F	212/40	←		212/40	AMB	←							AMB	212/40
MAX PRESS DROP - FT		1075/820												

MODE D ACCIDENT, SYSTEM INJECTION AT RATED CORE SPRAY (128 PSID)

LOCATION ⬡	1	2	3	4	5	6	7	8	9	10
FLOW - GPM	N/A	6350	←							6350
PRESS - PSIA	14.7									142.7
TEMP - °F	170	←								170
MAX PRESS DROP - FT		• 674 •			• 17 •					• 198 •

MODE E ACCIDENT, SYSTEM INJECTION AT RATED CORE FLOOD

LOCATION ⬡	1	2	3	4	5	6	7	8	9	10
FLOW - GPM	N/A	7214	←							7214
PRESS - PSIA	14.7									40.7
TEMP - °F	170/40	←								170/40
MAX PRESS DROP - FT		• 515 •								

MODE F ACCIDENT, SYSTEM OPERATING AT RUNOUT

LOCATION ⬡	1	2	3	4	5	6	7	8	9	10
FLOW - GPM	N/A	8100	←							8100
PRESS - PSIA	14.7									14.7
TEMP - °F	212	←								212
MAX PRESS DROP - FT		• 500 •								

MODE S SYSTEM ON STANDBY DUTY

LOCATION ⬡	1	2	3	4	5	6	7	8	9	10	11	12	13	14
FLOW - GPM	N/A	0	←											0
PRESS - PSIA	14.7									REF 3	14.7			
TEMP - °F	120/40	←					120/40	AMB	AMB	AMB	120/40	←		120/40
MAX PRESS DROP - FT		• 0 •												

FCF-239X287AD (E21-1020)

NOTES:

1. ALL EMPTY PRESSURE DATA BLANKS CAN BE FILLED IN BY OTHERS BASED ON ACTUAL ARRANGEMENTS OR EQUIVALENT HYDRAULIC DATA SUBMITTED TO APED FOR REVIEW. ⊠ INDICATES THE DATA IS NOT SIGNIFICANT.
2. ▭ INDICATES MAXIMUM & MINIMUM VALUE OF PARAMETER FOR THE MODE SPECIFIED.
3. ELEVATIONS ARE NOT INCLUDED IN THE ΔP VALUES GIVEN. ELEVATIONS SHALL BE INCLUDED WHEN DETERMINING FINAL VALUES FOR THE EMPTY DATA BLANKS.
4. THE BY-PASS FLOW SPECIFIED IN MODE C IS APPROXIMATED AND WILL BE SPECIFIED BY THE PUMP VENDOR.
5. IN MODE F, THE NET POSITIVE SUCTION HEAD (NPSH) AVAILABLE AT A REFERENCE LOCATION 2 FEET ABOVE THE PUMP MOUNTING FLANGE MUST EQUAL OR EXCEED 30 FT. THE NPSH AVAILABLE AT THE PUMP SUCTION NOZZLE MUST EQUAL THIS VALUE PLUS THE DIFFERENCE IN ELEVATION BETWEEN THE REFERENCE LOCATION AND THE CENTERLINE OF THE PUMP SUCTION NOZZLE.
6. IN MODE B, THE NPSH AVAILABLE MUST EQUAL THE VALUE SPECIFIED IN NOTE 5 PLUS 20 FT.
7. 100 GPM IS INCLUDED IN THE FLOW GIVEN FOR MODE D TO COMPENSATE FOR LEAKAGE IN THE REACTOR INTERNALS. (114 GPM IN MODE E).
8. IN MODE D, 128 IS THE DIFFERENTIAL PRESSURE BETWEEN THE REACTOR VESSEL AND THE SUPPRESSION POOL.
9. THE FLOW SPECIFIED FOR MODE F IS THE MAXIMUM ALLOWABLE.
10. THE ΔP BETWEEN LOCATION 15 AND 16 WILL BE DETERMINED IN PRE-OPERATIONAL TEST. THE ΔP WILL BE ADJUSTED TO MEET THE FLOW REQUIREMENTS OF MODE D, E OR F.
11.
12. PIPING SYSTEM DESIGN PRESSURE AND TEMPERATURE AND THE ESTIMATED LINE SIZES ARE FOR INFORMATION ONLY. ACTUAL DESIGN TEMPERATURE AND PRESSURE AND LINE SIZES AS DETERMINED BY OTHERS SHALL MEET THE PROCESS DIAGRAM HYDRAULIC REQUIREMENT.

REFERENCE DOCUMENTS: MPL ITEM NO.

1. LPCS SYSTEM P&ID - - - - - - - - - - - - - E21-1010
2. LPCS SYS. DESIGN SPEC. - - - - - - - - - - - E21-4010
3. NUCLEAR BOILER SYS. PROC. DIAG. - - - - - - - B22-1020
4. RESIDUAL HEAT REMOVAL SYSTEM P&ID - - - - - - E12-1010

SUPPLEMENTAL DOCUMENTS:

1. PIPING & INSTRUMENT SYMBOLS - - - - - - - - - A42-1010

NOTES: (CONT'D)

13. TO ADDRESS MODE A, THE LPCS RECIRCULATION LINE AND ITS ORIFICE (LPCS-RO-4 IS SIZED FOR THE PUMP RUN-OUT FLOW OF 7800 GPM (REF CVI 215-04-9). DURING ACTUAL TESTING, VALVE LPCS-V-12 IS THROTTLED TO CONFIRM COMPLIANCE WITH THE TDH AND FLOW REQUIREMENTS OF TECH SPEC SR 3.5.1.4.

TABLE II
LIMITING LINE LOSS

MODE	FLOW PATH	COMMENTS
F	1.5-13-2	SEE NOTE 5
D OR E	3-4-5-6-15-16-8-8.5-9-10	
A	7-7.5-14	
C	4-4.5-14	
B	12-13	SEE NOTE 6

VALVE POSITIONS

CONDITION	VALVE NO. F001		F005		F012	F011
MODE A	O		C		P	C
MODE B	C		O		C	C
MODE C	O		C		C	O
MODE D	O		O		C	C
MODE E	O		O		C	C
MODE F	O		O		C	C
MODE S	O		C		C	C

P - PARTIALLY OPEN
C - FULLY CLOSED
O - FULLY OPEN

Columbia Generating Station
Final Safety Analysis Report

Low-Pressure Core Spray - Process Diagram

Draw. No. 02E21-04,4,1 | Rev. 8 | Figure 6.3-6

48 inch Diameter Half - Strainer Configuration
for Penetrations X-32, X-35

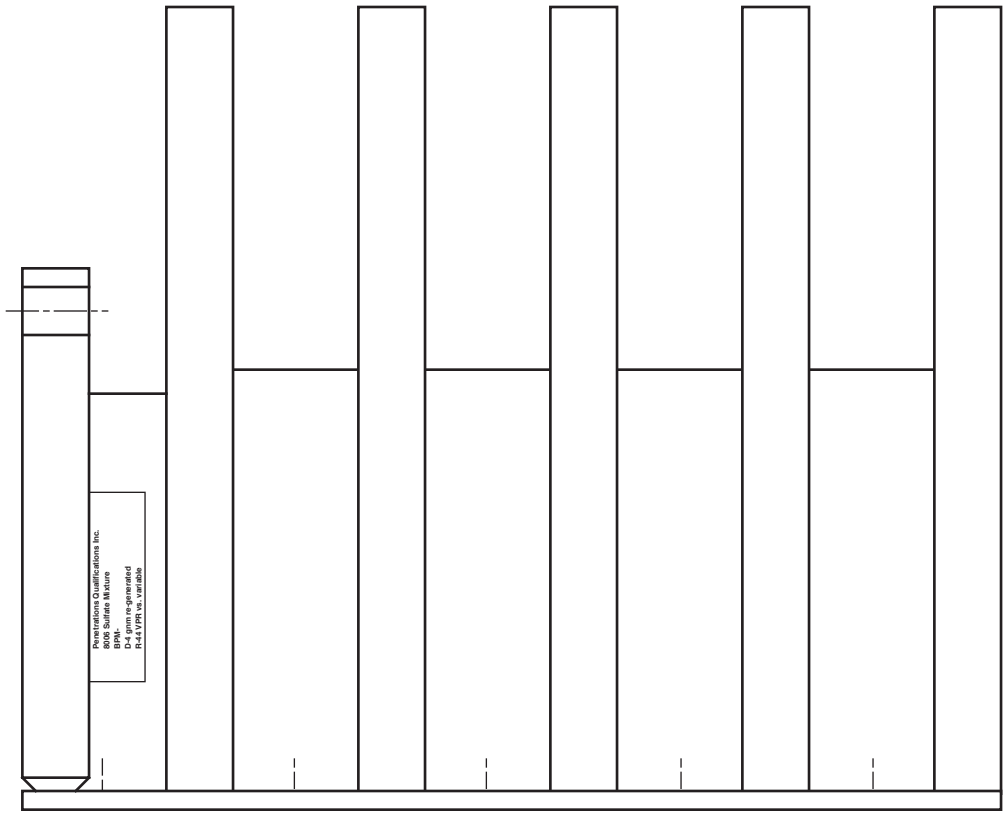

Note: Strainer halves are bolted together to form one strainer with a 47.5 inch Outer Diameter

Columbia Generating Station **Final Safety Analysis Report**	**Typical 48 in. Diameter Strainer**		
	Draw. No. **920843.07**	Rev.	Figure **6.3-7**

36 inch Diameter Strainer Configuration
for Penetrations X-31, X-34, and X-36

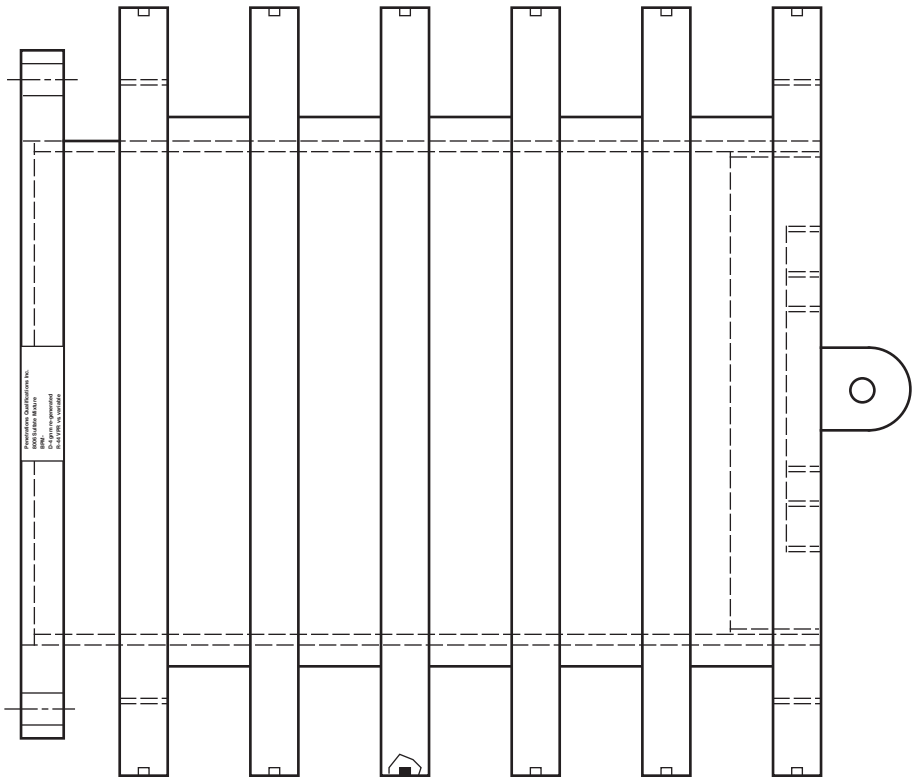

Note: The number of disks varies with strainer length.

Columbia Generating Station **Final Safety Analysis Report**	**Typical 36 in. Diameter Strainer**		
	Draw. No. **920843.06**	Rev.	Figure **6.3-8**

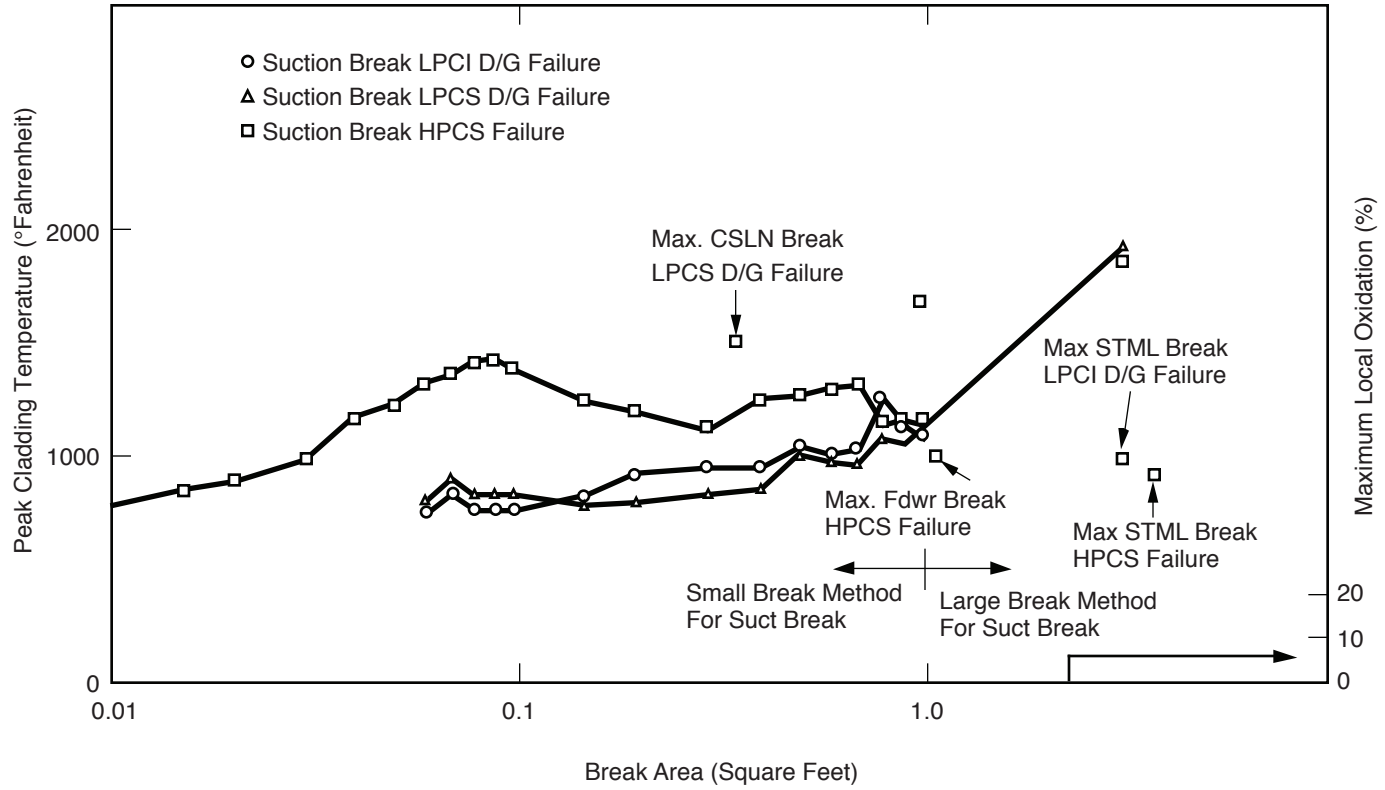

Columbia Generating Station Final Safety Analysis Report	**Peak Cladding Temperature and Maximum Local Oxidation Versus Break Area - Hanford Original Rated Power**		
	Draw. No. **960222.23**	Rev.	Figure **6.3-9**

6.4 HABITABILITY SYSTEMS

6.4.1 DESIGN BASIS

The main Control Room Envelope Habitability (CREH) systems are designed to ensure habitability inside the main control room. The CREH systems ensure the Control Room Envelope (CRE) occupants can control the reactor safely under normal conditions and maintain it in a safe condition following a radiological event, a hazardous chemical release, or a smoke challenge. The CREH systems ensure that adequate radiation protection is provided to permit access and occupancy of the CRE under design basis accident (DBA) conditions. Under DBA conditions, personnel will receive radiation exposures no greater than 5 rem total effective dose equivalent (TEDE) for the duration of the accident in accordance with 10 CFR part 50.67 as discussed in Chapter 15. The CREH Program ensures the CREH system is in compliance with General Design Criterion 19 (GDC 19) of 10 CFR 50, Appendix A, and in compliance with the guidance of Regulatory Guide 1.196.

Emergency supplies for the control room, technical support center (TSC), and operational support center will be provided by the Emergency Response Organization. Portable breathing apparatus is also provided in the control room for operating personnel protection in the event of a fire external to the plant or a chemical spill on or offsite. The control room heating, ventilating, and air conditioning (HVAC) is operated in the recirculation mode without filtration by the emergency filter units for both of these scenarios.

In the event of a LOCA, operating personnel within the control room are protected from airborne radioactivity for up to 30 days by means of pressurizing the control room with filtered air drawn from two separate remote fresh air intakes through the control room emergency filtration (CREF) system. Both intakes are physically remote from all plant structures. The CREF system has two redundant trains which can filter air drawn for the intakes. The system is designed such that both trains will start simultaneously, however a single train operation results in higher LOCA dose than a dual train operation, therefore the license basis LOCA dose analysis assumes a single train operation. If two trains start, the operator will be directed to not stop the second train until at least 10 hours post accident.

Adequate shielding is also provided to protect operating personnel from radiation streaming. The control room doors are adequately designed to protect operating personnel from a steam pipe break in the turbine generator building.

The control room HVAC is also pressurized in the event of a fire within the plant, but external to the control room, to prevent ingress of smoke or combustion vapors.

Components of the HVAC systems serving the control room that are required to ensure control room habitability and essential equipment operations are redundant, Seismic Category I, and powered from Class 1E buses.

6.4.2 SYSTEM DESIGN

6.4.2.1 Definition of Main Control Room Envelope

The main control room is located on el. 501 ft of the radwaste building. Included in the CRE are all essential control equipment of the plant plus a toilet, kitchen, dining area, and an office area. These areas are frequently occupied.

The CRE boundary is the combination of walls, floor, ceiling, doors, penetrations, ducting, and equipment that physically form the boundary of the CRE. The equipment boundary includes fan housings, air handlers, and associated drain loop seals of the control room ventilation systems. The ducting boundary includes the HVAC ducts serving the control room starting from the fresh air isolation dampers to the common supply header penetrating the control room ceiling, and up to the isolation damper in the kitchen and bathroom exhaust duct. The enclosed volume of the CRE is approximately 214,000 ft^3. See Reference 6.4-1 for a more detailed description of the CRE.

6.4.2.2 Ventilation System Design

A description of the ventilation systems serving the control room and a listing of the design and performance parameters of the ventilation system equipment is provided in Section 9.4.1.

6.4.2.3 Leaktightness

A description of system leaktightness is discussed in Section 9.4.1.

6.4.2.4 Interaction With Other Zones and Pressure Containing Equipment

Normal access into the main control room is through corridors that are radiologically clean. Chemicals stored within the radwaste building or the immediately adjacent structures are in small quantities and are not hazardous to control room personnel.

Within the main CRE, there are no pressure vessels or piping systems that would affect control room habitability, except for the individual Halon fire extinguishing system within the control panels. Halon emitted to the main control room would be in the form of leakage from the Halon flooding systems. If all the Halon cylinders in the largest system were to release

simultaneously, the projected concentration in the CRE would be about 2690 ppm (<0.3% by volume). This concentration is significantly less than the 50,000 ppm level at which the concentration would be immediately dangerous to life and health (IDLH). The decrease in oxygen concentration in the control room would be approximately 0.1%. The main control room is protected from external pressurized systems by distance and concrete shield walls.

6.4.2.5 Shielding Design

The control room is designed with adequate shielding to protect occupants from conditions of airborne activity in containment and the reactor building, airborne activity in the radwaste building, the activity surrounding the building as a result of isotopes released to the environment, and activity built up on the main control room filters (located one floor above the control room). The concrete walls surrounding the control room are a minimum 2 ft thick and the floor and ceiling slabs are a minimum 1 ft thick. Radiation streaming is minimized by locating equipment, cable tray, and duct penetrations in the areas where radioactive sources are weak or nonexistent. There are no significant piping penetrations into the main control room. The normal primary access doors have been designed with air locks and may be used to prevent air inleakage into the control room during ingress and egress. The control room dose analysis for a LOCA does not take credit for the installed control room door air locks to minimize air inleakage. Radiation streaming through the doors has also been analyzed and evaluated as insignificant.

Direct doses to the control room from confined sources such as in some areas of the radwaste building, the turbine building, and from potential DBA sources in containment and in the reactor building are negligible due to local shielding provided around the source and shielding around the control room. Radiation from containment must penetrate the following shielding before reaching the control room: the 0.75-in. steel containment shell, the 5-ft-thick concrete biological shield wall, the 2-ft-thick concrete reactor building wall, and the 2-ft-thick concrete control room wall. Similarly, a 2-ft-thick concrete wall exists between the turbine building and the 2-ft-thick control room wall. In areas, the turbine building wall is 42 in. thick for shielding and missile purposes yielding 5.5 ft of protection to the control room from turbine building radiation areas. The HVAC room above the control room has an 18-in. concrete roof slab. This room coupled with the 1-ft-thick concrete control room ceiling yields an effective 2.5 ft of concrete shielding for the control room ceiling.

Details of the dose evaluation for the control room are given in Chapter 15.

6.4.3 SYSTEM OPERATIONAL PROCEDURES

During normal and emergency operation the control room operator selects the air handling unit which operates to maintain design temperatures in the control room. Periodically the operating unit is exchanged with the standby unit so that the service time of both units is approximately

equal. In the event the operating unit fails, control room personnel start the standby unit from the control room.

The responses of the control room habitability system to either hazardous chemical or airborne radioactivity are compatible. In the event of a hazardous chemical release, the operators may take action to stop the exhaust fan, shut the associated damper, and close the fresh air inlet damper for each HVAC train. In the event of a hazardous radioactivity release, the operators may respond by closing the appropriate remote intake isolation valves. Portable breathing apparatus is available.

6.4.4 DESIGN EVALUATION

6.4.4.1 Radiological Protection

Personnel in the main control room are protected from the radiological effects of a postulated accident by pressurizing the main control room with 1000 cfm of filtered air drawn from either of two remote fresh air intakes. This operation limits the 30-day dose to operators to below that of GDC 19 of 10 CFR 50, Appendix A, and 10 CFR 50.67. Essential components of the control room habitability systems are redundant, Seismic Category I, and powered from Class 1E buses.

The emergency ventilation system is of the dual inlet design with manual isolation valves above the control room. See Section 9.4.1 for the system description. The guidance in Regulatory Guide 1.183 was used in the control room dose analyses for Columbia Generating Station (CGS) and is addressed in the individual event evaluations in Chapter 15.

6.4.4.2 Toxic Gas Protection

6.4.4.2.1 Chlorine

Chlorine is not used at CGS. Transportation routes involved in chlorine movements include Hanford Route 4 South to the west on which there may be four shipments per year. In the past, 1-ton cylinders have been shipped two or three times per year on the Hanford Railroad (750 ft east of CGS); however there have been none since June 1983 and it is anticipated that chlorine will continue to be transported on the highway instead.

Control room concentrations from a postulated accident were calculated using the methodology of References 6.4-2 and 6.4-3. Assuming no operator action, the maximum control room concentration of gaseous chlorine from an offsite accident involving the rupture of a 1-ton cylinder at a point 4500 ft directly upwind of the control room air intake is 29 mg/m^3 at 32 minutes after the arrival of the leading edge of the initial vapor cloud. This is below the 45 mg/m^3 2-minute toxicity limit specified in Reference 6.4-4.

The protection provided to the control room operators from an offsite chlorine release includes the capability of closing the control room air ducts with dampers and isolating the control room. The postulated accident and associated assumptions would yield concentrations exceeding the short-term exposure limit of 11.5 mg/m^3 specified by Reference 6.4-5 for approximately 3.5 hr assuming no operator action. Since the odor threshold is approximately 0.01 ppm (0.03 mg/m^3), per Reference 6.4-6, operators could quickly detect the presence of chlorine and isolate the control room. With this realistic assumption, there would be no hazardous exposure to chlorine.

In summary,

a. The CGS control room fresh air intake is not equipped with chlorine detectors and automatic isolation equipment,

b. No chlorine is stored onsite, and

c. Chlorine storage and movement within 5 miles is less than thresholds specified in Reference 6.4-4.

6.4.4.2.2 Sodium Oxide

The Department of Energy Fast Flux Test Facility (FFTF) is located approximately 4000 m southwest of CGS. A large quantity of liquid sodium was used in the operation of the FFTF. The facility is shut down and in the process of deactivation and decommissioning. Sodium has been drained from the primary and secondary heat transfer system loops and is being maintained in solid state in the Sodium Storage Facility tanks. A small amount of residual sodium remains in the piping systems and has been solidified (Reference 6.4-7).

The accident evaluated during the initial licensing of CGS was a liquid sodium release from a FFTF secondary loop component failure due to a tornado. The probability of such a release is significantly reduced because the primary and secondary loops are now drained and the sodium solidified. Since solidified sodium continues to be located at the site, this analysis is retained as a bounding event until the solidified sodium is removed from the site or the possibility of a release is further reduced.

The analysis is assumed that a failure occurs in the FFTF secondary loop component due to a tornado. A resulting postulated 100,000-lb sodium release over 20 hr was considered bounding for CGS control room habitability purposes (Reference 6.4-8).

The following assumptions are made:

a. Two million pounds of liquid sodium contained in the primary coolant loop are not considered in the analysis since it is contained in the FFTF reactor containment building,

b. 100,000 lb of liquid secondary sodium may be released and ignited,

c. Up to 36% of the sodium oxide formed in the combustion of the 100,000 lb of sodium may be released and transported away as an aerosol,

d. Fire resulting from the accidental release of 100,000 lb of sodium would consume the available sodium at whatever rate it is released, and

e. The average sodium oxide release rate assumed was for a 20-hr postulated incident at 2426.4 lb/hr.

Where applicable, Reference 6.4-4 was utilized. However, due to the nature of the postulated sodium fire and the complexities of the dispersion analysis, the following additional modeling assumptions were utilized:

a. CGS onsite meteorological data collected from April 1974 through March 1976 was used to establish the upper wind speed values in addition to the established 5% dispersion meteorology for the CGS site;

b. To account for the rise of sodium oxide aerosol due to the buoyancy of the hot gases, the height of rise of the aerosol plume was conservatively predicted using Part 1, References 6.4-9 and 6.4-10;

c. To account for settling and deposition of the sodium oxide particulates within the plume, depleted source terms were established (Reference 6.4-11); and

d. Six plume dispersion modeling equations were used to calculate concentrations outside the CGS control room fresh air intakes as a function of wind speed and stability. Credit for FFTF building wake dilution effects during high wind speed conditions, plume meandering for stable low wind speed conditions, and both a depleted plume equation and tilted plume equation to account for deposition were included as discussed in References 6.4-11, 6.4-12, and 6.4-13.

The analysis resulted in a maximum sodium oxide concentration outside the control room intakes of 8.7 mg/m^3. A wind speed of 1.2 m/sec would allow FFTF approximately 55 minutes to warn CGS control room personnel of the approaching sodium oxide cloud, assuming that the cloud was traveling directly toward the CGS site. The permissible warning

time, as well as the cloud concentration, would increase for lighter wind speed conditions, i.e., up to approximately 1.5-hr warning time for a 0.75 m/sec wind producing a maximum cloud concentration of 8.7 mg/m^3. Wind speeds greater than 1.2 m/sec yield concentrations less than the long-term toxicity limit of 2 mg/m^3.

A warning time of approximately 55 minutes is sufficient to permit proper notification to take place between FFTF and Energy Northwest personnel, to isolate the CGS control room. Procedural arrangements are in place between FFTF and Energy Northwest for timely notification of the control room in the event of a sodium oxide release. In the unlikely event that sodium oxide enters the control room, portable breathing equipment is available.

6.4.4.2.3 Miscellaneous Chemicals

Other onsite stored chemicals were reviewed in accordance with Reference 6.4-4 to assess their potential impact on the habitability of the control room in the event of postulated hazardous chemical releases. Chemicals stored onsite and analyzed for impact on the control room habitability are ammonium hydroxide, carbon dioxide, trichlorofluoromethane (Freon-11), dichlorodiflоromethane (Freon-12), chlorodifluoromethane (Freon-22), trichlorotrifluoromethane (Freon-113), and 1,1,1,2-tetrafluoromethane (Freon-134a), hydrogen peroxide, hydrogen, isopropyl alcohol, methyl ethyl ketone, nitrogen (liquid), propane, sodium hydroxide (in solution), sodium hypochlorite, sodium bromide, and sulfuric acid, diesel fuel, ethylene glycol, fyrquel, GE Betz Dearborn inhibitor AZ8104, gasoline, Halon 1301, hydrochloric acid, mineral spirits, insecticide, herbicides, fertilizers, lubricants, transformer oils, ONDEO NALCO chemicals, paint products, propylene glycol, polyaluminum chloride solution, and sulfur hexafluoride (SF6) gas.

The analysis (Reference 6.4-14) indicated that most of these chemicals did not require chemical hazard evaluations due to the fact that they exist in small quantities, are stored far away from the control room intakes, have a very low vapor pressure, or are bounded by the results of the calculations performed on the chemicals listed below.

The following chemicals met the screening criteria of Reference 6.4-4 required a chemical hazard evaluation:

a. A liquid nitrogen storage tank containing 75,000 lb of nitrogen located at the corner of the diesel generator building.

b. A tank containing 12,000 lb of cardox (CO2) stored in the turbine generator building.

c. A 55-gallon drum containing ammonium hydroxide stored approximately 100 ft from building 74 (warehouse for maintenance lubricants).

d. Two tanks containing 1700 gallons each of Freon-11 stored in the Refrigerant Storage and Maintenance building (Building 72) approximately 800 ft from the nearest control room air intake.

Postulated releases to the atmosphere and subsequent transport to control room fresh air intakes of these chemicals were evaluated. The results of the analysis (Reference 6.4-14) indicated that an accidental release of these chemicals will result in concentrations in the control room that are well below the toxicity limit of each of the chemicals. Therefore, these chemicals do not pose a hazard to the control room operators.

There are a significant number of compressed gas bottles containing process gasses such as nitrogen, hydrogen, argon, helium and others containing acetylene, argon/methane and oxygen used within the plant buildings and onsite bottle storage locations. These gas bottles do not represent a control room habitability concern due to the small quantity of gas contained in each bottle.

Maximum quantities of hydrogen gas stored in the gas bottle storage building (120 bottles containing a total of 144 lb) and in a trailer parked adjacent to the gas bottle storage building containing 294 lb will not pose any problem because the lightness and dispersal qualities of the gas and the distances (approximately 400 ft) to the nearest control room air intake would result in negligible concentrations at that location.

The Hydrogen Storage and Supply Facility (HSSF) has a maximum storage capacity of approximately 9800 pounds of liquid and gaseous hydrogen. The storage of this amount of hydrogen at the HSSF is not considered a hazard for control room habitability due to the distance (approximately 2900 ft) between the closest fresh air intake and the HSSF.

An 18,000-gal sulfuric acid storage tank, one 5000-gal tank of sodium hypochlorite, and one 5000-gal tank of sodium bromide are located near the circulating water pump house approximately 570 ft from the control room intake. A 2050-gal biodispersant storage tank, one (1) 1550-gal antifoam tank, and one (1) 4050-gal sodium bisulfite tank are located near the east wall of the Circulating Water Pump House (CWPH). The tanks are located approximately 550 feet from the control room intake. Two 2100-gal tanks of hydrogen peroxide are located near pump house 1B (approximately 300 ft from the control room intake). Other stored chemicals include 500-gal propane tanks (located over 1100 ft from the control room intake), as well as other miscellaneous or transient storage of lesser quantities of chemicals that are bounded by the analyses performed for the chemicals stored in bulk quantities.

6.4.5 TESTING AND INSPECTION

The main control room HVAC system and its components are tested as follows:

a. Predelivery and component qualification tests,
b. Postdelivery acceptance tests, and
c. Postoperation surveillance tests.

Written test procedures establish acceptable criteria for the tests. The tests are performed to meet the objectives of Regulatory Guide 1.52 and Regulatory Guide 1.197.

The factory and component qualification tests consist of the following:

a. All equipment was factory inspected and tested in accordance with the applicable equipment specifications, codes, and quality assurance requirements. System ductwork and erection of equipment was inspected during various construction stages for quality assurance. Construction tests were performed on all mechanical components and the system was balanced for the design air and water flows and system operating pressures. Controls, interlocks, and safety devices were checked, adjusted, and tested to ensure the proper sequence of operation.

b. The emergency filter units, which are normally in standby, are started periodically to ensure fan operation. The fans are factory tested in accordance with AMCA Standard 210, "Air Moving and Conditioning Association, Test Code for Air Moving Devices."

   Filters are tested as described in Section 9.4.1.

c. All valves associated with the control room HVAC system are factory leak tested, bubble tight, at a pressure differential of 0.2 psig. Electrically operated valves are factory tested to ensure that valve stroke time, full open to full close, does not exceed 4 sec. Once installed, the valves are stroked to verify operability. The fresh-air intake valves are periodically tested to ensure control room inleakage through closed intake valves is minimized.

d. The postdelivery acceptance tests are performed as described in Section 14.2.

e. The operational surveillance testing is described in the Technical Specifications.

6.4.6 INSTRUMENTATION REQUIREMENTS

A discussion of instrumentation associated with main control room habitability systems is provided in Sections 9.4.1 and 7.3.1.1.7.

6.4.7 REFERENCES

6.4-1 "Control Room Boundary Leakage Limitations," TM-2082, Revision 5.

6.4-2 Turner, D. B., Workbook of Atmospheric Dispersion Estimates, Public Health Service, U.S. Department of Health Education, and Welfare, Figures 3.2 and 3.3, 1970.

6.4-3 Wing, J., Toxic Vapor Concentration in the Control Room Following a Postulated Accidental Release, NUREG-0570, Nuclear Regulatory Commission, June 1979.

6.4-4 "Assumptions for Evaluating the Habitability of a Nuclear Power Plant Control Room During a Postulated Hazardous Chemical Release," Regulatory Guide 1.78, June 1974.

6.4-5 Nuclear Regulatory Commission, Standard Review Plan, Section 6.4, NUREG-0800 (Revision 2), July 1981.

6.4-6 Occupational Health Guidelines for Chemical Hazards, NIOSH, U.S. Department of Health and Human Services, August 1981.

6.4-7 FFTF Hazard Analysis Supporting Discussion & Analysis, "Fast Flux Test Facility Hazard Assessment," HNF-SD-PRP-HA-0.15 Revision 6, April 31, 2007.

6.4-8 Excerpts from Sections 6.4, "Habitability System," and 15.2, "Accident Analyses," of the FFTF FSAR (Amendment 3, February 1, 1977).

6.4-9 Briggs, G. A., "Plume Rise: A Recent Critical Review," Nuclear Safety Vol. 12, No. 1, 1971.

6.4-10 Briggs, G. A., "Plume Rise Predictions," Lectures on Air Pollution and Environmental Impact Analysis, American Meteorological Society, Boston, Mass., 1975.

6.4-11 Slade, D., Meteorology and Atomic Energy, U.S. Atomic Energy Commission, Division of Technical Information, Springfield, VA 1968.

6.4-12 Stern, A. C., Air Pollution, Their Transformation and Transport, Vol. I Third Edition, Academic Press, New York, 1976.

6.4-13 Nuclear Regulatory Commission, BTP HMB, Diffusion Conditions for Design Basis Accident Evaluations, 1977.

6.4-14 "Chemical Hazard Analysis for Control Room Habitability," CGS calculation number NE-02-06-02, April 2007.

6.5 FISSION PRODUCT REMOVAL AND CONTROL SYSTEMS

6.5.1 ENGINEERED SAFETY FEATURE FILTER SYSTEMS

There are two air filtration systems that are required to perform safety-related functions following a design basis accident. They are the control room emergency filtration (CREF) system, which is described in Sections 6.4 and 9.4.1, and the standby gas treatment (SGT) system described in this section.

6.5.1.1 Design Bases

The SGT system is designed to maintain airborne radioactive release from the secondary containment to the atmosphere within the limits required by 10 CFR 50.67. The system is designed to enable purging of the primary containment through the SGT system filters when airborne radiation levels inside the primary containment are too high to permit direct purging to atmosphere by means of the reactor building exhaust system as discussed in Section 9.4.

The SGT system design meets seismic requirements and single failure criterion. Each SGT system filter train is sized to maintain the secondary containment (reactor building) at least 0.25-in. water gauge below atmospheric pressure under the following conditions:

a. Air leakage into the secondary containment at a continuous rate of one building air change per day,

b. A drop in barometric pressure at the rate corresponding to adverse meteorological conditions,

c. Relative humidity increase resulting from vapor from the spent fuel pool, and

d. The volumetric expansion of air within the secondary containment due to the heat sources in the reactor building.

6.5.1.2 System Design

The SGT system is shown in Figure 3.2-2. The layout of the SGT system units is shown in Figure 12.3-23. Principal system components are listed and described in Table 6.5-1. The system consists of two fully redundant filter trains, each of which consists of the following components in series:

a. A demister (moisture separator) to remove entrained water particles in the incoming air stream;

b. Two banks of electric blast coil heaters, one primary and one backup, each powered from separate emergency diesel buses. Each heater is composed of three 6.9 kW stages and is sized to limit the relative humidity of the heated air to 70% at design flow during post-LOCA conditions;

c. A bank of prefilters to remove most particulates from the air stream. The filters have an atmospheric dust spot efficiency of 80-85% by ASHRAE Standard 52.1 (MERV 13 rating by ASHRAE standard 52.2);

d. A bank of high-efficiency particulate air (HEPA) filters to remove virtually all particulates, including iodine fission products from the airstream;

e. Two 4-in.-deep bank of charcoal adsorber filters are installed in series. Filters are of an all-welded, gasketless design. Each charcoal adsorber filter has electric strip heaters.

f. A second bank of HEPA filters, identical to item d. The function of this second HEPA filter bank is to capture charcoal dust as well as particulate fission product releases that may escape from the charcoal filters.

All of the above components are mounted in an all welded steel housing. The SGT filter trains are located on the el. 572 ft of the reactor building. A 12-in.-thick concrete partition wall, 14 ft high, separates the two trains. The Seismic Category I design partition wall serves as both a missile barrier and fire barrier between the two trains.

There are at least 2268 lb of charcoal in each of the two adsorber units. The adsorbing capability of each unit is 2.5 mg of halogens per gram of charcoal or a total of 2577 g. The maximum theoretical accumulation of halogens on the SGT system adsorbers for a 30-day period after a LOCA is 67 g.

Three independent deluge spray systems are provided for fire protection in each SGT filter train. One deluge spray system is provided for protection of the prefilter and a deluge spray system is provided for each of the two charcoal filter beds.

Two centrifugal fans are provided with each SGT filter train. The primary fan starts automatically upon receipt of an initiation signal. The backup fan operates only in the event of primary fan failure. The two fans of each unit are powered from separate emergency diesel buses. Two identical control systems which are supported by emergency power adjust the automatic inlet vanes on the fans to control flow rate. See Section 7.3.1.1.9. Ductwork and butterfly valves on the discharge air side of each filter train are arranged such that either fan can draw air through the filter train and discharge it either out of the reactor building, by means of the reactor building elevated release duct, or back into the reactor building.

Provision is made to return air to the reactor building so that decay heat generated within the SGT unit due to the collection of radioactive contaminants is removed.

Ductwork and valving for the intake of each SGT unit is configured so that the units can draw air from the reactor building in the immediate vicinity of the unit, the primary containment drywell, the wetwell, or from any combination of the three locations. The connection to primary containment is through the primary containment purge exhaust lines.

During normal plant operation both SGT units are on standby. In standby, only the strip heaters in the charcoal sections operate. The strip heaters cycle to maintain the filter plenum temperature to ensure that the relative humidity within the plenum does not exceed 70%. This protects the charcoal adsorber from condensed moisture.

The maximum dewpoint temperature in the reactor building during normal plant operation is 75°F. When in standby, all isolation valves downstream of the unit fans are closed.

Whenever the drywell requires venting to relieve pressure, purging to inert or to deinert, or purging to improve the quality of the drywell atmosphere, the SGT system can be used to treat the effluent gas before release. For this process, the system is manually operated from the control room. The operator initiates the SGT system and adjusts SGT flow to the required flow rate. A sensor in the fan discharge duct transmits a flow signal to a recorder monitored by the operator during the evolution. Purge supply air to the primary containment is supplied from the reactor building supply air system. During the process of inerting, nitrogen gas is supplied from the containment nitrogen inerting system.

Both SGT filter trains are automatically actuated by the following signals:

a. High radiation in the reactor building ventilation exhaust duct,
b. High pressure in the drywell, and
c. Reactor vessel low-low water level.

When actuated the following sequence of events occur in each SGT train:

a. The primary bank of electric blast coil heaters is energized and all valves begin to move to their proper positions;

b. After the primary bank of heaters has time to reach a temperature that will ensure air entering the charcoal bed is maintained below 70% relative humidity, the primary fan receives a start signal;

c. If the primary fan fails to start or run, following a time delay, the primary fan and heater are deenergized. Then the primary fan inlet valve receives a close signal and the backup heater is energized. Next, following an additional time

delay to reach temperature, the backup fan isolation valve is opened and the backup fan receives a start signal;

d. The operating fan inlet vane position is controlled by the reactor building pressure control system to ensure that secondary containment pressure is reduced to at least a negative pressure of 0.25 in. w.g.. The control system will adjust fan flow rate as needed to maintain the negative pressure.

Both SGT units are operating within two minutes following the initiation signal. The same sequence is followed if the initiation signal is coincident with a loss of offsite power.

The operator may stop one of the SGT trains from the control room after startup is complete. In the event that the radiation monitors in the discharge duct indicate an unacceptable radiation level in the system discharge air, the operator starts the second unit and diverts the discharge air of the operating unit back into the reactor building to minimize offsite release of halogens and to cool the charcoal bed.

The following is a comparison of the engineered safety feature (ESF) filtration systems with each position detailed in Regulatory Guide 1.52, Revision 2, and Revision 3 as applicable.

Article A - Introduction

The ESF filtration systems provided for CGS are designed to the General Design Criterion referenced in Article A. Those systems designed to meet the criterion are:

a. Standby gas treatment system, and
b. Control room emergency filtration system.

Article B - Discussion

The two systems are both classed as secondary systems and are not subject to the drywell environment during any design basis accident and are not subject to containment cooling sprays. Equipment design includes the ability to operate under all environmental conditions to which they can be subjected during accident conditions. The components of each control room filter unit are as described in this article except that no demisters are required and HEPA filters are not provided downstream of the charcoal adsorber section. The effects of aging, weathering, and relative humidity have been considered in the design of these atmosphere cleanup systems, and they are tested periodically to verify required performance capability.

The effects of moisture on the charcoal adsorber media is minimized by the use of strip heaters for humidity control in the plenum of the charcoal adsorbers section of the SGT system units and by periodically circulating heated air through the control room emergency filtration units. Adequate space and accessibility for personnel has been incorporated in filter unit design to

ensure maintainability and testability. Testing of filters is performed as specified in the Technical Specifications.

Article C - Regulatory Position

Section 1.8.3 provides an analysis of the engineered safety feature air filtration systems with respect to the regulatory positions of Regulatory Guide 1.52, Revision 2.

Section 1.8.3 provides an analysis of required monthly run time to justify operability of the system and all components with respect to Regulatory Position 6.1 of Regulatory Guide 1.52, Revision 3.

6.5.1.3 Design Evaluation

The SGT system is designed to prevent the exfiltration of contaminated air from the secondary containment following an accident or abnormal occurrence. All necessary equipment and surrounding structures are Seismic Category I. The ESF buses supply power to the SGT system in the event of loss of normal ac power. Two fully redundant equipment trains separated by a missile wall are provided to ensure that a single failure does not impair or preclude system operation.

6.5.1.4 Tests and Inspections

The SGT system and its components are thoroughly tested in a program consisting of the following classifications:

a. Predelivery tests and component qualification tests,
b. Postdelivery acceptance tests, and
c. Postoperation surveillance tests.

All SGT system fans were factory tested in accordance with AMCA Standard 210, "Air Moving and Conditioning Association Test Code for Air Moving Devices." Fans are started once per month to ensure operability.

Written test procedures establish acceptance criteria for all tests. Test results are recorded in performance records.

Predelivery tests were performed to meet the objectives of Regulatory Guide 1.52, Revision 2. Postdelivery tests were performed to meet the objectives of Regulatory Guide 1.52, Revision 2 (using ANSI N510-1980). Postoperation tests are performed as specified in the Technical Specifications.

The HEPA filters are factory tested to a minimum efficiency of 99.97% when measured with a 0.3-micron dioctyl phthalate (DOP) aerosol. Tests are performed in accordance with

ASME AG-1-1997. See Section 1.8.3 for compliance by alternate approach to Regulatory Guide 1.52, Revision 2. In place leak testing of the HEPA filters is conducted in accordance with Regulatory Guide 1.52, Revision 2, as discussed in Section 1.8.3, to demonstrate a penetration and system bypass of less than 0.05%.

Charcoal media qualification tests meet the objectives of Regulatory Guide 1.52, Revision 2.

Charcoal samples laboratory test results are required within 31 days of removal.

Charcoal beds are leak tested in accordance with the Technical Specifications to demonstrate a penetration and system bypass of less than 0.05%.

Valves associated with the SGT system were factory leak tested, bubble tight, at a pressure differential of 2 psig. Valves were factory tested to ensure that valve stroke time, full close to full open, did not exceed 4 sec. The SGT system valves are periodically stroked as specified in the Technical Specifications to ensure operability.

6.5.1.5 Instrumentation Requirements

Additional information regarding the instrumentation and control system for SGT is contained in Section 7.3.1.

The instrumentation and controls are designed to meet the objectives of Regulatory Guide 1.52, Revision 2.

The following instrumentation is provided for each SGT train in addition to that previously described:

a. An indicating differential pressure gauge is provided across each element (excluding heaters) in the SGT train. High differential pressure alarms in the main control room and is recorded by computer;

b. Relative humidity detectors with humidity indication in the main control room are located before the electric blast coil heaters and the charcoal adsorber banks. High humidity alarms in the main control room and is recorded by computer;

c. Thermostats with sensors on either side of an adsorber section control strip heaters in both adsorber plenum sections. Two thermostats in parallel energize the heaters on a temperature drop to 90°F. Another thermostat deenergizes the heaters on a temperature rise to 110°F, with a manual reset thermostat cutting out the heaters on a temperature rise to 125°F; and

d. Temperature indication is provided in the main control room for air entering the electric blast coil heater section and the air leaving both banks of charcoal

filters. Temperature switch sensors are located on the downstream side of the prefilter and adsorber sections. A temperature rise to 250°F causes an alarm in the main control room. The control room operator determines the cause of the temperature rise and can manually initiate the deluge spray system if necessary.

6.5.1.6 Materials

The housings and framing materials of the SGT filter units are fabricated of steel alloys and, as such, are nonflammable. The following is a list of the materials used in the various components of the SGT filter units.

Demisters - The demister (moisture separator) section of each SGT unit consists of four assemblies of metal baffle plates and fiberglass separator pads. Each assembly has three fiberglass pads and one 4-in.-thick galvanized metal moisture eliminator with a nominal face area of 16 x 20 in.

Prefilters - There are four 24 in. x 24 in. prefilters in each SGT unit. The prefilters are a pleated, U.L. Class 1, fiberglass mounted on a metal retainer frame.

Absolute Particulate Filters - There are two banks of HEPA filters, one before and one after the charcoal adsorber section, on each SGT filter unit. The HEPA filters consist of U.L. Class 1 fiberglass media in stainless steel frames with aluminum separators. There are four 24 in. x 24 in. filters in each filter bank.

Charcoal Adsorber Media - Each charcoal adsorber filter unit (two per SGT train) contains about 40 ft^3 of charcoal. The charcoal used in the filters is a potassium iodide or triethylenediamine (TEDA) impregnated coconut base charcoal. Typically, over 1000 lbs of charcoal are contained in each of the four filter units.

The only material in the SGT units that supports combustion is the charcoal, which has a minimum ignition temperature of 330°C. The charcoal is provided with a deluge spray system. A 12-in.-thick concrete partition wall is provided between the two SGT units for fire protection.

6.5.2 CONTAINMENT SPRAY SYSTEM

Design Bases

The containment spray system is capable of reducing containment pressure during the postaccident period of a LOCA through condensation of steam in the drywell and through cooling of the noncondensable gases in the free volume above the suppression pool. Containment spray is not required to prevent overpressurization of the containment.

The containment spray system also provides for fission product removal from the containment atmosphere. During a LOCA a substantial fraction of the fission product release occurs after initial blowdown is complete. No credit is taken for suppression pool scrubbing of the wetwell air space. A portion of the fission products released from the reactor pressure vessel will be removed from the drywell atmosphere by drywell sprays. The drywell sprays are assumed to be initiated 15 minutes after the LOCA and turned off after one day.

6.5.3 FISSION PRODUCT CONTROL SYSTEMS

The release of fission products to the environment in the event of a LOCA is controlled passively by the leaktight integrity of the primary and secondary containments and actively by the SGT system that filters the effluent from the secondary containment.

6.5.3.1 Primary Containment

Primary containment response to a design basis accident is discussed in Section 6.2.1. Figure 6.2-23 provides a basic layout of the primary containment.

In the event of a LOCA, oxygen concentration is controlled by the containment atmosphere control system which mixes, monitors, and controls the containment atmosphere as described in Section 6.2.5. Primary containment purging is discussed in Section 6.2.1.

6.5.3.2 Secondary Containment

The SGT system is provided to control the release of fission products from the secondary containment to the environment. Secondary containment details are provided in Section 6.2.3 and SGT system details are provided in Section 6.5.1.

6.5.3.3 Standby Liquid Control (SLC) System

The SLC system is initiated as directed by procedure to inject sodium pentaborate solution into the reactor pressure vessel when there is evidence of fuel damage following a LOCA. Flow from the break will carry the boron to the suppression pool. Maintaining the pool pH above 7.0 for the duration of the accident will minimize the re-evolution of gaseous iodine. See Section 9.3.5.

Table 6.5-1

Standby Gas Treatment System
Component Description Per Unit

Charcoal Filters

Type	Deep bed
Quantity	Two in series
Design Flow (acfm)	4800
Media	Charcoal
Radioiodine removal	Not less than 99.5% methyl iodide, tested at 30°C and 70% relative humidity
Depth of each bed (in.)	4
Pressure drop, clean (in. wg)	2.0
Residence time each train (sec.)	≥ 0.5
Ignition temperature, minimum (°C)	330
Iodine desorption temperature range (°F)	250-300 (low threshold)
Charcoal halogen loading, gm	67 (maximum theoretical loading for 30-day accident duration) 2577 (absorbing capability)

HEPA Filters

Type	High efficiency, dry
Quantity	Two banks, four filters each
Capacity (acfm)	4800 each bank
Media	Fiberglass U.L. Class 1
Efficiency (%)	99.97 with 0.3-micron DOP aerosol
Pressure drop, clean (in. wg)	1.0 nominal

Prefilter

Type	Medium efficiency, dry
Quantity	One bank, four filters
Design Flow (acfm)	4800
Media	Fiberglass
Efficiency (%)	80-85%
Pressure drop, clean (in. wg)	0.5 nominal

Table 6.5-1

Standby Gas Treatment System
Component Description Per Unit (Continued)

Heater

Type	Electric, on-off
Quantity	Two banks
Capacity (kW)	20.7 (nominal each bank)
Stages	Three

SGT System Exhaust Fans

Type	Centrifugal (with volume control)
Quantity	Two 100% capacity units
Design Flow (acfm)	4800
Static Pressure (in. wg)	16 nominal
Drive	Direct
Motor (hp)	25

Demister

Type	Multiple bed
Quantity	One bank, four filter units
Design Flow (acfm)	4800
Media	Metal baffle plate and fiberglass pads
Pressure drop, clean (in. wg)	0.8 nominal

6.6 INSERVICE INSPECTION OF ASME CODE CLASS 2 AND CLASS 3 COMPONENTS

The structural integrity of ASME Code Class 2 and 3 components is maintained as required by the Inservice Inspection (ISI) Program in accordance with 10 CFR 50.55a. With the structural integrity of any component not conforming to the above requirements, the structural integrity will be restored to within its limits or the affected component will be isolated. For Class 2 components, isolation will be accomplished prior to increasing reactor coolant system temperature above 200°F.

The Preservice Inspection Program Plan (Reference 5.2-6) addresses preservice inspections of Quality Groups B and C (ASME Boiler and Pressure Vessel Code, Section III Class 2 and 3) components as required by Section XI of the ASME Boiler and Pressure Vessel Code.

The Inservice Inspection Program (ISI) addresses inservice inspections of Quality Groups B and C (ASME Boiler and Pressure Vessel Code, Section III, Class 2 and 3) components as required by Section XI of the ASME Boiler and Pressure Vessel Code.

6.7 MAIN STEAM ISOLATION VALVE LEAKAGE CONTROL SYSTEM

The main steam isolation valve leakage control system (MSLC) is isolated and deactivated. The structural integrity of piping systems and components left in place is maintained.

Chapter 7

INSTRUMENTATION AND CONTROL SYSTEMS

TABLE OF CONTENTS

Section — Page

7.1 INTRODUCTION 7.1-1
7.1.1 IDENTIFICATION OF SAFETY-RELATED SYSTEMS 7.1-1
7.1.1.1 Reactor Protection System 7.1-1
7.1.1.2 Primary Containment and Reactor Vessel Isolation Control System 7.1-1
7.1.1.3 Emergency Core Cooling System 7.1-1
7.1.1.4 Neutron Monitoring System 7.1-2
7.1.1.5 Process Radiation Monitoring System 7.1-2
7.1.1.6 Main Control Room and Critical Switchgear Rooms Heating, Ventilating, and Air Conditioning System 7.1-2
7.1.1.7 Standby Service Water System 7.1-2
7.1.1.8 Containment Atmosphere Control System 7.1-2
7.1.1.9 Reactor Core Isolation Cooling System 7.1-3
7.1.1.10 Standby Liquid Control System 7.1-3
7.1.1.11 Leak Detection System 7.1-3
7.1.1.12 Residual Heat Removal System - Shutdown Cooling Modes 7.1-3
7.1.1.13 Fuel Pool Cooling and Cleanup System 7.1-3
7.1.1.14 Suppression Pool Temperature Monitoring System 7.1-3
7.1.1.15 Standby Gas Treatment System 7.1-3
7.1.1.16 DELETED 7.1-3
7.1.1.17 Safety-Related Display Instrumentation 7.1-4
7.1.1.18 Containment Instrument Air System 7.1-4
7.1.1.19 Residual Heat Removal System - Containment Spray Cooling Mode 7.1-4
7.1.1.20 Remote Shutdown System 7.1-4
7.1.1.21 Recirculation Pump Trip 7.1-4
7.1.1.22 Residual Heat Removal System - Suppression Pool Cooling Mode 7.1-4
7.1.1.23 Anticipated Transient Without Scram Recirculation Pump Trip 7.1-4
7.1.1.24 Anticipated Transient Without Scram - Alternate Rod Insertion 7.1-4
7.1.2 IDENTIFICATION OF SAFETY CRITERIA 7.1-5
7.1.2.1 Regulatory Requirements 7.1-5
7.1.2.2 Regulatory Conformance - 10 CFR 50 Appendix A 7.1-5
7.1.2.3 Conformance to Institute of Electrical and Electronics Engineers Standards 7.1-5
7.1.2.4 Conformance to Regulatory Guides 7.1-7
7.1.2.5 Instrument Errors 7.1-10

Chapter 7

INSTRUMENTATION AND CONTROL SYSTEMS

TABLE OF CONTENTS (Continued)

Section	Page
7.2 REACTOR PROTECTION (TRIP) SYSTEM	7.2-1
7.2.1 DESCRIPTION	7.2-1
7.2.1.1 Reactor Protection System Description	7.2-1
7.2.1.1.1 Neutron Monitoring System Trip	7.2-3
7.2.1.1.1.1 Intermediate Range Monitors	7.2-4
7.2.1.1.1.2 Average Power Range Monitors	7.2-4
7.2.1.1.2 Reactor Vessel Pressure	7.2-5
7.2.1.1.3 Reactor Vessel Water Level	7.2-5
7.2.1.1.4 Turbine Throttle Valve Position	7.2-6
7.2.1.1.5 Turbine Governor Valve Position	7.2-6
7.2.1.1.6 Main Steam Line Isolation Valves Position	7.2-7
7.2.1.1.7 Scram Discharge Volume Water Level	7.2-8
7.2.1.1.8 Drywell Pressure	7.2-8
7.2.1.1.9 Manual Scram	7.2-8
7.2.1.1.10 Reactor Mode Switch Manual Scram	7.2-9
7.2.1.2 Design Basis	7.2-9
7.2.1.2.1 Variables Monitored to Provide Protective Actions	7.2-9
7.2.1.2.2 Location and Minimum Number of Sensors	7.2-9
7.2.1.2.3 Prudent Operational Limits	7.2-10
7.2.1.2.4 Margin	7.2-10
7.2.1.2.5 Levels	7.2-11
7.2.1.2.6 Malfunctions, Accidents, and Other Unusual Events Which Could Cause Damage to Safety Systems	7.2-11
7.2.1.2.6.1 Floods	7.2-11
7.2.1.2.6.2 Storms and Tornadoes	7.2-11
7.2.1.2.6.3 Earthquakes	7.2-11
7.2.1.2.6.4 Fires	7.2-12
7.2.1.2.6.5 Loss-of-Coolant Accident	7.2-12
7.2.1.2.6.6 Pipe Break Outside Primary Containment	7.2-13
7.2.1.2.6.7 Missiles	7.2-13
7.2.1.2.7 Minimum Performance Requirements	7.2-13
7.2.1.3 Final System Drawings	7.2-13
7.2.2 ANALYSIS	7.2-13
7.2.2.1 Conformance to 10 CFR 50, Appendix A, General Design Criteria	7.2-13
7.2.2.2 Conformance to IEEE Standards	7.2-15
7.2.2.3 Conformance to NRC Regulatory Guides	7.2-20

Chapter 7

INSTRUMENTATION AND CONTROL SYSTEMS

TABLE OF CONTENTS (Continued)

Section Page

7.3 ENGINEERED SAFETY FEATURE SYSTEMS 7.3-1
7.3.1 DESCRIPTION 7.3-1
7.3.1.1 System Description 7.3-1
7.3.1.1.1 Emergency Core Cooling Systems 7.3-1
7.3.1.1.1.1 High-Pressure Core Spray System. 7.3-2
7.3.1.1.1.2 Automatic Depressurization System 7.3-4
7.3.1.1.1.3 Low-Pressure Core Spray 7.3-5
7.3.1.1.1.4 Residual Heat Removal System - Low Pressure Coolant Injection Mode. 7.3-6
7.3.1.1.2 Primary Containment and Reactor Vessel Isolation Control System (PCRVICS) 7.3-9
7.3.1.1.2.1 Reactor Vessel Low Water Level 7.3-10
7.3.1.1.2.2 Drywell High Pressure 7.3-11
7.3.1.1.2.3 Main Steam Line - High Radiation 7.3-11
7.3.1.1.2.4 Main Steam Line - Tunnel High Ambient Temperature or High Differential Temperature 7.3-11
7.3.1.1.2.5 Main Steam Line - High Flow 7.3-12
7.3.1.1.2.6 Main Steam Line - Low Pressure 7.3-12
7.3.1.1.2.7 Reactor Building Ventilation Exhaust Radiation Monitor 7.3-13
7.3.1.1.2.8 Reactor Water Cleanup System - High Differential Flow 7.3-13
7.3.1.1.2.9 Reactor Water Cleanup System - Area High Ambient Temperature or High Differential Temperature 7.3-13
7.3.1.1.2.10 Reactor Water Cleanup System - High Blowdown Flow 7.3-14
7.3.1.1.2.11 Residual Heat Removal System - Area High Ambient Temperature or High Differential Temperature 7.3-14
7.3.1.1.2.12 Residual Heat Removal System - Flow Rate Monitoring 7.3-14
7.3.1.1.2.13 Main Condenser Vacuum Trip 7.3-15
7.3.1.1.2.14 Reactor Core Isolation Cooling System Isolation Signals. 7.3-15
7.3.1.1.3 DELETED 7.3-15
7.3.1.1.4 Residual Heat Removal System - Containment Spray Cooling Mode 7.3-15
7.3.1.1.5 Residual Heat Removal System - Suppression Pool Cooling Mode 7.3-16
7.3.1.1.6 Standby Service Water System 7.3-17
7.3.1.1.7 Main Control Room and Critical Switchgear Rooms Heating, Ventilating, and Air Conditioning System 7.3-18
7.3.1.1.8 Standby Gas Treatment System 7.3-18

Chapter 7

INSTRUMENTATION AND CONTROL SYSTEMS

TABLE OF CONTENTS (Continued)

Section — Page

7.3.1.1.9 Reactor Building Ventilation and Pressure Control System 7.3-18
7.3.1.1.10 Containment Instrument Air System 7.3-19
7.3.1.2 Design Basis 7.3-20
7.3.1.2.1 Variables Monitored to Provide Protective Action 7.3-20
7.3.1.2.2 Location and Minimum Number of Sensors 7.3-22
7.3.1.2.3 Prudent Operational Limits 7.3-22
7.3.1.2.4 Margin 7.3-22
7.3.1.2.5 Levels 7.3-22
7.3.1.2.6 Range of Transient, Steady State, and Environmental Conditions 7.3-22
7.3.1.2.7 Malfunctions, Accidents, and Other Unusual Events Which Could Cause Damage to Safety System 7.3-23
7.3.1.2.7.1 Floods 7.3-23
7.3.1.2.7.2 Storms and Tornadoes 7.3-23
7.3.1.2.7.3 Earthquakes 7.3-23
7.3.1.2.7.4 Fires 7.3-23
7.3.1.2.7.5 LOCA 7.3-23
7.3.1.2.7.6 Pipe Break Outside Primary Containment 7.3-23
7.3.1.2.7.7 Missiles 7.3-23
7.3.1.2.8 Minimum Performance Requirements 7.3-23
7.3.1.3 Final System Drawings 7.3-24
7.3.2 ANALYSIS 7.3-24
7.3.2.1 Engineered Safety Feature Systems - Instrumentation and Controls 7.3-24
7.3.2.1.1 Conformance to 10 CFR 50 Appendix A 7.3-24
7.3.2.1.2 Conformance to IEEE Standards 7.3-25
7.3.2.1.3 Conformance to Regulatory Guides 7.3-29

7.4 SYSTEMS REQUIRED FOR SAFE SHUTDOWN 7.4-1
7.4.1 DESCRIPTION 7.4-1
7.4.1.1 Reactor Core Isolation Cooling System 7.4-1
7.4.1.1.1 Function 7.4-1
7.4.1.1.2 Operation 7.4-2
7.4.1.2 Standby Liquid Control System 7.4-5
7.4.1.2.1 Function 7.4-5
7.4.1.2.2 Operation 7.4-6
7.4.1.3 Residual Heat Removal System/Shutdown Cooling Mode 7.4-6
7.4.1.3.1 Function 7.4-6

Chapter 7

INSTRUMENTATION AND CONTROL SYSTEMS

TABLE OF CONTENTS (Continued)

Section — Page

7.4.1.3.2 Operation 7.4-6
7.4.1.4 Remote Shutdown Systems 7.4-7
7.4.1.4.1 Function 7.4-7
7.4.1.4.2 Operation 7.4-7
7.4.1.5 Anticipated Transient Without Scram - Recirculation Pump Trip 7.4-9
7.4.1.5.1 Function 7.4-9
7.4.1.5.2 Operation 7.4-9
7.4.1.6 Anticipated Transient Without Scram - Alternate Rod Insertion 7.4-9
7.4.1.6.1 Function 7.4-9
7.4.1.6.2 Operation 7.4-9
7.4.1.7 Design Basis 7.4-10
7.4.1.7.1 Variables Monitored to Provide Protective Actions 7.4-10
7.4.1.7.2 Location and Minimum Number of Sensors 7.4-10
7.4.1.7.3 Prudent Operational Limits 7.4-10
7.4.1.7.4 Margin 7.4-10
7.4.1.7.5 Levels 7.4-10
7.4.1.7.6 Range of Transient, Steady State, and Environmental Conditions 7.4-11
7.4.1.7.7 Malfunctions, Accidents, and Other Unusual Events Which Could Cause Damage to Safety Systems 7.4-11
7.4.1.7.7.1 Floods 7.4-11
7.4.1.7.7.2 Storms and Tornadoes 7.4-11
7.4.1.7.7.3 Earthquakes 7.4-11
7.4.1.7.7.4 Fires 7.4-11
7.4.1.7.7.5 Loss-of-Coolant Accident 7.4-12
7.4.1.7.7.6 Pipe Break Outside Primary Containment 7.4-12
7.4.1.7.7.7 Missiles 7.4-12
7.4.1.7.8 Minimum Performance Requirements 7.4-12
7.4.1.8 Final System Drawings 7.4-12
7.4.2 ANALYSIS 7.4-12
7.4.2.1 Conformance to 10 CFR 50 Appendix A, General Design Criteria 7.4-12
7.4.2.2 Conformance to IEEE Standards 7.4-13
7.4.2.3 Regulatory Guides Conformance 7.4-18
7.4.3 REFERENCES 7.4-19

Chapter 7

INSTRUMENTATION AND CONTROL SYSTEMS

TABLE OF CONTENTS (Continued)

Section — Page

7.5 SAFETY-RELATED DISPLAY INSTRUMENTATION 7.5-1
7.5.1 SUMMARY DESCRIPTION 7.5-1
7.5.1.1 General 7.5-1
7.5.1.1.1 Reactor Water Level 7.5-1
7.5.1.1.2 Reactor Pressure 7.5-2
7.5.1.2 Reactor Shutdown Indication 7.5-2
7.5.1.3 Primary Containment and Reactor Vessel Isolation Indication 7.5-3
7.5.1.4 Emergency Core Cooling System and Reactor Core Isolation Cooling Indication 7.5-3
7.5.1.5 Containment Indications 7.5-4
7.5.1.5.1 Primary Containment Pressure Monitoring 7.5-4
7.5.1.5.2 Primary Containment Temperature 7.5-4
7.5.1.5.3 Primary Containment Radiation 7.5-5
7.5.1.5.4 Primary Containment Hydrogen and Oxygen Concentration 7.5-6
7.5.1.5.5 Suppression Chamber Pressure 7.5-6
7.5.1.5.6 Suppression Pool Temperature Monitoring 7.5-6
7.5.1.5.7 Suppression Pool Water Level Monitoring 7.5-6
7.5.1.6 Monitoring for Radioactive Release to the Environment 7.5-7
7.5.1.6.1 Building Effluent Gas Monitors 7.5-7
7.5.1.6.2 Meteorological Conditions 7.5-7
7.5.1.7 Radiation Exposure (Postaccident) 7.5-7
7.5.1.8 Postaccident Sampling System 7.5-8
7.5.1.9 Primary System Relief Valve Position Indication 7.5-8
7.5.1.10 Power Supply Status Monitoring 7.5-8
7.5.1.11 Primary Water Source Indication 7.5-8
7.5.1.12 Residual Heat Removal System 7.5-8
7.5.1.13 Standby Liquid Control System 7.5-9
7.5.1.14 DELETED 7.5-9
7.5.1.15 High Levels in Radioactive Liquid Tanks 7.5-9
7.5.1.16 Emergency Ventilation Damper Position Indication 7.5-9
7.5.1.17 Standby Service Water System 7.5-9
7.5.1.18 Spent Fuel Pool Cooling System 7.5-9
7.5.1.19 Main Control Room Heating, Ventilating, and Air Conditioning 7.5-9
7.5.1.20 Standby Gas Treatment System 7.5-9
7.5.1.21 Containment Instrument Air 7.5-10

Chapter 7

INSTRUMENTATION AND CONTROL SYSTEMS

TABLE OF CONTENTS (Continued)

Section Page

7.5.1.22 Safety Parameter Display 7.5-10
7.5.1.22.1 Description 7.5-10
7.5.1.22.2 Conformance to NUREG-0696 ..... 7.5-10
7.5.2 ANALYSIS AND DESIGN BASIS 7.5-11
7.5.2.1 Design Basis 7.5-11
7.5.2.2 Analysis 7.5-13
7.5.2.2.1 Conformance To 10 CFR 50 Appendix A, General Design Criteria 7.5-14
7.5.2.2.2 Conformance To IEEE Standards 7.5-14
7.5.2.2.2.1 IEEE Standard 279-1971, Criteria for Protection Systems for Nuclear Power Generating Stations 7.5-14
7.5.2.2.2.2 IEEE Standard 323-1974, Standard for Qualifying Class 1E Equipment for Nuclear Power Generating Stations 7.5-17
7.5.2.2.3 Regulatory Guide Conformance 7.5-17
7.5.3 REFERENCES 7.5-30

7.6 ALL OTHER INSTRUMENTATION SYSTEMS REQUIRED FOR SAFETY 7.6-1
7.6.1 DESCRIPTION 7.6-1
7.6.1.1 Process Radiation Monitoring System 7.6-1
7.6.1.2 High-Pressure/Low-Pressure Systems Interlocks and Alarms 7.6-1
7.6.1.2.1 Function 7.6-1
7.6.1.2.2 Operation 7.6-1
7.6.1.3 Leak Detection System 7.6-2
7.6.1.3.1 Function 7.6-3
7.6.1.3.2 Operation 7.6-3
7.6.1.3.3 Main Steam Line Leak Detection 7.6-4
7.6.1.3.4 Reactor Core Isolation Cooling System Leak Detection 7.6-4
7.6.1.3.4.1 Reactor Core Isolation Cooling Area Temperature Monitoring 7.6-4
7.6.1.3.4.2 Reactor Core Isolation Cooling Steam Flow Rate Monitoring 7.6-5
7.6.1.3.4.3 Reactor Core Isolation Cooling Turbine Exhaust Diaphragm Pressure Monitoring 7.6-5
7.6.1.3.4.4 Reactor Core Isolation Cooling Pressure Monitoring 7.6-5
7.6.1.3.5 Residual Heat Removal System Leak Detection 7.6-5
7.6.1.3.5.1 Residual Heat Removal Area Temperature Monitoring 7.6-6
7.6.1.3.5.2 Residual Heat Removal Flow Rate Monitoring 7.6-6

Chapter 7

INSTRUMENTATION AND CONTROL SYSTEMS

TABLE OF CONTENTS (Continued)

Section Page

7.6.1.3.6 Reactor Water Cleanup System Leak Detection 7.6-6
7.6.1.3.6.1 Reactor Water Cleanup Differential Flow Monitoring 7.6-7
7.6.1.3.6.2 Reactor Water Cleanup Area Temperature Monitoring 7.6-7
7.6.1.3.6.3 Condenser Blowdown Line Flow Monitoring 7.6-7
7.6.1.3.7 Drywell Floor Drain Leak Detection 7.6-7
7.6.1.3.8 Drywell Equipment Drain Leak Detection 7.6-7
7.6.1.3.9 Reactor Building Floor Drain and Equipment Drain Sumps Leak Detection 7.6-8
7.6.1.3.10 Emergency Core Cooling Systems Pump Room Flooding Detection 7.6-8
7.6.1.3.11 Drywell Atmosphere Radiation Monitoring System 7.6-8
7.6.1.3.12 Auxiliary Steam Line Leak Detection 7.6-9
7.6.1.4 Neutron Monitoring System 7.6-9
7.6.1.4.1 Intermediate Range Monitor 7.6-9
7.6.1.4.1.1 Function 7.6-9
7.6.1.4.1.2 Operation 7.6-9
7.6.1.4.2 Local Power Range Monitor 7.6.10
7.6.1.4.2.1 Function 7.6-10
7.6.1.4.2.2 Operation 7.6-10
7.6.1.4.3 Average Power Range Monitor 7.6-12
7.6.1.4.3.1 Function 7.6-12
7.6.1.4.3.2 Operation 7.6-12
7.6.1.4.4 Oscillation Power Range Monitor 7.6-13
7.6.1.4.4.1 Function 7.6-13
7.6.1.4.4.2 Operation 7.6-13
7.6.1.5 Recirculation Pump Trip System 7.6-15
7.6.1.5.1 Function 7.6-15
7.6.1.5.2 Operation 7.6-15
7.6.1.5.2.1 Bypasses and Interlocks 7.6-16
7.6.1.5.2.2 Redundancy 7.6-17
7.6.1.5.2.3 Testability 7.6-17
7.6.1.5.2.4 Environmental Considerations 7.6-17
7.6.1.5.2.5 Operational Considerations 7.6-17
7.6.1.6 Spent Fuel Pool Cooling and Cleanup System 7.6-17
7.6.1.6.1 Function 7.6-17
7.6.1.6.2 Operation 7.6-18

Chapter 7

INSTRUMENTATION AND CONTROL SYSTEMS

TABLE OF CONTENTS (Continued)

Section — Page

7.6.1.7 Suppression Pool Temperature Monitoring System 7.6-18
7.6.1.7.1 Function 7.6-18
7.6.1.7.2 Operation 7.6-18
7.6.1.8 Design Basis 7.6-19
7.6.1.8.1 Variables Monitored to Provide Protective Actions 7.6-19
7.6.1.8.2 Location and Minimum Number of Sensors 7.6-20
7.6.1.8.3 Prudent Operational Limits 7.6-20
7.6.1.8.4 Margin 7.6-21
7.6.1.8.5 Levels 7.6-21
7.6.1.8.6 Range of Transient, Steady State, and Environmental Conditions 7.6-21
7.6.1.8.7 Malfunctions, Accidents, and Other Unusual Events Which Could Cause Damage to Safety Systems 7.6-21
7.6.1.8.7.1 Floods 7.6-21
7.6.1.8.7.2 Storms and Tornadoes 7.6-21
7.6.1.8.7.3 Earthquakes 7.6-21
7.6.1.8.7.4 Fires 7.6-22
7.6.1.8.7.5 Loss-of-Coolant Accident 7.6-22
7.6.1.8.7.6 Pipe Break Outside Containment 7.6-22
7.6.1.8.7.7 Missiles 7.6-22
7.6.1.8.8 Minimum Performance Requirements 7.6-22
7.6.1.9 Final System Drawings 7.6-22
7.6.2 ANALYSIS 7.6-22
7.6.2.1 Safety-Related Systems - Instrumentation and Controls 7.6-22
7.6.2.2 Conformance to 10 CFR 50, Appendix A - General Design Criteria 7.6-23
7.6.2.3 Conformance to IEEE Standards 7.6-23
7.6.2.4 Conformance to Regulatory Guides 7.6-28
7.6.3 REFERENCES 7.6-31

7.7 CONTROL SYSTEMS NOT REQUIRED FOR SAFETY 7.7-1
7.7.1 DESCRIPTION 7.7-1
7.7.1.1 Reactor Vessel 7.7-1
7.7.1.1.1 Function 7.7-2
7.7.1.1.2 Operation 7.7-2
7.7.1.1.2.1 Reactor Vessel Temperature 7.7-2
7.7.1.1.2.2 Reactor Vessel Water Level 7.7-2
7.7.1.1.2.3 Reactor Core Hydraulics 7.7-3

Chapter 7

INSTRUMENTATION AND CONTROL SYSTEMS

TABLE OF CONTENTS (Continued)

Section — Page

7.7.1.1.2.4 Reactor Vessel Pressure 7.7-3
7.7.1.2 Reactor Manual Control System 7.7-4
7.7.1.2.1 Function 7.7-4
7.7.1.2.2 Operation 7.7-4
7.7.1.2.2.1 Rod Drive Control System 7.7-4
7.7.1.2.2.2 Rod Block Trip System 7.7-7
7.7.1.2.2.3 Rod Position Probes 7.7-12
7.7.1.2.2.4 Position Indication Electronics 7.7-12
7.7.1.3 Recirculation Flow Control System 7.7-14
7.7.1.3.1 Function 7.7-14
7.7.1.3.2 Operation 7.7-15
7.7.1.4 Feedwater Control System 7.7-19
7.7.1.4.1 Function 7.7-19
7.7.1.4.2 Operation 7.7-19
7.7.1.4.2.1 Reactor Vessel Water Level 7.7-20
7.7.1.4.2.2 Main Steam Line Steam Flow 7.7-20
7.7.1.4.2.3 Feedwater Flow 7.7-20
7.7.1.5 Digital Electro-Hydraulic Control System 7.7-21
7.7.1.5.1 Function 7.7-21
7.7.1.5.2 Operation 7.7-22
7.7.1.5.2.1 Steam Pressure Control 7.7-22
7.7.1.5.2.2 Steam Bypass System 7.7-23
7.7.1.5.2.3 Turbine Control System Variables 7.7-23
7.7.1.5.2.4 Turbine Speed-Load Control Interfaces 7.7-24
7.7.1.6 Neutron Monitoring System - Traversing In-Core Probe 7.7-28
7.7.1.6.1 Function 7.7-28
7.7.1.6.2 Operation 7.7-29
7.7.1.7 Neutron Monitoring System - Source Range Monitor 7.7-30
7.7.1.7.1 Function 7.7-30
7.7.1.7.2 Operation 7.7-30
7.7.1.8 Neutron Monitoring System - Rod Block Monitor 7.7-31
7.7.1.8.1 Function 7.7-31
7.7.1.8.2 Operation 7.7-31
7.7.1.9 Process Computer System 7.7-32
7.7.1.9.1 Function 7.7-32
7.7.1.9.2 Operation 7.7-33

INSTRUMENTATION AND CONTROL SYSTEMS

TABLE OF CONTENTS (Continued)

Section — Page

7.7.1.10 Rod Worth Minimizer Function 7.7-34
7.7.1.10.1 Function 7.7-34
7.7.1.10.2 Operation 7.7-34
7.7.1.11 DELETED
7.7-36 Through 7.7-39 ..... 7.7-39
7.7.1.12 Loose Parts Detection System 7.7-39
7.7.1.13 Refueling Interlocks 7.7-39
7.7.1.13.1 Function 7.7-39
7.7.1.13.2 Operation 7.7-39
7.7.1.14 Safety/Relief Valves - Relief Function 7.7-41
7.7.1.14.1 Function 7.7-41
7.7.1.14.2 Operation 7.7-42
7.7.1.15 Transient Data Acquisition System 7.7-42
7.7.1.15.1 Function 7.7-42
7.7.1.15.2 Description 7.7-43
7.7.1.15.3 Operation 7.7-43
7.7.1.15.4 Conformance to NRC Regulatory Guides 7.7-44
7.7.1.15.4.1 Regulatory Guide 1.75, Revision 2, Physical Independence of Electric Systems 7.7-44
7.7.1.15.4.2 NUREG-0737, Supplement 1, Clarification of TMI Action Plan Requirements: Requirements for Emergency Response Capabilities .. 7.7-45
7.7.1.16 Design Differences 7.7-45
7.7.2 ANALYSIS 7.7-45

Chapter 7

INSTRUMENTATION AND CONTROL SYSTEMS

LIST OF TABLES

Number		Page
7.1-1	Design and Supply Responsibility of Safety-Related and Safe Shutdown Systems	7.1-13
7.1-2	*Safety-Related Systems Similarity to Licensed Reactors*	*7.1-15*
7.1-3	Codes and Standards Applicability Matrix	7.1-17
7.2-1	Reactor Protection System Instrumentation	7.2-23
7.3-1	High Pressure Core Spray System Instrumentation	7.3-31
7.3-2	Automatic Depressurization System Instrumentation	7.3-32
7.3-3	Low-Pressure Core Spray System Instrumentation	7.3-33
7.3-4	Low-Pressure Coolant Injection Instrumentation	7.3-34
7.3-5	Primary Containment and Reactor Vessel Isolation Control System Instrumentation	7.3-35
7.3-6	DELETED	7.3-37
7.3-7	Residual Heat Removal System - Containment Spray Cooling Mode System Instrumentation	7.3-38
7.3-8	Residual Heat Removal System - Suppression Pool Cooling Mode System Instrumentation	7.3-39
7.3-9	Standby Service Water System Instrumentation	7.3-40
7.3-10	Main Control Room and Critical Switchgear Room HVAC System Instrumentation	7.3-41
7.3-11	Standby Gas Treatment System Instrumentation	7.3-42
7.3-12	Reactor Building Ventilation and Pressure Controller System Instrumentation	7.3-43

Chapter 7

INSTRUMENTATION AND CONTROL SYSTEMS

LIST OF TABLES (Continued)

Number	Title	Page
7.3-13	Containment Instrument Air System Instrumentation	7.3-44
7.3-14	DELETED	7.3-45
7.4-1	Reactor Core Isolation Cooling System Instrumentation	7.4-21
7.4-2	ATWS-Recirculation Pump Trip System Instrumentation	7.4-22
7.4-3	ATWS-Alternate Rod Insertion System Instrumentation	7.4-23
7.5-1	Safety-Related Display Instrumentation	7.5-33
7.6-1	High to Low Pressure System Interlocks Instrumentation	7.6-33
7.6-2	Leak Detection System Instrumentation	7.6-34
7.6-3	LPRM System Trips	7.6-38
7.6-4	Recirculation System Trip Functions	7.6-39
7.6-5	Spent Fuel Pool Cooling and Cleanup System Instrumentation Specifications	7.6-40
7.6-6	Channels Required for Protective Action Completion for the Spent Fuel Pool Cooling and Cleanup System	7.6-41
7.6-7	Suppression Pool Temperature Monitoring Instrumentation	7.6-42
7.7-1	Design and Supply Responsibility of Plant Control Systems	7.7-47
7.7-2	Similarity to Licensed Reactors	7.7-48
7.7-3	Refueling Interlocks	7.7-49

Chapter 7

INSTRUMENTATION AND CONTROL SYSTEMS

LIST OF FIGURES

Number	Title
7.2-1	Reactor Protection System - IED (Sheets 1 through 4)
7.2-2	Reactor Protection System Scram Functions
7.2-3	Arrangement of RPS Sensor Trip Channels and Trip Logics
7.2-4	Arrangement of Actuators and Actuator Logics
7.2-5	Trip Logics in One Trip System (Schematic)
7.2-6	Relationships Between Neutron Monitoring System and Reactor Protection System
7.2-7	Configuration for Turbine Stop Valve Closure Reactor Trip
7.2-8	Process Radiation Monitoring System (Recombiner/Charcoal Bed) - IED (Sheets 1 through 3)
7.2-9	Configuration for Main Steam Line Isolation Reactor Trip
7.2-10	LPRM Channel Arrangement in the Core and APRM Channel Assignments (Sheets 1 and 2)
7.2-11	Block Diagram - RPS Protective Circuit - Electrical Protection Assembly (EPA)
7.3-1	Reactor Water Cleanup System
7.3-2	Isolation Control System for Main Steam Line Isolation Valves
7.3-3	Isolation Control System Using Motor-Operated Valves
7.3-4	High-Pressure Core Spray Power Supply System - FCD (Sheets 1 through 3)
7.3-5	Initiation Logic - ADS, SPCS, LPCI A
7.3-6	Initiation Logic - LPCI B and C, HPCS, RCIC

Chapter 7

INSTRUMENTATION AND CONTROL SYSTEMS

LIST OF FIGURES (Continued)

Number	Title
7.3-7	High-Pressure Core Spray System - FCD (Sheets 1 through 3)
7.3-8	Nuclear Boiler System - FCD (Sheets 1 through 5)
7.3-9	Low-Pressure Core Spray System - FCD (Sheets 1 and 2)
7.3-10	Residual Heat Removal System - FCD (Sheets 1 through 5)
7.3-11	DELETED
7.3-12	Control Logic Diagram - Standby Service Water System (Sheets 1 through 19)
7.3-13	Control Logic Diagram - HVAC - Main Control Room and Critical Switchgear/Filter Runout Alarm (Sheets 1 through 11)
7.3-14	Control Logic Diagram - Standby Gas Treatment System (Sheets 1 through 10)
7.3-15	Control Logic Diagram - Primary Containment Instrument Air (Sheets 1 through 10)
7.4-1	Reactor Core Isolation Cooling System - FCD (Sheets 1 through 5)
7.4-2	Standby Liquid Control System - FCD
7.4-3	Recirculation Pump Trip (ATWS-RPT) Logic
7.4-4	ATWS-ARI Control Rod Drive, CRD-V-24A, 25A, 26A, 27A, and 28
7.4-5	ATWS-ARI Control Rod Drive, CRD-V-24B, 25B, 26B, and 27B
7.4-6	Remote Shutdown System (Sheets 1 and 2)
7.6-1	Leak Detection System (Sheets 1 and 2)
7.6-2	ECCS Pump Rooms Water Level Detection Control Logic Diagram

Chapter 7

INSTRUMENTATION AND CONTROL SYSTEMS

LIST OF FIGURES (Continued)

Number	Title
7.6-3	Neutron Monitoring System - FCD (Sheets 1 through 7)
7.6-4	Ranges of Neutron Monitoring System
7.6-5	SRM/IRM Neutron Monitoring Unit
7.6-6	Detector Drive System Schematic
7.6-7	Functional Block Diagram - IRM Channel
7.6-8	Vessel Penetrations for Nuclear Instrumentation
7.6-9	Power Range Monitor Detector Assembly Location
7.6-10	Neutron Monitoring System - IED (Sheets 1 and 2)
7.6-11	APRM Circuit Arrangement for Reactor Protection System Input
7.6-12	Recirculation Pump Trip Logic Diagram
7.6-13	Recirculation Pump Trip System A
7.6-14	Turbine Governor Valve Fast Closure Sensors
7.6-15	Turbine Stop Valve Sensors
7.6-16	Control Logic Diagram - Fuel Pool Cooling and Cleanup
7.6-17	Control Logic Diagram - Fuel Pool Circulation Pump (FPC-P-1A)
7.6-18	Control Logic Diagram - Fuel Pool Circulation Pump (FPC-P-1B)
7.6-19	Control Logic Diagram - Makeup Water Skimmer Surge Tank (Fuel Pool)
7.6-20	Control Logic Diagram - Fuel Pool Filter Demineralizer Bypass (Division 1)

Chapter 7

INSTRUMENTATION AND CONTROL SYSTEMS

LIST OF FIGURES (Continued)

Number	Title
7.6-21	Control Logic Diagram - Fuel Pool Cooling Motor-Operated Valve
7.6-22	Control Logic Diagram - Fuel Pool Cooling Loop Isolation (Division 1)
7.6-23	Control Logic Diagram - Fuel Pool Cooling Loop Isolation (Division 2)
7.6-24	Control Logic Diagram - Fuel Pool Filter Demineralizer Bypass (Division 2)
7.6-25	Control Logic Diagram - Fuel Pool Cooling and Cleanup
7.6-26	BISI Logic Diagram - Fuel Pool Cooling and Cleanup System
7.7-1	Water Level Range Definition
7.7-2	Control Rod Drive Hydraulic System - FCD (Sheets 1 through 7)
7.7-3	Reactor Manual Control System (Sheets 1 and 2)
7.7-4	Reactor Manual Control Operational Modes (Sheet 1) and Reactor Manual Control System Operation (Sheet 2)
7.7-5	Eleven-Wire Position Probe
7.7-6	Simplified NSSS Control Schemes (RRS-ASD Flow Control Scheme)
7.7-7	RFCS Simplified Control Logic Block Diagram
7.7-8	Feedwater Control System - IED
7.7-9	Simplified Diagram of Turbine Pressure and Speed/Load Control
7.7-10	Functional Block Diagram - SRM Channel
7.7-11	Traversing In-Core Probe Assembly

Chapter 7

INSTRUMENTATION AND CONTROL SYSTEMS

LIST OF FIGURES (Continued)

Number	Title
7.7-12	Assignment of LPRM Input to RBM System
7.7-13	RBM Response to Control Rod Motion (Channels A and C)
7.7-14	RBM Response to Control Rod Motion (Channels B and D)
7.7-15	DELETED
7.7-16	TDAS/PPCRS/PDIS Configuration
7.7-17	Power Dependent RBM Trip Setpoints

Chapter 7

INSTRUMENTATION AND CONTROL SYSTEMS

7.1 INTRODUCTION

Chapter 7 presents design and performance information for instrumentation and control (I&C) of safety-related and major plant control systems used throughout the plant. The design and performance considerations of these systems, safety function, and their mechanical aspects are described in other chapters.

7.1.1 IDENTIFICATION OF SAFETY-RELATED SYSTEMS

The systems are classified according to Regulatory Guide 1.70, Revision 2. Table 7.1-1 lists safety-related and safe shutdown systems and identifies the designer and/or the supplier. Other control systems are listed in Table 7.7-1. Table 7.1-2 identifies I&C systems that are identical to those of a nuclear power plant of similar design that received NRC design or operation approval through the issuance of either a construction permit or an operating license.

The following is a brief description of reactor protection (trip) system (RPS), engineered safety feature systems, safe shutdown systems, safety-related display instrumentation and other systems required for safety.

7.1.1.1 Reactor Protection System

The I&C initiate reactor shutdown via automatic control rods insertion (scram) if selected variables exceed preestablished limits. This action prevents fuel damage, limits nuclear system pressure, and restricts the release of radioactive material.

7.1.1.2 Primary Containment and Reactor Vessel Isolation Control System

The I&C initiate automatic closure of various reactor pressure boundary and primary containment isolation valves if monitored system variables exceed preestablished limits. This action limits the loss of coolant from the reactor coolant pressure boundary (RCPB) and the release of radioactive materials from either the RCPB or the primary containment.

7.1.1.3 Emergency Core Cooling System

The I&C provide automatic initiation and control of specific core cooling systems, namely, high-pressure core spray (HPCS) system, automatic depressurization system (ADS), low-pressure core spray (LPCS) system, and the low-pressure coolant injection (LPCI) system. This provides adequate core cooling following a loss-of-coolant accident (LOCA) to prevent fuel cladding failure from excessive temperatures.

7.1.1.4 Neutron Monitoring System

The I&C use in-core neutron detectors to monitor core neutron flux. The neutron monitoring system (NMS) provides signals to the RPS trip logic to scram the reactor. Average neutron flux or average simulated thermal power is measured by the average power range monitors (APRM) and is used as the overpower indicator during power operation. Intermediate range monitors (IRM) are used as power indicators during startup and shutdown. The NMS also provides power level indication during all modes of operation.

Also included within NMS is the Oscillation Power Range Monitor (OPRM), which is used to detect thermal hydraulic oscillations.

7.1.1.5 Process Radiation Monitoring System

Radiation monitors are provided on process lines to monitor/detect and provide trip signals to limit the release of radiation:

a. Main steam line radiation monitors,
b. Reactor building exhaust radiation monitors, and
c. Standby service water radiation monitors.

7.1.1.6 Main Control Room and Critical Switchgear Rooms Heating, Ventilating, and Air Conditioning System

In the event of an F, A, or Z signal, the normal control room fresh air intake valves close. The signal energizes the control room emergency filtration units which divert air through the filters to pressurize the main control room. The main control room kitchen exhaust fan and its isolation damper are also shut off by the F, A, Z signals.

7.1.1.7 Standby Service Water System

The I&C automatically initiate cooling water flow to vital equipment during abnormal plant conditions.

7.1.1.8 Containment Atmosphere Control System

The I&C monitor the concentration of hydrogen and oxygen gas present in the primary containment during and after a postulated LOCA.

7.1.1.9 Reactor Core Isolation Cooling System

The I&C provide makeup water to the reactor vessel in the event the reactor becomes isolated accompanied by a loss of flow from the reactor feedwater system during normal plant operation or plant transients.

7.1.1.10 Standby Liquid Control System

The I&C in conjunction with manual initiation provide a redundant reactivity control system that can shut the reactor down from rated power to the cold condition in the event that all withdrawn control rods cannot be inserted manually by the reactor manual control system to achieve reactor shutdown.

7.1.1.11 Leak Detection System

The I&C provide various temperature, pressure, level, and flow sensors to detect, annunciate, and isolate (in certain cases) water and steam leakage paths in selected reactor systems.

7.1.1.12 Residual Heat Removal System - Shutdown Cooling Modes

The I&C in conjunction with manual initiation of either the normal or alternate shutdown provide cooling to remove decay and sensible heat from the reactor vessel so that the reactor can be refueled and serviced.

7.1.1.13 Fuel Pool Cooling and Cleanup System

The I&C monitor fuel pool water temperature.

7.1.1.14 Suppression Pool Temperature Monitoring System

The I&C are provided to determine when special operating procedures are required to avoid elevated suppression pool temperatures.

7.1.1.15 Standby Gas Treatment System

The I&C control standby gas treatment (SGT) system operation during abnormal conditions to limit radioactive material releases.

7.1.1.16 (DELETED)

7.1.1.17 Safety-Related Display Instrumentation

The I&C provide information to the reactor operators to support manual safety actions or to allow assessment of safety system status.

7.1.1.18 Containment Instrument Air System

The I&C provide uninterruptable instrument air or nitrogen to essential ADS valve accumulators inside primary containment.

7.1.1.19 Residual Heat Removal System - Containment Spray Cooling Mode

The I&C provide for the manual initiation of the residual heat removal (RHR) system subsystem that condenses steam in the drywell and suppression chamber following a LOCA. The drywell sprays (with or without the RHR heat exchangers) may be used to remove airborne radioactivity from the containment atmosphere in response to a LOCA.

7.1.1.20 Remote Shutdown System

The I&C provide the capability for safe shutdown of the reactor in the event the main control room becomes uninhabitable.

7.1.1.21 Recirculation Pump Trip

The I&C are provided to supplement plant shutdown at the end of a fuel cycle when control rod worths are reduced by core nuclear characteristics.

7.1.1.22 Residual Heat Removal System - Suppression Pool Cooling Mode

The I&C in conjunction with the suppression pool temperature monitor provides information to the reactor operators to support manual initiation of this subsystem of the RHR system that cools the suppression pool water to avoid elevated pool temperatures.

7.1.1.23 Anticipated Transient Without Scram Recirculation Pump Trip

The I&C trip the reactor recirculation pump motors in the event of an anticipated transient without scram (ATWS).

7.1.1.24 Anticipated Transient Without Scram - Alternate Rod Insertion

The I&C provide an alternative method of inserting the control rods in the event of an ATWS.

7.1.2 IDENTIFICATION OF SAFETY CRITERIA

The I&C equipment design is based on the need to have the system perform its intended function while meeting the requirements of applicable general design criteria (GDC), regulatory guides, industry standards, and other documents. See Sections 7.2 through 7.6 for a discussion of the design bases for each safety-related system.

7.1.2.1 Regulatory Requirements

The plant safety-related systems have been examined with respect to specific regulatory requirements that are applicable to the instrument and controls of these systems. The specific regulatory requirements pertaining to each system's I&C is specified in Table 7.1-3. For a discussion of the degree of conformance see the individual systems analysis portions in Sections 7.1 through 7.6.

7.1.2.2 Regulatory Conformance - 10 CFR 50 Appendix A

Section 3.1 provides a discussion of those GDC that apply equally to all safety-related, safe shutdown, and augmented quality systems described in this chapter and include GDC 1, 2, 3, 4, 10, 13, 54, 55, and 56. Those GDC which do not apply equally to all safety-related, safe shutdown, and augmented quality systems are discussed for each system in the analysis portion of Sections 7.2 through 7.6.

7.1.2.3 Conformance to Institute of Electrical and Electronics Engineers Standards

The following is a discussion of those IEEE Standards which apply equally to all safety-related systems described in this chapter. Those IEEE Standards which do not apply equally to all safety-related systems are discussed for each system in the analysis portion of Sections 7.2 through 7.6:

IEEE 308-1974 - Class IE Power Systems for Nuclear Power Generating Stations

IEEE 308-1974 is described in Section 8.3.

IEEE 317-1972 - Electric Penetration Assemblies in Containment Structures*

All containment electrical penetration assemblies used for circuits routed into primary containment are designed to withstand, without loss of containment integrity, the maximum postulated overcurrent vs. time conditions, assuming a single failure of the circuit primary

*For the replacement of the electrical penetration modules, use the version of IEEE 317 that is in effect at the time of purchase and documented in the design specifications.

overcurrent protection apparatus. See also Sections 1.8 (Regulatory Guide 1.63), 3.8.6, and 8.1.5.2.

IEEE 323-1971 - Qualifying Class 1E Equipment for Nuclear Power Generating Stations

Written procedures and responsibilities are developed for the design and qualification of all Class 1 electric equipment. This includes preparation of specifications, qualification procedures, and documentation. Qualification testing or analysis is accomplished prior to release of the engineering design for production. Standards manuals are maintained containing specifications, practices, and procedures for implementing qualification requirements, and an auditable file of qualification documents is available for review. See Sections 1.8.2, 1.8.3, 3.10 and 3.11 for a description of conformance to IEEE 323. NUREG 0588-Category II invokes IEEE-323-1971 with additional regulatory positions.

IEEE 336-1971 - Installation, Inspection, and Testing Requirements for Instrumentation and Electric Equipment During the Construction of Nuclear Power Generating Stations

Where applicable, purchase and contract specifications define installation, inspection, and testing requirements for plant I&Cs. See the Energy Northwest Operational Quality Assurance Program Description (OQAPD).

IEEE 338-1975 - Periodic Testing of Nuclear Power Generating Stations

IEEE 338 is presented on a system basis in the analysis portions of Sections 7.2 through 7.6 as part of the discussion of Regulatory Guide 1.22 compliance.

IEEE 344-1971 and 1975 - Seismic Qualification of Class 1E Equipment

Safety-related I&C equipment is classified as Seismic Category I, designed to withstand the effects of the safe shutdown earthquake (SSE) and remain functional during normal and accident conditions. Qualification and documentation procedures used for Seismic Category I equipment and systems are identified in Section 3.10 and Table 3.2-1. Section 3.10.1.2 identifies compliance to these standards and applicable exceptions.

IEEE 379-1972 - Application of Single Failure Criterion to Nuclear Power Generating Stations

The extent to which the single failure criteria of IEEE 379 is satisfied is specifically covered for each system in the analysis of IEEE 279, paragraph 4.2, in Sections 7.2 through 7.6.

IEEE 384-1974 - Independence of Class 1E Equipment and Circuits

The safety-related systems described in Sections 7.2 through 7.6 meet the independence and separation criteria for redundant systems in accordance with IEEE 279, paragraph 4.6.

The electrical power supply, instrumentation, and control wiring for redundant safety-related circuits are physically separated to preserve redundancy and ensure that no single credible event will prevent completion of the protective function. Credible events include but are not limited to the effects of short circuits, pipe rupture, pipe whip, high-pressure jets, missiles, fire, earthquake, and falling objects, and are considered in the basic plant design.

The independence of wiring, tubing, piping, and control devices for safety-related controls and instrumentation is achieved by physical space or barriers between separation groups of the same protective function.

The criteria and bases for the independence of safety-related I&Cs, electrical equipment, cable, cable routing, marking, and cable derating, are discussed in Section 8.3.1.4. Fire detection and protection in the areas where cabling is installed is described in Appendix F.

IEEE 387-1972 - Diesel-Generator Units Applied as Standby Power Supplies for Nuclear Power Generating Stations

Design and qualification testing of the standby power system used to furnish electrical power to safety loads conforms to IEEE 387 to ensure that system requirements for redundancy, single failure criteria, adequate capacity, capability, and reliability are adequately met. The standby power source as an integrated system component satisfies the requirements of IEEE 308 as discussed in Section 8.3. Section 8.3.1.2.2 identifies compliance to these standards and applicable exceptions.

7.1.2.4 Conformance to Regulatory Guides

The following is a discussion of Regulatory Guides which apply to safety-related systems described in this chapter. Unique applications of Regulatory Guides are discussed for each system in the applicable analysis portion of Sections 7.2 through 7.6 and Section 1.8.

Regulatory Guide 1.11 (March 1971)

All instrument lines that penetrate the primary containment vessel, which are part of safety-related systems, meet the requirements of Regulatory Position C.1. This is accomplished by redundancy, independence, by allowing for safety system testability, by line orificing or sizing, by including automatic or remote manual (from the control room) line shutoff capability if line integrity is lost, and by a conservative design at the individual penetrations.

All other instrument lines that penetrate the primary containment vessel meet the requirements of Regulatory Position C.2.a by the same factors discussed above.

See Section 6.2.4.3.2.4 for further discussion.

Regulatory Guide 1.22

Lifting of leads and/or removal of fuses is required to perform a number of surveillance tests. Surveillance tests for which lifting of leads and/or removal of fuses is required fall into the following categories: (1) tests for thermocouples, (2) tests requiring introduction of test equipment into the instrument channel, (3) tests that otherwise would be unreasonably complex, (4) tests which must be performed before entering the mode in which normally testable, and (5) tests on systems or components for which the configuration permits no reasonable alternative.

Plant procedures for these surveillance tests include instructions explicitly requiring the reconnecting of the lifted leads and/or replacement of fuses. Restoration is documented and verified in accordance with guidance provided in Information Notice 84-37.

Regulatory Guide 1.29 (September 1978)

All safety-related I&C equipment is classified as Seismic Category I, designed to withstand the effects of the SSE and remain functional during normal and accident conditions. Qualification and documentation procedures used for Seismic Category I equipment and systems are identified in Section 3.10 and Table 3.2-1.

Regulatory Guide 1.30 (August 11, 1972)

The quality assurance requirements of IEEE 336-1971 (see Section 7.1.2.3 discussion above) were applicable during the plant design and construction phases and implemented as an operational quality assurance program during plant operation in response to Regulatory Guide 1.30. The specific requirements of Regulatory Guide 1.30 are met as discussed in the OQAPD.

Regulatory Guide 1.40 (March 16, 1973)

The containment recirculation and head area return fans have been qualified for use in containment in accordance with IEEE 334-1974. Qualification testing was successfully performed on a prototype fan for motor heat aging, fan resonant search, vibration endurance, and LOCA simulation. Recirculation and head area return fans will be used as the hydrogen mixing system in the event of a LOCA. See also Section 9.4.11.3.

Regulatory Guide 1.47 (1973)

Each safety-related system described in Sections 7.2, 7.3, 7.4, and 7.6 is provided with an automatically or operator initiated system level bypass and inoperability annunciator. Each system level annunciator is located on the panel containing the controls for the specific system.

In addition to system level annunciation, component level indicators are provided near the system lever annunciator to indicate the cause of the system bypass or inoperability.

A switch is provided for manual actuation of each system level annunciator to allow display of those bypass or inoperable conditions which are expected to occur at a frequency less than once per year and are not automatically indicated.

Typically, the following bypasses or inoperabilities cause actuation of system level (and component level) annunciation for the affected system:

a. Pump motor breaker not in operating position,

b. Loss of pump motor control power,

c. Loss of motor-operated valve control power/motive power,

d. Logic power failure,

e. Logic in test,

f. Position of remote-manual valves which do not receive automatic alignment signals, and

g. Bypass or test switches actuated.

The manually induced inoperable or bypass condition of an auxiliary supporting system, typically, also results in the loss of function (immediate or delayed) of another safety-related or important-to-safety system. To ensure that the operators recognize that more than one system may be out-of-service, typically, an inoperable or bypassed auxiliary support system will not only cause actuation of the auxiliary support system, system-level annunciator, but also will cause the actuation of the system-level annunciator of the supported system. The exception to this typical design is the diesel generator system, the battery system, and the standby service water system. For these three systems, an inoperable or bypass condition will not result in the actuation of the supported systems, system-level annunciators. However, component-level indicating lamps will be actuated at each of the supported system locations to alert operators of the auxiliary system out-of-service condition. These three systems are not designed to cascade to all the supported systems since each has its own out-of-service annunciation. This design reduces potential operator confusion and also distraction that may occur during a transient or accident event.

Regulatory Guide 1.63 (October 1973)

All containment electrical penetration assemblies used for circuits routed into primary containment are designed to withstand, without loss of containment integrity, the maximum postulated overcurrent vs. time conditions, assuming a single failure of the circuit primary overcurrent protection apparatus. See also Sections 7.1.2.3 (IEEE 336), 1.8, 3.8.6, and 8.1.5.2.

Regulatory Guide 1.68 (November 1973)

Plant preoperational and initial startup test program requirements are discussed in Section 14.2.7.

Regulatory Guide 1.73 (January 1974)

Auxiliary equipment associated with valve operators are tested in accordance with the requirements of Regulatory Guide 1.73. Design service conditions are implemented in the tests. Conservative values of the environmental variables during and after a design-basis accident are used in the tests to ensure that the testing is carried out under more severe environmental conditions than those expected.

Regulatory Guide 1.75 (January 1974)

Regulatory Guide 1.75 is not applicable to the Columbia Generating Station (CGS) design. However, a complete description of the CGS physical and electrical separation criteria is discussed in Section 8.3.1.4.

Regulatory Guide 1.80 (June 1974)

Plant preoperational testing of instrument air systems is discussed in Sections 14.2.7 and 14.2.12.

Regulatory Guide 1.89 Revision 1 (June 1984)

Regulatory Guide 1.89 Revision 1 is applicable to the CGS design as clarified in Sections 1.8.2 and 1.8.3. Qualification of Class 1E equipment is discussed in Section 3.11.

7.1.2.5 Instrument Errors

The design of each safety-related system considers instrument drift, setability, and repeatability in the selection of I&C in the determination of setpoints. Adequate margin between safety limits and instrument setpoints is provided to allow for instrument error. The allowable values are listed in the Technical Specifications. The Licensee Controlled Specifications (LCS) also

contain information related to instrument setpoint determinations. The amount of instrument error is determined by test and experience. The setpoint is selected based on these known errors. The surveillance frequency is increased on instrumentation that demonstrates a tendency to drift or decreased based on stable performance characteristics.

Table 7.1-1

Design and Supply Responsibility of
Safety-Related and Safe Shutdown Systems

System	GE Design	GE Supply	B&R Design	Others Supply
Reactor Protection Trip	X	X		
Engineered Safety Feature				
Emergency core cooling	X	X		X
High-pressure core spray				
Automatic depressurization				
Low-pressure core spray				
Residual heat removal low pressure coolant injection				
Primary containment and reactor vessel isolation control	X	X	X	X
Process radiation monitoring (portion used for PCRVICS)	X	X	X	X
Standby service water	X	X	X	X
Main control room heating, ventilating, and air conditioning			X	X
Containment atmosphere control			X	X
Reactor building ventilation and pressure control			X	X
Standby gas treatment			X	X
Residual heat removal system containment spray cooling mode	X	X		X
Residual heat removal system suppression pool cooling mode	X	X		
Containment instrument air			X	X
Systems Required for Safe Shutdown				
Reactor core isolation cooling	X	X		
Standby liquid control	X	X		
Residual heat removal system reactor shutdown cooling mode	X	X		
Remote shutdown	X	X	X	X
Safety-Related Display Instrumentation	X	X	X	X

Table 7.1-1

Design and Supply Responsibility of
Safety-Related and Safe Shutdown Systems (Continued)

System	GE Design	GE Supply	B&R Design	Others Supply
All Other				
Leak detection (part of ESF)	X	X	X	X
Process radiation monitoring	X	X	X	X
Neutron monitoring	X	X		
Intermediate range monitor				
Average power range monitor				
Local power range monitor				
Primary containment atmosphere monitoring			X	X
Recirculation pump trip	X	X		
Spent fuel pool cooling and cleanup			X	X
Suppression pool temperature monitoring			X	X

Table 7.1-2

Safety-Related Systems
Similarity to Licensed Reactors

Instrumentation and Controls (System)	*Plants Applying for or Having Construction Permit or Operating License*	*Design*
Reactor protection system	*Zimmer-1*	*Identical*
Primary containment and reactor vessel isolation control system	*Zimmer-1*	*Identical*
Emergency core cooling systems	*Zimmer 1*	*Identical*
Neutron monitoring system	*LaSalle*	*Identical*
Process radiation monitoring system	*Zimmer-1*	*Identical*
Reactor building ventilation and pressure control system	*None*	
Main control room heating, ventilating, and air conditioning system	*None*	
Standby service water system	*None*	
Containment atmosphere control system	*Zimmer-1*	*Identical*
Reactor core isolation cooling system	*Zimmer-1*	*Identical*
Standby liquid control system	*Zimmer-1*	*Identical*
Primary containment atmospheric monitoring system	*None*	
Leak detection system	*None*	
Residual heat removal system - reactor shutdown cooling mode	*Zimmer-1*	*Identical*
Fuel pool cooling and cleanup system	*None*	
Standby gas treatment system	*None*	
Safety-related display instrumentation	*Zimmer-1*	*Identical*
Containment instrument air system	*None*	
Reactor building closed cooling water system	*None*	

Table 7.1-2

Safety-Related Systems
Similarity to Licensed Reactors (Continued)

Instrumentation and Controls (System)	*Plants Applying for or Having Construction Permit or Operating License*	*Design*
Residual heat removal system - containment spray cooling mode	*Zimmer-1*	*Identical*
Remote shutdown system	*Zimmer-1*	*(a)*
Recirculation pump trip	*Zimmer-1*	*Identical*
Residual heat removal system - suppression pool cooling mode	*Zimmer-1*	*Identical*

[a] *The number of valves controlled is slightly different due to differences in the necessary shutdown capability.*

Table 7.1-3

Codes and Standards Applicability Matrix

GDC	RPS	PCRVICS	ECCS	NMS	PROCESS RAD MON.	MAIN CONTROL ROOM HVAC EMERG SWGR RM	SERVICE WATER SYSTEM	RCIC	SLCS	CONTAIN. ATMOS. MON.	LEAK DETEC. SYSTEMS	RHR SHUT-DOWN COOL. MODE	SFPCS	SGTS	MSIVLCS (DEACTI-VATED)	SAFETY-RELATED DISPLAY	RHR CONT. SPRAY COOL MODE	REMOTE SHUT-DOWN	RPT	RHR SUPP. POOL COOL. MODE	ATWS RPT	ATWS ARI
1	X	X	X	X	X	X	X	X	X	X	X	X	X	X	X	X	X	X	X	X	X	X
2	X	X	X	X	X	X	X	X	X	X	X	X	X	X	X	X	X	X	X	X	X	X
3	X	X	X	X	X	X	X	X	X	X	X	X	X	X	X	X	X	X	X	X	X	X
4	X	X	X	X	X	X	X	X	X	X	X	X	X	X	X	X	X	X	X	X	X	X
10	X			X																		
12	X																					
13	X	X	X	X	X	X	X	X	X	X	X	X	X	X	X	X	X	X	X	X	X	X
15	X			X														X				
19	X	X	X	X	X	X	X	X	X	X	X	X	X	X	X	X	X	X	X	X	X	X
20	X			X	X																	
21	X			X	X																	
22	X			X	X																	
23	X			X	X																	
24	X			X	X																	
25	X			X																		
26	X		X						X										X		X	X
28				X																		
29	X			X	X																	
33			X																			
34							X				X	X								X		
35			X				X				X											
37			X				X													X		
38		X	X				X										X			X		
40			X														X			X		
41													X									
43						X							X									
44							X															
46							X															
50																				X		
54		X	X	X					X		X	X			X		X			X		
55		X	X	X				X	X			X			X					X		
56		X	X					X	X			X					X			X		
57																						
60								X						X	X							
61													X	X	X							

Table 7.1-3

Codes and Standards Applicability Matrix (Continued)

	RPS	PCRVICS	ECCS	NMS	PROCESS RAD MON.	MAIN CONTROL ROOM HVAC EMERG SWGR RM	SERVICE WATER SYSTEM	RCIC	SLCS	CONTAIN. ATMOS. MON.	LEAK DETEC. SYSTEMS	RHR SHUT-DOWN COOL. MODE	SFPCS	SGTS	MSIVLCS (DEACTI-VATED)	SAFETY-RELATED DISPLAY	RHR CONT. SPRAY COOL MODE	REMOTE SHUT-DOWN	RPT	RHR SUPP. POOL COOL. MODE	ATWS RPT	ATWS ARI
GDC																						
62													X									
63													X									
64					X																	
IEEE																						
279-1971	X	X	X	X	X	X	X	X	X	X	X	X	X	X	X		X	X	X	X		
323 Note 1	X	X	X	X	X	X	X	X	X	X	X	X	X	X	X		X	X	X	X		
336-1971	X	X	X	X	X	X	X	X	X	X	X	X	X	X	X		X	X	X	X		
338-1975	X	X	X	X	X	X	X	X	X	X	X	X	X	X	X		X	X	X	X		
344 Note 1	X	X	X	X	X	X	X	X	X	X	X	X	X	X	X		X	X	X	X		
379-1972	X	X	X	X	X	X	X	X		X	X	X	X	X	X		X	X	X	X		
384-1974	X	X	X	X	X	X	X	X	X	X	X	X	X	X	X		X	X	X	X		
RG 1.6 3/10/71												X										
RG 1.11 2/17/72	X	X	X					X				X				X				X		
RG 1.22 2/17/72	X	X	X	X	X	X	X	X	X	X	X	X	X	X	X	X	X		X	X		
RG 1.29 9/78	X	X	X	X	X	X	X	X	X	X	X	X	X	X	X		X	X	X	X		
RG 1.30 8/72	X	X	X	X	X	X	X	X	X	X	X	X	X	X	X		X	X	X	X		
RG 1.45 5/73											X				X							
RG 1.47 5/73	X	X	X	X		X	X	X	X	X	X	X	X	X		X	X		X	X		
RG 1.53 6/73	X	X	X	X	X	X	X	X		X	X	X	X	X	X	X	X		X	X		
RG 1.62 10/73	X	X	X				X	X	X	X		X	X	X	X		X		X	X		
RG 1.68 11/73	X	X	X	X	X	X	X	X	X		X	X	X	X	X	X	X	X	X	X		
RG 1.73 1/74		X	X					X														
RG 1.80 6/74	X	X	X			X	X	X														
RG 1.89 Note 2									X													

Note 1: For a discussion of the degree of conformance to codes and standards listed see the individual system analysis portions of Sections 7.2 through 7.6.
Note 2: Only applicable to Safety Related Display Instruments.

7.2 REACTOR PROTECTION (TRIP) SYSTEM

7.2.1 DESCRIPTION

The reactor protection system (RPS) is designed to cause rapid insertion of control rods (scram) to shut down the reactor when specific variables exceed predetermined limits.

7.2.1.1 Reactor Protection System Description

Schematic arrangements of RPS mechanical equipment and information displayed to the operator are shown in Figure 7.2-1. The RPS component control logic is shown in Figure 7.2-2. The RPS instrumentation is listed in Table 7.2-1. The RPS channel and logic arrangement are shown in Figure 7.2-3. The RPS actuators and logic arrangement are shown in Figure 7.2-4. Trip system logic is shown in Figure 7.2-5. Sensor input arrangements are shown in Figures 7.2-6, 7.2-7, 7.2-8, 7.2-9, and 7.2-10.

The RPS instrumentation is divided into sensor trip channels, trip logic, and trip actuator logic.

During normal operation, all sensor contacts and trip contacts essential to safety are closed; channels, logic, and actuators are energized.

There are at least four sensor trip channels for each variable. The sensor trip channels are designated as A1, A2, B1, and B2. Each sensor trip channel is associated with the trip logic of the same designation.

Trip actuator logics A1 and A2 (trip system A) outputs are combined in a one-out-of-two logic arrangement to control the "A" pilot scram valve solenoid in each of the four rod groups (a rod group consists of approximately 25% of the total of control rods). Trip actuator logic B1 and B2 (trip system B) outputs control the "B" pilot scram valve solenoids in each of the four rod groups.

When a sensor trip channel contact opens, the trip logic deenergizes the trip actuator logic which deenergizes the pilot scram valves associated with that trip actuator logic. However, the other pilot scram valves for each rod must also be deenergized before the scram valves provide a reactor scram.

There are two pilot scram valves and two scram valves for each control rod. Each pilot scram valve is solenoid operated, with the solenoids normally energized. The pilot scram valves control the air supply to the scram valves for each control rod. With either pilot scram valve energized, air pressure holds the scram valves closed. The scram valves control the supply and discharge paths for control rod drive (CRD) water.

When both actuator logic A1 or A2 and B1 or B2 are tripped, air is vented from the scram valves and allows CRD water to act on the CRD piston. Thus, all control rods are scrammed. The water displaced by the movement of each rod piston is exhausted into a scram discharge volume (SDV).

To restore the RPS to normal operation following any single actuator logic trip or a scram, the trip actuators must be reset manually. After a 10-sec delay reset is possible only if the conditions that caused the scram have been cleared. The trip actuators are reset by operating switches in the main control room. Two reset push button switches (A1/B1 and A2/B2) are provided.

There are two 125-V dc solenoid-operated backup scram valves that provide a second means of controlling the air supply to the scram valves for all control rods. When the solenoid for either backup scram valve is energized, the associated backup scram valve vents the air supply for the scram valves. This action initiates insertion of any withdrawn control rods regardless of the action of the scram pilot valves. The backup scram valves solenoids are energized (initiate scram) when trip logic A1 or A2 and B1 or B2 are both tripped.

The RPS receives power from two high inertia ac motor generator (MG) sets. A flywheel provides high inertia sufficient to maintain voltage and frequency within 5% of rated values for at least 1 sec following a momentary loss of power to the drive motor (see Section 8.3.1.1.6).

Alternate power is available to each RPS bus and is manually switched to the bus as necessary for maintenance of the RPS MG sets. The alternate power switch is interlocked to prevent simultaneous feeding of both buses from the same source. The switch also prevents paralleling of an MG set with the alternate supply.

The RPS is designed to use a fail-safe logic and actuation scheme. Therefore, the power supplied by the RPS MG sets to hold RPS components energized is expendable and considered non-safety-related. However, to ensure that overvoltage, undervoltage, or underfrequency do not damage safety-related components within the RPS, two series redundant Class 1E bus monitoring and tripping devices are provided between the RPS bus and each of the non-Class 1E power sources. These devices trip whenever the voltage and frequency exceed predetermined limits (see Figure 8.3-2 and Section 8.3.1.1.6).

An electrical protection assembly (EPA) consisting of Class 1E protective circuitry is installed between the RPS and each of the power sources, which consists of two MG sets and alternate voltage supplies. The EPA provides redundant protection to the RPS and other systems which receive power from the RPS buses by acting to disconnect the RPS from the power source circuits. See Figure 7.2-11.

Sensor trip channel inputs to the RPS causing reactor scram are discussed in the following paragraphs.

7.2.1.1.1 Neutron Monitoring System Trip

To protect the fuel against high heat generation rates, neutron flux is monitored and initiates a reactor scram when predetermined limits are exceeded.

Neutron monitoring system instrumentation is described in Section 7.6. Figure 7.2-6 clarifies the relationship between neutron monitoring system (NMS) channels, NMS logic, and the RPS logic. The NMS sensor channels are considered to be part of the NMS and not the RPS; however, the NMS logic channels are considered to be part of the RPS. Each NMS logic channel receives signals from one intermediate range monitor (IRM) channel and one average power range monitor (APRM) channel.

The NMS logic is arranged so that failure of any one logic channel cannot prevent the initiation of a high neutron flux or simulated thermal power scram. As shown in Figure 7.6-3, there are eight NMS logic channels associated with the RPS. Each RPS logic channel receives inputs from two NMS logic channels.

The source range monitors (SRMs) are not credited to perform any safety function in the plant design basis transients. For that reason, the trip signal inputs from the SRMs are normally removed from the RPS circuitry by the installation of "shorting links". With the "shorting links" installed, the SRM indication and rod block remain fully operable but the SRM trip is bypassed.

The "shorting links" are required to be removed to support performance of shutdown margin testing in Mode 5 under Limiting Condition for Operation (LCO) 3.10.8, "Shutdown Margin (SDM) Test — Refueling." The removal of the "shorting links" during this testing provides a noncoincident NMS trip when any SRM exceeds the high-high flux trip setpoint, any IRM exceeds the high flux trip setpoint. The removal of the "shorting links" is required to be verified within 8 hours prior to placing the Mode switch into the startup/hot standby position and at least once per 12 hours during the time the Mode switch is in the startup/hot standby position when in Mode 5.

7.2.1.1.1.1 Intermediate Range Monitors. The IRMs monitor neutron flux between the upper portion of the SRM range to the lower portion of the APRM range. The IRM detectors are positioned in the core remotely from the control room.

The IRM is divided into two groups of four IRM channels arranged in the core as shown in Figure 7.6-8. Two IRM channels are associated with each of the trip logic channels of the RPS. The arrangement of IRM channels allows one IRM channel in each group to be bypassed without compromising the IRM trip function.

The NMS scram logic trip contacts for IRM can be bypassed by selector switches located on the reactor control benchboard in the main control room. The IRM channels A, C, E, and G bypasses are controlled by one selector switch. Channels B, D, F, and H are controlled by a second selector switch. Each selector switch will bypass only one IRM channel at any time. Bypassing an IRM channel will not inhibit the NMS from providing a protective action when required.

Each IRM channel includes four trip circuits. One trip circuit is used as an instrument trouble trip. It operates on four conditions: (1) when the high voltage drops below a preset level, (2) when one of the modules is not plugged in, (3) loss of negative 15-V dc, or (4) the IRM not in the OPERATE position. Each of the other trip circuits is specified to trip when preset downscale or upscale levels are reached.

The reactor mode switch determines whether IRM trips are effective in initiating a reactor scram. With the reactor mode switch in REFUEL or STARTUP, an IRM upscale or inoperative trip signal actuates an NMS trip of the RPS. At least one IRM channel in each RPS trip system must trip to cause a scram.

7.2.1.1.1.2 Average Power Range Monitors. There are four APRM channels. Each APRM channel consists of an APRM instrument, 2/4 logic module, quad low voltage power supply, local power range instrument, and a calibration/monitoring panel. The APRM channels receive and average input signals from the local power range monitor (LPRM) channels and provide a continuous indication of average reactor power from a few percent to greater than rated reactor power.

The APRMs supply neutron flux high, simulated thermal power, and INOP trip signals to the 2-Out-of-4-Voters. The outputs from all four APRM channels instruments go to each 2-Out-of-4-Voter (logic) module. Each of the 2/4 logic modules interface to one of the four RPS input channels (A1, A2, B1, and B2). The trip outputs from all four APRMs are sent to each 2/4 logic module, such that each input sent to the RPS is a voted result of all four APRMs. A trip output to the RPS is provided when at least two of the same type of trip inputs is in a tripped state for at least two non-bypassed ARPMs.

APRM channel instrumentation trip inputs to the 2/4 logic modules can be bypassed by a single fiber optic selector switch on the reactor control benchboard in the main control room. Each 2/4 logic module is designed to receive a fiber optic bypass of its "home" APRM instrument. The state of that bypass signal is retransmitted to the other 2/4 logic modules in an isolated manner. Each 2/4 logic module will bypass the appropriate channel trip inputs when a bypass signal is active (modulated light is detected) for the APRM channel. Each 2/4 logic module will provide trip outputs to RPS as a voted result of the three unbypassed APRMs when one channel is bypassed, resulting in a 2/3 logic configuration. Bypassing an APRM will not inhibit NMS from performing its safety function. If a bypass indication from more than one APRM channel is received, none of the APRM inputs to the 2/4 logic modules will be bypassed and a trouble alarm will be generated by the "home" APRM.

Each APRM channel receives an independent flow signal input from each of the two recirculation loops and determines the total recirculation driving flow by summing these loop flow inputs. A total of eight loop flow signals are sensed from four pairs of elbow taps. Each pair has an elbow tap in each recirculation loop.

Total recirculation flow rate is calculated by each APRM chassis by adding the flow values for each loop to obtain total flow. The total flow value is used to produce flow biased APRM scram and APRM rod block setpoint values increase proportionally with total recirculation flow rate. The total recirculation flow is also used in the OPRM enable logic.

The LPRM signals are averaged to achieve an APRM flux value. The APRM flux value is then adjusted by a manually entered or digitally transferred gain factor to allow calibration of the APRM. The APRM power is processed through a first order filter with a six second time constant to calculate simulated thermal power. Each APRM channel also calculates a flow signal that is used to determine the APRM's flow –biased rod block and scram setpoints. The APRM simulated thermal power upscale rod block and scram trip setpoints are varied as a function of reactor recirculation flow. The slope of the upscale rod block and scram trip response curves is set to track the required trip setpoint with recirculation flow changes. These calculations are all performed by the digital processor and results in a digital representation of APRM and simulated thermal power, and of the flow-biased rod block and scram setpoints.

At least one APRM voter in each trip system of the RPS must trip to cause a scram. A simplified circuit arrangement is shown in Figure 7.6-11.

Each APRM also includes an Oscillation Power Range Monitor (OPRM) Upscale function. The OPRM Upscale Function receives input signals from the LPRMs within the reactor core, which are combined into the "cells" for evaluation by the OPRM algorithms. Upon detection of thermal hydraulic oscillations, the OPRM initiates an automatic RPS trip signal (see Section 7.6.1.4.4).

In addition to the IRM upscale trip, a fast response APRM trip function with a setpoint of 15% power is active when the reactor mode switch is in the "startup" position.

Diversity of trip initiation for excursions in reactor power is provided by the NMS trip signals and reactor vessel high pressure trip signals. An increase in reactor power will initiate protective action from the NMS as discussed above. This increase in power will cause reactor pressure to increase due to a higher rate of steam generation with no change in turbine control valve position resulting in a trip from reactor vessel high pressure. These variables are independent of one another and provide diverse protective action for this condition.

7.2.1.1.2 Reactor Vessel Pressure

A reactor vessel pressure increase during reactor operation compresses the steam voids and results in increased reactivity; this causes increased core heat generation that could lead to fuel failure and system overpressurization. A scram counteracts a pressure increase by quickly reducing core fission heat generation. The reactor vessel high pressure scram works in conjunction with the pressure relief system to prevent reactor vessel pressure from exceeding the maximum allowable pressure. The reactor vessel high pressure scram setting also protects the core from exceeding thermal hydraulic limits that result from pressure increases during events that occur when the reactor is operating below rated power and flow.

Reactor pressure is monitored by four redundant pressure switches, each of which provides a reactor high pressure signal input to one of the four RPS sensor trip channels.

7.2.1.1.3 Reactor Vessel Water Level

Decreasing water level while the reactor is operating at power decreases the reactor coolant. Should water level decrease too far, fuel damage could result as steam voids form around fuel rods. A reactor scram reduces the fission heat generation within the core.

Reactor vessel water level is monitored by four redundant differential pressure switches each of which provides a reactor vessel low water level (trip level 3) signal input to one of the four RPS sensor trip channels.

Diversity of trip initiation for breaks in the reactor coolant pressure boundary (RCPB) is provided by reactor vessel low water level trip signals and high drywell pressure trip signals.

7.2.1.1.4 Turbine Throttle Valve Position

With the reactor above 29.5% power, generator load rejection or a turbine trip will initiate closure of the turbine throttle valve which can result in a significant addition of positive reactivity to the core as the reactor vessel pressure rise causes steam voids to collapse. The turbine throttle valve closure scram initiates a scram earlier than either the NMS or reactor vessel high pressure to provide required margin below core thermal-hydraulic limits for this category of abnormal operational transients. The scram counteracts the addition of positive reactivity caused by increasing pressure by inserting negative reactivity with control rods. Although the reactor vessel high pressure scram, in conjunction with the pressure relief system, is adequate to preclude overpressurizing the nuclear system, the turbine throttle valve closure scram provides additional margin to the reactor vessel pressure limit.

Turbine throttle valve closure inputs to the RPS originate from eight redundant valve stem position switches mounted on the four turbine throttle valves. Each of the switches opens before the valve is more than 10% closed to provide the earliest positive indication of closure. Each switch provides an input signal to one of the four RPS sensor trip channels. The logic is arranged so that closure of three or more valves is required to initiate a scram. The switches are arranged so that no single failure can prevent a turbine throttle valve closure scram.

Diversity of trip initiation for increases in reactor vessel pressure due to termination of steam flow by turbine throttle valve or governor valve closure is provided by reactor vessel high pressure and high neutron flux trip signals.

Turbine throttle valve closure trip bypass is effected by four pressure switches sensing turbine first stage pressure. The turbine throttle valve closure scram is automatically bypassed if the turbine first stage pressure is less than that corresponding to 29.5% of rated reactor power. The bypass is automatically removed above 29.5% of reactor power.

7.2.1.1.5 Turbine Governor Valve Position

Generator load rejection or a turbine trip with the reactor above 29.5% power automatically initiates fast closure of the turbine governor valves which results in a significant addition of positive reactivity to the core as nuclear system pressure rises. The turbine governor valve fast closure scram initiates a scram earlier than either the NMS or nuclear system high pressure to provide required margin below core thermal-hydraulic limits for this category of abnormal operational transients. The scram counteracts the addition of positive reactivity resulting from increasing pressure by inserting negative reactivity with control rods. Although the nuclear system high pressure scram, in conjunction with the pressure relief system, is adequate to preclude overpressurizing the nuclear system, the turbine governor valve fast closure scram provides additional margin to the nuclear system pressure limit. The turbine governor valve fast closure scram setting is selected to provide timely indication of governor valve fast closure.

Turbine governor valve fast closure inputs to the RPS originate from oil line pressure switches on each of four fast acting governor valve hydraulic mechanisms. Each pressure switch provides an input signal to one of the four RPS sensor trip channels. If hydraulic oil line pressure is lost, a turbine governor valve fast closure scram is initiated.

Automatic turbine governor valve fast closure scram bypass is provided as described above for the turbine throttle valve.

7.2.1.1.6 Main Steam Line Isolation Valves Position

The main steam line isolation valve (MSIV) closure can result in a significant addition of positive reactivity to the core as nuclear system pressure rises.

Two redundant position switches mounted on each of the eight MSIVs provide an MSIV closure signal to the RPS. Each of the switches is arranged to open before the valve is more than 10% closed to provide the earliest positive indication of closure. Either of the two channels sensing isolation valve position can signal valve closure.

Each RPS sensor trip channel logic receives signals from the valves associated with two steam lines. The arrangement of signals within each logic requires closing of at least one valve in each of the two steam lines associated with that logic to cause a trip of that logic. Closure of at least one valve in three or more steam lines is required to initiate a scram.

At plant shutdown and during initial plant startup, a bypass is required for the MSIV closure scram trip to properly reset the RPS. This bypass is in effect when reactor pressure is less than scram setpoint pressure and the mode switch is in the shutdown, refuel, or startup position. The bypass allows plant operation when the MSIVs are closed during low power operation. The operating bypass is removed when the mode switch is placed in RUN.

Diversity of trip initiation due to main steam isolation is provided by reactor vessel high pressure and reactor power trip signals.

7.2.1.1.7 Scram Discharge Volume Water Level

Water displaced by the CRD pistons during a scram goes to the SDV. If the SDV fills with water so that insufficient capacity remains for the water displaced during a scram, control rod movement would be hindered during a scram. To prevent this situation, the reactor is scrammed when the water level in the discharge volume is high enough to verify that the volume is filling up, yet low enough to ensure that the remaining capacity in the discharge volume can accommodate a scram.

Two transmitter/level switches (non-indicating) and two transmitter/level indicating switches directly connected to each of two instrument volumes monitor the volumes for abnormal level. They provide redundant and diverse input to the RPS scram function. One transmitter on each instrument volume also provides input for the control room annunciation and control rod withdrawal block function. The four level switches and the four level indicating switches are interconnected (one of each per trip channel) with the RPS system and initiate a reactor scram on high water level while sufficient volume for full scram still exists within the SDV. To provide diversity for the RPS function the two transmitters per channel use a different sensing operating principle and have a different transmitter manufacturer. The level switches and the level indicating switches in each channel are also from different manufacturers. This arrangement provides diversity, as well as redundancy, to ensure that no single event can prevent a scram caused by SDV high water level.

A scram is automatically initiated when sufficient capacity still remains in the discharge volume to accommodate a scram.

The SDV high water level trip bypass is controlled by the manual operation of two key-locked switches, a bypass switch, and the mode switch. The mode switch must be in the shutdown or refuel position to allow manual bypass of this trip. This bypass allows the operator to reset the RPS scram relays so that the SDV may be drained. Resetting the trip actuators opens the SDV vent and drain valves. An annunciator in the main control room indicates the bypass condition.

7.2.1.1.8 Drywell Pressure

High pressure inside the drywell may indicate a break in the RCPB. Scram is initiated to minimize the possibility of fuel damage. Drywell pressure is monitored by four redundant pressure switches. Each switch provides an input to one of the four RPS sensor trip channels.

7.2.1.1.9 Manual Scram

A scram can be initiated manually. There are four scram switches, one for each of the four RPS trip logic channels. The manual scram switches are arranged in two groups of two switches. One group contains the A1 and B1 switches and the other group contains the A2 and B2 switches. To initiate a manual scram, at least two switches in a group must be depressed. By operating the manual scram switch for one logic channel at a time and then resetting that logic, each actuator logic can be tested for manual scram capability.

7.2.1.1.10 Reactor Mode Switch Manual Scram

Even though the action is not a safety function, reactor scram can be initiated by placing the mode switch in the shutdown position. The mode switch consists of four independent banks of contacts. A shutdown position contact from each of the four banks is a scram input to the associated RPS trip logic channel. The relationship of the reactor mode switch position and its scram function is shown in Figure 7.2-2.

The scram signal, initiated by placing the mode switch in the shutdown position is automatically bypassed after 10 sec by a timer which allows the CRD hydraulic system valve lineup to be restored to normal before the control room operator can reset the RPS logic.

7.2.1.2 Design Basis

The RPS is designed to provide timely protection against the onset and consequences of conditions that threaten the integrity of the fuel barrier and the RCPB. Chapter 15 identifies and evaluates events that jeopardize the fuel barrier and RCPB. The methods of assessing barrier damage and radioactive material releases, along with the methods by which abnormal events are identified, are presented in that chapter. Variables are monitored to provide protective actions to the RPS indicating the need for reactor scram.

7.2.1.2.1 Variables Monitored to Provide Protective Actions

a. NMS trip,
b. Reactor vessel system high pressure,
c. Reactor vessel low water level,
d. Turbine throttle valve closure,
e. Turbine governor valve fast closure,
f. Main steam line isolation,
g. SDC high level, and
h. Drywell high pressure.

The plant conditions that require protective action involving the RPS are described in Chapter 15.

7.2.1.2.2 Location and Minimum Number of Sensors

Neutron flux is the only essential variable of significant spatial dependence that provides inputs to the RPS. The basis for the number and locations of sensors is discussed in the following. The other requirements are fulfilled through the combination of logic arrangement.

Two transient analyses are used to determine the minimum number and physical location of required LPRMs for each APRM.

The first analysis is performed with operating conditions of 100% reactor power and 100% recirculation flow using a continuous rod withdrawal of the maximum worth control rod. In the analysis, LPRM detectors are mathematically removed from the APRM channels. This process is continued until the minimum numbers and locations of detectors needed to provide protective action are determined for this condition.

The second analysis is performed with operating conditions of 100% reactor power and 100% recirculation flow using a reduction of recirculation flow at a fixed design rate. Again, LPRM detectors are mathematically removed from the APRM channels. This process is continued until the minimum numbers and locations of detectors needed to provide protective action are determined for this condition.

The number of LPRM detector signals available as inputs to an APRM channel shall satisfy the following criteria:

a. The number of operable LPRM detector inputs shall be at least 20. The PRNM provides an alarm and rod block. CGS enforces operability administratively.
b. The number of operable LPRM detector inputs per core axial level (A, B, C, or D) shall be at least 3. The PRNM provides an alarm and rod block. CGS enforces operability administratively.
c. The number of LPRM detector inputs that have become inoperable (and bypassed) since the most recent APRM calibration shall be less than 10. This requirement is enforced by administrative means and the Operation and Maintenance (O&M) Manual.

7.2.1.2.3 Prudent Operational Limits

Limits for each safety-related variable trip setting are selected with sufficient margin so that a spurious scram is avoided. It is then verified by analysis that the release of radioactive materials following postulated gross failures of the fuel or the RCPB is kept within acceptable bounds. Design basis operational limits, as listed in the Technical Specifications, are based on operating experience and constrained by the safety design basis and the safety analysis. The selection of tentative scram trip settings has been developed through analytical modeling, experience, historical use of initial setpoints, and adoption of new variables and setpoints as experience was gained. The initial setpoint selection method provided for settings which were sufficiently above the normal operating levels (to preclude the possibilities of spurious scrams or difficulties in operation), but low enough to protect the fuel and pressure barrier. As additional information becomes available or systems are changed, additional scram variables are provided using the above method for initial setpoint selection. The selected scram settings are analyzed to verify that they are conservative and that the fuel, fuel barriers, and nuclear system process barriers are adequately protected. In all cases, the specific scram trip point selected is a conservative value that prevents damage to the fuel or RCPB, taking into consideration previous operating experience and the analytical models.

7.2.1.2.4 Margin

The margin between operational limits and the limiting conditions of operation (scram) for the RPS are those parameters listed in the Technical Specifications. Annunciators are provided to alert the reactor operator of the onset of unsafe conditions.

7.2.1.2.5 Levels

Levels requiring protective action are specified in the Technical Specifications. These levels are design basis limits and are provided in the Technical Specifications as allowable values.

7.2.1.2.6 Malfunctions, Accidents, and Other Unusual Events Which Could Cause Damage to Safety Systems

Unusual events are defined as malfunctions, accidents, and others which could cause damage to safety systems. Chapters 3, 6, 9, 15, and Appendix F describe the following credible accidents and events: floods, storms, tornadoes, earthquakes, fires, loss-of-coolant accident (LOCA), pipe break outside containment, feedwater line break, and missiles. Each of these events is discussed below for the RPS.

All components essential to the operation of the RPS are designed, fabricated, and mounted to Class 1E standards. However, even though the sensors initiating reactor scram which monitor turbine throttle valve position and turbine governor valve fast closure are designed and purchased Quality Class 1, Seismic Category I, they are physically mounted on equipment which is not Seismic Category I/Quality Class 1, and are located in the turbine generator building which is not Seismic Category I but has been shown to maintain its structural integrity following an safe shutdown earthquake (SSE) (see Section 3.8).

For this reason other diverse variables (reactor pressure and neutron flux trips), which are Seismic Category I and Quality Class 1, may be relied on for reactor scram if components in the turbine generator building fail.

7.2.1.2.6.1 Floods. The buildings containing RPS components have been designed to meet the probable maximum flood (PMF) at the site location. See Section 2.4. For a discussion of internal flooding protection see Sections 3.4 and 3.6.

7.2.1.2.6.2 Storms and Tornadoes. The buildings containing RPS components, except the turbine generator building, have been designed to withstand all credible meteorological events and tornadoes as described in Section 3.3.

7.2.1.2.6.3 Earthquakes. The structures containing RPS components, except the turbine building, have been seismically qualified as described in Sections 3.7 and 3.8 and will remain functional during and following a SSE. However, as stated previously, other diverse variables (reactor pressure and neutron flux trips) may be relied on for reactor scram if components in the turbine generator building fail. The design features that prevent the following postulated

failures of turbine throttle and governor valve closure signals to the RPS during a seismic event from affecting other channels of the RPS from performing as required are the following:

a. Shorts to ground: Each trip function input circuit to the RPS is individually fused to prevent degradation of other channels if a short to ground occurs on one channel. This protection also applies to the turbine throttle and governor valve closure trip inputs to the RPS. Therefore, a short to ground would be interrupted by the protective fuses eliminating any interaction or degradation of other channels, as well as resulting in a channel trip due to "fail-safe" logic;

b. Opens: The normal operating state of the RPS trip inputs is a closed contact condition. Therefore, an open in an RPS input channel circuit would result in failure in the safe direction causing a trip of that channel with no degradation or interaction with other channels; and

c. Hot shorts: Reactor protection system cabling that is routed from trip instrumentation through the turbine generator building is enclosed in conduit. Each trip channel has a separate and dedicated conduit. Therefore, hot shorts would be confined to one channel of trip instrumentation and would not degrade or interact with other protective channels.

7.2.1.2.6.4 Fires. To protect the RPS in the event of a postulated localized raceway or panel fire, the RPS trip logics have been divided into four separate sections within two separate RPS panels. The sections within a panel are isolated by electrical separation barriers. If a fire were to occur within one of the sections or in the area of one of the panels, the RPS functions would not be prevented by the fire. The use of separation and barriers ensures that, even though some portion of the system may be affected, the RPS will continue to provide the required protective action. See Appendix F for a discussion of Appendix R fire effects on the RPS.

Within the control room Power Generation Control Complex (PGCC) (underfloor cable routing ducts) heat detectors and products of combustion detectors are provided to initiate a Halon fire suppression system.

Throughout main plant areas, redundant RPS cables are routed in separate raceway divisions sufficiently separated such that a fire cannot affect more than one RPS division.

7.2.1.2.6.5 Loss-of-Coolant Accident. The following RPS system components are located inside the drywell and would be subject to the effects of a design basis LOCA:

a. NMS cabling from the detectors to the main control room,

b. MSIV (inboard) position switches,

c. Reactor vessel pressure and reactor vessel water level instrument taps and sensing lines, which terminate outside the drywell, and

d. Drywell pressure instrument taps.

These items have been environmentally qualified to remain functional during and following a LOCA as discussed in Section 3.11.

7.2.1.2.6.6 Pipe Break Outside Primary Containment. Protection for pipe break outside primary containment is described in Section 3.6.

7.2.1.2.6.7 Missiles. Missile protection for RPS components is described in Section 3.5.

7.2.1.2.7 Minimum Performance Requirements

Minimum performance requirements for RPS instrumentation and controls are provided in the Technical Specifications.

7.2.1.3 Final System Drawings

Functional and architectural design differences between the PSAR and FSAR are listed in Table 1.3-8.

7.2.2 ANALYSIS

The RPS is designed such that loss of plant instrument air, a plant load rejection, or a turbine trip will not prevent the completion of the safety function.

7.2.2.1 Conformance to 10 CFR 50, Appendix A - General Design Criteria

The following is a discussion of conformance to those General Design Criteria (GDC) which apply specifically to the RPS. See Section 3.1 for a discussion of GDC that apply equally to all safety-related systems.

GDC 12 - Suppression of Reactor Power Oscillations

The system design provides protection from excessive fuel cladding temperatures and protects the RCPB from excessive pressures which threaten the integrity of the system. Abnormalities are sensed, and if protection system limits are reached, corrective action is initiated through an automatic scram.

GDC 15 - Reactor Coolant System Design

The RPS provides sufficient margin to ensure that the design conditions of the RCPB are not exceeded during any condition of normal operation, including anticipated operational

occurrences. If the monitored variables exceed their predetermined settings, the system automatically responds to maintain the variables and systems within allowable design limits.

GDC 20 - Protection System Functions

The RPS monitors the appropriate plant variables to maintain the fuel barrier and RCPB and initiates a scram automatically when the variables exceed predetermined limits.

GDC 21 - Protection System Reliability and Testability

The RPS is designed with two groups of redundant sensor channels and four independent and separated output channels. No single failure can prevent a scram and removal from service of any component or channel will not result in loss of required minimum redundancy.

GDC 22 - Protection System Independence

The redundant portions of the RPS are separated such that no single failure or credible natural disaster can prevent a scram, except the turbine scram inputs which originate from the Seismic Category II turbine building. Reactor pressure and power are diverse to the turbine scram variables. In addition, drywell pressure and vessel water level are diverse variables.

GDC 23 - Protection System Failure Modes

The RPS is designed (including logic and actuated devices) to be fail safe. A complete loss of electrical power or air supply will result in a reactor scram. Postulated adverse environments will not prevent a scram.

GDC 24 - Separation of Protection and Control Systems

The RPS has no direct interaction with any plant control system. However, the RPS does receive inputs from the reactor mode switch and the NMS which also provide inputs to plant control systems through isolation devices.

GDC 25 - Protection System Requirements for Reactivity Control Malfunctions

The RPS provides protection against the onset and consequences of conditions that threaten the integrity of the fuel barrier and the RCPB. Any monitored variable which exceeds the scram setpoint will initiate an automatic scram and not impair the remaining variables from being monitored, and if one channel fails the remaining portions of the RPS will function.

GDC 29 - Protection Against Anticipated Operational Occurrences

The RPS is highly reliable and will provide a reactor scram in the event of anticipated operational occurrences.

7.2.2.2 Conformance to IEEE Standards

The following is a discussion of conformance to IEEE 279-1971, Criteria for Protection Systems for Nuclear Power Generating Stations, that applies specifically to the RPS system. See Section 7.1.2.3 for a discussion of IEEE standards that apply equally to all safety-related systems.

General Functional Requirement (IEEE 279-1971, paragraph 4.1)

The RPS automatically initiates the appropriate protective actions whenever the conditions described in Section 7.2.1.1 reach predetermined limits with precision and reliability assuming the full range of conditions and performance discussed in Section 7.2.1.2.

Single Failure Criterion (IEEE 279-1971, paragraph 4.2)

Each of the conditions (variables) described in Section 7.2.1.1 is monitored by redundant sensors supplying input signals to redundant trip logics. Independence of redundant RPS equipment, cables, instrument tubing, etc., is maintained and single failure criteria preserved through the application of the Columbia Generating Station separation criteria as described in Section 8.3.1.4 to ensure that no single credible event can prevent the RPS from accomplishing its safety function.

Quality of Components and Modules (IEEE 279-1971, paragraph 4.3)

For a discussion of the quality of RPS components and modules see Section 3.11.

Equipment Qualification (IEEE 279-1971, paragraph 4.4)

Vendor certification requires that the sensors associated with each of the RPS trip variables, manual switches, and trip logic components perform in accordance with the requirements listed on the purchase specification as well as in the intended application. This certification in conjunction with the existing field experience with these components in this application will serve to qualify these components.

For a complete discussion of RPS equipment protection and qualification see Sections 3.5, 3.6, 3.10, and 3.11.

Channel Integrity (IEEE 279-1971, paragraph 4.5)

For a discussion of RPS channel integrity under all extremes of conditions described in Section 7.2.1.2, see Sections 3.10, 3.11, 8.2.1, and 8.3.1.

Channel Independence (IEEE 279-1971, paragraph 4.6)

The RPS channel independence is maintained through the application of the Columbia Generating Station separation criteria as described in Section 8.3.1.4.

Control and Protection System Interaction (IEEE 279-1971, paragraph 4.7)

See Section 7.2.2.1 (GDC24).

Derivation of System Inputs (IEEE 279-1971, paragraph 4.8)

The RPS trip variables are direct measures of a reactor overpressure condition, a reactor overpower condition, or abnormal conditions within the RCPB except as follows:

Due to the normal throttling action of the turbine governor valves with changes in the plant power level, measurement of governor valve position is not an appropriate variable from which to infer the desired variable, which is "rapid loss of the reactor heat sink." Consequently, a measurement of governor valve closure rate is necessary.

Protection system design practice has discouraged use of rate sensing devices for protective purposes. In this instance, it was determined that detection of hydraulic actuator operation would be a more positive means of determining fast closure of the governor valves.

Loss of pressure in the hydraulic oil lines which initiates fast closure of the governor valves is monitored. These measurements provide indication that fast closure of the governor valves is imminent.

This measurement is adequate and a proper variable for the protective function taking into consideration the reliability of the chosen sensors relative to other available sensors and the difficulty in making direct measurements of governor valve fast-closure rate.

Capability for Sensor Checks (IEEE 279-1971, paragraph 4.9)

See Section 7.2.2.3 (Regulatory Guide 1.22).

Capability for Test and Calibration (IEEE 279-1971, paragraph 4.10)

See Section 7.2.2.3 (Regulatory Guide 1.22).

Channel Bypass or Removal from Operation (IEEE 279-1971, paragraph 4.11)

The MSIV and the turbine throttle valve closure trip variables have no provision for sensor removal from service because of the use of valve position limit switches as the channel sensor.

During periodic tests of any one trip channel, a sensor may be valved out of service and returned to service under administrative control procedures. Since only one sensor is valved out of service at any given time during the test interval, protective action capability for RPS automatic initiation is maintained through the remaining redundant instrument channels.

A sufficient number of IRM channels is provided to permit any one IRM channel in a given trip system to be manually bypassed and still ensure that the remaining operable IRM channels comply with the IEEE 279 single failure design requirements.

One IRM manual bypass switch has been provided for each RPS trip system. The mechanical characteristics of this switch permit only one of the four IRM channels of that trip system to be bypassed at any time. To accommodate a single failure of this bypass switch, electrical interlocks have also been incorporated into the bypass logic to prevent bypassing of more than one IRM in that trip system at any time. Consequently, with any IRM bypassed in a given trip system, three IRM channels remain in operation to satisfy the protection system requirements.

A single manual APRM bypass switch is provided for all four APRM channels. This is a mechanical/optical switch that allows only one APRM channel to be bypassed at any time. This interlock is accomplished independently in each of the APRM/OPRM 2-Out-of-4-Voter Channels. With any one APRM channel bypassed, the three remaining operating channels provide the necessary protection of the reactor. Bypassing an APRM channel bypasses both the APRM and OPRM trips from that channel. None of the 2-Out-of-4-Voter channels can be bypassed.

The mode switch produces operating bypasses which need not be annunciated because they are removed by normal reactor operating sequence.

Operating Bypasses (IEEE 279-1971, paragraph 4.12)

For a discussion of RPS operating bypasses see Sections 7.2.1.1 and 7.2.1.1.4 through 7.2.1.1.7.

Indication of Bypasses (IEEE 279-1971, paragraph 4.13)

For a discussion of bypass and inoperability indication see Section 7.1.2.4 (Regulatory Guide 1.47).

Access to Means for Bypassing (IEEE 279-1971, paragraph 4.14)

Access to means of bypassing any safety action or safety function is under the administrative control of the control room supervisor/shift manager. Other approved methods of controlling access to bypasses are also used. These include key locks with administrative control of the access to keys, procedurally controlled equipment lineups, e.g., locked valve checklists, and the use of mechanical locking devices and annunciators and other indications, e.g., BISI (Regulatory Guide 1.47, Bypass and Inoperable Status Indication for Nuclear Power Plant Safety Systems, described in Section 7.1.2.4). These additional methods help to prevent inadvertent bypasses or to alert the plant operators to safety function bypasses occurring either from equipment failures or from manually induced bypasses that result as part of testing, maintenance, or equipment repair activities.

Key-locked control switches that provide a means of controlling the access to a safety function bypass are designed to allow key removal only in the "safe" or "accident" positions. Access to the associated keys is procedurally controlled. When not in use, keys are under the administrative control of the control room supervisor/shift manager and stored in a key locker. The keys are audited once per day by the control room supervisor/shift manager. When operation of a key-locked control switch is required to be immediate, such as in the case of the reactor mode switch, the key may be left in the lock during normal plant operation to ensure timely actuation.

Multiple Set Points (IEEE 279-1971, paragraph 4.15)

There are no multiple setpoints within the RPS.

Completion of Protective Action Once it is Initiated (IEEE 279-1971, paragraph 4.16)

Once the RPS trip logic is deenergized as a result of a sensor trip channel becoming tripped or the depressing of a manual scram push button, the scram contractor seal-in contact opens and completion of protective action is achieved without regard to the state of the initiating sensor trip channel.

After initial conditions (variable trip and logic deenergization) return to normal, deliberate operator action is required to return (reset) the RPS logic to normal (energized).

Manual Initiation (IEEE 279-1971, paragraph 4.17)

See Section 7.2.2.3 (Regulatory Guide 1.62).

Access to Set Point Adjustments, Calibration, and Test Points (IEEE 279-1971, paragraph 4.18)

During reactor operation, access to setpoint or calibration controls is not possible for the following RPS trip variables: SDV high water level, MSIV closure, and turbine throttle valve closure.

Access to setpoint adjustments, calibration controls, and test points for all other RPS trip variables are under the administrative control of the control room operator.

Identification of Protective Actions (IEEE 279-1971, paragraph 4.19)

When any one of the redundant RPS trip sensors exceeds its setpoint value, a control room annunciator is initiated to identify that variable and a printed record is available from the computer work stations.

Information Readout (IEEE 279-1971, paragraph 4.20)

The RPS is designed to provide the operator with accurate and timely information pertinent to its status. It does not give anomalous indications that would confuse the operator.

System Repair (IEEE 279-1971, paragraph 4.21)

During periodic testing of the RPS sensor channels (except as noted below), the operator can determine defective components and replace them during plant operation.

During reactor operation, the control room operator is able to determine failed sensors for the following RPS trip variables, but subsequent repair can only be accomplished during reactor shutdown: MSIV closure, turbine throttle valve closure, neutron monitoring (APRM) system, and neutron monitoring (IRM) system.

Replacement of IRM and LPRM detectors must be accomplished during plant shutdown. Repair of the remaining portions of the NMS may be accomplished during plant operation by appropriate bypassing of the defective instrument channel. The design of the system facilitates rapid diagnosis and repair.

Identification of Protection Systems (IEEE 279-1971, paragraph 4.22)

The RPS components are identified with an RPS designation colored marker plate. Cabling outside the cabinets is identified specifically as RPS wiring. (See also Section 8.3.1.3.) Redundant racks are identified by the identification marker plates of instruments on the racks.

7.2.2.3 Conformance to NRC Regulatory Guides

The following is a discussion of conformance to those Regulatory Guides that apply specifically to the RPS. See Section 7.1.2.4 for a discussion of Regulatory Guides which apply equally to all safety-related systems.

Regulatory Guide 1.22 (February 1972), Period Testing of Protection System Actuation Function

The RPS can be tested during reactor operation by the following separate tests:

The manual scram test verifies the ability to deenergize the scram pilot valve solenoids without scram by using the manual scram push button switches. By depressing the manual scram button for one trip logic, the trip actuators are deenergized, opening contacts in the actuator logics.

After the first trip channel is reset, the second trip channel is tripped manually and so forth for the four manual scram buttons. In addition to control room and computer printout indications, scram group indicator lights verify that the actuator contacts have opened and interrupted power to the scram solenoids.

The single rod scram test verifies the capability of each rod to scram. It is accomplished by operating two toggle switches on the hydraulic control unit for the particular CRD. Timing traces can be made for each rod scrammed.

The sensor test involves applying a test signal to each RPS sensor trip channel in turn and observing that a logic trip results. The test signals can be applied to the processing sensing instrumentation (pressure and differential pressure) through calibration taps.

During plant operation, the operator can set the turbine throttle valve or main steam line closure logic test switch in test position and actuate the other valve, which completes the respective channel trip with annunciation and computer logging. The operator can then confirm that the main steam line isolation and turbine throttle valve limit switches operate during valve motion, from full open to full closed and vice versa, by comparing the time that the RPS channel trip occurs with the time that the valve position indicator lights in the control room signal that the valve is fully open and fully closed. This test does not confirm the exact setpoint, but does provide the operator with an indication that the limit switch operates between the limiting positions of the valve. During reactor shutdown, calibration of the main steam line isolation and turbine throttle valve limit switch set point at a valve position of less than or equal to 10% closure is possible by physical observation of the valve stem.

During reactor operation, a test and calibration of the individual hydraulic oil line pressure sensors associated with turbine control valve fast closure when the plant is operating above 29.5% of rated power may be accomplished by valving one sensor out-of-service at a time and introducing a test pressure input.

The APRMs are calibrated to reactor power by using a reactor heat balance and the traversing in-core probe (TIP) system to establish the relative local flux profile. The LPRM gain settings are determined from the local flux profiles measured by the TIP system once the total reactor heat balance has been determined.

The gain adjustment factors for the LPRMs are produced as a result of the computer calculations involving the reactor heat balance and the TIP flux distributions. The APRM and LPRM gains are adjusted using the instrument's front panel display or accepting the APRM gain calculated from the Percent Core Thermal Power (%CTP) and LPRM Gain adjustment factors that are downloaded from the core monitoring system. These adjustments, when incorporated into the LPRMs, permit the nuclear calculations to be completed for the next operating interval and establish the APRM calibration relative to reactor power.

During reactor operation, one manual scram push button may be depressed to test the proper operation of the switch and trip logic relay. Once the RPS is reset, the other switches may be depressed to test their operation one at a time. For each such operation, a control room annunciation will be initiated and the process computer will print the identification of the pertinent trip.

Operation of the reactor mode switch from one position to another may be employed to confirm certain aspects of the RPS trip channels during periodic test and calibration at shutdown only. During tests of the trip channels, proper operation of the mode switch contacts can be easily verified by noting that certain sensors are connected into the RPS logic and that other sensors are bypassed in the RPS logic in an appropriate manner of the given position of the mode switch.

In the startup and run modes of plant operation, procedures may be used to confirm that SDV high water level trip channels cannot be bypassed as a result of the operating bypass switch. In the shutdown and refuel modes of plant operation, a similar procedure may be used to bypass all four SDV trip channels. Due to the discrete "on-off" nature of the bypass function, calibration is not meaningful.

Administrative control must be exercised to valve one turbine first-stage pressure sensor out-of-service for the periodic test. During this test, a variable pressure source may be introduced to operate the sensor at the setpoint value. When the condition for bypass has been

achieved on an individual sensor under test, the control room annunciator for this bypass function will be initiated. If the RPS trip channel associated with this sensor is in its tripped state, the process computer will log the return to normal state for the RPS trip logic. When the plant is operating above 29.5% of rated power, testing of the turbine throttle valve and governor valve fast closure trip channels will confirm that the bypass function is not in effect.

Operation of the reset switch following a trip of one RPS trip system will confirm that the switch is performing its intended function. Operation of the reset switch following trip of both RPS trip systems will confirm that all portions of the switch and relay logic are functioning properly since half of the control rods are returned to a normal state for one actuation of the switch.

A manual scram switch permits each individual trip logic, trip actuator, and trip actuator logic to be tested on a periodic basis. Testing of each process sensor of the protection system affords an opportunity to verify proper operation of these components. Calibration of the time response of the trip channel relays and trip actuators may be accomplished by connection of external test equipment.

Regulatory Guide 1.53 (June 1973), Application of the Single Failure Criterion to Nuclear Power Plant Protection Systems

See Section 7.2.2.2 (IEEE 279-1971, Paragraph 4.2).

Regulatory Guide 1.62 (October 1973), Manual Initiation of Protective Actions

Means are provided for manual initiation of the RPS at the system level through the use of four push button switches located on the control room bench board.

Operation of two switches (one in each trip system) accomplishes the initiation of all actions performed by the automatic initiation circuitry.

Placing the reactor mode switch in the shutdown position will also cause a system level initiation.

Table 7.2-1

Reactor Protection System Instrumentation

Function	Instrument[a]
Scram	
Reactor vessel high pressure	Pressure switch (B22-N023A-D) MS-PS-23A-D
Drywell high pressure	Pressure switch (C72-N002A-D) RPS-PS-2A-D
Reactor vessel low water level (level 3)	Level switch (B22-N024A-D) MS-LIS-24A-D
Scram discharge volume high water level	Transmitter/Level Indicating Switch CRD-LT-12A-D CRD-LIS-601A-D Transmitter/Level Switch CRD-LT-13A-D CRD-LS-613-A-D
Turbine throttle valve closure	Position switch (C72-N006A-D) RPS-POS-33T/1A-4A RPS-POS-33T/1B-4B
Turbine governor valve fast closure	Pressure switch (C72-N005A-D) RPS-PS-5A-D
Main steam line isolation valve closure	Position switch (B22F022 A-D) MS-V-22 A-D (B22F028 A-D) MS-V-28 A-D
Neutron monitoring system	IRM, APRM, OPRM

Table 7.2-1

Reactor Protection System Instrumentation (Continued)

Function	Instrument[a]
Bypass	
Discharge volume high water level trip bypass	N/A
Turbine stop valve and governor valve fast-closure trip bypass	Pressure switch (C72-N003A-D) MS-PS-3A-D
Main steam line isolation valve closure trip bypass	Pressure switch (B22-N020A-D) MS-PS-20A-D

[a] Instruments in parentheses are the GE designation.

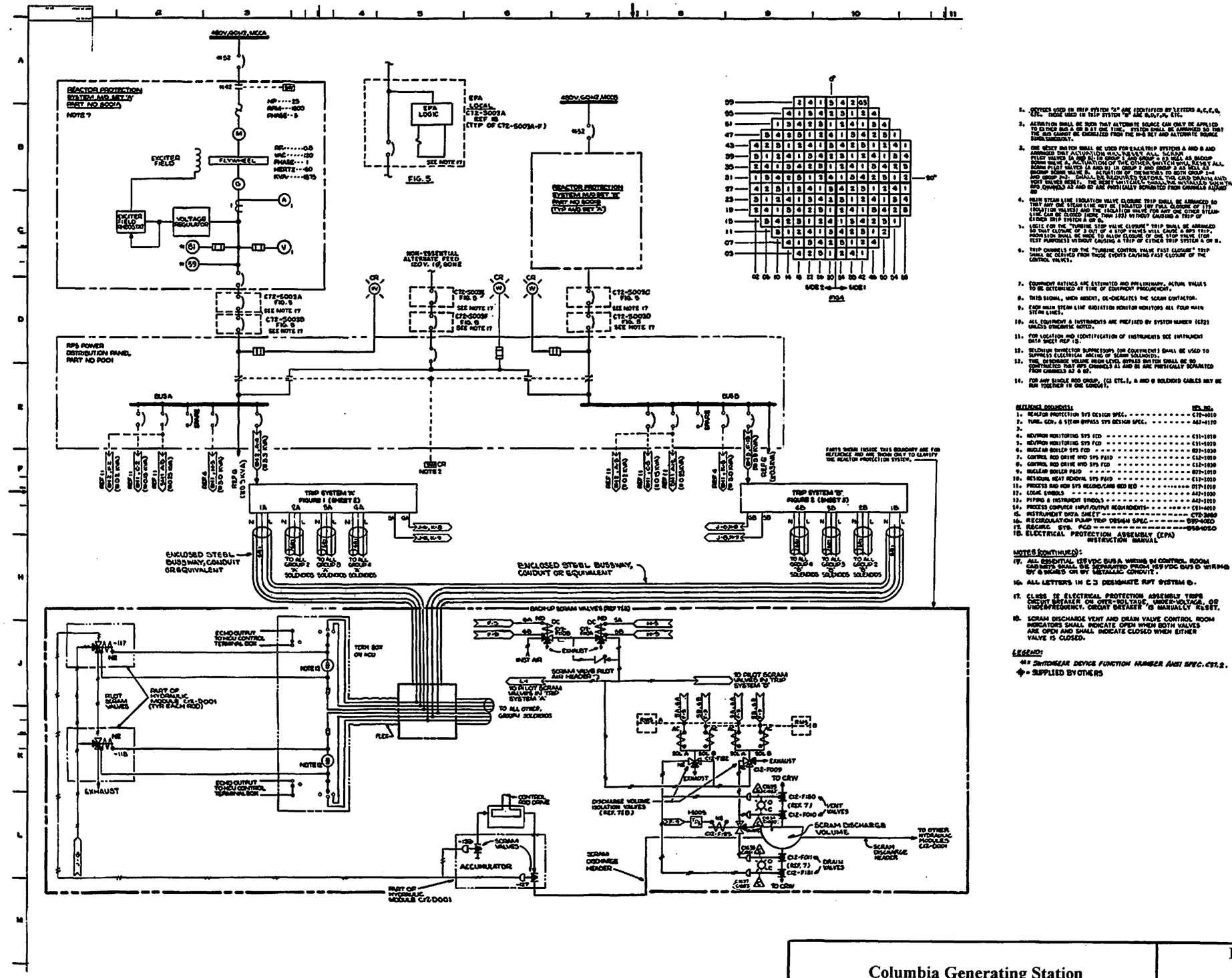

1. CONTACTS USED IN TRIP SYSTEM "A" ARE IDENTIFIED BY LETTERS A, C, E, G, ETC. THOSE USED IN TRIP SYSTEM "B" ARE B, D, F, H, ETC.
2. ACTUATION SHALL BE SUCH THAT AUTOMATIC SOURCE CAN ONLY BE APPLIED TO ELIMINATE BUS A OR BUS B AT ONE TIME. SYSTEM SHALL BE ARRANGED SO THAT THE BUS CANNOT BE ENERGIZED FROM THE M-G SET AND AUTOMATIC SOURCE SIMULTANEOUSLY.
3. ONE HONEY SWITCH SHALL BE USED FOR EACH TRIP SYSTEM'S A AND B AND ARRANGED THAT ACTUATION SHALL ENERGIZE ALL SCRAM PILOT VALVES IN ONE BAY IN GROUP 1 AND GROUP 3 AS WELL AS BACKUP SCRAM VALVE A. ACTUATION OF THE OTHER SWITCH WILL ENERGIZE ALL SCRAM PILOT VALVES IN AND BY IN GROUP 2 AND GROUP 4 AS WELL AS BACKUP SCRAM VALVE B. ACTUATION OF EITHER SWITCH OF EITHER GROUP 2 AND GROUP 3 SHALL BE REQUIRED TO ACTUATE TWO CRD DRAIN AND VENT VALVES EACH. THE HONEY SWITCHES SHALL BE INTERLOCKED SUCH THAT BOTH CHANNELS A AND B ARE PHYSICALLY SEPARATED FROM CHANNELS A AND B.
4. MAIN STEAM LINE ISOLATION VALVE CLOSURE TRIP SHALL BE ARRANGED SO THAT ANY ONE STEAM LINE MAY BE ISOLATED (BY FULL CLOSURE OF ITS ISOLATION VALVES) AND THE ISOLATION VALVE FOR ANY ONE OTHER STEAM LINE CAN BE CLOSED (NOT MORE THAN ONE) WITHOUT CAUSING A TRIP OF EITHER TRIP SYSTEM A OR B.
5. LOGIC FOR THE "TURBINE STOP VALVE CLOSURE" TRIP SHALL BE ARRANGED SO THAT CLOSURE OF 2 OUT OF 4 STOP VALVES WILL CAUSE A RPS TRIP. PROVISION SHALL BE MADE TO ALLOW CLOSURE OF ONE STOP VALVE (FOR TEST PURPOSES) WITHOUT CAUSING A TRIP OF EITHER TRIP SYSTEM A OR B.
6. TRIP CHANNELS FOR THE "TURBINE CONTROL VALVE FAST CLOSURE" TRIP SHALL BE DERIVED FROM THOSE EVENTS CAUSING FAST CLOSURE OF THE CONTROL VALVES.
7. EQUIPMENT RATINGS ARE ESTIMATED AND PRELIMINARY. ACTUAL VALUES TO BE DETERMINED AT TIME OF EQUIPMENT PROCUREMENT.
8. THIS SIGNAL, WHEN ABSENT, DE-ENERGIZES THE SCRAM CONTACTOR.
9. EACH MAIN STEAM LINE RADIATION MONITOR MONITORS ALL FOUR MAIN STEAM LINES.
10. ALL EQUIPMENT & INSTRUMENTS ARE PREFIXED BY SYSTEM NUMBER (C72) UNLESS OTHERWISE NOTED.
11. FOR LOCATION AND IDENTIFICATION OF INSTRUMENTS SEE INSTRUMENT DATA SHEET REF 19.
12. SELENIUM RECTIFIER SUPPRESSORS (OR EQUIVALENT) SHALL BE USED TO SUPPRESS ELECTRICAL ARCING OF SCRAM SOLENOIDS.
13. THE OVERRIDE VOLUME HIGH LEVEL BYPASS SWITCH SHALL BE SO CONSTRUCTED THAT ITS CHANNELS A1 AND B1 ARE PHYSICALLY SEPARATED FROM CHANNELS A2 & B2.
14. FOR ANY SINGLE ROD GROUP, (SE ETC.), A AND B SOLENOID CABLES MAY BE RUN TOGETHER IN ONE CONDUIT.

REFERENCE DOCUMENTS: — RPS NO.

1. REACTOR PROTECTION SYS DESIGN SPEC. — C72-4010
2. TURB. GEN. & STEAM BYPASS SYS DESIGN SPEC. — A67-4170
3. —
4. NEUTRON MONITORING SYS FCD — C51-1010
5. NEUTRON MONITORING SYS FCD — C51-1020
6. NUCLEAR BOILER SYS FCD — B21-1030
7. CONTROL ROD DRIVE HYD SYS FCD — C12-1010
8. CONTROL ROD DRIVE HYD SYS FCD — C12-1020
9. NUCLEAR BOILER P&ID — B21-1010
10. RECIRCUL HEAT REMOVAL SYS P&ID — C11-1010
11. PROCESS RAD MON SYS RECORD/CAMS ECD ECD — D17-1010
12. LOGIC SYMBOLS — A42-1000
13. PIPING & INSTRUMENT SYMBOLS — A42-1010
14. PROCESS COMPUTER INPUT/OUTPUT REQUIREMENTS — C51-4010
15. INSTRUMENT DATA SHEET — C72-2660
16. RECIRCULATION PUMP TRIP DESIGN SPEC — B33-4020
17. RECIRC SYS. FCD — B33-4010
18. ELECTRICAL PROTECTION ASSEMBLY (EPA) INSTRUCTION MANUAL

NOTES (CONTINUED):

17. ALL ESSENTIAL 125 VDC BUS A WIRING IN CONTROL ROOM CABINETS SHALL BE SEGREGATED FROM 125 VDC BUS B WIRING BY BARRIERS OR BY METALLIC CONDUIT.
18. ALL LETTERS IN [ ] DESIGNATE RPT SYSTEM B.
19. CLOSE OF ELECTRICAL PROTECTION ASSEMBLY TRIPS CIRCUIT BREAKER ON OVER-VOLTAGE, UNDER-VOLTAGE, OR UNDERFREQUENCY. CIRCUIT BREAKER IS MANUALLY RESET.
20. SCRAM DISCHARGE VENT AND DRAIN VALVE CONTROL ROOM INDICATORS SHALL INDICATE OPEN WHEN BOTH VALVES ARE OPEN AND SHALL INDICATE CLOSED WHEN EITHER VALVE IS CLOSED.

LEGEND:

= SWITCHGEAR DEVICE FUNCTION NUMBER ANSI SPEC. C37.2.
◆ = SUPPLIED BY OTHERS

Columbia Generating Station Final Safety Analysis Report	Reactor Protection System - IED		
	Draw. No. 02C72-04,1,1	Rev. 13	Figure 7.2-1.1

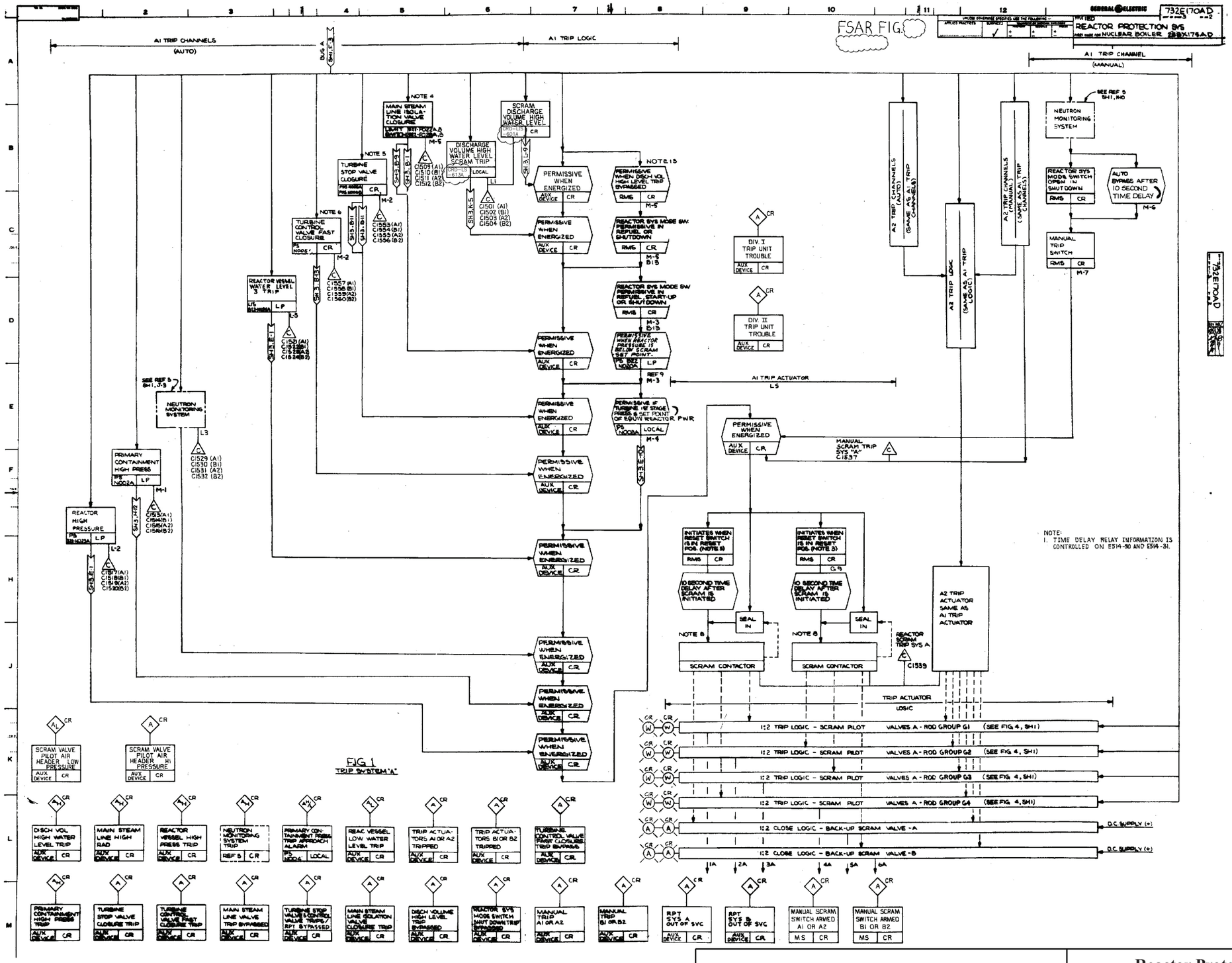

FIG 1
TRIP SYSTEM "A"

Columbia Generating Station
Final Safety Analysis Report

Reactor Protection System - IED

Draw. No. 02C72-04,1,2	Rev. 14	Figure 7.2-1.2

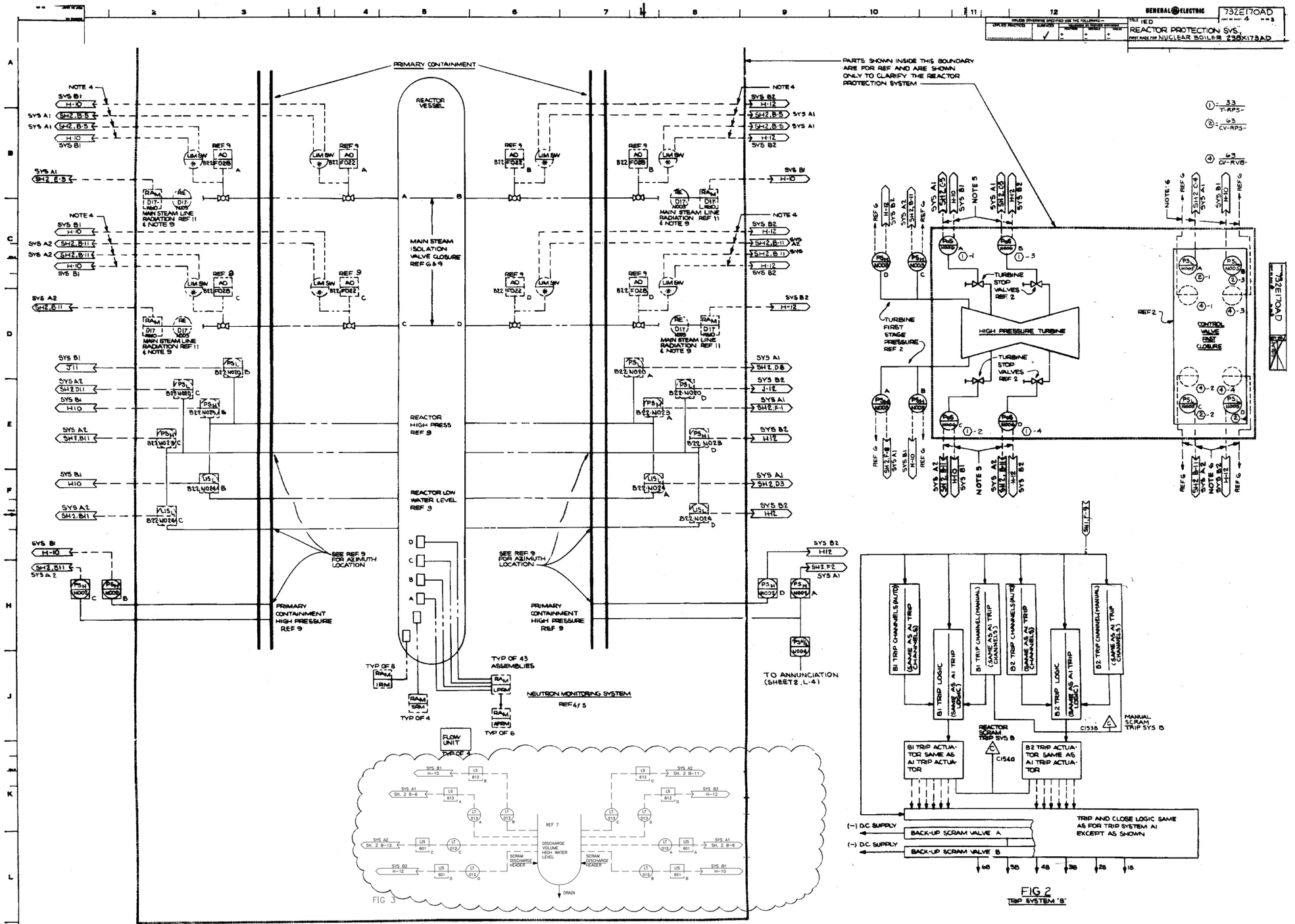

Columbia Generating Station Final Safety Analysis Report	Reactor Protection System - IED		
	Draw. No. 02C72-04,1,3	Rev. 11	Figure 7.2-1.3

Form No. 960690ai

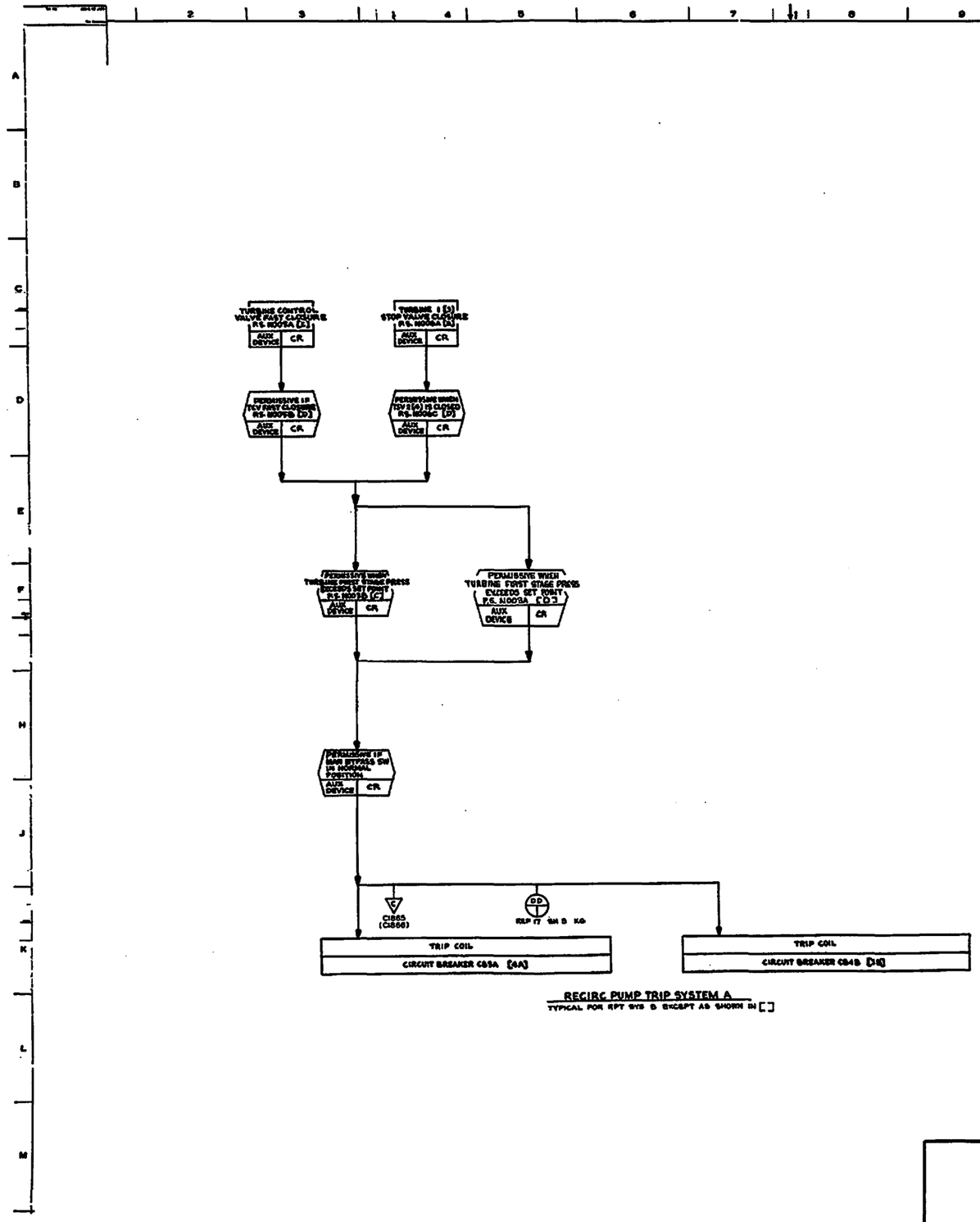

RECIRC PUMP TRIP SYSTEM A
TYPICAL FOR RPT SYS B EXCEPT AS SHOWN IN [ ]

TABLE I REACTOR PROTECTION SYSTEM COMPUTER ALARM INPUTS

	DESCRIPTION	COMPUTER INPUTS CHANNEL (DIVISION)			
		A1 (1)	B1 (2)	A2 (3)	B2 (4)
1.	SCRAM DISCHARGE VOLUME HIGH WATER LEVEL TRIP	C1501	C1502	C1503	C1504
2.	DRYWELL HIGH PRESSURE TRIP	C1513	C1514	C1515	C1516
3.	REACTOR VESSEL HIGH PRESSURE TRIP	C1517	C1518	C1519	C1520
4.	REACTOR VESSEL LOW WATER LEVEL TRIP	C1521	C1522	C1523	C1524
5.	MSLRM, MU-MU INOP	C1525	C1526	C1527	C1528
6.	TURBINE CONTROL VALVE FAST CLOSURE TRIP	C1557	C1558	C1559	C1560
7.	MSIV NOT FULLY OPEN TRIP #	C1509	C1510	C1511	C1512
8.	TURBINE STOP VALVE CLOSURE TRIP ##	C1563	C1564	C1565	C1566
9.	NEUTRON MONITORING SYSTEM TRIP###	C1529	C1530	C1531	C1532
10.	REACTOR MANUAL SCRAM	C1537	C1538	C1537	C1538
11.	REACTOR SCRAM	C1539	C1540	C1539	C1540
12.	RPT SYSTEM "A" TRIP	C1865	—	—	—
13	RPT SYSTEM "B" TRIP	—	C1866	—	—
14	SCRAM DISCHARGE VOLUME VENT VALVES (C11-F010, C11-F180) CLOSED.	C1634	C1635	—	—
15	SCRAM DISCHARGE VOLUME DRAIN VALVES (C11-F011, C11-F181) CLOSED	C1636	C1637	—	—
16	SCRAM DISCHARGE VOLUME VENT VALVES (C11-F012, C11-F180) FULL CLOSE	C1880	C1882	——	——
17	SCRAM DISCHARGE VOLUME DRAIN VALVES (C11-F011, C11-F181) FULL CLOSE	C1881	C1883	——	——

#: INDICATION FROM 2 MS LINES REQUIRED PER CHANNEL
##: CLOSURE OF 2 STOP VALVES REQUIRED PER CHANNEL
###: EITHER OF 2 NMS TRIPS WILL TRIP CHANNEL

Columbia Generating Station Final Safety Analysis Report	Reactor Protection System - IED		
	Draw. No. 02C72-04,1,4	Rev. 12	Figure 7.2-1.4

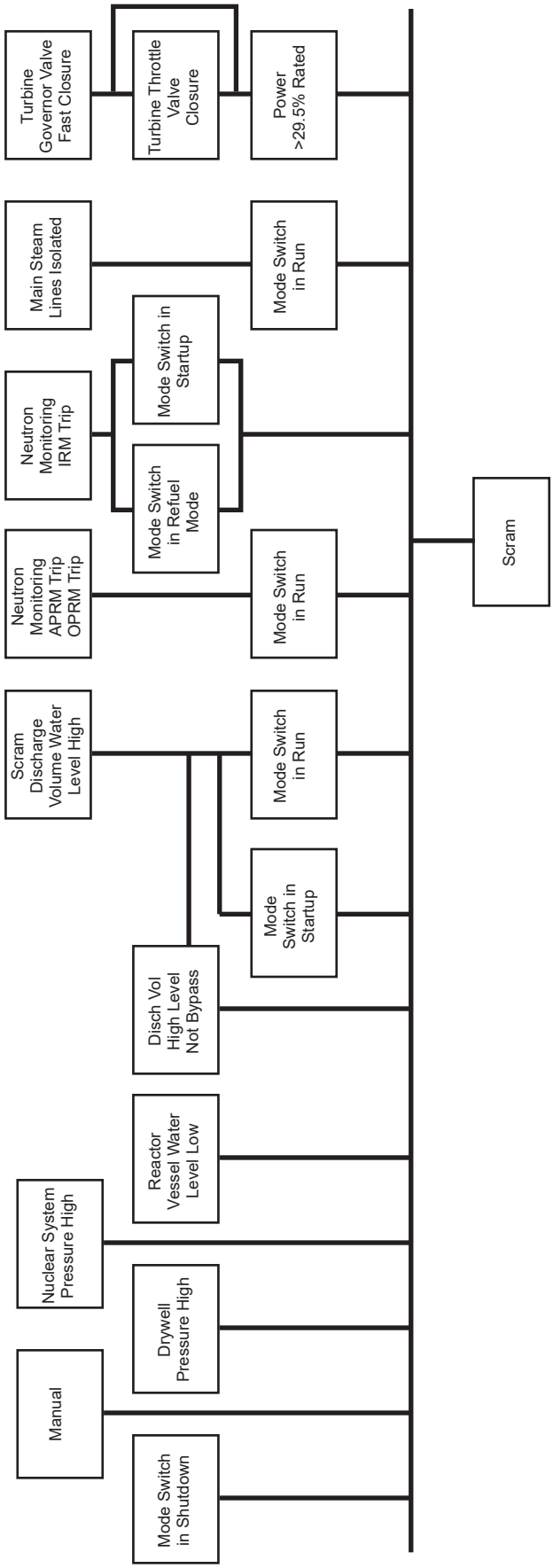

Columbia Generating Station
Final Safety Analysis Report

Reactor Protection System Scram Functions

Draw. No. 900547.30	Rev.	Figure 7.2-2

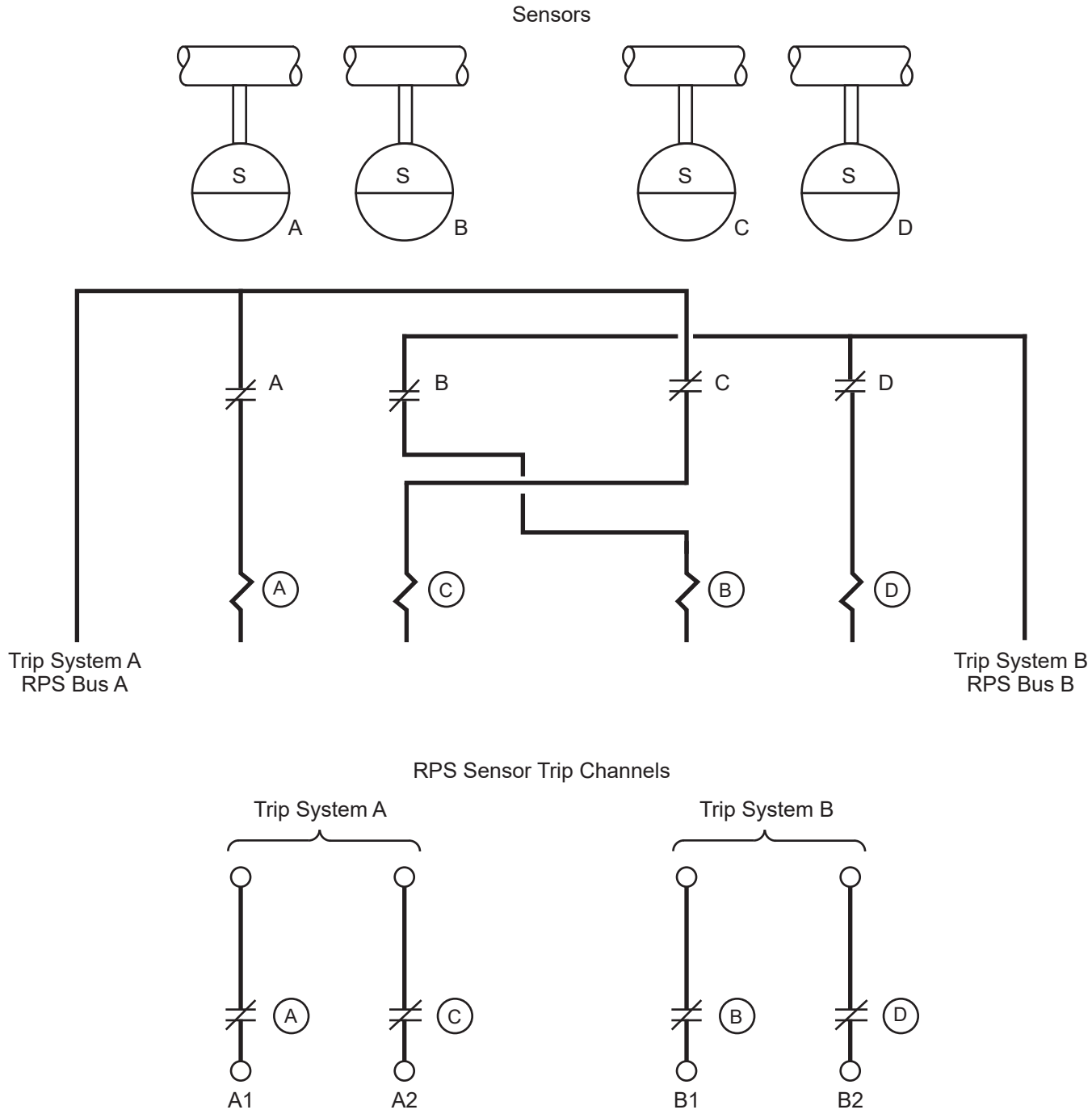

Note: Contacts shown in normal (plant operation) position

Columbia Generating Station **Final Safety Analysis Report**	**Arrangement of RPS Sensor Trip Channels and Trip Logics**		
	Draw. No. **900547.22**	Rev.	Figure **7.2-3**

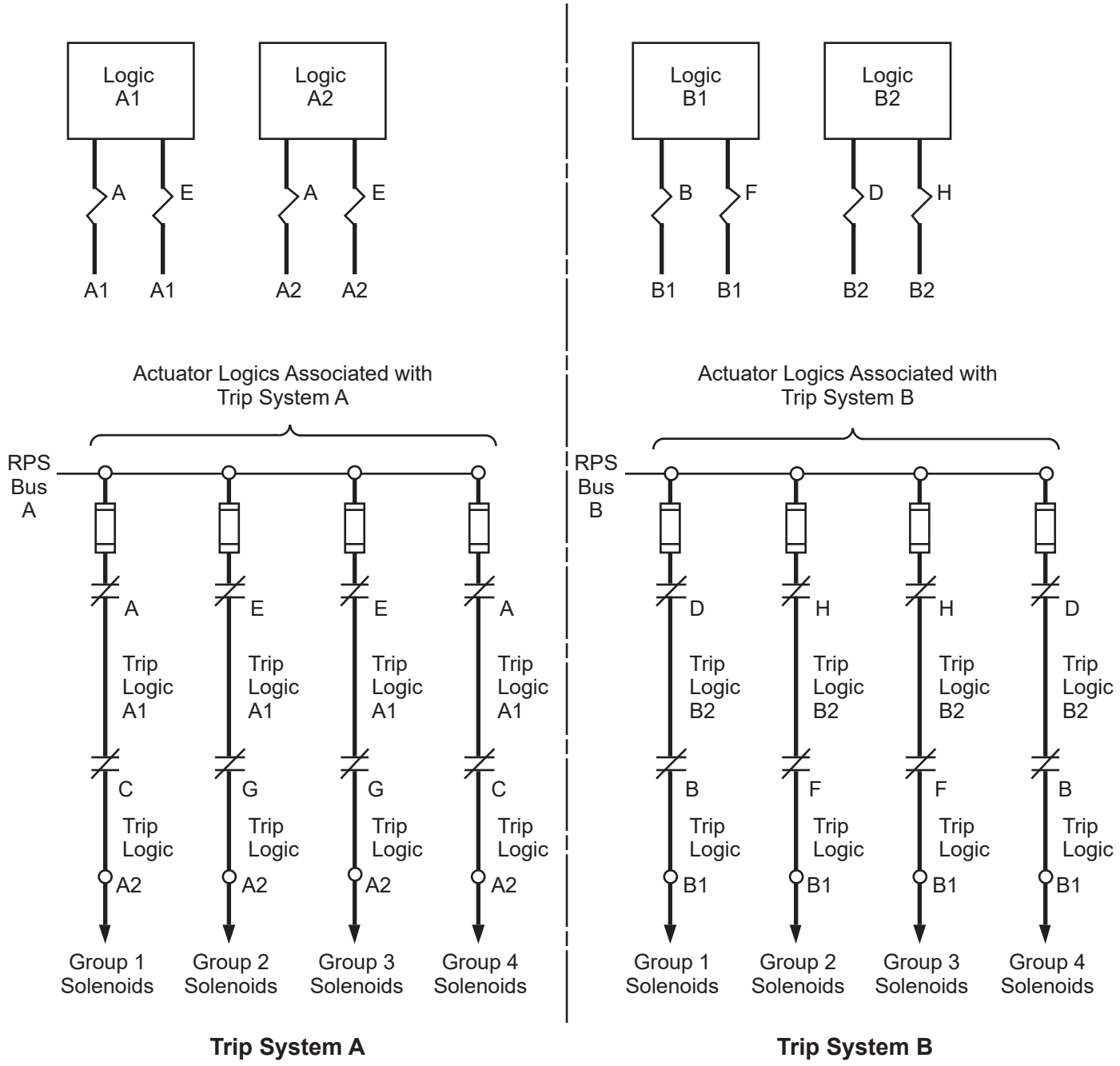

Note: Contacts shown in normal condition (plant operation) position

Columbia Generating Station Final Safety Analysis Report	Arrangement of Actuators and Actuator Logics		
	Draw. No. 900547.23	Rev.	Figure 7.2-4

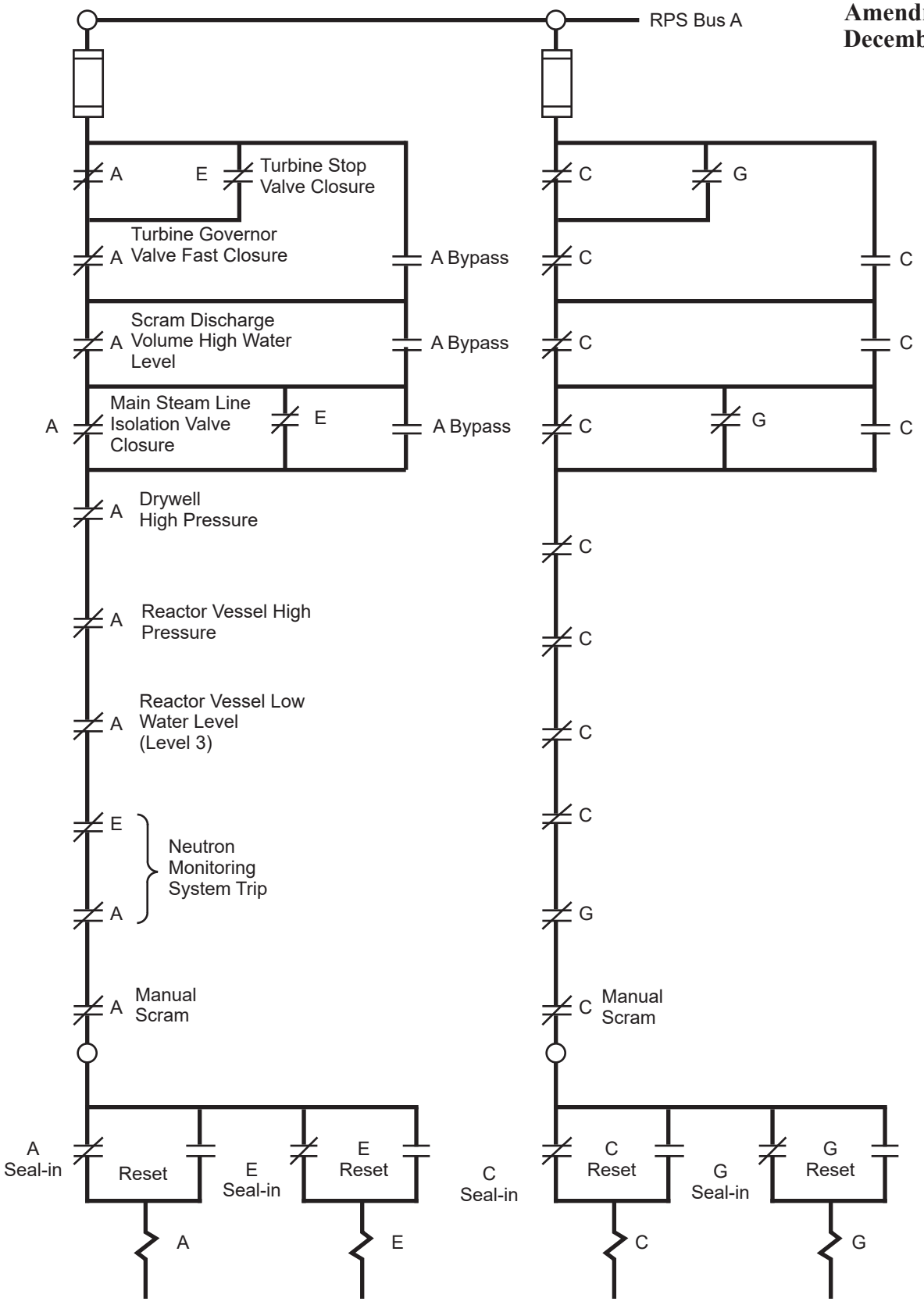

Note: Contacts are shown in normal (plant operation) position.

Columbia Generating Station Final Safety Analysis Report	Trip Logics in One Trip System (Schematic)		
	Draw. No. 900547.34	Rev. 1	Figure 7.2-5

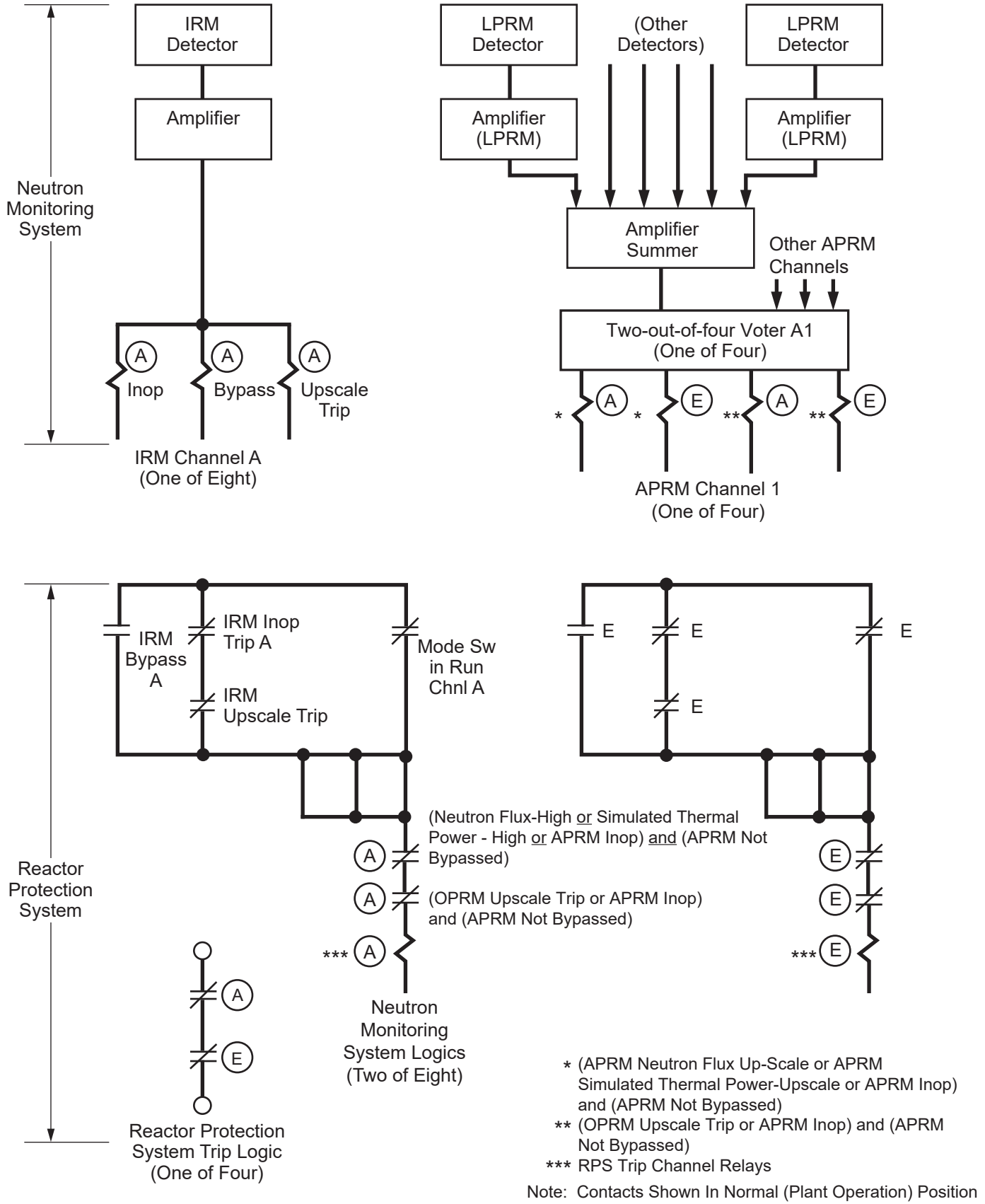

* (APRM Neutron Flux Up-Scale or APRM Simulated Thermal Power-Upscale or APRM Inop) and (APRM Not Bypassed)
** (OPRM Upscale Trip or APRM Inop) and (APRM Not Bypassed)
*** RPS Trip Channel Relays

Note: Contacts Shown In Normal (Plant Operation) Position

Columbia Generating Station Final Safety Analysis Report	**Relationships between Neutron Monitoring System and Reactor Protection System**		
	Draw. No. **900547.21**	Rev. **1**	Figure **7.2-6**

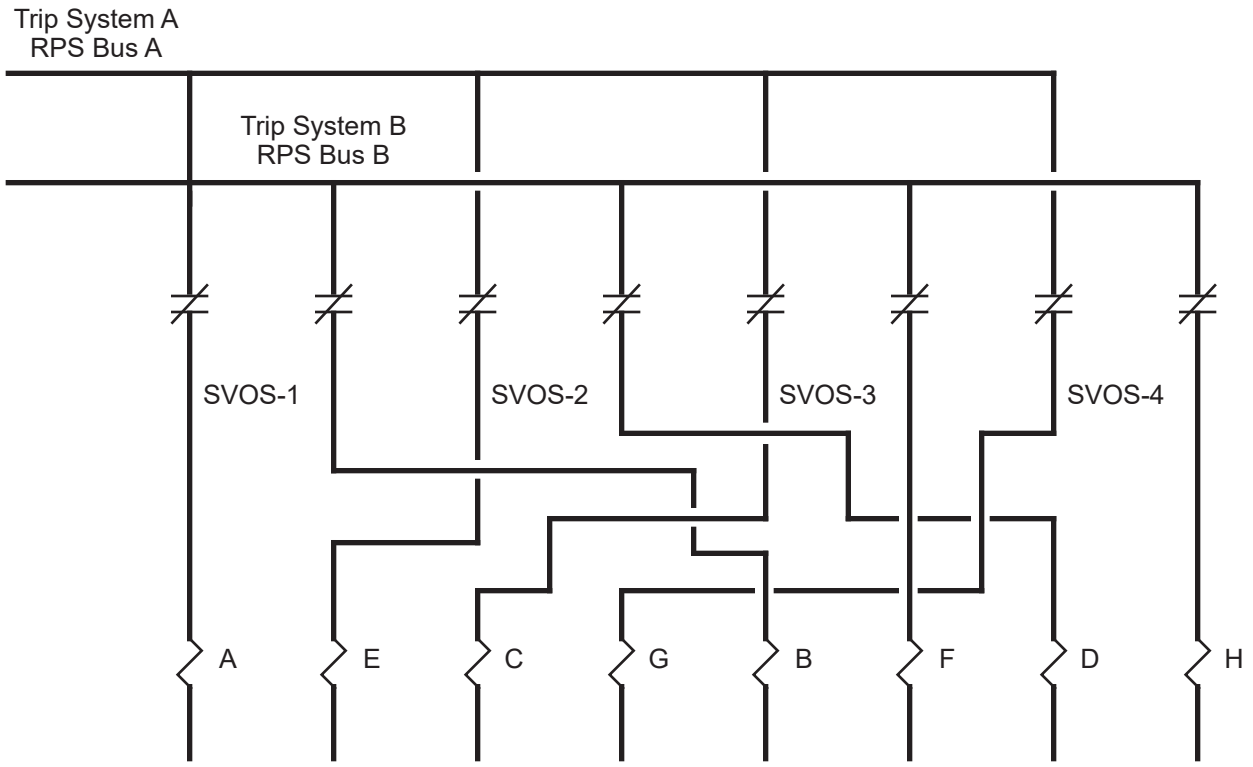

Turbine Stop Valve Closure Sensor Trip Channels

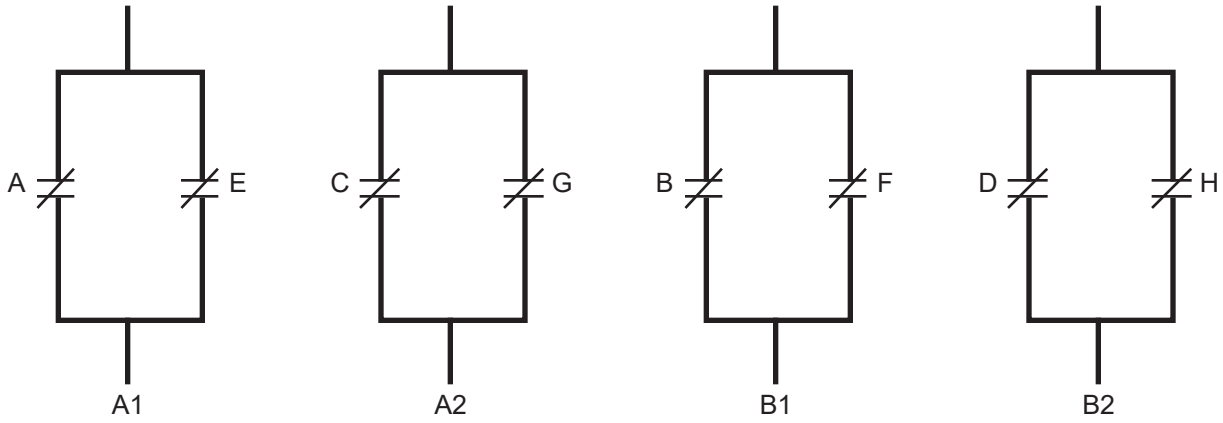

Reactor Protection System Trip Logics

Note: Contacts shown in normal condition (plant operation) position
Note: Three out of four stop valves must close to cause a scram

Columbia Generating Station Final Safety Analysis Report	Configuration for Turbine Stop Valve Closure Reactor Trip		
	Draw. No. 900547.24	Rev.	Figure 7.2-7

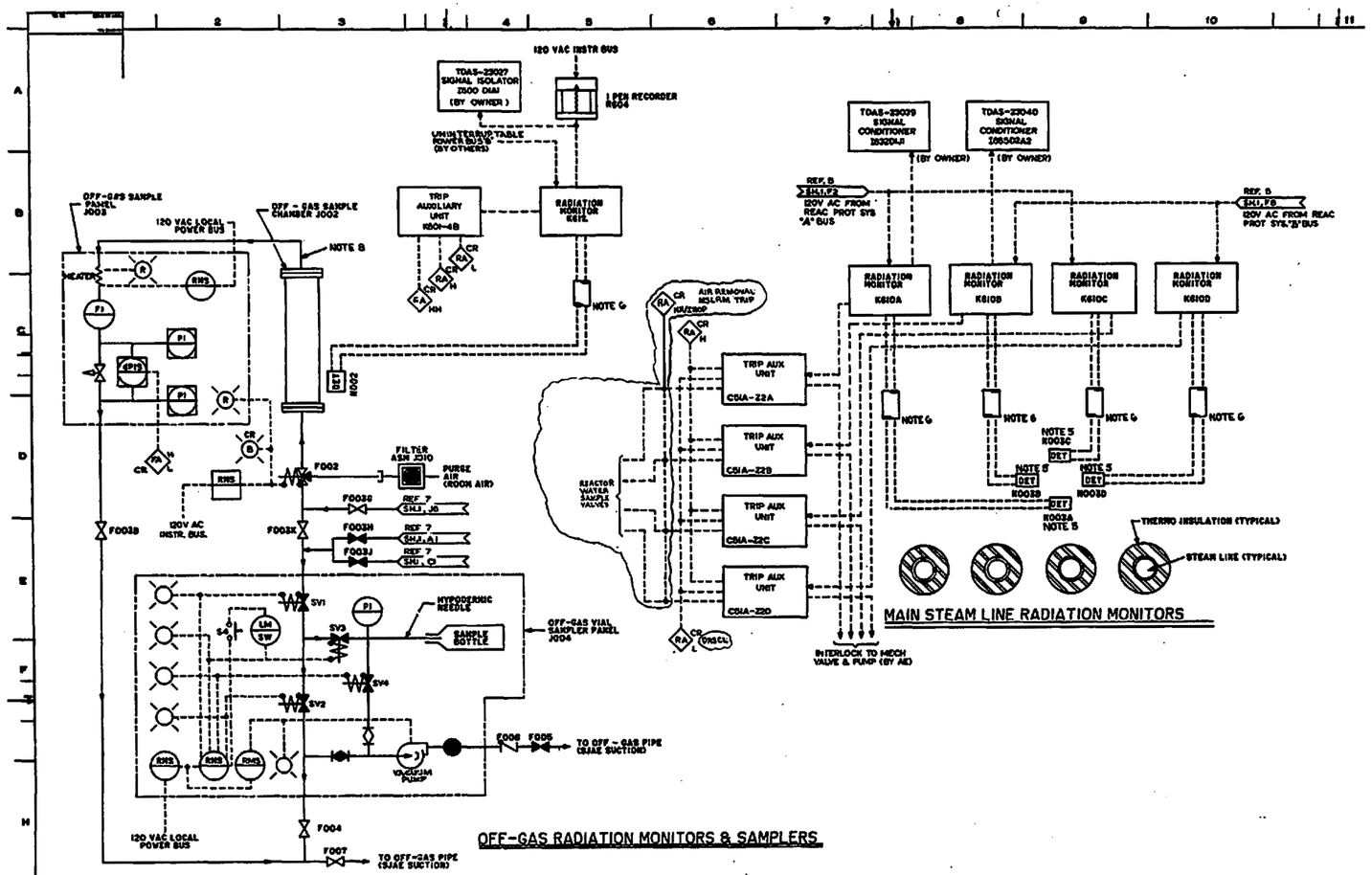

NOTES:

1. THE OFF GAS VENT PIPE GAS SAMPLE LINE SHALL BE 1" X 0.065" WALL THICKNESS SEAMLESS STAINLESS STEEL TUBING. THE TUBING MIN BEND RADIUS SHALL BE 3D". THE TUBING LENGTH SHALL BE JOINED WITH SWAGELOK TYPE 1810-6-316 UNIONS. THE TUBING SHALL SLOPE SO THAT THE CONDENSATE WILL RUN TO DRAIN TEE.
2. A REMOVABLE SECTION SHALL BE PROVIDED NEAR THE ISOKINETIC PROBE FOR THE INSERTION OF A CHARCOAL FILTER HOLDER. THE FITTINGS ETC. SHALL PROVIDE SMOOTH TRANSITIONS WITHOUT DISCONTINUITIES OR REDUCING THE CROSS SECTIONAL AREA OF THE FLOW STREAM.
3. TEE SHALL BE UNION TEE SWAGELOK TYPE 1810-6-316.
4. ALARMS ARE ACTUATED BY RELAYS IN TRIP AUX. UNITS.
5. THE MAIN STEAM LINE RADIATION MONITOR DETECTORS (K003) SHALL BE LOCATED WITHIN THE STEAM LINE TUNNEL AS CLOSE AS PRACTICAL TO THE PRIMARY CONTAINMENT. THE DETECTORS SHALL BE ARRANGED SUCH THAT EACH DETECTOR WILL VIEW ALL STEAM LINES WITH APPROXIMATELY THE SAME RESPONSE. IT IS RECOMMENDED THAT THE DETECTOR OR DETECTOR ASSEMBLY BE FASTENED TO A ROD OR A PIPE AND INSERTED INTO SEALED PIPE WELLS FROM OUTSIDE THE STEAM TUNNEL. CARE-FULLY ROUTE CABLES TO MINIMIZE HEAT EXPOSURE. NO LEAD SHIELDING IS REQUIRED.
6. ALL CABLES SHALL COMPLY WITH GE ENGR. SPEC REF 3.
7. ADDITIONAL ALARM IN RADWASTE BLDG (RAM) RADWASTE MONITOR ONLY.
8. DRAIN AT THE LOWER POINT OF OFF GAS SAMPLE LINE. SAMPLE LINE SHALL HAVE 2 MINUTE TRANSIT TIME TO ALLOW FOR DECAY.
9. TWO OUT OF TWO HIGH HIGH RADIATION (RAHH) TRIP (CHANNELS A AND B) SHALL:
   -- SHUTDOWN AND ISOLATE (OUTBOARD VALVE) REACTOR BUILDING VENTILATION SYSTEM.
   TWO OUT OF TWO HIGH-HIGH RADIATION (RAHH) TRIP (CHANNELS C AND D) SHALL:
   -- SHUTDOWN AND ISOLATE (INBOARD VALVE) REACTOR BUILDING VENTILATION SYSTEM.
10. ONE HIGH HIGH RADIATION (RAHH) OR INOPERATIVE TRIP OUT OF TWO ON TRIP SYSTEM "A" AND ONE HIGH-HIGH RADIATION (RAHH) OR INOPERATIVE TRIP OUT OF TWO ON TRIP SYSTEM "B" SHALL:
    -- CLOSE REACTOR WATER SAMPLE VALVES.
    -- TURN OFF MECHANICAL VACUUM PUMP & CLOSE MECHANICAL VACUUM PUMP LINE VALVE.
    -- ANY ONE HIGH RADIATION TRIP (RAH) SHALL ALARM.
11. FOR LOCATION AND IDENTIFICATION OF INSTRUMENTS SEE INSTRUMENT DATA SHEET (ASME REP 60).
12. ANY ONE UPSCALE TRIP (RAH) SHALL CLOSE BYPASS LINE VALVE, OPEN TREATMENT LINE VALVE AND ALARM.
13. ISOLATE OFF-GAS SYSTEM OUTLET AND DRAIN VALVES AND ALARM (REF 9).
14. *SUPPLIED AND MOUNTED BY OTHERS.*
15. HIGH-HIGH RADIATION TRIP SHALL RESULT IN AN OPEN INHIBIT CIRCUIT.
16. EITHER HIGH OR HIGH-HIGH RADIATION TRIP SHALL RESULT IN AN OPEN CIRCUIT.
17. ANY ONE HIGH-HIGH (RAHH) OR DOWNSCALE (RAL) RADIATION TRIP SHALL ALARM.

REFERENCE DOCUMENTS:	NPL ITEM NO.
1. PIPING & INST. SYMBOLS	A42-1010
2. PROCESS RADIATION MONITORING DES. SPEC	D17-4010
3. SPECIAL WIRE & CABLE	A82-4010
4. RADWASTE SYSTEM P&ID	G11-1010
5. REACTOR PROTECTION SYS IED	C72-1010
6. NUCLEAR BOILER SYS FCD	B22-1030
7. OFF-GAS SYSTEM P&ID	N64-1010
8. OFF-GAS SYSTEM FCD	N64-1030
9. INST. DATA SH.	D17-3000

LEGEND:

SJAE	STEAM JET AIR EJECTOR
DET	DETECTOR
RAHHH	RADIATION ALARM HIGH HIGH HIGH
RAHH	RADIATION HIGH HIGH
RAH	RADIATION HIGH
RAL	DOWNSCALE OR INSTRUMENT TROUBLE (RADIATION ALARM LOW)
FAH/L	FLOW ALARM HIGH/LOW
SEL. SW	SELECTOR SWITCH

Columbia Generating Station Final Safety Analysis Report	Process Radiation Monitoring System (Recombiner/Charcoal Bed) - IED		
	Draw. No. 02D17-04,1,1	Rev. 11	Figure 7.2-8.1

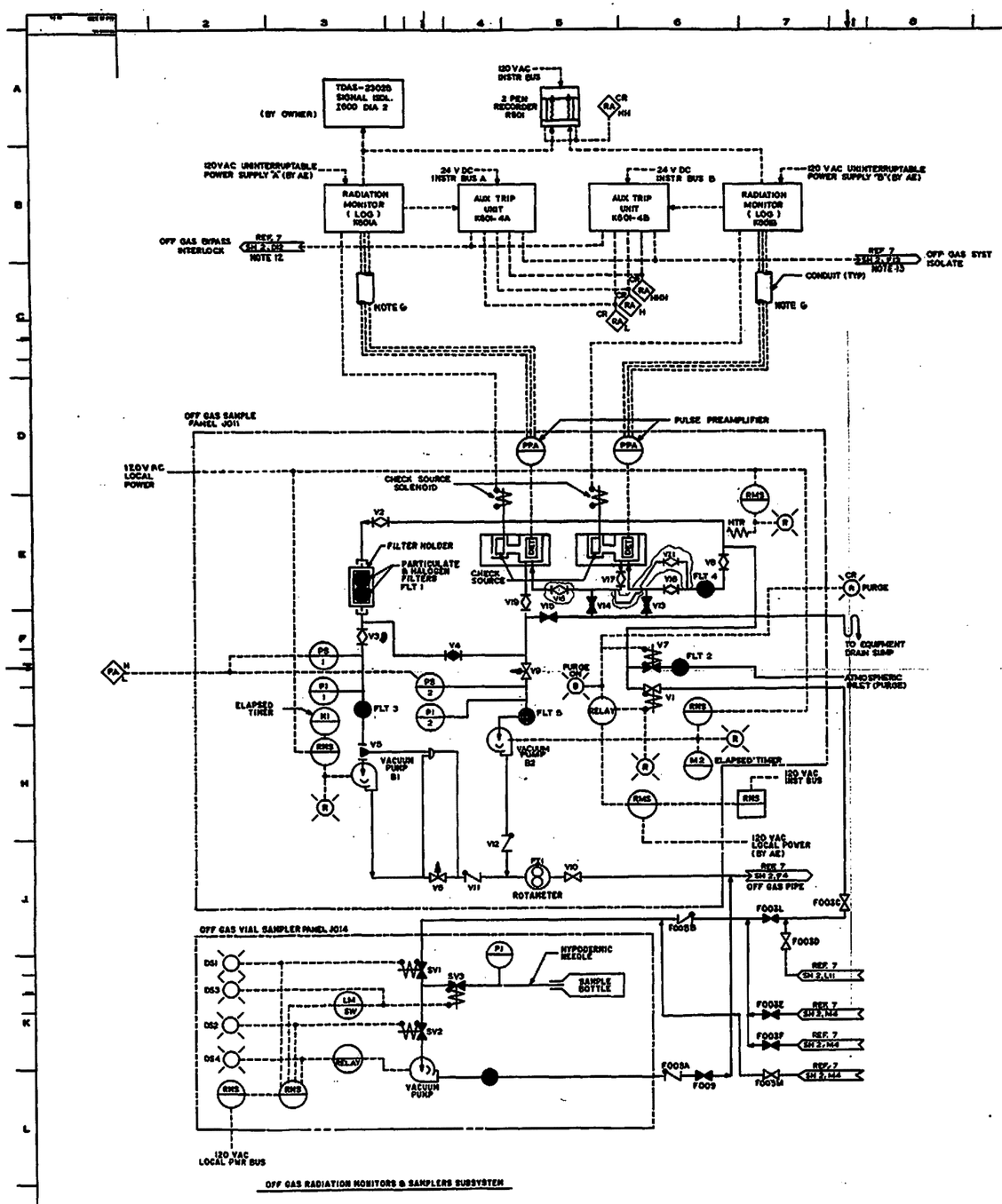

OFF GAS RADIATION MONITORS & SAMPLERS SUBSYSTEM

Columbia Generating Station Final Safety Analysis Report	Process Radiation Monitoring System (Recombiner/Charcoal Bed) - IED		
	Draw. No. 02D17-04,1,2	Rev. 10	Figure 7.2-8.2

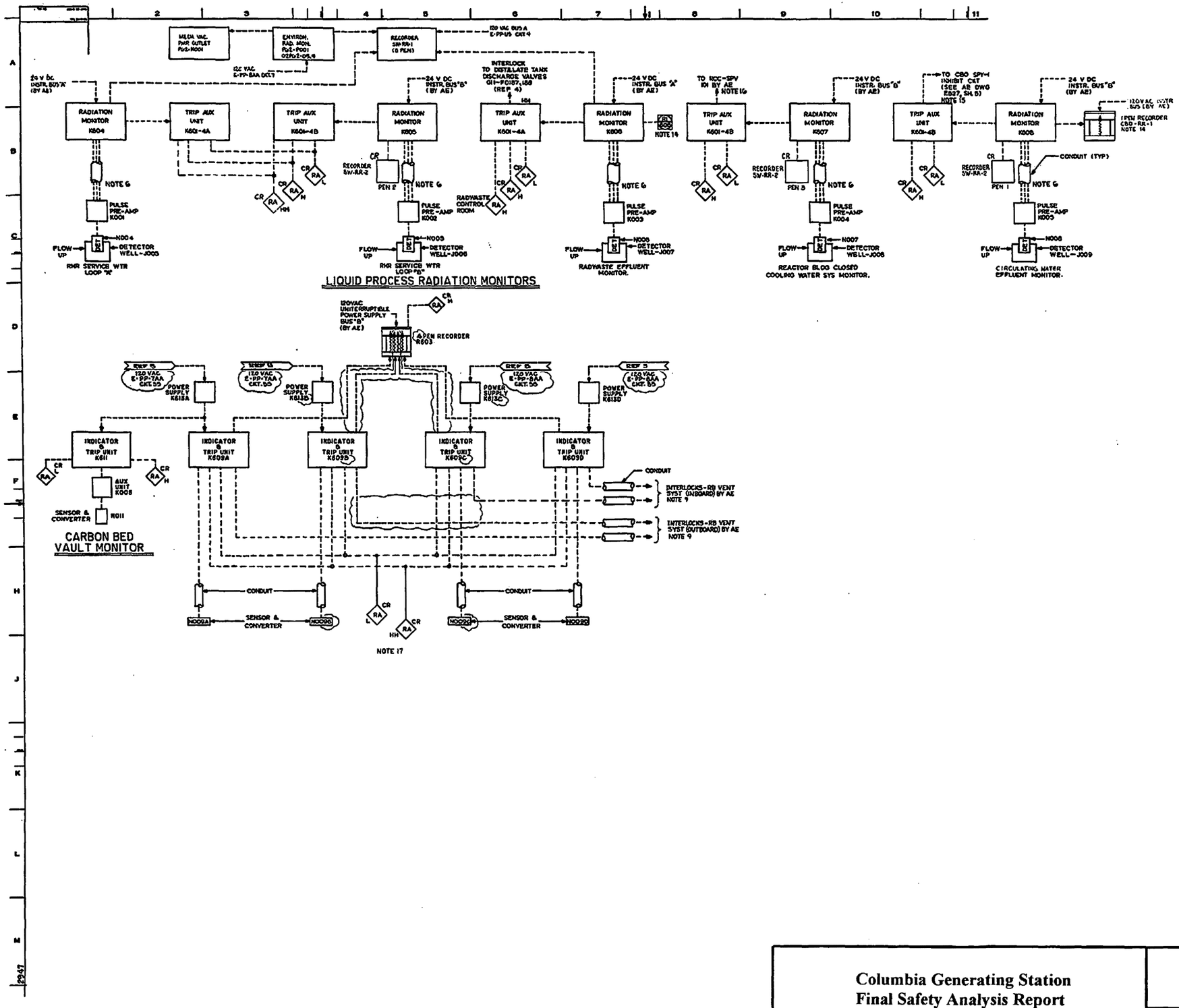

Columbia Generating Station Final Safety Analysis Report	Process Radiation Monitoring System (Recombiner/Charcoal Bed) - IED		
	Draw. No. 02D17-04,1,3	Rev. 14	Figure 7.2-8.3

Form No. 960690

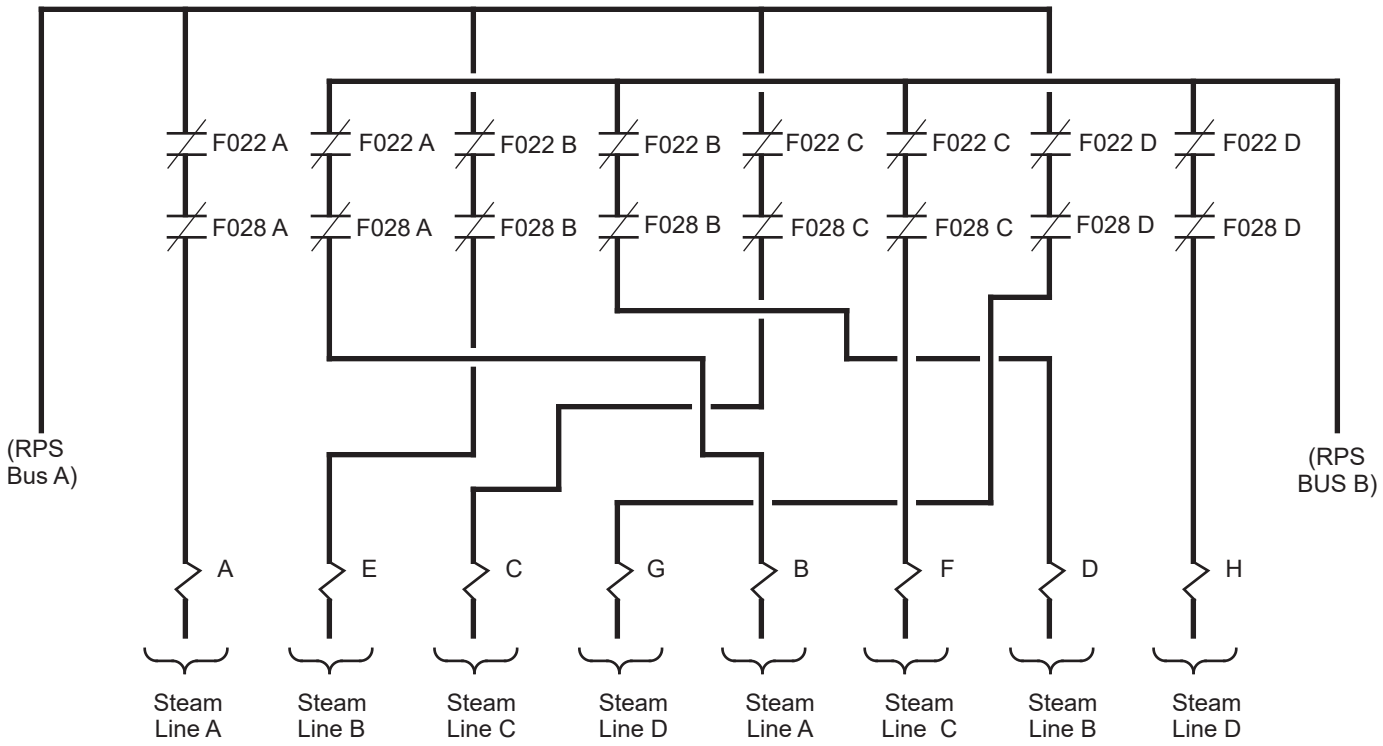

Main Steam Line Isolation Trip Sensor Channels See Notes Below
(Switch Contacts shown in Positions When
Isolation Valves Less than 10% Closed)

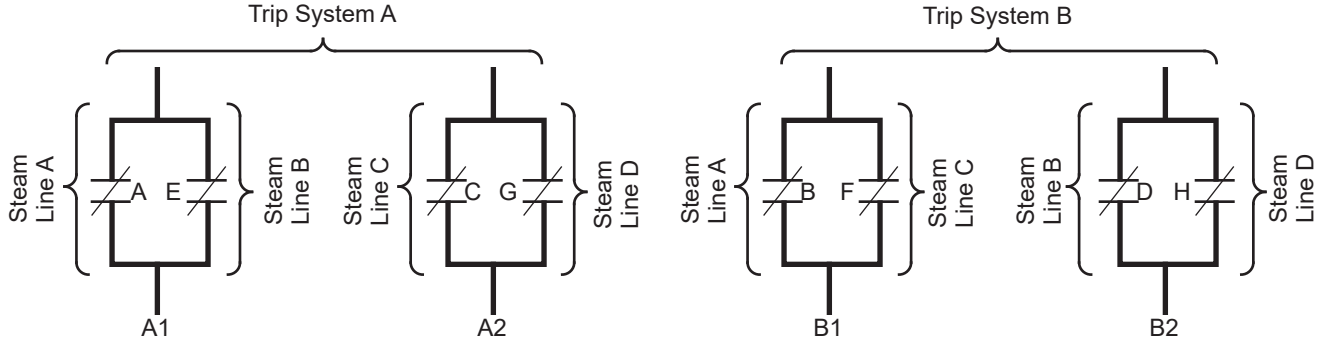

Reactor Protection System Trip Logics
(Contacts Shown in Normal (Plant Operation) Position)

Key

F022A - Steam Line A Inboard Valve
F028A - Steam Line A Outboard Valve
F022B - Steam Line B Inboard Valve
F020B - Steam Line B Outboard Valve
F022C - Steam Line C Inboard Valve
F028C - Steam Line C Outboard Valve
F022D - Steam Line D Inboard Valve
F028D - Steam Line D Outboard Valve

NOTE: 1. Wiring for the Two Switches on the Same Valve Is Physically Separated.
2. Isolation of Three or More Steam Lines Will Cause A Scram.

Columbia Generating Station Final Safety Analysis Report	**Configuration for Main Steam Line Isolation Reactor Trip**		
	Draw. No. 920843.53	Rev.	Figure 7.2-9

DELETED

Columbia Generating Station Final Safety Analysis Report	**LPRM Channel Arrangement in the Core and APRM Channel Assignments**		
	Draw. No. **920843.49**	Rev.	Figure **7.2-10.1**

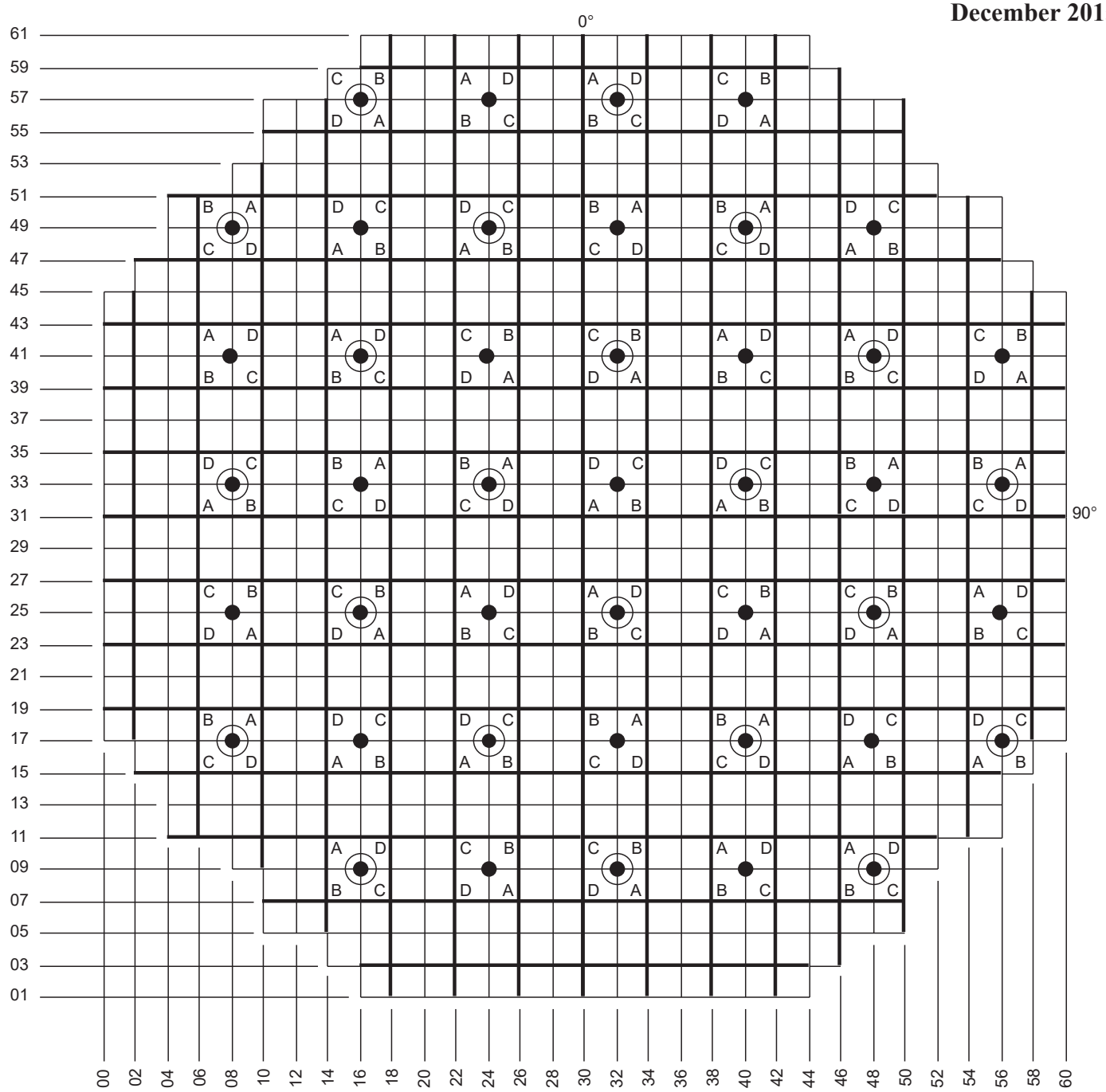

LPRM strings providing input to APRM channels 1, 2, 3, and 4
Upper left letter = input for APRM Channel 2
Lower left letter = input for APRM Channel 3
Lower right letter = input for APRM Channel 4
Upper right letter = input for APRM Channel 1

APRM System

Columbia Generating Station **Final Safety Analysis Report**	**LPRM Channel Arrangement in the Core and APRM Channel Assignments**		
	Draw. No. **920843.48**	Rev. **1**	Figure **7.2-10.2**

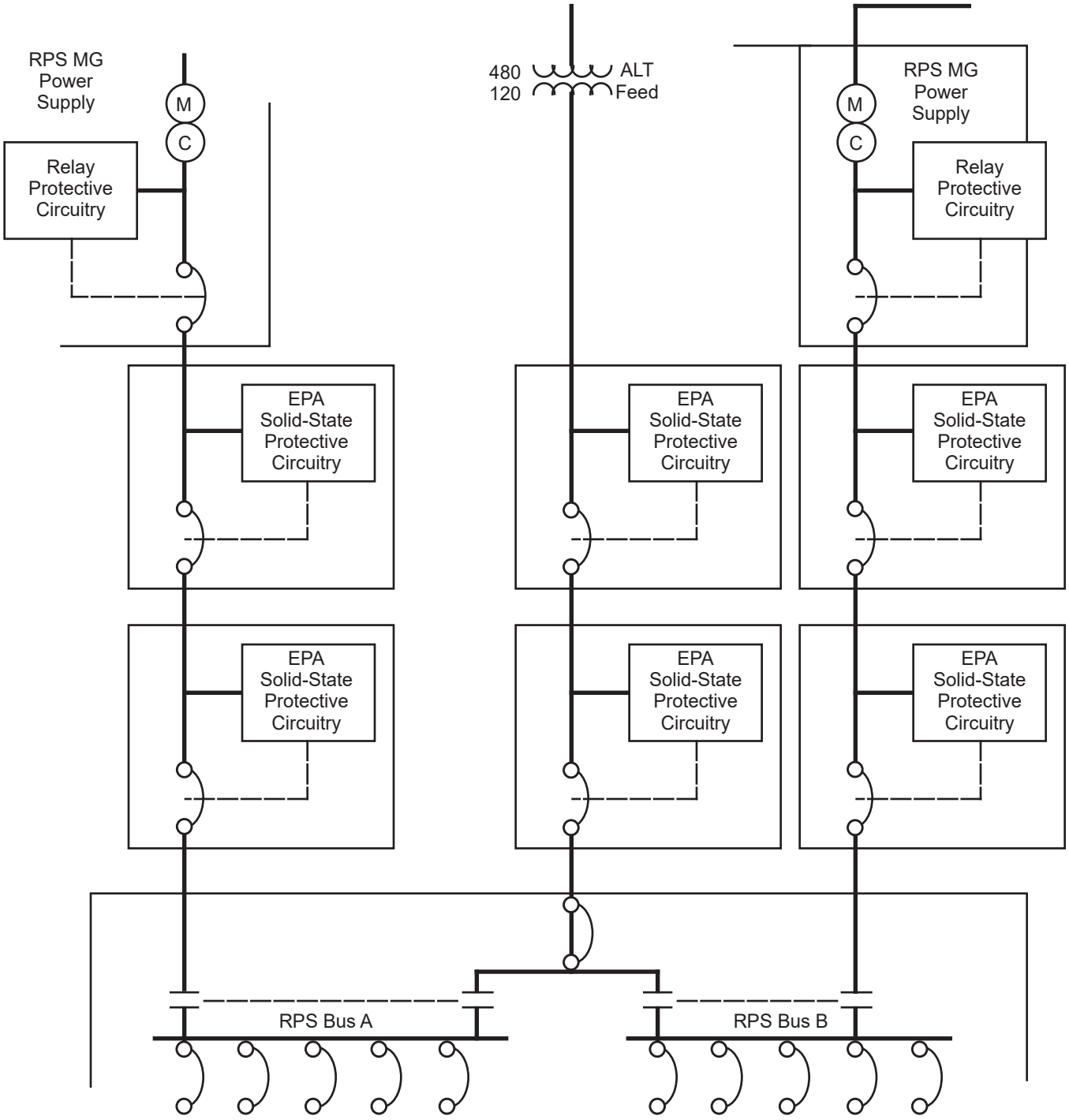

Columbia Generating Station Final Safety Analysis Report	Block Diagram - RPS Protective Circuit - Electrical Protection Assembly (EPA)		
	Draw. No. 920843.54	Rev.	Figure 7.2-11

7.3 ENGINEERED SAFETY FEATURE SYSTEMS

7.3.1 DESCRIPTION

The instrumentation and controls include the operation of the following engineered safety feature (ESF) systems (see Figures 7.3-1 through 7.3-15):

a. Emergency core cooling system (ECCS),

b. Primary containment and reactor vessel isolation control systems (PCRVICS),

c. Residual heat removal (RHR) system - containment spray cooling mode (CSCM),

d. RHR system - suppression pool cooling mode (SPCM),

e. Standby service water (SW) system,

f. Main control room and critical switchgear rooms heating, ventilating, and air conditioning (HVAC) system,

g. Reactor building ventilation and pressure control system,

h. Standby gas treatment system (SGT),

i. Containment instrument air (CIA) system, and

The sources which supply power to the ESF systems originate from onsite ac and/or dc safety-related buses or, as in the case of the PCRVICS fail safe logic, from safety-related Division 1 and 2 power and the non-safety-related reactor protection system (RPS) motor generator (MG) sets. See Chapter 8 for a complete discussion of the ESF systems power sources.

7.3.1.1 System Description

7.3.1.1.1 Emergency Core Cooling Systems

The ECCS is a network of the following systems. See Sections 6.3.1 and 6.3.2.

a. High-pressure core spray (HPCS) system,
b. Automatic depressurization system (ADS),
c. Low-pressure core spray (LPCS) system, and
d. Low-pressure coolant injection (LPCI) mode of the RHR system.

The following plant variables are monitored and provide automatic initiation of the ECCS when these variables exceed predetermined limits:

a. Reactor vessel water level

A low water level in the reactor vessel could indicate that reactor coolant is being lost through a breach in the reactor coolant pressure boundary (RCPB) and that the core is in danger of becoming overheated as the reactor coolant inventory diminishes. See Figure 10.3-2 for a schematic arrangement of reactor vessel instrumentation.

b. Drywell pressure

High pressure in the drywell could indicate a breach of the RCPB inside the drywell and that the core is in danger of becoming overheated as reactor coolant inventory diminishes.

7.3.1.1.1.1 High-Pressure Core Spray System.

Function

The purpose of the HPCS is to provide high pressure reactor vessel core spray for a small line break loss-of-coolant accident (LOCA) which does not depressurize the reactor vessel. In addition HPCS is redundant to the ADS system for mitigation of the consequences of various events described in Chapter 15. The HPCS can provide core cooling or reactor vessel inventory makeup following accidents and various design basis transients described in Chapter 15. See also Section 6.3.2.2.1. The HPCS also provides for core cooling during a station blackout event.

Operation

Schematic arrangements of system mechanical equipment is shown in Figure 6.3-4. The HPCS system component control logic is shown in Figures 7.3-4 and 7.3-7. Instruments are listed in Table 7.3-1. Operator information displays are shown in Figures 7.3-7 and 7.3-4.

The HPCS is initiated automatically by either reactor vessel low water level (trip level 2) or drywell high pressure. The system is designed to operate automatically for at least 10 minutes without any actions required by the control room operator. Once initiated the HPCS logic seals-in and can be reset by the operator only when the initial conditions return to normal. See Figure 7.3-7 for a schematic representation of the HPCS system initiation logic.

Reactor vessel water level (trip level 2) is monitored by four redundant differential pressure switches. The switch contacts are arranged in a one-out-of-two twice logic arrangement to ensure that no single event can prevent the initiation of the HPCS.

Initiation diversity is provided by drywell pressure which is monitored by four redundant pressure switches. The switches are electrically connected in a one-out-of-two twice logic arrangement to ensure that no single instrument failure can prevent the initiation of the HPCS.

The HPCS components respond to an automatic initiation signal as follows (actions are simultaneous unless stated otherwise):

a. The HPCS diesel generator is signaled to start and its protective relays are bypassed. Once the diesel is started it signals its cooling water pump to start. See Section 6.3.1.1;

b. The HPCS pump motor is signaled to start;

c. The normally open pump suction valve from the condensate storage tank HPCS-V-1 (MO F001), is signaled to open;

d. The test return valve HPCS-V-23 (MO F023) is signaled to close; and

e. The HPCS injection valve HPCS-V-4 (MO F004) is signaled to open.

If the pump is running but discharge flow is low enough that pump overheating may occur, the minimum flow return line valve HPCS-V-12 (MO F012) is signaled to open. The valve is automatically closed if flow is normal.

If water level in the condensate storage tanks falls below a predetermined level, the suppression pool suction valve HPCS-V-15 (MO F015) automatically opens. When HPCS-V-15 (MO F015) is fully open the condensate storage tank suction valve HPCS-V-1 (MO F001) automatically closes. Two level switches mounted on a Seismic Category I standpipe in the reactor building are used to detect low water level in the condensate storage tanks. Either switch can cause automatic suction transfer. If the condensate supply line fails, the suction supply for HPCS-P-1 pump transfers to the suppression pool. Either of two instruments mounted on the supply line in the reactor building sense a low water level in the supply line as a broken pipe. The suppression pool suction valve also automatically opens if high water level is detected in the suppression pool. Two level switches monitor suppression pool water level and either switch can initiate opening of the suppression pool suction valve. To prevent losing suction to the pump, the suction valves are interlocked so that one suction path must be open before the other closes.

The HPCS provides makeup water to the reactor until the vessel water level reaches the high level trip (trip level 8) at which time the injection valve HPCS-V-4 (MO F004) is automatically closed. The pump will continue to run on minimum flow recirculation. The injection valve will automatically reopen if vessel level again drops to the low level (trip level 2) initiation point.

The HPCS pump motor and injection valve are provided with manual override controls. These controls permit the reactor operator to manually control the system following automatic initiation.

7.3.1.1.1.2 Automatic Depressurization System.

Function

The ADS is designed to provide automatic depressurization of the reactor vessel by activating seven safety/relief valves (SRVs). These valves vent steam to the suppression pool in the event the HPCS cannot maintain reactor water level following a LOCA. The ADS reduces reactor pressure so that flow from the low pressure ECCS, LPCI system and LPCS, can inject into the reactor vessel in time to cool the core and limit fuel cladding temperature. See also Section 6.3.2.2.2.

Operation

Schematic arrangements of system mechanical equipment is shown in Figure 10.3-2. The ADS component control logic is shown in Figure 7.3-8. Instruments are listed in Table 7.3-2. Operator information displays are shown in Figures 10.3-2 and 7.3-8.

The ADS is made up of two independent trip systems (A&B).

To prevent inadvertent actuation of the ADS, two channels of logic for each ADS trip system are used. Both channels must be activated to actuate ADS. See Figure 7.3-5 for a schematic representation of the ADS initiation logic.

One channel includes two differential pressure sensor inputs monitoring reactor vessel low water level (trip level 3 and trip level 1). The low water level trip (trip level 3) provides confirmation of a reactor vessel low water level condition. The other channel includes only a single reactor vessel low water level (trip level 1) input.

To ensure that adequate makeup water is available after the vessel has been depressurized each logic channel includes a pump discharge pressure permissive signal indicating RHR or LPCS system available for vessel water makeup. Any one of the three RHR pumps or the LPCS pump is sufficient to permit automatic depressurization.

After receipt of the initiation signals and a time delay, one or both of the two solenoid pilot air valves are energized. This allows pneumatic pressure from the accumulator to act on the air cylinder operator. Each ADS trip system timer can be reset manually to delay system initiation. If reactor vessel water level is restored by HPCS prior to the end of the time delay, ADS initiation will be prevented. Also, either or both ADS trip systems may be initially inhibited to eliminate resetting the timer.

The ADS trip system A actuates the "A" solenoid pilot valve on each ADS relief valve. Similarly, the ADS trip system B actuates the "B" solenoid pilot valve on each ADS relief valve. Actuation of either solenoid pilot valve causes the ADS valve to open and provide depressurization.

Two control switches (one for each trip system solenoid) are located in the main control room for each SRV associated with the ADS. Each switch controls one of the two solenoid pilot valves.

7.3.1.1.1.3 Low-Pressure Core Spray.

Function

The purpose of the LPCS is to provide low-pressure reactor vessel core spray following a LOCA when the vessel has been depressurized and vessel water level has not been restored by the HPCS. The LPCS is functionally diverse to the LPCI mode of the RHR system (see Section 6.3.2.2.3).

Operation

Schematic arrangements of system mechanical equipment is shown in Figure 6.3-4. The LPCS component control logic is shown in Figure 7.3-9. Instruments are listed in Table 7.3-3. Operator information displays are shown in Figure 7.3-9.

The LPCS is initiated automatically by either reactor vessel low water level and/or drywell high pressure. The system is designed to operate automatically for at least 10 minutes without any actions required by the control room operator. Once initiated the LPCS logic seals-in and can be reset by the control room operator only when the initial conditions return to normal. See Figure 7.3-9 for a schematic representation of the LPCS system initiation logic.

Reactor vessel water level (trip level 1) is monitored by two redundant differential pressure switches. To provide diversity drywell pressure is monitored by two redundant pressure switches. The vessel level switch contacts and the drywell pressure switch contacts are connected in a one-out-of-two twice logic arrangement so that no single instrument failure can prevent initiation of LPCS.

The LPCS components respond to an automatic initiation signal simultaneously (or sequentially as noted) as follows:

a. The Division 1 diesel generator is signaled to start,

b. The normally closed test return line to the suppression pool valve LPCS-V-12 (MO F012) is signaled closed,

c. If power from the normal auxiliary or backup transformer is available at the pump motor bus, the LPCS pump is signaled to start. If the startup transformer is supplying the pump motor buses, sequential starts of ECCS pumps are required to prevent excessive voltage drops on the buses. This is accomplished by delaying the start of LPCS pump by 9.5 sec.

d. Reactor pressure is monitored by a pressure switch which senses the reactor vessel pressure. When the reactor vessel pressure is low enough to protect the LPCS from over-pressure and power is available to the pump motor bus, the injection valve is signaled to open.

The LPCS pump discharge flow is monitored by a flow indicating switch. When the pump is running and discharge flow is low enough that pump overheating may occur, the minimum flow return line valve LPCS-FCV-11 (MO F011) is opened. The valve is automatically closed if flow is normal.

The LPCS pump suction from the suppression pool valve LPCS-V-1 (MO F001) is normally open, the control switch is key locked in the open position, and thus requires no automatic open signal for system initiation.

The LPCS pump and injection valve are provided with manual override controls. These controls permit the operator to manually control the system subsequent to automatic initiation.

7.3.1.1.1.4 Residual Heat Removal System - Low Pressure Coolant Injection Mode.

Function

Low-pressure coolant injection is an operating mode of the RHR system. The purpose of the LPCI system is to provide low-pressure reactor vessel coolant makeup following a LOCA when the vessel has been depressurized and vessel water level is not restored by the HPCS (see Section 6.3.2.2.4).

Operation

Schematic arrangements of system mechanical equipment is shown in Figure 5.4-15. The LPCI component control logic is shown in Figure 7.3-10. Instruments are listed in Table 7.3-4. Operator information displays are shown in Figures 7.3-10 and 5.4-15.

The LPCI system is initiated automatically by either reactor vessel low water level or drywell high pressure (one-out-of-two-twice logic). The system is designed to operate automatically for at least 10 minutes without any actions required by the control room operator. Once initiated, the LPCI logic seals-in and can be reset by the control room operator only when initial conditions return to normal. See Figure 7.3-10 for a schematic representation of the LPCI initiation logic. To provide diversity, reactor vessel water level (trip level 1) and drywell pressure are monitored by two redundant differential pressure switches.

To initiate the Division 2 LPCI (loops B and C) the vessel level switch contacts and the two drywell pressure switch contacts are connected in a one-out-of-two-twice arrangement so that no single instrument failure can prevent initiation of LPCI.

The Division 1 LPCI (loop A) receives its initiation signal from the LPCS logic.

The LPCI system components respond to an automatic initiation signal simultaneously (or sequentially as noted) as follows (the loop A components are controlled from the Division 1 logic; the loop B and C components are controlled from the Division 2 logic):

a. The Division 2 diesel generator is signaled to start from the loop B and C initiation logic;

b. If offsite power is not available and the diesel generators are supplying the pump motor buses, sequential loading of the diesel generators is required. This is accomplished by delaying the start of LPCI pumps A and B by 5 sec while allowing the LPCS and LPCI C pumps to start immediately. The same start sequence is maintained for the LPCS and LPCI pumps when the pump motor buses are supplied from the normal auxiliary or backup transformer. If the startup transformer is supplying the pump motor buses, sequential starts of ECCS pumps are required to prevent excessive voltage drops on starting. This is accomplished by delaying the start of LPCS and LPCI C pumps by 9.5 sec and delaying LPCI A and B pump starts by 19.4 sec;

c. Reactor pressure is monitored by a pressure switch for each LPCI injection valve RHR-V-42A, RHR-V-42B, and RHR-V-42C (MO FO42A, B, C). When the reactor pressure is low enough to protect the LPCI from overpressure and power is available at the associated pump motor bus, the injection valve is signaled to open;

d. The following normally closed valves are signaled closed to ensure proper system lineup:

1. The test return line to the suppression pool valves RHR-V-24A, RHR-V-24B (MO F024 A, B), RHR-V-21, and

2. The suppression pool spray valves RHR-V-27A and RHR-V-27B (MO F027 A, B).

e. The normally open heat exchanger bypass valves RHR-V-48A and RHR-V-48B (MO F048 A, B) are signaled open. The open signal is automatically removed 10 minutes after system initiation to allow operator control of the valve for throttling purposes if cooling using RHR heat exchangers is required.

The flow in each LPCI discharge line is monitored when the pump is running. Whenever the discharge flow is below the minimum flow setpoint, the respective minimum flow valve RHR-FCV-64A, RHR-FCV-64B, or RHR-FCV-64C (MO F064A, B or C) will automatically start to open in approximately 8 sec, to prevent pump overheating. The valve is automatically closed if the flow is above the minimum flow setpoint. The time delay is provided to limit reactor vessel inventory loss during the shutdown cooling mode of the RHR system (see Section 5.4.7.2.6).

The three RHR pump suction from the suppression pool valves RHR-V-4A, RHR-V-4B, RHR-V-4C (MO F004 A, B, C) and the RHR heat exchanger inlet valves RHR-V-47A, RHR-V-47B, (MO F047 A, B) which are locked open (with power removed) and outlet valves RHR-V-3A, RHR-V-3B (MO F003 A, B) have their control switches in the open position, and thus require no automatic open signal for system initiation.

The two series SW crosstie valves RHR-V-115 (MO F094) and RHR-V-116 (MO F093) have their control switches key locked in the close position, and thus require no automatic close signal for system initiation.

The two series containment spray valves RHR-V-16A, RHR-V-16B, (MO F016 A, B) and RHR-V-17 and RHR-V-17B (MO F017 A, B), the two series RHR heat exchanger vent valves RHR-V-73A, RHR-V-73B, RHR-V-74A, and RHR-V-74B (MO F073 A, B and MO F074 A, B), and the RHR shutdown cooling mode suction valves RHR-V-6A and RHR-V-6B (MO F006 A, B) are all normally closed and thus require no automatic close signal for system initiation.

The LPCI pump motors and injection valves are provided with manual override controls. These controls permit the operator to manually control the system subsequent to automatic initiation.

7.3.1.1.2 Primary Containment and Reactor Vessel Isolation Control System (PCRVICS)

Function

The PCRVICS includes the instrument channels, trip logic, and actuation circuits that automatically initiate valve closure providing isolation of the primary containment and/or reactor vessel, and initiation of systems provided to limit the release of radioactive materials.

See Section 6.2.4 and Table 6.2-16 for a complete description of primary containment and reactor vessel process lines and isolation signals applied to each.

Operation

Schematic mechanical arrangements of containment isolation valves and other components initiated by PCRVICS are shown in Figures 5.4-15, 10.3-2, 5.4-7, 5.4-11, 5.4-22, 9.3-9, 9.3-12, and 3.2-2. The PCRVICS component control logic is shown in Figures 7.3-1, 7.3-8, 7.3-10 and 7.4-1. Instruments are listed in Table 7.3-5. Operator information displays are shown on these figures.

During normal plant operation, the isolation control system sensors and trip logic that are essential to safety are energized. When abnormal conditions are sensed, instrument contacts open and deenergize the trip logic and thereby initiate isolation. Once initiated, then the PCRVICS trip logic seals-in and may be reset by the operator when the initiating conditions return to normal.

The PCRVICS trip logic provides isolation signals to the main steam line isolation valves (MSIVs) MS-V-22A, MS-V-22B, MS-V-22C, MS-V-22D (AO F022 A, B, C, D) and MS-V-28A, MS-V-28B, MS-V-28C, MS-V-28D (AO F028 A, B, C, D); to the main steam line drain valves MS-V-16 (MO F016), MS-V-67A, MS-V-67B, MS-V-67C, MS-V-67D (F067 A, B, C, D), and MS-V-19 (MO F019); to the reactor water sample valves RRC-V-19 (MO F019) and RRC-V-20 (F020); to the RHR shutdown cooling system valves RHR-V-8 (MO F008), RHR-V-9 (F009), RHR-V-23 (F023), RHR-V-40 (F040), RHR-V-49 (F049), RHR-V-53A, RHR-V-53B (F053 A, B), RHR-V-123A, RHR-123B (F099 A, B); to the reactor water cleanup (RWCU) system valves RWCU-V-1 (MO F001) and RWCU-V-4 (F004); to the drywell equipment drain valves EDR-V-19 (AO F019) and EDR-V-20 (F020); to the drywell floor drain valves FDR-V-3 (AO F003) and FDR-V-4 (F004); to the TIP system valves, TIP-V-1, TIP-V-2, TIP-V-3, TIP-V-4, TIP-V-5, and TIP-V-15; and to the RCIC system valves, RCIC-V-63 (MOF063), RCIC-V-8 (F008) and RCIC-V-76 (F076).

Each MSIV has two control solenoids. Each solenoid receives inputs from two redundant logic channels. A signal from either can deenergize the solenoid. For any one valve to close automatically, both of its solenoids must be deenergized.

The MSIV logic has a minimum of four redundant instrument channels for each measured variable. One channel of each variable is connected to one trip logic. One group of redundant logic (A, C) is used to control one solenoid of both inboard and outboard valves of all four main steam lines, and the other group of redundant logic (B, D) is used to control the other solenoid of both inboard and outboard valves. The four PCRVICS trip logic channels are arranged in a one-out-of-two twice logic combination (trip logic A or C and B or D). See Figure 7.3-2.

The main steam line drain valves, drywell equipment and floor drain valves, reactor water sample valves, the RWCU system, and RHR system isolation valves also operate in pairs. The outboard valves close if the Division 1 isolation logic (A and B) is tripped, and the inboard valves close if the Division 2 logic (C and D) is tripped. See Figure 7.3-3. The RCIC system isolation valves are initiated closed by the leak detection system signals listed in Section 7.3.1.2.1.d. See Figure 7.4-1.

The PCRVICS also provides signals to start the SGT, to remove nonessential loads from essential buses, and to isolate the reactor building ventilation system and the primary containment purge and vent system.

The following variables provide inputs to the PCRVICS logics for initiation of reactor vessel and drywell isolation, as well as the initiation or trip of other plant functions when predetermined limits are exceeded. Combinations of these variables, as necessary, provide initiation of various isolating and initiating functions as identified in Table 6.2-16 and described below.

7.3.1.1.2.1 Reactor Vessel Low Water Level. A low water level in the reactor vessel could indicate that reactor coolant is being lost through a breach in the RCPB and that the core is in danger of becoming overheated as the reactor coolant inventory diminishes.

Reactor vessel low water level initiates closure of various valves. The closure of these valves is intended to isolate a breach of the pipelines, conserve reactor coolant by closing off process lines, and limit the escape of radioactive materials from the primary containment through process lines that communicate with the primary coolant boundary or primary containment.

Three reactor vessel low water level isolation trip settings are used to complete the isolation of the primary containment and the reactor vessel. The first (and higher) reactor vessel low water level isolation trip (trip level 3) initiates closure of all RHR system isolation valves. The main steam lines are left open to allow the removal of heat from the reactor core. The second (and lower) reactor vessel low-low water level isolation trip (trip level 2) isolates the Group 2, 3, 4

and 7 primary containment isolation valves and also provides inputs to logic which trips or initiates other plant equipment.

The third (lowest) reactor vessel low-low-low water isolation trip (trip level 1) isolates the Group 1 primary containment isolation valves which include MSIVs and main steam line drain valves.

Reactor vessel low water level (Level 3) is monitored by four redundant differential pressure switches. Each provides a low water level input to one of the four PCRVICS trip logic.

Reactor vessel water low-low (Level 2) and low-low-low (Level 1) are monitored by four redundant differential pressure transmitters with dual trip units. Each trip unit provides a Level 2 or Level 1 input to the PCRVICS trip logic.

Diversity of trip initiation for pipe breaks inside of primary containment is provided by drywell high pressure sensors.

7.3.1.1.2.2 Drywell High Pressure. High pressure in the drywell could indicate a breach of the RCPB inside the drywell and that the core is in danger of becoming overheated as reactor coolant inventory diminishes.

Drywell pressure is monitored by four redundant pressure switches. Each switch provides an input to one of the four trip logic channels.

7.3.1.1.2.3 Main Steam Line - High Radiation. The main steam line radiation monitors sense the gross release of fission products from the fuel and initiates action to contain the released fission products.

Four redundant detectors monitor the gross gamma radiation from the main steam lines. Each provides an input to one of the four PCRVICS trip logic channels.

Each channel consists of a gamma-sensitive ion chamber and a log radiation monitor. Each log radiation monitor has three trip circuits. One upscale trip circuit is used to initiate closure of the reactor water sample valves, mechanical vacuum pump trip, gland seal condenser exhauster trip, and an isolation alarm. The second circuit is used for a high alarm and is set at a level below that of the upscale trip circuit. The third circuit is a downscale alarm. The inoperative condition actuates the isolation alarm and produces the same isolation described above for the upscale trip circuit.

7.3.1.1.2.4 Main Steam Line - Tunnel High Ambient Temperature or High Differential Temperature. A leak in a main steam line is indicated by a high ambient temperature or a high differential temperature for this area. The automatic closure of main steam line isolation and

drain valves prevents the excessive loss of reactor coolant and the release of a significant amount of radioactive material from the RCPB.

There are four main steam line high ambient temperature channels within the steam tunnel and four high differential temperature channels between the main steam line tunnel and the reactor building. These eight channels monitor and actuate main steam line isolation logic which is deenergized by high ambient or high differential temperature condition.

Diversity of trip initiation signals for the main steam line tunnel high ambient or high differential temperature is provided by main steam line high flow and steam line low pressure instrumentation.

7.3.1.1.2.5 Main Steam Line - High Flow. Main steam line high flow could indicate a breach in a main steam line. Automatic closure of isolation valves prevents excessive loss of reactor coolant and release of significant amounts of radioactive material from the RCPB.

Sixteen redundant differential pressure switches, four for each main steam line, monitor the main steam line flow. Four differential pressure switches for each main steam line provide inputs to each of the four trip logic channels.

When a significant increase in main steam line flow is detected, trip signals initiate closure of all main steam line isolation and drain valves.

7.3.1.1.2.6 Main Steam Line - Low Pressure. Low steam pressure at the turbine inlet while the reactor is operating could indicate a malfunction of the nuclear system pressure regulator in which the turbine governor valves or turbine bypass valves become fully open, thus causing rapid depressurization of the reactor vessel. From reduced power the rate of decrease of nuclear system saturation temperature could exceed the allowable rate of change of vessel temperature. A rapid depressurization of the reactor vessel while the reactor is near full power could result in undesirable differential pressures across the channels (around some fuel bundles) of sufficient magnitude to cause mechanical deformation of channel walls. Such depressurizations without adequate preventive actions could require thorough vessel analysis or core inspection prior to returning the reactor to power operation.

Four redundant pressure sensors, one for each main steam line, monitor main steam line pressure and each provides an input to one of the four trip logic channels.

When a significant decrease in main steam line pressure is detected, the PCRVICS initiates closure of all main steam line isolation and drain valves.

The main steam line low pressure trip is bypassed by the reactor mode switch in the shutdown, refuel, and startup modes of reactor operation. In the run mode, the low pressure trip function is active.

7.3.1.1.2.7 Reactor Building Ventilation Exhaust Radiation Monitor. There are four radiation monitors arranged in two sets of two channels each, (A, B) and (C, D), which make up the process radiation monitor (PRM) reactor building vent radiation monitor isolation system. Each channel has a trip signal output used for shutdown and isolation of the reactor building ventilation system, startup of the SGT, and trip and/or isolation of various other plant functions. The trip output is provided in response to either high radiation in the ventilation exhaust plenum (upscale trip) or instrument failure (downscale trip). The downscale trip also initiates an alarm to alert the operator to instrument trouble conditions. See Section 11.5 for additional details.

7.3.1.1.2.8 Reactor Water Cleanup System - High Differential Flow. High differential flow in the RWCU system could indicate a breach of the RCPB of the cleanup system. The flow at the inlet to the system is compared with the flow at the outlets of the system.

A differential flow signal is developed from the compared inlet-outlet flow signals and applied to the two (inboard or outboard) logic trip channels. When an increase in RWCU system differential flow is detected, the PCRVICS initiates closure of the RWCU system isolation valves. This isolation function is not credited in the accident analysis.

Diversity of trip initiation signals for RWCU system isolation is provided by instrumentation for reactor water level, differential flow, high blowdown flow, and ambient or differential temperature in RWCU equipment areas.

The RWCU system high differential flow trip is bypassed by an automatic timing circuit during normal RWCU system surges. This time delay bypass prevents inadvertent system isolations during system flow transients.

7.3.1.1.2.9 Reactor Water Cleanup System - Area High Ambient Temperature or High Differential Temperature. High temperature in the equipment room areas of the RWCU system could indicate a breach of the RCPB in the cleanup system.

Redundant ambient temperature or differential temperature sensors monitor the RWCU system area temperatures. When a significant increase in RWCU system area ambient or differential temperature is detected the PCRVICS initiates closure of RWCU system isolation valves.

The output trip signal of each sensor initiates a logic trip and closure of either the inboard or outboard RWCU system isolation valve.

Diversity of trip initiation signals for high differential temperature is provided by two pair of differential temperature elements and associated differential temperature switches. Each pair of temperature elements and its differential temperature switch are associated with one of two logic channels.

7.3.1.1.2.10 Reactor Water Cleanup System - High Blowdown Flow. High flow conditions in the RWCU blowdown to the main condenser or radwaste line is indicative of a high-energy line break condition. Flow in this line is monitored by two redundant flow sensors which measure flow at the same point and apply flow signals to the trip logic channels. One flow signal is provided to the inboard trip channel and one to the outboard trip channel.

When an increase in RWCU blowdown flow is detected, the PCRVICS initiates closure of the RWCU system isolation valves.

The high blowdown flow trip logic contains a time delay feature which prevents inadvertent system isolations due to normal flow transients.

7.3.1.1.2.11 Residual Heat Removal System - Area High Ambient Temperature or High Differential Temperature. High temperature in the equipment room areas of the RHR system could indicate a breach in the RCPB in the RHR system.

Redundant ambient temperature or redundant differential temperature sensors monitor the RHR system area temperatures. Half of the ambient and differential temperature sensors are associated with one trip logic. The remaining temperature channels are associated with the other trip logic. The ambient temperature elements are located in each RHR equipment area. The differential temperature elements are located in the ventilation supply and ventilation exhaust of RHR pump rooms A and B.

When an increase in RHR system area ambient temperature or differential temperature is detected, the PCRVICS initiates closure of the RHR system isolation valves.

The output trip signal of each sensor initiates a trip logic and closure of either the inboard or outboard RHR system isolation valve.

Diversity of trip initiation signals for RHR line break is provided by ambient temperature, differential temperature, and shutdown cooling flow instrumentation. An increase in ambient temperature, differential temperature, or flow will initiate RHR system isolation.

7.3.1.1.2.12 Residual Heat Removal System - Flow Rate Monitoring. High flow in the RHR system suction line from the reactor vessel could indicate a breach in the RCPB in the RHR system.

Two redundant differential pressure switches, one for each trip logic, monitor the RHR shutdown cooling mode suction line. The output trip signal of each sensor initiates a logic trip and closure of either the inboard or outboard RHR system isolation valve. The RHR suction high flow trip is not credited within the Columbia Generating Station (CGS) accident analysis.

7.3.1.1.2.13 Main Condenser Vacuum Trip. The main turbine condenser low vacuum signal could indicate a leak in the condenser. Initiation of automatic closure of various valves will prevent excessive loss of reactor coolant and the release of significant amounts of radioactive material.

Four redundant vacuum switches monitor the main condenser vacuum. Each switch provides an input to one of four trip logic channels.

When a significant decrease in main condenser vacuum is detected, the PCRVICS initiates closure of all main steam line isolation and drain valves.

Main condenser low vacuum trip can be bypassed manually when the turbine throttle valve is less than 90% open and reactor pressure is below 1060 psig.

7.3.1.1.2.14 Reactor Core Isolation Cooling System Isolation Signals. The RCIC isolation signals for RCIC steam line high flow and RCIC pipe routing/equipment area high ambient temperature or high differential temperature are a subset of the RCIC leak detection system and are described in Section 7.6.1.3.4.

7.3.1.1.3 DELETED

7.3.1.1.4 Residual Heat Removal System - Containment Spray Cooling Mode

Function

The CSCM is an operating mode of the RHR system. It is designed to condense steam in the suppression chamber air volume and/or the drywell atmosphere following a LOCA. See Section 5.4.7. The drywell spray (with or without the RHR heat exchangers) is used to remove airborne radioactivity from the containment atmosphere in response to a LOCA. Drywell sprays are started within the first 15 minutes post-LOCA.

Operation

The RHR system control logic is shown in Figure 7.3-10. Instruments are listed in Table 7.3-7. Operator information displays are shown in Figure 7.3-10.

The CSCM is initiated by the control room operator by diverting RHR flow to either the suppression pool or the drywell by opening valves RHR-V-27A, RHR-V-27B (MO F027A, B) or RHR-V-16A, RHR-V-16B (MO F016A, B), and RHR-V-17A, RHR-V-17B (MO F017A, B).

The following conditions must exist before the operator can initiate the drywell spray cooling loop:

a. The LOCA signal which automatically initiated LPCI must still exist;

b. One of the two redundant drywell pressure switches must indicate high pressure; and

c. The operator must close the LPCI injection valve RHR-V-42A, RHR-V-42B (MO F042A, B).

7.3.1.1.5 Residual Heat Removal System - Suppression Pool Cooling Mode

Function

The SPCM is an operating mode of the RHR system. It is designed to prevent suppression pool temperature from exceeding predetermined limits following a reactor blowdown of the ADS or SRVs. The SPCM mode is also used during RCIC operation and SRV testing.

Operation

Component control logic is shown in Figure 7.3-10. Instruments are listed in Table 7.3-8. Operator information displays are shown in Figure 7.3-10.

The SPCM is initiated by the control room operator either during normal plant operation or following a LOCA when the suppression pool temperature monitoring system (see Section 7.6) indicates that pool temperature may exceed a predetermined limit.

During normal plant operation the operator initiates the SPCM as follows:

a. The RHR pump (A or B) is started. The standby SW pump is started and the RHR heat exchanger SW discharge valve RHR-V-68A, RHR-V-68B (MO 0068 A, B) is signaled to open automatically when the SW pump starts.

b. The RHR test return line valve RHR-V-24A, RHR-V-24B (MO F024 A, B) is opened.

c. The RHR heat exchanger inlet valves RHR-V-47A, RHR-V-47B (MO F047 A, B) are locked open (with power removed) and outlet valves RHR-V-3A, RHR-V-3B (MO F003 A, B) are throttled as necessary. The heat exchanger bypass valve RHR-V-48A, RHR-V-48B (MO F048 A, B) and valve RHR-V-24A, RHR-V-24B (MO F024 A, B) are throttled as necessary.

Subsequent to a LOCA the operator initiates the SPCM as follows:

a. Once reactor vessel water level has been restored, the LPCI flow must be terminated by closing the LPCI injection valve RHR-V-42A, RHR-V-42B (MO F042 A, B). Closing the injection valve causes the LOCA initiation logic to be overridden and allows operator control of the system;

b. The RHR test return line valve RHR-V-24A, RHR-V-24B (MO F024 A, B) control logic also has LOCA signal override provisions. This allows the operator to open the valve; and

c. The RHR heat exchanger inlet valves RHR-V-47A, RHR-V-47B (MO F047 A, B) are locked open (with power removed) and outlet valves RHR-V-3A, RHR-V-3B (MO F003 A, B) are throttled as necessary. The heat exchanger bypass valve RHR-V-48A, RHR-V-48B (MO F048 A, B) (a 10-minute timer keeps this valve open following a LOCA) and valve RHR-V-24A, RHR-V-24B (MO F024 A, B) are throttled as necessary.

7.3.1.1.6 Standby Service Water System

Function

The SW system provides cooling water to the diesel generators, the RHR heat exchangers, the HPCS, RCIC, LPCI, and LPCS auxiliary equipment (e.g., room cooler, pump motor bearing cooler, pump seal cooler), and the essential HVAC chillers. See Section 9.2.

Operation

Schematic arrangements of system mechanical equipment is shown in Figure 9.2-12. The SW component control logic is shown in Figure 7.3-12. Instruments are listed in Table 7.3-9. Operator information displays are shown in Figures 7.3-12 and 9.2-12.

The SW system is automatically initiated as follows:

a. The Division 1 SW pump P-1A is started automatically when either the RHR A pump, the LPCS pump, or the Division 1 diesel generator is started,

b. The Division 2 SW pump P-1B is started automatically when either the RHR B pump, RHR C pump, the Division 2 diesel generator, or the RCIC pump is started, and

c. The HPCS SW pump HPCS-P-2 (C002) is automatically started when the HPCS diesel generator is started.

Once the SW pumps are started the following occurs:

a. The RHR heat exchanger SW discharge valves RHR-V-68A and RHR-V-68B are signaled open, and

b. After the SW pumps discharge pressure exceeds a minimum value the pump discharge valves SW-V-2A, SW-V-2B, and SW-V-29 are signaled to open.

7.3.1.1.7 Main Control Room and Critical Switchgear Rooms Heating, Ventilating, and Air Conditioning System

Schematic arrangements of system mechanical equipment are shown in Figure 9.4-1. Component control logic is shown in Figure 7.3-13. Instruments are listed in Table 7.3-10. Operator information displays are shown in Figure 9.4-1 and Figure 7.3-13.

For a complete description of the main control room and critical switchgear rooms HVAC instrumentation and controls see Section 9.4.1.

7.3.1.1.8 Standby Gas Treatment System

Schematic arrangements of system mechanical equipment are shown in Figure 3.2-2. The SGT component control logic is shown in Figure 7.3-14. Instruments are listed in Table 7.3-11. Operator information displays are shown in Figure 3.2-2 and Figure 7.3-14.

For a complete description of the SGT instrumentation and controls see Section 6.5.1.

7.3.1.1.9 Reactor Building Ventilation and Pressure Control System

Function

The reactor building ventilation and pressure control system automatically maintains the reactor building or secondary containment at a negative pressure below atmospheric pressure by controlling the reactor building exhaust or SGT fan units. See Section 9.4.2.

Operation

Schematic arrangements of system mechanical equipment are shown in Figure 9.4-2. System component control logic is shown in Figure 7.3-14. Instruments are listed in Table 7.3-12. Operator information displays are shown in Figure 9.4-2 and Figure 7.3-14.

The differential pressure is monitored by eight redundant differential pressure transmitters, four in Division 1 and four in Division 2, which measure the differential pressure across the

exterior of four sides of the reactor building to inside the reactor building (572 ft el.). The signal indicating the least differential pressure from the four differential pressure transmitters in one division is selected and is used to control the position of the blades of the normal reactor building exhaust fan unit in that division. On the initiation of the SGT by containment isolation signals high drywell pressure, low reactor water level, or reactor building exhaust high radiation, the reactor building pressure control system then controls the secondary containment pressure by controlling the SGT fan units (see Section 6.5.1).

7.3.1.1.10 Containment Instrument Air System

Function

The purpose of the CIA system is to provide clean, dry, pressurized gas to the main steam relief valves and isolation valves inside primary containment. The pressurized nitrogen or air is normally provided by a non-safety-related source to a single header which delivers the operating gas to the relief and isolation valves. Under normal conditions, the non-safety-related source also provides working pressure to two headers which serve as the safety-related backup system for seven relief valves designated for the ADS function. However, a safety-related, bottled nitrogen source is available to maintain operating pressure to the seven divisionally separated ADS valves, in the event that the non-safety-related sources fail (see Figure 9.3-2).

In the event of failure of the non-safety-related portions of the system, which is indicated by low header pressure and detected by three pressure switches, the bottled nitrogen automatically maintains header pressure to the ADS valves. The non-safety-related portion of the system is isolated from the safety-related ADS portion upon receipt of the low header pressure signal. See Section 9.3.1.5.2.

The local stepping controller used for sequential nitrogen bottle opening is equipped with a local wheel index counter. A remote counter display is also located near the backup N_2 supply bottles inside of the reactor building (see Section 9.3.1.2.2). In addition, a low-header pressure alarm is provided to alert the operator to the loss of the ADS pneumatic supply.

Operation

Schematic arrangements of system mechanical equipment is shown in Figure 9.3-2. The CIA component control logic is shown in Figure 7.3-15. Instruments are listed in Table 7.3-13. Operator information displays are shown in Figures 7.3-15 and 9.3-2.

The CIA system is always in operation. The instrumentation and controls of the system perform the following functions:

a. Monitor CIA system header pressure,

b. Isolate the non-safety-related portion of system in the event of failure in this portion, and

c. Maintain CIA system header pressure in the event of item b by sequentially opening nitrogen bottles.

7.3.1.2 Design Basis

The ESF systems are designed to provide timely protection against the onset and consequences of conditions that threaten the integrity of the fuel barrier and the RCPB. Chapter 15 identifies and evaluates events that jeopardize the fuel barrier and RCPB. The methods of assessing barrier damage and radioactive material releases, along with the methods by which abnormal events are identified, are presented in Chapter 15.

7.3.1.2.1 Variables Monitored to Provide Protective Action

The following variables are monitored to provide protective actions by the ESF systems:

a. HPCS
   1. Reactor vessel low water level (trip level 2),
   2. Drywell high pressure;

b. ADS
   1. Reactor vessel low water level (trip level 3),
   2. Reactor vessel low water level (trip level 1);

c. LPCS and LPCI

   1. Reactor vessel low water level (trip level 1),
   2. Drywell high pressure;

d. PCRVICS

   1. Reactor vessel low water level (trip level 3),

   2. Reactor vessel low-low water level (trip level 2),

   3. Reactor vessel low-low-low water level (trip level 1),

   4. Main steam line high radiation,

   5. Main steam line tunnel high ambient or high differential temperature,

6. Main steam line high flow,

7. Main steam line low pressure,

8. Reactor building ventilation exhaust high radiation,

9. RWCU high differential flow or high blowdown flow,

10. RWCU pipe routing and equipment area high ambient temperature or high differential temperature,

11. RHR area high ambient temperature or high differential temperature,

12. RHR shutdown cooling suction high flow,

13. Main condenser low vacuum,

14. Drywell high pressure,

15. RCIC steam line high flow, and

16. RCIC pipe routing area high temperature, or equipment area high ambient temperature or high differential temperature;

e. DELETED;

f. CSCM - drywell high pressure,
- suppression chamber high pressure;

g. SPCM

1. Suppression pool temperature,
2. Drywell high pressure,
3. Reactor vessel low water level (trip level 1);

h. SW System - RHR, LPCS, RCIC, or diesel generator start;

i. Main control room and critical switchgear room HVAC

1. High room temperature;

j. Reactor building ventilation and pressure control - reactor building to fuel pool area differential pressure;

k. SGT

1. Reactor vessel low water level (trip level 2),
2. Drywell high pressure,
3. Reactor building ventilation high radiation;

l. CIA System - instrument air header low pressure;

The plant conditions which require protective action involving the ESF systems are described in Chapter 15.

7.3.1.2.2 Location and Minimum Number of Sensors

See the Technical Specifications for ESF systems, which identifies the minimum number of sensors to monitor safety-related variables. There are no sensors in the ESF systems which have a spatial dependence.

7.3.1.2.3 Prudent Operational Limits

Operational limits for each safety-related variable trip setting are selected with sufficient margin so that a spurious ESF system initiation is avoided. It is then verified by analysis that the release of radioactive materials, following postulated gross failures of the fuel or the nuclear system process barrier, is kept within acceptable bounds.

7.3.1.2.4 Margin

The margin between operational limits and the limiting conditions of operation of ESF systems are listed and the bases stated in the Technical Specifications.

7.3.1.2.5 Levels

Levels requiring protective action are specified in the Technical Specifications.

7.3.1.2.6 Range of Transient, Steady State, and Environmental Conditions

See Section 3.11 for environmental conditions. See Sections 8.2.1 and 8.3.1 for the maximum and minimum range of energy supply to ESF instrumentation and controls. All ESF instrumentation and controls are specified and purchased to withstand the effects of energy supply extremes.

7.3.1.2.7 Malfunctions, Accidents, and Other Unusual Events Which Could Cause Damage to Safety System

Chapters 3, 6, 9, 15, and Appendix F describe the following credible accidents and events: floods, storms, tornadoes, earthquakes, fires, LOCA, and pipe break outside containment. Each of these events is discussed below for the ESF systems.

7.3.1.2.7.1 Floods. The buildings containing ESF systems components have been designed to meet the probable maximum flood (PMF) at the site location. See Section 2.4. For a discussion of internal flooding protection see Sections 3.4.1.4.1.2, 3.4.1.5.2, and 3.6.

7.3.1.2.7.2 Storms and Tornadoes. The buildings containing ESF systems components have been designed to withstand meteorological events described in Section 3.3.

7.3.1.2.7.3 Earthquakes. The structures containing ESF systems components have been seismically qualified as described in Sections 3.7 and 3.8 and will remain functional during and following a safe shutdown earthquake (SSE). Seismic qualification of instrumentation and electrical equipment is discussed in Section 3.10.

7.3.1.2.7.4 Fires. To protect the ESF systems in the event of a postulated fire, the redundant portions of the systems are isolated by electrical separation barriers. If a fire were to occur within one of the sections or in the area of one of the panels, the ESF systems functions would not be prevented by the fire. The use of spatial separation and barriers ensures that even though some portion of the systems may be affected, the ESF systems will continue to provide the required protective action. A fire detection system using heat detectors and combustion product detectors is provided in Power Generation Control Complex (PGCC) floor sections and in panels containing ESF systems components mounted on these floor sections. A Halon fire suppression system is provided in the same areas.

7.3.1.2.7.5 LOCA. The ESF systems components functionally required during and/or following a LOCA have been environmentally qualified to remain functional as discussed in Section 3.11.

7.3.1.2.7.6 Pipe Break Outside Primary Containment. The ESF systems are designed and qualified to remain functional during and/or following these events. See Section 3.6.

7.3.1.2.7.7 Missiles. Protection for safety-related components is described in Section 3.5.

7.3.1.2.8 Minimum Performance Requirements

Minimum performance requirements for ESF instrumentation and controls are provided in the Technical Specifications.

7.3.1.3 Final System Drawings

Functional and architectural design differences between the PSAR and FSAR are listed in Table 1.3-8.

7.3.2 ANALYSIS

7.3.2.1 Engineered Safety Feature Systems - Instrumentation and Controls

Chapter 15 and Chapter 6 evaluate the individual and combined capabilities of the ESF systems.

The ESF systems are designed such that a loss of instrument air, plant load rejection, or turbine trip will not prevent the completion of the safety function.

7.3.2.1.1 Conformance to 10 CFR 50 Appendix A

The following provides information regarding conformance to those General Design Criteria (GDC) which apply specifically to the ESF systems. See Section 3.1 for a discussion of GDC which apply equally to all safety-related systems.

GDC 33

See Sections 7.3.1.1.1.1 and 3.1.2.4.4.

GDC 34

See Section 7.3.1.1.6 and 3.1.2.4.5.

GDC 35

See Sections 7.3.1.1.1, 7.3.1.1.6, and 3.1.2.4.6.

GDC 36, 37, 39, 40, 42, 43, 45, 46, and 61

See Section 7.3.2.1.3, Regulatory Guide 1.22.

GDC 38

See Sections 7.3.1.1.4, 7.3.1.1.5, and 7.3.1.1.6, and 3.1.2.4.9.

GDC 41

See Sections 7.3.1.1.8 and 3.1.2.4.12.

GDC 44

See Sections 7.3.1.1.6 and 3.1.2.4.15.

GDC 60 and 61

See Sections 7.3.1.1.8, 7.3.1.1.3, 3.1.2.6.1, and 3.1.2.6.2.

GDC 64

See Sections 7.3.1.1.2 and 7.3.1.1.8.

7.3.2.1.2 Conformance to IEEE Standards

The following provides information regarding conformance to IEEE 279-1971, Criteria for Protection Systems for Nuclear Power Generating Stations, which apply specifically to the ESF systems. See Section 7.1.2.3 for a discussion of IEEE standards which apply equally to all safety-related systems.

General Functional Requirement (IEEE 279-1971, paragraph 4.1)

The ESF systems that automatically initiate appropriate protective actions, whenever the parameters described in Section 7.3.1.2.1 reach predetermined limits, with precision and reliability assuming the full range of conditions and performance are discussed in Sections 7.3.1.2 and Chapter 15.

Single Failure Criterion (IEEE 279-1971, paragraph 4.2)

The ESF systems are not required to meet the single failure criterion on an individual system (division) basis. However, on a network basis, the single failure criteria does apply to ensure the completion of a protective function. Redundant sensors, wiring, logic, and actuated devices are physically and electrically separated such that a single failure will not prevent the protective function. See Section 8.3.1.4 for a discussion of the CGS separation criteria.

Quality Components (IEEE-279-1971, paragraph 4.3)

For a discussion of the quality of ESF system components and modules see Section 3.11.

Equipment Qualification (IEEE 279-1971, paragraph 4.4)

Vendor certification requires that the sensors associated with the ESF system variables, manual switches, and trip logic components located in mild environments perform in accordance with the requirements listed on the purchase specification as well as in the intended application. This certification, in conjunction with the existing field experience with these components in this application, will serve to qualify these components.

For a complete discussion of ESF equipment seismic and harsh environment qualification see Sections 3.10 and 3.11.

Channel Integrity (IEEE 279-1971, paragraph 4.5)

For a discussion of ESF systems channel integrity under extreme conditions described in Section 7.3.1.2, see Sections 3.10, 3.11, 8.2.1, and 8.3.1.

Channel Independence (IEEE 279-1971, paragraph 4.6)

The ESF systems channel independence is maintained through the application of the CGS separation criteria as described in Section 8.3.1.4.

Control and Protection Interaction (IEEE 279-1971, paragraph 4.7)

There are no ESF system and control system interactions.

Derivation of System Inputs (IEEE 279-1971, paragraph 4.8)

The ESF variables are direct measures of the desired variables requiring protective actions. See Sections 7.3.1.1.1 through 7.3.1.1.10.

Capability of Sensor Checks (IEEE 279-1971, paragraph 4.9)

See Section 7.3.2.1.3, Regulatory Guide 1.22.

Capability for Test and Calibration (IEEE 279-1971, paragraph 4.10)

See Section 7.3.2.1.3, Regulatory Guide 1.22.

Channel Bypass or Removal from Operation (IEEE 279-1971, paragraph 4.11)

During periodic tests of any one ESF system channel, a sensor may be valved out of service and returned to service under the administrative control procedures. Since only one sensor is valved out of service at any given time during the test interval, protective action capability for

ESF system automatic initiation is maintained through the remaining redundant instrument channels.

Operating Bypasses (IEEE 279-1971, paragraph 4.12)

The ESF systems contain the following operating bypasses.

The PCRVICS has two bypasses: (1) main steam line low pressure operating bypass which is imposed by means of the mode switch in the "startup" position (not in "run"). The mode switch cannot be left in this position above approximately 15% of rated power without initiating a scram. Therefore, the bypass is removed by placing the mode switch in the "run" position via the normal reactor operating sequence, and (2) the low condenser vacuum bypass which is imposed by means of four manual bypass switches in conjunction with closure of the turbine throttle valves, the reactor mode switch in any position other than "run," and reactor pressure below the low-pressure setpoint. Bypass removal is accomplished automatically by the opening of the turbine throttle valves or raising reactor pressure above the interlock pressure setpoint or manually by placing any of the four bypass switches in normal position or by placing the mode switch in the "run" position.

Indication of Bypasses (IEEE 279-1971, paragraph 4.13)

For a discussion of bypass and inoperability indication see Section 7.1.2.4, Regulatory Guide 1.47.

Access to Means for Bypassing (IEEE 279-1971, paragraph 4.14)

Access to means of bypassing any safety action or safety function is under the administrative control of the control room supervisor/shift manager. Other approved methods of controlling access to bypasses are also used. These include key locks with administrative control of the access to keys, procedurally controlled equipment lineups, e.g., locked valve checklists, and the use of mechanical locking devices and annunciators and other indications, e.g., BISI (Regulatory Guide 1.47, Bypass and Inoperable Status Indication for Nuclear Power Plant Safety Systems, described in Section 7.1.2.4). These additional methods help to prevent inadvertent bypasses or to alert the plant operators to safety function bypasses occurring either from equipment failures or from manually induced bypasses that result as part of testing, maintenance, or equipment repair activities.

Key-locked control switches that provide a means of controlling the access to a safety function bypass are designed to allow key removal only in the "safe" or "accident" positions. Access to the associated keys is procedurally controlled. When not in use, keys are under the administrative control of the control room supervisor/shift manager and stored in a key locker. The keys are audited once per day by the control room supervisor/shift manager. When operation of a key-locked control switch is required to be immediate, such as in the case of the

reactor mode switch, the key may be left in the lock during normal plant operation to ensure timely actuation.

Multiple Trip Settings (IEEE 279-1971, paragraph 4.15)

There are no multiple set points within the ESF systems.

Completion of Protective Action Once Initiated (IEEE 279-1971, paragraph 4.16)

Each of the automatically ESF system initiation control logic channels seal-in electrically and remain energized after initial conditions return to normal. Deliberate operator action is required to return (reset) an ESF system logic to normal.

Manual Initiation (IEEE 279-1971, paragraph 4.17)

See the discussion of Regulatory Guide 1.62 in Section 7.3.2.1.3.

Access to Setpoint Adjustments (IEEE 279-1971, paragraph 4.18)

All access to ESF system setpoint adjustments, calibration controls, and test points are under the administrative control of the control room operator.

Identification of Protective Actions (IEEE 279-1971, paragraph 4.19)

The ESF protective actions are directly indicated and identified by annunciators located in the main control room and a printed record is available from the process computer and transient data acquisition system.

Information Readout (IEEE 279-1971, paragraph 4.20)

The ESF systems are designed to provide the operator with accurate and timely information pertinent to their status. They do not introduce signals that could cause anomalous indications confusing to the operator.

System Repair (IEEE 279-1971, paragraph 4.21)

The ESF systems are designed to permit repair or replacement of components.

Recognition and location of a failed component will be accomplished during periodic testing or by annunciation in the main control room.

Identification (IEEE 279-1971, paragraph 4.22)

The ESF panels are identified by nameplates. The nameplate shows the division to which each panel or rack is assigned and also identifies the function in the system of each item of the control panel. The system to which each externally mounted relay belongs is identified on the relay panels.

Wiring and cabling outside of panels are labeled to indicate its divisional assignment as well as its system assignment (see Section 8.3.1.3).

7.3.2.1.3 Conformance to Regulatory Guides

The following is a discussion of conformance to those Regulatory Guides which apply specifically to the ESF systems. See Section 7.1.2.4 for a discussion of Regulatory Guides which apply equally to all safety-related systems.

Regulatory Guide 1.22 - 1972

The ESF systems instrumentation and controls are capable of being tested during normal plant operation (unless that testing is detrimental to plant availability) to verify the operability of each system component. Testing of safety-related sensors is accomplished by valving out each sensor, one at a time, and applying a test pressure source or as in the case of the main steam line radiation sensors, the sensors may be removed and test sources applied. This verifies the operability of the sensor, sensor contacts, and the sensor setpoint. Associated logic components are typically tested during plant shutdown conditions when component activation is not detrimental to plant operation. Functional operability of temperature sensors may be verified by readout comparisons, applying a heat source to the locally mounted temperature sensing elements or by continuity testing.

For the HPCS, LPCS, and LPCI, testing for functional operability of the control logic relays can be accomplished by use of plug-in test jacks and switches in conjunction with single sensor tests. Annunciation is provided in the main control room whenever a test plug is inserted in a jack to indicate to the operator that an ECCS is in a test status.

Operability of air-operated, solenoid-operated, and motor-operated valves is verified by actuating the valve control switches and monitoring the position change by position indicating lights at the control switch.

The ESF systems are provided with indications, status displays, annunciation, and computer printouts which aid the control room operator during periodic system tests to verify component operability.

Regulatory Guide 1.53 - 1973

See IEEE 279 paragraph 4.2 in Section 7.3.2.1.2.

Regulatory Guide 1.62 - 1973

The HPCS, LPCS, and the Division 2 LPCI system can be manually initiated at the system level from the main control room by actuation of armed push buttons. The LPCS push button also initiates the Division 1 LPCI system.

The ADS and the PCRVICS (except RCIC is manually isolated at the system level by its "Manual Isolation Push Button") are manually initiated at the system (division) level by actuation of two armed push buttons (one for each logic channel). The CIA system provides pneumatic pressure for opening of the ADS valves and is normally in service. A safety-related source of pressurized nitrogen will automatically come on line if the normal supply cannot maintain system pressure above a preset pressure. There is no remote manual initiation of the CIA system.

The CSCM is manually initiated at the system (division) level by actuation of the RHR pump start control switch and by opening the containment spray or suppression chamber spray valves.

If SM-7 or SM-8 is powered from TR-S, then the LPCS, LPCI A/B/C pump will not start when actuated with the manual arm and depress pushbuttons unless there is an associated valid Drywell Pressure – High or Reactor Vessel Water Level – Low Low, Level 2 signal. If needed, the desired pump system can be manually initiated.

The SPCM is manually initiated from the main control room by actuation of system pump and valve controls.

The SW system is manually initiated at the system (division) level by actuation of the pump start control switch.

The main control room and critical switchgear HVAC is manually initiated at the system (division) level by actuation of individual fan start control switches.

The SGT is manually initiated at the system (division) level by actuation of the system start control switch.

The actuation of the system level manual initiation switches simulates all the actions of automatic or manual (individual equipment initiation) system actuation.

Table 7.3-1

High-Pressure Core Spray
System Instrumentation

Function	Instrument[a]
Reactor vessel low water level (level 2)	Level switch (B22-N031A-D) MS-LIS-31A-D
Drywell high pressure	Pressure switch (B22-N047A-D) MS-PS-47A-D
Reactor vessel high water level (level 8)	Level switch (B22-N100A, B) MS-LIS-100A, B
Pump minimum flow	Flow switch (E22-N006) HPCS-FIS-6
Suppression pool high water level	Level switch (E22-N002A, B) HPCS-LS-2A, B
Condensate storage tanks low level	Level switch (E22-N001A, B) HPCS-LS-1A, B
Condensate supply line level	Pressure switch HPCS-PS-3A, B

[a] Instruments in parentheses are the GE designation.

Table 7.3-2

Automatic Depressurization
System Instrumentation

Function	Instrument[a]
Reactor vessel low water level (level 3)	Level switch (B22-N038A, B) MS-LIS-38A, B
Reactor vessel low water level (level 1)	Level switch (B22-N037A-D) MS-LIS-37A-D
Low-pressure coolant injection permissive	Pressure switch (E12-N016A-C) RHR-PS-16A-C (E12-N019A-C) RHR-PS-19A-C
Low-pressure core spray permissive	Pressure switch (E21-N001) LPCS-PS-1 (E21-N009) LPCS-PS-9
Automatic depressurization time delay	Timer B22-K5AA (MS-RLY-ADK5AA) B22-K5BB (MS-RLY-ADK5BB)

[a] Instruments in parentheses are the GE designation.

Table 7.3-3

Low-Pressure Core Spray
System Instrumentation

Function	Instrument[a]
Reactor vessel low water level (level 1)	Level switch MS-LIS-37A, C (B22-N037A, C)
Drywell high pressure	Pressure switch MS-PS-48A, C (B22-N048A, C)
Injection valve permissive	Pressure switch MS-PS-413C (B22-N413C)
Pump minimum flow bypass	Flow switch LPCS-FIS-4 (E21-N004)

[a] Instruments in parentheses are the GE designation.

Table 7.3-4

Low-Pressure Coolant Injection
Instrumentation

Function	Instrument[a]
Reactor vessel low water level (level 1)	Level switch MS-LIS-37A-D (B22-N037A-D)
Drywell high pressure	Pressure switch MS-PS-48A-D (B22-N048A-D)
Low-pressure coolant injection pump delay (on loss of normal power)	Timer RHR-RLY-K70A, B
Injection valve permissive	Pressure switch MS-PS-413A, B, D (B22-N413A, B, D)
Pump minimum flow bypass	Flow switch RHR-FIS-10A-C (E12-N010A-C)

[a] Instruments in parentheses are the GE designation.

Table 7.3-5

Primary Containment and Reactor Vessel
Isolation Control System Instrumentation

Function	Instrument[a]
Reactor vessel low water level (level 3)	Level switch MS-LIS-24A-D (B22-N024A-D)
Reactor vessel low-low water level (level 2)	Level transmitter MS-LT-61A-D Level switch MS-LS-300A-D
Reactor vessel low-low-low water level (level 1)	Level transmitter MS-LT-61A-D Level switch MS-LIS-200A-D
Main steam line high radiation [closes RRC-V-19 (20)]	Radiation monitor MS-RIS-610A-D (D17-K610A-D)
Main steam line tunnel high temperature Main steam line tunnel high differential temperature	Temperature monitor LD-MON-2A (2B)
Main steam line low pressure	Pressure switch MS-PS-15A-D (B22-N015A-D)
Drywell high pressure	Pressure switch RPS-PS-2A-D (C72-N002A-D)
Reactor building ventilation exhaust high radiation	Radiation monitor REA-RIS-609A-D (D17-K609A-D)
Main condenser low vacuum	Pressure switch MS-PS-56A-D (B22-N056A-D)

Table 7.3-5

Primary Containment and Reactor Vessel
Isolation Control System Instrumentation (Continued)

Function	Instrument[a]
Main steam line high flow	Differential pressure switch MS-DPIS-8A-D (E31-N008A-D) MS-DPIS-9A-D (E31-N009A-D) MS-DPIS-810A-D (E31-N010A-D) MS-DPIS-11A-D (E31-N011A-D)
RWCU system high differential flow	Flow Switch LD-FS-605A,B
RWCU blowdown line high flow	Flow Switch LD-FS-15,16
RWCU equipment areas high temperature RWCU equipment areas high differential temperature	Temperature Monitor LD-MON-1A,1B
RHR shutdown cooling suction high flow	Differential Pressure Switch RHR-DPIS-12A,B
RHR equipment areas high temperature RHR equipment areas high differential temperature	Temperature Monitor LD-MON-2A,2B
RCIC steam supply line high flow	Differential pressure switch RCIC-DPIS-13A,B RCIC-DPIS-7B
RCIC equipment areas high temperature RCIC equipment areas high differential temperature	Temperature Monitor LD-MON-1A,1B

[a] Instruments in parentheses are the GE designation.

Table 7.3-6

DELETED

Table 7.3-7

Residual Heat Removal System - Containment Spray
Cooling Mode System Instrumentation

Function	Instrument[a]
Drywell high pressure	Pressure switch (B22-N048A-D) MS-PS-48A-D
Reactor vessel low water level (level 1)	Level switch (B22-N037A-D) MS-LIS-37A-D

[a] Instruments in parentheses are the GE designation.

Table 7.3-8

Residual Heat Removal System - Suppression Pool
Cooling Mode System Instrumentation

Function	Instrument[a]
Reactor vessel low water level (level 1)	Level switch (B22-N037A-D) MS-LIS-37A-D
Drywell high pressure	Pressure switch (B22-N048A-D) MS-PS-48A-D
Suppression pool temperature - high	Temperature recorder CMS-TR-5, 6 Temperature indicator SPTM-TI-5

[a] Instruments in parentheses are the GE designation.

Table 7.3-9

Standby Service Water System Instrumentation

Function	Instrument
Standby service water discharge pressure low	Pressure switch SW-PS-1A, 1B, and 40B
Spray pond temperature	Temperature switch SW-TS-1A, 1B, 1C, and 1D

Table 7.3-10

Main Control Room and Critical Switchgear
Room HVAC System Instrumentation

Function	Instrument[a]
Control room temperature	Temperature controller WMA-TIC-11A, B
Switchgear rooms temperature	Temperature controllers WMA-TIC-52A, B WMA-TIC-53A, B
Reactor vessel low-low water level (level 2)	Level transmitter MS-LT-61A-D Level switch MS-LS-300A-D
Drywell high pressure	Pressure switch (C72-N002A-D) RPS-PS-2A-D
Reactor building ventilation exhaust high radiation	Radiation monitor (D17-K609A-D) REA-RIS-609A-D

[a] Instruments in parentheses are the GE designation.

Table 7.3-11

Standby Gas Treatment System Instrumentation

Function	Instrument[a]
Reactor vessel low-low water level (level 2)	Level transmitter MS-LT-61A-D Level switch MS-LS-300A-D
Drywell high pressure	Pressure switch (C72-N002A-D) RPS-PS-2A-D
Reactor building ventilation exhaust high radiation	Radiation monitor (D17-K609A-D) REA-RIS-609A-D

[a] Instruments in parentheses are the GE designation.

Table 7.3-12

Reactor Building Ventilation and Pressure
Controller System Instrumentation

Function	Instrument
Reactor building differential pressure	Differential pressure transmitter REA-DPT-1A1-1A4 REA-DPT-1B1-1B4 Differential pressure controller REA-DPIC-1A, 1B

Table 7.3-13

Containment Instrument Air
System Instrumentation

Function	Instrument
Safety-related header pressure - low	Pressure switch CIA-PIS-21A, B
Safety-related header pressure - low	Pressure switch CIA-PS-22A, B
Non-safety-related header pressure - low	Pressure switch CIA-PS-39A, B

Table 7.3-14

DELETED

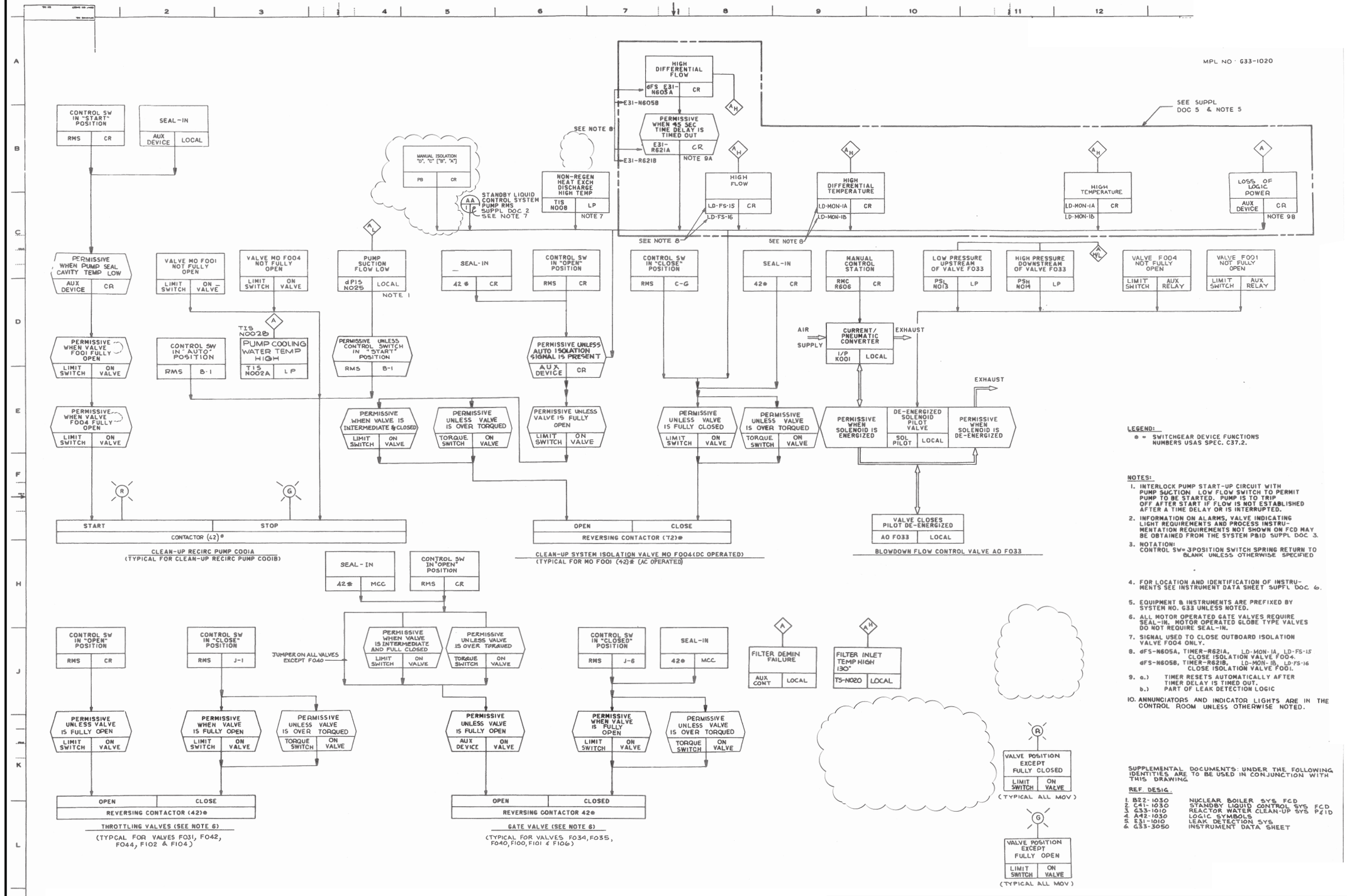

Columbia Generating Station Final Safety Analysis Report	Reactor Water Cleanup System		
	Draw. No. 02G33-02,9	Rev. 11	Figure 7.3-1

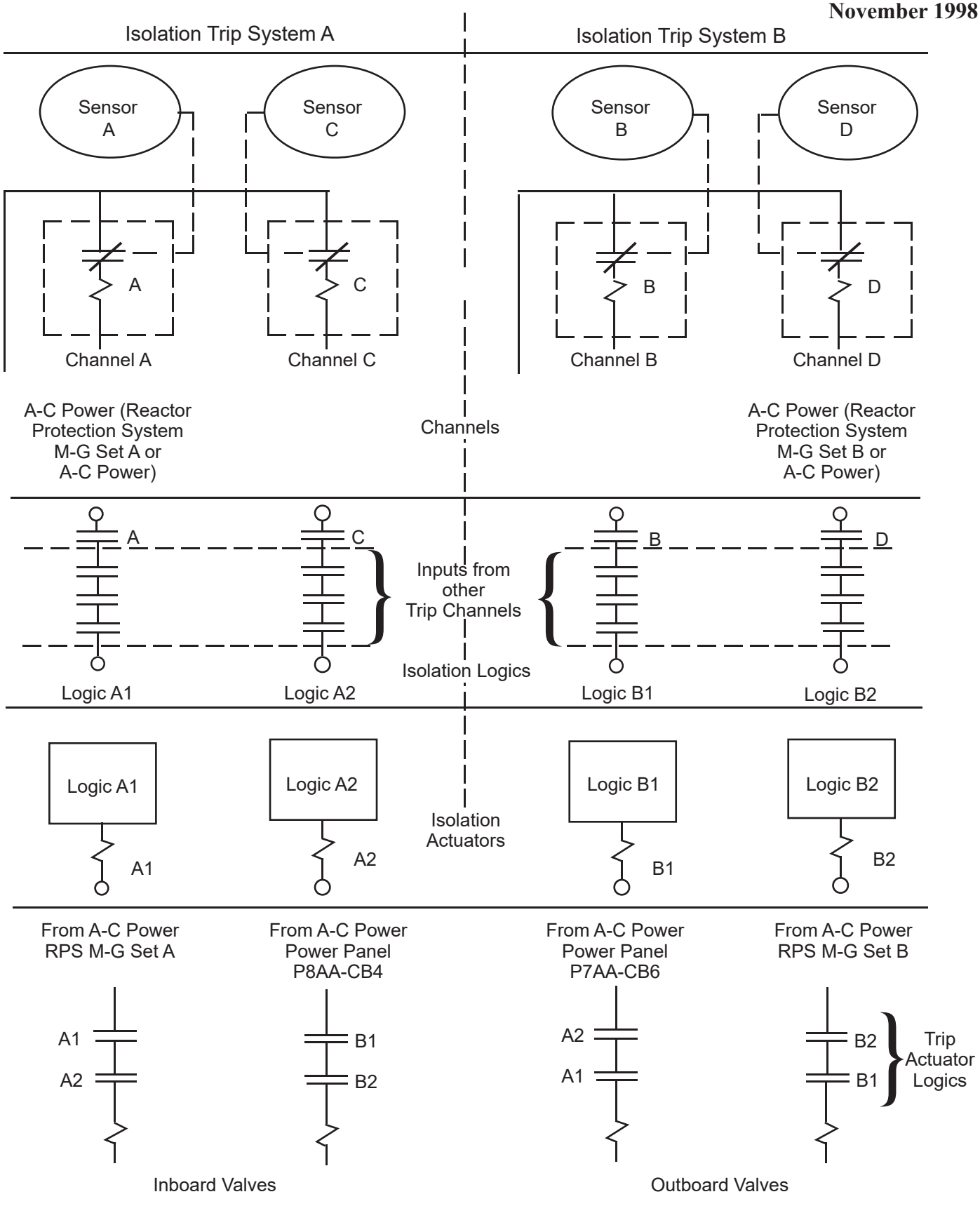

Columbia Generating Station Final Safety Analysis Report	Isolation Control System for Main Steam Line Isolation Valves		
	Draw. No. 920843.55	Rev.	Figure 7.3-2

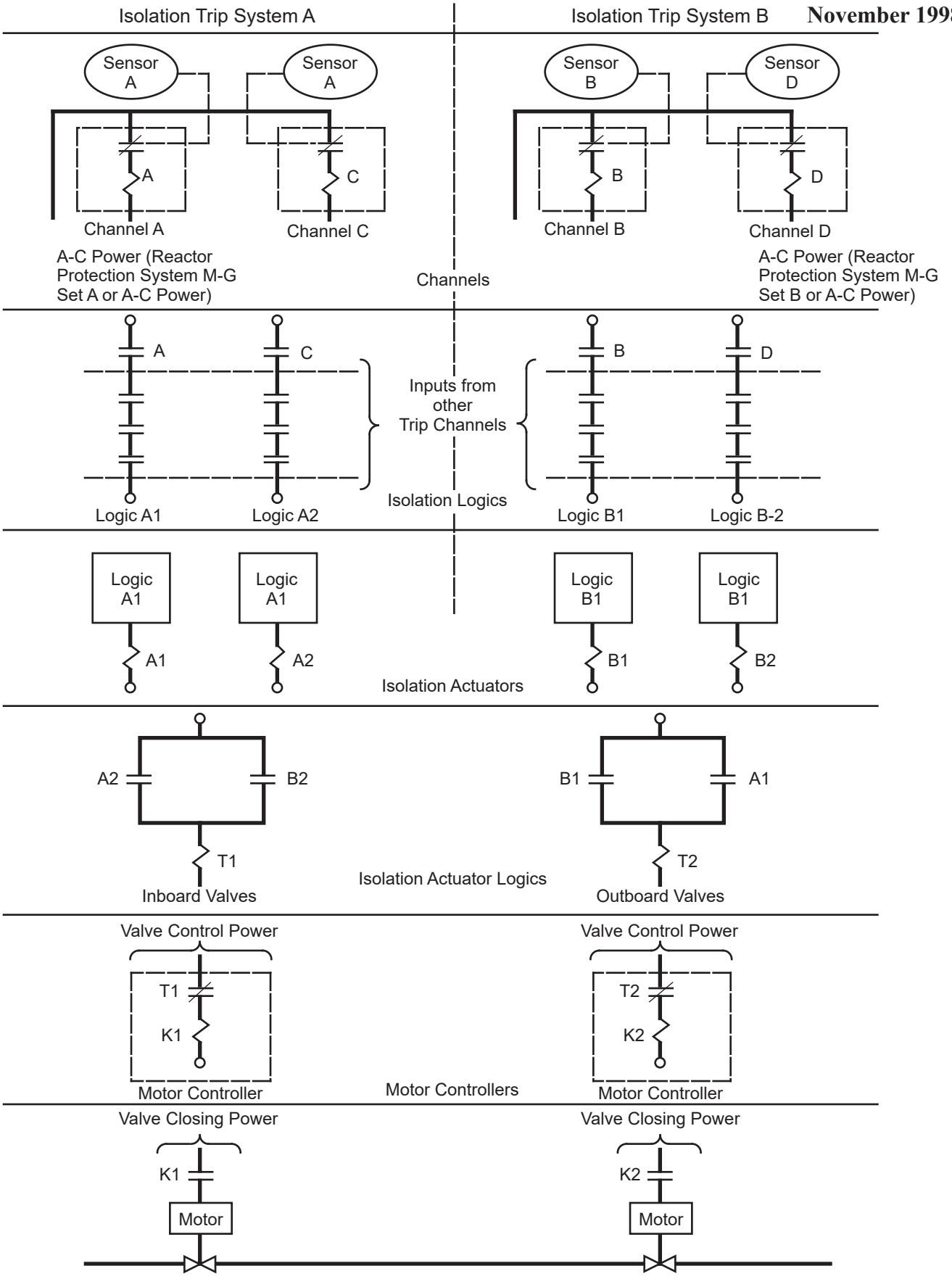

Columbia Generating Station Final Safety Analysis Report	**Isolation Control System Using Motor - Operated Valves**		
	Draw. No. 920843.61	Rev.	Figure 7.3-3

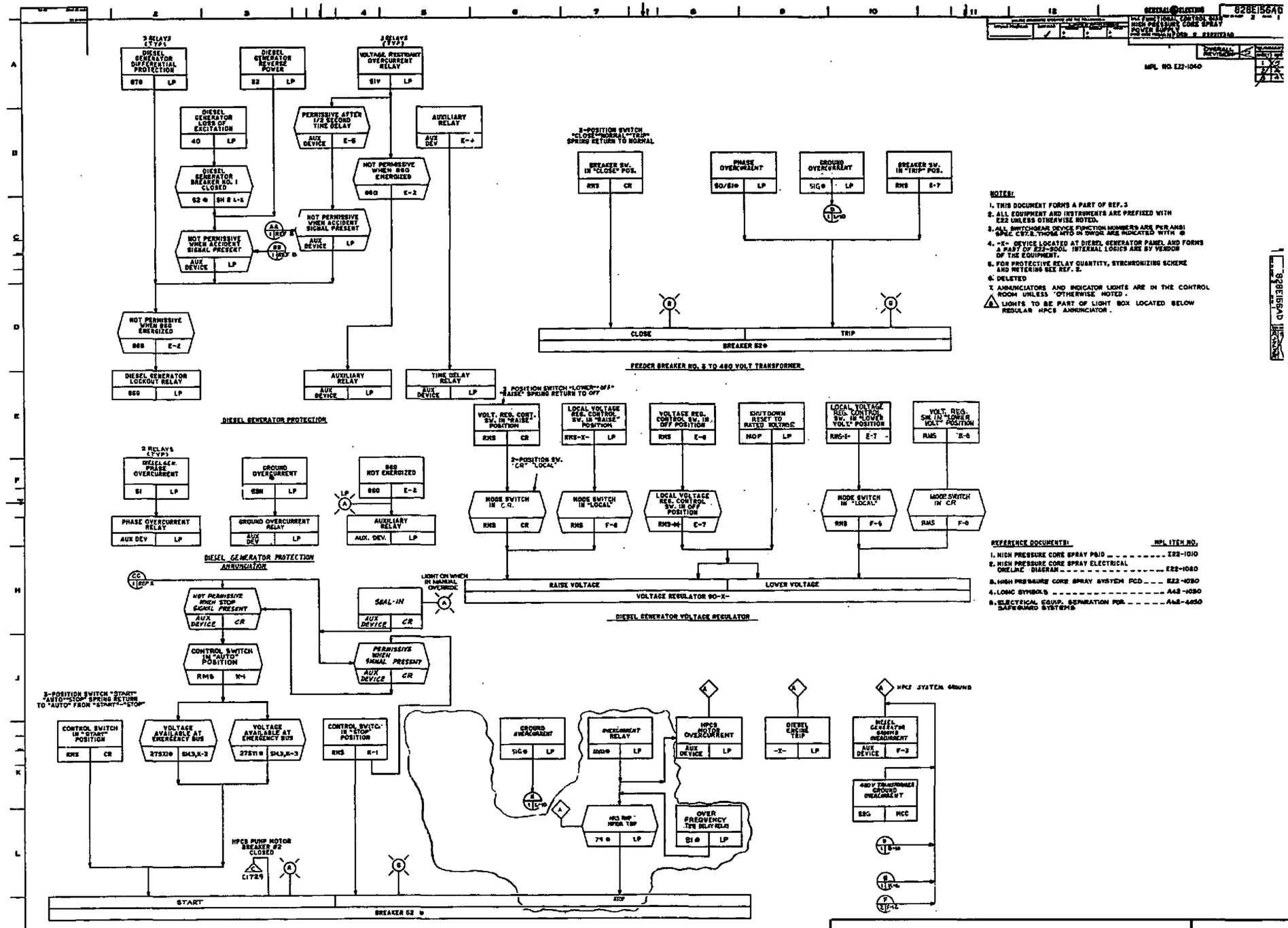

Columbia Generating Station Final Safety Analysis Report	HPCS Power Supply System – FCD			
	Draw. No. 02E22-04,6,1	Rev. 11	Figure 7.3-4.1	

Form No. 960690

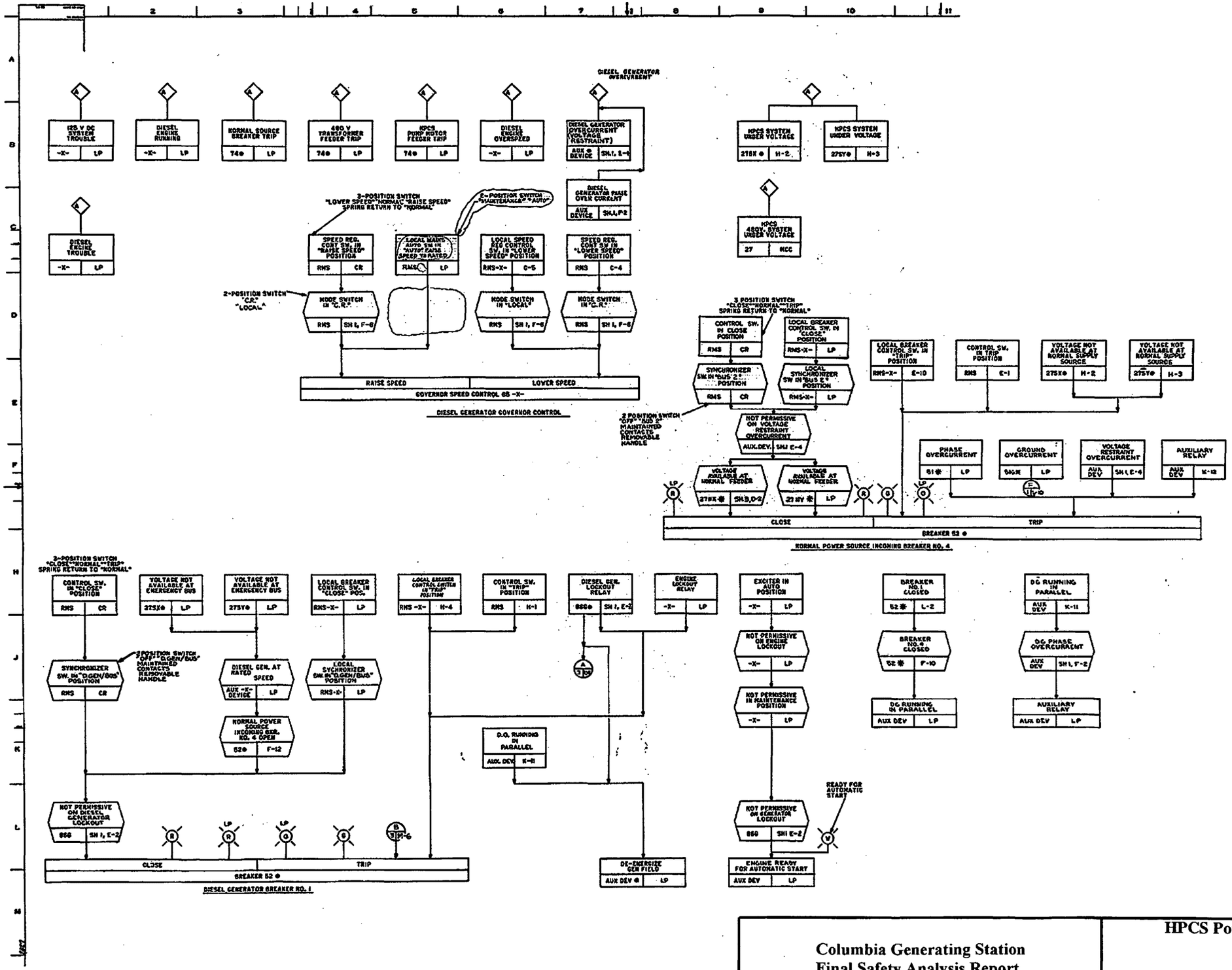

Columbia Generating Station
Final Safety Analysis Report

HPCS Power Supply System - FCD

Draw. No. 02E22-04,6,2	Rev. 7	Figure 7.3-4.2

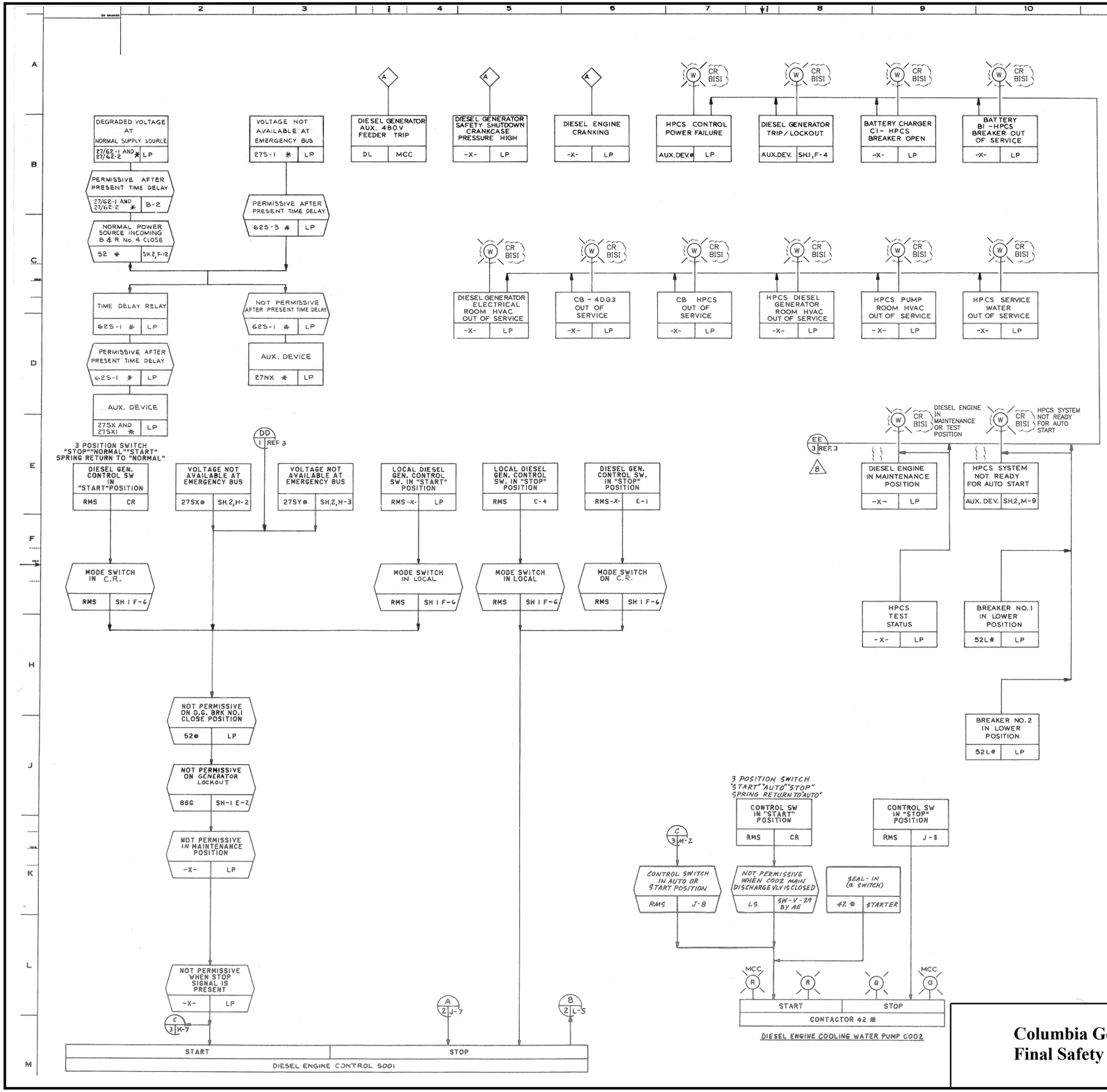

Columbia Generating Station Final Safety Analysis Report	**HPCS Power Supply System - FCD**	
	Draw. No. 02E22-04,6,3	Rev. 7 / Figure 07.3-04.3

ADS A

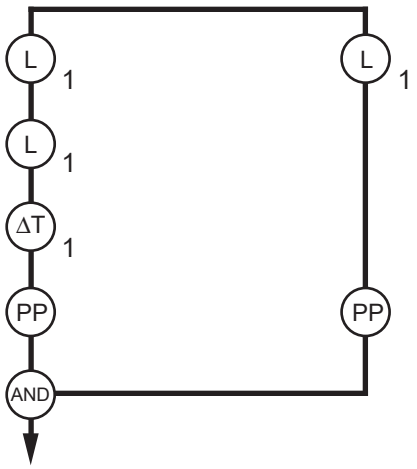

ADS A Solenoid Activated ADS Activated

ADS B

Battery B

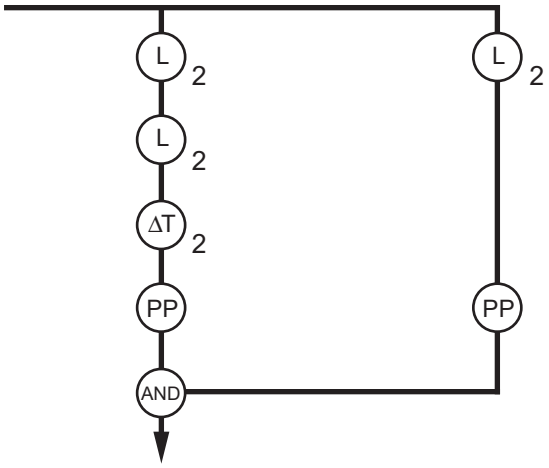

ADS B Solenoid Activated ADS Activated

LPCS, RHR A

Battery A

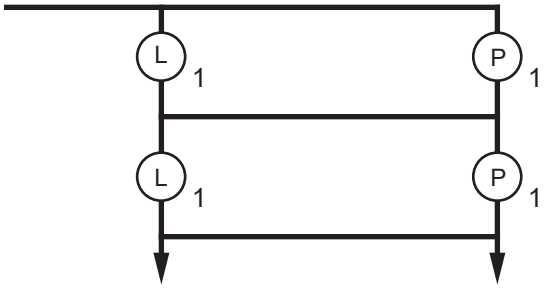

Start LPCS Start RHR A

(L) = Low Reactor Water Level

(P) = High Drywell Pressure

(PP) = Pump Permissive

ΔT = Time Delay

Where 1, 2, and 3 Represent Electrical Divisions

Columbia Generating Station Final Safety Analysis Report	**Initiation Logic - ADS, SPCS, LPCI A**		
	Draw. No. 920843.56	Rev.	Figure 7.3-5

RHR B, RHR C

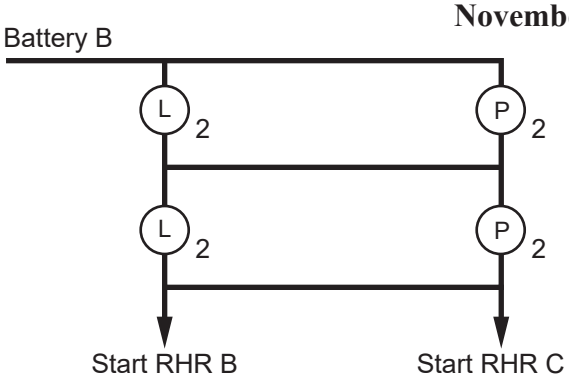

HPCS

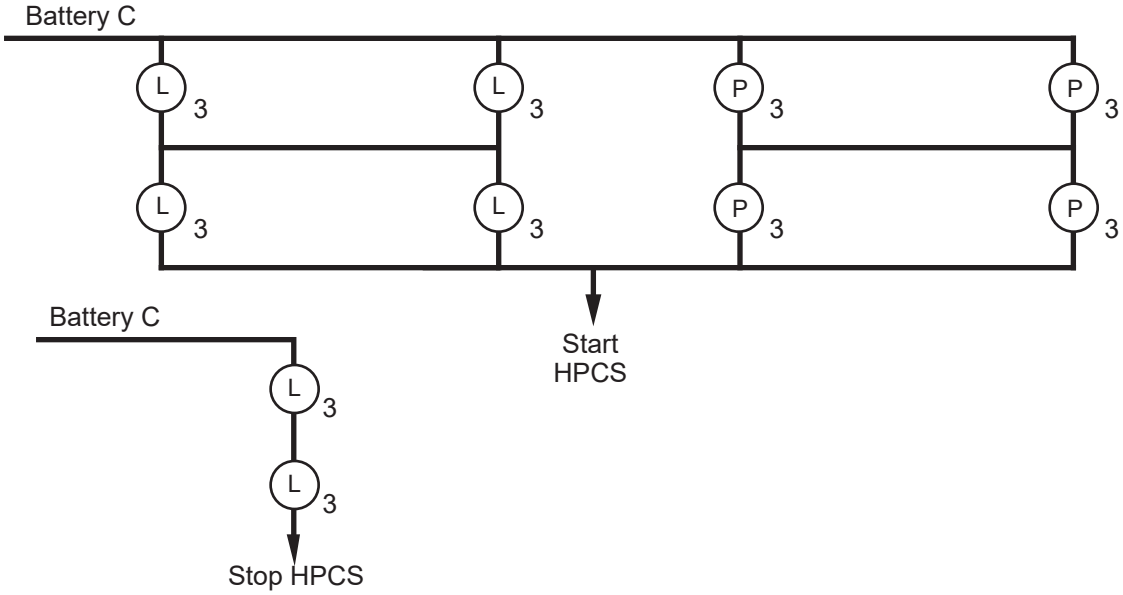

RCIC

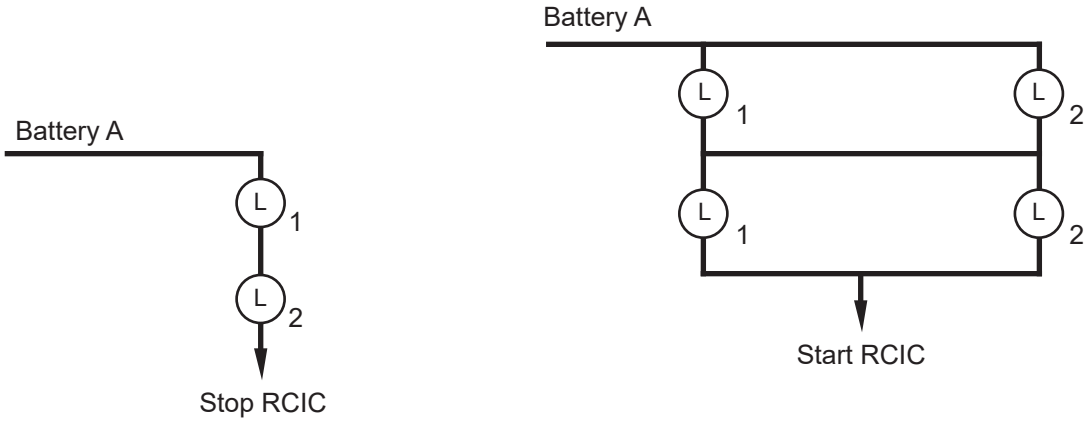

(L) = Reactor Vessel Water Level

(P) = High Drywell Pressure

1, 2, and 3 are Electrical Divisions

Columbia Generating Station Final Safety Analysis Report	Initiation Logic - LPCI B and C, HPCS, RCIC		
	Draw. No. 920843.57	Rev.	Figure 7.3-6

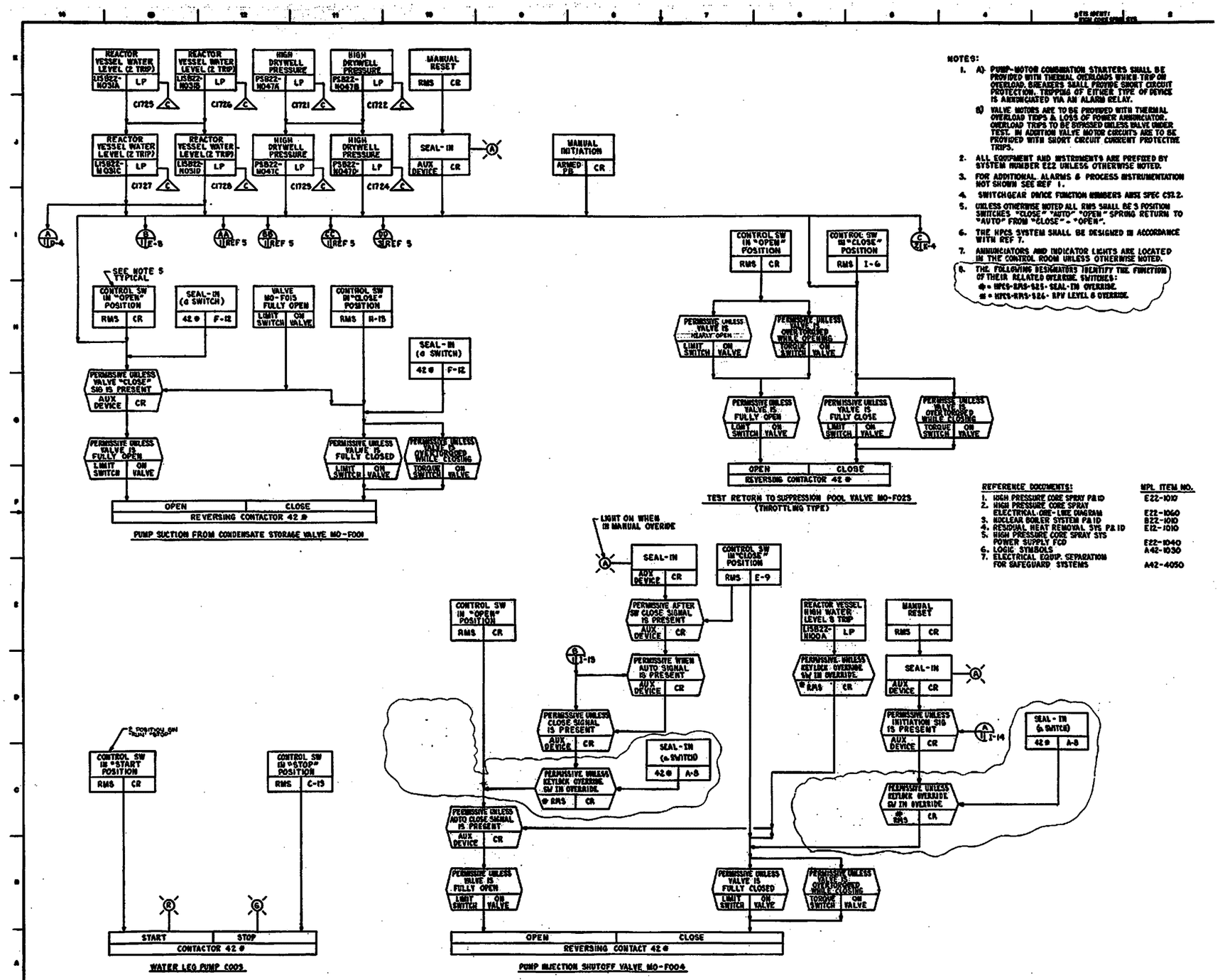

Columbia Generating Station Final Safety Analysis Report	High Pressure Core Spray System - FCD		
	Draw. No. 02E22-04,5,1	Rev. 8	Figure 7.3-7.1

Form No. 960690

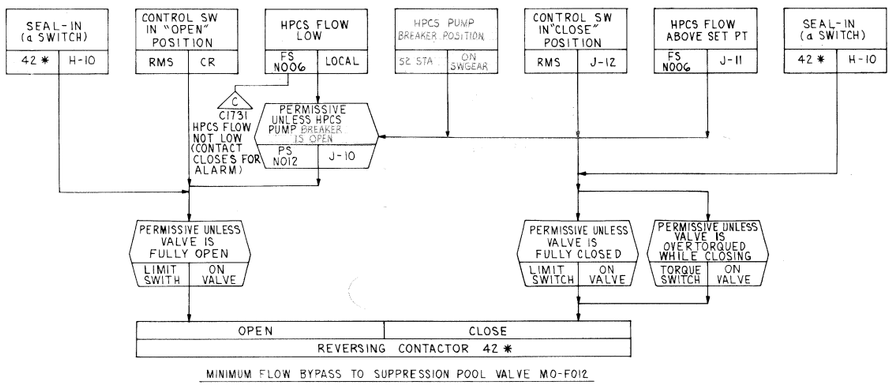

MINIMUM FLOW BYPASS TO SUPPRESSION POOL VALVE MO-F012

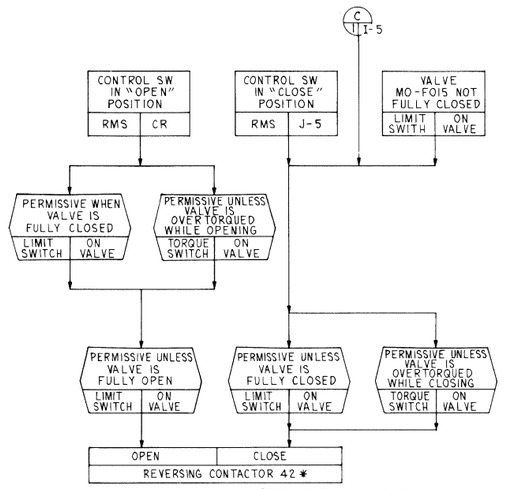

TEST RETURN TO CONDENSATE STORAGE TANK VALVE MO-F010
(THROTTLING TYPE) TYP FOR VALVE MO-F011

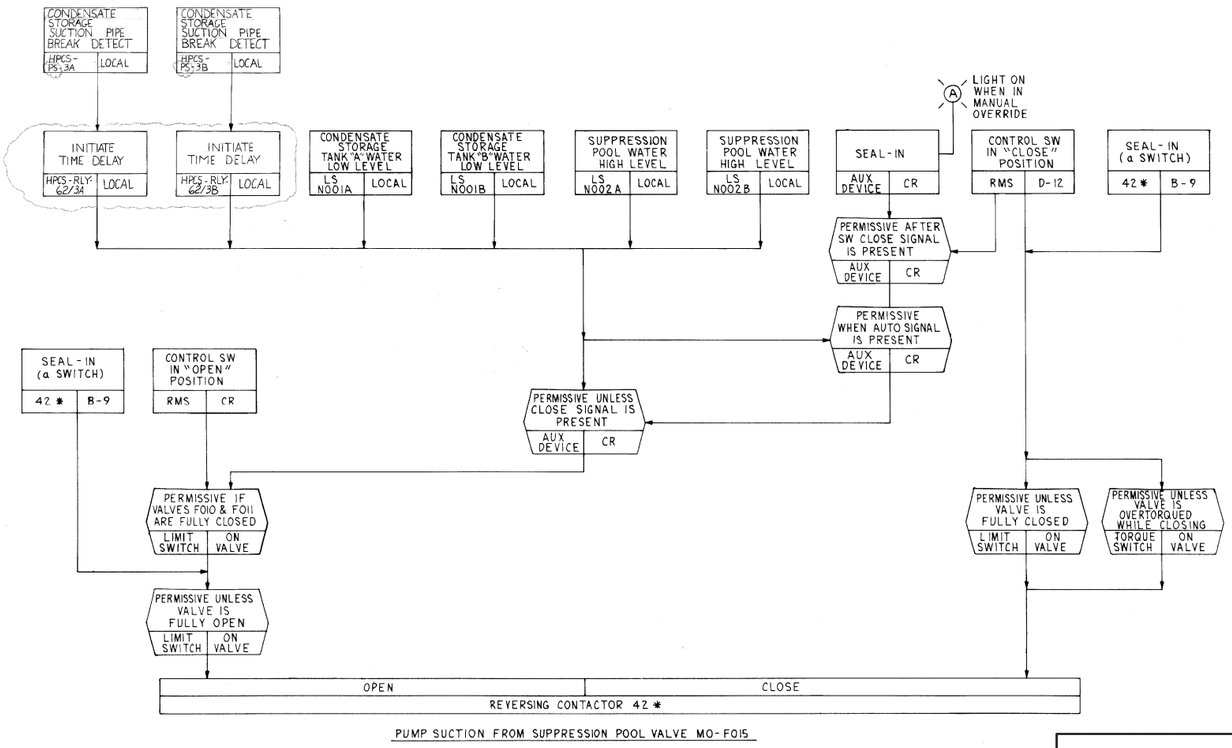

PUMP SUCTION FROM SUPPRESSION POOL VALVE MO-F015

Columbia Generating Station
Final Safety Analysis Report

High Pressure Core Spray System - FCD

Draw. No. 02E22-04,5,2 | Rev. 8 | Figure 7.3-7.2

Form No. 960690FH

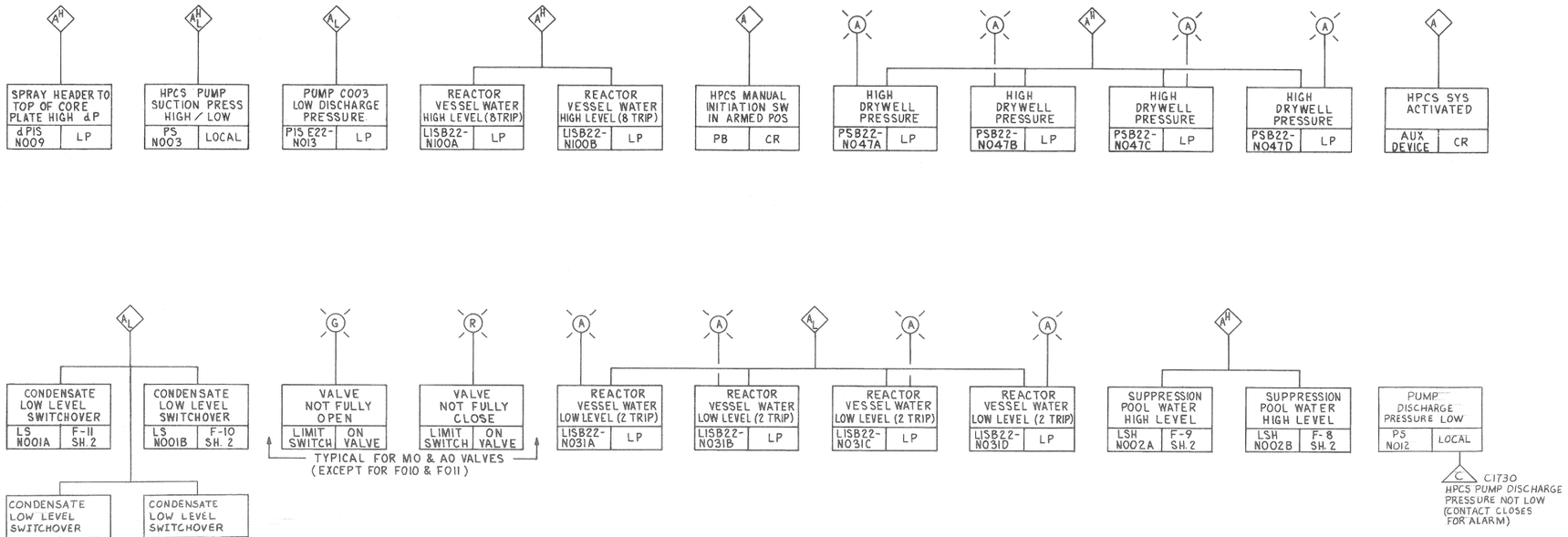

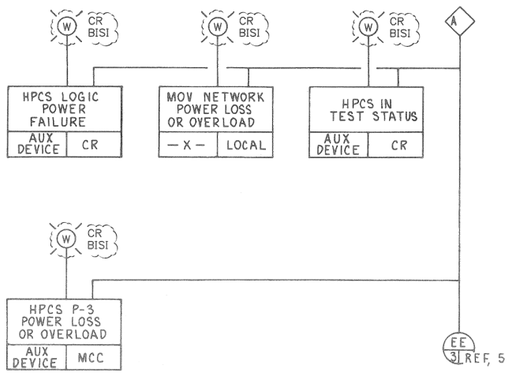

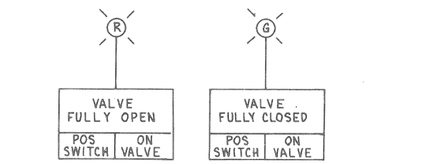

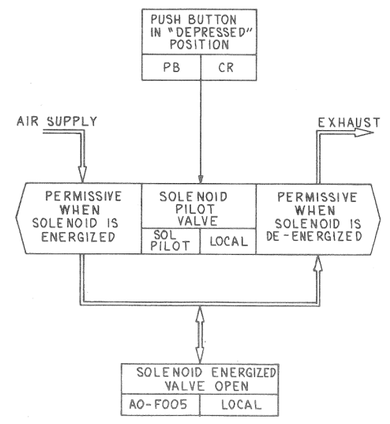

Columbia Generating Station
Final Safety Analysis Report

High Pressure Core Spray System - FCD

Draw. No. 02E22-04,5,3	Rev. 8	Figure 07.3-07.3

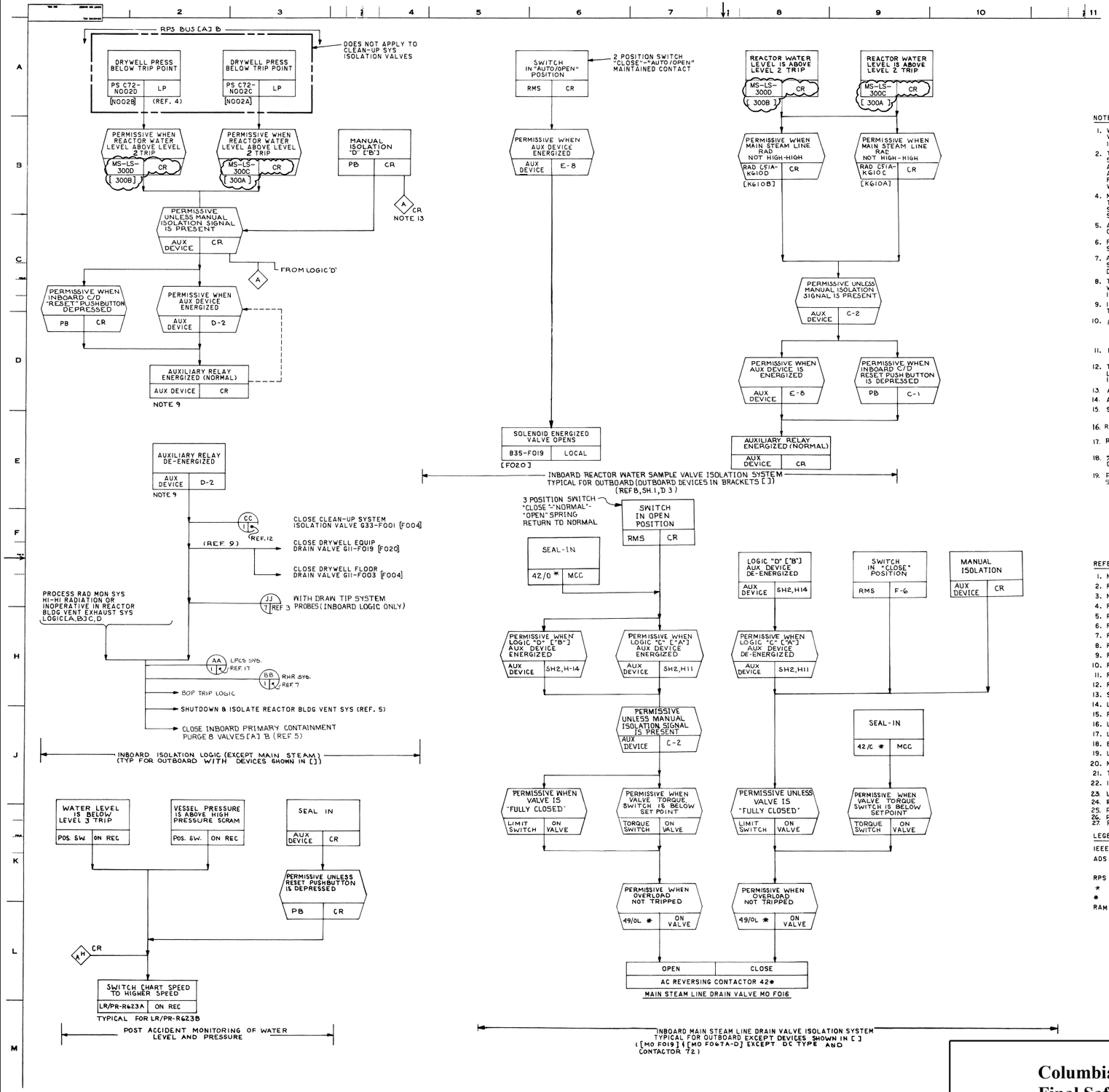

NOTES:

1. WHEN TEST SOLENOID PILOT IS ENERGIZED, THE MAIN STEAM ISOLATION VALVE OPERATOR IS SLOWLY EXHAUSTED (60 SEC CLOSURE TIME) WHILE VALVE IS CLOSED BY ACTION OF THE VALVE SPRING WITHOUT AID OF AIR PRESSURE.
2. THE ALARMS AND VALVE INDICATING LIGHTS SHOWN ON THE FCD ARE SYSTEM REQUIREMENTS IN ADDITION TO THOSE SHOWN ON THE SYSTEM P&ID ADDITIONAL INFORMATION ON ALARMS, VALVE POSITION INDICATING LIGHTS, AND PROCESS INSTRUMENTATION NOT SHOWN ON THIS FCD MAY BE OBTAINED FROM REF. 1. AUXILIARY RELAYS & DEVICES ARE NOT SHOWN ON FCD EXCEPT WHERE REQUIRED TO CLARIFY FUNCTION.
4. MAIN STEAM LINE ISOLATION LOGIC A & C, RPS "A" SOLENOID LOGIC AND THE VALVE TEST SOLENOID SHALL BE POWERED FROM THE REACTOR PROTECTION SYSTEM M-G SET A: LOGIC B & D AND RPS "B" SOLENOID LOGIC FROM RPS M-G SET B.
5. ALL EQUIPMENT AND INSTRUMENTS ARE PREFIXED BY SYSTEM NO. B22 UNLESS OTHERWISE NOTED.
6. FOR LOCATION AND IDENTIFICATION OF INSTRUMENTS SEE INSTRUMENT DATA SHEET LISTED IN MPL (REF. 22)
7. AUTO DEPRESSURIZATION CONTROL LOGIC CIRCUIT SHALL HAVE REDUNDANT POWER SUPPLIES SO THAT A SINGLE FAILURE WILL NOT DISABLE THE AUTO DEPRESSURIZATION FUNCTION.
8. THE NUCLEAR BOILER SYS SHALL BE DESIGNED IN ACCORDANCE WITH REF. 18 AND WITH "PROPOSED CRITERIA FOR NUCLEAR POWER PLANT PROTECTION SYSTEMS IEEE 279" AS APPLICABLE TO THE CONTROL CIRCUITRY.
9. ISOLATION LOGIC SHALL BE "FAILSAFE", I.E., LOGIC SHALL BE DESIGNED TO INITIATE ISOLATION FUNCTIONS WHEN DE-ENERGIZED.
10. *REMOVED*
11. REMOVED
12. THE DEVICES IN THIS AREA, AS WELL AS OTHER DEVICES IN THIS LOGIC ARE ESSENTIAL AND MUST MEET THE REQUIREMENTS OF IEEE 279.
13. ALARM FROM ROTARY CONTACT
14. AE TO SUPPLY DEVICE TYPE, NUMBERS AND QUANTITY.
15. SEE REF. 4 FOR INITIATION OF "SELECT ROD INSERT".
16. *REMOVED*
17. REMOVED
18. % REACTOR POWER DERIVED FROM FIRST STAGE TURBINE PRESSURE DETERMINE GROUP OF RELIEF VALVE TO BE OPEN.
19. FOR ADDITIONAL RECIRC PUMP A&B BREAKER CLOSE & TRIP LOGIC SEE REACTOR RECIRC SYS FCD. (REF.2)

REFERENCE DOCUMENTS:

	MPL ITEM NO.
1. NUCLEAR BOILER SYS P&ID	B22-1010
2. REACTOR RECIRC SYS FCD	B35-1020
3. NEUTRON MONITORING SYS FCD	C51-1020
4. REACTOR PROTECTION SYS IED	C72-1010
5. PROCESS RADIATION SYS IED	D13, D14, C17 & D18-10
6. RHR SYS P&ID	E12-1010
7. RHR SYS FCD	E12-1030
8. REACTOR RECIRC SYS P&ID	B35-1010
9. RADWASTE SYS P&ID *	G11 THRU G16-1010
10. RADWASTE SYS FCD *	G11 THRU G16-1030
11. REACTOR WATER CLEANUP SYS P&ID	G33-1010
12. REACTOR WATER CLEANUP SYS. FCD	G33-1020
13. SCHEMATIC CONTROL DIAGRAM	B22-F022 & F028
14. LOGIC SYMBOLS	A42-1030
15. PIPING & INSTRUMENT SYMBOLS	A42-1010
16. LOW PRESSURE CORE SPRAY P&ID	E21-1010
17. LOW PRESSURE CORE SPRAY FCD	E21-1030
18. ELEC EQUIP. SEPARATION FOR SAFEGUARD SYS	A62-4050
19. LEAK DETECTION SYS P&ID	E31-1010
20. NUCLEAR BOILER SYS P&ID DATA	B22-1040
21. TURB GEN. & STM BYPASS SYS	A62-4120
22. INSTRUMENT DATA SHEET	B22-3050
23. LEAK DETECTION SYS DES SPEC	E31-4010
24. REACTOR PROTECTION SYS. ELEM DIAG (C72A)	C72-1050
25. REMOVED	
26. REMOVED	
27. REMOVED	

LEGEND:

IEEE	INSTITUTE OF ELECTRICAL & ELECTRONICS ENGINEERS
ADS	AUTO DEPRESSURIZATION SYSTEM
RPS	REACTOR PROTECTION SYSTEM
*	APPLIES IF IN GE SCOPE OF SUPPLY
*	SWITCHGEAR DEVICE FUNCTION NO'S ASA SPEC C37.2
RAM	RADIATION MONITOR

Columbia Generating Station
Final Safety Analysis Report

Nuclear Boiler System - FCD

Draw. No. 02B22-04,23,1 | Rev. 19 | Figure 7.3-8.1

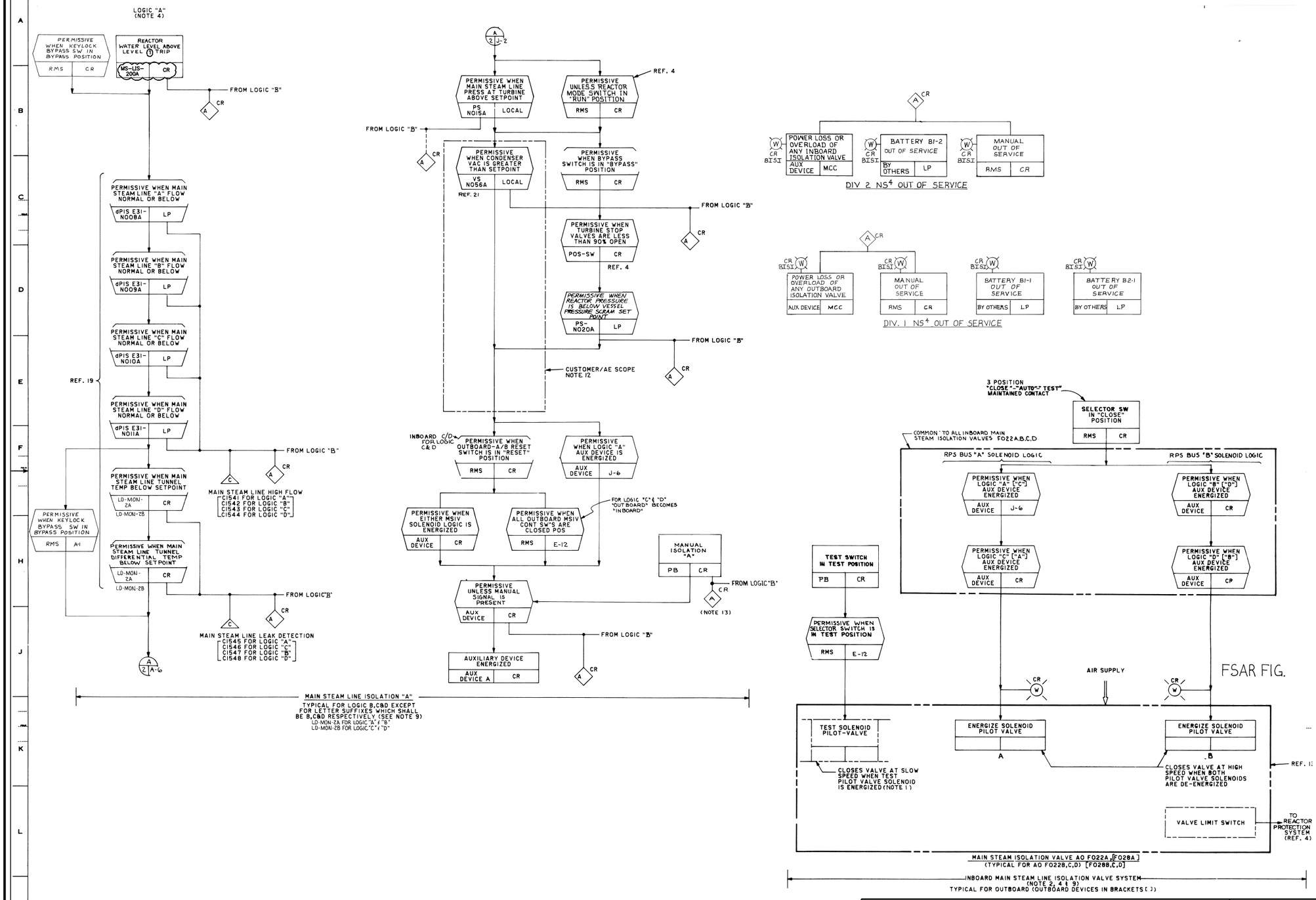

Columbia Generating Station
Final Safety Analysis Report

Nuclear Boiler System - FCD

Draw. No. 02B22-04,23,2	Rev. 22	Figure 7.3-8.2

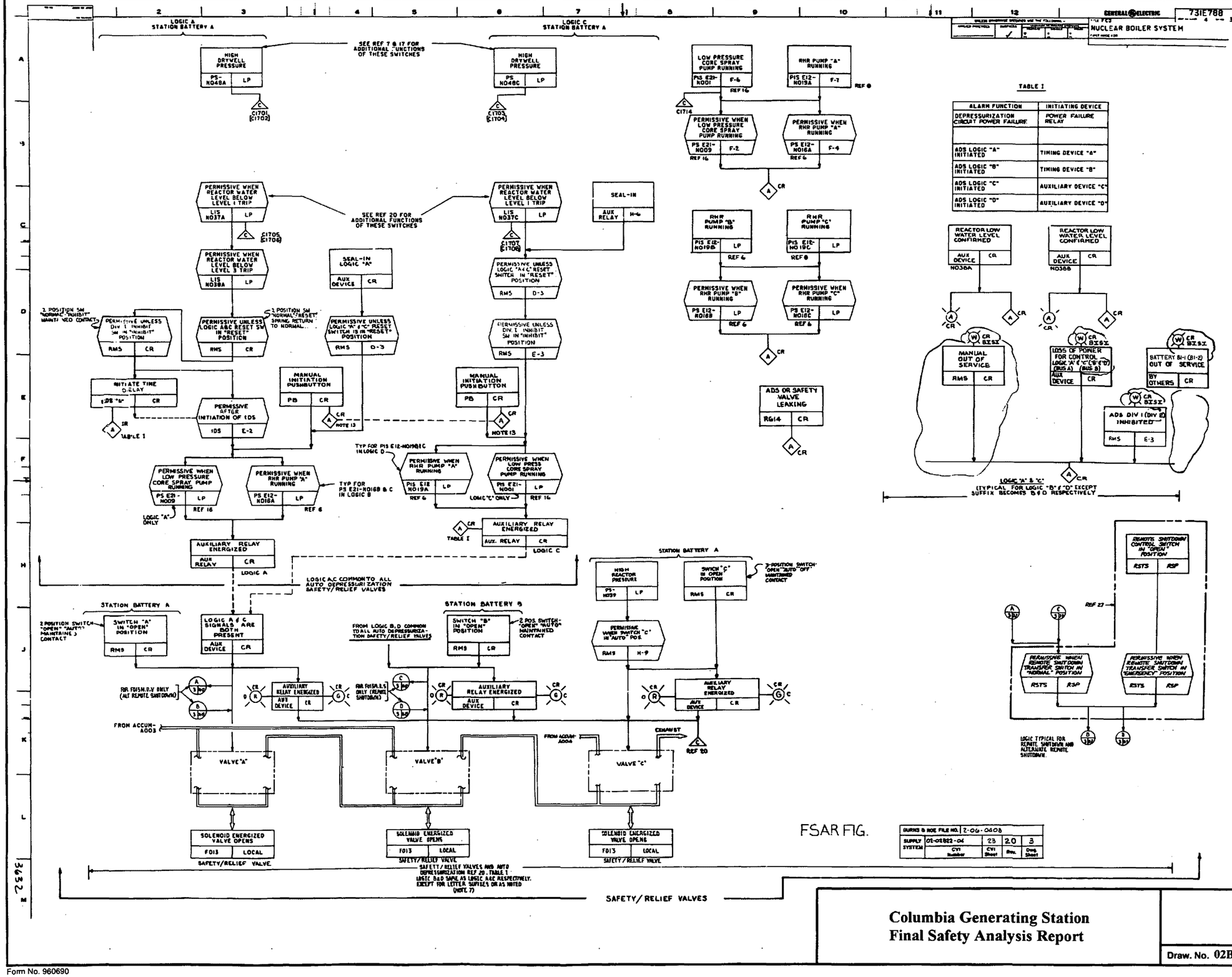

Columbia Generating Station
Final Safety Analysis Report

Nuclear Boiler System – FCD

Draw. No. 02B22-04,23,3 | Rev. 20 | Figure 7.3-8.3

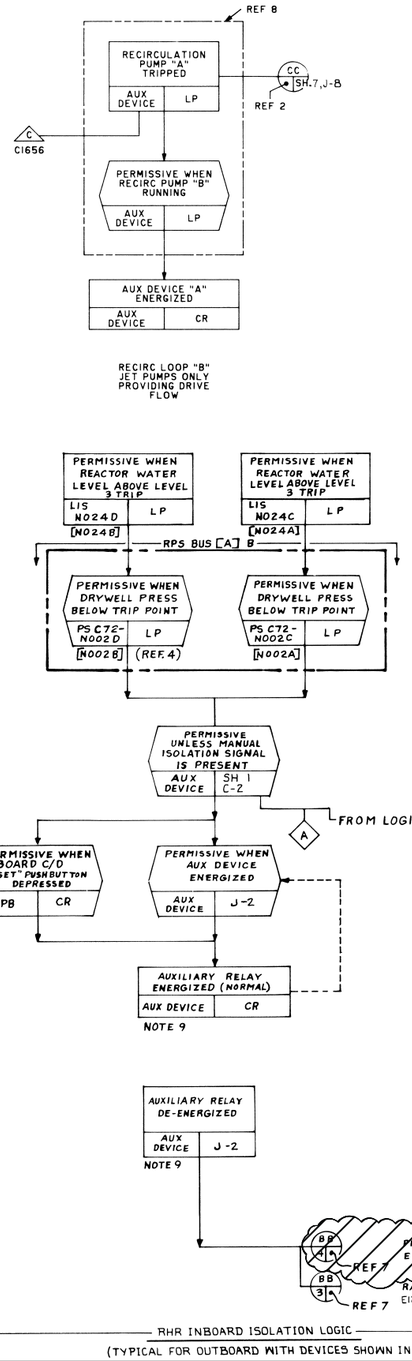

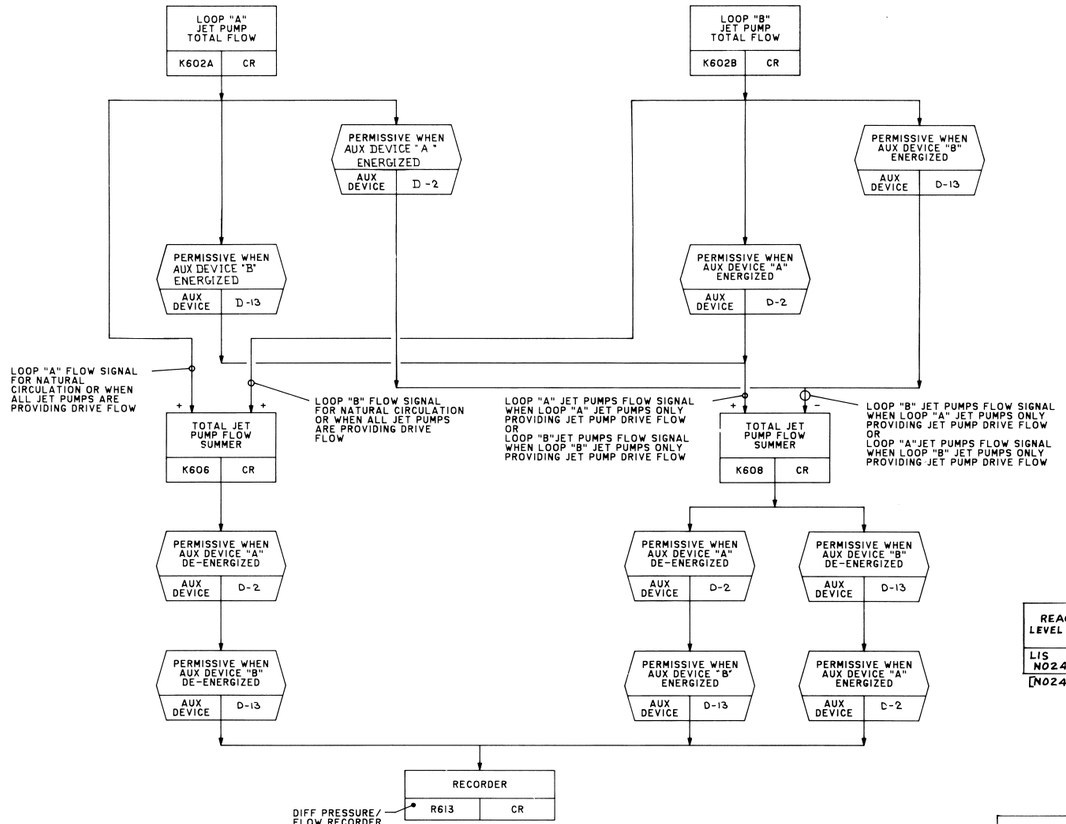

TOTAL JET PUMP FLOW MEASUREMENT SYSTEM

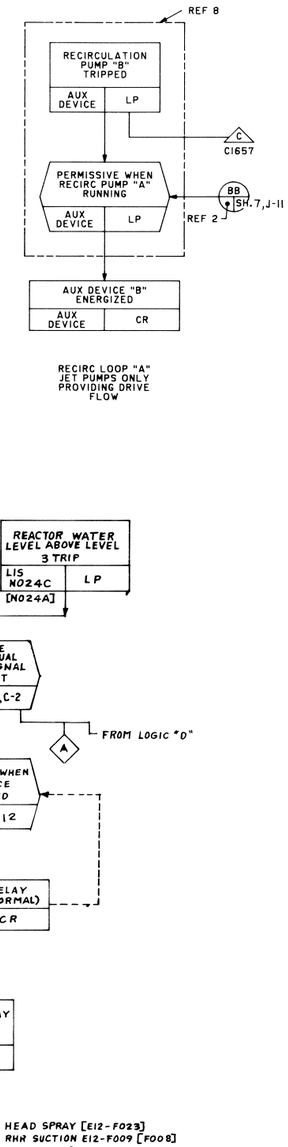

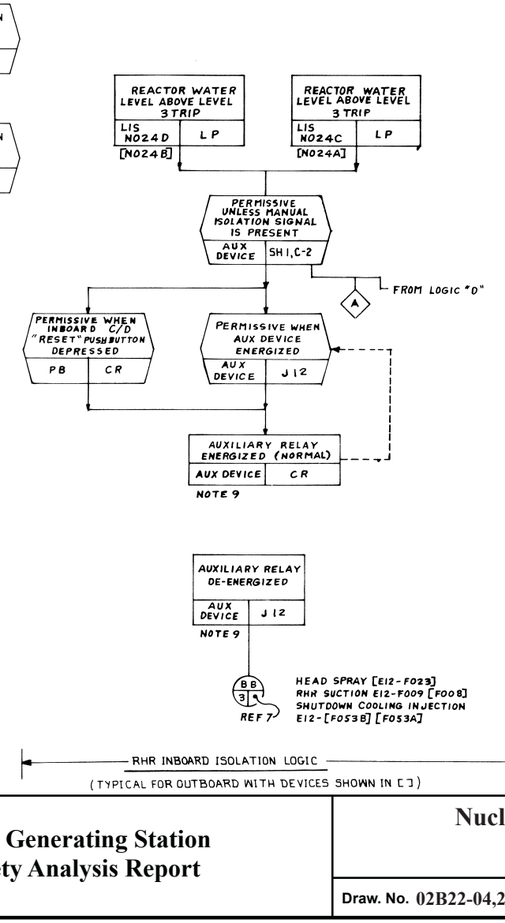

Columbia Generating Station
Final Safety Analysis Report

Nuclear Boiler System - FCD

Draw. No. 02B22-04,23,4	Rev. 17	Figure 7.3-8.4

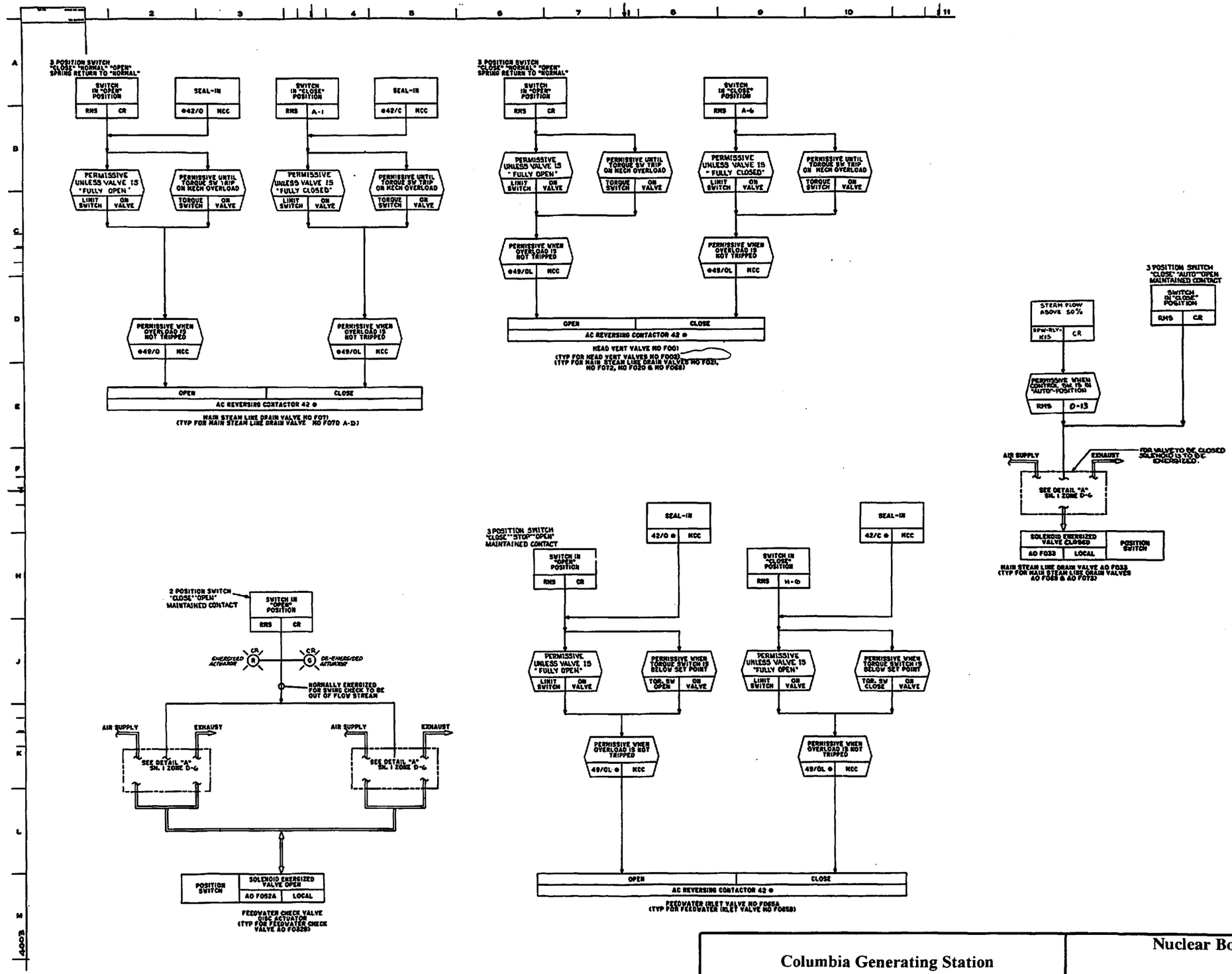

Columbia Generating Station
Final Safety Analysis Report

Nuclear Boiler System - FCD

Draw. No. 02B22-04,23,6	Rev. 17	Figure 7.3-8.5

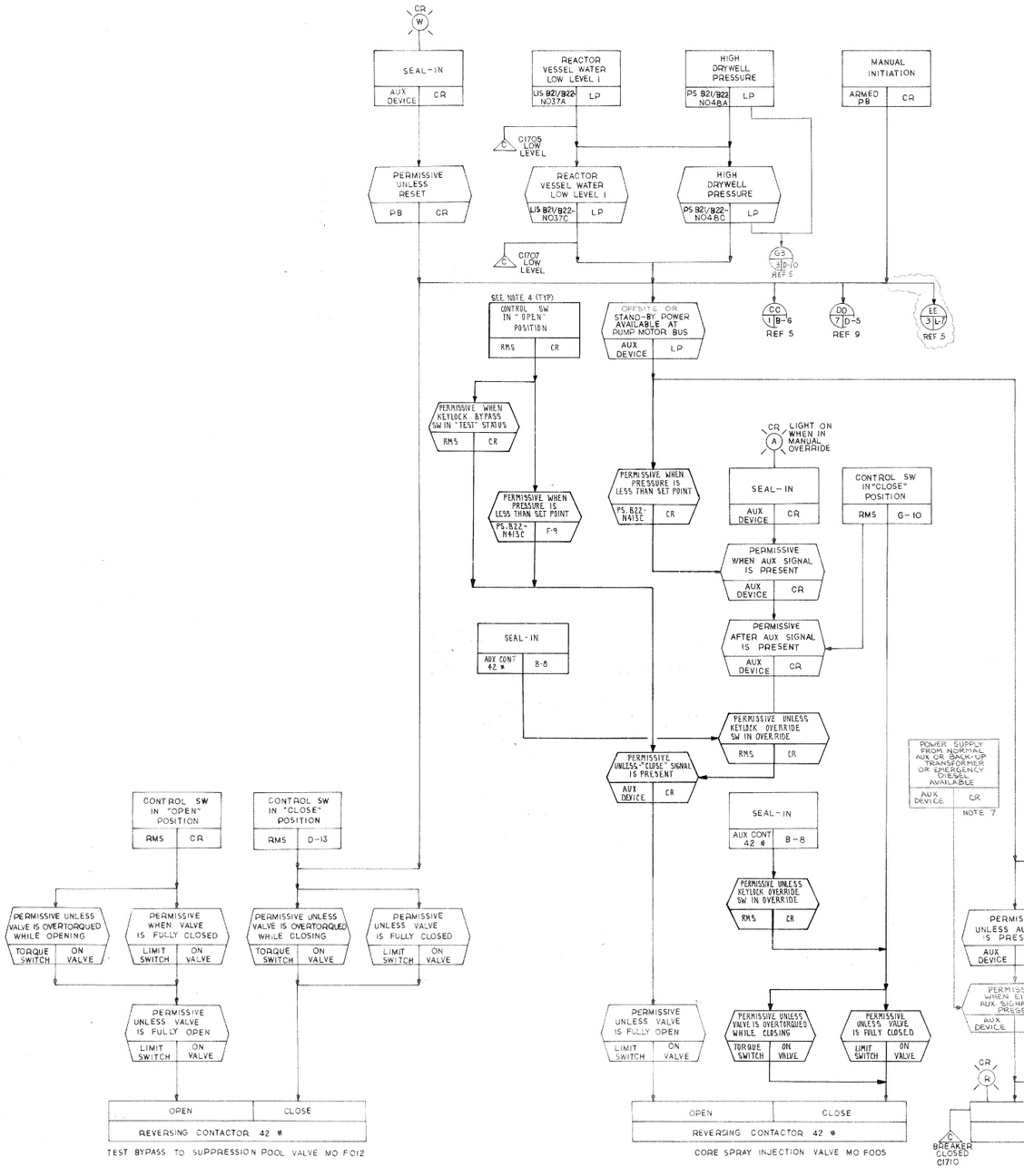

NOTES:

1. PUMP MOTOR SHALL BE PROTECTED WITH OVERLOAD PROTECTION. PROTECTION RELAYS ARE TO BE APPLIED SO AS TO MAINTAIN POWER ON THE MOTOR AS LONG AS POSSIBLE WITHOUT IMMEDIATE DAMAGE TO EMERGENCY POWER SYSTEM.
2. VALVE MOTORS ARE TO BE PROVIDED WITH THERMAL OVERLOAD TRIPS AND ANNUNCIATION. THE PHASE 1 & 3 OVERLOAD DEVICES SHALL BE IN THE MOTOR CIRCUIT AND THE PHASE 2 OVERLOAD DEVICE IN THE ANNUNCIATOR CIRCUIT. IN ADDITION, VALVE MOTOR CIRCUITS ARE TO BE PROVIDED WITH SHORT CIRCUIT CURRENT PROTECTIVE TRIPS.
3. FOR ADDITIONAL ALARMS AND PROCESS INSTRUMENTATION NOT SHOWN, SEE LPCS SYSTEM P &ID.
4. UNLESS OTHERWISE NOTED, ALL RMS SHALL BE 3 POSITION SWITCHES, "CLOSE" "AUTO" "OPEN", SPRING RETURN TO "AUTO" FROM "CLOSE" OR "OPEN".
5. CONTROL AND MOTIVE POWER FOR LPCS SHALL BE FROM SAME SOURCE AS THE RHR LOOP "B" EQUIPMENT (REF. 5).
6. THE LPCS SYSTEM SHALL BE DESIGNED IN ACCORDANCE WITH IEEE 279-1971 AND REF. DOC. 8.
7. THE PRESENCE OF THIS POWER SUPPLY SIGNAL IS EXCLUSIVE OF THE TR-S POWER SUPPLY SIGNAL AND VICE VERSA.

REFERENCE DRAWINGS:

	MPL ITEM NO.
1. HIGH PRESSURE CORE SPRAY SYSTEM P&ID	E22-1010
2. HIGH PRESSURE CORE SPRAY SYSTEM ELECTRICAL ONE-LINE DIAGRAM	E22-1060
3. NUCLEAR BOILER SYSTEM P & ID	B21/B22-1010
4. RESIDUAL HEAT REMOVAL SYSTEM P & ID	E12-1010
5. RESIDUAL HEAT REMOVAL SYSTEM FCD	E12-1030
6. NUCLEAR BOILER SYSTEM FCD	B21/B22-1030
7. LOGIC SYMBOLS	A42-1030
8. ELECTRICAL EQUIPMENT SEPARATION FOR SAFEGUARD SYSTEMS	A62-4050
9. REMOTE SHUTDOWN FCD	C61-1030

LEGEND:

* = SWITCHGEAR DEVICE FUNCTION NO. ANSI SPEC. C37.2
IEEE = INSTITUTE OF ELECTRICAL AND ELECTRONICS ENGINEERS.

Columbia Generating Station
Final Safety Analysis Report

Low Pressure Core Spray System - FCD

Draw. No. 02E21-04,6,1	Rev. 5	Figure 7.3-9.1

MAN. INIT. PB. IN ARMED POSITION | PB | SH. 1 J-7

PUMP DISCH PRESS ABNORMAL | PS N005 | CR

LPCS IS ACTUATED | AUX DEVICE | CR

LPCS PUMP MOTOR OVERLOAD | AUX DEVICE | LOCAL

POTENTIAL FOR DRAINING RPV TO SUPP. POOL | LIMIT SWITCH | ON VALVE

LPCS PUMP TRIPPED | AUX DEVICE | LOCAL

INJECTION VALVE KEYLOCK SWITCH IN TEST STATUS | RMS | SH. 1 G-10

LPCS SUCTION VALVE CONTROL SW IN "CLOSE" POSITION | RMS | D-9

REACTOR VESSEL WATER LOW LEVEL | LIS B21/B22-N037A | LP

REACTOR VESSEL WATER LOW LEVEL | LIS B21/B22-N037C | LP

HIGH DRYWELL PRESSURE | PS B21/B22-N048A | LP

HIGH DRYWELL PRESSURE | PS B21/B22-N048C | LP

VALVE NOT FULLY OPEN | LIMIT SWITCH | ON VALVE

VALVE NOT FULLY CLOSED | LIMIT SWITCH | ON VALVE

MANUAL OUT OF SERVICE | RMS | CR

LPCS LOGIC POWER FAILURE | AUX DEVICE | CR

LPCS/RHR "A" LOGIC IN TEST | AUX DEVICE | CR

LPCS SUCTION VALVE F001 NOT FULLY OPEN | LIMIT SWITCH | ON VALVE

OVERLOAD OR LOSS OF POWER PUMP C002 | AUX DEVICE | LOCAL

DIV I HCC HVAC OUT OF SERVICE | AUX DEVICE | LOCAL

TYPICAL FOR MO VALVES AND AO VALVES

CB LPCS PUMP COOL OUT OF SERVICE | AUX DEVICE | LOCAL

MOV NETWORK PWR LOSS/OL | AUX DEVICE | LOCAL

BATTERY B1-1 OUT OF SERVICE | AUX DEVICE | LOCAL

DIESEL GENERATOR 1 OUT OF SERVICE | AUX DEVICE | LOCAL

SWA OUT OF SERVICE | AUX DEVICE | LOCAL

LPCS PUMP ROOM HVAC OUT OF SERVICE | AUX DEVICE | LOCAL

DIV I SWGR ROOM HVAC OUT OF SERVICE | AUX DEVICE | LOCAL

LPCS OUT OF SERVICE | AUX DEVICE | CR

CONTROL SW IN "OPEN" POSITION | RMS | CR

CORE SPRAY PUMP FLOW IS BELOW SET POINT | FIS N004 | CR

CONTROL SW IN "CLOSE" POSITION | RMS | F-14

CORE SPRAY PUMP FLOW IS GREATER THAN SET POINT | FIS N004 | F-13

LPCS LOOP INJECTION FLOW C171B

PERMISSIVE WHEN CORE SPRAY PUMP IS RUNNING | 52 | STARTER

SEAL-IN | AUX CONT 42 | B-12

SEAL-IN | AUX CONT 42 | B-12

PERMISSIVE UNLESS VALVE IS FULLY OPEN | LIMIT SWITCH | ON VALVE

PERMISSIVE UNLESS VALVE IS OVER TORQUED WHILE CLOSING | TORQUED SWITCH | ON VALVE

PERMISSIVE UNLESS VALVE IS FULLY CLOSED | LIMIT SWITCH | ON VALVE

OPEN | CLOSE
REVERSING CONTACTOR 42

CORE SPRAY PUMP MIN. FLOW BYPASS VALVE MO F011

2 POSITION SWITCH "CLOSE"-"OPEN" MAINTAINED CONTACTS KEYLOCK IN "OPEN" POSITION

CONTROL SW IN "OPEN" POSITION | RMS | CR

CONTROL SW IN "CLOSE" POSITION | RMS | D-8

PERMISSIVE UNLESS VALVE IS FULLY OPEN | LIMIT SWITCH | ON VALVE

PERMISSIVE UNLESS VALVE IS FULLY CLOSED | LIMIT SWITCH | ON VALVE

PERMISSIVE UNLESS VALVE IS OVER-TORQUED WHILE CLOSING | TORQUE SWITCH | ON VALVE

OPEN | CLOSE
REVERSING CONTACTOR 42

CORE SPRAY PUMP SUCTION VALVE MO F001

CONTROL SW IN "START" POSITION | RMS | CR

MOTOR OVERLOAD | 49/OL | STARTER

CONTROL SW IN "STOP" POSITION | RMS | D-6

PERMISSIVE UNLESS OVERLOAD SIGNAL IS PRESENT | AUX DEVICE | LOCAL

START | STOP
CONTACTOR 42

WATER LEG PUMP C002

PUSHBUTTON IN "DEPRESSED" POSITION | PB | CR

AIR SUPPLY

EXHAUST

PERMISSIVE WHEN SOLENOID IS ENERGIZED

SOLENOID PILOT VALVE | SOL PILOT | LOCAL

PERMISSIVE WHEN SOLENOID IS DE-ENERGIZED

SOLENOID ENERGIZED VALVE OPEN | AO-F006 | LOCAL

TESTABLE CHECK VALVE AO-F006

Columbia Generating Station
Final Safety Analysis Report

Low Pressure Core Spray System - FCD

Draw. No. 02E21-04,6,2 | Rev. 3 | Figure 7.3-9.2

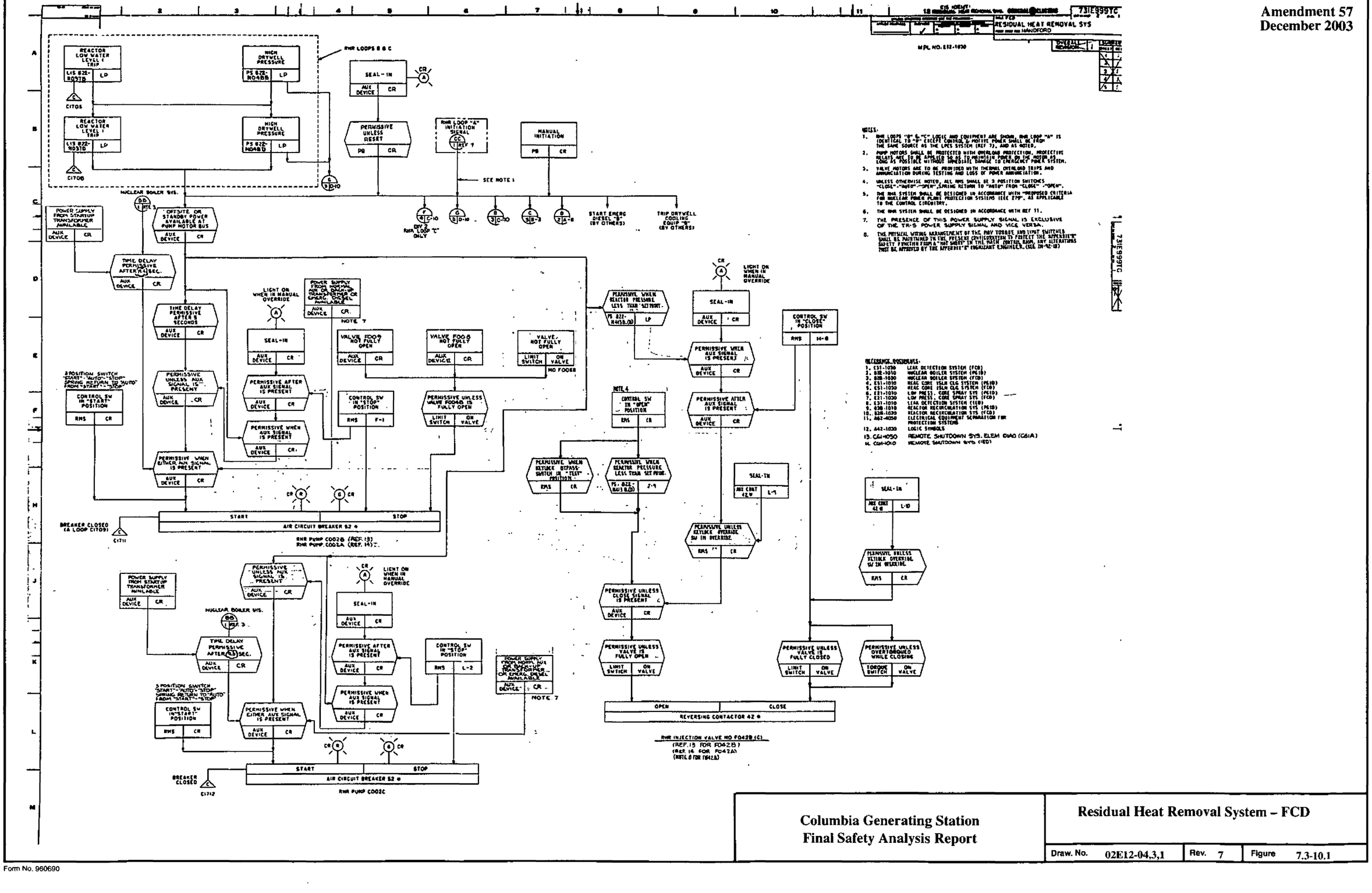

Columbia Generating Station Final Safety Analysis Report	**Residual Heat Removal System – FCD**		
	Draw. No. 02E12-04,3,1	Rev. 7	Figure 7.3-10.1

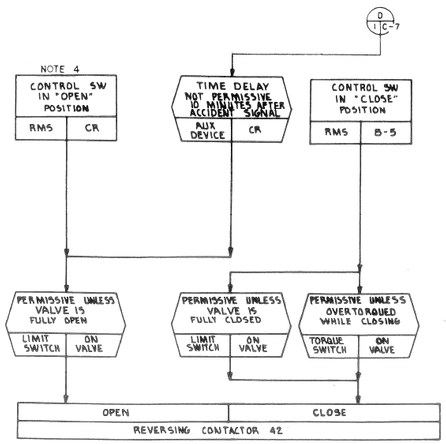

HEAT EXCHANGER SHELL - SIDE BYPASS
VALVE NO. F048B (THROTTLING TYPE REF. 13)
F048A (REF. 14)
NOTE 8 FOR F048B

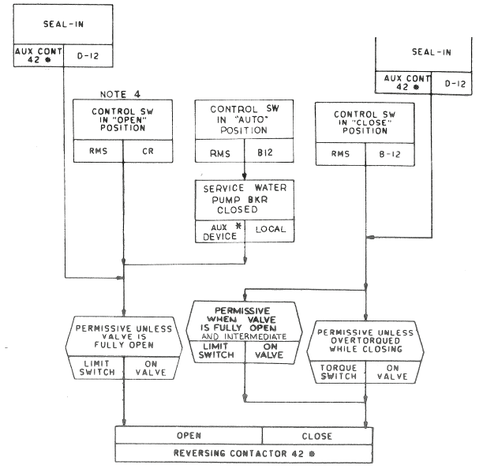

HEAT EXCHANGER SERVICE
WATER DISCHARGE VALVE NO F068B (REF. 13)
NOTE 8 FOR F068B

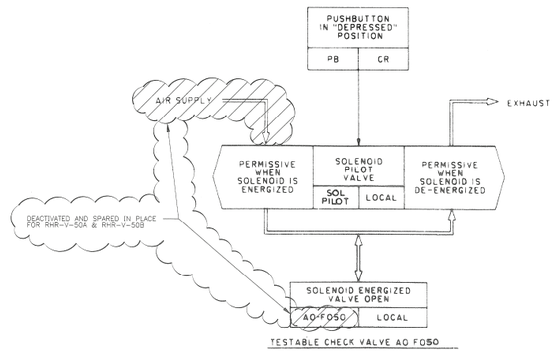

TESTABLE CHECK VALVE AO F050

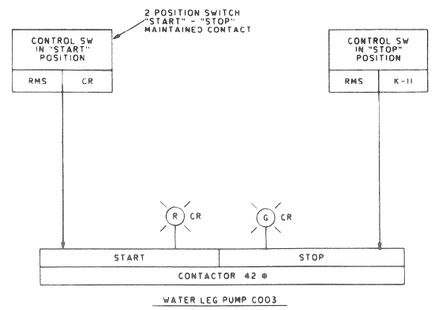

WATER LEG PUMP C003

Columbia Generating Station
Final Safety Analysis Report

Residual Heat Removal System - FCD

Draw. No. 02E12-04,3,2	Rev. 7	Figure 7.3-10.2

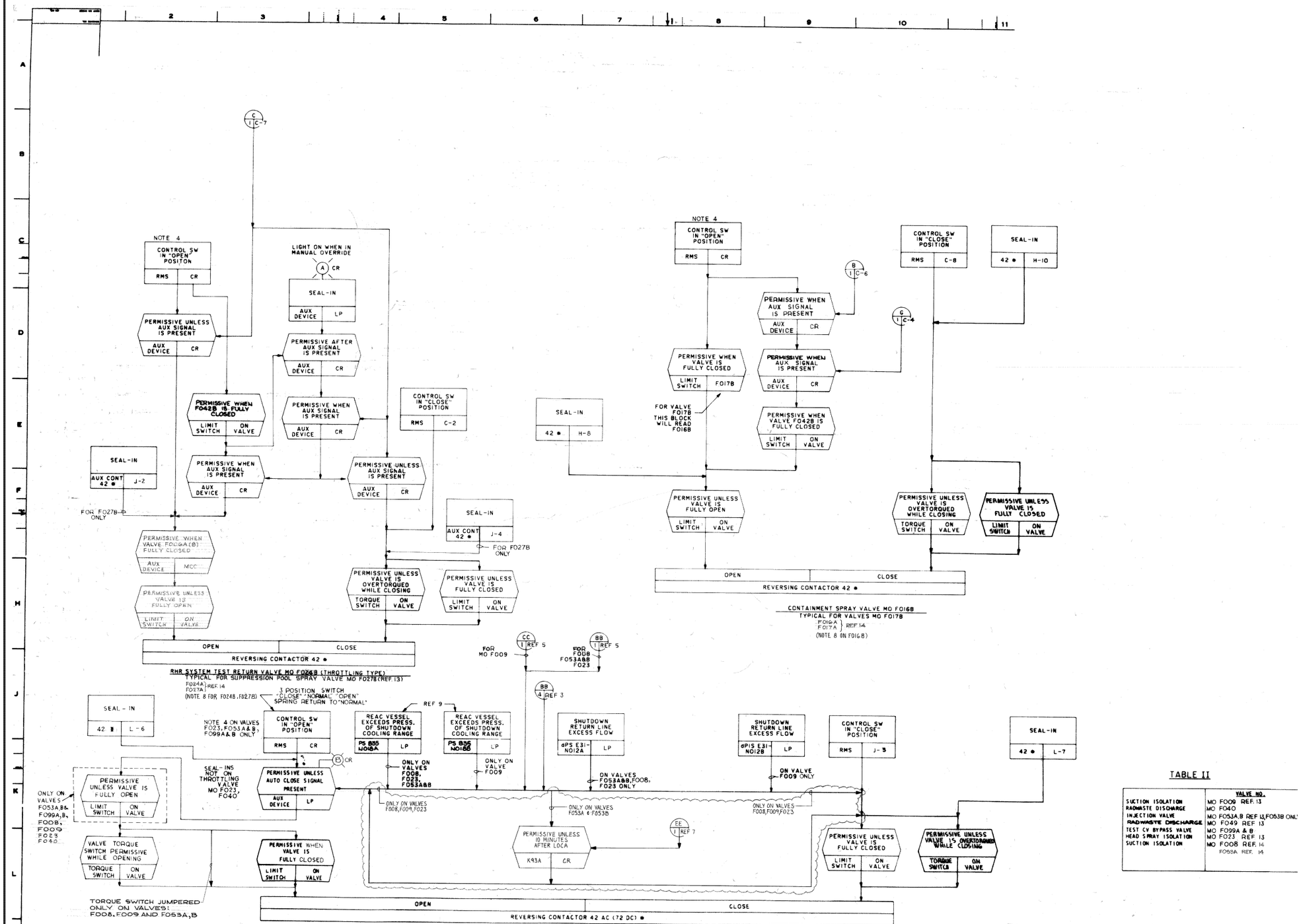

TABLE II

	VALVE NO.
SUCTION ISOLATION	MO F009 REF. 13
RADWASTE DISCHARGE	MO F040
INJECTION VALVE	MO F053A, B REF 13, F053B ONLY
RADWASTE DISCHARGE	MO F049 REF. 13
TEST CV BYPASS VALVE	MO F099A & B
HEAD SPRAY ISOLATION	MO F023 REF. 13
SUCTION ISOLATION	MO F008 REF. 14
	F053A REF. 14

Columbia Generating Station
Final Safety Analysis Report

Residual Heat Removal System - FCD

Draw. No. 02E12-04,3,3 | Rev. 9 | Figure 7.3-10.3

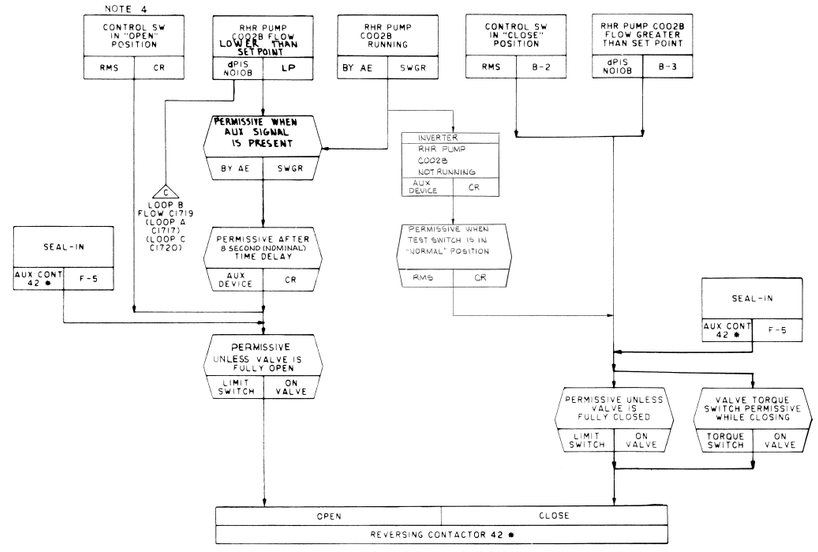

RHR MIN FLOW VALVE MO F064B
TYPICAL FOR MO F064C
F044A (REF 4)
(NOTE B FOR F064B)

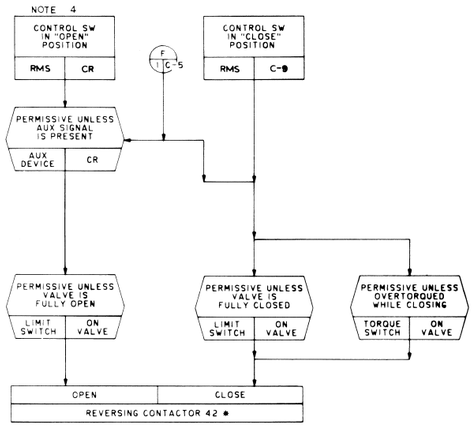

RHR TEST RETURN VALVE MO F021
(THROTTLING)

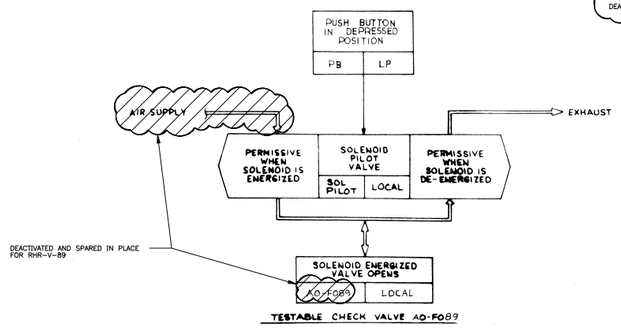

TESTABLE CHECK VALVE AO-F089

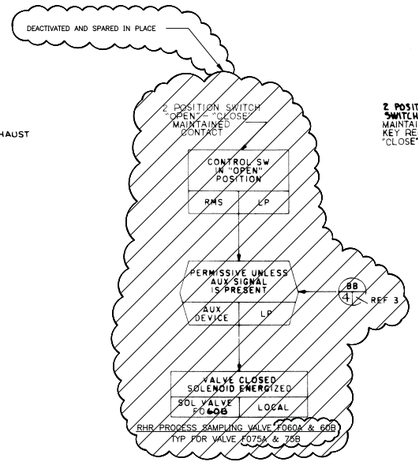

RHR PROCESS SAMPLING VALVE F060A & 60B
TYP FOR VALVE F075A & 75B

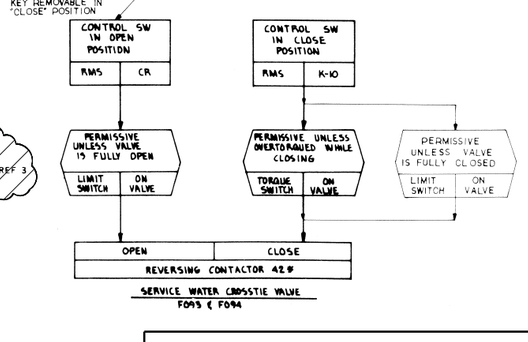

SERVICE WATER CROSSTIE VALVE
F093 & F094

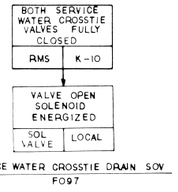

SERVICE WATER CROSSTIE DRAIN SOV
F097

Columbia Generating Station
Final Safety Analysis Report

Residual Heat Removal System - FCD

Draw. No. 02E12-04,3,4	Rev. 7	Figure 7.3-10.4

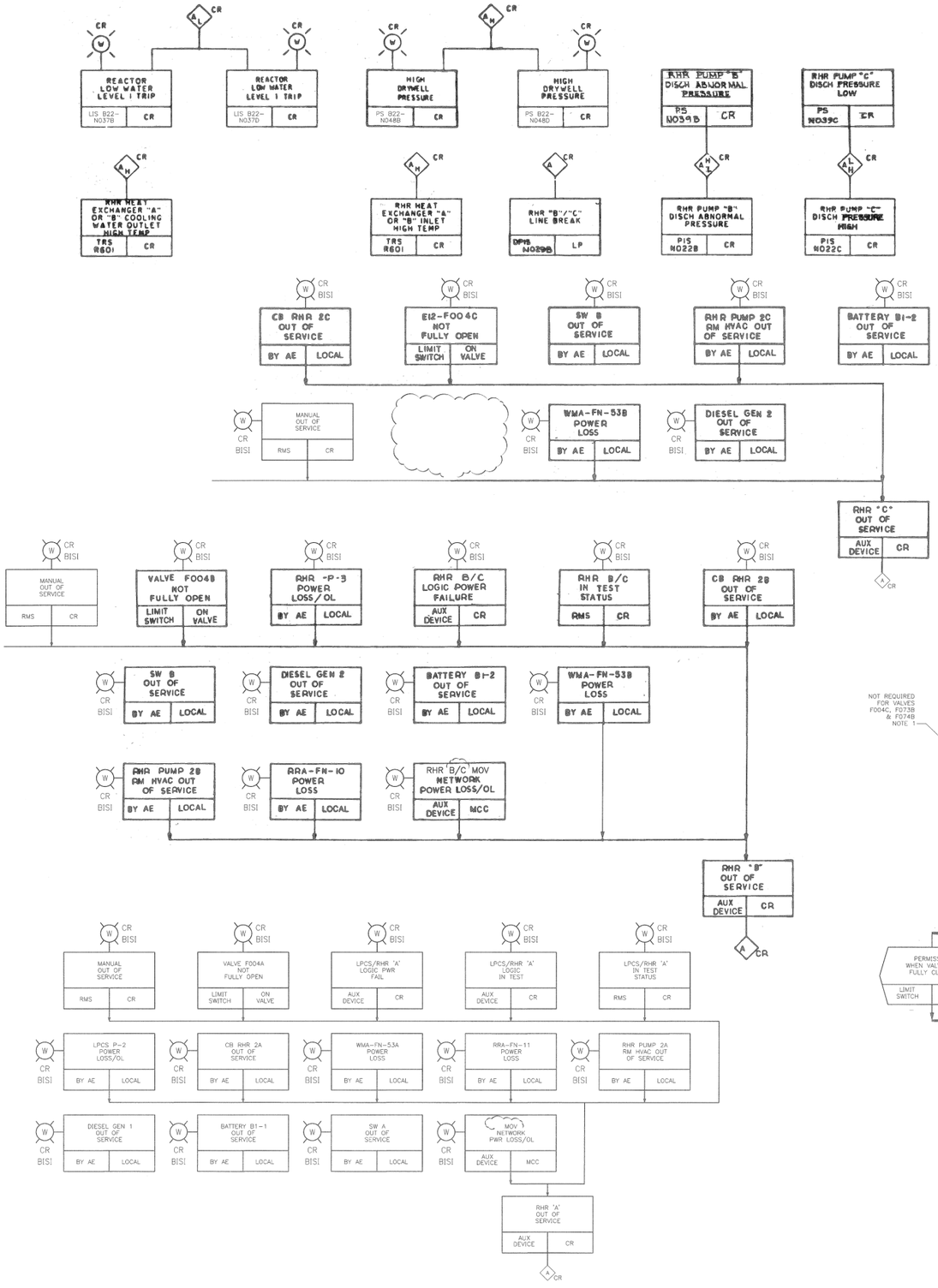

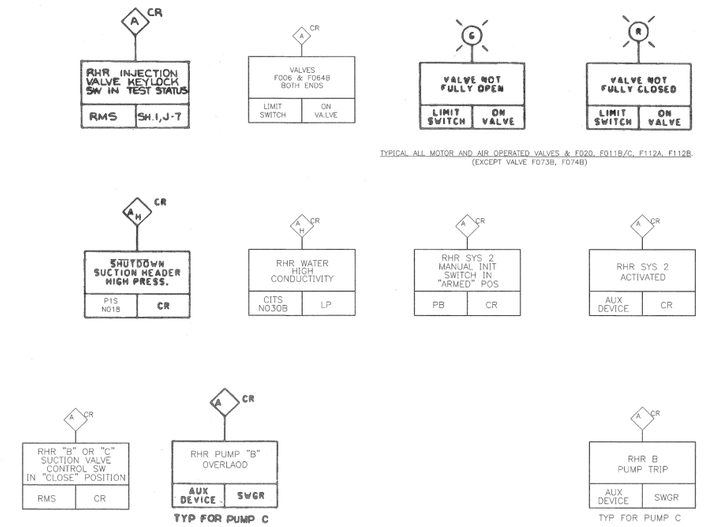

TABLE I

VALVE DESCRIPTION	VALVE NUMBER	SWITCH DESCRIPTION
H_2 VENT VALVES	F073B & F074B	3 POS. SW "OPEN" – "STOP" – "CLOSE" MAINTAINED CONTACTS
SHUTDOWN COOLING SUCTION VALVE H_2 SW INLET VALVE	F006B (REF. 13) F006A (REF. 14)	2 POSITION SW "CLOSE"-"OPEN" MAINTAINED CONTACTS
RHR PUMP SUCTION VALVE H_2 INLT VALVE (NOTE 2)	F004A (REF. 14) F004B (REF. 13) AND F004C F047B (REF. 13) F047A (REF. 14)	2 POSITION KEYLOCK SW "CLOSE" – "OPEN" MAINTAINED CONTACTS KEY REMOVABLE IN "OPEN" POSITION
H_2 OUTLET VALVE	F003B (REF. 13) F003A (REF. 14)	3 POSITION SWITCH SPRING RETURN TO CENTER "CLOSE-NORMAL-OPEN"

NOTES:

1. CONTROL SWITCHES ARE LOCATED IN THE ALTERNATE REMOTE SHUTDOWN PANEL E-CP-ARS FOR VALVES F003A, F004A, & F006A; AND IN THE REMOTE SHUTDOWN PANEL E-CP-C61/P601 FOR VALVES F003B, F004B, & F006B.
2. VALVES RHR-V-47A AND RHR-V-47B HAVE BEEN DEACTIVATED; THE ELECTRICAL POWER, CONTROL ROOM AND REMOTE SHUTDOWN CONTROL SWITCHES, PANEL WIRING AND FIELD CABLES (EXCEPT AT THE VALVES DUE TO RADIOLOGICAL CONCERNS) HAVE BEEN REMOVED.

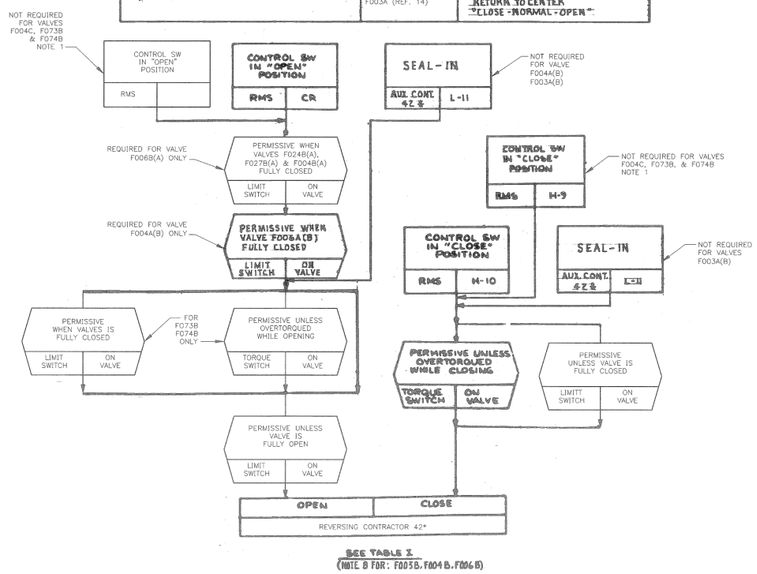

SEE TABLE I
(NOTE 8 FOR: F005B, F004B, F006B)

Columbia Generating Station
Final Safety Analysis Report

Residual Heat Removal System - FCD

Draw. No. 02E12-04,3,5	Rev. 12	Figure 07.3-10.5

DELETED

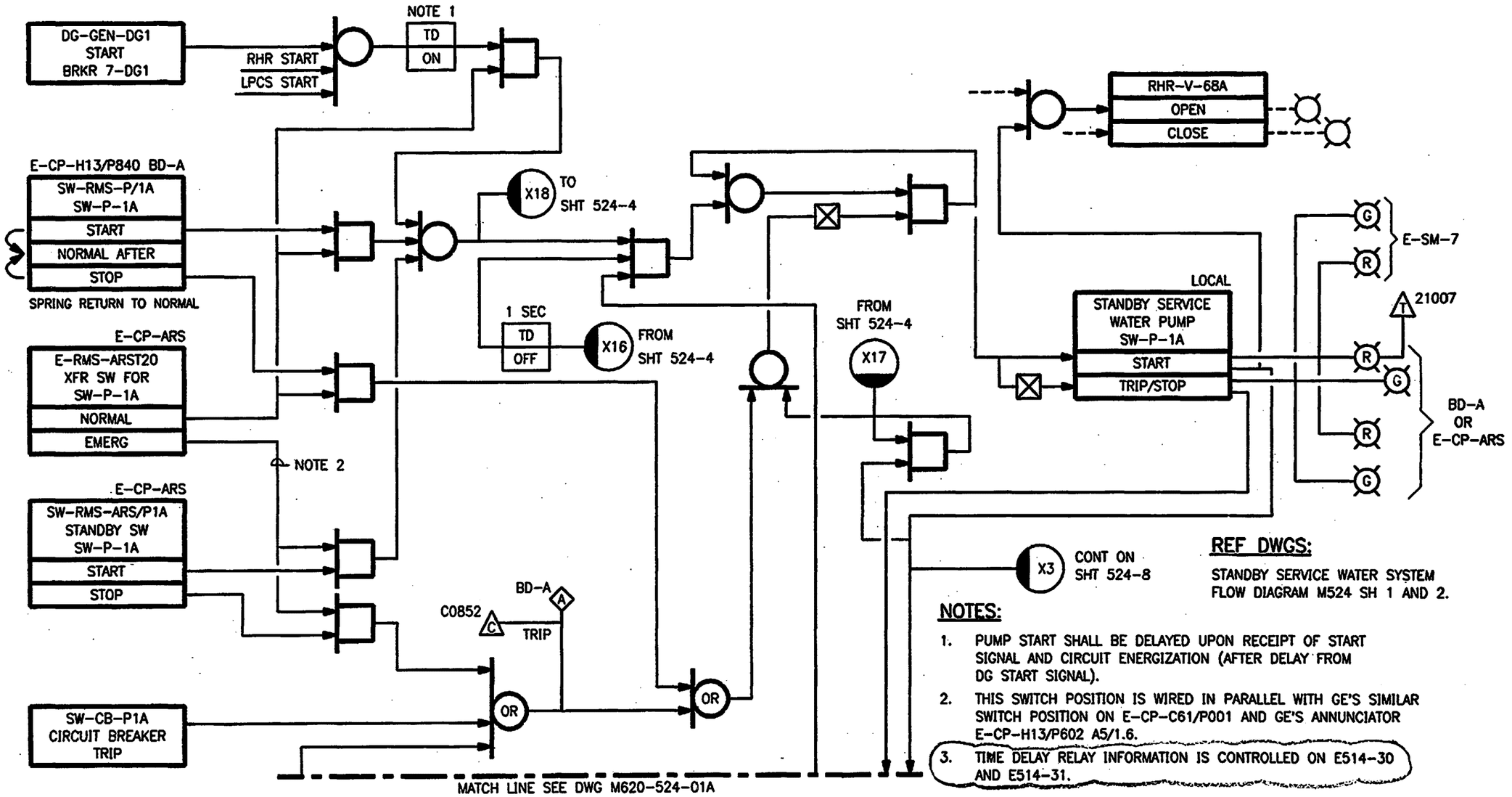

REF DWGS:

STANDBY SERVICE WATER SYSTEM
FLOW DIAGRAM M524 SH 1 AND 2.

NOTES:

1. PUMP START SHALL BE DELAYED UPON RECEIPT OF START SIGNAL AND CIRCUIT ENERGIZATION (AFTER DELAY FROM DG START SIGNAL).
2. THIS SWITCH POSITION IS WIRED IN PARALLEL WITH GE'S SIMILAR SWITCH POSITION ON E-CP-C61/P001 AND GE'S ANNUNCIATOR E-CP-H13/P602 A5/1.6.
3. TIME DELAY RELAY INFORMATION IS CONTROLLED ON E514-30 AND E514-31.

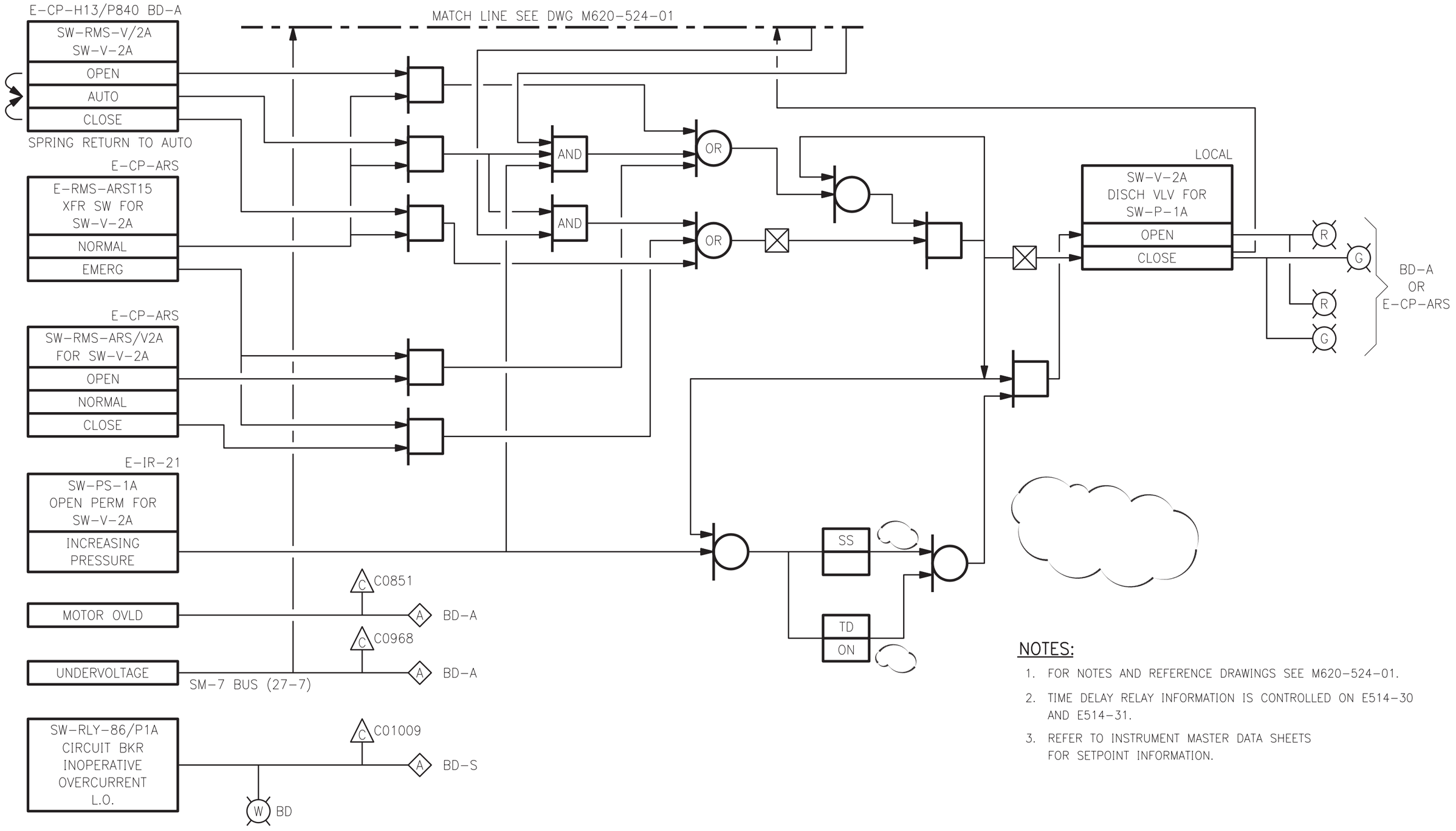

NOTES:

1. FOR NOTES AND REFERENCE DRAWINGS SEE M620-524-01.
2. TIME DELAY RELAY INFORMATION IS CONTROLLED ON E514-30 AND E514-31.
3. REFER TO INSTRUMENT MASTER DATA SHEETS FOR SETPOINT INFORMATION.

Columbia Generating Station **Final Safety Analysis Report**	**Control Logic Diagram - Standby Service Water System**		
	Draw. No. M620-524-1A	**Rev.** 5	**Figure** 07.3-12.2

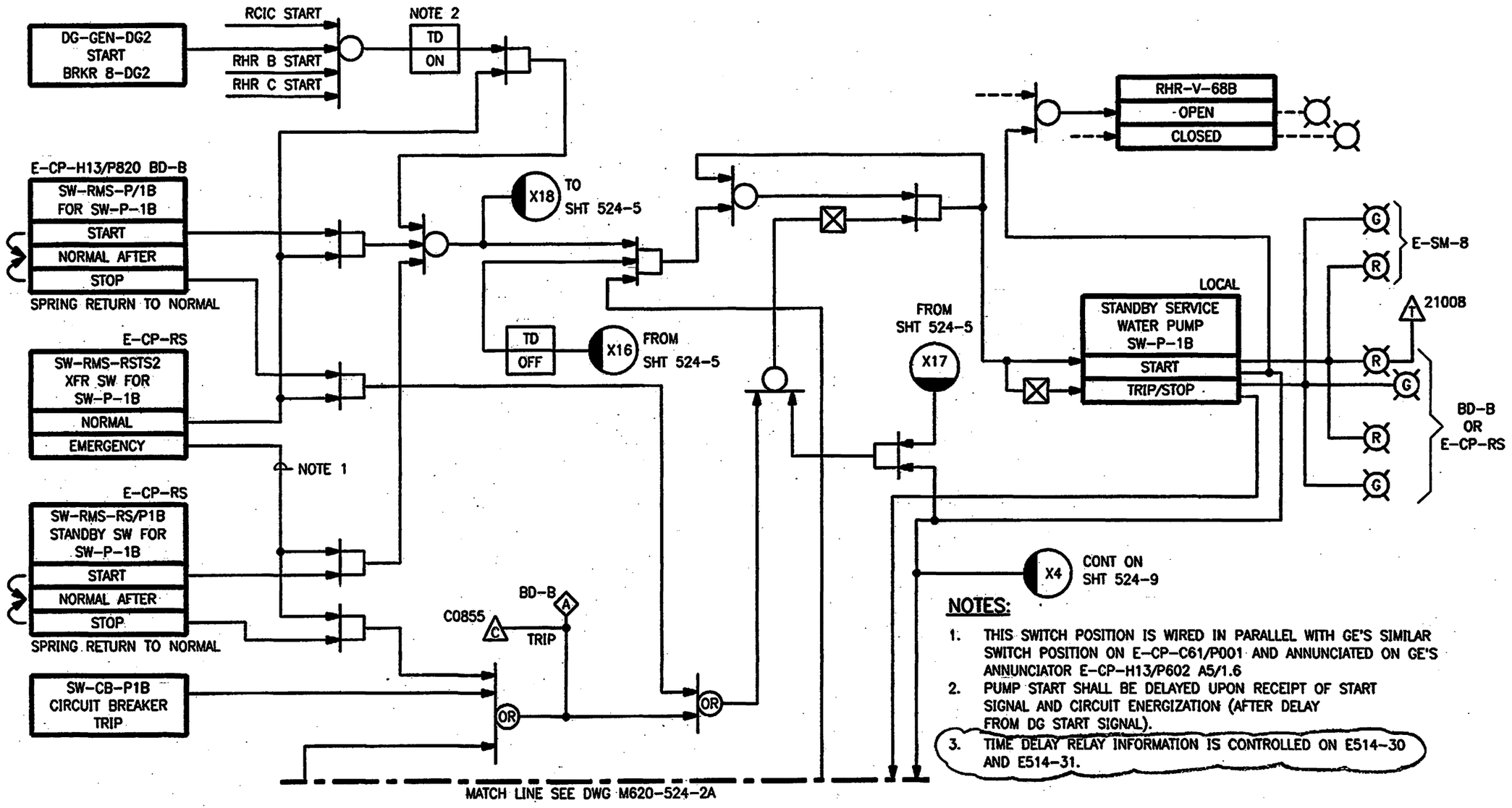

NOTES:

1. THIS SWITCH POSITION IS WIRED IN PARALLEL WITH GE'S SIMILAR SWITCH POSITION ON E-CP-C61/P001 AND ANNUNCIATED ON GE'S ANNUNCIATOR E-CP-H13/P602 A5/1.6
2. PUMP START SHALL BE DELAYED UPON RECEIPT OF START SIGNAL AND CIRCUIT ENERGIZATION (AFTER DELAY FROM DG START SIGNAL).
3. TIME DELAY RELAY INFORMATION IS CONTROLLED ON E514-30 AND E514-31.

Columbia Generating Station Final Safety Analysis Report	Control Logic Diagram - Standby Service Water System		
	Draw. No. M620-524-2	Rev. 13	Figure 7.3-12.3

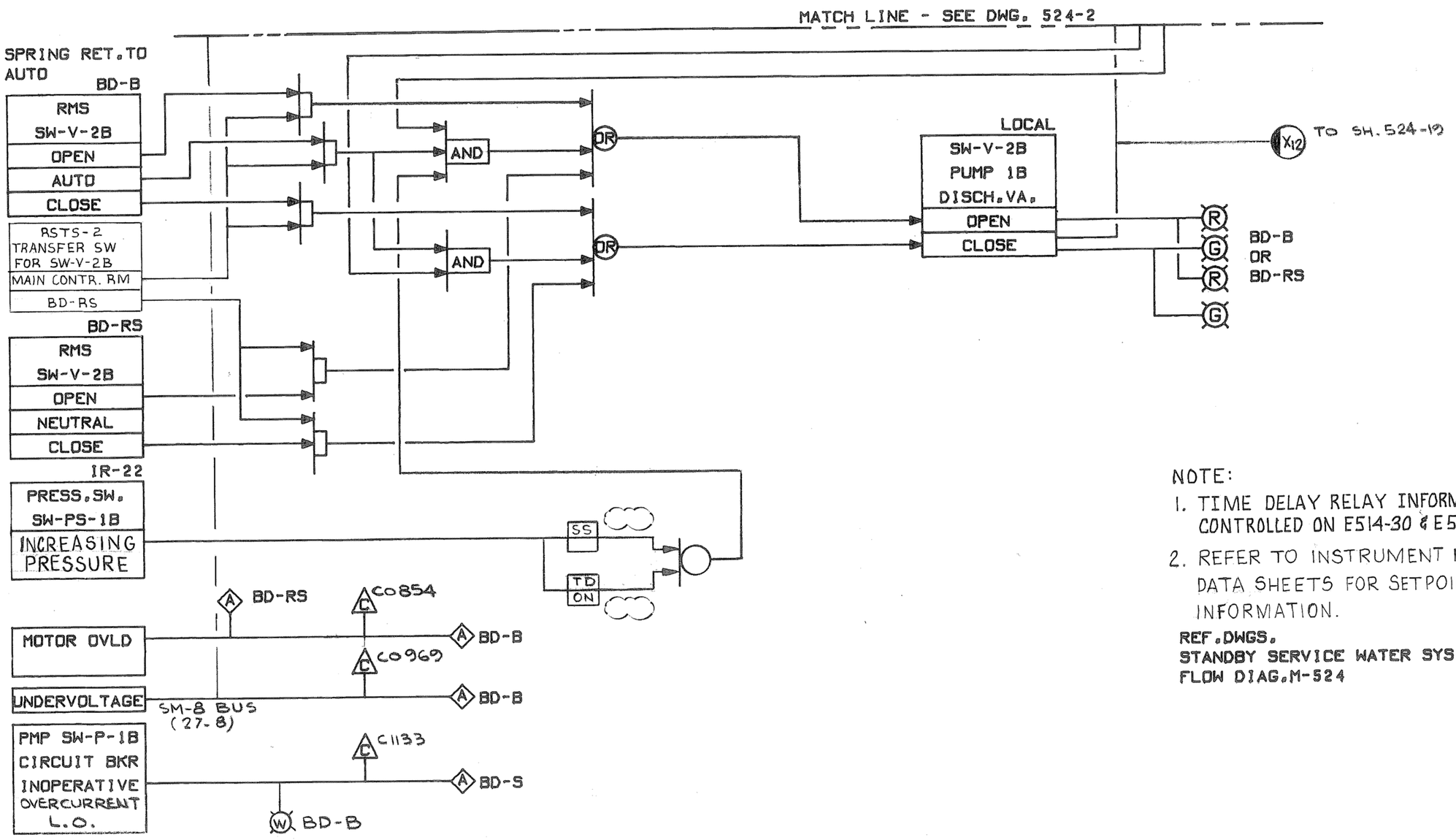

NOTE:

1. TIME DELAY RELAY INFORMATION IS CONTROLLED ON E514-30 & E514-31.
2. REFER TO INSTRUMENT MASTER DATA SHEETS FOR SETPOINT INFORMATION.

REF. DWGS.
STANDBY SERVICE WATER SYS.
FLOW DIAG. M-524

Columbia Generating Station Final Safety Analysis Report	Control Logic Diagram - Standby Service Water System		
	Draw. No. M620-524-2A	Rev. 10	Figure 07.3-12.4

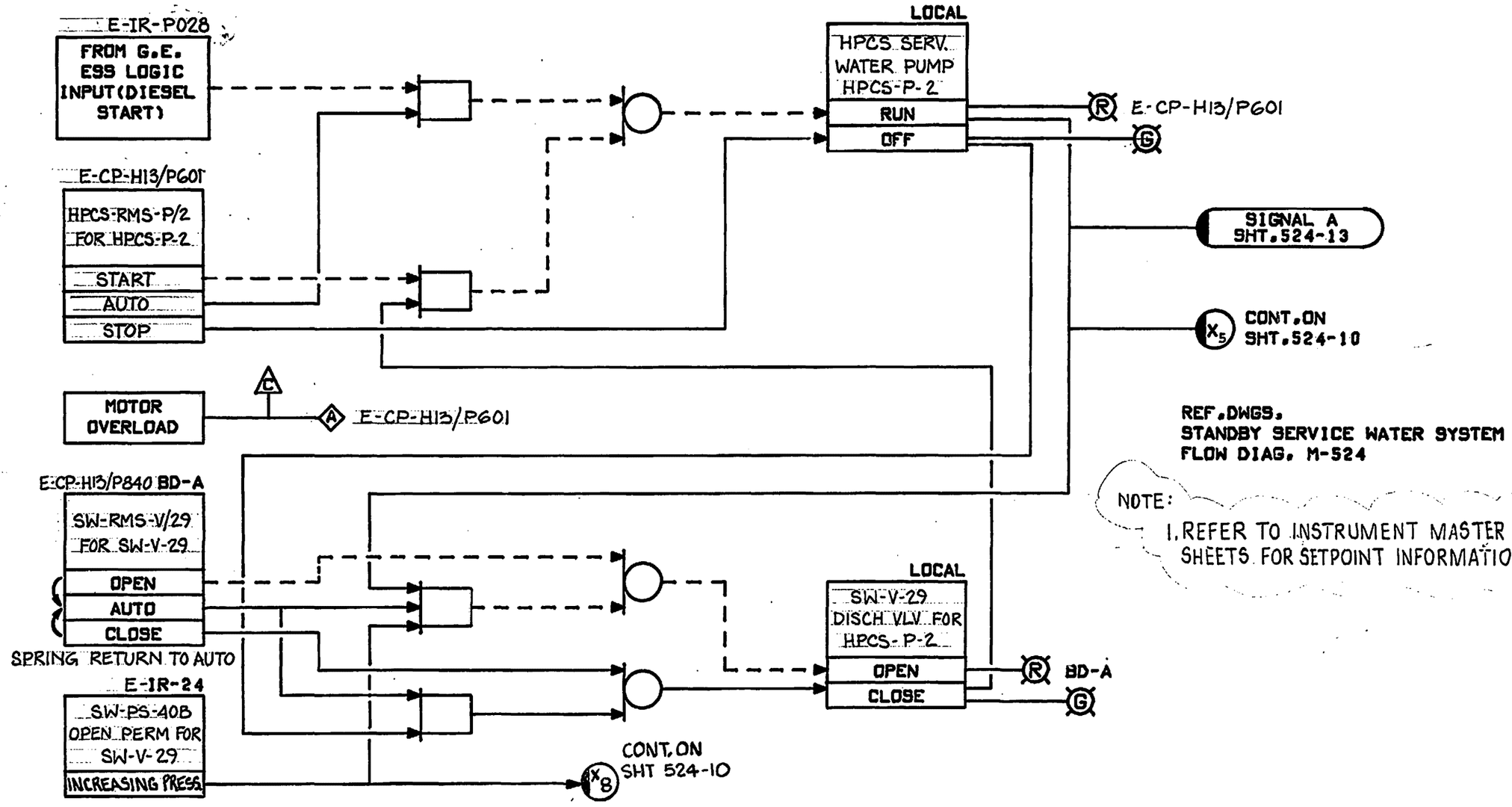

Columbia Generating Station Final Safety Analysis Report	Control Logic Diagram - Standby Service Water System		
	Draw. No. M620-524-3	Rev. 8	Figure 7.3-12.5

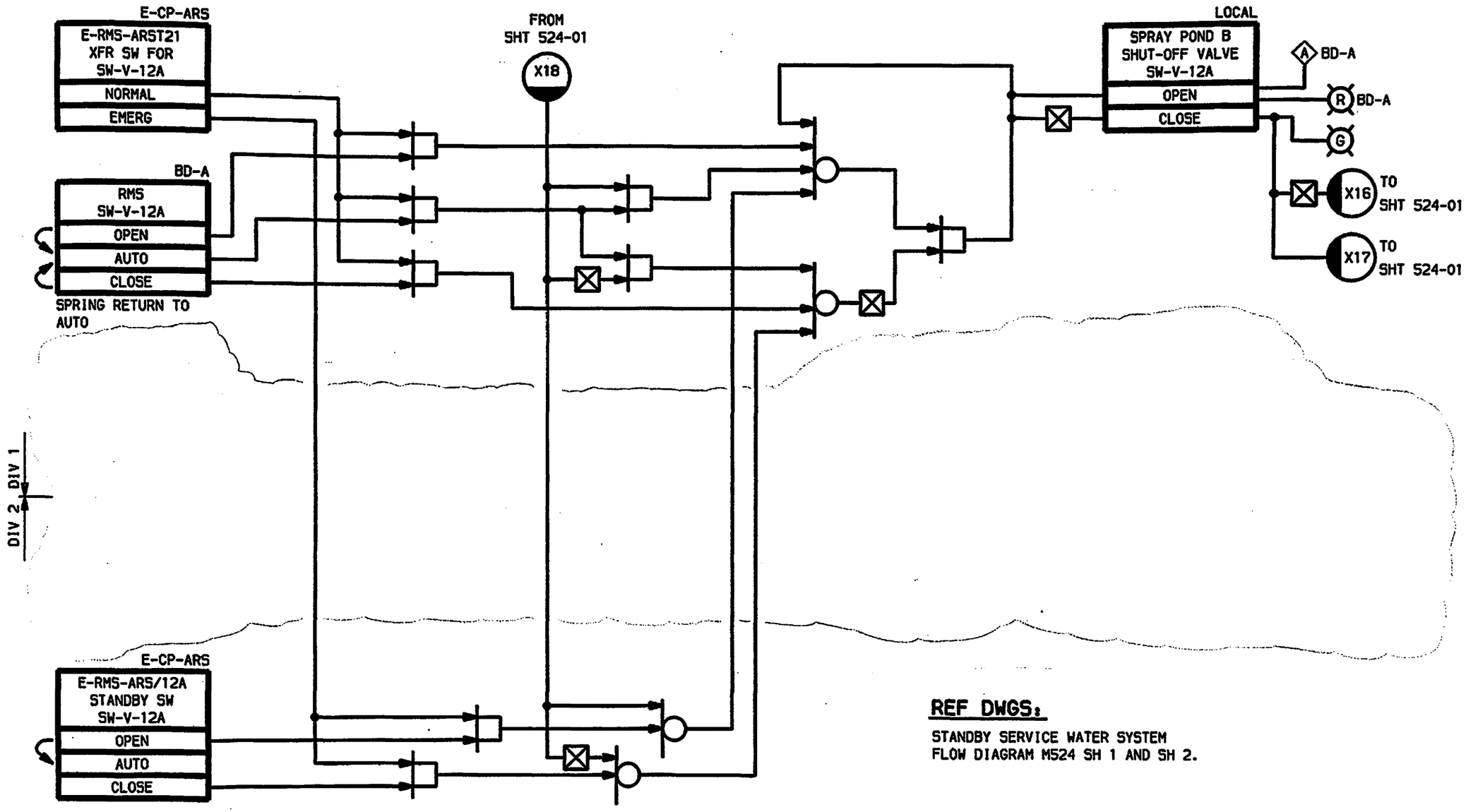

REF DWGS:

STANDBY SERVICE WATER SYSTEM
FLOW DIAGRAM M524 SH 1 AND SH 2.

Columbia Generating Station Final Safety Analysis Report	Control Logic Diagram - Standby Service Water System		
	Draw. No. M620-524-4	Rev. 12	Figure 7.3-12.6

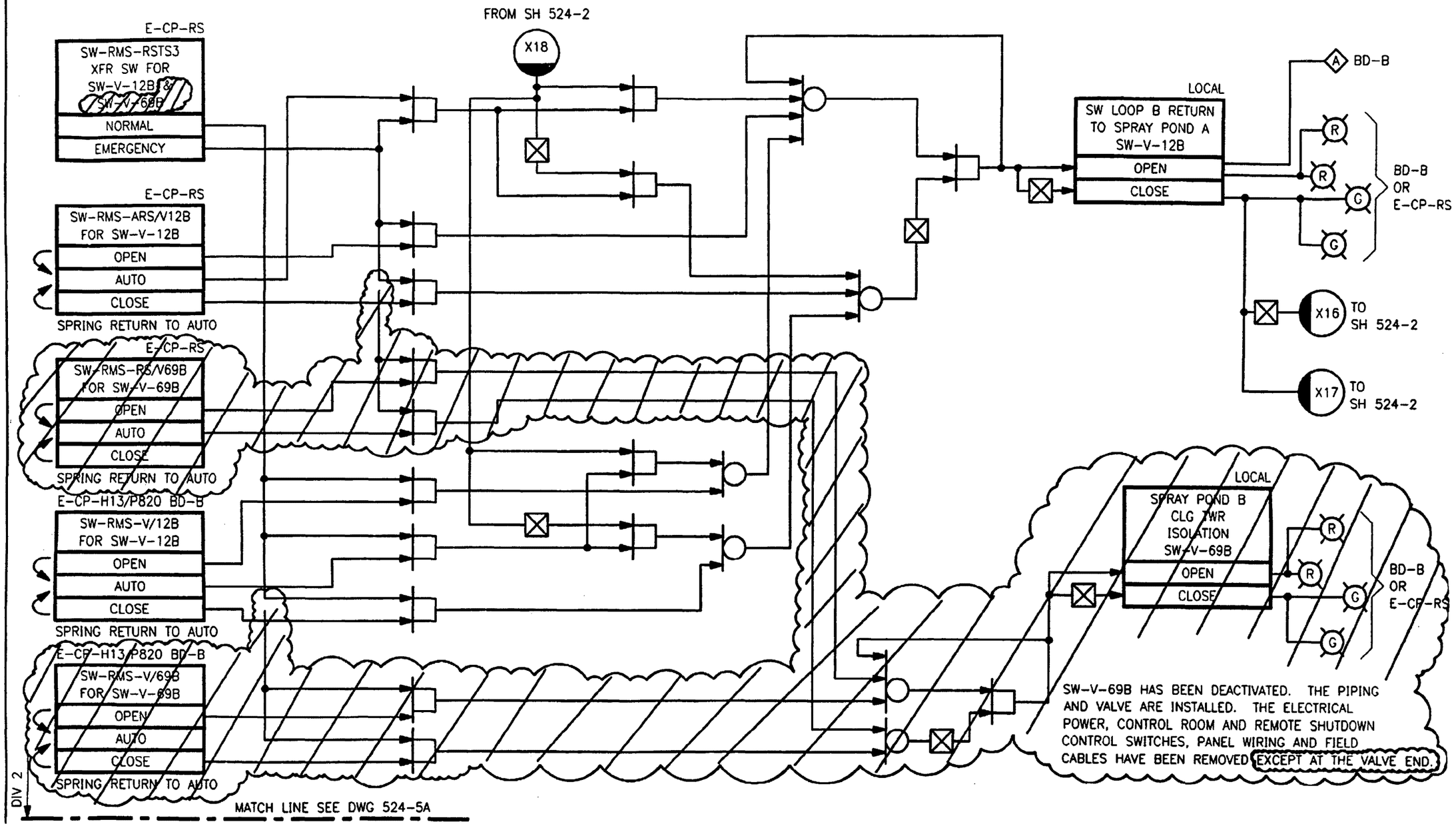

Columbia Generating Station Final Safety Analysis Report	Control Logic Diagram – Standby Service Water System		
	Draw. No. M620-524-5	Rev. 15	Figure 7.3-12.7

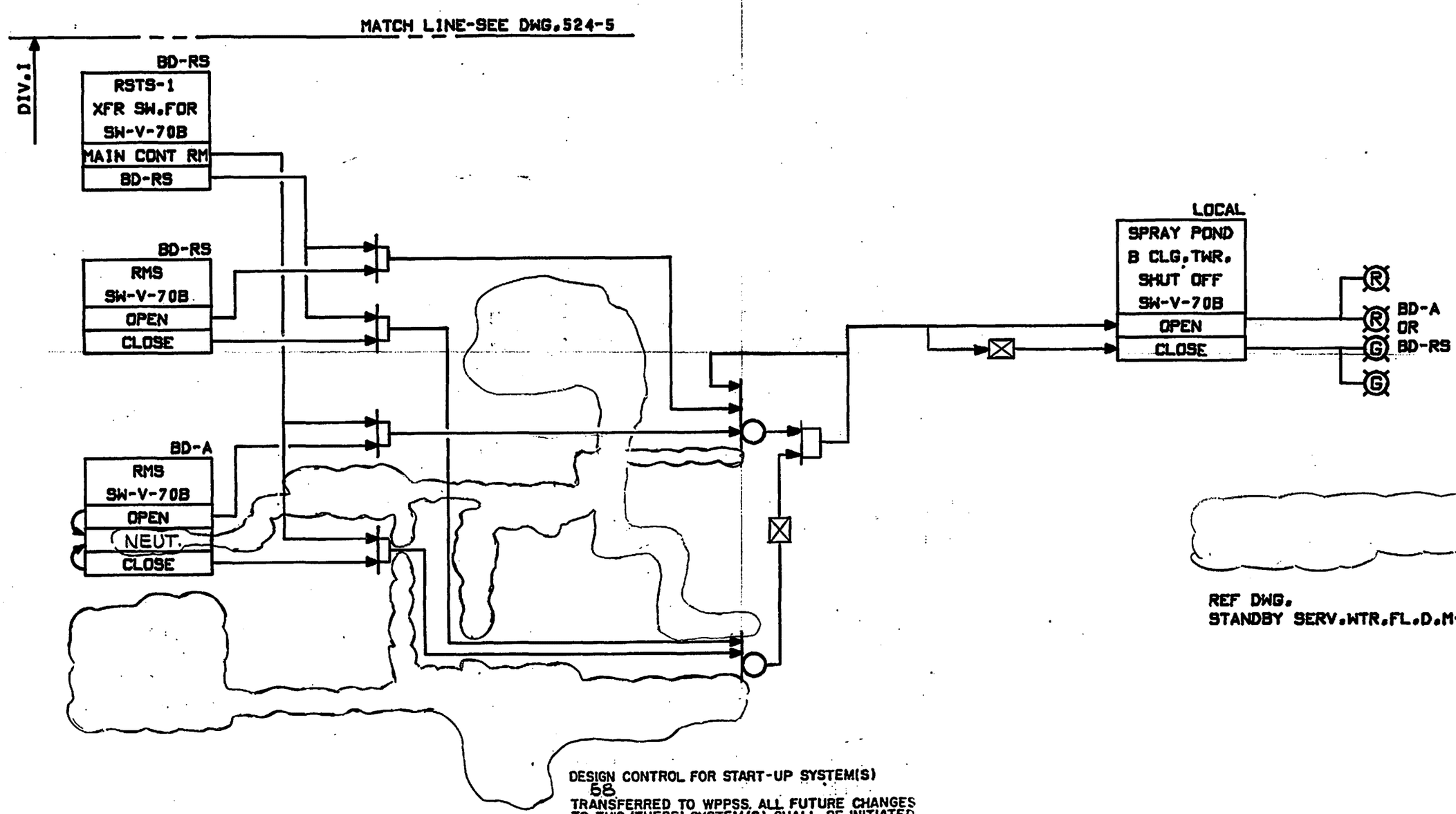

Columbia Generating Station Final Safety Analysis Report	Control Logic Diagram - Standby Service Water System		
	Draw. No. M620-524-5A	Rev. 10	Figure 7.3-12.8

DESIGN CONTROL FOR START-UP SYSTEM(S)
55
TRANSFERRED TO WPPSS. ALL FUTURE CHANGES TO THIS (THESE) SYSTEM(S) SHALL BE INITIATED AND APPROVED BY THE SUPPLY SYSTEM. ALL REVISIONS TO THIS DRAWING REQUIRE APPROVAL OF THE SUPPLY SYSTEM

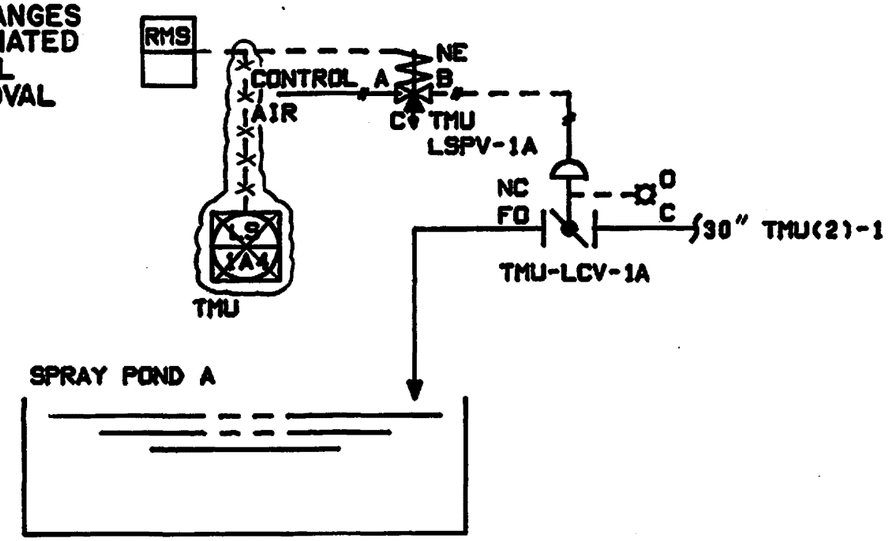

REF DWG.
STANDBY SERVICE WATER FL.-D M-524

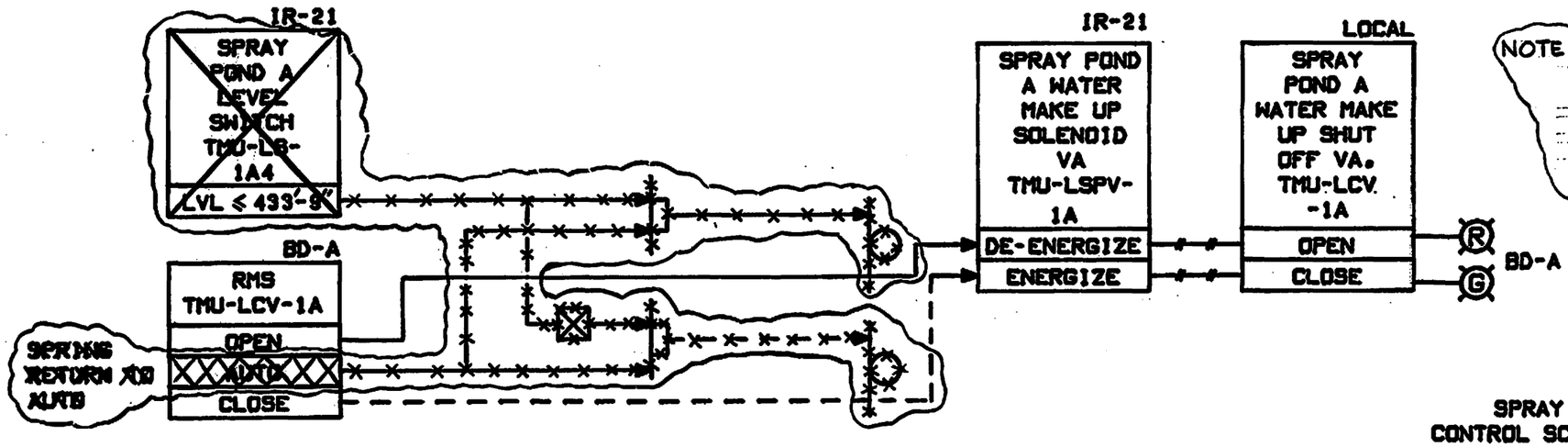

NOTE:
TMU-LS-1A4 HAS BEEN DISCONNECTED FROM THE SYSTEM. HOWEVER, TO REESTABLISH AUTO LEVEL CONTROL AT A LATER DATE, THE SWITCH HAS NOT BEEN REMOVED. DCRB #154

DIV. 1

SPRAY POND A WATER MAKE-UP
CONTROL SCHEMATIC AND LOGIC DIAGRAM

Columbia Generating Station Final Safety Analysis Report	Control Logic Diagram - Standby Service Water System		
	Draw. No. M620-524-6	Rev. 4	Figure 7.3-12.9

DESIGN CONTROL FOR START-UP SYSTEM(S)
35

TRANSFERRED TO WPPSS. ALL FUTURE CHANGES TO THIS (THESE) SYSTEM(S) SHALL BE INITIATED AND APPROVED BY THE SUPPLY SYSTEM. ALL REVISIONS TO THIS DRAWING REQUIRE APPROVAL OF THE SUPPLY SYSTEM

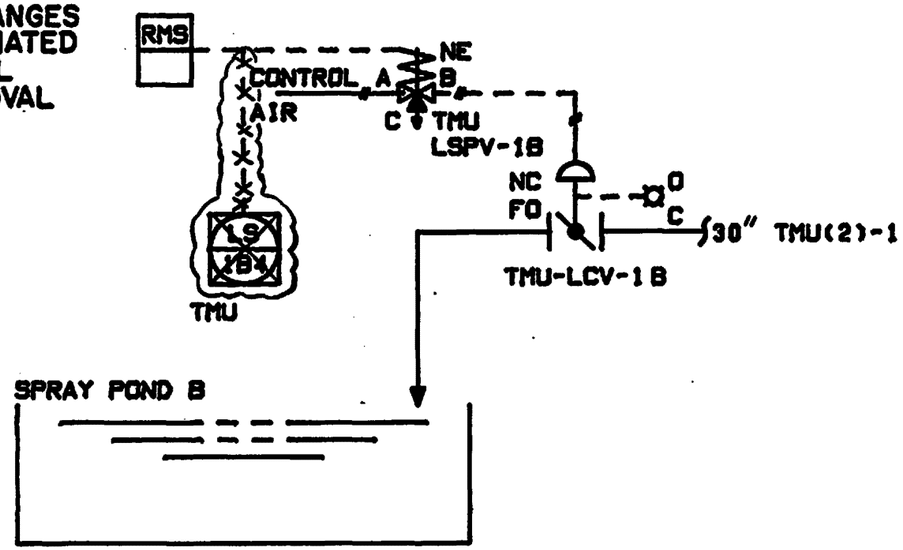

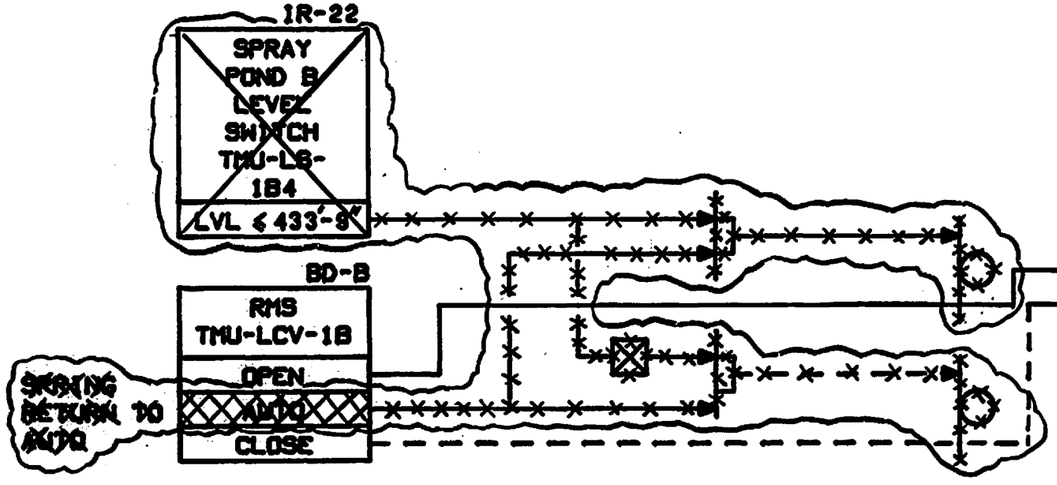

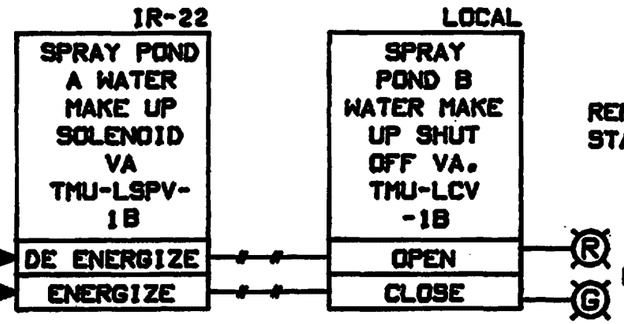

REF DWG.
STANDBY SERVICE WATER FL.D. M-524

DIV. II

SPRAY POND B WATER MAKE-UP
CONTROL SCHEMATIC AND LOGIC DIAGRAM

NOTE
TMU-LS-1B4 HAS BEEN DISCONNECTED FROM THE SYSTEM. HOWEVER TO REESTABLISH AUTO LEVEL CONTROL AT A LATER DATE, THE SWITCH HAS NOT BEEN REMOVED. DCRB#154

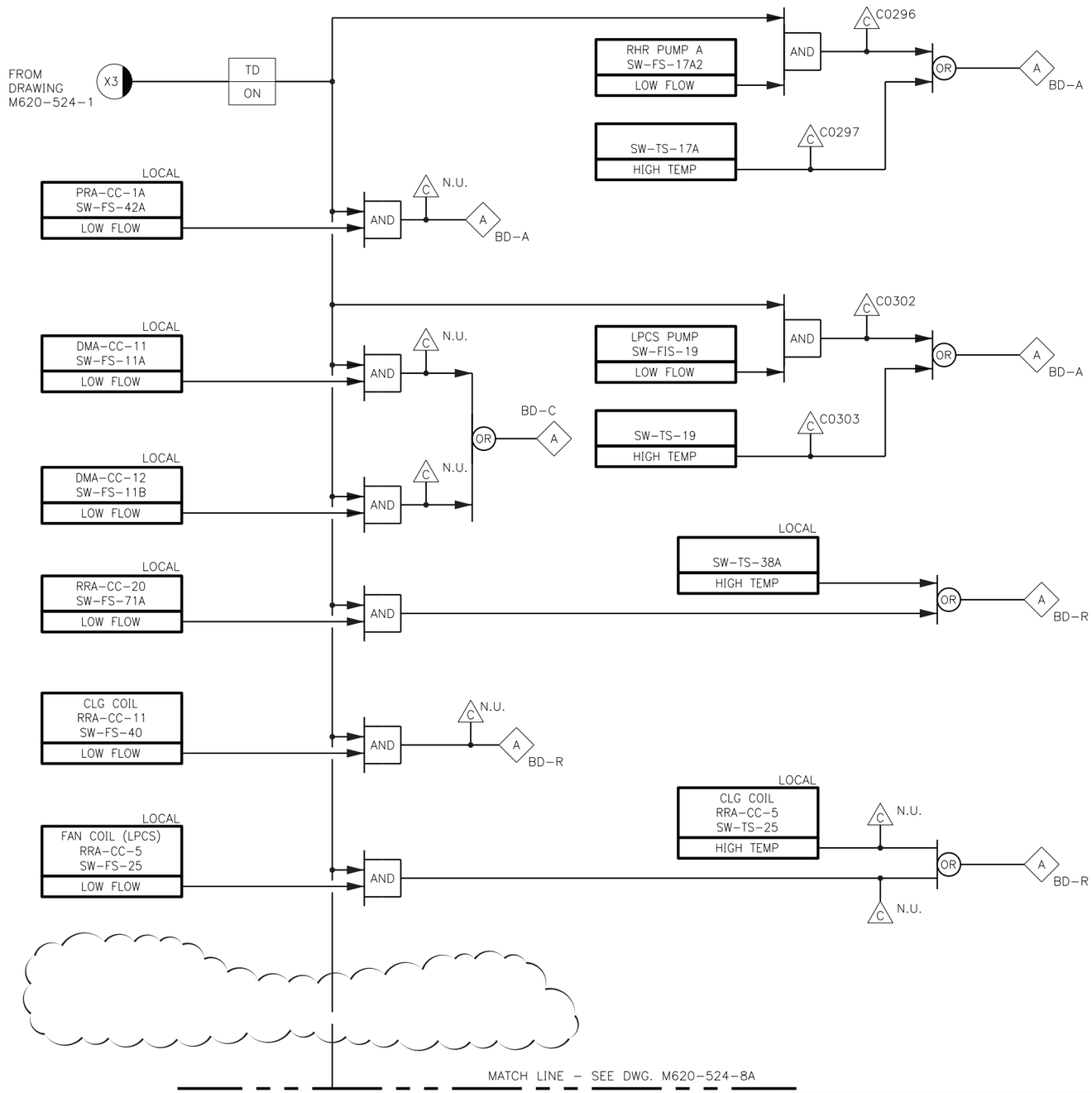

NOTES:

1. TIME DELAY RELAY INFORMATION IS CONTROLLED ON E514-30 AND E514-31.
2. REFER TO INSTRUMENT MASTER DATA SHEETS FOR SETPOINT INFORMATION.
3. COMPUTER INPUTS LABELED N.U. ARE NOT USED.

Columbia Generating Station
Final Safety Analysis Report

Control Logic Diagram - Standby Service Water System

Draw. No. M620-524-8	Rev. 16	Figure 07.3-12.11

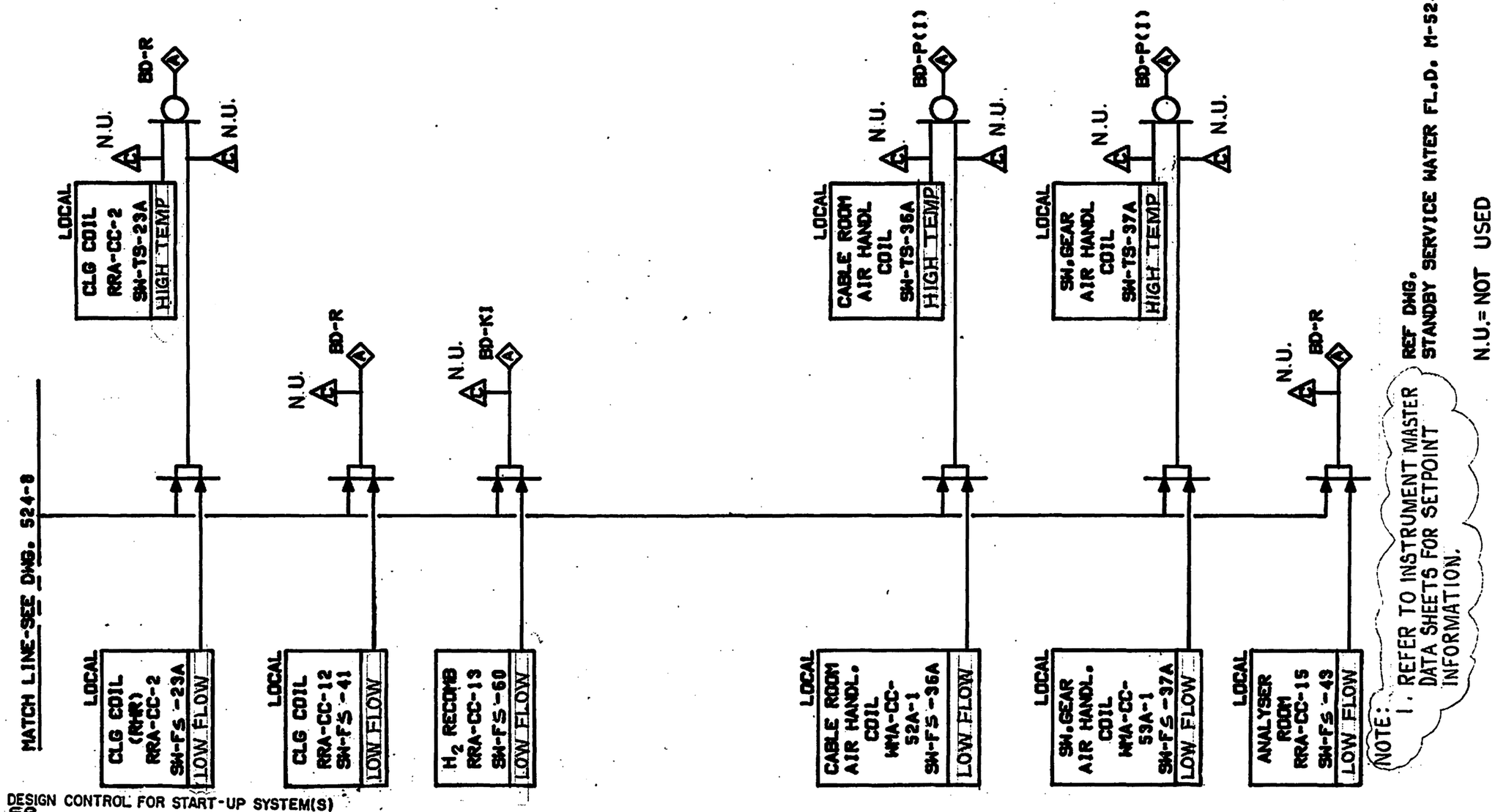

DESIGN CONTROL FOR START-UP SYSTEM(S) 58
TRANSFERRED TO WPPSS. ALL FUTURE CHANGES TO THIS (THESE) SYSTEM(S) SHALL BE INITIATED AND APPROVED BY THE SUPPLY SYSTEM. ALL REVISIONS TO THIS DRAWING REQUIRE APPROVAL OF THE SUPPLY SYSTEM

FSAR FIG

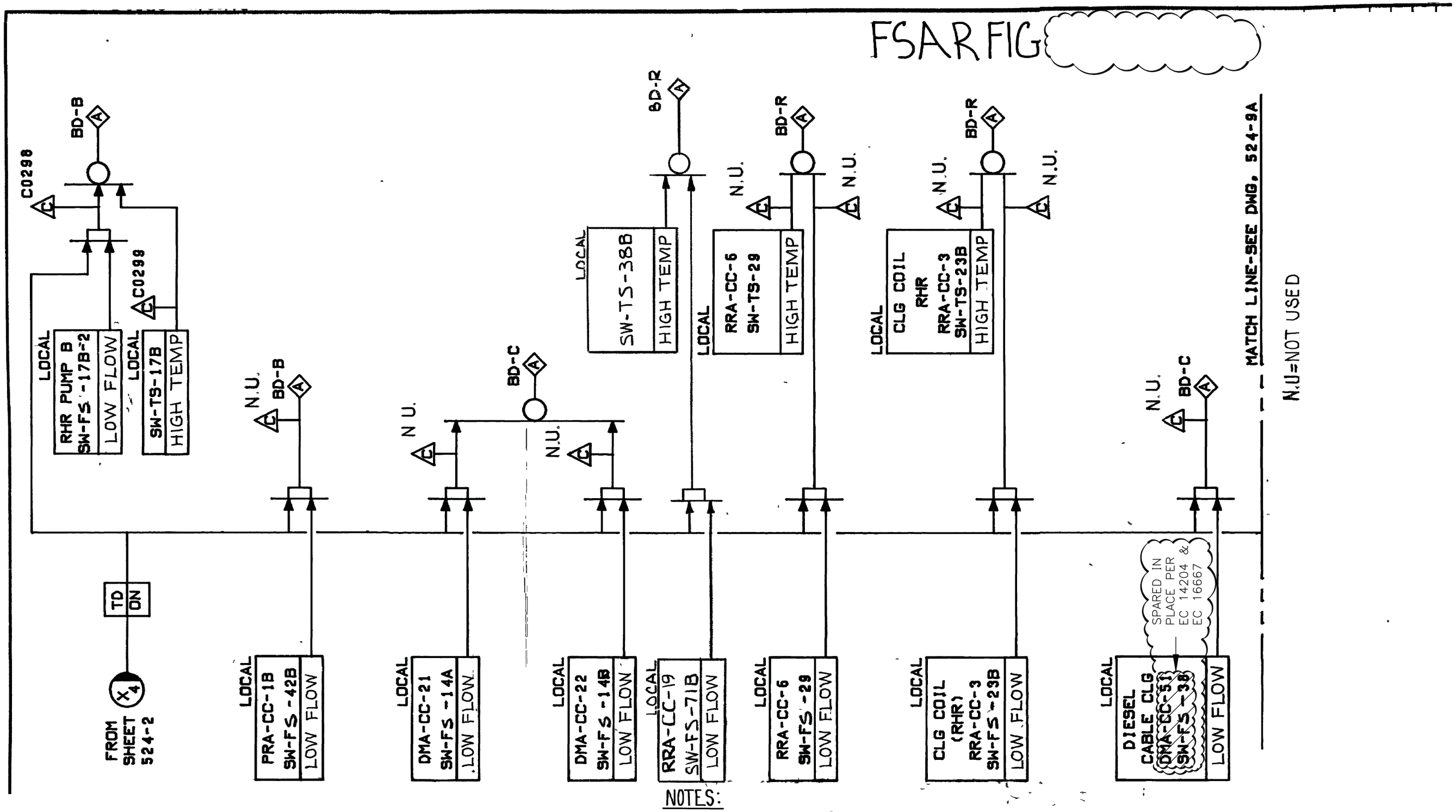

NOTES:

1. TIME DELAY RELAY INFORMATION IS CONTROLLED ON E514-30 AND E514-31
2. REFER TO INSTRUMENT MASTER DATA SHEETS FOR SETPOINT INFORMATION.

Columbia Generating Station Final Safety Analysis Report	Control Logic Diagram - Standby Service Water System		
	Draw. No. M620-524-9	Rev. 15	Figure 7.3-12.13

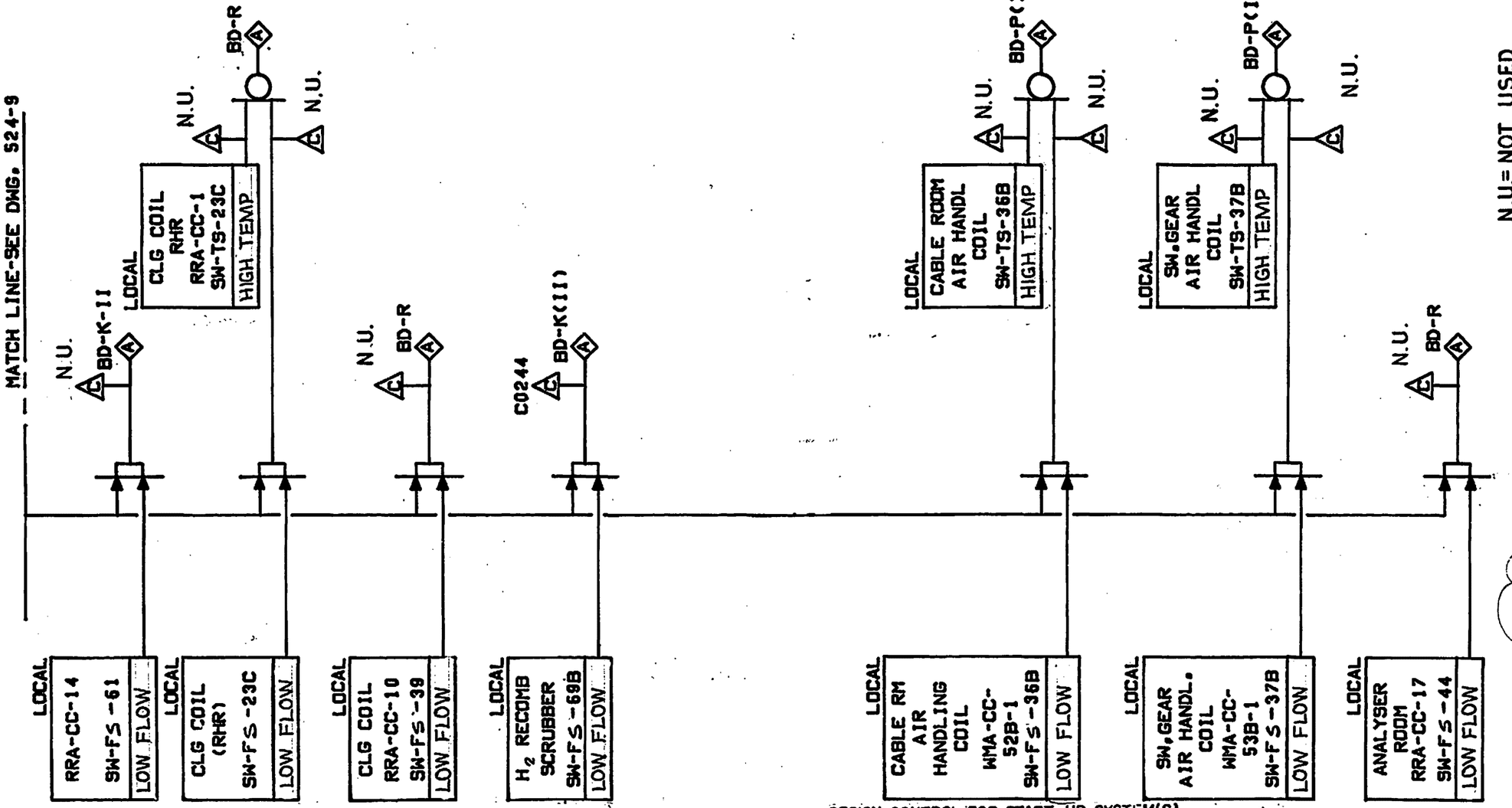

DESIGN CONTROL FOR START-UP SYSTEM(S)
58
TRANSFERRED TO WPPSS. ALL FUTURE CHANGES TO THIS (THESE) SYSTEM(S) SHALL BE INITIATED AND APPROVED BY THE SUPPLY SYSTEM. ALL REVISIONS TO THIS DRAWING REQUIRE APPROVAL OF THE SUPPLY SYSTEM

Columbia Generating Station Final Safety Analysis Report	Control Logic Diagram - Standby Service Water System		
	Draw. No. M620-524-9A	Rev. 9	Figure 7.3-12.14

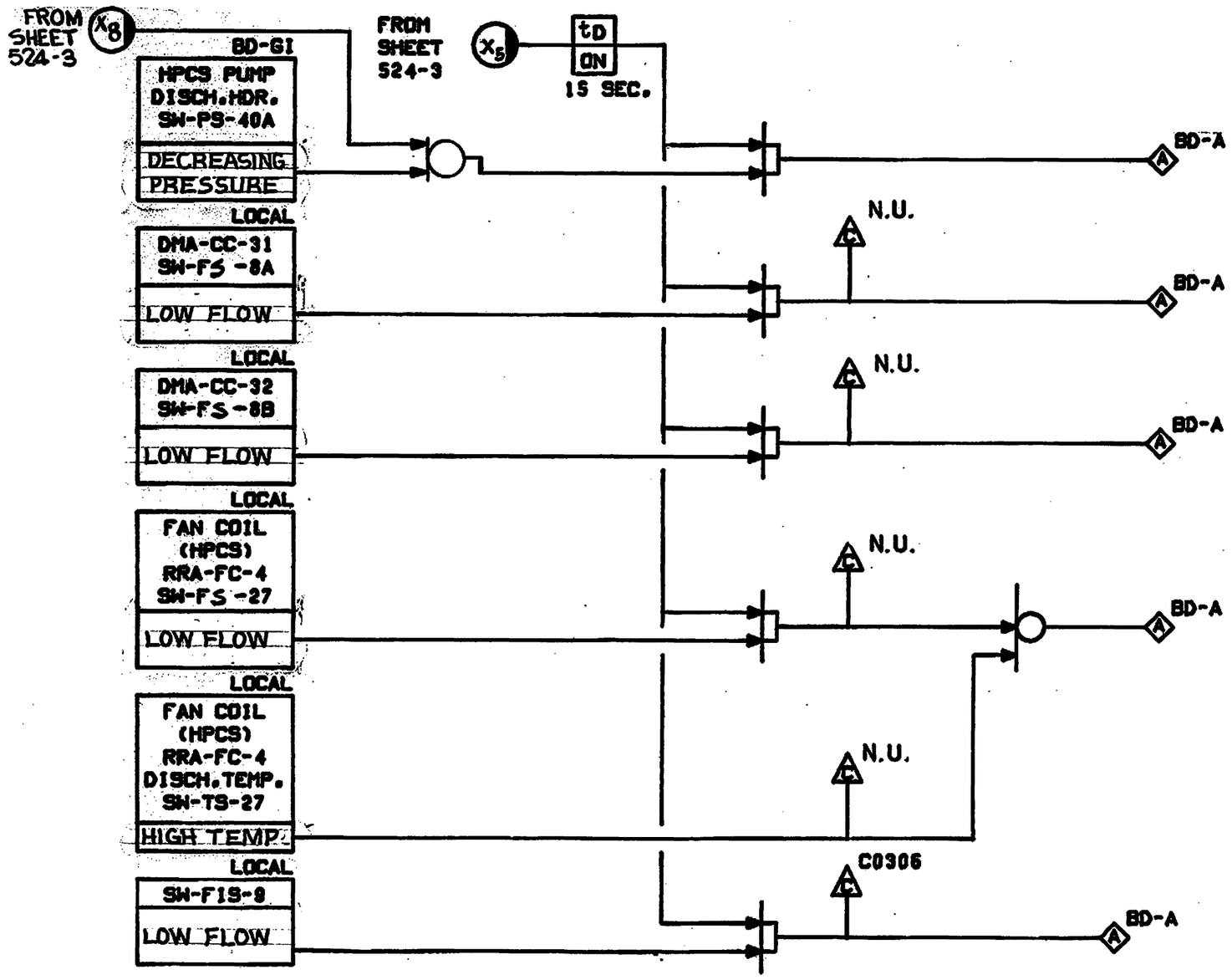

NOTES:

1. TIME DELAY RELAY INFORMATION IS CONTROLLED ON E514-30 AND E514-31.
2. REFER TO INSTRUMENT MASTER DATA SHEETS FOR SETPOINT INFORMATION

REF.DWG.
STANDBY SERVICE WATER FL. D. M-524

N.U.= NOT USED

HPCS SERVICE WATER 'LOW FLOW' ALARM CONTROL LOGIC DIAGRAM

Columbia Generating Station Final Safety Analysis Report	Control Logic Diagram - Standby Service Water System		
	Draw. No. M620-524-10	Rev. 10	Figure 7.3-12.15

TAG NO.	SW. LOCATION	DESCRIPTION	SET POINT	ANN. LOCATION	REMARK
SW-LS-1A1	BD-G1	SPRAY POND "A" HI/LO WTR.LEV.		BD-A	REF. CALC. 5.52.58
SW-TS-1A	BD-G1	SPRAY POND "A" HI/LO WTR.TEMP.		BD-A	REF. CALC. 5.52.58
SW-LS-1C1	BD-G1	SPRAY POND "B" HI/LO WTR.LEV.		BD-A	REF. CALC. 5.52.58
SW-TS-1C	BD-G1	SPRAY POND "B" HI/LO WTR.TEMP.		BD-A	REF. CALC. 5.52.58
SW-LS-1B1	BD-G11	SPRAY POND "B" HI/LO WTR.LEV.		BD-B	REF. CALC. 5.52.58
SW-LS-1D1	BD-G11	SPRAY POND "A" HI/LO WTR.LEV.		BD-B	REF. CALC 5.52.58
SW-TS-1B	BD-G11	SPRAY POND "B" HI/LO WTR. TEMP.		BD-B	REF. CALC. 5.52.58
SW-TS-1D	BD-G11	SPRAY POND "A" HI/LO WTR.TEMP.		BD-B	REF. CALC. 5.52.58

SW.LOCATION
TAG NO.& DESCRIPTION
SET POINT — (A) ANN. LOCATION

DESIGN CONTROL FOR START-UP SYSTEM(S)
58
TRANSFERRED TO WPPSS ALL FUTURE CHANGES TO THIS (THESE) SYSTEM(S) SHALL BE INITIATED AND APPROVED BY THE SUPPLY SYSTEM.ALL REVISIONS TO THIS DRAWING REQUIRE APPROVAL OF THE SUPPLY SYSTEM

ALARM ANNUNCIATOR & COMPUTER INPUT CONTROL LOGIC DIAGRAM

COMP. INPUT PTS FIS		ANN. LOCATION	SIGNAL "A"	FLOW SWITCH NUMBER	SET POINT
C0304		BD-C	DIESEL 1A START	SW-FIS-12	REF CALC. 5.52.58
C0305		BD-C	DIESEL 1B START	SW-FIS-15	REF CALC. 5.52.58

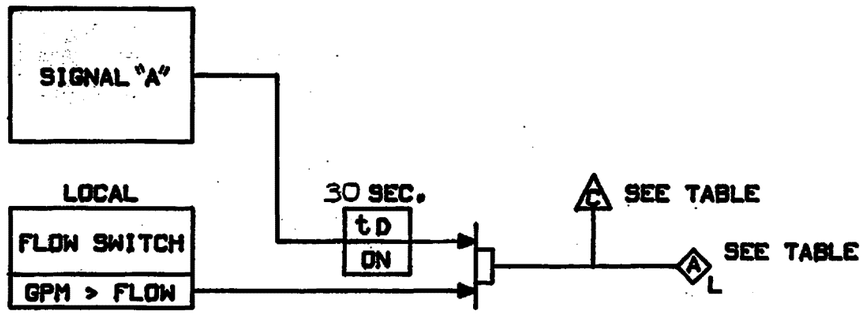

NOTES:
1. TIME DELAY RELAY INFORMATION IS CONTROLLED ON E514-30 AND E514-31.

STANDBY SERVICE WATER "LOW FLOW ALARM"
CONTROL LOGIC DIAGRAM

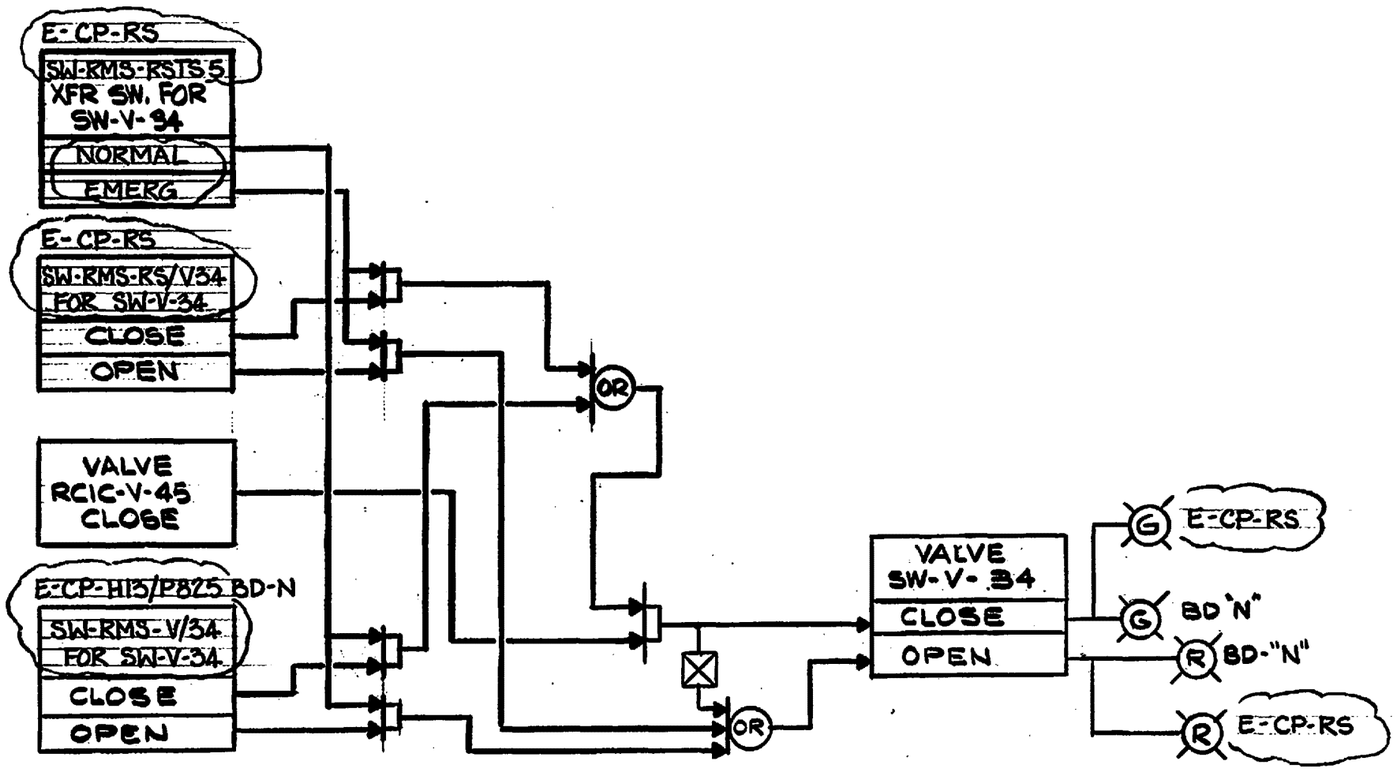

RCIC PUMP ROOM
COOLING WATER
CONTROL LOGIC DIAGRAM

Columbia Generating Station Final Safety Analysis Report	Control Logic Diagram - Standby Service Water System		
	Draw. No. M620-524-13A	Rev. 3	Figure 7.3-12.18

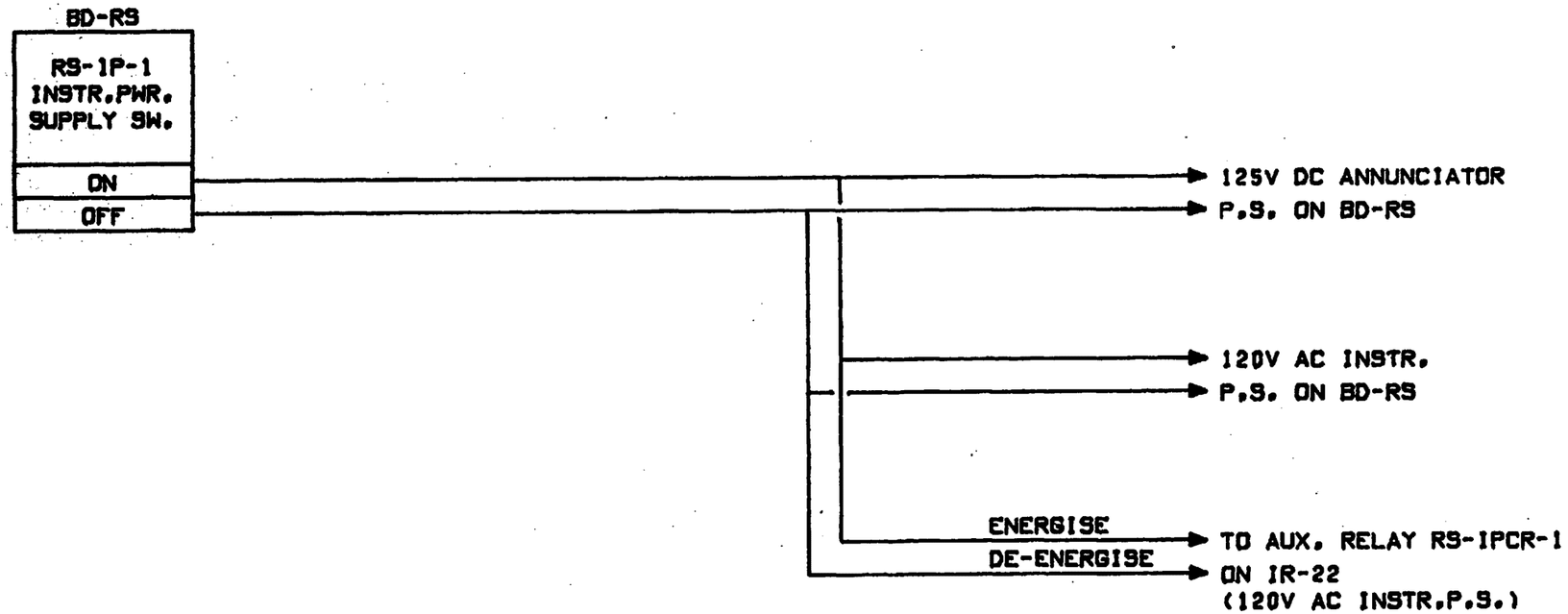

DESIGN CONTROL FOR START-UP SYSTEM(S)
58
TRANSFERRED TO WPPSS. ALL FUTURE CHANGES TO THIS (THESE) SYSTEM(S) SHALL BE INITIATED AND APPROVED BY THE SUPPLY SYSTEM. ALL REVISIONS TO THIS DRAWING REQUIRE APPROVAL OF THE SUPPLY SYSTEM.

POWER SUPPLY LOGIC DIAGRAM

Columbia Generating Station Final Safety Analysis Report	Control Logic Diagram - Standby Service Water System		
	Draw. No. M620-524-14	Rev. 2	Figure 7.3-12.19

NOTE
LOGIC FOR DIVISION II (B SUFFIX) UNITS SIMILAR, EXCEPT AS NOTED.

RE FLOW DIAG. M-548
BISI: BYPASS & INOPERABLE STATUS INDICATION

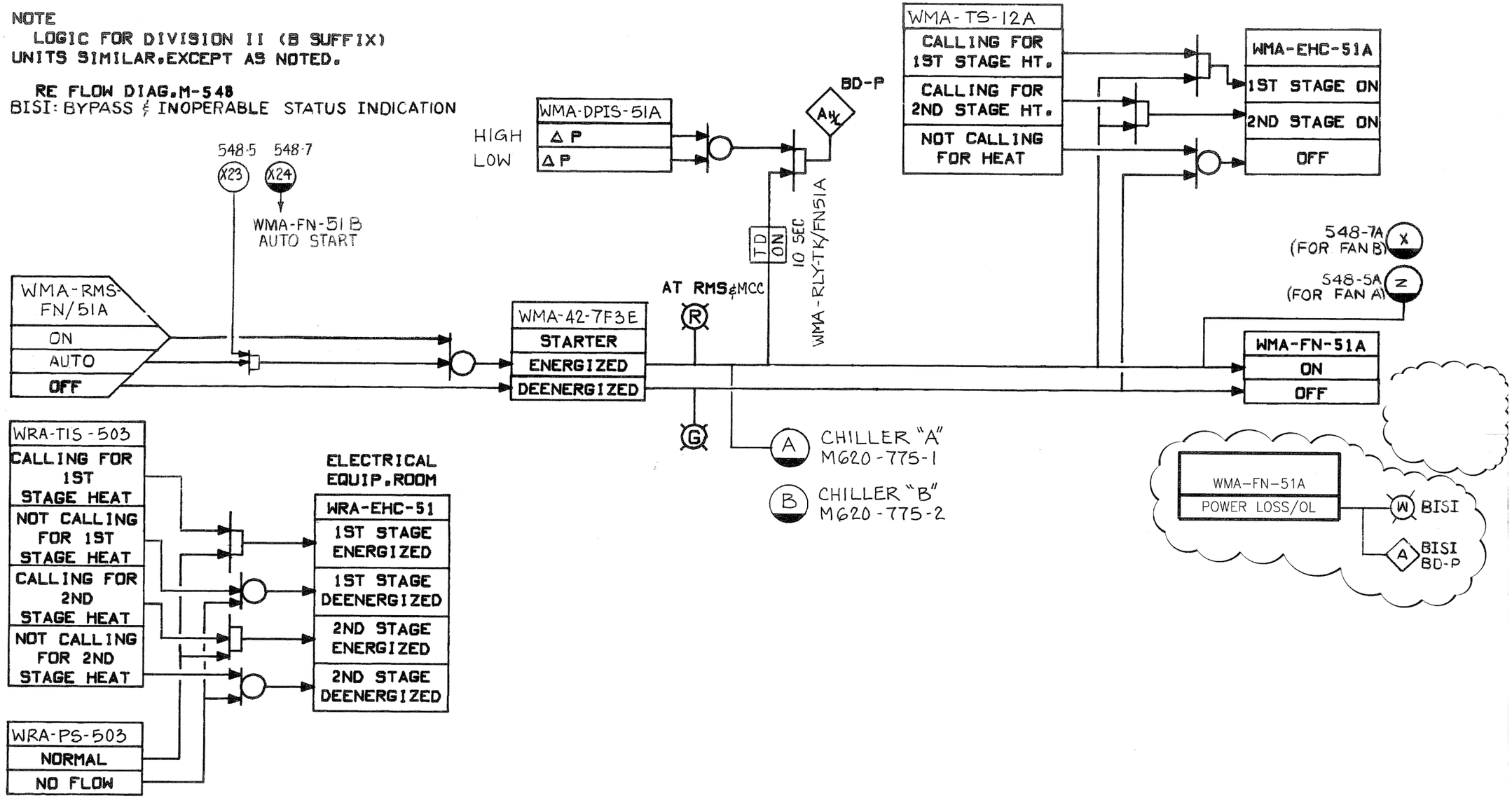

NOTES:

1. TIME DELAY RELAY INFORMATION IS CONTROLLED ON E514-30 AND E514-31.
2. REFER TO INSTRUMENT MASTER DATA SHEETS FOR SETPOINT INFORMATION

Columbia Generating Station Final Safety Analysis Report	Control Logic Diagram - HVAC - Main Control Room and Critical Switchgear		
	Draw. No. M620-548-1	Rev. 14	Figure 07.3-13.1

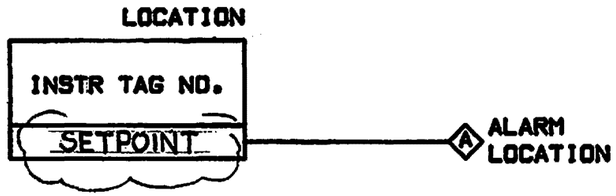

NOTE:
1. REFER TO INSTRUMENT MASTER DATA SHEETS FOR SETPOINT INFORMATION

INSTR. TAG NO.	INSTR. LOCATION	SETPOINT	ALARM LOCATION
WMA-TS-206	LOCAL	INCR TEMP	FIRE PNL
-207		INCR TEMP	
-208		INCR TEMP	
-209		INCR TEMP	
-210		INCR TEMP	
-211		INCR TEMP	
-212		INCR TEMP	
-213		INCR TEMP	
-304A		INCR TEMP	
-215		INCR TEMP	
-216		INCR TEMP	
-224		INCR TEMP	
-503		INCR TEMP	
-510		INCR TEMP	
-304B		INCR TEMP	
WMA-SMD-52A			
WMA-SMD-53A			
WMA-SMD-53B			
WEA-SMD-51			
WEA-SMD-53A			
WEA-SMD-53B			
WMA-SMD-52B			
WEA-dPS-73A		DECR PRESS	BD-P1
WEA-dPS-73B		DECR PRESS	BD-P2

HVAC ALARMS
CONTROL LOGIC DIAGRAM

Columbia Generating Station Final Safety Analysis Report	Control Logic Diagram - HVAC - Main Control Room and Critical Switchgear
	Draw. No. M620-548-2 | Rev. 9 | Figure 7.3-13.2

RE. FLOW DIA. M-548

RMS(LOCAL PANEL)
COHV-2
ON
OFF

WEA-FN-52
ON
OFF
COHV-2 (R) (G)

WEA-AD-52
OPEN
CLOSE
(R) (G)

TO CHILLED WATER VALVE.

TS-52A
CALLING FOR 1ST STAGE HEAT
CALLING FOR 2ND STAGE HEAT
NOT CALLING FOR HEAT

EHC-52A
1ST STAGE ON
2ND STAGE ON
DEENERGIZED

SPV-52A
ENERGIZED
DEENERGIZED

TO ROLL FILTER CIRCUIT
(BY EQUIP. CONTRACTOR)

(R)
(G)

RMS
WMA-FN-52A
ON
OFF

STARTER
ENERGIZED
DEENERGIZED

WMA-FN-52A
ON
OFF

dPIS-52A
INCR Δ P
DECR Δ P

TD ON 10 SEC.

BD-P
$A_{H/L}$

WMA-FN-52A
POWER LOSS/OL
(W) BISI
(A) BISI BD-P

SPRING RET.
RMS
OPEN
AUTO
CLOSE

SMD-52B
NORMAL
TRIPPED

(A) BD-FP

WMA-AD-52-2
OPEN TO CABLE CHASE
CLOSE
(R) (G)

WMA-AD-52-1
OPEN TO SPREAD RM.
CLOSE

NOTES:
1. TIME DELAY RELAY INFORMATION IS CONTROLLED ON E514-30 AND E514-31.
2. REFER TO INSTRUMENT MASTER DATA SHEETS FOR SETPOINT INFORMATION.

Columbia Generating Station Final Safety Analysis Report	Control Logic Diagram - HVAC - Main Control Room and Critical Switchgear		
	Draw. No. M620-548-3	Rev. 13	Figure 07.3-13.3

NOTE:
1. REFER TO INSTRUMENT MASTER DATA SHEETS FOR SETPOINT INFORMATION.

RE. FLOW DIA. M-548

BD-P
WMA-RMS-FN/53A FAN WMA-FN-53A
ON
OFF

E-CP-ARS
E-RMS-ARST-16 XFR SW FOR WMA-FN-53A
NORMAL
EMERG.

E-CP-ARS
WMA-RMS-ARS/FN53A FAN WMA-FN-53A
START
STOP

TO SERVICE WATER VALVE TCV-16B

TS-53A
CALLING FOR 1 ST STAGE HEAT
CALLING FOR 2ND STAGE HEAT
NOT CALLING FOR HEAT

EHC-53A
1ST STAGE ON
2ND STAGE ON
DEENERGIZED

SPV-53A
ENERGIZED
DEENERGIZED

TO ROLL FILTER CIRCUIT
(BY EQUIP. CONTRACTOR)

WMA-FN-53A
RUN
STOP

R MC-7F
G

R BD-P
G

R E-CP-ARS
G

dPIS-53A
INCR Δ P
DECR Δ P

BD-P
$A_{H/L}$

CS-WEA-FN-53A RMS
ON
OFF

STARTER
ENERGIZED
DEENERGIZED

R
G

WEA-FN-53A
ON
OFF

WMA-FN-53A
POWER LOSS/OL

W BISI

A BISI BD-P

FSAR FIG.

Columbia Generating Station Final Safety Analysis Report	Control Logic Diagram - HVAC - Main Control Room and Critical Switchgear		
	Draw. No. M620-548-4	Rev. 6	Figure 07.3-13.4

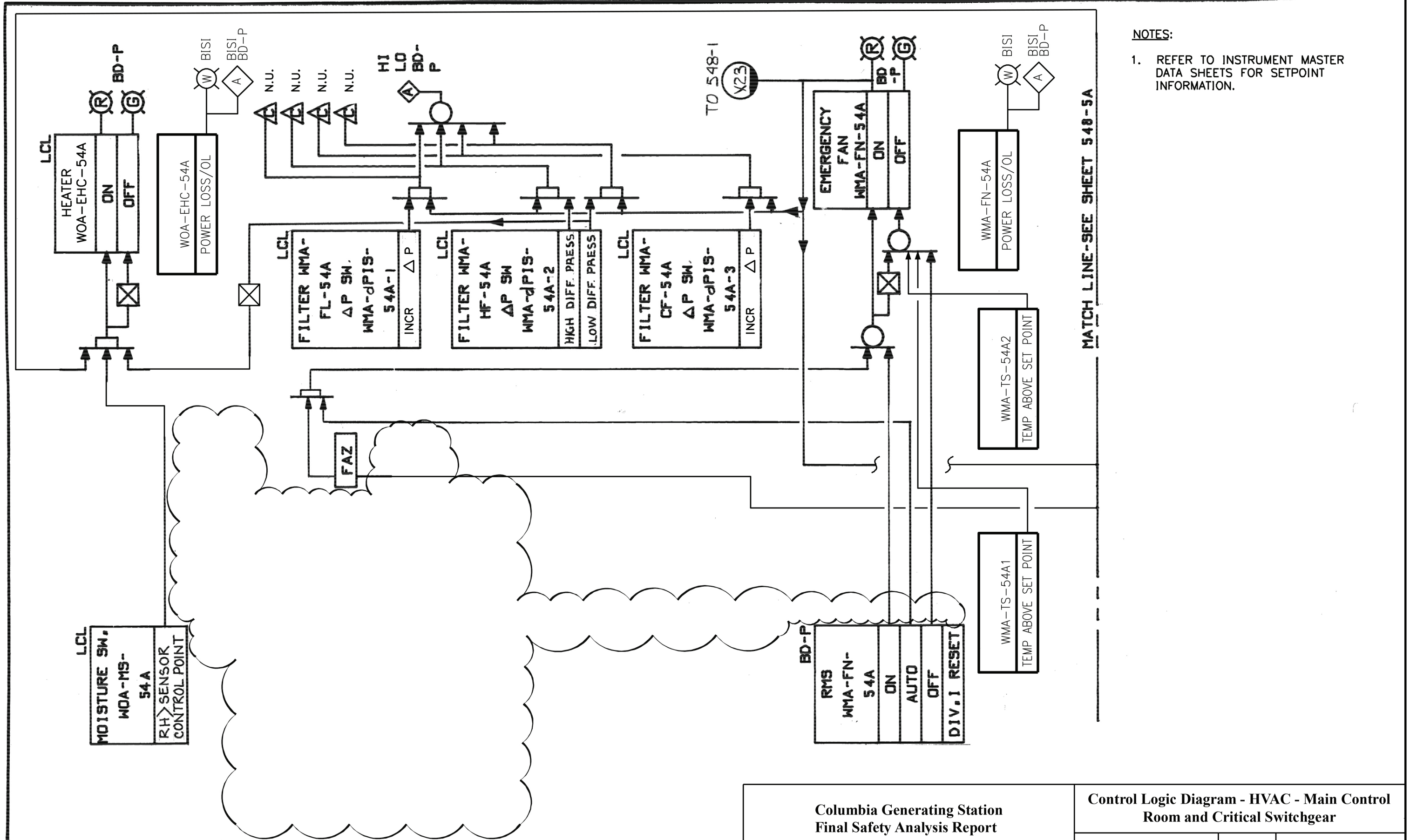

NOTES:

1. REFER TO INSTRUMENT MASTER DATA SHEETS FOR SETPOINT INFORMATION.

Columbia Generating Station **Final Safety Analysis Report**	**Control Logic Diagram - HVAC - Main Control Room and Critical Switchgear**
	Draw. No. M620-548-5 | Rev. 19 | Figure 7.3-13.5

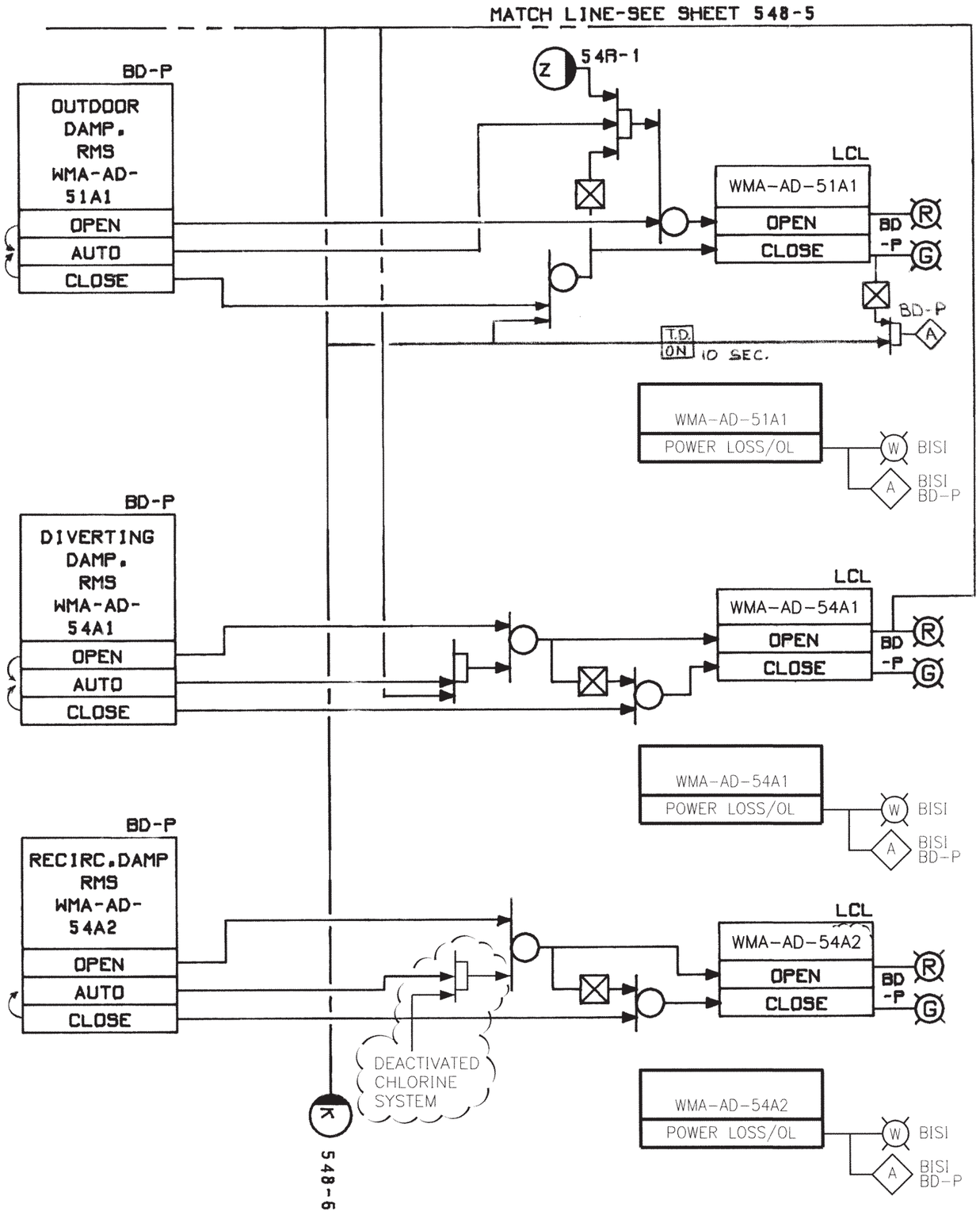

Columbia Generating Station Final Safety Analysis Report	**Control Logic Diagram - HVAC - Main Control Room and Critical Switchgear**		
	Draw. No. M620-548-5A	Rev. 9	Figure 7.3-13.6

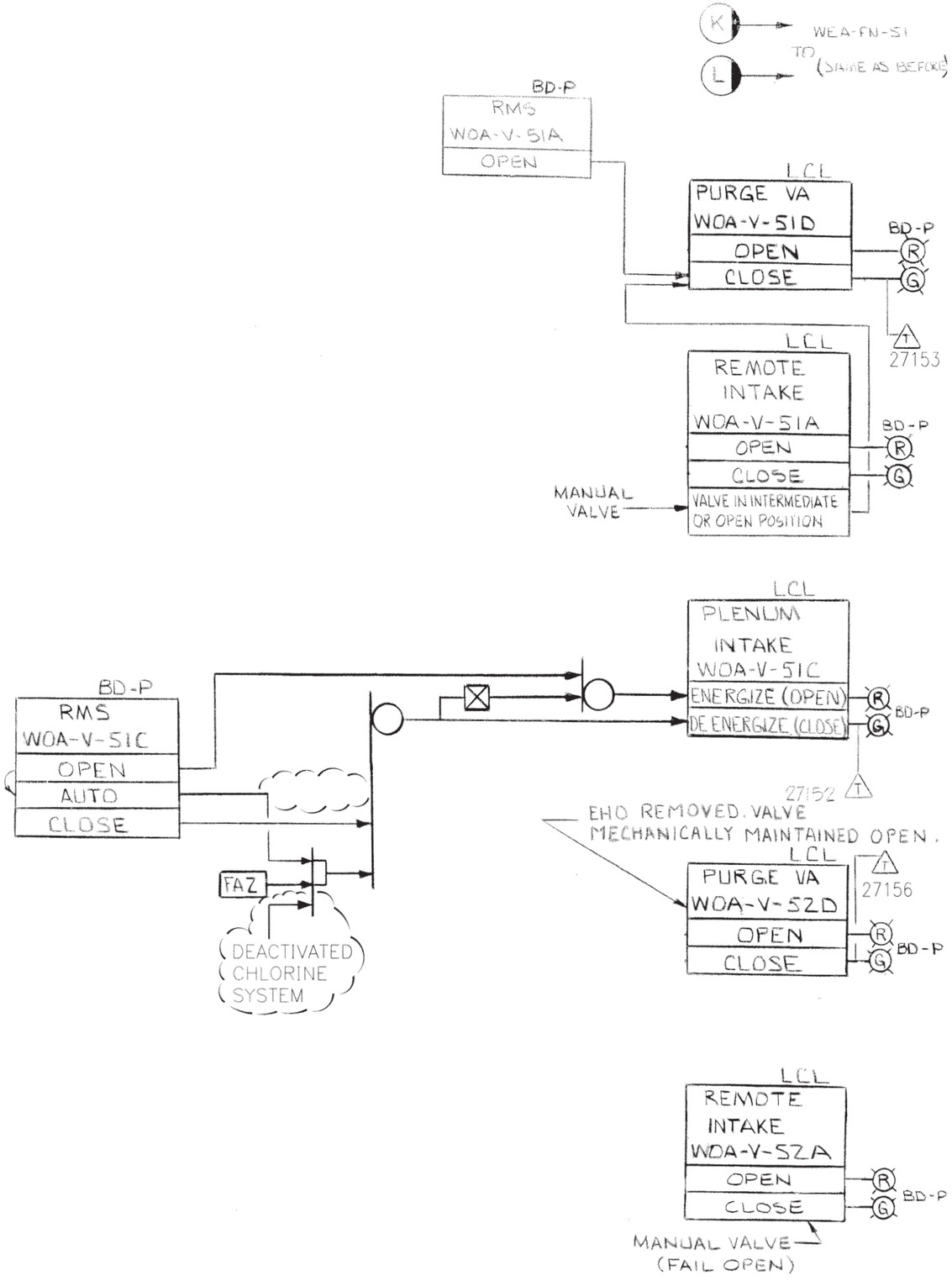

Columbia Generating Station Final Safety Analysis Report	**Control Logic Diagram - HVAC - Main Control Room and Critical Switchgear**		
	Draw. No. M620-548-6	Rev. 10	Figure 7.3-13.7

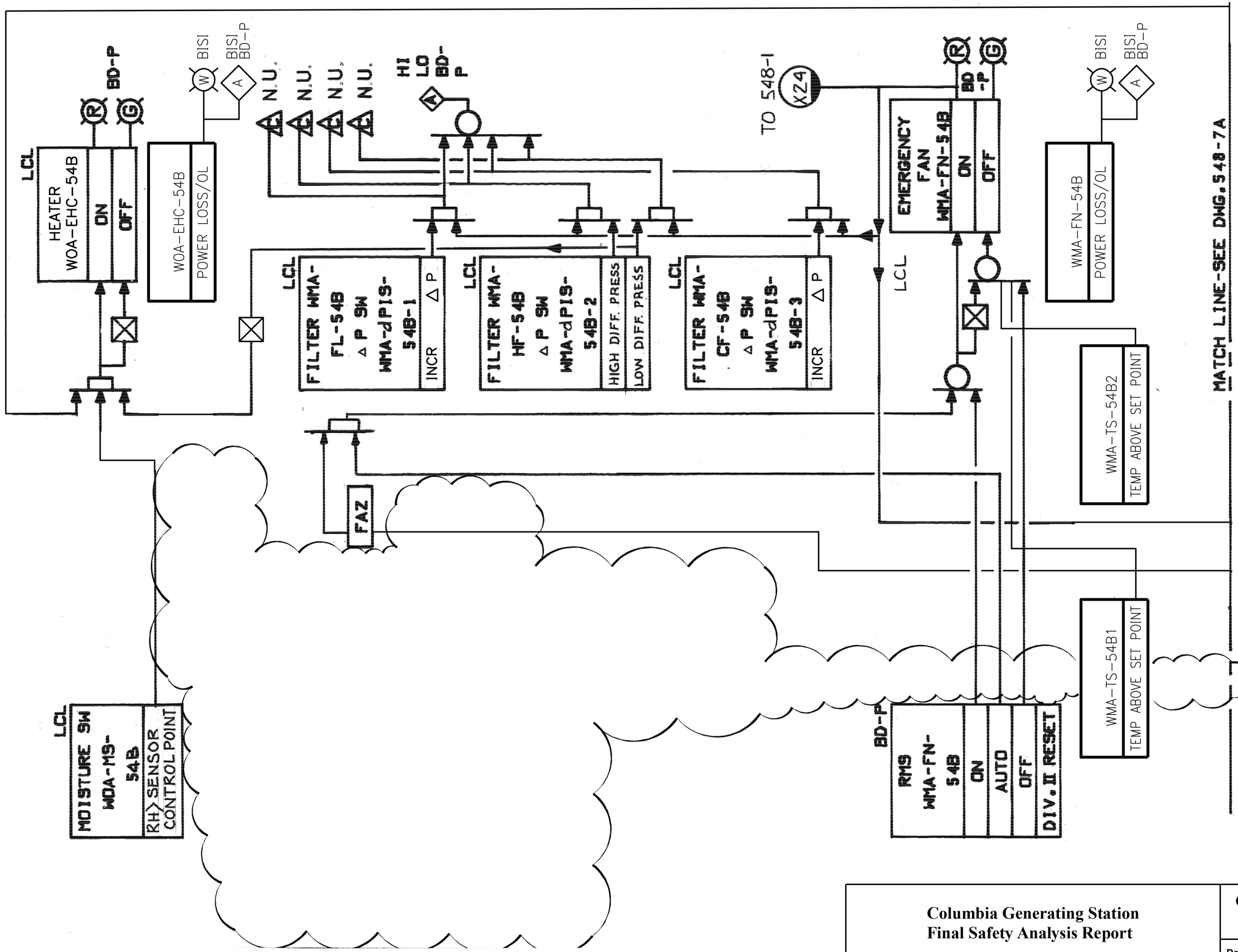

N.U. = NOT USED

NOTES:

1. REFER TO INSTRUMENT MASTER DATA SHEETS FOR SETPOINT INFORMATION.

Columbia Generating Station Final Safety Analysis Report	**Control Logic Diagram - HVAC - Main Control Room and Critical Switchgear**
	Draw. No. M620-548-7 | Rev. 19 | Figure 7.3-13.8

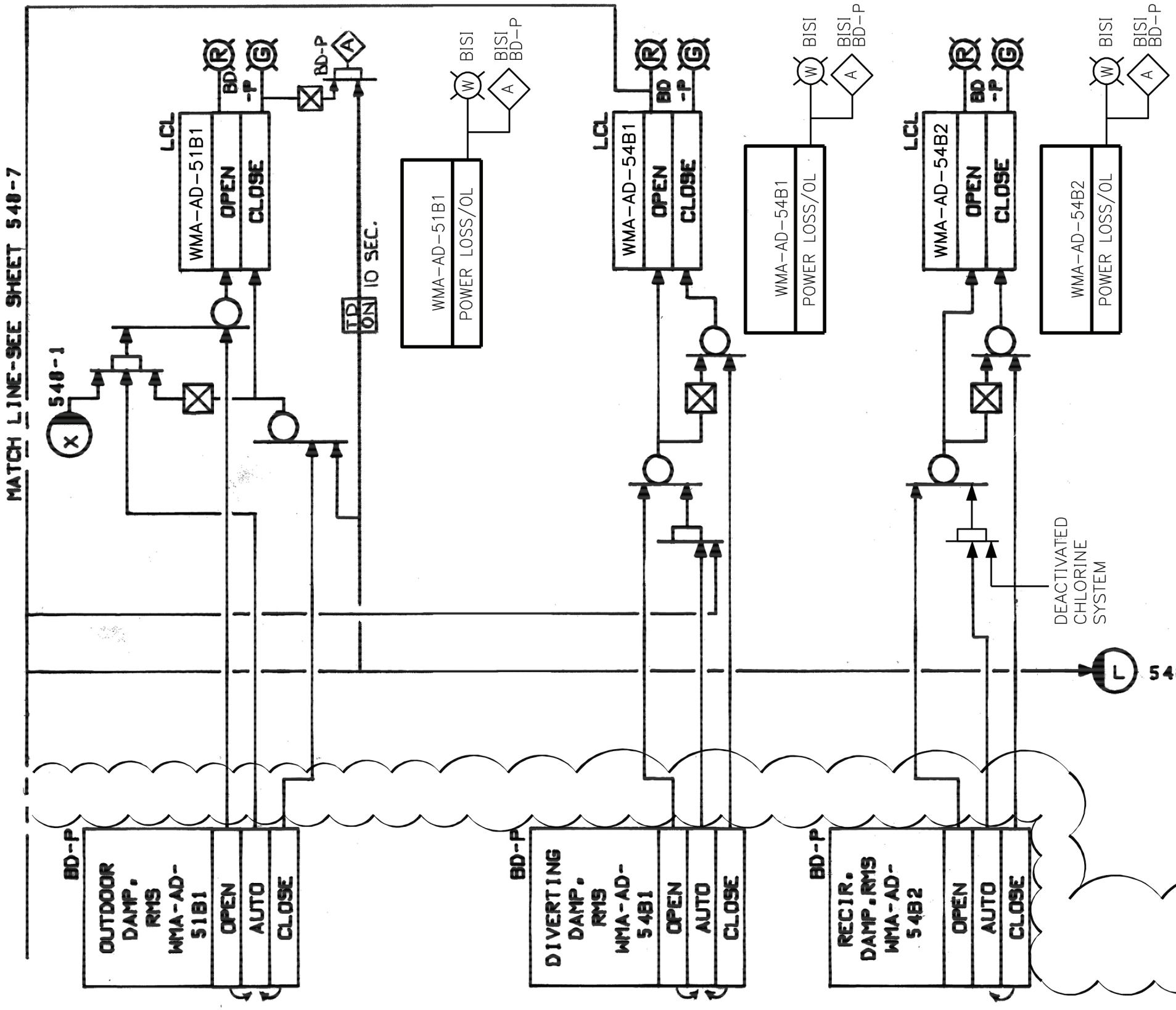

NOTES:

1. TIME DELAY RELAY INFORMATION IS CONTROLLED ON E514-30 & E514-31.

Columbia Generating Station Final Safety Analysis Report	**Control Logic Diagram - HVAC - Main Control Room and Critical Switchgear**
	Draw. No. M620-548-7A | Rev. 10 | Figure 7.3-13.9

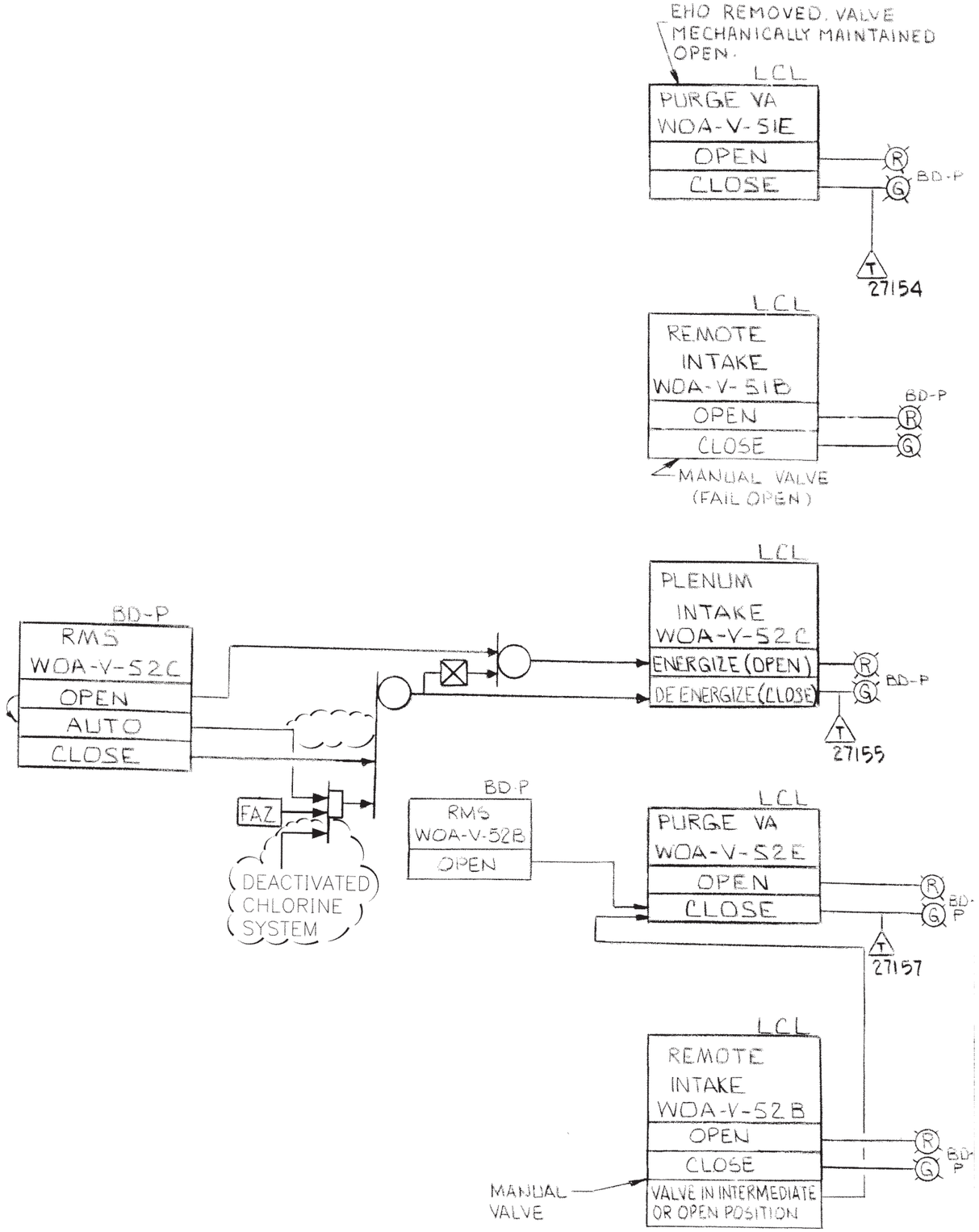

Columbia Generating Station Final Safety Analysis Report	**Control Logic Diagram - HVAC - Main Control Room and Critical Switchgear**		
	Draw. No. M620-548-8	Rev. 10	Figure 7.3-13.10

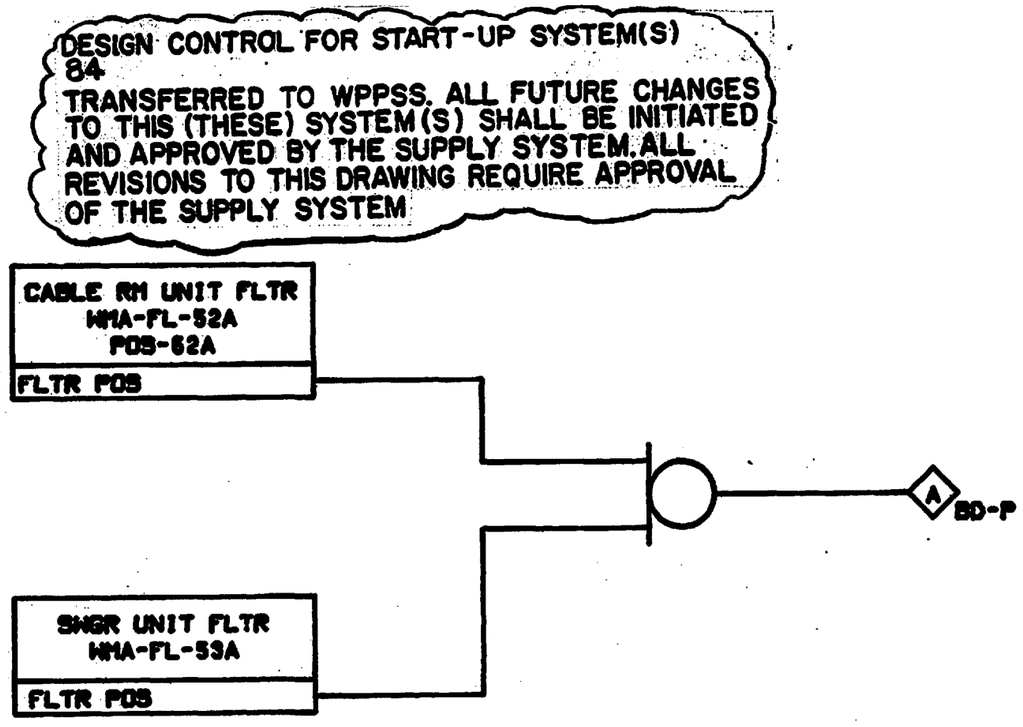

SIMILAR LOGIC FOR DIV-II W/SUFFIX-'B'

Columbia Generating Station Final Safety Analysis Report	Control Logic Diagram - Filter Runout Alarm		
	Draw. No. M620-548-9	Rev. 2	Figure 7.3-13.11

FSAR FIG.

2. REFER TO INSTRUMENT MASTER DATA SHEETS FOR SETPOINT INFORMATION

NOTE:
1. TIME DELAY RELAY INFORMATION IS CONTROLLED ON E514-30 & E514-31

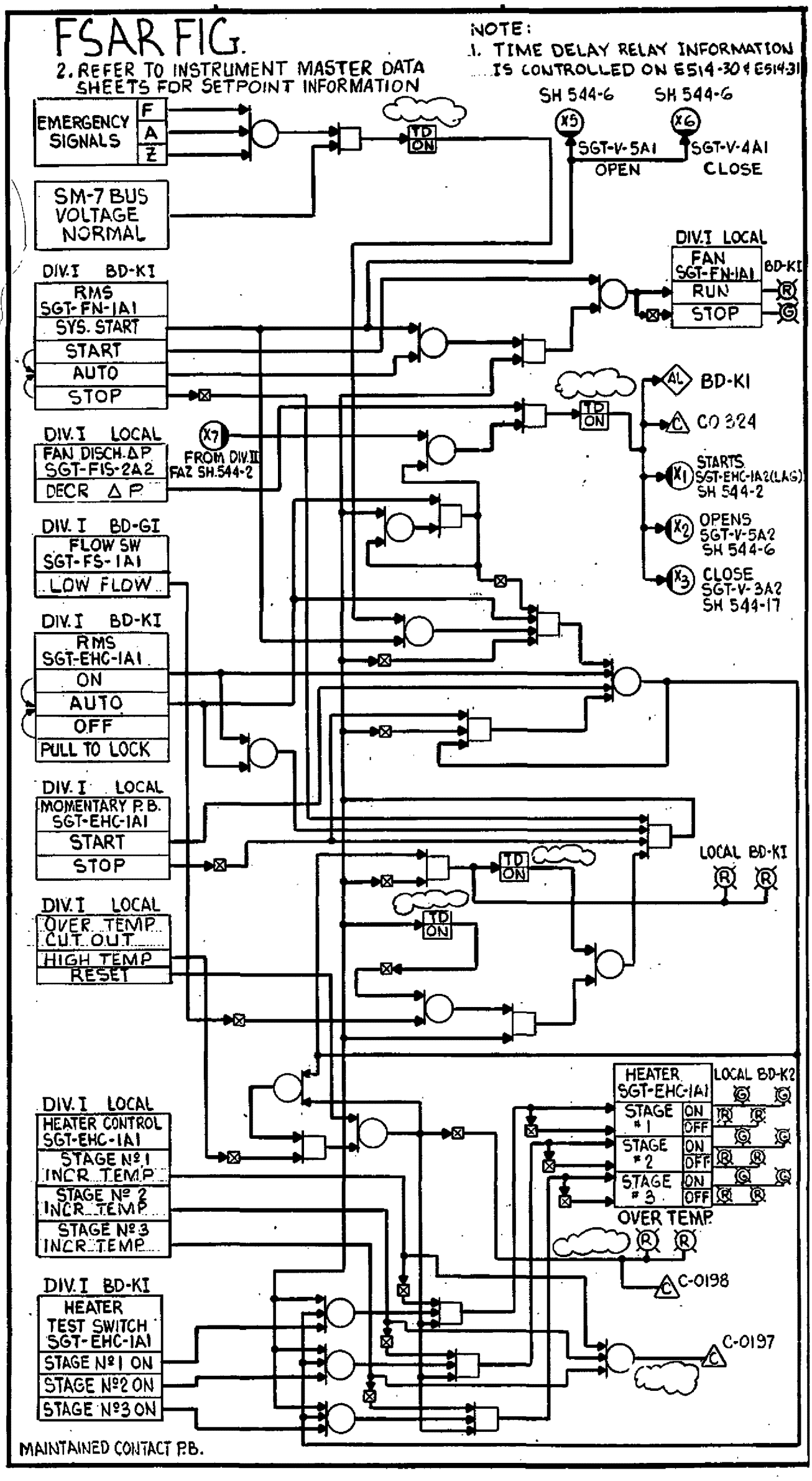

Control Logic Diagram - Standby Gas Treatment System

Draw. No. M620-544-1 | Rev. 10 | Figure 7.3-14.1

Columbia Generating Station
Final Safety Analysis Report

Form No. 960690

NOTE:
1. TIME DELAY RELAY INFORMATION IS CONTROLLED ON ES14-30 & ES14-31.

FSAR FIG.

EMERGENCY SIGNALS F A Z

TD ON DIV II (X7) SH. 544-1

2. REFER TO INSTRUMENT MASTER DATA SHEETS FOR SETPOINT INFORMATION

SM-8 BUS VOLTAGE NORMAL

DIV II LOCAL
FAN SGT-FN-IA2 BD-KI
RUN (R)
STOP (G)

DIV. II BD-KI
RMS SGT-FN-IA2
START
AUTO
STOP

TD ON (AL) BD-KI
(C) C0325

DIV. II BD-G II
FLOW SW SGT-FS-IA2
LOW FLOW

(X1) FROM SH. 544-1

DIV. II BD-KI
RMS SGT-EHC-IA2
ON
AUTO
OFF

DIV. II LOCAL
MOMENTARY P.B. SGT-EHC-IA2
START
STOP

TD ON
LOCAL BD-KI (R) (R)

DIV. II LOCAL
OVER TEMP CUT OUT
HIGH TEMP RESET

TD ON
(XK) THIS SH

HEATER SGT-EHC-IA2 LOCAL BD-KI

STAGE #1	ON	(G) (R)
	OFF	(R) (G)
STAGE #2	ON	(G) (R)
	OFF	(R) (G)
STAGE #3	ON	(G) (R)
	OFF	(R) (G)

DIV. II LOCAL
HEATER CONT. SGT-EHC-IA2
STAGE #1 INCR TEMP
STAGE #2 INCR TEMP
STAGE #3 INCR TEMP

(R) (R) OVER TEMP.
(C) C-0202

DIV. II BD-KI
HEATER TEST SWITCH SGT-EHC-IA2
STAGE #1 ON
STAGE #2 ON
STAGE #3 ON

(C) C-0201

MAINTAINED CONTACT P. B.

Control Logic Diagram - Standby Gas Treatment System

Columbia Generating Station
Final Safety Analysis Report

Draw. No. M620-544-2 | Rev. 10 | Figure 7.3-14.2

NOTE:
1. TIME DELAY RELAY INFORMATION IS CONTROLLED ON E514-30 & E514-31
2. REFER TO INSTRUMENT MASTER DATA SHEETS FOR SETPOINT INFORMATION.

FSAR FIG.

EMERGENCY SIGNALS F A Z

TD ON

SM-8 BUS VOLTAGE NORMAL

SH.544-7 X12 SGT-V-5B2 OPEN

SH.544-7 X13 SGT-V4B2 CLOSE

DIV.II LOCAL
FAN SGT-FN-1B2
RUN
STOP
BD-KII

DIV.II BD-KII
RMS SGT-FN-1B2.
SYS. START
START
AUTO
STOP
X17

AL BD-KII
C 0327

TD ON

STARTS SGT-EHC-1B1 (LAG) SH. 544-4 X8

OPENS SGT-V-5B1 SH. 544-7 X9

CLOSE SGT-V-3B1 SH. 544-17 X10

DIV.I LOCAL
FAN DISCH. ΔP SGT-FIS-2B1
DECR ΔP
X14 FROM DIV.I FAZ SH.544-4

DIV.II BD-GII
FLOW SW SGT-FS-1B2.
LOW FLOW

DIV.II BD-KII
RIAS SGT-EHC-1B2.
ON
AUTO
OFF
PULL TO LOCK

DIV.II LOCAL
MOMENTARY P.B. SGT-EHC-1B2
START
STOP

THIS SH. X17

LOCAL BD-II R R

TD ON

TD ON

DIV.II LOCAL
OVER TEMP CUT OUT
HIGH TEMP
RESET

HEATER SGT-EHC-1B2 — LOCAL BD-KII

STAGE #1	ON	G
	OFF	R
STAGE #2	ON	G
	OFF	R
STAGE #3	ON	G
	OFF	R

OVER TEMP. R R

C C-0204

C C-0203

DIV.II LOCAL
HEATER CONT. SGT-EHC-1B2
STAGE #1 INCR TEMP
STAGE #2 INCR TEMP
STAGE #3 INCR TEMP

DIV.II BD-KII
HEATER TEST SWITCH SGT-EHC-1B2
STAGE #1 ON
STAGE #2 ON
STAGE #3 ON

MAINTAINED CONTACT P.B.

Control Logic Diagram - Standby Gas Treatment System

Draw. No. M620-544-3 | Rev. 11 | Figure 7.3-14.3

NOTE:
1. TIME DELAY RELAY INFORMATION IS CONTROLLED ON E514-30 & E514-31.
2. REFER TO INSTRUMENT MASTER DATA SHEETS FOR SETPOINT INFORMATION.

FSAR FIG.

EMERGENCY SIGNALS F A Z
TD ON
X14 SH. 544-3
SM-7 BUS VOLTAGE NORMAL

DIV. I BD-K II
RMS SGT-FN-1B1
START
AUTO
STOP

DIV. I LOCAL
FAN SGT-FN-1B1 BD-K II
RUN (R)
STOP (G)

AL BD-K II
C C-0326

DIV. I BD-G1
FLOW SW SGT-FS-1B1
LOW FLOW
X8 FROM SH. 544-3

DIV. I BD-K II
RMS SGT-EHC-1B1
ON
AUTO
OFF
X18 THIS SH

DIV. I LOCAL
MOMENTARY RB SGT-EHC-1B1
START
STOP
TD ON
LOCAL BD-K II (R) (R)

DIV. I LOCAL
OVER TEMP CUT OUT
HIGH TEMP
RESET
TD ON
X18

HEATER SGT-EHC-1B1 LOCAL BD-K II

STAGE #1	ON	(G) (R)
	OFF	(R) (G)
STAGE #2	ON	(G) (R)
	OFF	(R) (G)
STAGE #3	ON	(G) (R)
	OFF	(R) (G)

DIV. I LOCAL
HEATER CONT. SGT-EHC-1B1
STAGE #1 INCR TEMP
STAGE #2 INCR TEMP
STAGE #3 INCR TEMP

(R) (R) OVER TEMP.
C C-0200
C C-0199

DIV. I BD-K II
HEATER TEST SWITCH SGT-EHC-1B1
STAGE #1 ON
STAGE #2 ON
STAGE #3 ON

MAINTAINED CONTACT P. B.

Control Logic Diagram - Standby Gas Treatment System

Columbia Generating Station
Final Safety Analysis Report

Draw. No. M620-544-4 | Rev. 10 | Figure 7.3-14.4

Form No. 960690

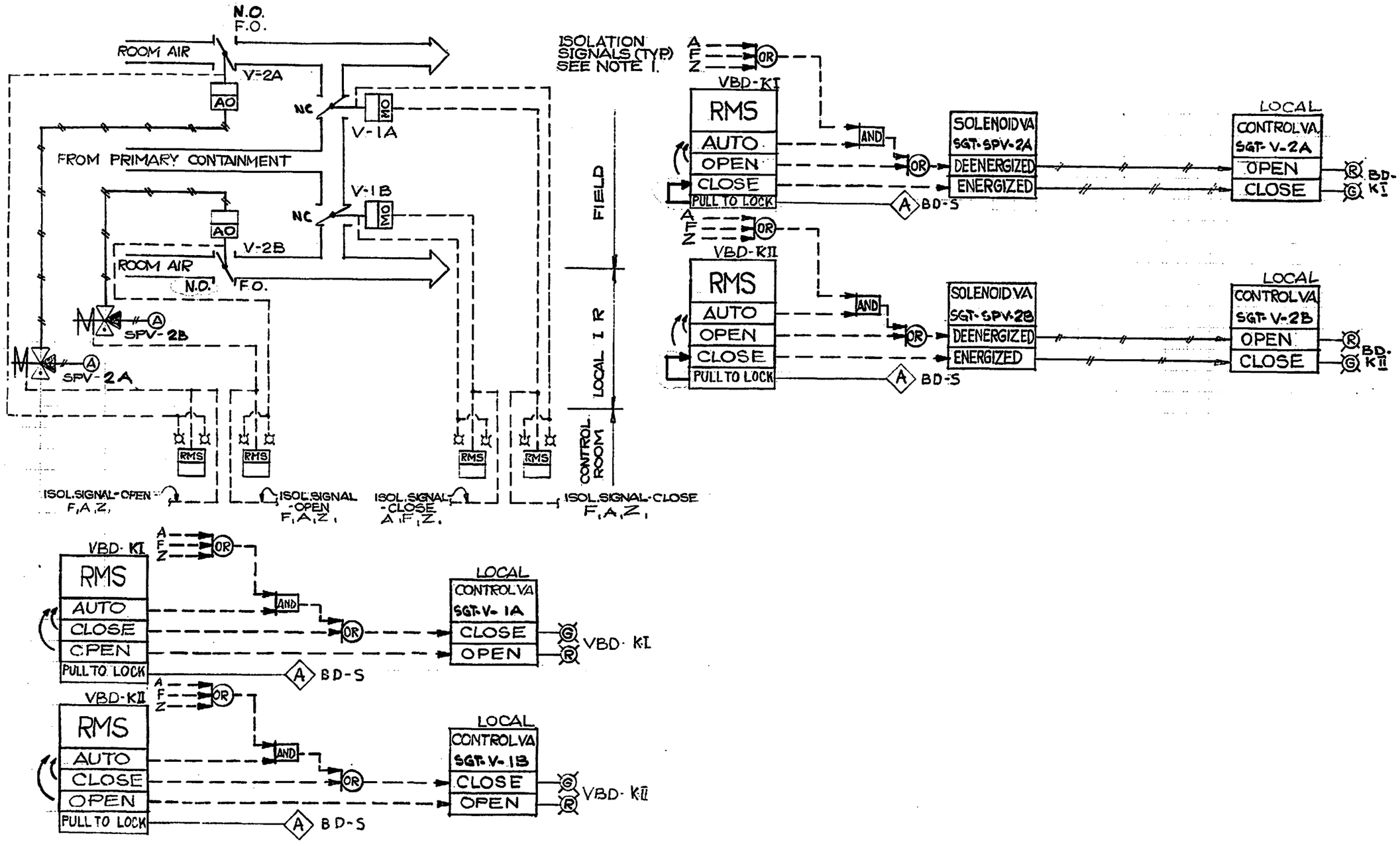

Columbia Generating Station Final Safety Analysis Report	Control Logic Diagram - Standby Gas Treatment System		
	Draw. No. M620-544-5	Rev. 3	Figure 7.3-14.5

Form No. 960690

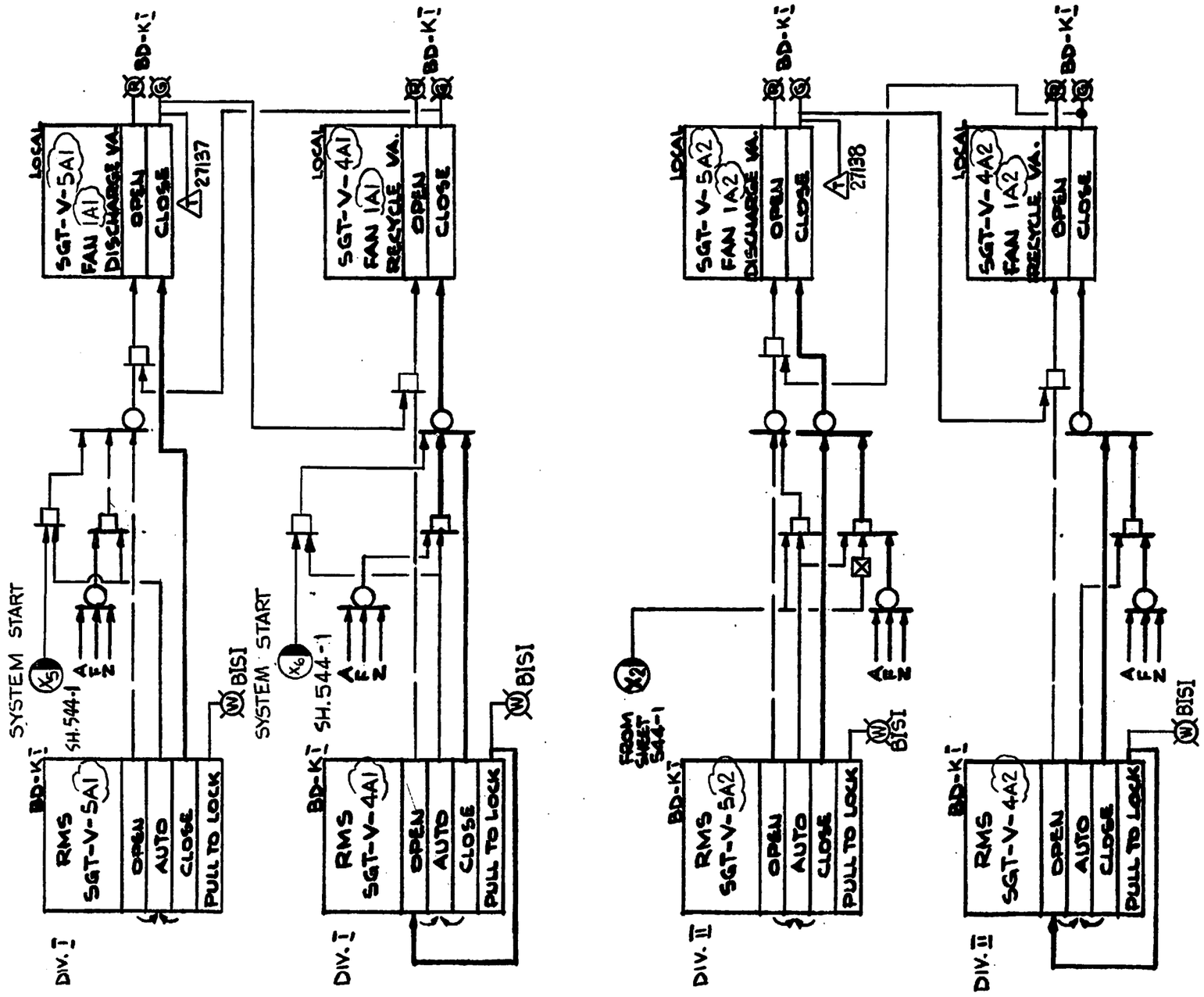

Columbia Generating Station Final Safety Analysis Report	Control Logic Diagram - Standby Gas Treatment System		
	Draw. No. M620-544-6	Rev. 5	Figure 7.3-14.6

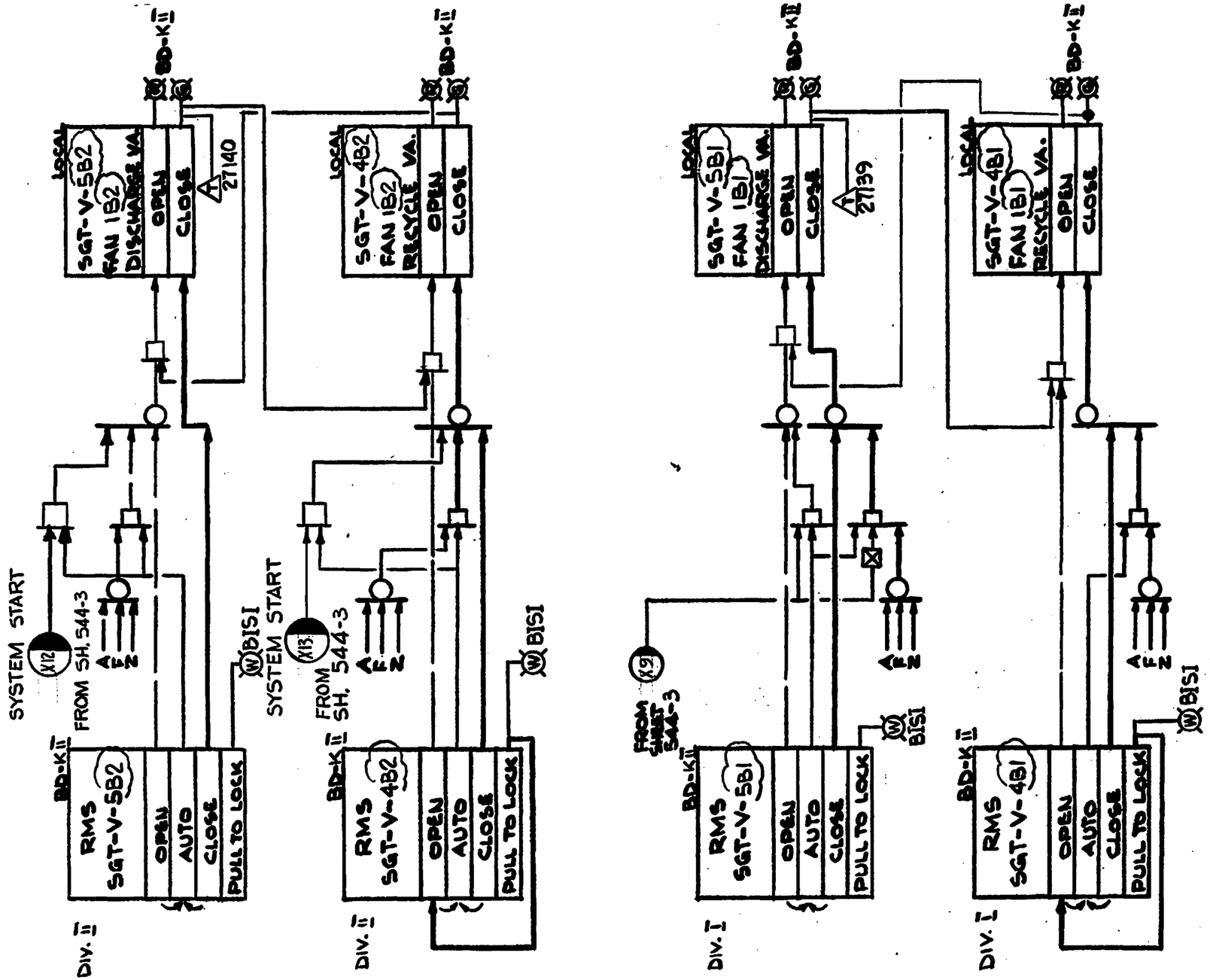

Columbia Generating Station Final Safety Analysis Report	Control Logic Diagram - Standby Gas Treatment System	
	Draw. No. M620-544-7	Rev. 5 / Figure 7.3-14.7

NOTE:
1. REFER TO INSTRUMENT MASTER DATA SHEETS FOR SETPOINT INFORMATION.

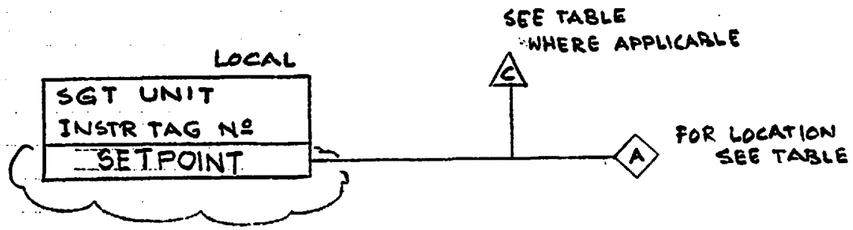

INSTR. TAG Nº	ANNUN LOCATION	COMP. INP POINT
SGT-dPIS-1A	BD-KI	C0211
-2A		C0212
-3A		C0214
-4A		C0218
-5A		C0220
-6A		C0222
-1B	BD-KII	C0210
-2B		C0213
-3B		C0215
-4B		C0219
-5B		C0221
-6B		C0223
SGT-TS-1A	BD-KI	—
-1B	BD-KII	—
SGT-MS-4A	BD-KI	—
SGT-MS-4B	BD-KII	—
TS-6A	BD-KI	—
TS-6B	BD-KII	—
TS-7A	BD-KI	—
TS-7B	BD-KII	—

Columbia Generating Station Final Safety Analysis Report	Control Logic Diagram - Standby Gas Treatment System
	Draw. No. M620-544-8 | Rev. 4 | Figure 7.3-14.8

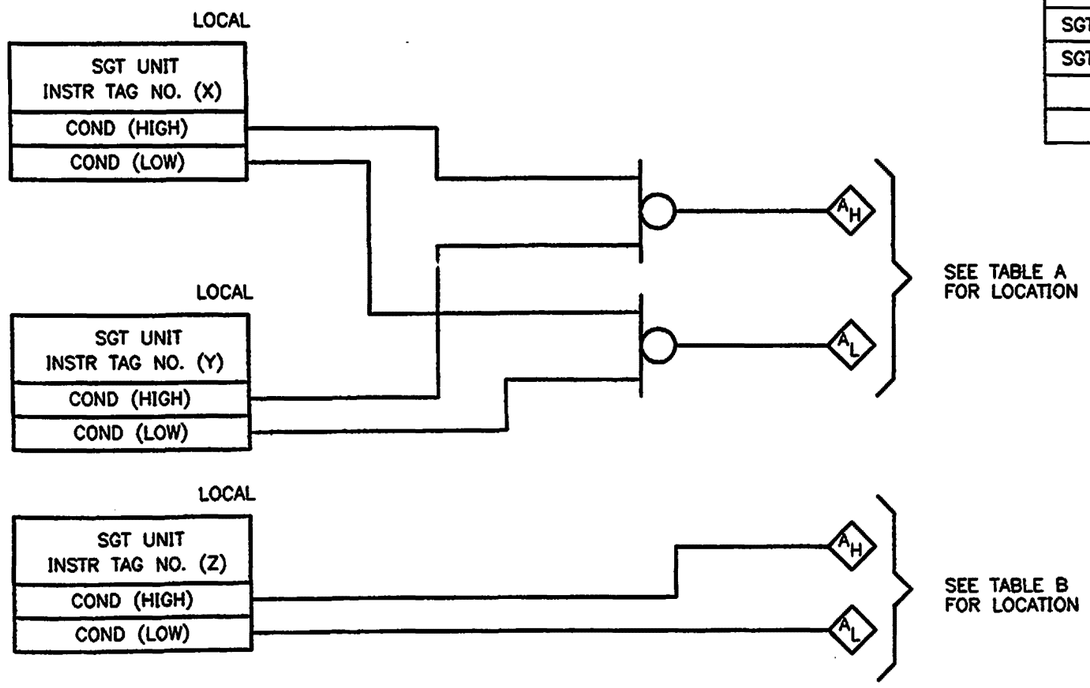

TABLE A

INSTR TAG NO. (X)	INSTR TAG NO. (Y)	CONDITION (HIGH)	CONDITION (LOW)	ANNUNCIATOR LOCATION	EWD
SGT-TS-1A3/4	SGT-TS-2A1/2	INCREASING TEMP.	DECREASING TEMP.	BD-KI	EWD-39E-004
SGT-TS-1B3/4	SGT-TS-2B1/2	INCREASING TEMP.	DECREASING TEMP.	BD-KII	EWD-39E-005

TABLE B

INSTR TAG NO. (Z)	CONDITION (HIGH)	CONDITION (LOW)	ANNUNCIATOR LOCATION	EWD
SGT-TS-1A1/2	INCREASING TEMP.	DECREASING TEMP.	BD-KI	EWD-39E-004
SGT-TS-1B1/2	INCREASING TEMP.	DECREASING TEMP.	BD-KII	EWD-39E-005
SGT-TS-2A3/4	INCREASING TEMP.	DECREASING TEMP.	BD-KI	EWD-39E-006
SGT-TS-2B3/4	INCREASING TEMP.	DECREASING TEMP.	BD-KII	EWD-39E-007

NOTES:

1. REFER TO INSTRUMENT MASTER DATA SHEETS FOR SETPOINT INFORMATION.

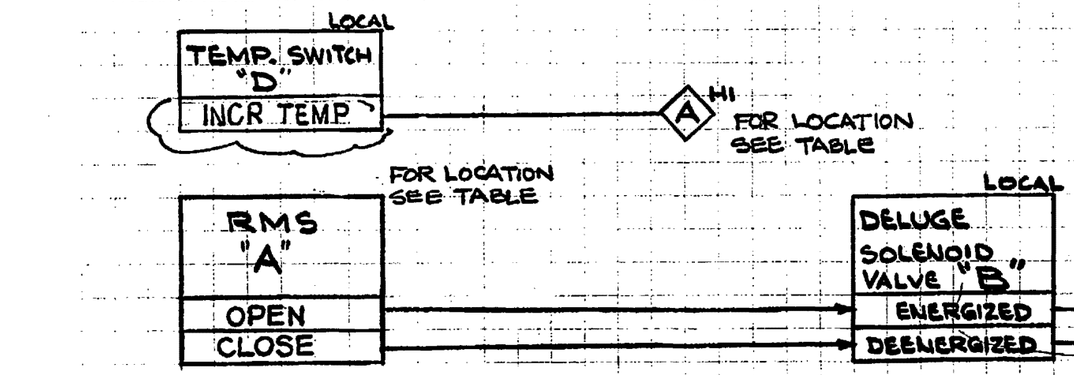

TEMP. SWITCH "D"	RMS "A"	BD-	DELUGE SOL. VA. "B"	ELECT. DIV.	DELUGE VALVE "C"
SGT-TS-8A1	FP-RMS-SGT/16	K I	FP-SPV-SGT/16	A	FP-V-SGT/16
SGT-TS-6A1	/26	K I	/26	A	/26
SGT-TS-7A1	/36	K I	/36	A	/36
SGT-TS-8B1	/46	K II	/46	B	/46
SGT-TS-6B1	/56	K II	/56	B	/56
SGT-TS-7B1	/66	K II	/66	B	/66

NOTE:
1. REFER TO INSTRUMENT MASTER DATA SHEETS FOR SETPOINT INFORMATION

Columbia Generating Station
Final Safety Analysis Report

Control Logic Diagram - Standby Gas Treatment System

Draw. No. M620-544-12 | Rev. 5 | Figure 7.3-14.10

NOTE "D"

WHEN A NITROGEN BOTTLE EMPTIES ITS CONTENTS, THE DECREASE IN PRESSURE ACTUATES THE PROGRAMMER STEPPING MOTOR VIA PRESSURE SWITCHES THUS CAUSING THE PROGRAMMER TO SEQUENCE TO THE NEXT STEP. THE PROGRAMMER OUTPUT WILL DE-ENERGIZE (OPEN-SOLENOID VALVE) AT THIS NEW STEP AND WILL HOLD ALL PRECEDING STEP OUTPUTS DE-ENERGIZED (SOLENOID VALVES - OPEN) UNTIL THE PROGRAMMER IS RESET BACK TO STEP-0. ALL STEPS WHICH HAVE NOT BEEN SEQUENCED WILL REMAIN ENERGIZED (SOLENOID VALVES - CLOSED)

"E" TIME DELAY RELAY INFORMATION IS CONTROLLED ON E514-30 & E514-31.

"F" REFER TO INSTRUMENT MASTER DATA SHEETS FOR SETPOINT INFORMATION.

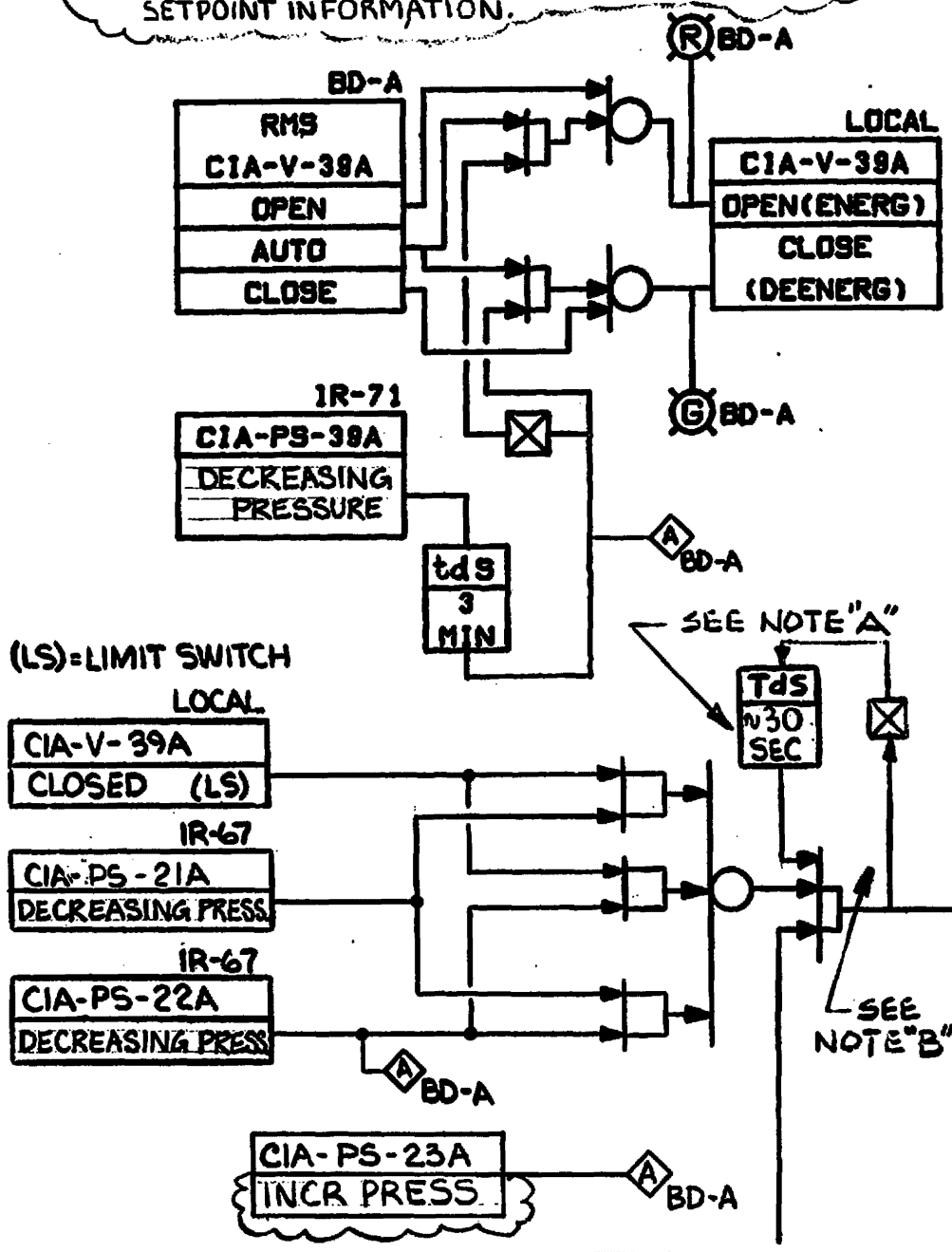

NOTE "B"

ONCE THE STEP SIGNAL IS APPLIED, THE PROGRAMMER SEALS IN AND ADVANCES TO THE NEXT STEP BEFORE THE LOSS OF ~30 SECONDS TIME DELAY SIGNAL INTERRUPTS THE STEP SIGNAL.

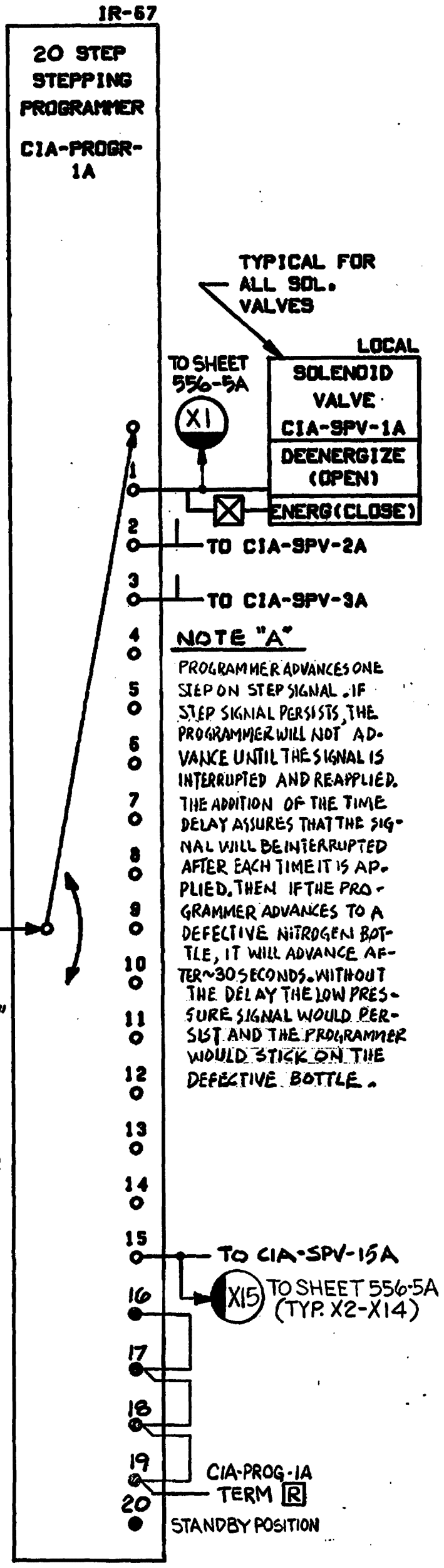

NOTE "A"

PROGRAMMER ADVANCES ONE STEP ON STEP SIGNAL. IF STEP SIGNAL PERSISTS, THE PROGRAMMER WILL NOT ADVANCE UNTIL THE SIGNAL IS INTERRUPTED AND REAPPLIED. THE ADDITION OF THE TIME DELAY ASSURES THAT THE SIGNAL WILL BE INTERRUPTED AFTER EACH TIME IT IS APPLIED. THEN IF THE PROGRAMMER ADVANCES TO A DEFECTIVE NITROGEN BOTTLE, IT WILL ADVANCE AFTER ~30 SECONDS. WITHOUT THE DELAY THE LOW PRESSURE SIGNAL WOULD PERSIST AND THE PROGRAMMER WOULD STICK ON THE DEFECTIVE BOTTLE.

NOTE "C"

AFTER EACH USE OF PROGRAMMER AND BOTTLES, RESET PROGRAMMER TO ZERO, AND PRESS RESET BUTTON AT REMOTE N_2 BOTTLE STATION #1A.

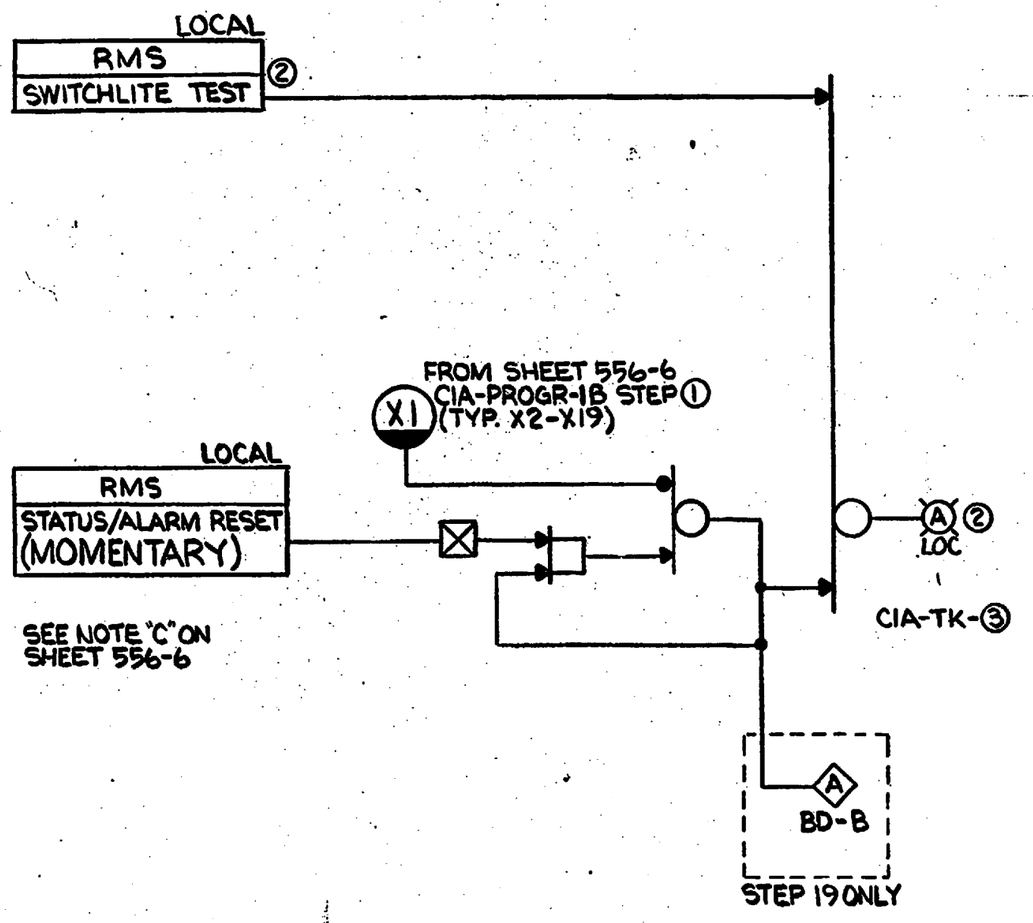

① CIA-PROGR-1B STEP	② LATCHING SWITCH LIGHT NO.	③ NITROGEN BOTTLE NO. CIA-TK-
0	NONE	NONE
1	1	1B
2	2	2B
3	3	3B
4	4	4B
5	5	5B
6	6	6B
7	7	7B
8	8	8B
9	9	9B
10	10	10B
11	11	11B
12	12	12B
13	13	13B
14	14	14B
15	15	15B
16	16	16B
17	17	17B
18	18	18B
19	19	19B

DESIGN CONTROL FOR START-UP SYSTEM(S) 24 TRANSFERRED TO WPPSS. ALL FUTURE CHANGES TO THIS (THESE) SYSTEM(S) SHALL BE INITIATED AND APPROVED BY THE SUPPLY SYSTEM. ALL REVISIONS TO THIS DRAWING REQUIRE APPROVAL OF THE SUPPLY SYSTEM.

NOTE "D"

WHEN A NITROGEN BOTTLE EMPTIES ITS CONTENTS, THE DECREASE IN PRESSURE ACTUATES THE PROGRAMMER STEPPING MOTOR VIA PRESSURE SWITCHES, THUS CAUSING THE PROGRAMMER TO SEQUENCE TO THE NEXT STEP. THE PROGRAMMER OUTPUT WILL DE-ENERGIZE (OPEN-SOLENOID VALVE) AT THIS NEW STEP AND WILL HOLD ALL PRECEDING STEP OUTPUTS DE-ENERGIZED (SOLENOID VALVE-OPEN) UNTIL THE PROGRAMMER IS RESET BACK TO STEP "0". ALL STEPS WHICH HAVE NOT BEEN SEQUENCED WILL REMAIN ENERGIZED (SOLENOID VALVE - CLOSED).

"E" TIME DELAY RELAY INFORMATION IS CONTROLLED ON E514-30 & E514-31.

"F" REFER TO INSTRUMENT MASTER DATA SHEETS FOR SETPOINT INFORMATION.

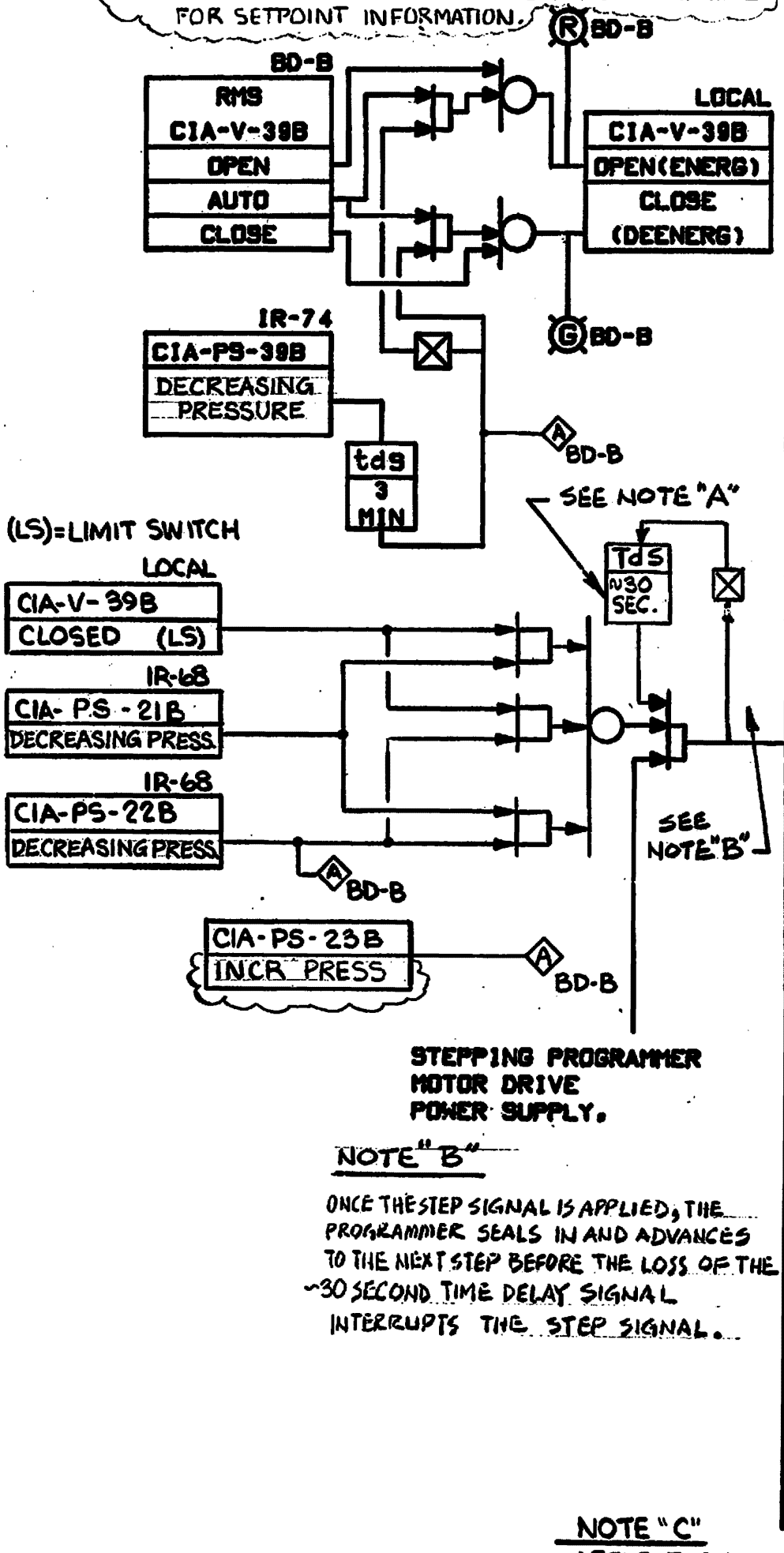

NOTE "A"

PROGRAMMER ADVANCES ONE STEP ON STEP SIGNAL. IF STEP SIGNAL PERSISTS, THE PROGRAMMER WILL NOT ADVANCE UNTIL THE SIGNAL IS INTERRUPTED AND RE-APPLIED. THE ADDITION OF THE TIME DELAY ASSURES THAT THE SIGNAL WILL BE INTERRUPTED AFTER EACH TIME IT IS APPLIED. THEN IF THE PROGRAMMER ADVANCES TO A DEFECTIVE NITROGEN BOTTLE, IT WILL ADVANCE AFTER ~30 SECONDS. WITHOUT THE DELAY THE LOW PRESSURE SIGNAL WOULD PERSIST AND THE PROGRAMMER WOULD STICK ON THE DEFECTIVE BOTTLE.

NOTE "B"

ONCE THE STEP SIGNAL IS APPLIED, THE PROGRAMMER SEALS IN AND ADVANCES TO THE NEXT STEP BEFORE THE LOSS OF THE ~30 SECOND TIME DELAY SIGNAL INTERRUPTS THE STEP SIGNAL.

NOTE "C"

AFTER EACH USE OF PROGRAMMER AND BOTTLES, RESET PROGRAMMER TO ZERO, AND PRESS RESET BUTTON AT REMOTE N_2 BOTTLE STATION #1B.

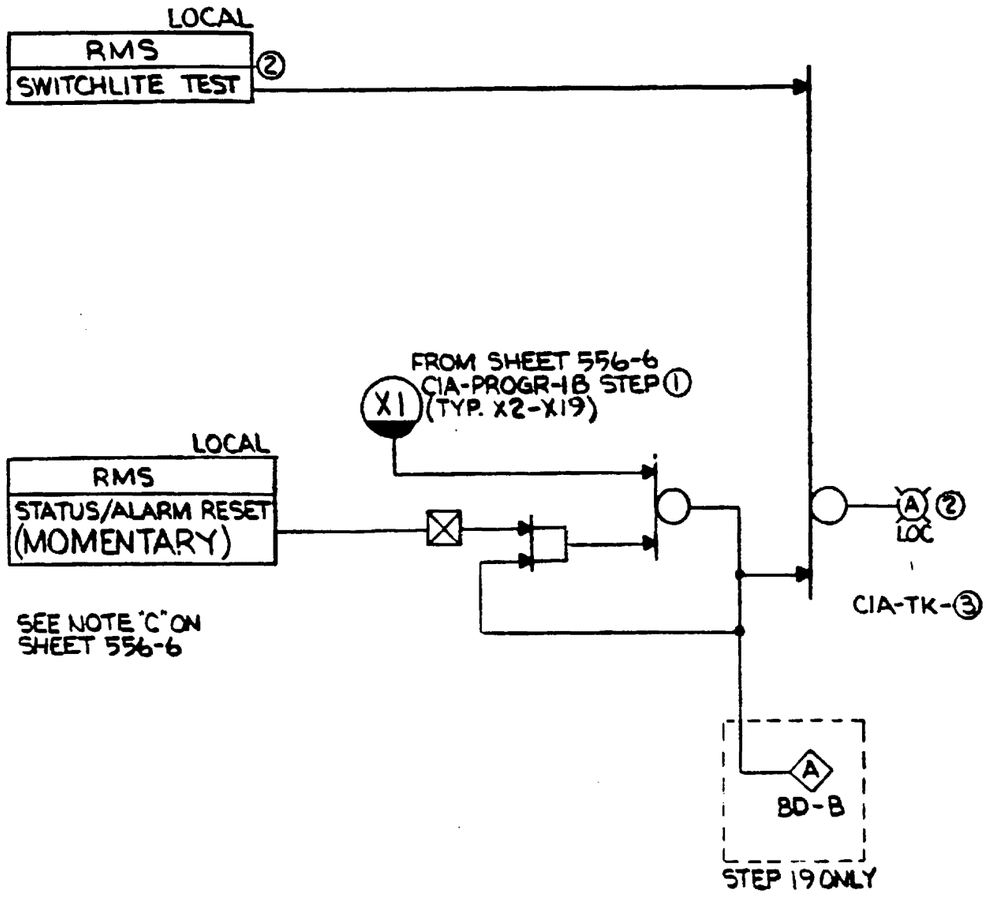

1 CIA-PROGR-1B STEP	2 LATCHING SWITCH LIGHT NO.	3 NITROGEN BOTTLE NO. CIA-TK-
0	NONE	NONE
1	1	1B
2	2	2B
3	3	3B
4	4	4B
5	5	5B
6	6	6B
7	7	7B
8	8	8B
9	9	9B
10	10	10B
11	11	11B
12	12	12B
13	13	13B
14	14	14B
15	15	15B
16	16	16B
17	17	17B
18	18	18B
19	19	19B

DESIGN CONTROL FOR START-UP SYSTEM(S)
24
TRANSFERRED TO WPPSS. ALL FUTURE CHANGES TO THIS (THESE) SYSTEM(S) SHALL BE INITIATED AND APPROVED BY THE SUPPLY SYSTEM. ALL REVISIONS TO THIS DRAWING REQUIRE APPROVAL OF THE SUPPLY SYSTEM

NOTE:
1. REFER TO INSTRUMENT MASTER DATA SHEETS FOR SETPOINT INFORMATION.

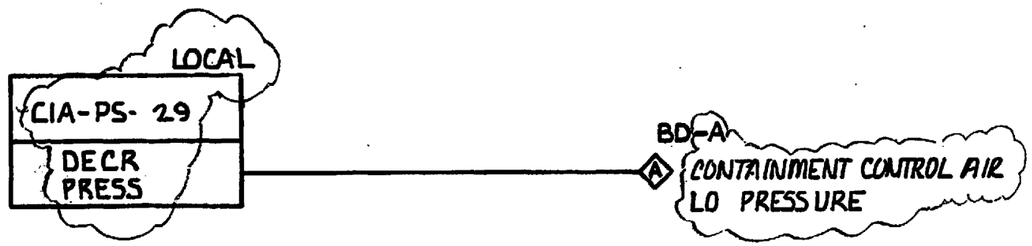

B&R ENGINEERING APPROVAL SIGNATURE ON THIS DRAWING IS ONLY FOR ENGINEERING PERFORMED BY BURNS AND ROE, INC. THE SUPPLY SYSTEM IS RESPONSIBLE FOR ALL CHANGES INCORPORATED IN ACCORDANCE WITH SUPPLY SYSTEM ENGINEERING DIRECTION (SPEDs OR DgCNs)

CIAS LOGIC DIAGRAM

Columbia Generating Station Final Safety Analysis Report	Control Logic Diagram – Primary Containment Instrument Air		
	Draw. No. M620-556-7	Rev. 6	Figure 7.3-15.5

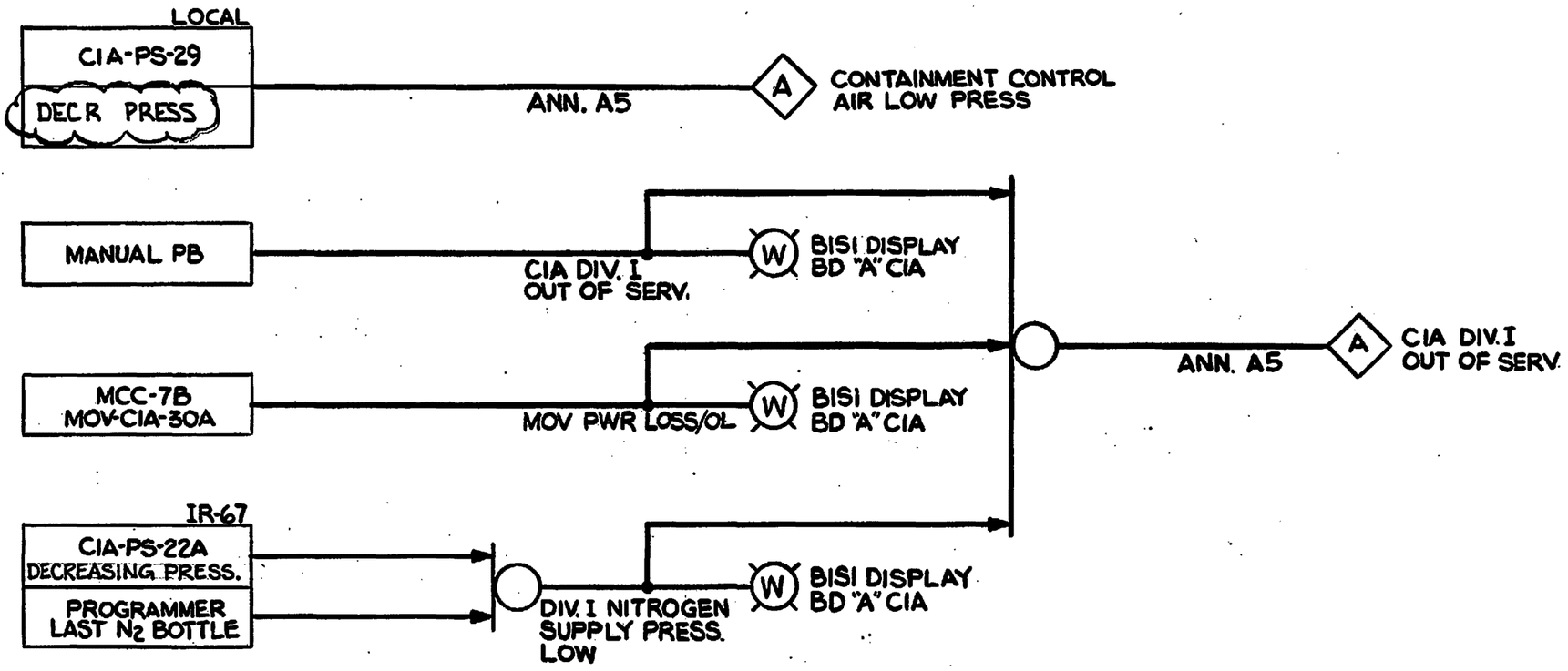

NOTE:
1. REFER TO INSTRUMENT MASTER DATA SHEETS FOR SETPOINT INFORMATION.

Columbia Generating Station Final Safety Analysis Report	Control Logic Diagram – Primary Containment Instrument Air		
	Draw. No. M620-556-7A	Rev. 4	Figure 7.3-15.6

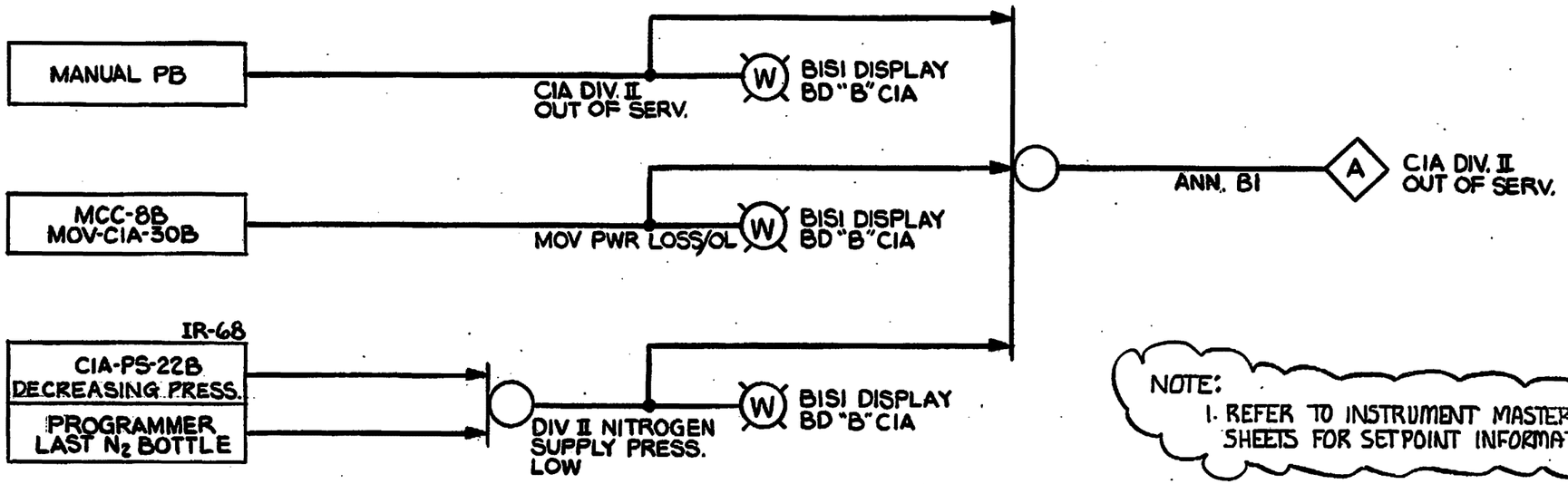
MANUAL PB
CIA DIV. II OUT OF SERV.
W
BISI DISPLAY BD "B" CIA
MCC-8B MOV-CIA-30B
MOV PWR LOSS/OL
W
BISI DISPLAY BD "B" CIA
ANN. 81
A
CIA DIV. II OUT OF SERV.
IR-68
CIA-PS-22B DECREASING PRESS.
PROGRAMMER LAST N_2 BOTTLE
DIV II NITROGEN SUPPLY PRESS. LOW
W
BISI DISPLAY BD "B" CIA
NOTE:
1. REFER TO INSTRUMENT MASTER DATA SHEETS FOR SETPOINT INFORMATION.

"A"	RMS	RMS & IND.LT. LOC.	VALVE NO.	REMARK
27100		BD-A	CIA-V-20	DIV I
27101		BD-A	CIA-V-30A	DIV I
27102		BD-B	CIA-V-30B	DIV II

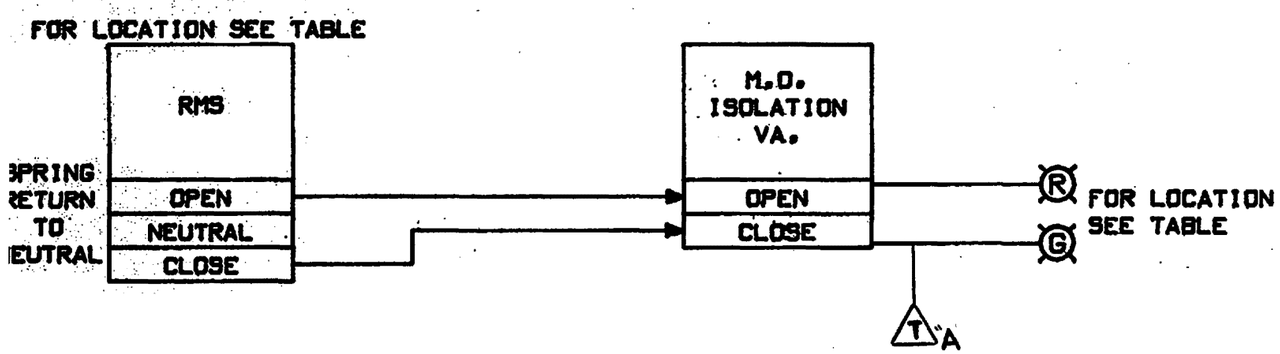

DESIGN CONTROL FOR START-UP SYSTEM(S) 24 TRANSFERRED TO WPPSS. ALL FUTURE CHANGES TO THIS (THESE) SYSTEM(S) SHALL BE INITIATED AND APPROVED BY THE SUPPLY SYSTEM. ALL REVISIONS TO THIS DRAWING REQUIRE APPROVAL OF THE SUPPLY SYSTEM

CONTAINMENT ISOLATION VALVE
CONTROL LOGIC DIAGRAM

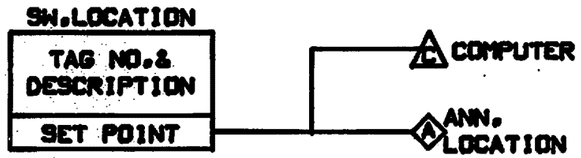

TAG NO.	SW. LOCATION	DESCRIPTION	SET POINT	ANN. LOCATION	REMARK
C1A-dPIS-1A	LCL	FILTER C1A-F-1A DIFF.PRESS.HI	INCR PRESS	BD-A	C0322
C1A-dPIS-1B	LCL	FILTER C1A-F-1B DIFF.PRESS.HI	INCR PRESS	BD-B	C0323
C1A-dPIS-2A	LCL	FILTERSC1A-F-2A DIFF.PRESS.HI	INCR PRESS	BD-A	C0320
C1A-dPIS-2B	LCL	FILTERS C1A-F-3A DIFF.PRESS.HI	INCR PRESS	BD-B	C0321

NOTE:
1. REFER TO INSTRUMENT MASTER DATA SHEETS FOR SETPOINT INFORMATION.

DESIGN CONTROL FOR START-UP SYSTEM(S) 24 TRANSFERRED TO WPPSS. ALL FUTURE CHANGES TO THIS (THESE) SYSTEM(S) SHALL BE INITIATED AND APPROVED BY THE SUPPLY SYSTEM. ALL REVISIONS TO THIS DRAWING REQUIRE APPROVAL OF THE SUPPLY SYSTEM

ALARM ANNUNCIATOR &COMPUTER INPUT CONTROL LOGIC DIAGRAM

Columbia Generating Station Final Safety Analysis Report	Control Logic Diagram – Primary Containment Instrument Air		
	Draw. No. M620-556-9	Rev. 5	Figure 7.3-15.9

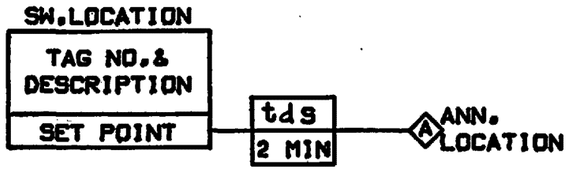

TAG NO.	SW. LOCATION	DESCRIPTION	SET POINT	ANN. LOCATION	REMARK
C1A-PS-3	1R-72	C1A AIR RECEIVER PRESSURE	DECR PRESS	BD-A	

NOTE:
1. TIME DELAY RELAY INFORMATION IS CONTROLLED ON E514-30 & E514-31.
2. REFER TO INSTRUMENT MASTER DATA SHEETS FOR SETPOINT INFORMATION.

ALARM ANNUNCIATOR INPUT
CONTROL LOGIC DIAGRAM

7.4 SYSTEMS REQUIRED FOR SAFE SHUTDOWN

7.4.1 DESCRIPTION

This section discusses the instrumentation and controls of the following systems required for safe plant shutdown:

a. Reactor core isolation cooling (RCIC) system,

b. Standby liquid control (SLC) system,

c. Residual heat removal shutdown cooling mode (RHR-SDC),

d. Remote shutdown system (RSS),

e. Anticipated transient without scram recirculation pump trip system (ATWS-RPT), and

f. Anticipated transient without scram alternate rod insertion (ATWS-ARI).

The systems discussed in this section are all capable of assisting the operator in achieving a safe plant shutdown. The remote shutdown and SLC systems are manually operated backups to the control room and reactor manual control systems, respectively, and are only required for special event conditions. Their use is not required to achieve a safe shutdown under normal, transient, or accident conditions. The normal shutdown cooling mode of residual heat removal (RHR) is available to the operator to remove residual heat when the reactor is shut down. Recirculation pump trip (ATWS-RPT) is used in conjunction with alternate rod insertion (ARI) and SLC to mitigate an ATWS event. Design of the ATWS-RPT and ARI systems is in accordance with the criteria provided in Reference 7.4-1. Loss of any of the systems will not impede safe shutdown of the plant. As such these systems are not required to be safety-related (except RCIC and alternate RHR SDC) and have not been designed to meet safety system requirements.

The sources that supply power to the safe shutdown systems originate from onsite ac and/or dc safety-related and non-safety-related buses. See Chapter 8 for a complete discussion of the safety-related and non-safety-related power sources.

7.4.1.1 Reactor Core Isolation Cooling System

7.4.1.1.1 Function

The RCIC system (see Section 5.4.6.2) is designed to maintain or supplement reactor vessel water inventory during the following conditions.

a. Normal Operation. When the reactor vessel is isolated from its primary heat sink (main condenser) and accompanied by a loss or unavailability of the reactor feedwater system; and

b. When the plant is being shut down and normal coolant flow from the feedwater system is stopped before the reactor is depressurized to a level where the reactor shutdown cooling mode of the RHR system can be placed into operation.

7.4.1.1.2 Operation

Schematic arrangements of system mechanical equipment are shown in Figure 5.4-11. The RCIC system component control logic is shown in Figure 7.4-1. Instruments are listed in Table 7.4-1. Operator information displays are shown in Figures 5.4-11 and 7.4-1.

The RCIC system can be initiated either manually or automatically. The control room operator can initiate RCIC by operating the manual initiation push button which simulates an automatic initiation or by activating each piece of equipment sequentially as required.

The RCIC system is automatically initiated by four redundant level switches, arranged in a one-out-of-two-twice logic configuration, which sense reactor vessel low water level (trip level 2).

The RCIC steam line isolation and the turbine steam exhaust motor-operated valves are normally open with their control switches key locked in the open position, and the turbine trip and throttle valve is normally open and these valves require no change of position for automatic system initiation. (Note: the key locked control switches do not prevent automatic isolation of these valves.)

The RCIC system responds to an automatic initiation signal as follows (actions are simultaneous unless stated otherwise):

a. The pump suction from the condensate storage tanks valve RCIC-V-10 (MO F010) is signaled open;

b. To ensure pump discharge flow is directed to the reactor vessel only, the test return line to the condensate storage tanks valves RCIC-V-22 (MO F022) and RCIC-V-59 (MO F059) are signaled closed;

c. The turbine steam inlet and the turbine lube oil cooler cooling water supply valves RCIC-V-45 (MO F045) and RCIC-V-46 (MO F046) are signaled to open;

d. When the turbine steam inlet valve RCIC-V-45 (MO F045) starts to open, the RCIC pump discharge to reactor vessel valve RCIC-V-13 (MO F013) and the turbine lube oil cooler supply valve RCIC-V-46 (F046) are signaled open. Valves RCIC-V-13 (MO F013) and RCIC-V-46 (F046) are prohibited from opening or if open, automatically closes when RCIC-V-45 (MO F045) or the turbine trip and throttle valve RCIC-V-1 (MO F001) is closed. A one-out-of-two-twice limit switch logic trips the main turbine on the opening of RCIC-V-13 (MO F013) and RCIC-V-45 (MO F045) to limit moisture introduction;

e. The barometric condenser vacuum tank vacuum pump is signaled to start; and

f. When valve RCIC-V-45 (MO F045) leaves the closed position the RCIC turbine is accelerated until the automatic flow controller setpoint is reached and the system discharge flow is controlled by the turbine electronic governor mechanism.

RCIC flow may be directed away from the vessel by diverting the pump discharge to the CST. This is accomplished by closing injection valve RCIC-V-13 and opening the test return valves (RCIC-V-22 and 59). The system is returned to injection mode by closing RCIC-V-59 and then opening RCIC-V-13. This mode of operation will not be used during events where an unacceptable source term is identified in primary containment. Diverting RCIC flow to the CST is not a safety-related function nor does this mode affect the ability of RCIC to initiate during plant transients. The system automatically switches to injection mode if the water level decreases to the low level initiation point (Level 2).

During system operation if the barometric condenser vacuum tank water level becomes high the condenser condensate discharge pump is automatically started and the condensate returned to the RCIC pump suction. When the system is not operating excess tank water is discharged through isolation valves RCIC-V-4 (AO F004) and RCIC-V-5 (AO F005) to the equipment drain system.

In the event the water level in the condensate storage tanks should become low the RCIC pump suction is automatically transferred from the condensate storage tank(s) to the suppression pool by opening valve RCIC-V-31 (MO F031). Two level switches mounted on a Seismic Category I standpipe in the reactor building are used to detect low water level in the condensate storage tank(s). Either switch can cause automatic suction transfer. Once valve RCIC-V-31 (F031) is fully open the condensate storage tank valve RCIC-V-10 (MO F010) is automatically closed.

The RCIC system includes design features which provide system equipment protection or accomplish primary containment isolation if certain types of abnormal events occur. The RCIC turbine is automatically shut down by closing the turbine trip and throttle valve, RCIC-V-1 (MO F001), if any of the following conditions are detected:

a. RCIC isolation signals:
   i. Low reactor pressure
   ii. High steam line flow
   iii. Instrumentation line break
   iv. High differential temperature across RCIC area cooler
   v. RCIC equipment area high temperature
   vi. High turbine exhaust diaphragm pressure
   vii. Manual isolation
b. Turbine overspeed
c. High turbine exhaust pressure
d. Low pump suction pressure
e. Low pressure in the RCIC discharge header(1)
f. Manual turbine trip actuated by the control room operator.

The steam inlet valve RCIC-V-45 (MO F045) is automatically closed and the turbine is shut down if the reactor vessel high water level (level 8) is reached. The isolation valve for RCIC turbine lube oil cooling water, RCIC-V-46 (MO F046), automatically closes if RCIC-V-45 (MO F045) closes, or if the turbine trip and throttle valve RCIC-V-1 closes. Valves RCIC-V-45 (MO F045) and RCIC-V-46 (MO F046) will reopen automatically and the turbine restarts when the water level is subsequently reduced to the low level initiation (level 2).

To protect the RCIC pump from overheating during low flow conditions the pump discharge flow and pressure are monitored. If the pump discharge pressure switch indicates the pump is running and the pump discharge flow switch indicates low flow, the minimum flow return line valve RCIC-V-19 (MO F019) is automatically opened. The minimum flow valve is automatically closed when flow is normal or when either the turbine trip and throttle valve (RCIC-V-1) or the steam inlet valve RCIC-V-45 (MO F045) is closed.

Air operated (AO) valves RCIC-V-25, RCIC-V-26, and RCIC-V-54 (AO F025, AO F026, and AO F054) and a condensate drain pot are provided in a drain pipe line arrangement just upstream of the turbine inlet valve. On receipt of an RCIC initiation signal, the drainage path is isolated by closing RCIC-V-25 and RCIC-V-26 (AO F025 and AO F026). The water level in the steam line drain condensate pot is controlled by a level switch and a valve RCIC-V-54 (AO F054) which energizes to allow condensate to flow out of the drain pot by bypassing the steam trap, in the event that the trap fails to adequately remove the condensate.

The RCIC system turbine exhaust line vacuum breaker isolation valves RCIC-V-110 (MO F080) and RCIC-V-113 (MO F086) are normally open but close automatically following system trip when both the low steam line pressure and high drywell pressure setpoint are exceeded.

NOTE: (1) This equipment protection feature has been disabled by placing the RCIC-RMS-PIS1 switch in the OVERRIDE position.

The leak detection and other protective signals of RCIC system will automatically signal the steam line warmup valve RCIC-V-76 (MO F076) closed, override the key lock control switch position and signal the steam line inboard isolation valve RCIC-V-63 (MO F063) and the outboard steam line isolation valve RCIC-V-8 (MO F008) closed if any of the following abnormal conditions exist:

a. Redundant temperature switches sense RCIC pump room area ventilation air inlet and outlet high differential temperature or high ambient temperature;

b. Redundant temperature switches sense RCIC pipe routing area high ambient temperature;

c. Redundant differential pressure switches sense RCIC steam line high flow or instrument line break (after an approximate 3 sec delay);

d. Redundant pressure switches sense RCIC turbine exhaust diaphragm high pressure. Both switches in the same division must actuate to cause isolation; and

e. A pressure switch senses RCIC low steam supply pressure.

For a complete description of the RCIC system leak detection isolation signal, see Section 7.6.1.3.1.

The RCIC system may be isolated after initiation by the control room operator by actuation of a push button which causes the outboard steam line isolation valve to close.

7.4.1.2 Standby Liquid Control System

7.4.1.2.1 Function

The SLC system (see Section 9.3.5) instrumentation is designed to initiate injection of a liquid neutron absorber into the reactor. Other instrumentation is provided to maintain this liquid chemical solution well above saturation temperature in readiness for injection.

The SLC system is a redundant method of manually shutting down the reactor to cold shutdown conditions from normal operation or from anticipated transient conditions when manual control rod insertion capability is lost. For the anticipated transient condition, boron solution can be injected into the reactor pressure vessel by running both SLC pumps simultaneously. The quantity of boron required to shut down the nuclear reaction can be injected in approximately 1 hr (see Section 9.3.5.2).

7.4.1.2.2 Operation

Schematic arrangements of system mechanical equipment is shown in Figure 9.3-14. The SLC system component control logic is shown in Figure 7.4-2. Operator information displays are shown in Figures 9.3-14 and 7.4-2.

The SLC system is initiated by the control room operator by turning the SYSTEM A or the SYSTEM B or both key locked switches to the OPERATE positions. When either or both of these switches are activated, both of the explosive-operated valves fire and both tank discharge valves (SLC-V-1A and SLC-V-1B) start to open immediately. The pumps are interlocked so that at least one of the two storage tank discharge valves (or the test tank discharge valve when testing) must be open for either or both pumps to run.

When the SLC system is initiated, the outboard isolation valve of the reactor water cleanup (RWCU) system is automatically closed. This prevents removal of the injected boron by the RWCU demineralizers.

7.4.1.3 Residual Heat Removal System/Shutdown Cooling Mode

7.4.1.3.1 Function

The normal shutdown cooling mode (see Section 5.4.7.1) of the RHR system is used when the reactor is shutdown and, if available, can be used for long-term cooling after vessel water level has been restored following accident conditions.

The RHR-SDC consists of instrumentation designed to provide decay heat removal capability for the core by accomplishing the following:

a. Reactor cooling during shutdown operation after the vessel pressure is reduced to approximately 48 psig,

b. Cooling the reactor water to a temperature at which reactor refueling and servicing can be accomplished, and

c. Diverting part of the shutdown flow to the reactor vessel head to condense the steam generated from the hot walls of the vessel while it is being flooded.

7.4.1.3.2 Operation

See Section 5.4.7.2.6 for a complete description of the RHR-SDC operation.

7.4.1.4 Remote Shutdown Systems

7.4.1.4.1 Function

The RSS are designed to achieve a cold reactor shutdown from outside the main control room following these postulated conditions:

a. The plant is at normal operating conditions and all plant personnel have been evacuated from the main control room and it is inaccessible;

b. The initial event that causes the main control room to become inaccessible is assumed to be such that the reactor operator can manually scram the reactor before leaving the main control room. Though the capability exists to manually scram from outside the control room, plant procedures realistically call for scramming before exiting the control room;

c. The main turbine pressure regulators may be controlling reactor pressure via the bypass valves. However, in the interest of demonstrating that the plant can accommodate even loss of the turbine controls, it is assumed that this turbine generator control panel function is also lost. Therefore, main steam line isolation is assumed to occur at a specified low turbine inlet pressure and reactor pressure is relieved through the relief valves to the suppression pool;

d. The reactor feedwater system which is normally available is also assumed to be inoperable. Reactor vessel water inventory is provided by the RCIC system or automatic depressurization system (ADS) and RHR as described in Section 7.4.1.4.2; and

e. Emergency dc power is assumed to be available.

The RSS are required only during times of main control room inaccessibility when normal plant operating conditions exist, i.e., no transients or accidents are occurring. Following such an event the remote shutdown function is provided by two redundant systems: the RSS and the alternate RSS.

7.4.1.4.2 Operation

Some of the existing systems used for normal reactor shutdown operation are also used in the remote shutdown capability to shut down the reactor from outside the main control room. The functions needed for remote shutdown control are provided with manual transfer switches that override controls from the main control room and transfer the controls to the remote shutdown control panels. Remote shutdown control is not possible without actuation of the transfer

devices. Necessary power supplies and control logic are also transferred. Operation of the transfer switches causes an alarm in the main control room.

During a main control room fire it has been postulated that high-to-low pressure interface valves RHR-V-8 and RHR-V-9 (series isolation valves) can simultaneously open. This would result in a loss-of-coolant accident (LOCA) outside the primary containment with no mitigation; these valves cannot close against a 1000 psi differential. For this reason, during normal plant operation, power is removed from RHR-V-9. This precludes operation via spurious control circuit energization. Access to the remote shutdown panel is administratively and procedurally controlled. All system equipment controls (for essential valves and pumps) necessary for proper system lineup and complete system control are located on the remote shutdown panels.

The remote shutdown function can be effected by one of two redundant systems. The primary (preferred) system uses the RHR system loop B (RHRB) while the secondary uses RHR loop A and is designated as the alternate RSS. The RCIC system is not required for reactor safe shutdown when using the minimum systems analyzed in GE document NEDO-24708A. Consequently, the mode of depressurization used for the alternate RSS is based on a rapid depressurization (ADS) in going from event initiation directly to cold shutdown where the low pressure system (RHR A) is used in the alternate shutdown cooling mode. This flow path uses the suppression pool as a heat sink when the service water system (SW loop A) is needed to bring the reactor to the cold low pressure condition.

When the RCIC system is available, then manual actuation of relief valves and the initiation of the RCIC system will maintain reactor water inventory and bring the reactor to a hot shutdown condition after scram. During this phase of shutdown, the suppression pool will be cooled by operating the RHR system in the suppression pool cooling mode. Reactor pressure will be controlled and core decay and sensible heat rejected to the suppression pool by relieving steam pressure through the relief valves.

Manual operation of the relief valves will cool the reactor and reduce its pressure at a controlled rate until reactor pressure becomes so low that the RCIC system is unable to sustain operation. The RHR system will then be operated in the shutdown cooling mode using the RHR system heat exchanger to cool reactor water and bring the reactor to the cold low pressure condition.

Equipment/functions that have transfer and control switches or indicators located on the remote shutdown and the alternate remote shutdown control panels are shown in the Licensee Controlled Specifications.

7.4.1.5 Anticipated Transient Without Scram - Recirculation Pump Trip

7.4.1.5.1 Function

The ATWS-RPT function is to trip the reactor recirculation pumps in the event of an abnormal operating occurrence in conjunction with failure of the reactor protection system (RPS).

7.4.1.5.2 Operation

Schematic arrangement of system mechanical equipment is shown in Figure 5.4-6.

The ATWS-RPT is automatically initiated by reactor vessel low water level (level 2) and/or reactor vessel high pressure. Instruments are listed in Table 7.4-2. The sensor logic configuration is "one-out-of-two-twice" for tripping the reactor recirculating pump feeder breakers. See Figure 7.4-3.

The ATWS-RPT system is an energize-to-operate system. The sensor logic channels and the feeder breaker trip coil circuitry receive power from the 125-V dc batteries from Divisions 1 and 2.

7.4.1.6 Anticipated Transient Without Scram - Alternate Rod Insertion

7.4.1.6.1 Function

The ATWS-ARI function is to actuate valves in the scram air header to reduce the air pressure in the header allowing the scram inlet and discharge valves to open providing an alternate scram. The design is diverse and independent from the RPS.

7.4.1.6.2 Operation

Schematic arrangement of the system mechanical equipment is shown in Figure 4.6-5. Logic arrangement is shown in Figures 7.4-4 and 7.4-5.

The ATWS-ARI is automatically initiated by reactor vessel low water level or reactor vessel high pressure. Instruments are listed in Table 7.4-3. The sensor logic configuration is "two-out-of-two" for either parameter input for energizing the scram air header exhaust solenoid valves to vent the header. The system can also be actuated manually. The ATWS-ARI is an energize-to-operate system. The sensor logic channels and solenoid valves receive power from the 125-V dc batteries from Divisions 1 and 2.

7.4.1.7 Design Basis

The safe shutdown systems are designed to provide timely protection against the onset and consequences of conditions that threaten the integrity of the fuel barrier and the reactor coolant pressure boundary (RCPB). Chapter 15 identifies and evaluates events that jeopardize the fuel barrier and RCPB. The methods of assessing barrier damage and radioactive material releases, along with the methods by which abnormal events are identified, are presented in Chapter 15. No design basis accident shall be considered for the RSS systems (including LOCA). Therefore, control of engineered safety feature (ESF) systems for protective action outside the main control room is not required.

7.4.1.7.1 Variables Monitored to Provide Protective Actions

All safe shutdown systems are initiated by operator actions, with the exception of ATWS-RPT and ATWS-ARI which are actuated by level and/or pressure sensors and RCIC which is activated by low reactor vessel water level (level 2).

The plant conditions which require protective action involving safe shutdown are described in Chapter 15.

7.4.1.7.2 Location and Minimum Number of Sensors

The Technical Specifications identify the minimum number of sensors required to monitor safety-related variables. There are no sensors in the safe shutdown systems which have a spatial dependence.

7.4.1.7.3 Prudent Operational Limits

Prudent operational limits for each safety-related variable trip setting are selected with sufficient margin so that a spurious safe shutdown system initiation is avoided. It is then verified by analysis that the release of radioactive materials, following postulated gross failures of the fuel or the nuclear system process barrier, is kept within acceptable bounds.

7.4.1.7.4 Margin

The margin between operational limits and the allowable values for safe shutdown systems are addressed for those parameters listed in the Technical Specifications.

7.4.1.7.5 Levels

Levels requiring protective action are established in the Technical Specifications.

7.4.1.7.6 Range of Transient, Steady State, and Environmental Conditions

See Section 3.11 for environmental conditions. See Sections 8.2.1 and 8.3.1 for the maximum and minimum range of energy supply to the safe shutdown systems instrumentation and controls. All safety-related instrumentation and controls are specified and purchased to withstand the effects of energy supply extremes.

The ATWS-RPT and ATWS-ARI systems are required to function only during an anticipated operational occurrence, not a design basis accident. Therefore, all the ATWS-RPT and ATWS-ARI equipment is located outside containment and is qualified for the temperature, pressure, humidity, and radiation levels experienced during the anticipated operational occurrence.

7.4.1.7.7 Malfunctions, Accidents, and Other Unusual Events Which Could Cause Damage to Safety Systems

Chapter 15 describes the following credible accidents and events: floods, storms, tornadoes, earthquakes, fires, LOCA, pipe break outside containment, and feedwater line break. Each of these events is discussed below for the safe shutdown systems.

7.4.1.7.7.1 Floods. The buildings containing safe shutdown system components have been designed to meet the probable maximum flood (PMF) at the site location. See Section 2.4. For a discussion of internal flooding protection see Sections 3.4 and 3.6.

7.4.1.7.7.2 Storms and Tornadoes. The buildings containing safe shutdown system components have been designed to withstand meteorological events described in Section 3.3.

7.4.1.7.7.3 Earthquakes. The structures containing safe shutdown system components have been seismically qualified (or shown to maintain integrity) as described in Sections 3.7 and 3.8 and will remain functional during and following a safe shutdown earthquake (SSE). Seismic qualification of instrumentation and electrical equipment is discussed in Section 3.10.

7.4.1.7.7.4 Fires. To protect the safe shutdown systems in the event of a postulated fire, the redundant portions of the safe shutdown systems are isolated by electrical separation barriers or physical distance. The use of separation and barriers ensures that even though some portion of the systems may be affected, the safe shutdown systems will continue to provide the required protective action. A fire detection system using heat detectors and product of combustion detectors is provided in power generation control complex (PGCC) floor sections and in panels containing safe shutdown system components mounted on these floor sections. A Halon fire suppression system is provided in the same areas. See Appendix F for a discussion of Appendix R fire protection.

7.4.1.7.7.5 Loss-of-Coolant Accident. The safe shutdown systems components located inside containment which are functionally required following a LOCA have been environmentally qualified to remain functional as discussed in Section 3.11.

7.4.1.7.7.6 Pipe Break Outside Primary Containment. Protection is provided for safe shutdown system components, as required from the effects of breaks outside primary containment. See Section 3.6.

7.4.1.7.7.7 Missiles. Protection for safe shutdown systems is described in Section 3.5.

7.4.1.7.8 Minimum Performance Requirements

Minimum performance requirements for safe shutdown systems instrumentation and controls are provided in the Technical Specifications.

7.4.1.8 Final System Drawings

Functional and architectural design difference between the PSAR and FSAR are listed in Table 1.3-8.

7.4.2 ANALYSIS

The safe shutdown systems are designed such that loss of instrument air, a plant load rejection, or a turbine trip will not prevent the completion of the safety function. No abnormal operation is assumed for the RSS which, by itself, performs no safety-related function.

7.4.2.1 Conformance to 10 CFR 50 Appendix A - General Design Criteria

The following is a discussion of conformance to those general design criteria (GDC) which apply specifically to the safe shutdown systems. See Section 3.1 for a discussion of GDC which apply equally to all safety-related systems.

GDC 19 - Control Room

The RSS consists of equipment located outside the control room which is sufficient to provide and ensure safe shutdown of the reactor.

GDC 34 - Residual Heat Removal

Refer to Section 3.1.2.4.5.

7.4.2.2 Conformance to IEEE Standards

The following is a discussion of conformance to IEEE 279-1971 which applies specifically to the safe shutdown systems. See Section 7.1.2.3 for a discussion of IEEE Standards which apply equally to all safety-related systems.

General Functional Requirement (IEEE 279-1971, paragraph 4.1)

Since the RSSs, by themselves, do not perform any safety-related function, they do not fall within the criteria set by IEEE 279. However, since certain RSS components interface with safety-related systems, such as RHR and RCIC, during normal operation, they are part of those systems and meet the design criteria for those systems.

Remote shutdown is provided by two redundant systems: the Division 2 RSS and the Division 1 alternate RSS. Portions of these systems are electrically separated by the physical and spatial requirements described in Section 8.3.1.4. A design basis fire in the main control room that fails all components to their worst operational state is considered an incredible event. As such only the Division 2 power distribution system for the Division 2 remote shutdown is completely isolated from the effects of a main control room fire. Control room interaction that would result in the loss of power to the alternate RSS as well, is not considered credible per Columbia Generating Station (CGS) SSER commitments (licensing condition 12). The RSSs consist of components that are qualified to Quality Class I and Seismic Category I requirements. Operation of any RSS transfer switch is annunciated in the main control room.

The RCIC is automatically initiated when reactor vessel water level is determined to be below a predetermined limit.

The SLC system is initiated by the control room operator. Display instrumentation in the control room provides the operator with information on reactor vessel water level, pressure, neutron flux level, control rod position, and scram valve status allowing assessment of the need for initiation of the SLC system.

The ATWS-RPT and ATWS-ARI are automatically initiated when reactor vessel low water level and/or reactor vessel high pressure predetermined limits are exceeded. ATWS-RPT and ATWS-ARI do not perform a safety-related function and do not fall within the criteria of IEEE 279. However, applicable paragraphs of IEEE 279 are addressed in the following paragraphs:

Single-Failure Criterion (IEEE 279-1971, paragraph 4.2)

The reactor shutdown cooling function is safety related and required to comply with single failure requirements of IEEE 279 and GDC 34. However, the preferred RHR-SDC suction path uses a single loop of the RRC system through two series, redundant division, isolation

valves RHR-V-8 and RHR-V-9 and is, therefore, not single failure proof. To meet the single failure requirements of IEEE 279 and GDC 34, a safety related, single failure proof design for this function is provided by the alternate shutdown cooling mode of RHR. See Section 5.4.7.1.1 and the notes to Figure 15.2-10, Activity C1 or C2 for a complete discussion of the alternate shutdown cooling mode of RHR. The alternate shutdown cooling mode is safety related and single failure proof in that two redundant divisions of equipment are available. Since the normal shutdown cooling mode is the preferred path, Energy Northwest will maintain all the preferred path components as safety related, Quality Class I.

The RCIC system alone is not required to meet the single-failure criterion. The RCIC initiation and isolation initiation sensors and associated logic do, however, meet the single-failure criterion for automatic system initiation or isolation. The single-failure criteria is met through physical and electrical separation of equipment as described in Section 8.3.1.4.

The SLC system serves as backup to the control rod drive (CRD) system for controlling reactivity if the CRD fails and is required for ATWS. It is not necessary for the SLC system to meet the single failure criterion.

The ATWS-RPT and ATWS-ARI are not required to meet the single failure criterion. However, with the exception of the electrical power and the final actuating equipment the system is designed to the single failure criterion.

Quality of Components and Modules (IEEE 279-1971, paragraph 4.3)

See Section 3.11 for safe shutdown system conformance. The ATWS-ARI components are selected to satisfy the quality requirements in Reference 7.4-1.

Equipment Qualification (IEEE 279-1971, paragraph 4.4)

Vendor certification requires that the safe shutdown system sensors, manual switches, and logic components perform in accordance with the requirements listed on the purchase specification as well as in the intended application. This certification, in conjunction with the existing field experience with these components in this application, will serve to qualify these components.

For a discussion of safe shutdown system equipment qualification see Sections 3.5, 3.6, 3.10, and 3.11.

Channel Integrity (IEEE 279-1971, paragraph 4.5)

For a discussion of RCIC and SLC system Channel Integrity under all extremes of conditions described in Sections 7.4.1.1 and 7.4.1.2, see Section 3.11.

Channel Independence (IEEE 279-1971, paragraph 4.6)

Channel independence is maintained through application of the CGS separation criteria as described in Section 8.3.1.4.

Control and Protection Interaction (IEEE 279-1971, paragraph 4.7)

The RCIC, SLC, ATWS-RPT, and ATWS-ARI systems have no interaction with plant control systems.

Derivation of Systems Inputs (IEEE 279-1971, paragraph 4.8)

All inputs to the RCIC system, RSS, RHR-SDC, ATWS-RPT, and ATWS-ARI that are essential to their operation are direct measures of appropriate variables.

The SLC system display instrumentation in the control room provides the operator with directly measured information on reactor vessel water level, pressure, neutron flux level, control rod position and valve status. Based on this information the operator can assess the need for the SLC system.

Capability for Sensor Checks (IEEE 279-1971, paragraph 4.9)

See Section 7.4.2.3, Regulatory Guide 1.22.

Capability for Test and Calibration (IEEE 279-1971, paragraph 4.10)

See Section 7.4.2.3, Regulatory Guide 1.22.

Channel Bypass or Removal from Operation (IEEE 279-1971, paragraph 4.11)

Calibration of a sensor which introduces a single instrument channel trip will not cause a protective action without the coincident trip of a second channel. Removal of a sensor from operation during calibration does not prevent the redundant instrument channel from functioning.

Operating Bypasses (IEEE 279-1971, paragraph 4.12)

There are no operating bypasses within the safe shutdown systems.

Indication of Bypasses (IEEE 279-1971, paragraph 4.13)

For a discussion of bypass and inoperability indication see Section 7.1, with the exception of ATWS-RPT and ATWS-ARI, which are under administrative control.

Access to Means for Bypassing (IEEE 279-1971, paragraph 4.14)

Access to means of bypassing any safety action or safety function is under the administrative control of the control room supervisor/shift manager. Other approved methods of controlling access to bypasses are also used. These include key locks with administrative control of the access to keys, procedurally controlled equipment lineups, e.g., locked valve checklists, and the use of mechanical locking devices and annunciators and other indications, e.g., BISI (Regulatory Guide 1.47, Bypass and Inoperable Status Indication for Nuclear Power Plant Safety Systems, described in Section 7.1.2.4). These additional methods help to prevent inadvertent bypasses or to alert the plant operators to safety function bypasses occurring either from equipment failures or from manually induced bypasses that result as part of testing, maintenance, or equipment repair activities.

Key-locked control switches that provide a means of controlling the access to a safety function bypass are designed to allow key removal only in the "safe" or "accident" positions. Access to the associated keys is procedurally controlled. When not in use, keys are under the administrative control of the control room supervisor/shift manager and stored in a key locker. The keys are audited once per day by the control room supervisor/shift manager. When operation of a key-locked control switch is required to be immediate, such as in the case of the reactor mode switch, the key may be left in the lock during normal plant operation to ensure timely actuation.

Multiple Set Points (IEEE 279-1971, paragraph 4.15)

There are no multiple setpoints within the safe shutdown systems.

Completion of Protective Action Once it is Initiated (IEEE 279-1971, paragraph 4.16)

The RCIC is automatically stopped on high vessel water level, system malfunction trip signals or if steam supply pressure drops below that necessary to sustain turbine operation.

The SLC system explosive valves remain open once fired. The injection valves will not close, and discharge pump motors will continue to run unless terminated by operator action. The ATWS-ARI system once initiated will actuate valves in the scram air header thus providing an alternate method to scram. This action will continue until the trip logic is cleared and the operator resets the system.

Manual Initiation (IEEE 279,1971, paragraph 4.17)

See Sections 7.4.1.1, 7.4.1.2, 7.4.1.3, 7.4.1.4, 7.4.1.5, and 7.4.1.6 for a discussion of the manual initiation of RCIC, SLC, RHR-SDC, RSS, ATWS-RPT, and ATWS-ARI systems.

Access to Set Point Adjustment (IEEE 279-1971, paragraph 4.18)

All access to setpoint adjustments for RHR-SDC, RCIC, ATWS-RPT, and ATWS-ARI are under administrative control of the control room supervisor/shift manager.

The operation of the SLC system is not dependent on or affected by any setpoint adjustment or calibration.

Identification of Protective Actions (IEEE 279-1971, paragraph 4.19)

Automatic initiation of the RCIC system is annunciated in the control room.

The ATWS-RPT breaker trip is annunciated in the control room. The ATWS-ARI system initiation is annunciated in the control room.

The explosive valve status of the SLC system, once fired, is indicated in the control room.

Information Readout (IEEE 279-1971, paragraph 4.20)

The RCIC, ATWS-RPT, and ATWS-ARI systems are designed to provide the operator with accurate and timely information pertinent to their status. They do not give anomalous indications confusing to the operator.

The SLC system discharge pressure of the pumps and storage tank level is indicated in the control room.

System Repair (IEEE 279-1971, paragraph 4.21)

The RCIC, SLC, ATWS-RPT, and ATWS-ARI systems are designed to permit repair or replacement of components during normal plant operation.

Recognition and location of a failed component will be accomplished during periodic testing or by annunciation in the control room.

Identification (IEEE 279-1971, paragraph 4.22)

Controls and instruments for RCIC, SLC, ATWS-RPT, and ATWS-ARI systems are located in the main control room and clearly identified by nameplates. Relays are located in separate panels for RCIC, SLC, ATWS-RPT, and ATWS-ARI systems use only. Relays and panels are identified by nameplates. All wiring and cabling is labeled to indicate its divisional assignment as well as its system assignment (see Section 8.3.1.3).

7.4.2.3 Regulatory Guides Conformance

Regulatory Guide conformance for remote shutdown control and instrumentation is provided in this chapter for each system whose instrumentation and controls interface with the RSS.

Conformance to Regulatory Guides for the RHR shutdown cooling mode is discussed in Section 7.3.2.

The following is a discussion of conformance to those Regulatory Guides which apply specifically to the RCIC, SLC, ATWS-RPT, and ATWS-ARI systems. See Section 7.1.2.4 for a discussion of Regulatory Guides which apply equally to all safety-related systems.

Regulatory Guide 1.22 - Periodic Testing of Protection System Actuation Functions

The RCIC system, with the exception of RCIC-V-13 (injection valve), is capable of being completely tested during normal plant operation to verify that each element of the system is capable of performing its intended safety function. RCIC-V-13 is operability tested during plant shutdown.

The explosive valves may be tested during plant shutdown. The explosive valve control circuits are continuously monitored and annunciated in the control room. The remainder of the SLC system may be tested during normal plant operation to verify that each element is capable of performing its intended function.

Testing of RCIC, SLC, ATWS-RPT, and ATWS-ARI systems sensors during normal plant operation is accomplished by valving out each sensor from its process line and applying a test pressure source. This verifies the operability of the sensor, its calibration range, and the operability of associated control room logic components.

Also, the ATWS-RPT trip logic up to the breaker trip can be tested during plant operation. The ATWS-ARI trip logic can be tested up to the solenoid valves during plant operation.

Regulatory Guide 1.53 - Application of the Single-Failure Criterion to Nuclear Power Plant Protection Systems

See Section 7.4.2.2 and IEEE 279, paragraph 4.2, for the RCIC, SLC, ATWS-RPT, and ATWS-ARI systems.

Regulatory Guide 1.62 - Manual Initiation of Protective Actions

The SLC system is actuated by two key-locked switches on the main control room console. Operating either switch starts one of the injection pumps, actuates both of the explosive valves,

opens both pump suction motor-operated valves, and closes the RWCU system outboard isolation valve.

The ATWS-RPT feeder breakers can be initiated manually from the main control room by actuation of the feeder breaker control switch.

The ATWS-ARI scram air header blowdown valves can be manually initiated from the main control room.

The RCIC system can be manually initiated for vessel water level makeup.

7.4.3 REFERENCES

7.4-1 NEDE-31096-P, Licensing Topical Report, Anticipated Transients Without Scram, response to NRC ATWS RULE 10 CFR 50.62, December 1985.

Table 7.4-1

Reactor Core Isolation Cooling
System Instrumentation

Function	Instrument[a]
Reactor vessel high water level (level 8)	Level switch (B22-N024B, D) MS-LIS-24B, D
Pump low suction pressure	Pressure switch (E51-N006) RCIC-PS-6
Reactor vessel low water level (level 2)	Level switch (B22-N037A-D) MS-LIS-37A-D
Drywell high pressure	Pressure switch (B22-N048A-D) MS-PS-48A-D
Condensate storage tanks low water level	Level switch (E51-N015A, B) RCIC-LS-15A, B

[a] Instruments in parentheses are the GE designation.

Table 7.4-2

ATWS-Recirculation Pump Trip
System Instrumentation

Function	Instrument[a]
Reactor vessel low water level (level 2)	Level indicating switch MS-LIS-36A-D (B22-N036)
Reactor vessel high pressure	Pressure switch MS-PS-45A-D (B22-N045)

[a] Instruments in parentheses are the GE designation.

Table 7.4-3

ATWS-Alternate Rod Insertion
System Instrumentation

Function	Instrument[a]
Reactor vessel low water level (level 2)	Level indicating switch MS-LIS-36A-D (B22-N036)
Reactor vessel high pressure	Pressure switch MS-PS-45A-D (B22-N045)

[a] Instruments in parentheses are the GE designation.

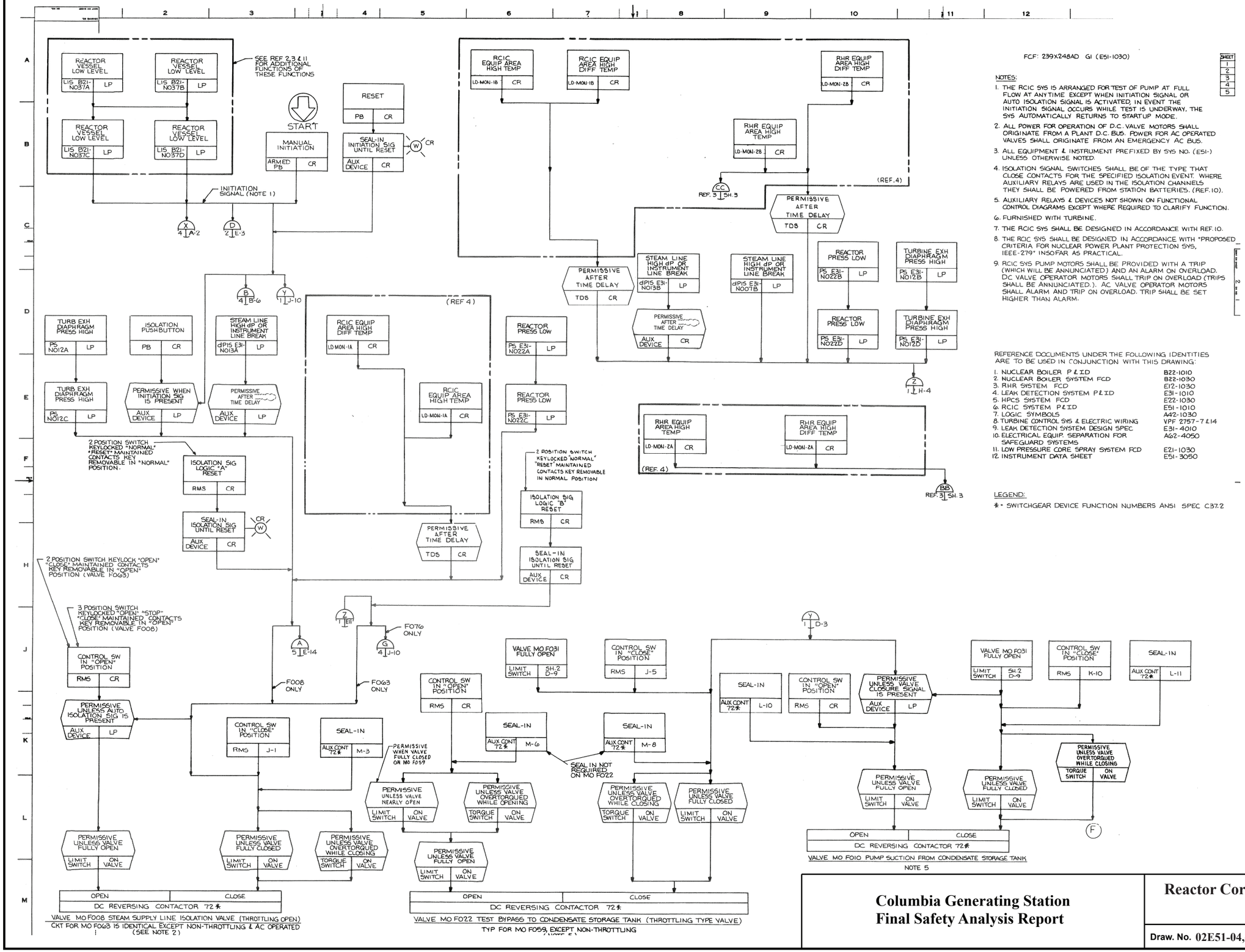

FCF: 239X248AD GI (E51-1030)

SHEET
1
2
3
4
5

NOTES:

1. THE RCIC SYS IS ARRANGED FOR TEST OF PUMP AT FULL FLOW AT ANYTIME EXCEPT WHEN INITIATION SIGNAL OR AUTO ISOLATION SIGNAL IS ACTIVATED, IN EVENT THE INITIATION SIGNAL OCCURS WHILE TEST IS UNDERWAY, THE SYS AUTOMATICALLY RETURNS TO STARTUP MODE.
2. ALL POWER FOR OPERATION OF D.C. VALVE MOTORS SHALL ORIGINATE FROM A PLANT D.C. BUS. POWER FOR AC OPERATED VALVES SHALL ORIGINATE FROM AN EMERGENCY AC BUS.
3. ALL EQUIPMENT & INSTRUMENT PREFIXED BY SYS NO. (E51-) UNLESS OTHERWISE NOTED.
4. ISOLATION SIGNAL SWITCHES SHALL BE OF THE TYPE THAT CLOSE CONTACTS FOR THE SPECIFIED ISOLATION EVENT. WHERE AUXILIARY RELAYS ARE USED IN THE ISOLATION CHANNELS THEY SHALL BE POWERED FROM STATION BATTERIES. (REF.10).
5. AUXILIARY RELAYS & DEVICES NOT SHOWN ON FUNCTIONAL CONTROL DIAGRAMS EXCEPT WHERE REQUIRED TO CLARIFY FUNCTION.
6. FURNISHED WITH TURBINE.
7. THE RCIC SYS SHALL BE DESIGNED IN ACCORDANCE WITH REF.10.
8. THE RCIC SYS SHALL BE DESIGNED IN ACCORDANCE WITH "PROPOSED CRITERIA FOR NUCLEAR POWER PLANT PROTECTION SYS, IEEE-279" INSOFAR AS PRACTICAL.
9. RCIC SYS PUMP MOTORS SHALL BE PROVIDED WITH A TRIP (WHICH WILL BE ANNUNCIATED) AND AN ALARM ON OVERLOAD. DC VALVE OPERATOR MOTORS SHALL TRIP ON OVERLOAD (TRIPS SHALL BE ANNUNCIATED.). AC VALVE OPERATOR MOTORS SHALL ALARM AND TRIP ON OVERLOAD. TRIP SHALL BE SET HIGHER THAN ALARM.

REFERENCE DOCUMENTS UNDER THE FOLLOWING IDENTITIES ARE TO BE USED IN CONJUNCTION WITH THIS DRAWING:

1. NUCLEAR BOILER P&ID	B22-1010
2. NUCLEAR BOILER SYSTEM FCD	B22-1030
3. RHR SYSTEM FCD	E12-1030
4. LEAK DETECTION SYSTEM P&ID	E31-1010
5. HPCS SYSTEM FCD	E22-1030
6. RCIC SYSTEM P&ID	E51-1010
7. LOGIC SYMBOLS	A42-1030
8. TURBINE CONTROL SYS & ELECTRIC WIRING	VPF 2757-7&14
9. LEAK DETECTION SYSTEM DESIGN SPEC	E31-4010
10. ELECTRICAL EQUIP. SEPARATION FOR SAFEGUARD SYSTEMS	A62-4050
11. LOW PRESSURE CORE SPRAY SYSTEM FCD	E21-1030
12. INSTRUMENT DATA SHEET	E51-3050

LEGEND:

** SWITCHGEAR DEVICE FUNCTION NUMBERS ANSI SPEC C37.2

Columbia Generating Station
Final Safety Analysis Report

Reactor Core Isolation Cooling System (FCD)

Draw. No. 02E51-04,6,1	Rev. 13	Figure 7.4-1.1

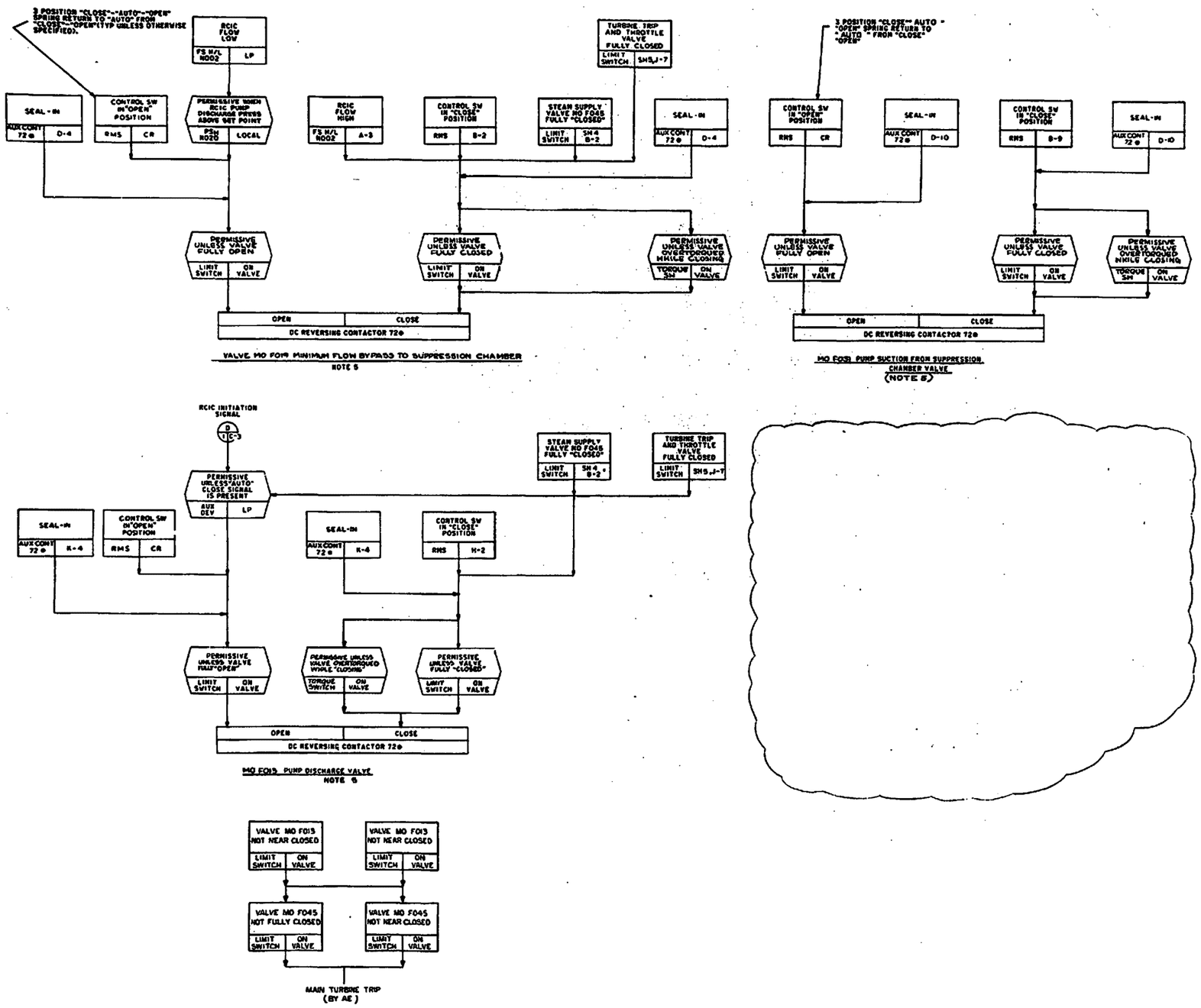

Columbia Generating Station Final Safety Analysis Report	Reactor Core Isolation Cooling System (FCD)		
	Draw. No. 02E51-04,6,2	Rev. 7	Figure 7.4-1.2

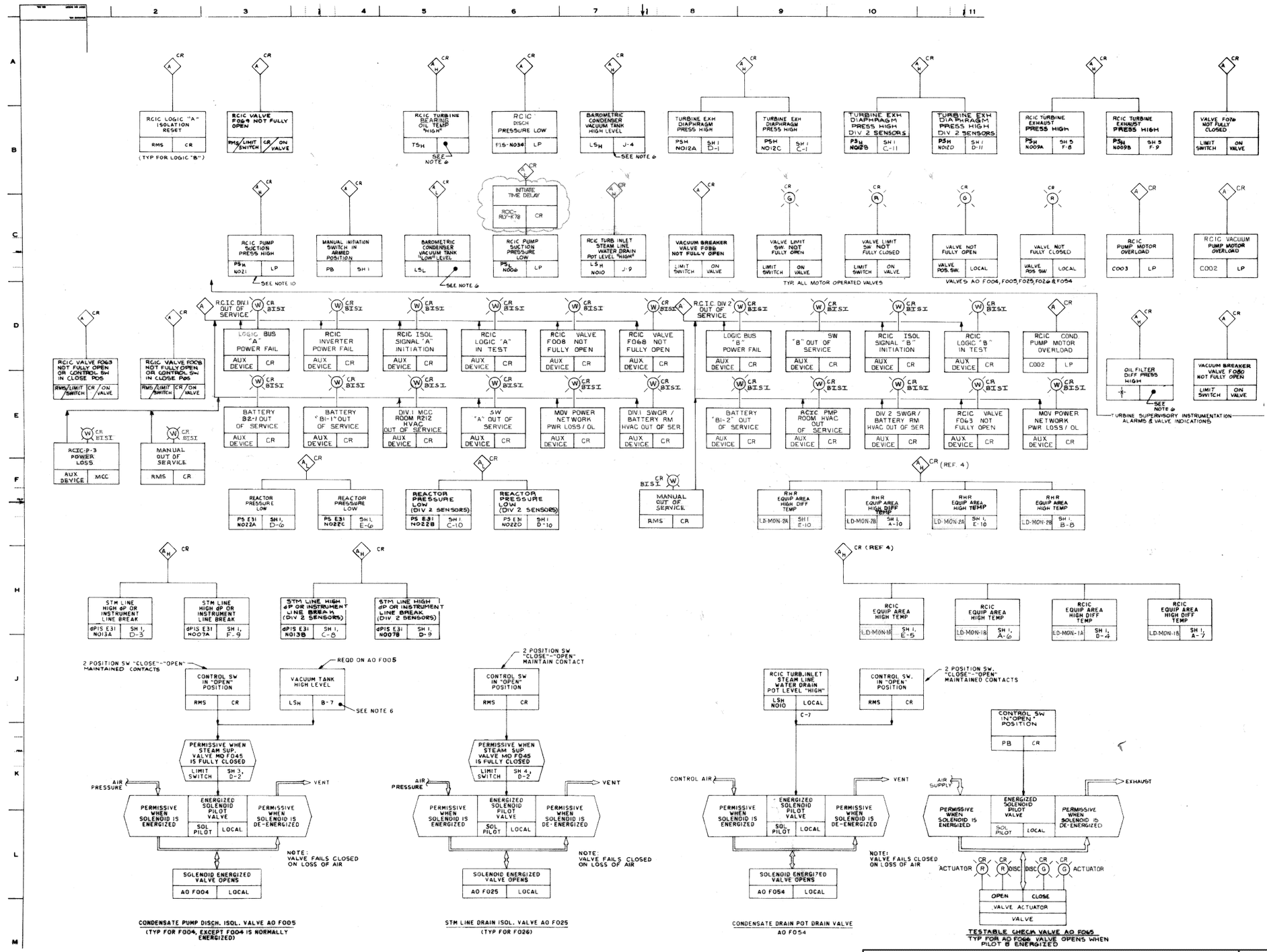
RCIC LOGIC "A" ISOLATION RESET
RMS | CR
(TYP FOR LOGIC "B")
RCIC VALVE F064 NOT FULLY OPEN
RMS/LIMIT SWITCH | CR / ON VALVE
RCIC TURBINE BEARING OIL TEMP "HIGH"
TSH
SEE NOTE 6
RCIC DISCH PRESSURE LOW
PIS-N034 | LP
BAROMETRIC CONDENSER VACUUM TANK HIGH LEVEL
LSH J-4
SEE NOTE 6
TURBINE EXH DIAPHRAGM PRESS HIGH
PSH N012A | SH 1 D-1
TURBINE EXH DIAPHRAGM PRESS HIGH
PSH N012C | SH 1 C-1
TURBINE EXH DIAPHRAGM PRESS HIGH DIV 2 SENSORS
PS N012B | SH 1 C-11
TURBINE EXH DIAPHRAGM PRESS HIGH DIV 2 SENSORS
PSH N012D | SH 1 D-11
RCIC TURBINE EXHAUST PRESS HIGH
PSH N009A | SH 3 F-8
RCIC TURBINE EXHAUST PRESS HIGH
PS N009B | SH 3 F-9
VALVE F076 NOT FULLY CLOSED
LIMIT SWITCH | ON VALVE
RCIC PUMP SUCTION PRESS HIGH
PSH N021 | LP
SEE NOTE 10
MANUAL INITIATION SWITCH IN ARMED POSITION
PB | SH 1
BAROMETRIC CONDENSER VACUUM TANK "LOW" LEVEL
LSL
SEE NOTE 6
INITIATE TIME DELAY
RCIC RLY-K78 | CR
RCIC PUMP SUCTION PRESSURE LOW
PS-N006 | LP
RCIC TURB INLET STEAM LINE WATER DRAIN POT LEVEL "HIGH"
LSH N010 | J-9
VACUUM BREAKER VALVE F080 NOT FULLY OPEN
LIMIT SWITCH | ON VALVE
VALVE LIMIT SW. NOT FULLY OPEN
LIMIT SWITCH | ON VALVE
VALVE LIMIT SW NOT FULLY CLOSED
LIMIT SWITCH | ON VALVE
TYP ALL MOTOR OPERATED VALVES
VALVE NOT FULLY OPEN
VALVE POS. SW. | LOCAL
VALVES AO F004, F005, F025, F026 & F054
VALVE NOT FULLY CLOSED
VALVE POS SW | LOCAL
RCIC PUMP MOTOR OVERLOAD
C003 | LP
RCIC VACUUM PUMP MOTOR OVERLOAD
C002 | LP
RCIC VALVE F063 NOT FULLY OPEN OR CONTROL SW IN CLOSE POS
RMS/LIMIT SWITCH | CR / ON VALVE
RCIC VALVE F008 NOT FULLY OPEN OR CONTROL SW IN CLOSE POS
RMS/LIMIT SWITCH | CR / ON VALVE
RCIC-P-3 POWER LOSS
AUX DEVICE | MCC
MANUAL OUT OF SERVICE
RMS | CR
RCIC DIV.1 OUT OF SERVICE
LOGIC BUS "A" POWER FAIL
RCIC INVERTER POWER FAIL
RCIC ISOL SIGNAL "A" INITIATION
RCIC LOGIC "A" IN TEST
RCIC VALVE F008 NOT FULLY OPEN
RCIC VALVE F068 NOT FULLY OPEN
BATTERY B2-1 OUT OF SERVICE
BATTERY "B1-1" OUT OF SERVICE
DIV.1 MCC ROOM R212 HVAC OUT OF SERVICE
SW "A" OUT OF SERVICE
MOV POWER NETWORK PWR LOSS / OL
DIV.1 SWGR / BATTERY RM HVAC OUT OF SER
RCIC DIV.2 OUT OF SERVICE
LOGIC BUS "B" POWER FAIL
SW "B" OUT OF SERVICE
RCIC ISOL SIGNAL "B" INITIATION
RCIC LOGIC "B" IN TEST
RCIC COND PUMP MOTOR OVERLOAD
C002 | LP
BATTERY "B1-2" OUT OF SERVICE
RCIC PMP ROOM HVAC OUT OF SERVICE
DIV.2 SWGR / BATTERY RM HVAC OUT OF SER
RCIC VALVE F063 NOT FULLY OPEN
MOV POWER NETWORK PWR LOSS / OL
OIL FILTER DIFF PRESS HIGH
SEE NOTE 6
TURBINE SUPERVISORY INSTRUMENTATION ALARMS & VALVE INDICATIONS
VACUUM BREAKER VALVE F080 NOT FULLY OPEN
LIMIT SWITCH | ON VALVE
REACTOR PRESSURE LOW
PS E31 N022A | SH 1, D-6
REACTOR PRESSURE LOW
PS E31 N022C | SH 1, E-6
REACTOR PRESSURE LOW (DIV 2 SENSORS)
PS E31 N022B | SH 1, C-10
REACTOR PRESSURE LOW (DIV 2 SENSORS)
PS E31 N022D | SH 1, D-10
MANUAL OUT OF SERVICE
RMS | CR
RHR EQUIP AREA HIGH DIFF TEMP
LD-MON-2A | SH 1, E-10
RHR EQUIP AREA HIGH DIFF TEMP
LD-MON-2B | SH 1, A-10
RHR EQUIP AREA HIGH TEMP
LD-MON-2A | SH 1, E-10
RHR EQUIP AREA HIGH TEMP
LD-MON-2B | SH 1, B-8
(REF 4)
STM LINE HIGH dP OR INSTRUMENT LINE BREAK
dPIS E31 N013A | SH 1, D-5
STM LINE HIGH dP OR INSTRUMENT LINE BREAK
dPIS E31 N007A | SH 1, F-9
STM LINE HIGH dP OR INSTRUMENT LINE BREAK (DIV 2 SENSORS)
dPIS E31 N013B | SH 1, C-8
STM LINE HIGH dP OR INSTRUMENT LINE BREAK (DIV 2 SENSORS)
dPIS E31 N007B | SH 1, D-9
RCIC EQUIP AREA HIGH TEMP
LD-MON-1B | SH 1, E-5
RCIC EQUIP AREA HIGH TEMP
LD-MON-1B | SH 1, A-6
RCIC EQUIP AREA HIGH DIFF TEMP
LD-MON-1A | SH 1, D-4
RCIC EQUIP AREA HIGH DIFF TEMP
LD-MON-1B | SH 1, A-7
2 POSITION SW "CLOSE"-"OPEN" MAINTAINED CONTACTS
CONTROL SW IN "OPEN" POSITION
RMS | CR
REQD ON AO F005
VACUUM TANK HIGH LEVEL
LSH | B-7
SEE NOTE 6
PERMISSIVE WHEN STEAM SUP. VALVE MO F045 IS FULLY CLOSED
LIMIT SWITCH | SH 3, D-2
AIR PRESSURE
VENT
PERMISSIVE WHEN SOLENOID IS ENERGIZED
ENERGIZED SOLENOID PILOT VALVE
SOL PILOT | LOCAL
PERMISSIVE WHEN SOLENOID IS DE-ENERGIZED
NOTE: VALVE FAILS CLOSED ON LOSS OF AIR
SOLENOID ENERGIZED VALVE OPENS
AO F004 | LOCAL
CONDENSATE PUMP DISCH. ISOL. VALVE AO F005
(TYP FOR F004, EXCEPT F004 IS NORMALLY ENERGIZED)
2 POSITION SW "CLOSE"-"OPEN" MAINTAIN CONTACT
CONTROL SW IN "OPEN" POSITION
RMS | CR
PERMISSIVE WHEN STEAM SUP. VALVE MO F045 IS FULLY CLOSED
LIMIT SWITCH | SH 4, D-2
AIR PRESSURE
VENT
PERMISSIVE WHEN SOLENOID IS ENERGIZED
ENERGIZED SOLENOID PILOT VALVE
SOL PILOT | LOCAL
PERMISSIVE WHEN SOLENOID IS DE-ENERGIZED
NOTE: VALVE FAILS CLOSED ON LOSS OF AIR
SOLENOID ENERGIZED VALVE OPENS
AO F025 | LOCAL
STM LINE DRAIN ISOL. VALVE AO F025
(TYP FOR F026)
RCIC TURB. INLET STEAM LINE WATER DRAIN POT LEVEL "HIGH"
LSH N010 | LOCAL
C-7
2 POSITION SW. "CLOSE"-"OPEN" MAINTAINED CONTACTS
CONTROL SW. IN "OPEN" POSITION
RMS | CR
CONTROL AIR
VENT
PERMISSIVE WHEN SOLENOID IS ENERGIZED
ENERGIZED SOLENOID PILOT VALVE
SOL PILOT | LOCAL
PERMISSIVE WHEN SOLENOID IS DE-ENERGIZED
NOTE: VALVE FAILS CLOSED ON LOSS OF AIR
SOLENOID ENERGIZED VALVE OPENS
AO F054 | LOCAL
CONDENSATE DRAIN POT DRAIN VALVE
AO F054
CONTROL SW IN "OPEN" POSITION
PB | CR
AIR SUPPLY
EXHAUST
PERMISSIVE WHEN SOLENOID IS ENERGIZED
ENERGIZED SOLENOID PILOT VALVE
SOL PILOT | LOCAL
PERMISSIVE WHEN SOLENOID IS DE-ENERGIZED
ACTUATOR
DISC
ACTUATOR
OPEN | CLOSE
VALVE ACTUATOR
VALVE
TESTABLE CHECK VALVE AO F065
TYP FOR AO F066 VALVE OPENS WHEN PILOT IS ENERGIZED

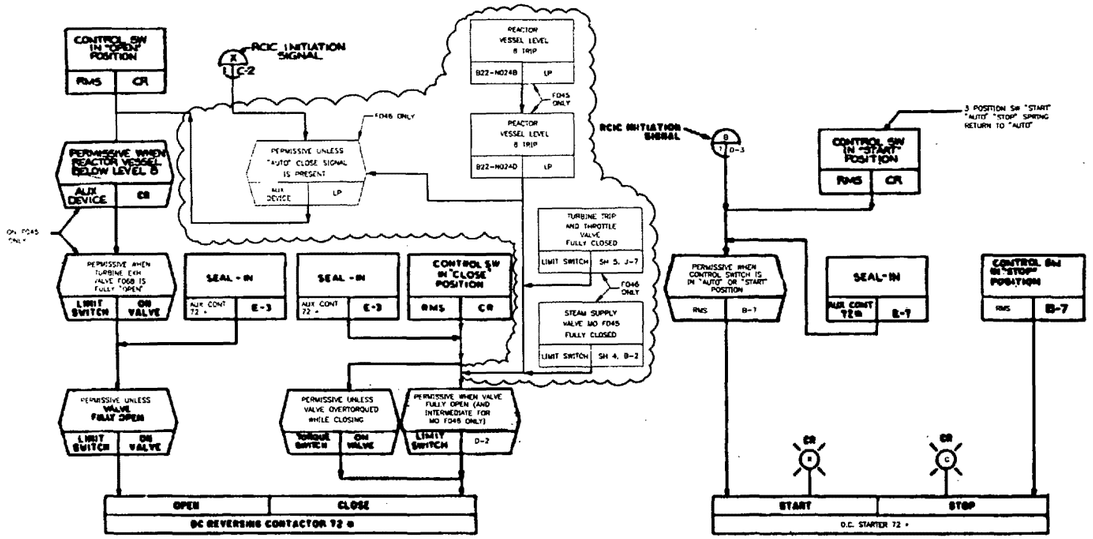

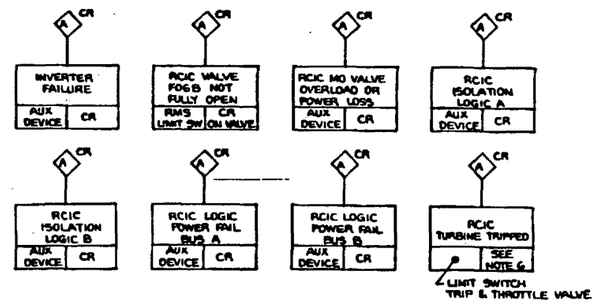

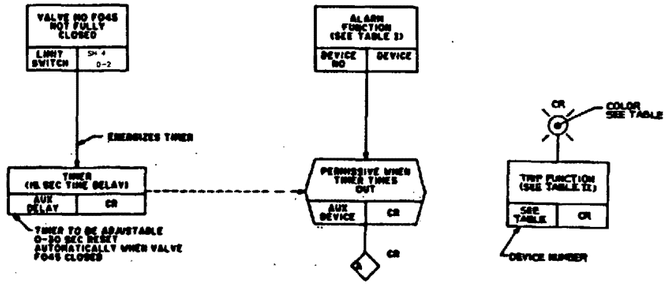

TABLE I

TURBINE CONTROL SUPERVISORY ALARMS

ALARM FUNCTION	INITIATING DEVICE NO.	DEVICE LOCATION	TYPE OF ALARM
TURBINE BRG. OIL PRESSURE LOW	PS -/-	SEE NOTE 6	LOW
VACUUM TANK LEVEL HIGH	PSH -/-	SEE NOTE 6	HIGH
RCIC FLOW LOW	FSL N002	LP	LOW

TABLE II

TURBINE INDICATING LIGHTS

ACTUATING DEVICE	TRIP FUNCTION	COLOR
REF 6	TRIP THROTTLE VALVE OPEN	RED
	TRIP THROTTLE VALVE CLOSED	GREEN
	GOVERNOR VALVE OPEN	RED
	GOVERNOR VALVE CLOSED	GREEN

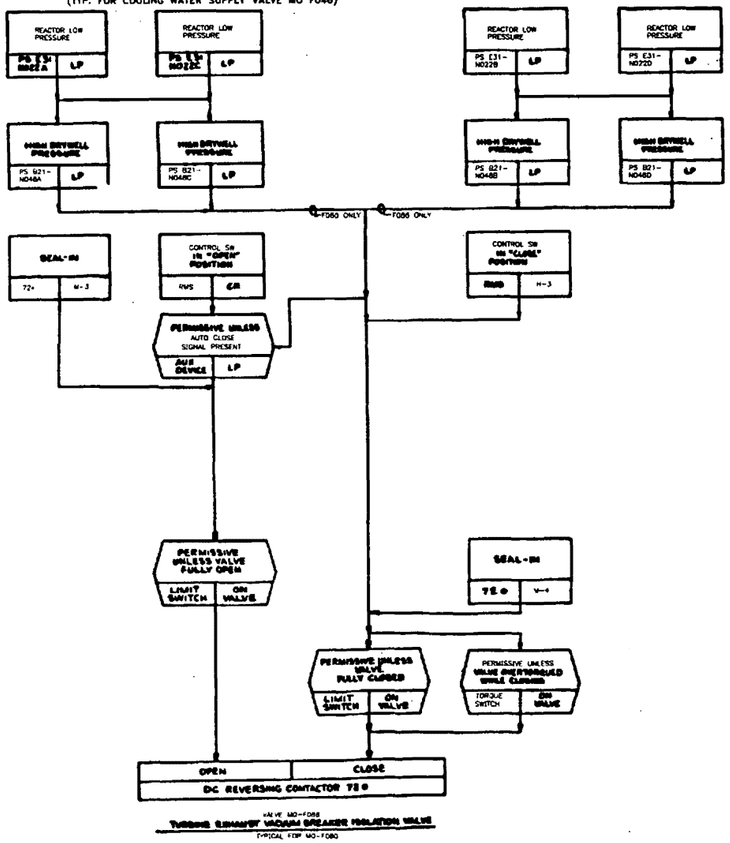

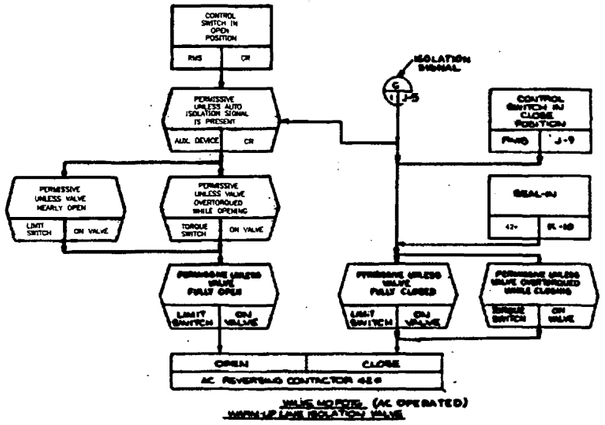

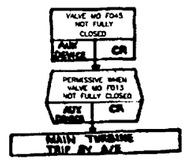

Columbia Generating Station
Final Safety Analysis Report

Reactor Core Isolation Cooling System (FCD)

Draw. No. 02E51-04,6,4 | Rev. 10 | Figure 7.4-1.4

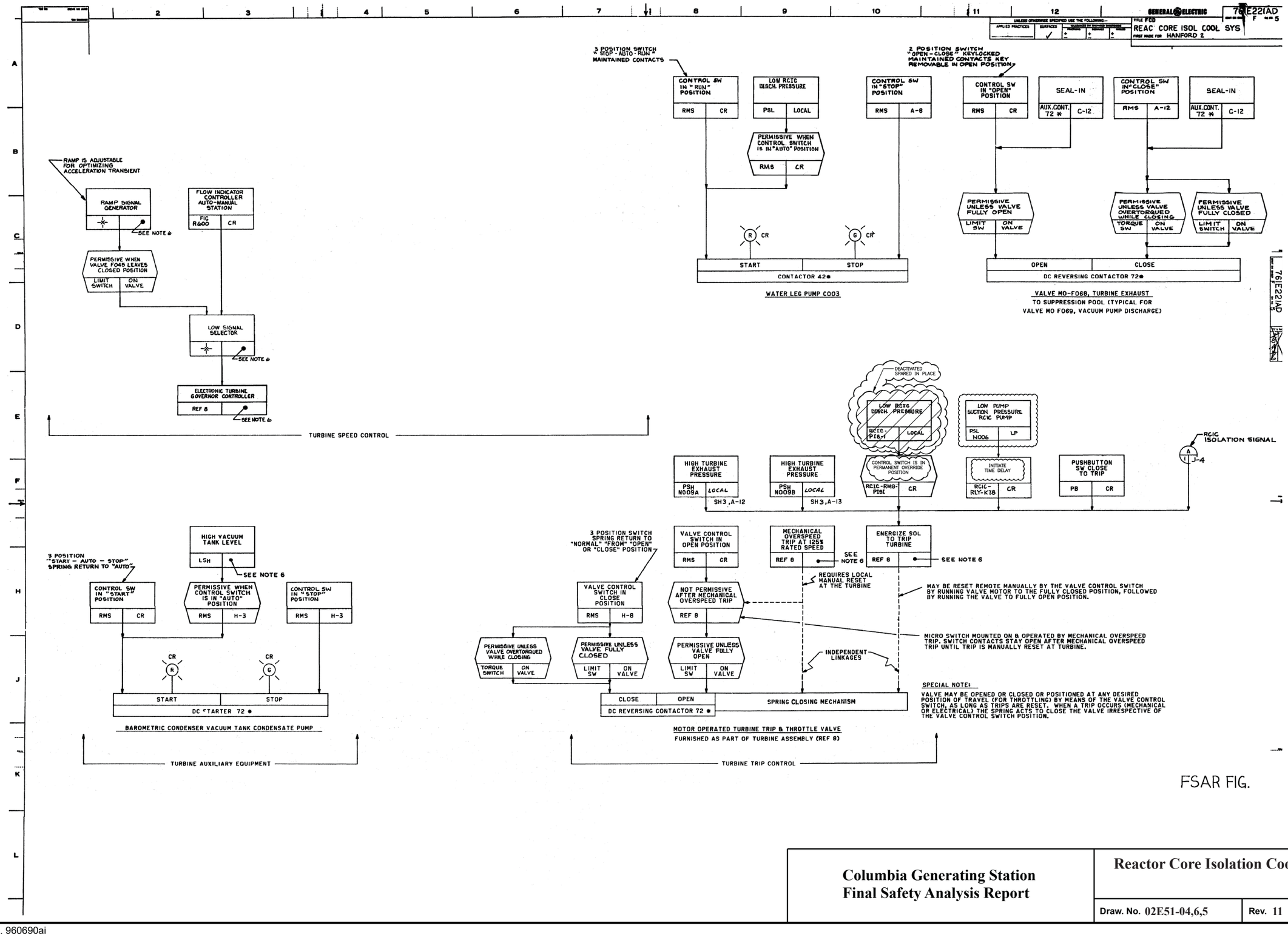

FSAR FIG.

Columbia Generating Station Final Safety Analysis Report	Reactor Core Isolation Cooling System (FCD)		
	Draw. No. 02E51-04,6,5	Rev. 11	Figure 7.4-1.5

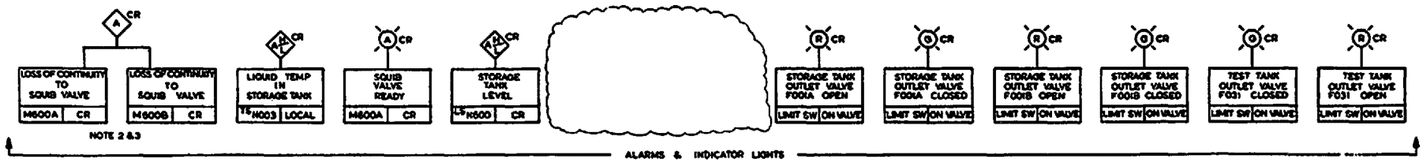

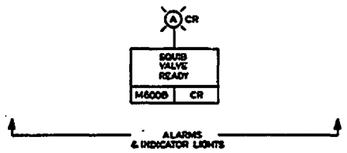

NOTES:

1. SYSTEM (A & B) CONTROL SWITCHES ARE KEYLOCKED IN "OFF" POSITION. SWITCHES BYPASS CONTINUITY MONITOR IN "OPERATE" POSITION, TO FIRE BOTH SQUIBS OF BOTH EXPLOSIVE VALVES.
2. CONTINUITY INDICATING LIGHT IS ON WHEN IGNITION CIRCUIT HAS CONTINUITY. ANNUNCIATOR TRIPS AND LIGHT GOES OUT UPON LOSS OF CONTINUITY.
3. CONTINUITY MONITOR SHALL BE CURRENT LIMITED AND WIRED TO PREVENT ACCIDENTAL FIRING OF EXPLOSIVE VALVES.
4. AUXILIARY RELAYS AND DEVICES NOT SHOWN.
5. STORAGE TANK OUTLET VALVES (F004A & B) ARE INTERLOCKED WITH THE TEST TANK OUTLET VALVE (F031) TO PREVENT INJECTION OF CONTROL SOLUTION WHEN THE BALANCE OF THE SYSTEM IS TESTED (USING THE SYSTEM CONTROL SWITCH) TO INJECT TEST TANK WATER INTO THE REACTOR.

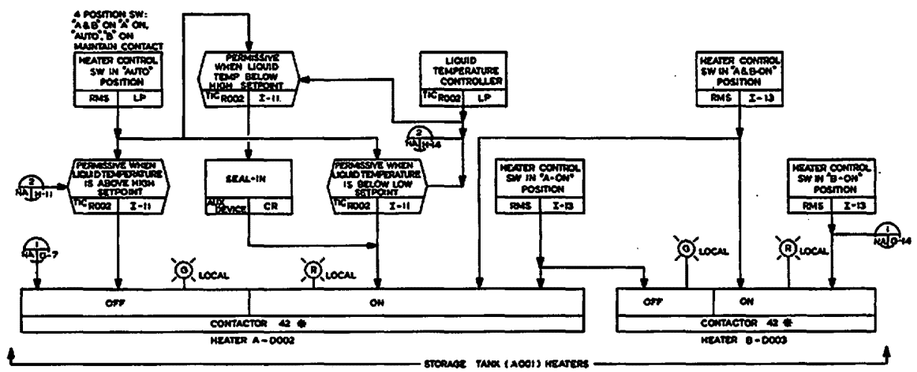

LEGEND:

✱ = SWITCHGEAR DEVICE FUNCTION NUMBER ANSI SPEC. C37.2.

MATCH NUMBER
ZONE LOCATION
SHEET NUMBER

MATCH CIRCLE LAST USED: 2

SUPPLEMENTAL DOCUMENTS: THE FOLLOWING IDENTITIES ARE TO BE USED IN CONJUNCTION WITH THIS DOCUMENT.

MPL NO:

1. C41 - 1010 — STANDBY LIQUID CONTROL SYS P&I D.
2. G33 - 1020 — REACTOR WATER CLEANUP SYS FCD.
3. A42 - 103C — LOGIC SYMBOLS.
4. C41 - 4010 — STANDBY LIQUID CONT SYS DESIGN SPEC.

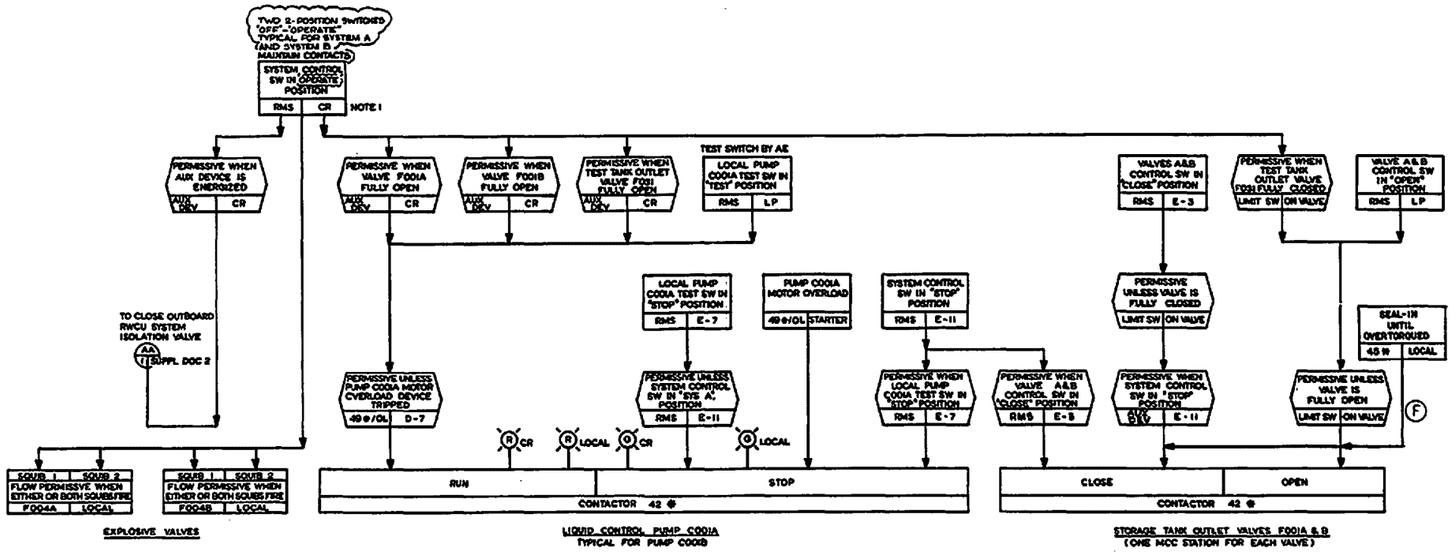

Columbia Generating Station Final Safety Analysis Report	Standby Liquid Control System - (FCD)		
	Draw. No. 02C41-05,9,1	Rev. 3	Figure 7.4-2

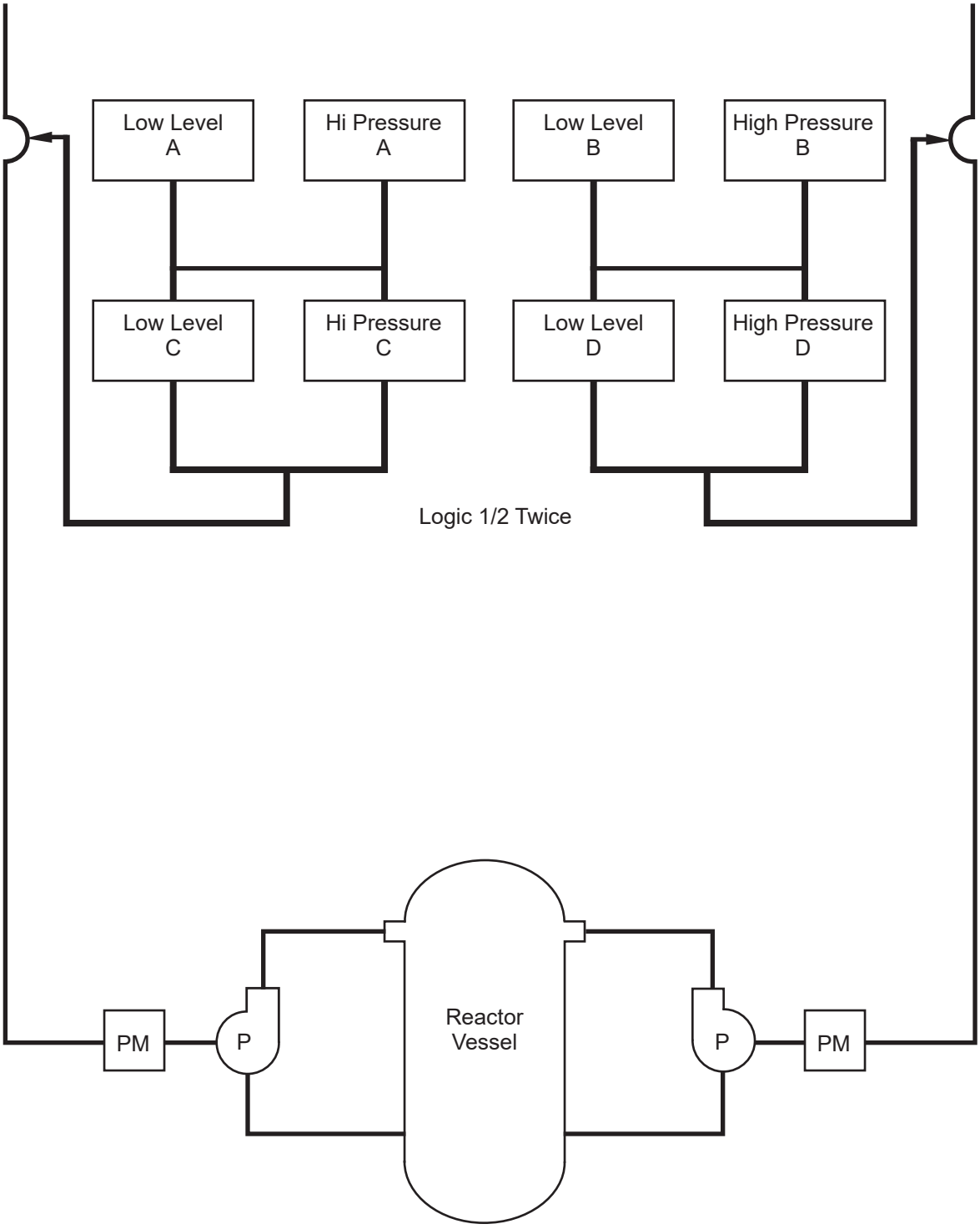

Columbia Generating Station Final Safety Analysis Report	Recirculation Pump Trip (ATWS-RPT) Logic		
	Draw. No. 920843.58	Rev.	Figure 7.4-3

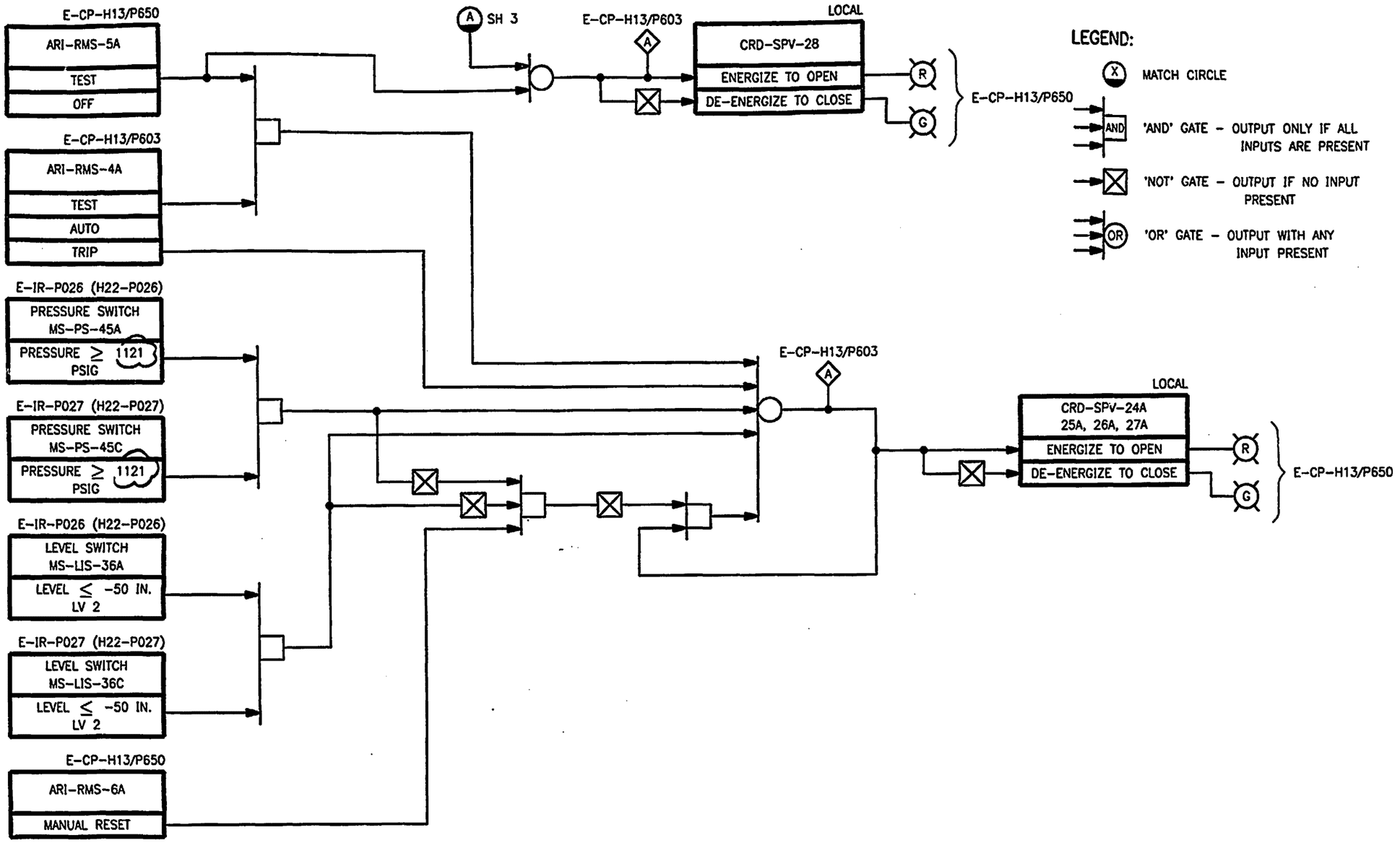

Columbia Generating Station Final Safety Analysis Report	ATWS-ARI Control Rod Drive, CRD-V-24A, 25A, 26A, 27A, and 28		
	Draw. No. M620-528-2	Rev. 2	Figure 7.4-4

Form No. 960690

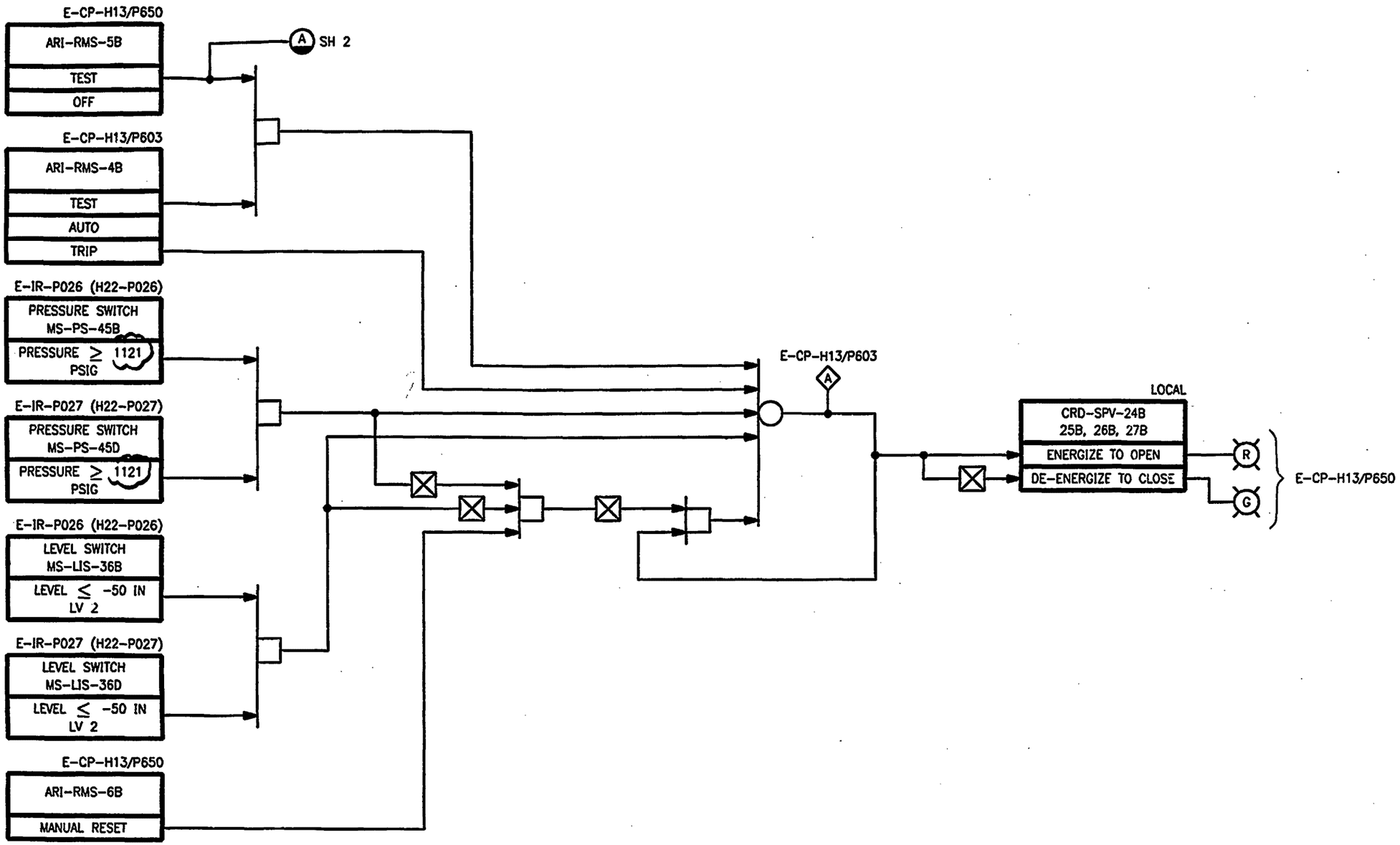

Columbia Generating Station Final Safety Analysis Report	ATWS-ARI Control Rod Drive, CRD-V-24B, 25B, 26B and 27B		
	Draw. No. M620-528-3	Rev. 2	Figure 7.4-5

Form No. 960690

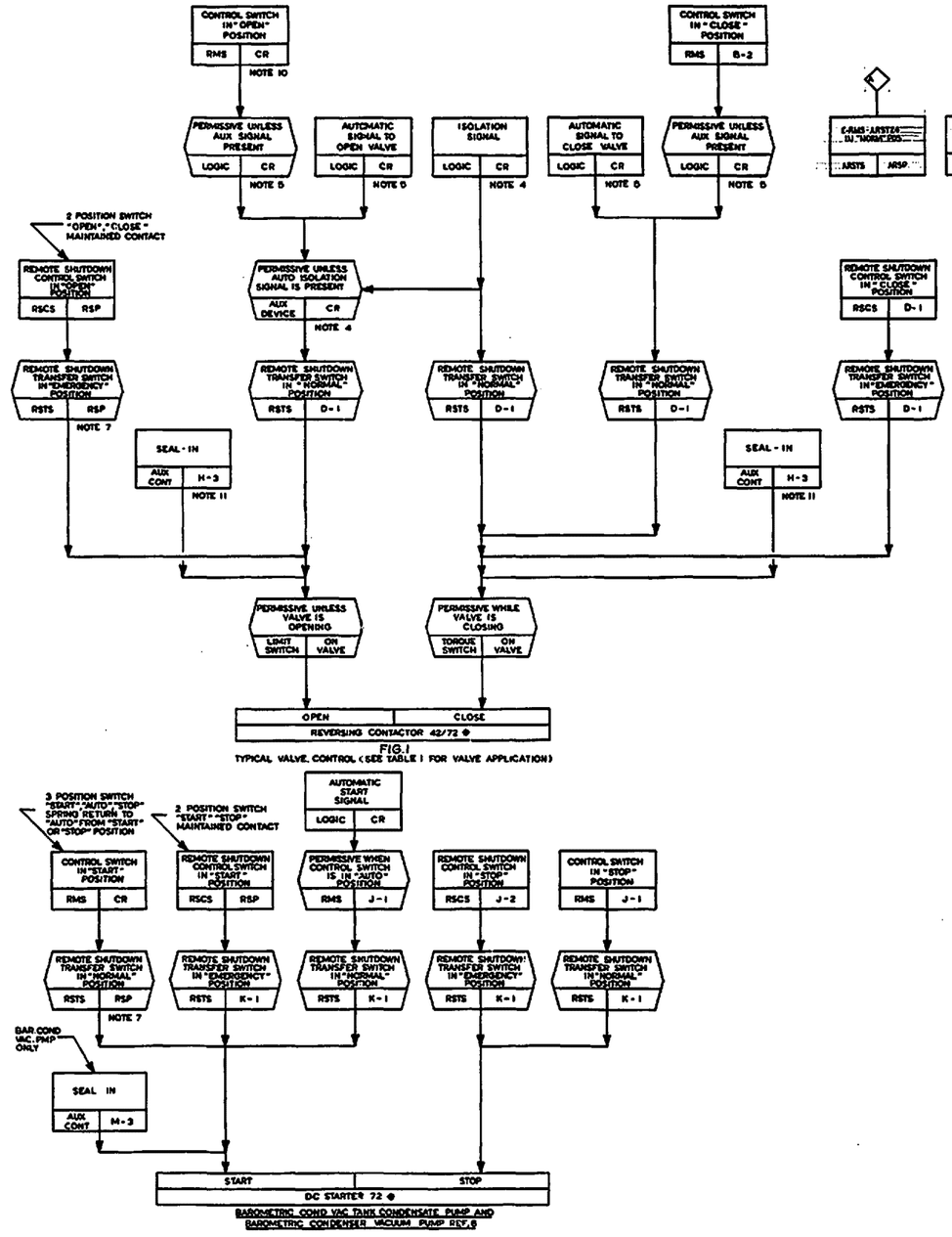

FIG.1
TYPICAL VALVE CONTROL (SEE TABLE I FOR VALVE APPLICATION)

BAROMETRIC COND VAC TANK CONDENSATE PUMP AND BAROMETRIC CONDENSER VACUUM PUMP REF.6

TYPICAL FOR MOTOR AND AIR OPERATED VALVES WITH REMOTE SHUTDOWN

TABLE I

TYPICAL MOTOR OPERATED VALVES WITH REMOTE SHUTDOWN (SEE FIG.1 FOR TYPICAL CONTROL)

MPL NO.	DESIGNATION	NOTE	REF.
B35-F023A	RECIRC PUMP SUCTION VALVE	5	11
E12-F003B	HEAT EXCHANGER SHELL SIDE OUTLET VALVE	1,5,15	8
E12-F004B	RHR PUMP "B" SUCTION VALVE	5,16	8
E12-F008A	SHUTDOWN SUCTION VALVE	5,15	8
E12-F008B	SHUTDOWN SUCTION VALVE	5,16	8
E12-F009	OUTBOARD SHUTDOWN ISOLATION VALVE	4,5,13,14	4
E12-F009	INBOARD SHUTDOWN ISOLATION VALVE	4,5,14	4
E12-F011B	RHR HX FLOW TO SUPPRESSION POOL VALVE	5	8
E12-F016B	CONTAINMENT SPRAY ISOLATION VALVE	5,16	8
E12-F024B	TEST RETURN VALVE	5,11,16	8
E12-F025B	RHR HX FLOW TO RCIC VALVE	5	8
E12-F027B	CONTAINMENT SPRAY VALVE	5,16	8
E12-F042B	RHR INJECTION VALVE	5,16	8
E12-F047B	HEAT EXCHANGER SHELL SIDE INLET VALVE	16	8
E12-F048B	HEAT EXCHANGER SHELL SIDE BYPASS VALVE	5,11,16	8
E12-F049	DISCHARGE TO RADWASTE VALVE	4,5,16	4
E12-F052B	STEAM LINE ISOLATION VALVE	4,5	8
E12-F053B	SHUTDOWN COOLING VALVE	5,16	4
E12-F068B	HX SERVICE WATER DISCHARGE VALVE	16	8
E51-F008	STEAM SUPPLY LINE ISOLATION VALVE (OUTBOARD)	4,11	6
E51-F010	PUMP SUCTION FROM CONDENSATE STORAGE TANK VALVE	5	6
E51-F013	RCIC PUMP DISCHARGE VALVE	5	6
E51-F019	MINIMUM FLOW TO SUPPRESSION POOL VALVE	5	6
E51-F022	TEST BYPASS TO CONDENSATE STORAGE TANK VALVE	5,11	6
E51-F031	PUMP SUCTION FROM SUPPRESSION POOL VALVE	5	6
E51-F045	STEAM TO TURBINE VALVE	5	6
E51-F046	RCIC TURBINE COOLING WATER SUPPLY VALVE	5	6
E51-F063	STEAM SUPPLY LINE ISOLATION VALVE (INBOARD)	4	6
E51-F065	TURBINE EXHAUST TO SUPPRESSION POOL VALVE		6
E51-F069	VACUUM PUMP DISCHARGE TO SUPPRESSION POOL VALVE		6
-◈-	TRIP THROTTLE VALVE	5,11	6,12
E51-F064	RHR CONDENSATE HX STEAMLINE ISOLATION VALVE(OUTBOARD)	4,11	6
E12-F067B	STEAMLINE ISOLATION VALVE	4,5	8
E12-F023	RHR REACTOR HEAD SPRAY ISOLATION VALVE	4,5,11	4
E51-F080	VACUUM BREAKER ISOLATION VALVE (OUTBOARD)	4,5	5
E51-F066	VACUUM BREAKER ISOLATION VALVE (INBOARD)	4,5	5
E12-F064B	PUMP MINIMUM FLOW BYPASS VALVE	16	8
E12-F003A	HEAT EXCHANGER SHELL SIDE OUTLET VALVE	1,5,11	8
E12-F004A	RHR PUMP "A" SUCTION VALVE	13	8
E12-F016A	CONTAINMENT SPRAY ISOLATION VALVE	5,13	8
E12-F024A	TEST RETURN VALVE	5,11,13	8
E12-F027A	CONTAINMENT SPRAY VALVE	5,13	8
E12-F042A	RHR INJECTION VALVE	5,13	8
E12-F047A	HEAT EXCHANGER SHELL SIDE INLET VALVE	13	8
E12-F048A	HEAT EXCHANGER SHELL SIDE BYPASS VALVE	5,13	8
E12-F068A	SHUTDOWN COOLING VALVE	5,13	4
E12-F068A	HX SERVICE WATER DISCHARGE VALVE	13	8
E12-F064A	PUMP MINIMUM FLOW BYPASS VALVE	13	8

LEGEND
RSP ..... REMOTE SHUTDOWN PANEL OR ARSP
RSTS ..... REMOTE SHUTDOWN TRANSFER SWITCH OR ARSTS
⊕ ..... SWITCHGEAR DEVICE FUNCTION NUMBER ANSI SPEC. C37.2
RSCS ..... REMOTE SHUTDOWN CONTROL SWITCH OR ARSCS
-◈- ..... SUPPLIED WITH TURBINE
ARSP ..... ALTERNATE REMOTE SHUTDOWN PANEL E-CP-ARS
ARSTS ..... ALTERNATE REMOTE SHUTDOWN TRANSFER SWITCH
ARSCS ..... ALTERNATE REMOTE SHUTDOWN CONTROL SWITCH

NOTES:
1. THIS FCD SHOWS ONLY THE PORTIONS APPLICABLE TO REMOTE SHUTDOWN SYSTEM. OTHER SYSTEM LOGICS ARE SHOWN TO THE EXTENT NECESSARY TO UNDERSTAND THE REMOTE SHUTDOWN LOGIC.
2. FOR DETAILED SYSTEM LOGIC SEE APPLICABLE SUPPLEMENTAL DOCUMENTS.
3. FIGURE 1 SHOWS TYPICAL VALVE CONTROL. SEE TABLE I FOR APPLICABLE VALVES.
4. THIS CONTROL IS APPLICABLE FOR ISOLATION VALVES ONLY.
5. THIS CONTROL IS APPLICABLE FOR VALVES WITH AUTOMATIC CONTROL.
6. ALL POWER FOR OPERATION OF DC VALVE MOTORS SHALL ORIGINATE FROM PLANT DC POWER. AC MOTOR OPERATED VALVES SHALL BE FED FROM STANDBY AC BUS.
7. REMOTE SHUTDOWN TRANSFER SWITCHES ARE 2 POSITION SWITCH "NORMAL" - "EMERGENCY" MAINTAINED CONTACT DURING NORMAL PLANT OPERATION ALL TRANSFER SWITCHES ARE IN "NORMAL" POSITION EXCEPT FOR E-SHD-ARSTSW WHICH IS IN "EMERGENCY" POSITION. E-SHD-RHR-ARSTS IS IN THE "OPEN" POSITION AND E-SHD-RHR-ARSTS IS IN THE "CLOSE" POSITION
8. DURING REMOTE SHUTDOWN OPERATION THE NORMAL CONTROL POWER SUPPLY SHALL BE DISCONNECTED AND THEN CONNECTED TO AN UNINTERRUPTED CONTROL POWER SUPPLY AT THE REMOTE SHUTDOWN PANEL.
9. ELECTRICAL SEPARATION SHALL BE IN ACCORDANCE WITH SUPPL. DOC. 10.
10. SEE APPLICABLE SUPPL. DOC. FCD FOR CONTROL SWITCH TYPE.
11. VALVE SEAL-IN NOT REQUIRED FOR THROTTLING TYPE VALVES.
12. TURBINE TRIP SOLENOID, WHEN ENERGIZED, AUTOMATICALLY CLOSES TRIP AND THROTTLE VALVE (SEE FIG. 1, TABLE 1) TO TRIP THE TURBINE.
13. THE CONTROL AND TRANSFER SWITCHES THAT ARE REQUIRED FOR REMOTE SHUTDOWN OPERATION OF THESE COMPONENTS ARE LOCATED IN THE ALTERNATE REMOTE SHUTDOWN PANEL.
14. THE PHYSICAL WIRING ARRANGEMENT OF THE NON TORQUE AND LIMIT SWITCHES SHALL BE MAINTAINED TO THE POSITIVE CONFIGURATION TO PROTECT THE APPENDIX "R" SAFETY FUNCTION FROM A "HOT SHORT" IN THE MAIN CONTROL ROOM. ANY ALTERATIONS MUST BE APPROVED BY THE APPENDIX "R" COGNIZANT ENGINEER. (SEE EN-DC-18)

SUPPLEMENTAL DOCUMENTS UNDER THE FOLLOWING IDENTITIES ARE TO BE USED IN CONJUNCTION WITH THIS DOCUMENT.

MPL NO. :
1. C61-1010 - - - REMOTE SHUTDOWN SYSTEM ISD.
2. C61-4010 - - - REMOTE SHUTDOWN SYSTEM DESIGN SPEC.
3. B22-1010 - - - NUCLEAR BOILER SYSTEM P&ID.
4. B22-1030 - - - NUCLEAR BOILER SYSTEM FCD.
5. E51-1010 - - - RCIC SYSTEM P&ID.
6. E51-1030 - - - RCIC SYSTEM FCD.
7. E12-1010 - - - RESIDUAL HEAT REMOVAL SYSTEM P&ID.
8. E12-1030 - - - RESIDUAL HEAT REMOVAL SYSTEM FCD.
9. A42-1030 - - - LOGIC SYMBOLS.
10. A62-4050 - - - ELECTRICAL EQUIPMENT SEPARATION FOR SAFEGUARD SYSTEM.
11. B35-1030 - - - RECIRC SYSTEM FCD.
12. VPF-3622-18-1 - VPF-2767-14-3 RCIC TURBINE CONTROL SYS & ELECTRICAL WIRING.

Columbia Generating Station
Final Safety Analysis Report

Remote Shutdown System

Draw. No. 02C61-05,2,1 | Rev. 6 | Figure 7.4-6.1

GENERAL ELECTRIC 762E280AD REV F

FILE FCD

REMOTE SHUTDOWN SYSTEM

PUMP STOPPED — AUX CONT 72* — MCC
PUMP RUNNING — AUX CONT 72* — MCC
PUMP STOPPED — AUX CONT 52* — SWGR
PUMP RUNNING — AUX CONT 52* — SWGR
REMOTE SHUTDOWN FLOW INDICATOR CONTROLLER AUTO-MANUAL STATION — FIC R001 — RSP
RCIC TURBINE NORMAL CONTROL — CONT LOGIC — CR
RCIC TURBINE TRIP VALVE LOGIC — CONT LOGIC — CR — SUPPL DOC 6

REMOTE SHUTDOWN TRANSFER SWITCH IN "NORMAL" POSITION — RSTS — RSP — NOTE 7
REMOTE SHUTDOWN TRANSFER SWITCH IN "EMERGENCY" POSITION — RSTS — B-1
REMOTE SHUTDOWN TRANSFER SWITCH IN "EMERGENCY" POSITION — RSTS — B-1
REMOTE SHUTDOWN TRANSFER SWITCH IN "NORMAL" POSITION — RSTS — B-1
REMOTE SHUTDOWN TRANSFER SWITCH IN "NORMAL" POSITION — RSTS — RSP — NOTE 7
REMOTE SHUTDOWN TRANSFER SWITCH IN "EMERGENCY" POSITION — RSTS — B-5
REMOTE SHUTDOWN TRANSFER SWITCH IN "EMERGENCY" POSITION — RSTS — B-5
REMOTE SHUTDOWN TRANSFER SWITCH IN "NORMAL" POSITION — RSTS — B-5
REMOTE SHUTDOWN TRANSFER SWITCH IN "EMERGENCY" POSITION — RSTS — RSP — NOTE 7
REMOTE SHUTDOWN TRANSFER SWITCH IN "NORMAL" POSITION — RSTS — B-10
REMOTE SHUTDOWN TRANSFER SWITCH IN "NORMAL" POSITION — RSTS — RSP — NOTE 7

ELECTRIC TURBINE GOVERNOR CONTROLLER — AUX DEVICE
TURBINE SPEED CONTROL — SUPPL DOC 6&12 (NOTE 1)
TURBINE STOP SOLENOID — AUX DEVICE
TURBINE TRIP RESET — SUPPL DOC 6&12 (NOTE 1&12)

BAROMETRIC CONDENSER VACUUM TANK CONDENSATE (TYPICAL FOR BAROMETRIC CONDENSER VACUUM PUMP)

RHR PUMP E12-C002B — SUPPL DOC 8

762E280AD REV F

REMOTE SHUTDOWN NUCLEAR BOILER SYSTEM — STATION BATTERY "B"

2 POSITION SWITCH "OPEN" "CLOSE" MAINTAINED CONTACT
REMOTE SHUTDOWN CONTROL SWITCH IN "OPEN" POSITION — RSCS — RSP
REMOTE SHUTDOWN TRANSFER SWITCH IN "EMERGENCY" POSITION — RSTS — RSP — NOTE 7
3 POSITION SWITCH "OPEN" "AUTO" "OFF" MAINTAINED CONTACT
CONTROL SWITCH IN "OPEN" POSITION — RMS — CR
ADS FUNCTION — REF SUPPL DOC 4
REMOTE SHUTDOWN TRANSFER SWITCH IN "NORMAL" POSITION — RSTS — E-1
AUXILIARY RELAY — AUX DEVICE — CR
B22-F013G : C1747
B22-F013R : C1746
B22-F013M : C1745
INSTRUMENT AIR
EXHAUST
PERMISSIVE WHEN SOLENOID IS ENERGIZED — ENERGIZE SOLENOID PILOT VALVE — SOL — LOCAL — PERMISSIVE WHEN SOLENOID IS DE-ENERGIZED
SOLENOID ENERGIZED VALVE OPENS — SUPPLY DOC 3 — LOCAL

SAFETY / RELIEF VALVE SOLENOID B, B22-F013G
TYPICAL FOR B22-F013R AND B22-F013M (SUPPL DOC 4)

3 POSITION SWITCH "START" "AUTO" "STOP" SPRING RETURN TO "AUTO" FROM "STOP" OR "START"
CONTROL SWITCH IN "START" POSITION — RMS — CR
2 POSITION SWITCH "START" "STOP" MAINTAINED CONTACT
REMOTE SHUTDOWN CONTROL SWITCH IN "START" POSITION — RSCS — RSP
AUTOMATIC START SIGNAL — CONT LOGIC — CR — SUPPL DOC 8
PERMISSIVE WHEN STOP SIGNAL NOT PRESENT — AUX DEVICE — CR
CONTROL SWITCH IN STOP POSITION — RMS — O-7
AUTOMATIC STOP SIGNAL — CONT LOGIC — CR
REMOTE SHUTDOWN CONTROL SWITCH IN "STOP" POSITION — RSCS — F-8
REMOTE SHUTDOWN TRANSFER SWITCH IN "EMERGENCY" POSITION — RSTS — RSP — NOTE 7
REMOTE SHUTDOWN TRANSFER SWITCH IN "NORMAL" POSITION — RSTS — F-5
REMOTE SHUTDOWN TRANSFER SWITCH IN "NORMAL" POSITION — RSTS — F-6
REMOTE SHUTDOWN TRANSFER SWITCH IN "EMERGENCY" POSITION — RSTS — F-6
START — STOP
AIR CIRCUIT BREAKER 52*
PUMP E12-C002B
SUPPL DOC 8

TURBINE TRIPPED — LS — SUPPL DOC 6
GOVERNOR END BEARING OIL TEMP HIGH — TS — SUPPL DOC 6
COUPLING END BEARING OIL TEMP HIGH — TS — SUPPL DOC 6
RCIC TURBINE BEARING OIL LOW PRESSURE — PS — SUPPL DOC 6
PERMISSIVE AFTER TIME DELAY — LOGIC — CR — SUPPL DOC 6
REMOTE SHUTDOWN TRANSFER SWITCH IN "NORMAL" POSITION — RSTS — RSP — H — CR
REMOTE SHUTDOWN TRANSFER SWITCH IN "EMERGENCY" POSITION — RSTS — RSP — A — RSP

2 POSITION SWITCH "OPEN" "CLOSE" MAINTAINED CONTACT
ALTERNATE REMOTE SHUTDOWN CONTROL SWITCH IN "OPEN" POSITION — ARSCS — ARSP
ALTERNATE REMOTE SHUTDOWN TRANSFER SWITCH IN "EMERGENCY" POSITION — ARSTS — ARSP — NOTE 7
INSTRUMENT AIR

REMOTE SHUTDOWN NUCLEAR BOILER SYSTEM — STATION BATTERY "A"

CONTROL SWITCH IN "OPEN" POSITION — RMS — CR
3 POSITION SWITCH "OPEN" "AUTO" "OFF" MAINTAINED CONTACT
ADS FUNCTION — REF SUPPL DOC 4
ALTERNATE REMOTE SHUTDOWN TRANSFER SWITCH IN "NORMAL" POSITION — ARSTS — E-1
AUXILIARY RELAY — AUX DEVICE — CR
B22-F013N : C1744
B22-F013U : C1748
B22-F013V : C1749
EXHAUST
PERMISSIVE WHEN SOLENOID IS ENERGIZED — ENERGIZE SOLENOID PILOT VALVE — SOL — LOCAL — PERMISSIVE WHEN SOLENOID IS DE-ENERGIZED
SOLENOID ENERGIZED VALVE OPENS — SUPPLY DOC 8 — LOCAL

SAFETY/RELIEF VALVE SOLENOID A, B22-F013N
TYPICAL FOR B22-F013U AND B22-F013V (SUPPL DOC 4)

Columbia Generating Station Final Safety Analysis Report	Remote Shutdown System		
	Draw. No. 02C61-05,2,2	Rev. 4	Figure 7.4-6.2

7.5 SAFETY-RELATED DISPLAY INSTRUMENTATION

7.5.1 SUMMARY DESCRIPTION

7.5.1.1 General

This section describes the instrumentation that provides information to the operator to enable him to assess the status of safety-related systems and the need to perform required safety functions including a discussion of conformance to Regulatory Guide 1.97.

The safety-related display instrumentation is listed in Table 7.5-1. It tabulates equipment identified on the various figures located in Sections 7.2, 7.3, 7.4, and 7.6.

The instrumentation and ranges shown in Table 7.5-1 are selected on the basis of giving the reactor operator the necessary information to perform normal plant operations and yet the capability to track process variables pertinent to safety following design-basis accidents (DBAs).

The following information is provided to the control room operator to monitor reactor conditions and allow assessment of safety system status following a DBA.

The power sources to the instrumentation described in this section originate from the Division 1, Division 2, or Division 3 safety-related emergency ac and/or dc buses unless indicated otherwise.

7.5.1.1.1 Reactor Water Level

Two divisionally separated ranges of water level instrumentation are provided: wide range and fuel range.

Wide range water level is sensed by two divisionally separated differential pressure transmitters. The signals are displayed in the control room on two recorders. Wide range instruments cover the level from +60 in. to -150 in.

Fuel range water level overlaps the wide range to provide water level in the actual core region. Level is sensed by two divisionally separated differential pressure transmitters. The level is displayed in the control room on a recorder and an indicator. The fuel range covers from -310 in. to -110 in.

The two ranges provide continuous level indication from 60 in. above the bottom of the dryer skirt to 150 in. below the top of the active fuel. Both ranges have a common zero reference point located 527.5 in. above the inside bottom of the reactor vessel.

In addition to the wide range and fuel zone range, the following are provided.

Upset range water level is sensed by a single channel to monitor from 0 in. to 180 in. and is recorded in the control room.

Shutdown range water level is sensed by a single channel to monitor from 0 in. to +400 in. and is indicated in the control room.

The combination of all fourranges monitor from just below the bottom of the active fuel to the top of the reactor head, a total span of -310 in. to +400 in.

In response to NRC Bulletin 93-03 a continuous backfill capability was added for the reactor pressure vessel (RPV) level reference legs to ensure the level instrumentation system design is of high functional reliability for long-term operation by minimizing the transport of dissolved noncondensable gas down the reference legs. The control rod drive (CRD) system is the source of backfill water as described in Section 4.6.1.

7.5.1.1.2 Reactor Pressure

Reactor pressure is sensed by two divisionally separated pressure transmitters. These pressure transmitters are recorded in the control room.

7.5.1.2 Reactor Shutdown Indication

The following information is provided to the control room operator to monitor reactor shutdown.

a. Control rod status lamps indicating each rod fully inserted. Power is supplied from a highly reliable non-Class 1E uninterruptible power supply (UPS) system;

b. Control rod scram pilot valve position status lamps indicating open valves;

c. Neutron monitoring power range channels and recorders downscale. The power sources are from reactor protection system (RPS) motor-generator (MG) sets;

d. Source range neutron monitoring channels and recorders on scale. When fully withdrawn from the core, the range covered is approximately 10% to 10^{-3}% power. When fully inserted, the range is 10^{-3}% to -10^{-7}% power;

e. Annunciators for RPS variables and trip logic in the tripped state. Power is supplied from a Class 1E power source;

f. The computer work stations provide logging of trips and control rod position log and provides thermal hydraulic information to the operator which is used to

keep the plant operating within Technical Specifications limits. Power is supplied by a non-Class 1E UPS power source; and

g. Reactor water sample analysis to determine soluble boron concentration via the postaccident sample station.

7.5.1.3 Primary Containment and Reactor Vessel Isolation Indication

The following information is provided to the control room operator to monitor the integrity of the primary containment.

a. Power operated primary containment isolation valve (excluding check valves) position indication is displayed (valve position indicating lamps) at valve controls in the control room which are Class 1E and is also displayed by a non-Class 1E transient data acquisition system (TDAS) (see Section 7.7). The non-Class 1E RPS MG sets provide an acceptable power supply in conjunction with the independently powered TDAS display. Although the hardened containment vent primary containment isolation valves are power operated, their function is to operate in a beyond-design-basis event. Position indication is provided at the controls in the control room. These valves are spring closed with the operating pneumatics isolated and locked requiring a manual action to place in service and therefore, are not powered from a Class 1 E supply.

b. Main steam line flow indication;

c. Annunciators for the primary containment and reactor vessel isolation system variables and trip logic in the tripped state. Power is supplied by Class 1E power; and

d. Process computer logging of trips. Power is from a non-Class 1E UPS power supply.

7.5.1.4 Emergency Core Cooling System and Reactor Core Isolation Cooling Indication

The following information is provided to the control room operator to monitor emergency core cooling system (ECCS) and reactor core isolation cooling (RCIC) system status.

a. Annunciators for high-pressure core spray (HPCS), low-pressure core spray (LPCS), residual heat removal (RHR), automatic depressurization system (ADS), and RCIC sensor initiation logic trips;

b. Flow and/or pressure indications for each ECCS and RCIC are provided;

c. ECCS and RCIC valve position indication;

d. Process computer logging of trips in the ECCS and RCIC. Power is provided from the UPS, a highly reliable non-Class 1E power supply;

e. Transient data acquisition system display of RCIC and ECCS functions. Power is provided from the UPS, a highly reliable non-Class 1E power supply; and

f. Main steam safety/relief valve (SRV) position indication.

7.5.1.5 Containment Indications

The following information is provided to the control room operator to monitor primary containment status.

7.5.1.5.1 Primary Containment Pressure Monitoring

There are two divisions of drywell pressure monitoring instruments. Each division consists of three monitoring ranges. The narrow range is -5 to +3 psig; the intermediate range is 0 to 25 psig; and the high range is 0 to 180 psig. Each range is recorded and the narrow range is indicated in the control room.

7.5.1.5.2 Primary Containment Temperature

Containment temperature is monitored continuously by a recorder in the control room. Points of measurement are as follows:

Points	Description
4*	Air inlet vicinity recirculation pump motors
5*	Fan coil inlets
5	Fan coil outlets
3*	RPV head flange area
6	Sacrificial shield annulus
3	CRD area

* Some of these points are summed to provide average drywell temperature information during normal operation and postaccident conditions.

2	RPV head area
5	SRV area
3*	Fan coil inlet minus annulus air
5	Upper drywell area return ducts
5	Miscellaneous areas
2	Suppression chamber air temperature
2	Suppression pool water temperature

Drywell average temperature and suppression chamber air temperature are recorded in the control room. Indication from all points is also available.

7.5.1.5.3 Primary Containment Radiation

The atmosphere of the primary containment is monitored for low levels (leak detection) and high levels [loss-of-coolant accident (LOCA)] of radioactivity and recorded in the control room on two redundant recorders.

The leak detection monitoring system consists of two identical divisionally separated offline samplers with racks located in the reactor building sample rooms. Each sample rack has a two-channel unit containing a particulate and a noble gas scintillation detector. The detectors are of high sensitivity to detect the presence or increase of radioactivity in the atmosphere indicating small leaks in the reactor coolant pressure boundary (RCPB). The output signals from the detectors are sent to panels in the main control room, which contain count ratemeters, recorders, and controls.

An air sample is piped from the containment atmosphere to the local leak detector racks and returned to containment. The control room operator has complete control of the operation and checking of the monitor system from the main control room. The leak detection channels described above are isolated when a LOCA occurs because they would rapidly be saturated by the high levels of radioactivity.

The LOCA detection system provides a means to detect a rupture of the RCPB which has released large amounts of radioactive material into primary containment. The LOCA detection system consists of two divisionally separated redundant systems. Each system contains an

* Some of these points are summed to provide average drywell temperature information during normal operation and postaccident conditions.

ionization chamber type detector located inside the primary containment. The LOCA monitors provide signals to panels in the main control room, which contain count ratemeters and recorders.

7.5.1.5.4 Primary Containment Hydrogen and Oxygen Concentration

Atmosphere samples from a minimum of two locations inside the primary containment and one location in the suppression chamber are sequentially monitored for hydrogen and oxygen percentage levels by each of two redundant analyzer systems (see Figure 9.4-8).

Each gas analyzer system contains a hydrogen and an oxygen sensor with calibrated resistance temperature detectors (RTDs) and pressure transducers that allow a microprocessor in the H_2-O_2 analyzer system to automatically compensate the measured H_2 or O_2 concentrations for changes in temperature and pressure. The microprocessor provides for periodic calibration of the analyzers. All gases are pumped back to the primary containment at all times.

The analyzers are single range, i.e., 0 to 30% hydrogen and 0 to 30% oxygen. The output signal from each analyzer is sent to a recorder in the main control room. Two redundant (divisional) recorders are provided. Each analyzer has three adjustable alarm contacts which annunciate abnormal conditions (Hi H_2, Hi O_2, and Hi Hi O_2) in the main control room.

7.5.1.5.5 Suppression Chamber Pressure

Suppression chamber pressure is recorded in the control room from two separate pressure transmitter systems. Range of recording is from 0 to 100 psig.

7.5.1.5.6 Suppression Pool Temperature Monitoring

Postaccident suppression pool temperature data is provided by four thermocouples, one per wetwell quadrant, which feed signals to a summer via millivolt to current converters (MV/Is). The average suppression pool temperature is then recorded and displayed in the control room. Backup thermocouples are available for use in the monitoring scheme. See Section 7.6.1.7 for additional information.

7.5.1.5.7 Suppression Pool Water Level Monitoring

Both wide range and narrow range suppression pool water level are monitored by two sets of redundant Class 1E sensors. Each sensor consists of one level transmitter which provides a signal to a recorder in the control room. The range of these sensors is $\pm$25 in. from normal water level in the pool for the narrow range and 2 ft to 52 ft for the wide range.

7.5.1.6 Monitoring for Radioactive Release to the Environment

7.5.1.6.1 Building Effluent Gas Monitors

The effluent activity from the reactor building ventilation exhaust, the condenser offgas system, the condenser vacuum pump system, and the standby gas treatment system (SGTS) is monitored by using an offline monitoring and sampling system. This system is described in Section 11.5.2.2.1.5. Both the postaccident and normal operational data are recorded in the control room and trended via computer work stations. The turbine building effluent release path is monitored using an isokinetic system. A sample is withdrawn from the duct through an array of isokinetic nozzles then through particulate and charcoal filters and into a low range and high range set of gas detectors. Each of these effluent stacks or ducts have a continuous vent flow rate monitoring system as described in Section 7.5.2.2.3. As described in Sections 11.5.2.2.1.5 and 11.5.2.2.1.6, signals from these radiation detectors are sent to a ratemeter and recorder located in the control room. Similar systems are installed to monitor the radwaste building ventilation release path as described in Section 11.5.2.2.1.7, except that flow rate monitoring is available on computer work stations rather than on a separate flow recorder. Even though flow monitoring is Category 2 which requires environmental qualification, TDAS is not environmentally qualified. However, TDAS is located in the main control room (a mild environment) and is designed for this service environment. If TDAS is unavailable, radwaste building effluent flow will be determined in accordance with the ODCM.

7.5.1.6.2 Meteorological Conditions

The wind speed, wind directions, and stratified atmospheric temperature information is sensed by the meteorological tower primary and backup instrumentation and is recorded in the control room. Indicated meteorological conditions are used to calculate doses downwind due to a radiation release. Wind speed and direction is monitored by separate channels at the 33 ft and 245 ft elevations. Primary and backup channels provide the air temperature difference between 33 ft and 245 ft elevations.

7.5.1.7 Radiation Exposure (Postaccident) (See Section 12.3.4.2)

High range area radiation monitors are located inside the reactor building to monitor the exposure rates at entry points to that building following an accident. These also serve to provide indication of any radioactive releases into the reactor building from the primary containment and provide trend monitoring during accident conditions. Signals from the detectors are recorded in the control room.

7.5.1.8 Postaccident Sampling System

The postaccident sampling system provides a means for obtaining grab samples of highly radioactive liquid samples of primary coolant directly from the reactor vessel, the RHR loops, or the suppression pool and atmospheric samples of the drywell, wetwell, and reactor building. All samples may be transported for analysis in the onsite or offsite facilities.

7.5.1.9 Primary System Relief Valve Position Indication

Two methods are available to monitor SRV position in the main control room:

a. Direct indication: Uses linear variable differential transformers (LVDTs) mounted directly on the relief valves. These sensors generate a voltage signal proportional to valve lift which is processed to provide an OPEN/CLOSED indication and annunciation; and

b. Tail pipe thermocouples: Uses thermocouples attached to the SRV tailpipes which monitor the temperature rise in the piping resulting from open or leaking relief valves. These signals are recorded and annunciated.

7.5.1.10 Power Supply Status Monitoring

Voltage indication for standby power buses of 4160-V ac and 480-V ac switchgear are provided in the control room. Voltage and amperage indication is also provided for batteries, battery chargers, inverters, and dc and UPS buses.

7.5.1.11 Primary Water Source Indication

The amount of feedwater flow to the reactor is detected by flow transmitters located on the feedwater lines. The flow rate is recorded in the control room. The reserve of water available in the condensate storage tanks is monitored and transmitted to the control room for operator information.

7.5.1.12 Residual Heat Removal System

Residual heat removal system loops A and B may function in several different modes. The flow for each of these modes, except for the reactor vessel head spray, is indicated by a single flow meter for each loop. The flow rate for each mode is determined by observing both indicated flow and valve position. The head spray has its own individual flow meter. All flow information is displayed in the control room.

Residual heat removal system loop C functions only in one mode. The flow rate for this mode is also displayed in the control room.

Heat from the RHR loops A and B is removed via heat exchangers. The outlet temperature of the heat exchangers is recorded in the control room.

7.5.1.13 Standby Liquid Control System

The standby liquid control (SLC) system flow into the reactor is monitored and displayed in the control room. Additionally, the SLC system tank level is displayed in the control room as a backup indication to the flow.

7.5.1.14 (DELETED)

7.5.1.15 High Levels in Radioactive Liquid Tanks

Each tank used to hold or collect radioactive liquids is equipped with a level indicating system. The level is recorded on local panels in the radwaste building.

7.5.1.16 Emergency Ventilation Damper Position Indication

Damper position indication is provided in the control room for all dampers necessary to prevent release of radioactive gases to the environment or for the protection of operating personnel during accident conditions.

7.5.1.17 Standby Service Water System

Flow rate in each loop is detected by a flow transmitter providing signals to indicators in the control room. The spray pond temperature is indicated in the control room. The spray pond provides the source of cooling water to engineered safety feature (ESF) components.

7.5.1.18 Spent Fuel Pool Cooling System

The temperature of the spent fuel pool is monitored by instrumentation that provides indication and hi-alarms in the control room.

7.5.1.19 Main Control Room Heating, Ventilating, and Air Conditioning

Redundant temperature indications are provided in the control room to monitor control room temperature.

7.5.1.20 Standby Gas Treatment System

Each division of the SGTS is provided with loop flow indication in the control room.

7.5.1.21 Containment Instrument Air

Each division of the containment instrument air (CIA), the common header and both ADS main steam relief valve trains, provides system line pressure indication in the control room. The sequence programmers for the backup nitrogen bottles on each train provide annunciator signals to the control room when the last bottles are connected to the train manifolds.

7.5.1.22 Safety Parameter Display

7.5.1.22.1 Description

The safety parameter display system (SPDS) design is based on the emergency response information system (ERIS) concept developed by the BWR Owner's Group. The ERIS control room information requirements are defined as a minimum by the Emergency Procedures Guidelines (EPG).

The purpose of the SPDS is to assist control room personnel in making quick assessments of plant safety status. The functional criteria for the SPDS are described in NUREG-0696. These requirements are satisfied using human engineered hard-wired control room instrumentation. Additional support information that is useful for emergency response is supplied by the Graphic Display System (GDS). The displays provide information related to the following plant functions:

a. Reactivity control,
b. Reactor core cooling and heat removal,
c. Reactor coolant system integrity,
d. Radioactivity control, and
e. Containment integrity.

7.5.1.22.2 Conformance to NUREG-0696

The overall SPDS design consists of two display systems. The human engineered hard wired control room instrumentation needed to comply with Regulatory Guide 1.97 is the primary source of plant safety status. These displays are Class 1E and sufficiently concentrated to allow rapid safety assessment. (Additional information is contained in Appendix B, TMI Item I.D.1.)

The hard-wired control room displays afford continuous parameter status indication. Real time validation of critical parameters is accomplished by comparison of signals from redundant divisions. Operating procedures and operator training provide guidance resolution of unsuccessful data validation. Recorders indicate magnitude and trend of important parameters, and alarms provide audible notification of an unsafe operating condition. Redundant

divisionally separate instrumentation provided for critical parameters ensures a very high degree of reliability during both plant operation and cold shutdown.

Additional support information is supplied by the GDS. The GDS consists of high performance human factored HMI displays of critical plant functions. The GDS and Class 1E equipment are adequately isolated to meet IEEE 279-1974. Data is collected and processed by the control room real time data acquisition systems (see Section 7.7.1.15). Processed data of critical parameters is subsequently formatted and available for display in the control room automatically or on request.

The HMI display of critical parameters is a dedicated function with formatted displays capable of indicating approaches to off normal conditions for critical plant parameters. Control room displays are available on a separate HMI on an "ON DEMAND" or "AUTOMATIC" basis as required. Power to the data acquisition system, computer processor, and HMI displays is uninterruptible. All analysis and display hardware is located in the main control room, however, both the TSC and EOF have access to any event response aid function.

The HMI displays provide continuous indication of plant safety status. Where applicable, real time validation of each signal is accomplished by comparing redundant signals. Display formats were developed by the BWR Owners' Group based on critical parameters and the EPG. Displays are capable of showing the magnitude and trend of critical parameters and parameter vs. parameter displays needed to support EPG requirements. The hardware and software designs allow system expansion and flexibility in display formats. The use of highly reliable components ensures a very high degree of reliability.

7.5.2 ANALYSIS AND DESIGN BASIS

7.5.2.1 Design Basis

The safety-related display instrumentation is designed to provide the operator with all necessary information to assess the status of transients or accidents from their onset to a safe cold shutdown condition, to assess the status of safety-related systems used to mitigate the event, and to allow timely operator actions as necessary.

Chapter 15 identifies and evaluates events that jeopardize the fuel barrier and RCPB. The methods of assessing barrier damage and radioactive material releases, along with the methods by which abnormal events are identified, are discussed in Chapter 15.

Variables monitored are listed in Table 7.5-1. These variables have been selected using the methodology established in Regulatory Guide 1.97, NUREG-0737, and the EPG.

The safety-related display instrumentation is categorized into types in accordance with Regulatory Guide 1.97, Revision 2 or 3, and according to the primary function during a transient or accident condition. These types are as follows:

Type A Variables

Those variables to be monitored that provide the primary information required to permit the control room operator to take specific manually controlled actions for which no automatic control is provided and that are required for safety systems to accomplish their safety functions for DBA events. Primary information is information that is essential for the direct accomplishment of the specified safety functions; it does not include those variables that are associated with contingency actions that may also be identified in written procedures.

A variable included as Type A does not preclude it from being included as Type B, C, D, or E or vice versa.

Type B Variables

Those variables that provide information to indicate whether plant safety functions are being accomplished.

Type C Variables

Those variables that provide information to indicate the potential for being breached or the actual breach of the barriers to fission product releases.

Type D Variables

Those variables that provide information to indicate the operation of individual safety systems and other systems important to safety. These variables are to help the operator make appropriate decisions in using the individual systems important to safety in mitigating the consequences of an accident.

Type E Variables

Those variables to be monitored as required for use in determining the magnitude of the release of radioactive materials and continually assessing such releases.

The instruments are further divided into categories by their importance to the operator during and following an accident, and to the importance to safety of the specific measured variable. These categories are as follows:

Category 1

Category 1 provides the most stringent requirements for equipment qualification and pertains to monitoring key variables.

Category 2

Category 2 display instruments require less stringent equipment qualification and generally applies to instrumentation designed for indicating system operating status.

Category 3

Category 3 display instruments are used as backup displays for Category 1 and Category 2 and to aid in diagnosing the type of transient or accident and determining the extent of damage, if any.

7.5.2.2 Analysis

The safety-related display instrumentation provides adequate information to allow the reactor operator to perform the necessary manual safety functions and to assess plant and system status during normal operation, transients, and accident conditions.

Normal Operation

The information channel ranges were selected on the basis of giving the reactor operator the necessary information to perform all the normal plant startup, steady state maneuvers, and to be able to track all the process variables pertinent to safety.

Abnormal Transient Occurrences

The ranges of indicators and recorders provided are capable of covering the extreme of process variables and provide adequate information for all abnormal transient events.

Accident Conditions

Information readouts are designed to accommodate all credible accidents for operator actions, information, and event tracking requirements, and cover all other design basis events or incident requirements.

Postaccident monitoring instrumentation provides the operator with plant status information during and following an accident. The information is needed to follow the progress of an accident, assist the operator to safely shut down the reactor, assess the extent and type of

damage, if any, and to monitor critical parameters for extended periods of time if extensive damage has occurred.

7.5.2.2.1 Conformance To 10 CFR 50 Appendix A, General Design Criteria

The following is a discussion of conformance to those General Design Criteria (GDC) that apply specifically to the safety-related display instrumentation. See Section 7.1.2.2 for a discussion of GDC which apply equally to all safety-related systems.

GDC 13, Instrumentation and Control

Instrumentation is provided to monitor variables and systems over their anticipated ranges for accident conditions as appropriate to ensure adequate safety.

GDC 19, Control Room

The safety-related instrumentation meets the requirements that a control room be provided from which actions can be taken to maintain the nuclear power unit in a safe condition under accident conditions, including LOCAs, and that equipment, including the necessary instrumentation, at appropriate locations outside the control room be provided with a design capability for prompt hot shutdown of the reactor.

GDC 64, Monitoring Radioactivity Releases

The safety-related instrumentation includes the capability of monitoring the reactor containment atmosphere, spaces containing components for recirculation of LOCA fluid, effluent discharge paths, and the plant environs for radioactivity that may be released from postulated accidents.

7.5.2.2.2 Conformance To IEEE Standards

The following is a discussion of conformance to those IEEE Standards which apply specifically to the safety-related display instrumentation. See Section 7.1.2.3 for a discussion of IEEE Standards which apply equally to all safety-related systems.

7.5.2.2.2.1 IEEE Standard 279-1971, Criteria for Protection Systems for Nuclear Power Generating Stations. The safety-related display instrumentation is part of the protection systems and provides information to the reactor operator during and after accident conditions, allowing assessment of reactor status, safety system status, and allowing the operator to control safety systems when necessary.

General Functional Requirements (IEEE 279-1971, paragraph 4.1)

The safety-related display instrumentation, in addition to providing the reactor operator the necessary information to perform normal plant operations, also provides information that allows assessment of plant and safety system status during and after transients and DBAs.

Single Failure Criterion (IEEE 279-1971, paragraph 4.2)

The safety-related display instrumentation that is recommended by Regulatory Guide 1.97, Revision 2, to be redundant is designed to meet the single failure criterion.

Quality of Components and Modules (IEEE 279-1971, paragraph 4.3)

For a discussion of the quality classifications and qualification of components and modules see Sections 3.2, 3.10, and 3.11.

Equipment Qualification (IEEE 279-1971, paragraph 4.4)

For a discussion of equipment qualification see Sections 7.5.2.2.2.2 (IEEE 323-1974), 3.10, 3.11, and 1.8.3 for conformance.

Channel Integrity (IEEE 279-1971, paragraph 4.5)

The safety-related display instrumentation is designed to provide information to the reactor operator under extreme conditions. See Sections 3.10, 3.11, 8.2.1, and 8.3.1.

Channel Independence (IEEE 279-1971, paragraph 4.6)

Safety-related display instrumentation independence is maintained through the application of separation criteria as described in Section 8.3.1.4.

Control and Protection System Interaction (IEEE 279-1971, paragraph 4.7)

There is no interaction between control systems and that safety-related display instrumentation which is part of the protection system.

Derivation of System Inputs (IEEE 279-1971, paragraph 4.8)

The safety-related display instrumentation, where feasible and practical, is a direct measure of the desired variable.

Capability for Sensor Checks (IEEE 279-1971, paragraph 4.9)

The safety-related display instrumentation input sensors can be either perturbed, inputs substituted, or cross checked for proper operability. See Regulatory Guide 1.22 compliance in each of the sections in this chapter for a discussion of sensor check capability.

Capability for Test and Calibration (IEEE 279-1971, paragraph 4.10)

See the compliance discussion of Regulatory Guide 1.22 in each section of this chapter.

Channel Bypass or Removal from Operation (IEEE 279-1971, paragraph 4.11)

Removal from service of sensors which provide inputs to the safety-related display instrumentation is discussed in the respective system discussions in this chapter on compliance to IEEE 279.

Operating Bypasses (IEEE 279-1971, paragraph 4.12)

This paragraph does not apply as the safety-related display instrumentation does not incorporate operating bypasses.

Indication of Bypasses (IEEE 279-1971, paragraph 4.13)

This paragraph does not apply as the safety-related display instrumentation does not incorporate bypasses.

Access to Means for Bypassing (IEEE 279-1971, paragraph 4.14)

Access to instrument valves is administratively controlled. Access to other means of bypassing are located in the control room and are also under administrative control.

Multiple Setpoints (IEEE 279-1971, paragraph 4.15)

This paragraph does not apply as the safety-related display instrumentation does not incorporate multiple setpoints.

Completion of Protective Action Once it is Initiated (IEEE 279-1971, paragraph 4.16)

This paragraph does not apply as the safety-related display instrumentation does not provide protective action.

Manual Initiation (IEEE 279-1971, paragraph 4.17)

This paragraph does not apply as the safety-related display instrumentation does not provide manual initiation.

Access to Setpoint Adjustments, Calibration, and Test Points (IEEE 279-1971, paragraph 4.18)

Access to calibration adjustments are under administrative control.

Identification of Protective Actions (IEEE 279-1971, paragraph 4.19)

Certain safety-related display instrumentation is specifically designed to identify the need for operator-initiated protective actions while others only provide the reactor operator the necessary information to identify plant and safety system status.

Information Read-Out (IEEE 279-1971, paragraph 4.20)

The safety-related display instrumentation is designed to provide the operator with accurate, complete, and timely information to determine plant status and avoids anomalous indications which could confuse the reactor operator.

System Repair (IEEE 279-1971, paragraph 4.21)

The operator can identify and repair most failed sensors, recorders, or indications during plant operation. However, there are sensors such as neutron monitoring [local power range monitor (LPRM) and intermediate range monitor (IRM)] which cannot be replaced or repaired during plant operation and must be repaired or replaced during plant shutdown.

Identification (IEEE 279-1971, paragraph 4.22)

The safety-related display instrumentation is specifically identified on the control panels so that the operator can easily discern that they are intended for use under accident conditions.

7.5.2.2.2.2 IEEE Standard 323-1974, Standard for Qualifying Class 1E Equipment for Nuclear Power Generating Stations. Safety-related display instrumentation as recommended by Regulatory Guide 1.97, Revision 2. See Section 3.11 for equipment requirements based on NUREG-0588, 10 CFR 50.49, and IEEE-323.

7.5.2.2.3 Regulatory Guide Conformance

Regulatory Guide 1.32. Safety-related display instrumentation as recommended by Regulatory Guide 1.97, Revision 2, is powered from vital buses and, if necessary, with battery backup where momentary interruption is intolerable; or as noted in text discussion (see Section 7.5.1).

Regulatory Guide 1.75, Revision 1. Redundant or diverse channels are provided where necessary as recommended by Regulatory Guide 1.97, Revision 2. These channels are electrically independent and physically separated from each other as discussed in Section 8.3.

Regulatory Guide 1.89, Revision 1. Safety-related display instrumentation is qualified to Regulatory Guide 1.89, Revision 1 as recommended by Regulatory Guide 1.97, Revision 2 or Revision 3 as clarified in Section 1.8.3.

Regulatory Guide 1.100, Revision 1. Safety-related display instrumentation as recommended by Regulatory Guide 1.97, Revision 2 or Revision 3, meets the seismic qualifications requirements of IEEE-344-1975 as clarified in Section 3.10.1.2 and is purchased to the requirements in Regulatory Guide 1.100 which states that instrumentation should continue to read within the required accuracy following, but not necessarily during, a safe shutdown earthquake.

Regulatory Guide 1.97, Revision 2. Instruments meet the recommendations required by category and type as described in Revision 2 unless noted in the text discussions as meeting Revision 3 requirements.

An item by item general discussion of display instrumentation and the degree of conformance to Regulatory Guide 1.97 requirements is provided below and in Section 7.5.1.1. See Table 7.5-1 for instrument ranges, Regulatory Guide 1.97 category, and other specific information.

Neutron Flux (Table 7.5-1, item 3)

The facility operating license required the installation of a neutron flux monitoring system in the form of ex-core wide range monitors that were in conformance with the requirements of Regulatory Guide 1.97. The required wide range monitoring system was installed in 1989. Authorization to delete the license condition and remove the equipment was granted by the NRC in May 2000 (Amendment 162, Reference 7.5-4). The authorization was based on a demonstration that the wide range monitors were unnecessary because the originally installed neutron monitoring systems met the alternate criteria described in NEDO-31558 for post-accident neutron flux monitoring systems (References 7.5-1 and 7.5-3). Two exceptions to this are that the APRM system accuracy does not satisfy the NEDO-31558 requirements under all post accident conditions and that the NEDO-31558 requirement for an uninterruptible power source is not met. It was shown that alternate means are available to meet the intent of NEDO-31558 for both of these exceptions, and these alternate means were accepted by the NRC (References 7.5-3 and 7.5-4).

The installed neutron monitoring system (NMS) consists of the source range, intermediate range, and APRM/LPRM monitoring systems. The existing source range and intermediate

range detectors are powered from Class 1E power; the average power range instruments are powered from the reactor protection bus which is a highly reliable source backed up by a diesel generator. There are 43 strings of local power range detectors, 8 intermediate range detectors and 4 source range detectors. These are divided into two redundant divisions. The source and intermediate range detectors are inserted or retracted from the core by Quality Class 2 drive units; however, the drive units are supplied from reliable power supplies and failure of all drive units simultaneously is extremely remote even under accident conditions. The drive units are only required to drive the detector into the core. Any failure after insertion is inconsequential. If all drive units did fail and the source range monitors could not be inserted, the range of indicated power when withdrawn is sufficient to ensure that the reactor is subcritical since the source range instruments monitor a range of 10^{-3}% to 10% power even in the fully withdrawn position. Neutron flux level indication is provided by recorders in the control room.

In accordance with the NRC authorization described above, the ex-core wide range neutron monitoring (WRM) system has been deactivated. The two detectors located in the drywell between the reactor pressure vessel and the sacrificial shield wall and the two preamplifier assemblies located on the reactor building 522' elevation have been abandoned in place. The amplifiers, recorders, and other hardware located in the main control room have been removed. The associated electrical cables have been spared in place.

Coolant Level in the Reactor (Table 7.5-1, item 2)

Regulatory Guide 1.97 recommends that reactor level be monitored from below the core support plate to the centerline of the main steam lines by Category 1 instruments.

There are two divisionally separated ranges of level instrumentation to cover the full range of reactor water level as discussed in Section 7.5.1.1.1. Additionally, a single channel (Category 3) of “upset” range (high) level and a single channel of shutdown range indication is also provided.

RCS Soluble Boron Concentration

Regulatory Guide 1.97 recommends measurement of the soluble boron concentration in the circulating primary coolant.

Grab samples of the circulating primary coolant will be analyzed by either the onsite of offsite facilities for determination of soluble boron concentration. These facilities will have capability to analyze 0 to 1000 ppm of soluble boron concentration in RCS.

Boiling Water Reactor Core Thermocouples

Regulatory Guide 1.97 recommends the installation of in-core thermocouples.

Columbia Generating Station (CGS) concurs with LRG and BWR Owners' Group that core thermocouples do not provide adequate indication of approach to or existence of inadequate core cooling. Energy Northwest's response to Generic Letter 84-23 closed this issue.

Primary System Pressure (Table 7.5-1, item 1)

Regulatory Guide 1.97 recommends that primary system pressure be monitored from 15 psia to 1500 psig by Category 1 instruments.

Redundant Class 1E pressure indicators with a range of 0 to 1500 psig are provided.

Control Rod Position Indication (Table 7.5-1, item 39)

Regulatory Guide 1.97 recommends that Category 3 indication be provided to indicate when a rod is in or not in.

A rod position display of full-in and full-out position provides this information.

Drywell Pressure (Table 7.5-1, item 37)

Regulatory 1.97 recommends Category 1 redundant instruments covering a range from 10 psia to three times design pressure.

Redundant channels are recorded, each having three ranges, a narrow range for -5 to +3 psig, an intermediate range for 0 to 25 psig, and a high range for 0 to 180 psig.

Drywell Sump Level

Regulatory Guide recommends that the drywell sump level be measured by Category 1 instruments.

The drywell equipment and floor drain sumps drain by gravity to the reactor building equipment drain sump and reactor building floor drain sumps respectively. On a LOCA, the containment isolation valves from these drywell sumps flange lines close, isolating the sumps. Any major drywell flooding at this time will overflow these sumps and spill into the suppression pool via the downcomers.

When a LOCA isolation signal is not present the drywell sump drains to the reactor building sump where flow and sump level are continuously monitored in the control room.

Primary Containment Valve Position Indication (Table 7.5-1, item 40)

Regulatory Guide 1.97 recommends Category 1, closed-not closed indication on power operated primary containment isolation valves.

Valve position for each applicable containment isolation valve is provided at the valve controls in the control room.

Redundancy requirements are met by the two valve criteria required for containment isolation.

Radioactivity Concentration or Radiation Level in Circulating Primary Coolant

Regulatory Guide 1.97 recommends that Category 1 redundant detection systems be installed to measure this parameter. The recommended range is one-half Technical Specifications limit to 100 times Technical Specifications limit in R per hour.

There is presently no instrument available which will accomplish this task. Prior to isolation of main steam lines, the condenser offgas system and the main steam line radiation monitors will give immediate warning of fuel failure. The postaccident sampling system (see Section 11.6) provides monitoring and a measure of primary coolant activity after an accident. For details about offgas system and main steam line radiation monitors, see Section 11.5.

Analysis of Primary Coolant

Regulatory Guide 1.97 recommends provisions be made to analyze the primary coolant to determine the extent of core damage. This is a Category 3 system.

A postaccident sampling system (see Section 11.6) providing for grab samples of the primary coolant, suppression pool water, drywell atmosphere, wetwell atmosphere, and reactor building atmosphere is provided. Grab samples will be analyzed in onsite or offsite facilities. Grab samples of the reactor building equipment and floor drain sumps may also be taken with the same equipment.

Primary Containment Area Radiation (Table 7.5-1, item 8)

Regulatory Guide 1.97 recommends that the radiation levels in the primary containment be monitored by redundant Category 1 instruments.

Two detectors are located inside containment that have a range 10^0 R/hr to 10^7 R/hr. These monitors respond to gamma radiation of 60 KeV as required by Regulatory Guide 1.97 to detect the ^{133}Xe gases. These radiation monitors display on recorders located in the control room.

Suppression Pool Water Level (Table 7.5-1, item 14)

Regulatory Guide 1.97 recommends suppression pool level indication on redundant Category 1 instruments. The range (50 ft) is from below the ECCS suction to 5 ft above normal level.

Narrow and wide range instrumentation is provided as discussed in Section 7.5.1.5.

Drywell Hydrogen and Oxygen Concentrations (Table 7.5-1, items 10 and 11)

License Amendment No. 189 approved monitoring the containment hydrogen concentrations with Category 3 equipment and containment oxygen concentrations with Category 2 equipment as defined in Regulatory Guide 1.97. Ranges should be 0 to 30% for hydrogen and 0 to 10% for oxygen and the equipment capable of operating from 12 psia to design pressure.

H_2-O_2 analyzers are provided with ranges of 0 to 30% for both gases and are capable of operating from 12 psia to 45 psig. The H_2-O_2 levels are recorded in the control room.

Noble Gas Effluent Radioactivity Monitors (Table 7.5-1, item 15)

To monitor radioactive noble gases vented to the atmosphere, Regulatory Guide 1.97 recommends off-line sampling systems and radioactive gas monitoring systems on all building exhausts where releases may occur. These monitoring systems would be Category 2 with ranges from 10^{-6} $\mu Ci/cm^3$ to a high of between 10^3 and 10^5 $\mu Ci/cm^3$ depending on the release points.

The Reactor Building Elevated Release Duct monitoring system provides Type E and C, Category 2 and 3 data in units of $\mu Ci/cm^3$ via three overlapping detectors. Each detector provides signal to a channel (low, intermediate, high) on the associated recorder. A composite signal is also provided to a fourth channel on the recorder. This system is discussed in detail in Section 11.5.2.2.1.5.

Note: the previous Reactor Building Elevated Release Duct monitoring system is presently de-terminated, but is still connected to its associated Control Room recorder (see Table 7.5-1, item 15, note c for specific de-termed channels). As the system is de-terminated, any data displayed and recorded on the recorder associated with the previous system is not useable.

Radiation Exposure Rate (Table 7.5-1, item 20)

Regulatory Guide 1.97 (for Type E) recommended that area radiation detectors be provided to indicate major releases from the primary containment.

There are three detectors located at specified reactor building entry points and inside the building to provide the required coverage. They have a range of 10^{-1} to 10^4 R/hr, are Category 3 instruments, and are recorded in the control room.

These monitors provide coverage for these areas described by Regulatory Guide 1.97. Additionally, grab samples of the reactor building atmosphere may be obtained from the postaccident sample system. These high range area monitors provide coverage for personnel access and long-term surveillance (see Reactor Building or Secondary Containment Area Radiation below).

Main Feedwater Flow Rate (Table 7.5-1, item 23)

Regulatory Guide 1.97 recommends a Category 3 indicator to display the feedwater flow rate. Feedwater flow indication is provided in the control room.

Condensate Storage Tank Level (Table 7.5-1, item 24)

Regulatory Guide 1.97 recommends that the condensate storage tank levels be indicated on Category 3 instruments.

Instrumentation is provided for this parameter with display in the control room.

Suppression Chamber Pressure (Table 7.5-1, item 12)

Regulatory Guide 1.97 recommends that a Category 2 flow instrument be provided to indicate suppression pool spray flow. Suppression pool pressure is the key variable and pressure will indicate whether or not spray flow has been established. Knowing the actual amount of spray flow in gpm is of no value. However, valve position, RHR pump running indication, RHR system flow (all indicated in the control room), and suppression chamber pressure will indicate the presence or absence of spray flow. Suppression chamber pressure will also be a basis for whether or not drywell spray initiation will be required, given a high drywell pressure condition.

Suppression Pool Water Temperature (Table 7.5-1, item 13)

Regulatory Guide 1.97 recommends temperature indication of the suppression pool water. This indication would be Category 2 and have a range of 30°F to 230°F. See Section 7.6.1.7 for the CGS design.

Drywell Atmosphere Temperature (Table 7.5-1, item 7)

Regulatory Guide 1.97 recommends that the drywell atmosphere temperature be monitored with a range of 40°F to 440°F on Category 2 instruments. CGS has provided instrumentation monitoring a 50°F to 400°F range.

Postaccident drywell temperature data is provided by four thermocouples located in the drywell area. These thermocouples feed signals to a summer via MV/Is. The average drywell

temperature is then recorded and displayed in the control room. Backup thermocouples are available for use in the monitoring scheme.

Drywell Spray Flow (Table 7.5-1, item 25)

Regulatory Guide 1.97 recommends a drywell spray flow instrument capable of monitoring flow from 0 to 110% of flow. This instrument should be Category 2.

Drywell spray flow is provided by RHR pump flow indication. Valve position indication and drywell pressure will indicate proper flow path. Residual heat removal flow is indicated in the control room.

Primary System Safety/Relief Valve Position (Table 7.5-1, item 21)

Regulatory Guide 1.97 recommends monitoring the SRV position, closed or not closed, with Category 2 instruments.

Monitoring the SRV position is provided as discussed in Section 7.5.1.9.

This is also backed up by the suppression pool temperature and level instrumentation.

Reactor Core Isolation Cooling Flow Rate (Table 7.5-1, item 4)

Regulatory Guide 1.97 recommends RCIC be monitored from 0 to 110% of design flow with Category 2 instruments.

Reactor core isolation cooling pump discharge flow monitoring is provided. This, in conjunction with verification of RCIC system valve lineup, provides indication of system operability. Flow indication and valve position are displayed in the control room.

High-Pressure Core Spray Flow Rate (Table 7.5-1, item 5)

Regulatory Guide 1.97 recommends that HPCS flow be monitored from 0 to 110% of design flow with Category 2 instruments.

High-pressure core spray pump discharge flow monitoring is provided. This in conjunction with verification of HPCS system valve lineup provides indication of system operability. Flow indication and valve position are displayed in the control room.

Low-Pressure Core Injection Flow Rate (Table 7.5-1, item 25)

Regulatory Guide 1.97 recommends that low-pressure coolant injection (LPCI) flow be monitored from 0 to 110% of design flow with Category 2 instruments.

Residual heat removal (LPCI) pump discharge flow monitoring is provided. This in conjunction with verification of RHR system valve lineup provides indication of system operability. Flow indication and valve position are displayed in the control room.

Low-Pressure Core Spray Flow Rate (Table 7.5-1, item 6)

Regulatory Guide 1.97 recommends that LPCS flow be monitored from 0 to 110% of design flow with Category 2 instruments.

Low-pressure core spray pump discharge flow monitoring is provided. This, in conjunction with verification of LPCS system valve lineup, provides indication of system operability. Flow indication and valve position are displayed in the control room.

Standby Liquid Control System Flow (Table 7.5-1, item 27)

Regulatory Guide 1.97 recommends that the flow rate in the SLC system be monitored by Category 2 instruments.

Standby liquid control system flow monitoring is provided. Display is provided in the control room.

Standby Liquid Control System Tank Level (Table 7.5-1, item 28)

Regulatory Guide 1.97 recommends SLC system tank level indication be monitored by Category 2 instruments.

The SLC system tank level instruments are provided as Category 3. Level indication is provided in the control room.

Residual Heat Removal System Flow Rate (Table 7.5-1, item 25)

Regulatory Guide 1.97 recommends that RHR system flow be monitored from 0 to 110% of design flow with Category 2 instruments.

Residual heat removal pump discharge flow monitoring is provided. This in conjunction with RHR pump suction and discharge pressures and verification of RHR system valve lineup provides indication of system operability. Flow indication and valve position are displayed in the control room.

Residual Heat Removal Heat Exchanger Outlet Temperature (Table 7.5-1, item 26)

Regulatory Guide 1.97 recommends that the RHR heat exchanger outlet temperature be monitored by Category 2 instruments with a range of 32°F to 350°F.

Columbia Generating Station considers this instrumentation to be backup to RHR/service water (SW) flow indications. For this reason Category 3 (Class 1E powered) instrumentation is provided.

Existing instrumentation is not Class 1E but is adequate for monitoring this parameter. Indication is provided in the control room since other Class 1E indication of system performance such as RHR flow and standby service water flow to heat exchanger are provided.

Cooling Water Temperature to ESF System Components (Table 7.5-1, item 31)

Regulatory Guide 1.97 recommends Category 2 instruments with a range of 32°F to 200°F.

Present instruments measure water temperature of the spray pond. This is the source of water for the ESF systems. The range of these instruments is 0°F to 200°F.

Further temperature indication is provided on the outlet of each individual heat exchanger in the ESF systems. There is sufficient indication available to verify proper operation of the system.

Cooling Water Flow to ESF System Components (Table 7.5-1, items 29 and 30)

Regulatory Guide 1.97 recommends Category 2 flow instruments to monitor flow in the ESF cooling system.

The SW return lines to the spray ponds are monitored by flow transmitters providing signals to indication in the control room for service water loop A and B. The HPCS service water loop status is detected by a pressure transmitter providing a signal to an indicator in the control room.

High Radioactivity Liquid Tank Level (Table 7.5-1, item 36)

Regulatory Guide 1.97 recommends that all tanks containing radioactive liquids be provided with tank level indication (Category 3 instruments).

All tanks designed to handle radioactive liquids are equipped with remote reading tank level instruments. The indicators are located in the radwaste building which is accessible following a DBA.

Emergency Ventilation Damper Position (Table 7.5-1, item 38)

Regulatory Guide 1.97 recommends Category 2 indication for the open-closed position of emergency ventilation dampers.

The position status on all emergency ventilation dampers is displayed in the control room.

Status of Standby Power and Other Energy Sources Important to Safety (Table 7.5-1, items 16 and 22)

Regulatory Guide 1.97 recommends that status information be provided for all standby power and other energy sources such as pneumatic or hydraulic power.

Voltage indication for standby electrical buses of 4.16-kV is displayed in the control room. Additionally, all vital 480-V switchgear voltage readout is provided along with all battery, battery charger, and inverter voltage and amperage. The pneumatic pressure for the CIA is also displayed in the control room.

Reactor Building or Secondary Containment Area Radiation (Table 7.5-1, item 20)

Regulatory Guide 1.97, Revision 3 (for Type E) recommends that area radiation monitors be placed inside buildings or areas where access is required to service equipment important to safety and in the reactor building. This is to monitor for significant releases, for release assessment, and for long-term surveillance.

Three high range area monitors with a range of 10^{-1} R/hr to 10^{4} R/hr are located in the reactor building. They are located to monitor specific entry points to the building (to e1. 471 ft via door R202, e1. 501 ft via door R305, and e1. 606 ft via door R702). These are the same monitors discussed above in the item on radiation exposure rate. Portable equipment will be used whenever personnel enter a radiation area as required by entry procedures.

Airborne Particulate and Halogen Materials Released from Plant (Table 7.5-1, item 15)

Note: the previous Reactor Building Elevated Release Duct monitoring system is presently de-terminated, but is still connected to its associated Control Room recorder (see Table 7.5-1, item 15, note c for specific de-termed channels). As the system is de-terminated, any data displayed and recorded on the recorder associated with the previous system is not useable. Additionally, the replacement system no longer provides the on-line monitoring function described below. The requirement to measure and record the release of particulates and halogens into the atmosphere is now met by means of off-line sampling and laboratory analysis.

Regulatory Guide 1.97 recommends that particulates and halogens be sampled at the identified plant release points. Onsite analysis capabilities are required. This sampling equipment should be Category 3 equipment. Off-line monitoring systems with low range and intermediate detectors are provided. These systems are provided for the turbine building exhaust and the radwaste building exhaust.

Particulates and halogens, as well as noble gases, are monitored and recorded by the on-line gamma spectroscopy system for the reactor building elevated release duct.

Radiation Exposure Meters at Various Locations Around the Plant

Regulatory Guide 1.97 recommends that continuously monitoring samplers be located at various locations around the plant to assess releases from the plant.

Adequate release information is already available through ventilation release point monitoring and atmospheric conditions information available from the meteorologic conditions information center located onsite. Backup monitoring facilities are readily available on the Hanford Reservation from fixed and mobile units.

Airborne Radiohalogens and Particulates (Portable)

Regulatory Guide 1.97 recommends portable sampling with onsite analysis capability for airborne halogens and particulates.

Portable air samples and a radioanalytical laboratory are maintained by the plant health physics group capable of measuring concentrations from 10^{-9} $\mu Ci/cm^3$ to 10^{-3} $\mu Ci/cm^3$.

Plant and Environs Radiation (portable)

Regulatory Guide 1.97 recommends portable monitoring instrumentation capable of measuring gamma and beta dose rates from 10^{-3} R/hr to 10^{4} R/hr.

The plant health physics personnel maintain such portable instruments onsite.

Plant and Environs Radioactivity

Contrary to the Regulatory Guide 1.97 recommendation regarding the availability of a portable multichannel gamma ray spectrometer, alternative, equivalent methods are used to meet the intent of Regulatory Guide 1.97, Revision 2, Table 2, Plant and Environs Radioactivity (portable instrumentation).

Computerized dose projection capability is provided in certain emergency centers, with the capability to back fit field team sample results to verify initial dose projection calculations.

Detection of fission products in the accident effluent stream is indicated by the presence of iodine. Field team air sample results are obtained by purging noble gasses from a silver zeolite cartridge and measuring the remaining radioactivity, which is conservatively assumed to be iodine until proven otherwise by a detailed analysis. Determination of the presence of iodine in the air sample indicates a degree of failed fuel cladding and fission product barrier breakdown.

Onsite radiological analytical capability exists within the plant to perform detailed analysis. Near site capability is also available at the Emergency Operations Facility to perform detailed analysis of field team samples. Additionally, agreements exist through Washington and Oregon analytical laboratories for analysis of field team samples by their respective emergency plans. This analytical and release assessment capability meets the intent of Regulatory Guide 1.97 without the need to maintain portable multichannel gamma-ray spectrometers.

Wind Direction and Speed (Table 7.5-1, items 17 and 18)

Regulatory Guide 1.97 recommends that wind speed and direction be available on Category 3 instruments. Wind speed should be monitored from 0 to 67 mph and the direction from 0° to 360°.

Wind speed and direction is determined by instruments located on the meteorological tower and transmitted to the meteorological information center. This information is recorded in the control room.

Estimation of Atmospheric Stability (Table 7.5-1, item 19)

Regulatory Guide 1.97, based on vertical temperature differences spaced at set intervals down the meteorological tower, recommends that atmospheric stability (temperature inversion) be detected.

Vertical temperature stratification information is recorded in the control room.

Postaccident Sampling System (See Section 11.6)

Onsite and/or offsite facilities are provided to analyze primary coolant and containment air grab samples for variables and ranges listed in Regulatory Guide 1.97.

Reactor Building Pressure (Table 7.5-1, item 41)

Reactor building pressure is the controlling variable for the SGTS during accident conditions. Flow through the SGTS is automatically regulated to maintain the reactor building at minus 0.25 in. water column to prevent outleakage of potentially radioactive gases.

Emergency Core Cooling System Pump Room Flood Level (Table 7.5-1, item 42)

One level switch is provided in each of the ECCS and the RCIC pump rooms to monitor room flood conditions (due to breaks and/or leaks) in the rooms. Annunciators and safety-related indications are activated in the control room if flood levels reach 6 in. above the floor.

Fuel Pool Cooling Flow (Table 7.5-1, item 43)

Two redundant flow transmitters (one for each loop) monitor loop flows and send signals to control room indicators.

Fuel Pool Temperature (Table 7.5-1, item 44)

Two redundant temperature elements monitor fuel pool water temperature and send signals to control room indicators.

Standby Service Water Radiation (Table 7.5-1, item 45)

For a short period of time during RHR shutdown cooling mode operation the RHR system pressure may exceed that of the SW system. If any RHR heat exchanger tube leaks have developed, it is possible, during accident conditions, to bypass secondary containment radioactivity release processing. To ensure that releases are monitored and appropriate actions taken as required, each of the SW Division 1 and Division 2 loops is provided with a radioactivity monitor providing input to a continuous indication located on a control room back panel. In addition, high radioactivity levels are annunciated in the control room and also recorded on a panel recorder.

Radioactive Gaseous Effluent Release Path Vent Flow Rate (Table 7.5-1, item 9)

Regulatory Guide 1.97 (for Type E) recommends that all effluent release paths from the plant be monitored from 0 to 110% of design flow, for the purpose of release assessment. The three release paths for CGS are via the reactor, turbine, and radwaste buildings. All three are monitored and trended on the plant TDAS system. Additionally the reactor building vent flow is recorded in the control room and the turbine building vent flow is recorded locally.

7.5.3 REFERENCES

7.5-1 Letter from B. A. Boger, NRC, to C. L. Tully, BWROG, Subject: NRC Evaluation of BWR Owner's Group Topical Report NEDO-31558, Position on NRC Regulatory Guide 1.97, Revision 3, Requirements for Post-Accident Neutron Monitoring System (TAC M77660), dated January 13, 1993.

7.5-2 Letter GO2-99-142 from R. L. Webring, Supply System, to NRC, Subject: WNP-2 Operating License NPF-21 Request for Amendment, Post-Accident Neutron Flux Monitoring, License Condition 2.C.(16), Attachment 2, Item 3(b), dated July 29, 1999.

7.5-3 Letter GO2-00-037 from D. W. Coleman, Supply System, to NRC, Subject: WNP-2 Operating License NPF-21 Request for Amendment, Post-Accident Neutron Flux Monitoring, License Condition 2.C.(16), Attachment 2, Item 3(b) (Additional Information), dated February 28, 2000.

7.5-4 Letter GI2-00-088 from J. Cushing, NRC, to J. V. Parrish, Energy Northwest, Subject: WNP-2- Issuance of Amendment re: Wide Range Neutron Monitoring System (TAC NO. MA6165), dated May 18, 2000.

Table 7.5-1

Safety-Related Display Instrumentation

Design Criteria	Type Readout	Number of Channels	Range	Type and Category[a]	Location
1. Reactor vessel pressure	Recorder MS-LR/PR-623A,B[b]	2	0 to 1500 psig	A,1	CR
2. Reactor vessel water level	Recorder MS-LR/PR-623A,B[b]	2	-150 in./0/+60 in.	A,1	CR
	Indicator MS-LI-610[b]	1	-110 in. to -310 in.	A,1	CR
	Recorder MS-LR-615[b]	1	-110 in. to -310 in.	A,1	CR
	Indicator MS-LI-605	1	0 in. to 400 in.	B,3	CR
	Recorder RFW-LR-608	1	0 in. to 180 in.	B,3	CR
3. Neutron Flux	Recorders				
SRM	SRM-LR-602A/B*	2	10^{-3} to 10% power (10^{-1} to 10^{6} cps)	B,*	CR
IRM/APRM	IRM-LR-603A/B*	2	0 to 125% power	B,*	CR
4. RCIC flow	Indicator RCIC-FI-600/1	1	0 to 700 gpm	D,2	CR
5. HPCS flow	Indicator HPCS-FI-603	1	0 to 8000 gpm	D,2	CR
6. LPCS flow	Indicator LPCS-FI-600	1	0 to 8500 gpm	D,2	CR
7.a. Drywell atmosphere temperature	Recorder CMS-TR-5	1	50 to 400°F	D,2	CR
b. Suppression pool atmosphere temperature	Recorder CMS-TR-5	1	50 to 400°F	D,2	CR
c. Drywell atmosphere temperature	Indicator CMS-TI-5	1	50 to 400°F	D,2	CR

* See FSAR Section 7.5.2.2.3.

Table 7.5-1

Safety-Related Display Instrumentation (Continued)

Design Criteria	Type Readout	Number of Channels	Range	Type and Category[a]	Location
8. Primary containment radiation high range area monitors	Recorders PRM-RR-1[b] (Input from CMS RIS-27E)	1	10^0 to 10^7 R/hr	E,1	CR
	PRM-RR-2 (Input from CMS RIS-27F)	1	10^0 to 10^7 R/hr		
9.a. Reactor building gaseous release flow rate	Recorder PRM-FR-1	1	0 to 125,000 cfm	E,2	CR
b. Turbine building gaseous release flow rate	TDAS	1	0 to 396,000 cfm	E,2	Radwaste building
c. Radwaste building gaseous release flow rate	TDAS	1	0 to 155,000 cfm	E,2	CR
10. Primary containment hydrogen concentration	Recorder CMS-O2H2R-1,2	2	0 to 30%	C,3	CR
11. Primary containment oxygen concentration	Recorder CMS-O2H2R-1,2	2	0 to 30%	C,2	CR
12. Suppression pool chamber pressure	Recorder CMS-PR-3,4[b]	2	0 to 100 psig	A,B,D,1	CR
13. Suppression pool water temperature	Recorder CMS-TR-5	1	50 to 400°F	D,2	CR
	Indicator SPTM-TI-5	1	50 to 400°F	D,2	CR
14. Suppression pool water level	Recorder (2 pen) CMS-LR-3,4[b]	2	Pen 2: 2 ft to 52 ft Pen 1: +25 in. to 0 to -25 in.	C,1	CR

Table 7.5-1

Safety-Related Display Instrumentation (Continued)

Design Criteria	Type Readout	Number of Channels	Range	Type and Category[a]	Location
15. Building gaseous release monitor	Recorder PRM-RR-3[a]				CR
	Low range	2		E,C,2	
	TEA-RIS-13		1×10^{-7} to 1×10^{-1} μCi/cc		
	WEA-RIS-14		1×10^{-6} to 1×10^{-1} μCi/cc		
	Intermediate range	2		E,C,2	
	PRM-LCRM-1B[C]		10^{1} to 10^{6} cps		
	High range	2		E,C,2	
	PRM-LCRM-1C[C]		10^{1} to 10^{6} cps		
	PRM-COMP-1[C]		Isotopic	E,3	
	TEA-RIS-13		1×10^{-3} to $1 \times 10^{+3}$ μCi/cc		
	WEA-RIS-14		1×10^{-3} to $1 \times 10^{+3}$ μCi/cc		
	Recorder PRM-RR4[A] (Input from PRM-RIS-1)				CR
	Low range	1	1×10^{-7} to 1×10^{-1} μCi/cc	E,C,2; C,3	
	Intermediate range	1	1×10^{-3} to 1×10^{2} μCi/cc	E,C,2; C,3	
	High range	1	1×10^{0} to 1×10^{6} μCi/cc	E,C,2; C,3	
	Composite	1	1×10^{-7} to 1×10^{6} μCi/cc	E,C,2; C,3	
16. Containment instrument air	Indicator CIA-PI-21A,B	2	0 to 300 psig	D,2	CR
17. Wind speed	Recorder MET-WSR-4	1	0 to 90 mph	E,3	CR
18. Wind direction	Recorder MET-WDR-4	1	0 to 540°	E,3	CR
19. Temperature differential	Recorder MET-TR-1	1	±15°F	E,3	CR
20. Radiation exposure rate and reactor building or secondary containment area radiation	Recorder ARM-RR-32	3	10^{-1} to 10^{4} R/hr	E,3	CR

Table 7.5-1

Safety-Related Display Instrumentation (Continued)

Design Criteria	Type Readout	Number of Channels	Range	Type and Category[a]	Location
21. SRV position indication	Direct indication MS-VPI-LVDT-1A through LVDT/5C	18	Closed or not closed	D,2	CR
	Recorder MS-TR-614	18	0 to 600°F	D,3	CR
22. Power supply monitoring	Voltmeter/ammeter		Various	D,2	CR
	Voltmeters 0 to 5.25 kV ac HPCS-VM-R610 DG-VM-DG1/A DG-VM-DG1/B DG-VM-DG1/C DG-VM-DG2/A DG-VM-DG2/B DG-VM-DG2/C E-VM-SM/7 E-VM-SM/8		Various	D,2	CR
	Voltmeters 0 to 600 V ac E-VM-SL71 E-VM-SL73 E-VM-SL81 E-VM-SL83		Various	D,2	CR
	Voltmeters 0 to 300 V ac E-VM-PP7AA E-VM-PP8AA		Various	D,2	CR
	Voltmeters 0 to 300 V dc E-VM-DPS2/1		Various	D,2	CR
	Voltmeters 0 to 150 V dc HPCS-VM-R618 E-VM-DPS1/1 E-VM-DPS1/2		Various	D,2	CR

Table 7.5-1

Safety-Related Display Instrumentation (Continued)

Design Criteria	Type Readout	Number of Channels	Range	Type and Category[a]	Location
	Voltmeters 0 to 30 V dc E-VM-DP/S0/A E-VM-DP/S/B		Various	D,2	CR
22. Power supply monitoring (continued)	Ammeters HPCS-AM-B1 HPCS-AM-C1 E-AM-C0/1A/1B E-AM-C0/2A/2B E-AM-B0/1A/1B E-AM-B0/2A/2B E-AM-C1/1 E-AM-C1/2 E-AM-C2/1 E-AM-B1/1 E-AM-B1/2 E-AM-B2/1 E-AM-IN2/A E-AM-IN2/B E-AM-IN3/A E-AM-IN3/B E-AM-7/71 E-AM-7/73 E-AM-8/81 E-AM-8/83 DG-AM-DG1 DG-AM-DG2 HPCS-AM-R607		Various	D,2	CR
23. Feedwater flow	Indicator RFW-FI-604A,B	2	0 to 8.5 x 10^6 #/hr	D,3	CR
24. CST level indicator	Indicator COND-LI-40A,B	2	0 to 35 ft	D,3	CR
25. RHR flow (LPCI and shutdown cooling) (drywell spray)	Indicator RHR-FI-603A,B,C	3	0 to 10,000 gpm	D,2	CR
26. RHR heat exchanger outlet temperature	Recorder (2 pen) RHR-TRS-601	2	0 to 500°F	D,3	CR

Table 7.5-1

Safety-Related Display Instrumentation (Continued)

Design Criteria	Type Readout	Number of Channels	Range	Type and Category[a]	Location
27. SLCS flow rate	Indicator SLC-FI-1	1	0 to 100 gpm	D,2	CR
28. SLCS tank level	Indicator SLC-LI-601	1	0 to 5000 gal	D,3	CR
29. HPCS SW discharge pressure	Indicator SW-PI-40	1	0 to 100 psig	D,2	CR
30. SW flow rate	Indicator SW-FI-9A,B	2	0 to 12,000 gpm	D,2	CR
31. SW pond water temperature	Indicator SW-TI-1A-D	4	0 to 200°F	D,2	CR
32. SGTS flow rate	Recorder SGT-FR-2A1,2A2, 2B1,2B2	4	0 to 6000 cfm	E,2	CR
33. DELETED					
34. DELETED					
35. DELETED					
36. Radioactive tank levels	Recorder	6	0 to 100%	D,3	Radwaste building
	Indicator	5	0 to 100%	D,3	Radwaste building
37. Primary containment pressure	Recorder CMS-PR-1,2[b]	2	Pen 1, -5 to +3 psig	A,B,1	CR
			Pen 2, 0 to 25 psig	A,B,1	CR
			Pen 3, 0 to 180 psig	A,B,1	CR
38. Emergency ventilation damper position	Indicator	1 ea.	Open to close	D,2	CR
39. Control rod position	Indicator	1 ea.	Full in or not full in	B,3	CR
40. Primary containment isolation valve position	Indicator[b]	1 ea.	Closed or not closed	B,1	CR

Table 7.5-1

Safety-Related Display Instrumentation (Continued)

Design Criteria	Type Readout	Number of Channels	Range	Type and Category[a]	Location
41. Reactor building atmosphere pressure (differential)	Recorder REA-DPR-1A,B	2	-3 to +7 in. W.C.	D,2	CR
42. ECCS/RCIC pump rooms flood level	Indicating lights FDR-LI-1 to 6[b]	6 (1/room)	0 to 6 in.	A,1	CR
43. FPC flow	Indicator FPC-FI-16,17	2	0 to 1200 gpm	D,2	CR
44. Fuel pool temperature	Indicator FPC-TI-7,8	2	0 to 225°F	D,2	CR
45. SW radiation monitor	Indicator SW-RIS-604, SW-RIS-605	2	10^{-1} to 10^{6} cps	E,C,2	CR

[a] The instruments meet the recommendations required by the category type as described in Regulatory Guide 1.97, Revision 2, unless otherwise noted in text discussion.

[b] These instruments are Technical Specifications postaccident monitoring instrumentation.

[c]Channel is de-termed. This channel no longer provides usable data to the display/recorder.

7.6 ALL OTHER INSTRUMENTATION SYSTEMS REQUIRED FOR SAFETY

7.6.1 DESCRIPTION

The instrumentation and control systems required for safety not discussed in other sections include the following:

a. Process radiation monitoring system,
b. High-pressure/low-pressure systems interlocks,
c. Leak detection system (LDS),
d. Neutron monitoring system (NMS),
e. Recirculation pump trip (RPT) system,
f. Spent fuel pool cooling and cleanup (FPC) system, and
g. Suppression pool temperature monitoring (SPTM) system.

The sources which supply power to the safety-related systems described in this section originate from onsite ac and/or dc safety-related buses or, as in the case of the fail-safe NMS logic and portions of the LDS, from the non-safety-related reactor protection system (RPS) motor-generator (MG) sets. See Chapter 8 for a complete description of the safety-related systems power sources.

7.6.1.1 Process Radiation Monitoring System

The safety-related portions of the process radiation monitoring system are described in Section 7.3.1.1.2.

7.6.1.2 High-Pressure/Low-Pressure Systems Interlocks and Alarms

7.6.1.2.1 Function

Instrumentation and controls are provided to prevent overpressurization of low-pressure piping which interface with the reactor coolant pressure boundary (RCPB).

7.6.1.2.2 Operation

Flow diagrams for the systems involved are shown in Figures 5.4-11, 5.4-15 and 6.3-4.

Component control logic and alarms for the systems involved are shown in Figures 7.3-7, 7.3-9, 7.3-10 and 7.4-1. Instruments are listed in Table 7.6-1.

High-pressure/low-pressure interlocks are provided to sense reactor pressure and prevent the following valves from opening until reactor pressure is below system design pressure:

Interlocked Process Line	Type	Valve
Residual heat removal (RHR) shutdown cooling suction	MO	RHR-V-9 (F009) RHR-V-8 (F008)
RHR shutdown cooling return	MO	RHR-V-53A RHR-V-53B (F053)
RHR head spray	MO	RHR-V-23 (F023)
LPCI injection	MO	RHR-V-42A,B,C (F042)
LPCS injection	MO	LPCS-V-5 (F005)

The interlock for RHR-V-9, suction valve inside the primary containment is redundant and diverse from the interlock for RHR-V-8, suction valve outside the primary containment to ensure that at least one of two valves in series will always isolate when required. Diversity is provided by selecting pressure sensors from two different manufacturers.

Each sub-system process line listed below is provided with an overpressure switch. The pressure switch activates an alarm in the control room to alert the operator to an intersystem leakage situation where a leaking shutoff valve may result in the sub-system pressure exceeding design limits.

The associated pressure switches are shown on the respective system flow diagrams.

a. RHR shutdown cooling suction,
b. RHR A, B, and C pump discharge,
c. Low-pressure core spray system (LPCS) pump discharge,
d. High-pressure core spray (HPCS) pump suction, and
e. Reactor core isolation cooling (RCIC) pump suction.

7.6.1.3 Leak Detection System

The safety-related portions of the LDS are as follows:

a. Main steam line leak detection,
b. RCIC system leak detection,

c. RHR system leak detection,
d. Reactor water cleanup (RWCU) system leak detection,
e. Drywell/reactor building leak detection,
f. Auxiliary steam line leak detection,
g. ECCS pump room flooding detection.

7.6.1.3.1 Function

The LDS instrumentation and controls are designed to monitor leakage from the RCPB plus other specific leakage within the Reactor Building and initiate alarms and/or isolation when predetermined limits are exceeded. See Sections 5.2.5, 3.6.1.15.3 and 9.3.3.2.2.1.

7.6.1.3.2 Operation

LDS instrument arrangement drawings which contain operator information displays are shown in Figures 7.6-1 and 7.6-2. Instruments are listed in Table 7.6-2.

Systems or parts of systems that are in direct communication with the reactor vessel are provided with leakage detection systems.

The required leakage detection system inside the primary containment is designed with a capability to detect leakage less than established leakage rate limits. See the Technical Specifications for the specific values.

Major components within the primary containment that by nature of their design are sources of leakage (e.g., pump seals, equipment warming drains), are collected ultimately in an equipment drain sump located in the reactor building and thereby identified.

Equipment associated with systems within the primary containment (e.g., vessels, piping, fittings) share a common volume. Steam or water leaks from such equipment are collected ultimately in the floor drain sumps located in the reactor building and identified if possible.

Each of the sumps is protected against overflowing to prevent leaks of an identified source from masking those from unidentified sources.

Outside the primary containment, the piping within each system monitored for leakage is in compartments or rooms separate from other systems as feasible so that leakage may be detected by sump or room level, ambient or differential area temperature, or high process flow.

Sensors, wiring, and associated equipment of the LDS that are associated with the isolation valve logic are designed to withstand the conditions that follow a design-basis loss-of-coolant accident (LOCA) (see Section 3.11).

The operator is kept aware of the status of the LDS variables through displays or recorders that indicate the measured variables in the control room. If a trip occurs, the condition is annunciated in the control room.

7.6.1.3.3 Main Steam Line Leak Detection

The safety-related portions of the main steam line LDS are described in Section 7.3.1.1.2.

7.6.1.3.4 Reactor Core Isolation Cooling System Leak Detection

The steam lines of the RCIC system are monitored for leaks by the LDS. Leaks from the RCIC will cause a change in at least one of the following monitored parameters.

The RCIC LDS consists of the following:

a. Equipment area and pipe routing area high ambient and equipment area differential temperature,
b. High flow rate (differential pressure) through the steam line,
c. The turbine exhaust diaphragm high pressure, and
d. Low steam line inlet pressure.

If the monitored variables indicate that a leak may exist, the detection system initiates an RCIC isolation signal (after an approximate 3 sec delay for RCIC high flow).

The following sections describe each of the RCIC leak detection methods.

7.6.1.3.4.1 Reactor Core Isolation Cooling Area Temperature Monitoring. The RCIC area ambient and differential temperature monitoring circuits are similar to those described for the main steam line tunnel temperature monitoring system (see Section 7.3.1.1.2).

Two redundant temperature monitoring channels are provided. Each redundant instrument provides input to one of two logic channels (Division 1 or 2).

Using 1 out of 2 logic, any RCIC equipment area or pipe routing area high ambient or equipment area high differential temperature initiates an isolation of the RCIC system.

A bypass/test switch is provided in each logic channel for the purpose of testing the temperature monitor without initiating RCIC system isolation.

Diversity is provided by RCIC steam line flow and pressure monitoring.

7.6.1.3.4.2 Reactor Core Isolation Cooling Steam Flow Rate Monitoring. The steam line flow rate from the reactor vessel to the RCIC turbine is monitored by redundant differential pressure switches. In the presence of a leak, the flow rate monitor responds by generating the auto-isolation signal. A time delay in each logic division prevents inadvertent system isolations due to pressure spikes. See Section 7.4.1.1.2.

Diversity is provided by ambient temperature, differential temperature, and RCIC steam line pressure monitoring.

7.6.1.3.4.3 Reactor Core Isolation Cooling Turbine Exhaust Diaphragm Pressure Monitoring. The RCIC turbine exhaust diaphragm pressure is monitored by four redundant pressure switches. In the presence of a leak, the RCIC system responds by generating the isolation signal. See Section 7.4.1.1.2.

Using 2 out of 2 logic high turbine exhaust diaphragm pressure initiates isolation of the RCIC system.

Diversity is provided by ambient temperature and differential temperature.

7.6.1.3.4.4 Reactor Core Isolation Cooling Pressure Monitoring. The steam line pressure from the reactor vessel leading to the RCIC turbine is monitored by four redundant pressure switches. In the presence of a leak, the RCIC system responds by generating the auto-isolation signal. See Section 7.4.1.1.2.

Using 2 out of 2 logic low pressure in the steam line initiates isolation of the RCIC system.

Diversity is provided by ambient temperature, differential temperature, and RCIC steam line flow monitoring.

7.6.1.3.5 Residual Heat Removal System Leak Detection

Leaks from the RHR system are detected by equipment area ambient or differential temperature monitoring and by the shutdown cooling suction flow rate. If the monitored parameters indicate that a leak exists, the LDS initiates an RHR isolation signal.

The RHR LDS consists of the following:

a. Equipment area high ambient or high differential temperature,

b. Shutdown cooling suction line high flow rate.

Outputs from both circuits are used to generate the RHR auto-isolation signal (one for each division) to isolate the inboard and outboard isolation valves.

The following is a description of each RHR leak detection method.

7.6.1.3.5.1 Residual Heat Removal Area Temperature Monitoring. The RHR area temperature monitoring circuit is similar to the one described for the main steam line tunnel temperature monitoring system (see Section 7.3.1.1.2).

Two redundant temperature monitoring channels are provided. Each redundant instrument provides input to one of two logic channels (Division 1 or 2).

Using 1 out of 2 logic, high RHR area ambient or differential temperature initiates an RHR isolation signal closing the RHR inboard and outboard isolation valves.

A bypass/test switch is provided in each logic channel for the purpose of testing the temperature monitor without initiating RHR system isolation.

7.6.1.3.5.2 Residual Heat Removal Flow Rate Monitoring. Flow rate monitoring is provided on the RHR shutdown cooling suction line by redundant differential pressure switches.

Flow rates in excess of predetermined limits indicate a line leak or break.

Two redundant differential pressure switches monitor flow and each provides an input to one of the two logic channels (Division 1 or 2).

Using 1 out of 2 logic, the high flow rate initiates an isolation of the RHR inboard and outboard isolation valves.

Diversity is provided by ambient and differential temperature monitoring.

7.6.1.3.6 Reactor Water Cleanup System Leak Detection

The RWCU LDS monitors differential flow, blowdown flow, and temperature. Automatic isolation of the RWCU system isolation valves is initiated when high differential flow, high blowdown flow, or high temperature exists.

The RWCU LDS consists of the following:

a. Leakage monitoring by the flow comparison of RWCU system water inlet and outlet flow rate,

b. Ambient and differential temperature monitoring, and

c. Monitoring the RWCU blow down line to the main condenser for high flow to mitigate a high energy line break.

The following is a description of each RWCU leak detection method:

7.6.1.3.6.1 Reactor Water Cleanup Differential Flow Monitoring. The RWCU system inlet flow is compared to RWCU outlet flow to the feedwater lines or to the main condenser. A flow element, flow transmitter, and square root converter for each of these three lines provides signals to a common flow summer which trips two differential flow alarm units on a high differential flow condition. The high differential flow rate initiates a 45-sec time delay which bypasses the isolation signal during the normal operational system surges, i.e., pump startup or valving changes. If the high differential flow conditions still exists after the time delay, then isolation is initiated. Flow and differential flow indications are provided in the main control room.

Using 1 out of 2 logic in each logic channel (Division 1 or 2), the RWCU flow comparison monitoring initiates RWCU isolation signal. The signal closes the inboard and outboard isolation valves, after a time delay, when the flow rate difference exceeds a preset limit.

Diversity is provided by ambient and differential temperature.

7.6.1.3.6.2 Reactor Water Cleanup Area Temperature Monitoring. See Section 7.3.1.1.2.

7.6.1.3.6.3 Condenser Blowdown Line Flow Monitoring. The RWCU blowdown line to the main condenser is monitored to detect a high energy line break. Two redundant flow transmitters provide flow signals to two flow alarm units in the main control room. The Division 2 signal closes the inboard isolation valve and the Division 1 signal closes the outboard isolation valve when blowdown flow exceeds a preset limit after a specified time delay.

7.6.1.3.7 Drywell Floor Drain Leak Detection

The drywell floor drain sump collects unidentified leakage within the drywell. The leakage is gravity fed to the Reactor Building floor drain sump. The flow is monitored and leakage in excess of the acceptable limit is annunciated in the control room.

7.6.1.3.8 Drywell Equipment Drain Leak Detection

The drywell equipment drain sump collects identified leakage within the drywell. The leakage is gravity fed to the Reactor Building equipment drain sump. The flow is monitored and leakage in excess of the acceptable limit is annunciated in the control room.

7.6.1.3.9 Reactor Building Floor Drain and Equipment Drain Sumps Leak Detection

The floor drain sumps leak detection instrumentation is designed to detect leakage from unidentified sources. The equipment drain sump leak detection instrumentation is designed to detect leakage from identified sources.

A level switch is mounted in each sump and controls the associated sump pump. The sump pump starts when the upper sump level is exceeded and turns off when the level in the sump reaches the lower setpoint. A timer is started and stopped by the upper and lower sump level switches respectively. If the timer exceeds a predetermined setpoint, high flow is annunciated. The timer resets to read when the sump pump stops. A second timer starts timing when the sump pump stops. If the sump pump starts before the second timer reaches a predetermined setpoint, high flow rate is annunciated. The timer is reset to read when the sump pump starts.

A level switch is provided for each sump for high sump water level annunciation purposes. The alarm setpoint is set above the pump start setpoint and will actuate an alarm in the main control room in the event the sump water level exceeds the switch setpoint.

In addition, the ECCS pump room floor drain sumps are provided with a drain header shutoff valve. This valve will isolate the sump from another connected pump room in the event the sump water level exceeds the valve control level switch setpoint, thus minimizing common mode flooding of more than a single pump room (see Figure 9.3-12). See Section 3.6.1.5.2 for the RCIC/CRD pump rooms.

7.6.1.3.10 Emergency Core Cooling Systems Pump Room Flooding Detection

A Class 1E level switch is provided for each of the RHR-A, RHR-B, RHR-C, RCIC, LPCS, and HPCS pump room area. Each level switch is set 6 in. above the pump room floor and will activate an alarm in the main control room in the event the pump room water level exceeds the level switch setpoint (see Figure 7.6-2). See Section 9.3.3.2.2.1.

7.6.1.3.11 Drywell Atmosphere Radiation Monitoring System

The drywell atmosphere is continuously monitored for gaseous and particulate radioactivity by redundant sampling systems. In each system the sample is drawn into the sample system by its vacuum pump. Flow control is provided to ensure proper sample flow. The sample flow path is from the sample point inside the primary containment, through the inlet isolation valve to the particulate monitor chamber. Here the sample is passed through a fixed filter where the particulate matter is deposited while allowing the noble gases to pass through.

After removal of any particulate matter as described above, the gaseous sample passes into a volume chamber where a second scintillation detector checks for noble gas activity.

The sample gas then proceeds through the flow control device, vacuum pump, return line isolation valve, and is discharged back into the primary containment.

7.6.1.3.12 Auxiliary Steam Line Leak Detection

Auxiliary steam line leak detection consists of redundant temperature sensors, temperature monitor with alarm/isolation output function, and the isolation valves (see Section 3.6.1.15.3).

When any one of the four temperature elements detects abnormally high temperature, the logic circuit actuates the closure of auxiliary steam line isolation valves (AS-V-68A or AS-V-68B) and provides audible alarm in the main control room.

Auxiliary steam line leak detection instrumentation provides testable features for motor-operated valve (MOV) closure tests.

7.6.1.4 Neutron Monitoring System

The safety-related portions of the NMS include the intermediate range monitor (IRM), local power range monitor (LPRM), average power range monitor (APRM), and oscillation power range monitor (OPRM).

The NMS instrumentation and controls are designed to monitor reactor power (neutron flux) from startup through full power operation.

The NMS uses in-core detectors, either fixed (LPRM) or removable (IRM), to determine neutron flux levels.

The NMS will initiate a scram when predetermined limits are exceeded and provide operator information during and after accident conditions.

The NMS component control logic is shown in Figure 7.6-3.

7.6.1.4.1 Intermediate Range Monitor

7.6.1.4.1.1 Function. The IRM monitors neutron flux from the upper portion of the source range monitor (SRM) to the lower portion of the power range monitor (APRM) as shown in Figure 7.6-4.

7.6.1.4.1.2 Operation. The IRM has eight channels, each of which includes one detector that can be positioned in the core by remote control. See Figures 7.6-5 and 7.6-6. The detectors are inserted into the core for a reactor startup and are withdrawn after the reactor mode selector switch is placed in the RUN position.

Each detector assembly consists of a fission chamber attached to a low-loss, quartz-fiber-insulated transmission cable. When coupled to the signal conditioning equipment, the detector produces a reading of full scale on the six most sensitive ranges (8 KHz 16 KHZ flux level bandwidth). The detector cable is connected underneath the vessel to a triple-shielded cable that is connected to the preamplifier.

The preamplifier converts current pulses to voltage pulses, modifies the voltage signal, and provides impedance matching. The preamplifier output signal is then sent to the IRM signal conditioning electronics (see Figure 7.6-7).

Each IRM channel input signal from the preamplifier can be amplified and attenuated. The IRM preamplification is selected by a remote range switch that provides 10 ranges of increasing attenuation (the first six called low range and the last four called high range). As the neutron flux of the reactor core increases the signal from the fission chamber is attenuated to keep the input signal to the inverter in the same range. The output signal, which is proportional to neutron flux at the detector, is amplified and supplied to a locally mounted meter, a remote meter and recorder.

The IRM scram trip functions are discussed in Section 7.2.1.1. The IRM setpoints are listed in the Technical Specifications.

The IRM range switches must be up-ranged or down-ranged to follow increases and decreases in power within the range of the IRM to prevent either a scram or a rod block. The IRM detectors must be inserted into the core whenever these channels are needed and withdrawn from the core, when permitted, to prevent unnecessary burnup.

7.6.1.4.2 Local Power Range Monitor

7.6.1.4.2.1 Function. The LPRMs provide localized neutron flux detection over the full power range for input to the APRM.

7.6.1.4.2.2 Operation. The LPRM includes 43 detector strings having detectors located at different axial heights in the core; each detector string contains four fission chambers. Figure 7.6-8 shows the LPRM detector radial layout scheme.

The LPRM assembly consists of four neutron detector (ion chambers) permanently installed in a housing (see Figure 7.6-9), each with an associated solid sheath cable. The chambers are vertically spaced in the LPRM detector assemblies in a way that gives adequate axial coverage of the core, complementing the radial coverage given by the horizontal arrangement of the LPRM detector assemblies.

Each chamber consists of two concentric cylinders, that act as electrodes. The inner cylinder (the collector) is mounted on insulators and is separated from the outer cylinder by a small

gap. The gas between the electrodes is ionized by the charged particles produced as a result of neutron fissioning of the uranium-coated outer electrode. The chamber is operated at a polarizing potential of approximately 100-V dc. The negative ions produced in the gas are accelerated to the collector by the potential difference maintained between the electrodes. In a given neutron flux, all the ions produced in the ion chamber can be collected if the polarizing voltage is high enough. When this situation exists, the ion chamber is considered to be saturated. Output current is then independent of operating voltage.

Each assembly also contains a calibration tube for a traversing in-core probe. The enclosing tube around the entire assembly contains holes that allow circulation of the reactor coolant water to cool the ion chambers. Numerous tests have been performed on the chamber assemblies including tests of linearity, lifetime, gamma sensitivity, and cable effects (Reference 7.6-1). A modified LPRM assembly is used for measurement of electro-chemical corrosion potential (ECP). The modified assembly contains three ECP sensor strings, in addition to the neutron detectors. LPRM operation in the modified assembly is not affected by the ECP electrodes.

The current signals from the LPRM detectors are transmitted through coaxial cable to the LPRM amplifiers in the control room. The amplifier is a linear current amplifier whose voltage output is proportional to the current input and therefore proportional to the magnitude of the neutron flux. Low-level output signals are provided that are suitable as an input to the computer, recorders, etc. The output of each LPRM amplifier is isolated to prevent interference of the signal by inadvertent grounding or application of stray voltage at the signal terminal point.

When a central control rod is selected for movement, the output signals from the amplifiers associated with the nearest 16 LPRM detectors are displayed on reactor control panel meters. The four LPRM detector signals from each of the four LPRM assemblies are displayed on 16 separate meters. The operator can readily obtain readings of all the LPRM amplifiers by selecting the control rods in order. The trip circuits for the LPRM provide trip signals to activate lights, instrument inoperative signals, and annunciators. See Table 7.6-3. These trip circuits are powered from the 24-V dc power supply and are set to trip on loss of power. They also trip when power is not available for the LPRM amplifiers.

The trip levels can be adjusted from 2% to 100% of full-scale deflection and are accurate to ±1% of full-scale deflection in the normal operating environment.

Each LPRM channel may be individually bypassed. When the maximum number of bypassed LPRMs associated with any APRM channel has been exceeded, an inoperative trip is generated by that APRM.

Each individual detector chamber of the assembly is a moisture-proof, pressure-sealed unit. The detector assemblies are designed to operate up to 600°F and 1250 psig. The wiring, cables, and connectors located within the drywell are designed for continuous duty up to 165°F, 55% relative humidity and a 3-hr single exposure rating of 340°F at 100% relative humidity.

Power for the LPRM system is supplied by the two RPS buses. The PRNM equipment receives power from 120 Vac 50/60 Hz. Each PRNM chassis (LPRM) is powered by redundant Low Voltage Power Supply (LVPS) modules contained with a single Quad Low Voltage Power Supply (QLVPS) chassis. One LVPS module is connected to RPS power bus A and the other LVPS module connected to RPS power bus B. For maximum variation in the input voltage or line frequency, the overextended ranges of temperature and humidity, the output voltage varies no more than 2 V.

7.6.1.4.3 Average Power Range Monitor

7.6.1.4.3.1 Function. The function of the APRM is to average signals from the LPRMs and provide a continuous indication of average reactor power from a few percent to greater than rated reactor power. The APRM also provides signals to the OPRM which are used to detect thermal hydraulic oscillations.

7.6.1.4.3.2 Operation. The APRM has four redundant channels. Each channel uses input signals from a number of LPRM detectors.

The APRM compares corrected LPRM values to high and low trip points and averages the filtered readings to obtain a value for the reactor average instantaneous neutron flux value (readings from bypassed LPRMs are automatically excluded from the average). Each APRM channel can average the output signals from as many as 43 LPRMs. Assignment of LPRMs to an APRM follows the pattern shown in Figure 7.6-10. Position A is the bottom position, Positions B and C are above Position A, and Position D is the topmost LPRM detector position. The pattern provides LPRM signals from all four core axial LPRM detector positions.

The APRM gain is adjusted using the instrument's front panel display or accepting the APRM gain calculated from the Percent Core Thermal Power (%CTP) downloaded from the core monitoring system. Each APRM instrument is designed to provide automatic periodic testing of the replaceable hardware modules in an APRM Channel at least every 15 minutes. The APRM firmware (or software) shall continuously cycle through a series of tests when the instrument keylock switch is in the "OPER" position. When the instrument keylock switch is in the "INOP" position, the module tests shall be performed under user control.

See Section 7.2.1.1 for a description of the APRM inputs to the RPS.

The APRM system allowable values are listed in the Technical Specifications. The APRM circuit arrangement for RPS trip input is shown in Figure 7.6-11.

APRM may be bypassed at any time. Each APRM provides a rod block output whenever the minimum number of LPRM inputs to it is not met.

The PRNM equipment receives power from 120 Vac 50/60 Hz. Each PRNM chassis (APRM or RBM chassis) is powered by redundant Low Voltage Power Supply (LVPS) modules contained with a single Quad Low Voltage Power Supply (QLVPS) chassis. One LVPS module is connected to RPS power bus A and the other LVPS module connected to RPS power bus B. Thus, APRM Channels 1, 2, 3, and 4 are powered from the bus used for trip system A and B of the RPS. The AC buses that power an APRM channel also supply power to its associated LPRMs.

7.6.1.4.4 Oscillation Power Range Monitor

7.6.1.4.4.1 Function. The digital-based OPRM detects and suppresses reactor core power instabilities using the Option III approach described in NEDO-31960. The OPRM provides independent oscillation trip signals to the RPS when one of the instability algorithms (Period based, Amplitude based, or Growth based) for an operable OPRM cell has detected an instability condition.

7.6.1.4.4.2 Operation. The OPRM upscale function monitors LPRMs combined into “cells” of 4 LPRMs each. The OPRM system consists of four independent channels capable of detecting thermal hydraulic instability by monitoring the neutron flux within the reactor core. The OPRM function combines the signals from each LPRM in an OPRM cell and evaluates that combined cell signal using the OPRM algorithms to detect thermal-hydraulic instabilities. An OPRM upscale trip output is generated from an APRM channel when the period based detection algorithm in that channel detects oscillatory changes in the neutron flux, indicated by the combined signals for the LPRM detectors in a cell, with the period confirmations and relative cell amplitude exceeding specific setpoints. One or more cells in a channel exceeding the trip conditions will result in a channel trip. An OPRM upscale trip is also issued from any APRM channel is either the growth rate or amplitude based algorithms detect growing oscillatory changes in the neutron flux from one or more cells in that channel. The OPRM upscale trip output is automatically enabled (not-bypassed) when the APRM Simulated Thermal Power is equal to or above the OPRM auto-enable power setpoint and recirculation flow is equal to or below the OPRM auto-enable flow setpoint. The OPRM upscale trip output is automatically bypassed when Simulated Thermal Power and recirculation flow are not within the OPRM trip enabled region. The OPRM upscale trip is active only when the reactor mode switch is in the RUN position.

At least two unbypassed APRM channels must be in the APRM upscale trip or inoperative trip state to cause an APRM/Inop RPS trip output from the ARPM 2-Out-of-4-Voter channels. Similarly, at least two unbypassed APRM channels must be in the OPRM upscale trip state or

inoperative state to cause an OPRM Upscale RPS trip output from the ARPM 2-Out-of-4-Voter channels. The APRM Upscale/Inop and OPRM Upscale/Inop trips are combined and input to the 2-Out-of-4-Voter channels. All four voter channels will provide RPS trip output, two to each RPS trip system. If only one unbypassed APRM channel is providing a trip output, each the four APRM 2-Out-of-4-Voter channels will have a half-trip, but no trip signals will be sent to the RPS. Removing voltage to a relay coil transmits trip outputs to RPS, so loss of power results in actuating the RPS trips. Loss of a 2-Out-of-4-Voter channel results in an RPS half-scram.

The OPRM protection system provides the following control board annunciator outputs to the control room operator:

- OPRM TRIP ENABLED (reactor has reached the operating region where instability can occur and oscillation trip output has been enabled),
- OPRM ALARM (when one of the instability algorithms (Period based, Amplitude based, or Growth based) for an operable OPRM cell has exceeded user defined setpoints),
- OPRM TRIP (provides trip signal to RPS when one of the instability algorithms (Period based, Amplitude based, or Growth based) for an operable cell has detected an instability condition), and
- OPRM INOP (when the quantity of operable OPRM cells is less than the required 25 out of 30 OPRM cells for each of the four OPRM channels.

7.6.1.5 Recirculation Pump Trip System

7.6.1.5.1 Function

The function of the RPT is to mitigate the thermal consequences of the turbine trip and generator trip transients by tripping the recirculation pumps early in the event, producing rapid pump flow coastdown and additional core voiding, which results in a core reactivity reduction. This system is linked to the RPS such that both a scram and a pump trip occur when the turbine stop valves start to close and when turbine governor valve fast closure occurs. Both scram and RPT are bypassed at low thermal power levels.

The RPT system is required to trip both recirculation pumps from their normal power source within 200 msec after a turbine/generator trip or load rejection event occurs with reactor power level greater than 29.5% of rated thermal power. This trip cannot be prevented or caused by any single component failure in the system.

7.6.1.5.2 Operation

The RPT logic is derived from relays in the RPS which are activated by turbine stop valve limit switches and turbine control valve oil pressure switches. Contacts from these relays are arranged in a logic scheme so that deenergizing various combinations of the relays will energize the RPT trip coil in each of two main power source circuit breakers provided for each recirculation pump (see Figures 7.6-12 and 7.6-13).

Each main circuit breaker has two trip coils. One trip coil is activated by an RPT signal only. The other trip coil is activated by all other breaker trip functions. The dual trip coils serve to separate the breaker safety function from its non-safety functions.

Turbine governor valve fast closure signals to the RPT system from the RPS are derived from oil line pressure switches located on each of the four fast-acting control valve hydraulic mechanisms (see Figure 7.6-14).

Turbine stop valve closure signals to the RPT system from the RPS are derived from valve stem position switches mounted on the four turbine stop valves. The switches open before the valve is more than 10% closed to provide the earliest positive indication of valve closure (see Figure 7.6-15).

Turbine first-stage pressure signals to the RPT system from the RPS are derived from four pressure switches. The pressure switches trip at a pressure setpoint corresponding to 29.5% power to bypass the turbine stop valve and turbine control valve fast closure trips below this value (see Figure 7.6-14).

The RPT, when initiated, completes the recirculation pumps circuit breakers trip. Restarting the pumps for normal power operation requires deliberate operator actions.

Channel and logic relays are fast-response, high-reliability relays from the RPS. The relays are selected so that the continuous load will not exceed 50% of the continuous duty rating. The total response time from start of the turbine control valve fast closure signal or the turbine stop valve closure signal to complete suppression of the electric arc between the fully open contacts of the pump motor circuit breaker is less than 200 msec on a 60 Hz basis. With the adjustable speed drive (ASD) installation, this time delay varies from 185 to 200 msec.

The RPT logic is illustrated in Figure 7.6-13. The system is arranged as two separately powered trip systems. Each logic trip system has at least two channels of the monitored variable. Either of the two automatic trip systems will trip both of the two recirculation pump motors.

Table 7.6-4 provides a summary of the recirculation system trip functions and actions.

7.6.1.5.2.1 Bypasses and Interlocks. With the reactor power under 29.5%, the RPT is automatically bypassed by four pressure switches associated with the turbine first stage. Any one of the four channels in a bypass state initiates main control room annunciation. A manual key-locked bypass switch is provided for each of the two RPT systems, located on the relay panels, for logic testing. Placing the manual switch in bypass position initiates a control room annunciator. The RPT is not inhibited, since the redundant system is operable.

The RPT system initiation logic is composed of contact from the RPS sensor channel relays. The interlock is performed using separate relay contacts so that no failure in the RPT system can prevent an RPS scram.

7.6.1.5.2.2 Redundancy. The RPT is divided into two divisions. Each division duplicates the function of the other to the extent that either system performs the pump motor power supply trip regardless of the state of operation or failure of the other trip system. The turbine stop valve closure and turbine governor fast valve closure signals are diverse inputs to the RPT for pump motor trip. Each pump motor is provided with two circuit breakers in series tripped from redundant division logic.

7.6.1.5.2.3 Testability. The RPT system logic can be tested during reactor operation without pumps trip and without inhibiting the pumps trip function by the redundant system.

A key-locked bypass switch for system circuit testing is provided for each system located at the RPS relay cabinets.

Since the RPT system logic consists of relay contacts actuated in the RPS, the RPS surveillance tests will include the testing of the RPT logic system. See Section 7.2 for RPS testing.

7.6.1.5.2.4 Environmental Considerations. The electrical equipment and devices of the RPT system are located in the control building and in the electrical equipment rooms. These areas have a controlled environment isolated from an accident environment ensuring reliable operation. The logic channel sensors located at the turbine-generator are discussed in Section 7.2.

7.6.1.5.2.5 Operational Considerations. The sensor channel logic relays are normally energized with contacts open in the RPT system logic. Loss of both RPS MG buses or sensor variables out of tolerance will cause RPT.

The RPT system has no manual trip feature. The pump motor power supply circuit breakers have their normal manual control switches at the control room panels for normal pump start and stop operation. These controls are isolated from the RPT circuits. Circuit breaker status indications for the operator consist of a green pilot light for breaker open position and one red pilot light for breaker closed.

7.6.1.6 Spent Fuel Pool Cooling and Cleanup System

7.6.1.6.1 Function

The function of the FPC system is to remove decay heat from the spent fuel storage pool to ensure adequate cooling of irradiated stored fuel assemblies. The FPC system also purifies the

storage pool water, maintains water clarity for fuel handling operations, and fills and drains the fuel transfer canal. See Section 9.1.3.

7.6.1.6.2 Operation

Schematic arrangement of the FPC system mechanical equipment is shown in Figure 9.1-5. The FPC system component control logic is shown in Figures 7.6-16 through 7.6-26. Instruments are listed in Table 7.6-5. Operator information displays are shown in Figure 9.1-5 and Figures 7.6-16 through 7.6-26.

The FPC system consists of two redundant cooling loops. System operation is discussed in Section 8.1.3.

Instrumentation is provided to monitor the pool temperature, pool level, pump discharge pressures, and water conductivity to allow the control room operator to assess system operation. Channels provided versus channels required for protective action completion are listed in Table 7.6-6.

7.6.1.7 Suppression Pool Temperature Monitoring System

7.6.1.7.1 Function

The SPTM system is designed to monitor suppression pool water temperature and alert the plant operator to the potentially hazardous condition of elevated pool water temperature.

The instrumentation for the SPTM system is shown in Figure 5.4-11 and Figure 9.4-8.1. Instruments are identified in Table 7.6-7.

7.6.1.7.2 Operation

The SPTM system consists of two separate divisions, each with 12 dual element thermocouples and multipoint recorder. The 24 channels are at eight locations evenly spaced around the perimeter of the pool. Sixteen channels are arranged in an upper ring at el. 465 ft 5.75 in. The remaining eight channels are mounted at el. 447 ft 10.25 in. Each quadrant contains four upper level and two lower level thermocouples. This arrangement was chosen to track stratification. Average suppression pool temperature is recorded in the control room using data from eight channels, one per division per quadrant. Temperature indication from all 24 channels is available at the control room. Additionally, a separate indicator is available for direct readout of suppression pool average temperature (Division 1 only).

The time constant for the thermocouples is no greater than 15 sec. The time from thermocouple signal input to initiation of alarm is no greater than 60 sec.

Each division of the SPTM system is provided with a multipen recorder for individual thermocouple temperature recording, a microprocessor for averaging the thermocouple outputs of both divisions and providing an average bulk suppression pool temperature, a recorder for recording the average bulk temperature, and audiovisual annunciators which alarm on abnormally high suppression pool temperature outputs of each division and of the bulk temperature averaging system.

7.6.1.8 Design Basis

The safety-related systems described in this section are designed to provide timely protective action inputs to other safety systems to protect against the onset and consequences of conditions that threaten the integrity of the fuel barrier and the RCPB. Chapter 15 identifies and evaluates events that jeopardize the fuel barrier and RCPB. The methods of assessing barrier damage and radioactive material releases, along with the methods by which abnormal events are identified, are also presented in Chapter 15.

The station conditions which require protective actions are described in Chapter 15.

7.6.1.8.1 Variables Monitored to Provide Protective Actions

The following variables are monitored to provide protective action inputs:

a. High pressure/low pressure system interlocks - reactor pressure;

b. LDS

1. RCIC area temperatures - differential and ambient,

2. RCIC steam line flow rate,

3. RCIC turbine exhaust diaphragm pressure,

4. RCIC steam line pressure,

5. RHR area temperatures - differential and ambient,

6. RHR shutdown cooling suction flow (not credited in the Columbia Generating Station [CGS] accident analysis),

7. RWCU area temperatures - differential and ambient,

8. RWCU differential flow (not credited in the CGS accident analysis),

9. RWCU blowdown line flow,

10. Identified and unidentified leakage from the drywell floor and equipment drain sumps,

11. Drywell atmosphere radiation monitor,

12. Main steam pipe tunnel area temperatures - differential and ambient,

13. Auxiliary steam line area temperature,

14. Reactor building floor drain and equipment drain sumps level,

15. Emergency core cooling systems (ECCS) pump room level;

c. NMS

1. IRM neutron flux,
2. APRM neutron flux;

d. RPT system

1. Turbine throttle valve closure,
2. Turbine governor valve fast closure;

e. Spent FPC system; and

f. Suppression pool temperature monitoring system

The plant conditions which require protective action involving the safety-related systems discussed in this section are described in Chapter 15.

7.6.1.8.2 Location and Minimum Number of Sensors

See the Technical Specifications for the minimum number of sensors required to monitor safety-related variables. The IRM and LPRM detectors are the only sensors which have spatial dependence.

7.6.1.8.3 Prudent Operational Limits

Prudent operational limits for each safety-related variable trip setting are selected to be far enough above or below normal operating levels so that a spurious safety system initiation is avoided. It is then verified by analysis that the release of radioactive materials, following

postulated gross failures of the fuel or nuclear system process barrier, is kept within acceptable bounds.

7.6.1.8.4 Margin

The margin between operational limits and the limiting conditions of operation of the safety-related systems are addressed in the Technical Specifications.

7.6.1.8.5 Levels

Levels requiring protective action are established in the Technical Specifications.

7.6.1.8.6 Range of Transient, Steady State, and Environmental Conditions

See Section 3.11 for environmental conditions. See Sections 8.2.1 and 8.3.1 for the maximum and minimum range of energy supply to the safety-related instrumentation and controls of the systems described in this section. All safety-related instrumentation and controls are specified and purchased to withstand the effects of energy supply ranges.

Environmental conditions for proper operation of the systems described in this section are discussed in Sections 3.10 and 3.11.

7.6.1.8.7 Malfunctions, Accidents, and Other Unusual Events Which Could Cause Damage to Safety Systems

Chapters 3, 6, 9, 15, and Appendix F describe the following credible accidents and events: floods, storms, tornadoes, earthquakes, fires, LOCA, pipe break outside containment, and missiles.

7.6.1.8.7.1 Floods. The buildings containing safety-related components have been designed to meet the probable maximum flood (PMF) at the site location. See Section 2.4. Therefore, none of the functions are affected by external flooding. For a discussion of internal flooding protection see Sections 3.4 and 3.6.

7.6.1.8.7.2 Storms and Tornadoes. The buildings containing safety-related components have been designed to withstand all credible meteorological events and tornadoes as described in Section 3.3.

7.6.1.8.7.3 Earthquakes. The structures containing safety-related system components have been seismically qualified as described in Sections 3.7 and 3.8 and will remain functional during and following a safe shutdown earthquake (SSE).

7.6.1.8.7.4 Fires. To protect the safety systems in the event of a postulated fire, the components have been separated by distance, electrical separation barriers, and/or fire barriers. The use of separation and barriers ensures that even though some portion of the system may be affected the safety function will not be prevented.

Within the control room power generation control complex (PGCC) (underfloor cable routing ducts) heat detectors and products of combustion detectors are provided to initiate a Halon fire suppression system.

7.6.1.8.7.5 Loss-of-Coolant Accident. The safety-related systems components described in this section and functionally required during and/or following a LOCA have been environmentally qualified to remain functional as discussed in Section 3.11.

7.6.1.8.7.6 Pipe Break Outside Containment. Protection for these components is described in Section 3.6.

7.6.1.8.7.7 Missiles. Protection for safety-related components is described in Section 3.5.

7.6.1.8.8 Minimum Performance Requirements

Minimum performance requirements for safety-related systems instrumentation and controls are provided in the Technical Specifications and the Licensee Controlled Specifications (LCS).

7.6.1.9 Final System Drawings

Functional and architectural design difference between the PSAR and FSAR are listed in Table 1.3-8.

7.6.2 ANALYSIS

7.6.2.1 Safety-Related Systems - Instrumentation and Controls

Chapter 15 evaluates the individual and combined capabilities of the safety-related systems described in this section.

The safety-related systems described in this section are designed such that a loss of instrument air, a plant load rejection, or a turbine trip will not prevent the completion of the safety function.

7.6.2.2 Conformance to 10 CFR 50, Appendix A - General Design Criteria

The following is a discussion of conformance to those General Design Criteria (GDC) which apply specifically to the safety-related systems described in this section. See Section 3.1 for a discussion of GDC which apply equally to all safety-related systems.

The GDC for the NMS and process radiation monitoring system are discussed in Sections 7.2.2.1 and 7.3.2.1.1.

GDC 12 - Suppression of Reactor Power Oscillations

The NMS provides protective actions to the RPS to ensure that fuel design limits are not exceeded.

GDC 13 - Instrumentation and Control

The safety-related instrumentation and controls monitor variables over their anticipated ranges for normal operation, anticipated occurrences, and accident conditions and initiate protective actions to limit or prevent fuel damage and maintain the integrity of the RCPB and the primary containment.

GDC 15 - Reactor Coolant System Design

The safety-related systems provide sufficient margin to ensure that the design conditions of the RCPB are not exceeded during any condition of normal operation, including anticipated operational occurrences. If the monitored variables exceed their predetermined settings, automatic safety actions are provided.

GDC 30, 34, 35, 38, and 40

The LDS provides means for detecting the source of reactor coolant leakage.

GDC 61, 62, and 63

The FPC system provides reliable fuel pool RHR capability.

7.6.2.3 Conformance to IEEE Standards

The following is a discussion of conformance to IEEE 279-1971, Criteria for Protection Systems for Nuclear Power Generating Stations, that applies specifically to the safety-related systems described in this section. See Section 7.1.2.3 for a discussion of IEEE standards which apply equally to all safety-related systems.

General Functional Requirement (IEEE 279-1971, paragraph 4.1)

The safety-related systems described in this section automatically initiate protective actions or provide information to the operator when a condition monitored reaches a preset level for all conditions described in Section 7.6.1. For example, the LDS initiates containment isolation by closure of containment isolation valves when area temperatures exceed preset limits.

Single Failure Criterion (IEEE 279-1971, paragraph 4.2)

The safety-related systems described in this section are not required to meet single failure criteria on an individual system basis. However, on a network basis, the single failure criteria does apply to ensure the completion of a protective function. Redundant sensors, wiring, logic, and actuated devices are physically and electrically separated such that a single failure will not prevent the protective function. See Section 8.3.1.4 for a discussion of the CGS separation criteria.

The RPT meets the single failure criterion. Sensors are electrically and physically separated with conduit provided to the RPS cabinets. The RPT signals to recirculation pump motor circuit breaker trip coils are separated into Division 1 and Division 2 and circuit breaker to pump motors are divisionally separated.

Quality of Components and Modules (IEEE 279-1971, paragraph 4.3)

See Section 3.11 for a discussion of safety system component quality.

Equipment Qualification (IEEE 279-1971, paragraph 4.4)

Vendor certification verifies that the sensors associated with each of the systems required for safety trip variables, manual switches, and trip logic components located in mild environments perform in accordance with the requirements listed on the purchase specification as well as in the intended application. This certification, in conjunction with the existing field experience with these components in this application, will serve to qualify these components.

See Sections 3.10 and 3.11 for a discussion of seismic and harsh environment structure, system, and component qualification.

For a complete discussion of equipment qualification for the safety-related systems described in this section, see Sections 3.5, 3.6, 3.10, and 3.11.

Channel Integrity (IEEE 279-1971, paragraph 4.5)

For a discussion of channel integrity for the safety-related systems described in this section under all extremes of conditions described in Section 7.6.1.8.6 see Sections 3.10, 3.11, 8.2.1, and 8.3.1.

Channel Independence (IEEE 279-1971, paragraph 4.6)

System channel independence is maintained by application of the CGS separation criteria as described in Section 8.3.1.4.

Control and Protection System Interaction (IEEE 279-1971, paragraph 4.7)

There are no control and protection system interactions for the systems described in this section.

Derivation of System Inputs (IEEE 279-1971, paragraph 4.8)

The variables discussed in this section are direct measures of the desired variables indicating the need for protective action.

Capability for Sensor Checks (IEEE 279-1971, paragraph 4.9)

For a discussion of sensor checks for the safety-related systems described in this section, see Regulatory Guide 1.22 in Section 7.6.2.4.

Capability for Test and Calibration (IEEE 279-1971, paragraph 4.10)

For a discussion of the test and calibration capability of the safety-related systems described in this section, see Regulatory Guide 1.22 in Section 7.6.2.4.

Channel Bypass or Removal from Operation (IEEE 279-1971, paragraph 4.11)

During periodic testing, any one sensor of the safety-related systems described in this section may be valved-out-of-service and returned-to-service under administrative control procedures. Since only one sensor is valved-out-of-service at any given time during the test interval, protective action capability for the safety-related variables is maintained through the remaining redundant instrument channels.

A sufficient number of IRM channels has been provided to permit any one IRM channel in a given trip system to be manually bypassed and still ensure that the remaining operable IRM channels comply with the single failure criterion.

One IRM manual bypass switch has been provided for each RPS trip system. The mechanical characteristics of this switch permit only one of the four IRM channels of that trip system to be bypassed at any time. To accommodate a single failure of this bypass switch, electrical interlocks have also been incorporated into the bypass logic to prevent bypassing of more than one IRM in that trip system at any time. Consequently, with any IRM bypassed in a given trip system, three IRM channels remain in operation to satisfy the protection system requirements.

The APRM system is designed so that only one APRM may be bypassed at any given time. The bypass switch is a five-position center locking joystick that mechanically switches four fiber optic signals. The bypass switch is optically isolated. When the switch is in one of the four bypass positions, light from only one of the four fiber optic signals (corresponding to the switch position) shall be allowed to pass through the switch. With an APRM bypassed, a trip of two or more APRM channels out of three will result in a trip output from all four-voter channels. The voter channels cannot be bypassed.

The LDS logic is provided with a bypass/test switch for the purpose of testing temperature sensors without initiating associated system isolation. Operation of one switch at a time will not prevent the remaining redundant isolation logic from providing system isolation if required.

The RPT system meets this design requirement as described in Section 7.6.1.5.2.1.

Operating Bypasses (IEEE 279-1971, paragraph 4.12)

There are no operating bypasses for any of the safety-related systems described in this section except for the RPT system.

The recirculation pump motors are not required to trip below 29.5% of rated power. The trip operating bypasses are automatically reinstated above 29.5% power.

Indication of Bypasses (IEEE 279-1971, paragraph 4.13)

For a discussion of automatic bypass indication for the safety-related systems described in this section see Section 7.1.2.4, Regulatory Guide 1.47.

Access to Means for Bypassing (IEEE 279-1971, paragraph 4.14)

Access to means for bypassing any safety action or safety function is under the administrative control of the control room supervisor/shift manager. Other approved methods of controlling access to bypasses are also used. These include key locks with administrative control of the access to keys, procedurally controlled equipment lineups, e.g., locked valve checklists, and the use of mechanical locking devices and annunciators and other indications, e.g., BISI (Regulatory Guide 1.47, Bypass and Inoperable Status Indication for Nuclear Power Plant Safety Systems, described in Section 7.1.2.4). These additional methods help to prevent inadvertent bypasses or to alert the plant operators to safety function bypasses occurring either

from equipment failures or from manually induced bypasses that result as part of testing, maintenance, or equipment repair activities.

Key-locked control switches that provide a means of controlling the access to a safety function bypass are designed to allow key removal only in the "safe" or "accident" positions. Access to the associated keys is procedurally controlled. When not in use, keys are under the administrative control of the control room supervisor/shift manager and stored in a key locker. The keys are audited once per day by the control room supervisor/shift manager. When operation of a key-locked control switch is required to be immediate, such as in the case of the reactor mode switch, the key may be left in the lock during normal plant operation to ensure timely actuation.

Multiple Set Points (IEEE 279-1971, paragraph 4.15)

There are no multiple setpoints within the safety-related systems described in this section.

Completion of Protective Action Once it is Initiated (IEEE 279-1971, paragraph 4.16)

Initiation control logic for the safety-related systems described in this section seals in electrically and remains energized or deenergized. After initial conditions return to normal deliberate operator action is required to return (reset) the safety system logic to normal.

The FPC system is initiated manually for continuous pool cooling when the pool contains spent fuel.

Manual Initiation (IEEE 279-1971, paragraph 4.17)

For a discussion of the manual initiation capability for the safety-related systems described in this section, see Regulatory Guide 1.62 in Section 7.6.2.4.

Access to Set Point Adjustments, Calibration, and Test Points (IEEE 279-1971, paragraph 4.18)

During reactor operation access to setpoint adjustments, calibration controls, and test points for the safety-related systems variables described in this section is under administrative control of the control room operator.

Identification of Protective Actions (IEEE 2791971, paragraph 4.19)

When a safety-related system protective action sensor described in this section exceeds its predetermined setpoint, a control room annunciator is initiated to identify that variable and a typed record is available from the process computer and transient data acquisition system.

Information Readout (IEEE 279-1971, paragraph 4.20)

The safety-related systems described in this section are designed to provide the operator with accurate and timely information pertinent to their status. This information does not give anomalous indications confusing to the operator.

System Repair (IEEE 279-1971, paragraph 4.21)

During periodic testing of the safety-related systems described in this section (except as noted) the operator can determine defective components and replace them during plant operation.

Replacement of IRM and LPRM detectors must be accomplished during plant shutdown. Repair of the remaining portions of the NMS may be accomplished during plant operation by appropriate bypassing of the defective instrument channel. The design of the system facilitates rapid diagnosis and repair.

The RPT system components are designed to facilitate maintenance with the exception of the turbine stop valve limit switches. The redundancy of the eight switches permits plant operation with a defective switch until access can be gained to the switches for repair.

Identification of Protection Systems (IEEE 279-1971, paragraph 4.22)

Each cabinet containing safety system components is labeled with the system designation and the particular redundant portion is listed on a distinctively colored marker plate. Cabling outside the cabinets is identified specifically as belonging to a particular safety system. See Section 8.3.1.3. Redundant racks are identified by the identification marker plates.

7.6.2.4 Conformance to Regulatory Guides

The following is a discussion of conformance to those Regulatory Guides which apply specifically to the safety-related systems discussed in this section. See Section 7.1.2.4 for a discussion of Regulatory Guides which apply equally to all safety-related systems.

Regulatory Guide 1.22 (February 1972)

The APRMs are calibrated to reactor power by using reactor heat balance and the traversing in-core probe (TIP) system to establish the relative local flux profile. LPRM gain settings are determined from the local flux profiles measured by the TIP system once the total reactor heat balance has been determined.

The gain-adjustment-factors for the LPRMs are produced as a result of the process computer nuclear calculations involving the reactor heat balance and the TIP flux distributions. These

adjustments when incorporated into the LPRMs permit the nuclear calculations to be completed for the next operating interval and establish the APRM calibration relative to reactor power.

The IRMs are calibrated by comparison with the APRMs.

The proper operation of the sensors and the logic associated with the LDS is verified during the LDS surveillance tests that are provided for the various components during plant operation. Each temperature monitor channel, for both ambient and differential which provide isolation signals, is connected to one element of a dual thermocouple(s).

Each temperature monitor indicates when the temperature exceeds the setpoint. To verify the thermocouple (sensor) input, a comparison of the redundant sensor readings, one from the trip channel, and the recorded channel is made. The recorded channel monitors the second element of the dual thermocouple. The first element is part of the trip channel. To test the temperature trips a simulated trip level signal is inputted to the monitor from an external source. In addition, key lock test switches are provided so that instrument and logic channels can be tested without sending an isolation signal to the system involved. Thus, a complete system check can be confirmed by checking actuation of the trip logic relay associated with each temperature monitor.

The RWCU differential flow leak detection alarm units are tested by inputting an electrical signal to simulate a high differential flow. Alarm and indicator lights monitor the status of the trip circuit.

The RPT system is testable up to but not including actual RPT circuit breaker during periodic testing of the sensor channels and logic systems. The pump trip circuit breaker testing is performed during the refueling outage.

The turbine stop valves are tested individually by closing a stop valve and verifying RPT relay operation before the control room lights indicate the valve is closed. Calibration of the limit switches is possible only during shutdown and by physical observation. The turbine governor valve closure pressure switches may be valved out, tested, and calibrated during periodic testing.

All other system instrumentation is tested and calibrated during normal reactor operation by valving out the instrumentation and supplying a test pressure source.

Regulatory Guide 1.45 (May 1973)

The leakage to the primary reactor containment from identified sources such as recirculation pump seal, fuel storage pool, head seal, etc., is separated so that flow rates are monitored separately from unidentified leakage and total flow rate can be established and monitored. The leakage from the main steam line safety/relief valves (SRVs) is identified leakage because of

the location of the sensors which detect this leakage, but the leakage is not completely separated from unidentified sources.

Separation of this leakage is not required since any leak from the main steam line SRVs would not be from a crack or break in the line so there would be no identified leakage from the SRV lines during plant operation which necessitates separation from unidentified leakage. The leakage to the reactor containment from unidentified sources is collected and this flow rate is monitored with an accuracy of better than 1 gal/minute.

The leak detection methods used to monitor unidentified leakage include sump flow monitoring, airborne particulate radioactivity monitoring, and airborne gaseous radioactivity monitoring.

Provisions are made to monitor systems connected to the RCPB for signs of intersystem leakage, including radioactivity monitoring of process fluids (process radiation system) and reactor vessel water level monitoring [nuclear steam supply system (NSSS)].

The sensitivity and response time of each system for detection of unidentified leakage is 1 gal/minute in less than 1 hr, except for the airborne particulate radioactivity and airborne gaseous activity monitoring channels, which have sensitivities of 1E-9 microcuries/cc and 1E-6 microcuries/cc respectively, which are consistent with the sensitivities suggested for these channels by Regulatory Guide 1.45. Design calculations demonstrate that the particulate monitors are capable of detecting a 1 gpm leak in 1 hour or gaseous monitors are capable of detecting 1 gpm leak in 10 hours against a background of design leakage.

The specific conditions in the design calculations under which the stated capabilities can be met are as follows:

Variable	Particulate Monitors	Gaseous Monitors
Radioisotope concentration in reactor coolant	Table 5 of ANS-18.1, Source Term Specification N237, reduced by a factor of 100	GE Specification 22A2703F Rev. 3
Background leakage rate	2.1 gpm and 5.5 gpm	2.1 gpm
Duration of background leakage	1 day and 100 days	1 day

The leakage detection system instruments listed in Table 7.6-2 have been evaluated and shown to be available for operation following an operating basis earthquake (OBE). The particulate radioactivity monitoring channel is available for operation following an SSE.

The drywell floor drain and equipment drain sumps, piping to the sumps, and the equipment drain cooler are seismically supported such that they will continue to pass leakage flow following an OBE.

The level switches are used to monitor leakage from reactor building drains to the respective sumps.

Indicators and alarms for each leakage detection system are provided in the main control room. At the site, procedures for converting various indications (e.g., temperature, Δt, and pressure) to a flow rate measurement will be provided by means of conversion curves whenever meaningful.

Major components within the drywell that by nature of their design are sources of leakage (e.g., pump seals) are contained and piped to an equipment drain sump and thereby identified.

Equipment associated with systems within the drywell (e.g., vessels, piping, fittings) share a common free volume, therefore, their leakage detection systems are common. Steam or water leaks from such equipment are collected ultimately in an area drain sump.

Each of the sumps are protected against overflowing leaks from one source masking those from another.

As added backup to the unidentified leakage drain system, the main steam lines within the steam tunnel are monitored by temperature detectors within the tunnel.

Regulatory Guide 1.53 (June 1973)

See Section 7.6.2.3 (IEEE 279-1971, paragraph 4.2).

Regulatory Guide 1.62 (October 1973)

The FPC system is manually initiated from the main control room by actuation of system pump and valve controls.

7.6.3 REFERENCES

7.6-1 Morgan, W. R., "In-Core Neutron Monitoring System for General Electric Boiling Water Reactors," APED-5706, November 1968 (Rev. April 1969).

Table 7.6-1

High to Low Pressure System
Interlocks Instrumentation

Function	Instrument[a]
RHR shutdown cooling valves isolation	Pressure switch (B35-N018A, B) RRC-PS-18A, B
LPCI injection valve permissive	Pressure switch (B22-N413A, B, D) MS-PS-413A, B, D
LPCS injection valve permissive	Pressure switch (B22-N413C) MS-PS-413C

[a] Instruments in parentheses are the GE designation.

Table 7.6-2

Leak Detection System
Instrumentation

Function	Instrument[a]
Reactor core isolation cooling steam supply pressure low	Pressure switch (E31-N022A-D) RCIC-PS-22A-D
Reactor core isolation cooling steam supply high flow	Differential pressure switch (E31-N007B) RCIC-DPIS-7B (E31-N013A, B) RCIC-DPIS-13A, B
Reactor core isolation cooling turbine exhaust pressure high	Pressure switch (E31-N012A-D) RCIC-PS-12A-D
Reactor core isolation cooling equipment room high differential temperature	Temperature monitor LD-MON-1A LD-MON-1B
Reactor core isolation cooling equipment room high temperature	Temperature monitor LD-MON-1A LD-MON-1B
Reactor water cleanup/RCIC steam line routing area temperature high	Temperature monitor LD-MON-1A LD-MON-1B
Main steam line tunnel temperature high	Temperature monitor LD-MON-2A LD-MON-2B
Main steam line tunnel differential temperature high	Temperature monitor LD-MON-2A LD-MON-2B

Table 7.6-2

Leak Detection System
Instrumentation (Continued)

Function	Instrument[a]
Residual heat removal equipment area temperature high	Temperature monitor LD-MON-2A LD-MON-2B
Residual heat removal equipment area differential temperature high	Temperature monitor LD-MON-2A LD-MON-2B
Residual heat removal shutdown cooling suction flow rate - high	Differential pressure switch (E31-N012A, B) RHR-DPIS-12A, B
Residual heat removal heat exchanger area temperature - high Room 606 Room 507 Room 605 Room 505	Temperature monitor LD-MON-2A LD-MON-2B
Main steam line high flow	Differential pressure switch (E31-N008A-D through E31-N011A-D) MS-DPIS-8A-D, 9A-D, 810A-D, 11A-D
Reactor building equipment drain sump level high	Level switch (G11-N014A, B) EDR-LS-14A, B

Table 7.6-2

Leak Detection System
Instrumentation (Continued)

Function	Instrument[a]
Reactor building floor drain sumps level high	Level switch (G11-N006A, B) (G11-N005A, B) FDR-LS-6A, B FDR-LS-5A, B
Drywell floor drain flow high Drywell equipment drain flow high	Flow recorder switch EDR-FRS-623
Drywell atmosphere particulate monitor	Radiation monitor CMS-RIS-12A, 12B
Drywell atmosphere noble rad gas monitor	Radiation monitor CMS-RIS-12A, 12B
Reactor water cleanup Δ flow - high	Flow switch (E31-N605A, B) LD-FS-605A, B
Reactor water cleanup blowdown line flow - high	Flow switch LD-FS-15, 16
Reactor water cleanup heat exchanger area temperature - high	Temperature monitor LD-MON-1A LD-MON-1B
Reactor water cleanup heat exchanger area Δ temperature high	Temperature monitor LD-MON-1A LD-MON-1B
Reactor water cleanup pump area temperature - high Pump room A Pump room B	Temperature monitor LD-MON-1A LD-MON-1B

Table 7.6-2

Leak Detection System
Instrumentation (Continued)

Function	Instrument[a]
Reactor water cleanup pump area Δ temperature high Pump room A Pump room B	Temperature monitor LD-MON-1A LD-MON-1B
Reactor water cleanup line routing area temperature - high Room 509 Room 511 Room 408 Room 409	Temperature monitor LD-MON-1A LD-MON-1B
Auxiliary steam line area temperature – high	Temperature monitor LD-MON-1A LD-MON-1B
ECCS pump rooms water level – high (See Figure 7.6-2 for a table of each room and level switch)	

[a] Instruments in parentheses are the GE designation.

Table 7.6-3

LPRM System Trips

Trip Function	Trip Action	Trip Setpoint	Trip Action
LPRM downscale	2% to full scale	3%	ODA and annunciator
LPRM upscale	2% to full scale	100%	ODA and annunciator
LPRM bypass	Manual switch		ODA and APRM averaging compensation

Table 7.6-4

Recirculation System Trip Functions

Event	Action				
	A	B	C	D	E
1	X				
2			X		
3	X				X
4	X				
5	X				
6				X	
7		X			
8	X				
9		X			
10					X

Events

1. Suction or discharge block valve less than 90% open.
2. Loss of one ASD channel.
3. Turbine control valve fast closure or stop valve $<$90% open.
4. Trip of one or two operating recirculation pumps.
5. Trip of both operating recirculation pumps.
6. Loss of one feedwater pump plus vessel low level (L4).
7. Temperature difference between the steam dome and the recirculation pump suction temperature less than 10.7°F.
8. Pump motor electrical protection logic is activated.
9. Vessel low level (level 3).
10. Vessel low-low level (level 2) or vessel high pressure (ATWS).

Actions

A. Trip of pump motor 6.9-kV power supply.
B. "Runback" to 15 Hz.
C. "Runback" or limit speed of impacted loop to single channel capability.
D. "Runback" or limit speed to a speed determined within the capability of the remaining feed pump.
E. Trip of RPT breakers (ASD output).

Table 7.6-5

Spent Fuel Pool Cooling and Cleanup System
Instrumentation Specifications

Function	Instrument[a]	Instrument Range
Fuel pool level alarm high	Level switch LS-4, 5	6-1/8 in.
Fuel pool level alarm low/cooling/cleaning isolation	Level switch LS-4, 5	6-1/8 in.
Fuel pool temperature indicator	Temperature indicator TI-7 and TI-88	0-225°F
Surge tank high level alarm	Level indicating switch LIS-1A, LIS-1B	0-400 in. H_2O
Surge tank low level alarm pump shutoff	Level indicating switch LIS-3A2, LIS-3B2	0-400 in. H_2O
Surge tank makeup control valve open	Level indicating switch LIS-3A1, LIS-3B1	0-400 in. H_2O
Surge tank makeup control valve shut	Level indicating switch LIS-2A, LIS-2B	0-400 in. H_2O
Pool return flow indicator	Flow indicator FI-16, FI-17	0-1200 gpm
Pool return water temperature indicator	Temperature indicator TI-6	0-225°F
Pump suction pressure low shutoff	Pressure switch PS-6A, PS-6B	4-75 psig
Pump discharge pressure low alarm/standby pump start	Pressure switch PS-9A, PS-9B	20-180 psig
Return flow to pool controller	Differential pressure indicator controller DPIC-1	0-100 psid
F/D bypass AOV control	Differential pressure indicator controller DPIC-11	0-130 psid
F/D bypass MOV control	Differential pressure indicating switch DPIS-12	0-130 psig
Fuel pool high temperature alarm	Temperature switch TS-7, TS-8	0-225°F

[a] All instruments prefixed - FPC

Table 7.6-6

Channels Required for Protective Action Completion for the Spent Fuel Pool Cooling and Cleanup System

Instrument Channel	Channels Provided	Minimum Channels Required
Fuel pool level alarm - high	2	1
Fuel pool level alarm - low	2	1
Fuel pool temperature high alarm/indicator	2	1
Surge tank level high	2	1
Surge tank level low	2	1
Fuel pool return flow indicator	2	1
FPC Recirculation pump suction pressure low/pump shut off	1 per pump	1 per pump
FPC Recirculation pump discharge pressure low alarm/standby pump start	1 per pump	1 per pump

Table 7.6-7

Suppression Pool Temperature
Monitoring Instrumentation

Function	Instrument
Monitor suppression pool temperature	Thermocouple SPTM-TE-1A, 1B through 8A, 8B; 9 through 16
Temperature recorder	Multipen recorder CMS-TR-5, CMS-TR-6
Average temperature indicator	SPTM-TI-5

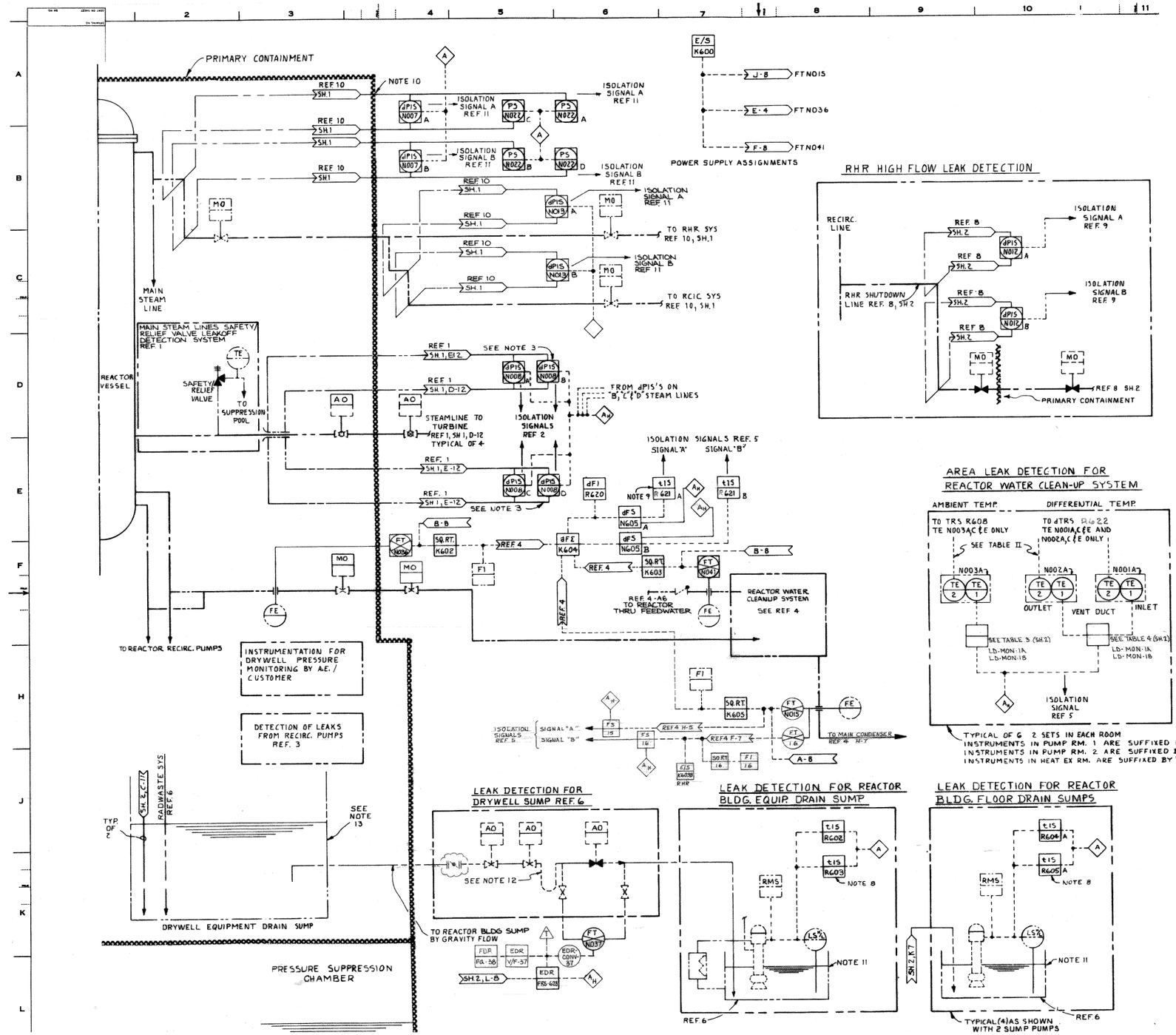

RHR HIGH FLOW LEAK DETECTION

AREA LEAK DETECTION FOR REACTOR WATER CLEAN-UP SYSTEM

NOTES:

1. REMOVED.
2. REMOVED.
3. TYPICAL ARRANGEMENT SHOWN ON STEAM LINE "A". FOR STEAM LINES B,C & D THE dPIS'S ARE NUMBERED N009A,B,C,D N010A,B,C,D & N011A,B,C,D RESPECTIVELY.
4. FOUR TEMPERATURE ELEMENTS SHALL BE EQUALLY SPACED IN THE VERTICAL DIRECTION OF THE DRYWELL.
5. INSTRUMENT LINE VALVING MUST COMPLY WITH INSTRUMENT PIPING STANDARD REF. 14.
6. FOR LOCATION AND IDENTIFICATION OF INSTRUMENTS SEE INSTRUMENT DATA SHEETS REF 15
7. ALL ALARMS SHALL BE LOCATED IN MAIN CONTROL ROOM ON LEAK DETECTION PANEL.
8. ONE tIS IS USED TO MEASURE SUMP FILLUP TIME AND THE SECOND tIS IS MONITORING SUMP PUMPOUT TIME.
9. DELAY TIMER SHALL BE PROVIDED TO OVERRIDE THE ISOLATION SIGNAL DURING THE SYSTEM SHOCK (e.g. PUMP STARTUP OR FILTER DEMINERALIZER OPERATION, ETC).
10. PROVISIONS FOR CONTAINMENT INSTRUMENTATION LINES ISOLATION BY CUSTOMER.
11. IT IS RECOMMENDED THAT THE SUMP BE SIZED SO THAT EACH 5 TO 10 GALLONS RAISES THE LEVEL 1 INCH.
12. AE SHALL PROVIDE DRAIN SEAL LOOP TO SEPARATE DRYWELL ATMOSPHERE FROM REACTOR BUILDING. THE SEAL DESIGN SHALL CONSIDER ISOLATION SIGNAL, DRYWELL PRESSURE RISE, AND ISOLATION VALVES RESPONSE TIME.
13. AE SHALL PROVIDE MEANS OF COOLING THE CONTENTS OF THE DRYWELL EQUIPMENT DRAIN SUMP BASED ON 25 GPM LEAKAGE.
14. PRESSURE INTEGRITY CLASSIFICATION OF LEAK-OFF LINE SHOULD CORRESPOND TO THE CLASSIFICATION OF THE LEAK-OFF VALVE AND CO WITH SUPP. DOC. -3.
15. TEMPERATURE ELEMENTS SHALL BE PLACED ALONG THE MAIN STEAM LIN APPROXIMATELY 36 INCHES ABOVE THE STEAM LINE. TEMPERATURE DET SHALL BE LOCATED OR SHIELDED SO THAT THE DETECTOR IS SENSITIV THE AIR TEMPERATURE AND NOT THE RADIATED HEAT FROM HOT EQUIPM
16. DELETE

REFERENCE DOCUMENTS:

1.	NUCLEAR BOILER P&ID	B22-1010
2.	NUCLEAR BOILER FCD	B22-1030
3.	REACTOR RECIRC SYSTEM P&ID	B35-1010
4.	REACTOR WATER CLEANUP SYS P&ID	G33-1010
5.	REACTOR WATER CLEANUP SYS FCD	G33-1020
6.	RADWASTE SYSTEM P&ID	G11-1010
7.	RADWASTE SYSTEM PD	G11-1020
8.	RHR SYSTEM P&ID	E12-1010
9.	RHR SYSTEM FCD	E12-1030
10.	RCIC SYSTEM P&ID	E51-1010
11.	RCIC SYSTEM FCD	E51-1030
12.	HIGH PRESS. CORE SPRAY SYSTEM P&ID	E22-1010
13.	LEAK DETECTION SYSTEM DESIGN SPEC.	E31-4010
14.	LOW PRESS. CORE SPRAY SYSTEM P&ID	E21-1010
15.	LEAK DETECTION SYSTEM IDS	E31-3050

SUPPORTING DOCUMENTS:

1.	DRYWELL COOLING SYSTEM DESIGN SPEC	A62-4200
2.	PROCESS INSTRUMENT PIPING & TUBING DESIGN SPEC.	A62-4070
3.	PRESS. INTEGRITY OF PIPING & EQUIP PRESSURE PARTS DESIGN SPEC.	A62-4030
4.	PIPING & INSTRUMENT SYMBOLS	A42-1010

Columbia Generating Station
Final Safety Analysis Report

Leak Detection System

Draw. No. 02E31-04,2,1 | Rev. 18 | Figure 7.6-1.1

TABLE 11
EQUIPMENT AREA TEMPERATURE MONITORING

AREA MONITORED	AMBIENT TEMPERATURE TE	AMBIENT TEMPERATURE TR POINT NO.	AMBIENT TEMPERATURE ALARM GROUPING	DIFFERENTIAL TEMPERATURE TE INLET	DIFFERENTIAL TEMPERATURE TE OUTLET	DIFFERENTIAL TEMPERATURE dTR POINT NO.	DIFFERENTIAL TEMPERATURE ALARM GROUPING
STEAM PIPE TUNNEL	N031A	R608-1	1	N029A	N030A	R611-1/2	1
PRIMARY CONTAINMENT	N017A B C D	R608-2 3 4 5	2	N020	N019	R624-11/12	4
RHR EQUIP. ROOM 1	N018A	R608-6	3	N027A	N028A	R611-3/4	3
RHR EQUIP. ROOM 2	N018C	R608-7		N027C	N028C	R611-3/4	
RCIC EQUIP AREA	N004A	R608-9	4	N005A	N006A	R624-9/10	3
RWCU PUMP ROOM 1 RWCU PUMP ROOM 2 RWCU HX ROOM	N003A N003C N003E	R608-10 R608-11 R608-12	5	N001A N001C N001E	N002A N002C N002E	R622-1/2 R622-3/4 R622-5/6	2
TURBINE BLDG	N042A	R608-13	6				
TURBINE BLDG	N043A	R608-14					
TURBINE BLDG	N044A	R608-15					
TURBINE BLDG	N045A	R608-16					
TURBINE BLDG	N046A	R608-17					
TURBINE BLDG	N047A	R608-18					
TURBINE BLDG	N048A	R608-19					
TURBINE BLDG	N049A	R608-20					
TURBINE BLDG	N050A	R608-21					
TURBINE BLDG	N051A	R608-22					
TURBINE BLDG	N052A	R608-23					
TURBINE BLDG	N053A	R608-24					
RWCU/RCIC PIPE ROUTING	N024A N024C N024E N024G	R624-2 R624-3 R624-4 R624-5	1				
RWCU/RCIC PIPE ROUTING RM 313	N024J	R624-6					
UPPER RHR HX ROOM A	N018E	R608-27	8				
LOWER RHR HX ROOM A	N018G	R608-28					
UPPER RHR HX ROOM B	N018J	R608-29					
LOWER RHR HX ROOM B	N018L	R608-30					

TABLE 1

THE FOLLOWING VALVES INSIDE THE DRYWELL ARE EQUIPPED WITH VALVE STEM LEAK-OFF. TYPICAL ARRANGEMENT SHOWN.

VALVES WITH LEAK-OFF	LOCATION	TEMP ELEMENT	TR POINT NO.	ALARM SWITCH
B35-F060A	REF 3, SHT 1, B-3	N016G	R608-25	7
B35-F060B	REF 3, SHT 1, B-3	N016H	R608-26	

TABLE 3 (AMBIENT TEMP)

THERMOCOUPLE	MONITOR
E31-N003A,C,E	LD-MON-1A
E31-N003B,D,F	LD-MON-1B
E31-N004A	LD-MON-1A
E31-N004B	LD-MON-1B
E31-N018A,C,E,G,J,L	LD-MON-2A
E31-N018B,D,F,H,K,M	LD-MON-2B
E31-N024A,C,E,G,J	LD-MON-1A
E31-N024B,D,F,H,K	LD-MON-1B
E31-N031A,B	LD-MON-2A
E31-N031C,D	LD-MON-2B
E31-N042A,B	LD-MON-2A
E31-N042C,D	LD-MON-2B
E31-N043A,B	LD-MON-2A
E31-N043C,D	LD-MON-2B
E31-N044A,B	LD-MON-2A
E31-N044C,D	LD-MON-2B
E31-N045A,B	LD-MON-2A
E31-N045C,D	LD-MON-2B
E31-N046A,B	LD-MON-2A
E31-N046C,D	LD-MON-2B
E31-N047A,B	LD-MON-2A
E31-N047C,D	LD-MON-2B
E31-N048A,B	LD-MON-2A
E31-N048C,D	LD-MON-2B
E31-N049A,B	LD-MON-1A
E31-N049C,D	LD-MON-1B
E31-N050A,B	LD-MON-1A
E31-N050C,D	LD-MON-1B
E31-N051A,B	LD-MON-1A
E31-N051C,D	LD-MON-1B
E31-N052A,B	LD-MON-1A
E31-N052C,D	LD-MON-1B
E31-N053A,B	LD-MON-1A
E31-N053C,D	LD-MON-1B

TABLE 4 (DIFF TEMP)

THERMOCOUPLE	MONITOR
E31-N001A E31-N002A	LD-MON-1A
E31-N001B E31-N002B	LD-MON-1B
E31-N001C E31-N002C	LD-MON-1A
E31-N001D E31-N002D	LD-MON-1B
E31-N001E E31-N002E	LD-MON-1A
E31-N001F E31-N002F	LD-MON-1B
E31-N005A E31-N006A	LD-MON-1A
E31-N005B E31-N006B	LD-MON-1B
E31-N027A E31-N028A	LD-MON-2A
E31-N027B E31-N028B	LD-MON-2B
E31-N027C E31-N028C	LD-MON-2A
E31-N027D E31-N028D	LD-MON-2B
E31-N029A E31-N030A	LD-MON-2A
E31-N029B E31-N030B	LD-MON-2A
E31-N029C E31-N030C	LD-MON-2B
E31-N029D E31-N030D	LD-MON-2B

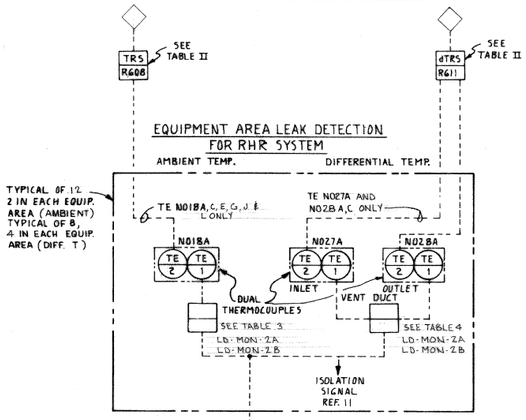

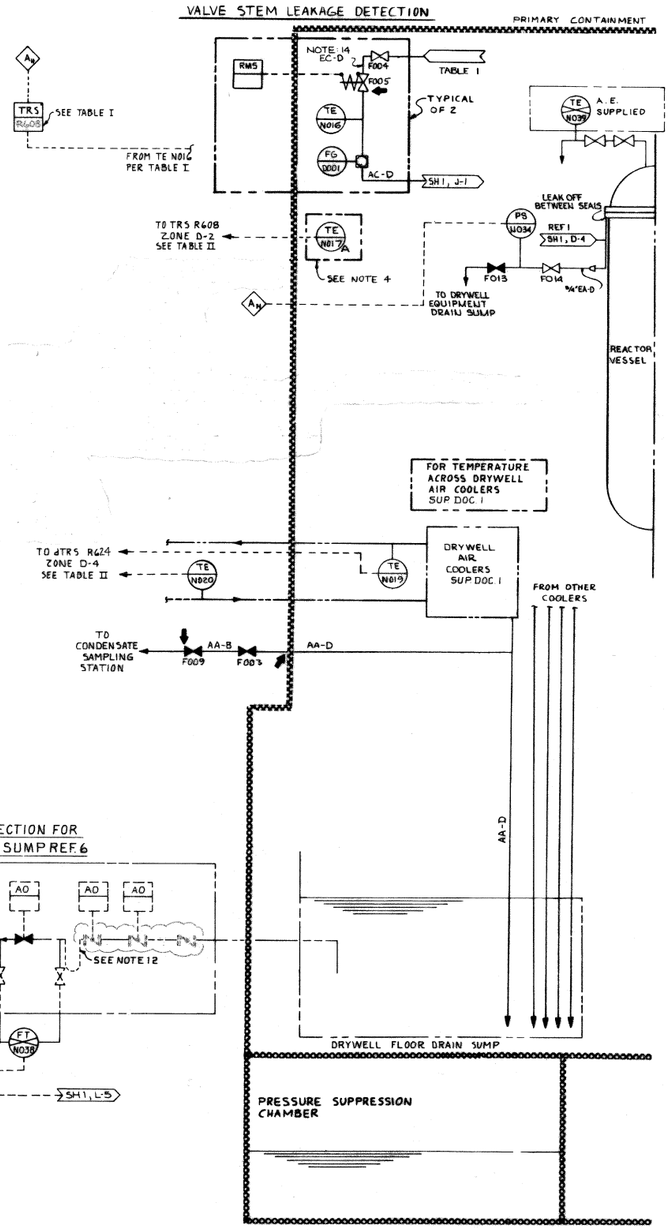

"E"	DIV.	"A"	"B"	ANNUNCIATOR		"C"	"D"
25026	I	FDR-LS-41	INCR LEVEL	RHR PUMP ROOM WATER LEVEL HI	R2	H13-P601 A4 (5-3)	CO 563
25027	II	FDR-LS-42			R1	H13-P601 A2 (2-8)	CO 564
25028	II	FDR-LS-43			R4	H13-P601 A2 (2-6)	CO 565
25029	I	FDR-LS-44		RCIC PUMP ROOM WATER LEVEL HI	R3	H13-P601 A4 (5-7)	CO 566
25030	I	FDR-LS-45		LPCS PUMP ROOM WATER LEVEL HI	R5	H13-P601 A3 (6-4)	CO 567
25031	III	FDR-LS-46		HPCS PUMP ROOM WATER LEVEL HI	R6	H13-P601 A1 (4-7)	CO 568

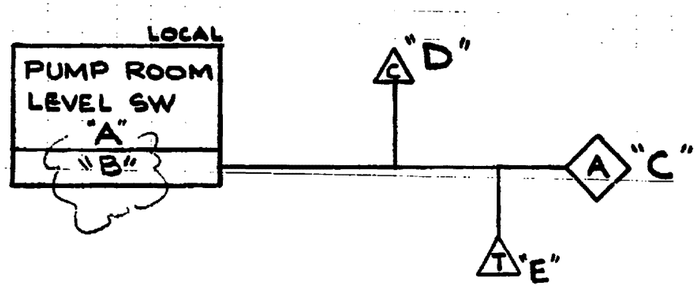

NOTE:
1. REFER TO INSTRUMENT MASTER DATA SHEETS FOR SETPOINT INFORMATION.

For Current Revision See CVI 02C51-04,5,1

Columbia Generating Station **Final Safety Analysis Report**	**Neutron Monitoring System - FCD**		
	Draw. No. 02C51-04,5,1	Rev. 4	Figure 7.6-3.1

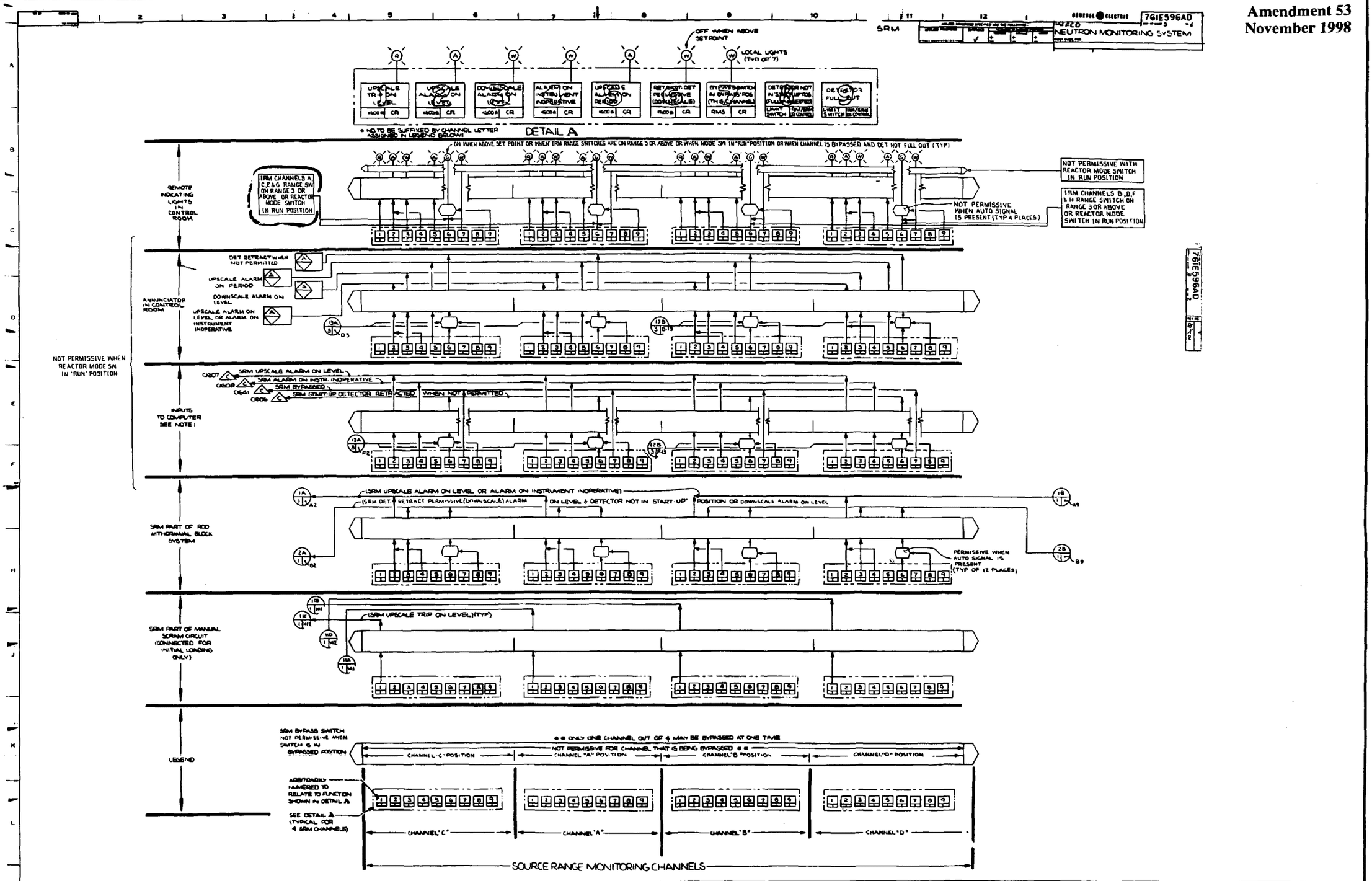

Columbia Generating Station
Final Safety Analysis Report

Neutron Monitoring System - FCD

Draw. No. 02C51-04,5,2	Rev. 3	Figure 7.6-3.2

For Current Revision See CVI 02C51-04,5,4

Columbia Generating Station **Final Safety Analysis Report**	**Neutron Monitoring System - FCD**		
	Draw. No. 02C51-04,5,4	Rev. 1	Figure 7.6-3.3

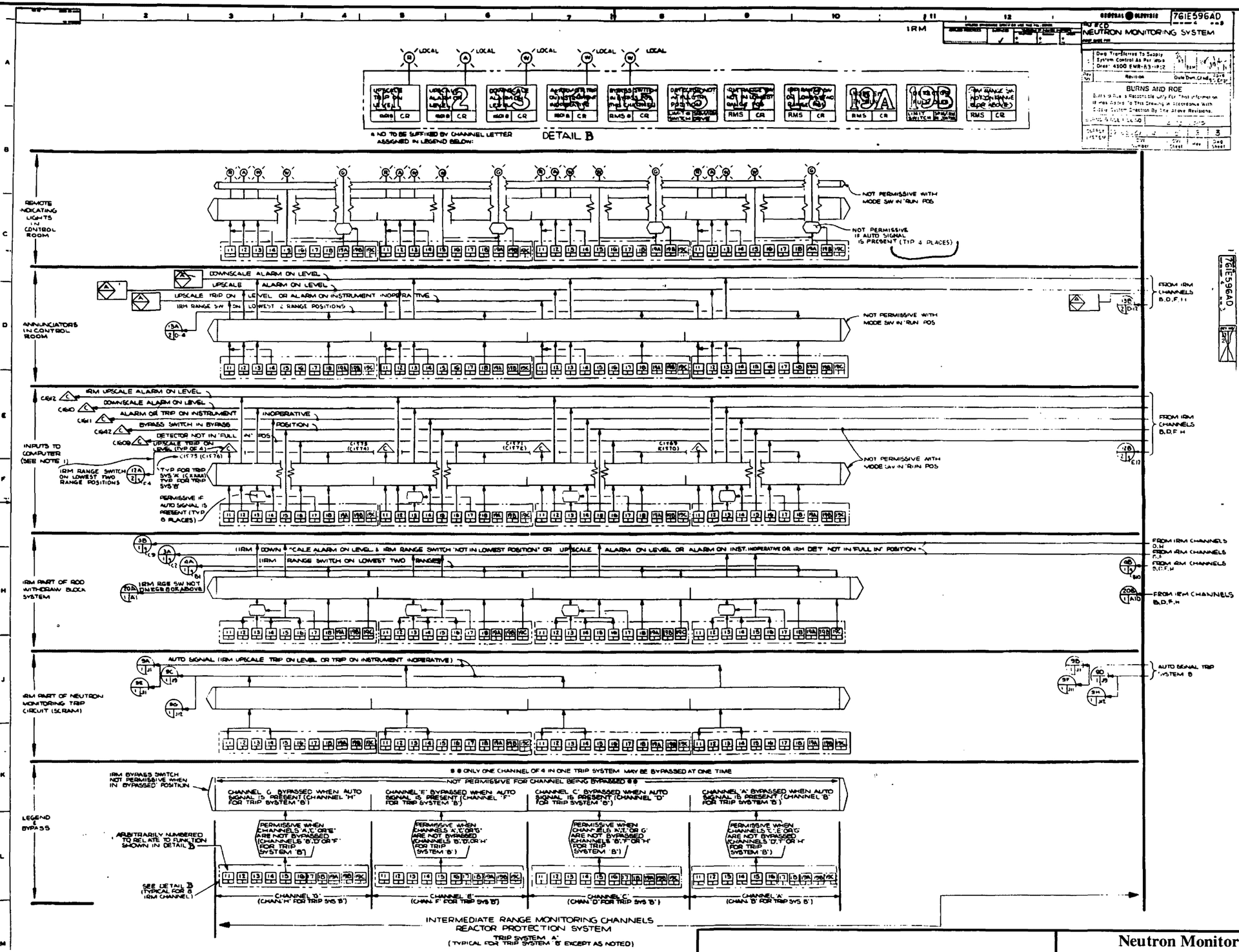
IRM
NEUTRON MONITORING SYSTEM
7GIE596AD
BURNS AND ROE
DETAIL B
LOCAL
REMOTE INDICATING LIGHTS IN CONTROL ROOM
NOT PERMISSIVE WITH MODE SW IN 'RUN' POS
NOT PERMISSIVE IF AUTO SIGNAL IS PRESENT (TYP 4 PLACES)
ANNUNCIATORS IN CONTROL ROOM
DOWNSCALE ALARM ON LEVEL
UPSCALE ALARM ON LEVEL
UPSCALE TRIP ON LEVEL OR ALARM ON INSTRUMENT INOPERATIVE
IRM RANGE SW ON LOWEST 2 RANGE POSITIONS
FROM IRM CHANNELS B,D,F,H
INPUTS TO COMPUTER (SEE NOTE 1)
IRM UPSCALE ALARM ON LEVEL
ALARM OR TRIP ON INSTRUMENT INOPERATIVE
BYPASS SWITCH IN BYPASS
DETECTOR NOT IN 'FULL IN' POS
IRM RANGE SWITCH ON LOWEST TWO RANGE POSITIONS
PERMISSIVE IF AUTO SIGNAL IS PRESENT (TYP 8 PLACES)
IRM PART OF ROD WITHDRAW BLOCK SYSTEM
IRM DOWNSCALE ALARM ON LEVEL & IRM RANGE SWITCH 'NOT IN LOWEST POSITION' OR UPSCALE ALARM ON LEVEL OR ALARM ON INST. INOPERATIVE OR IRM DET. NOT IN 'FULL IN' POSITION
IRM RANGE SWITCH ON LOWEST TWO RANGES
IRM RGE SW NOT IN LOWEST OR ABOVE
FROM IRM CHANNELS B,D,F,H
IRM PART OF NEUTRON MONITORING TRIP CIRCUIT (SCRAM)
AUTO SIGNAL (IRM UPSCALE TRIP ON LEVEL OR TRIP ON INSTRUMENT INOPERATIVE)
AUTO SIGNAL TRIP SYSTEM B
IRM BYPASS SWITCH NOT PERMISSIVE WHEN IN BYPASSED POSITION
ONLY ONE CHANNEL OF 4 IN ONE TRIP SYSTEM MAY BE BYPASSED AT ONE TIME
NOT PERMISSIVE FOR CHANNEL BEING BYPASSED
CHANNEL 'G' BYPASSED WHEN AUTO SIGNAL IS PRESENT (CHANNEL 'H' FOR TRIP SYSTEM 'B')
CHANNEL 'E' BYPASSED WHEN AUTO SIGNAL IS PRESENT (CHANNEL 'F' FOR TRIP SYSTEM 'B')
CHANNEL 'C' BYPASSED WHEN AUTO SIGNAL IS PRESENT (CHANNEL 'D' FOR TRIP SYSTEM 'B')
CHANNEL 'A' BYPASSED WHEN AUTO SIGNAL IS PRESENT (CHANNEL 'B' FOR TRIP SYSTEM 'B')
PERMISSIVE WHEN CHANNELS 'A','C' OR 'E' ARE NOT BYPASSED (CHANNELS 'B','D' OR 'F' FOR TRIP SYSTEM 'B')
PERMISSIVE WHEN CHANNELS 'A','C' OR 'G' ARE NOT BYPASSED (CHANNELS 'B','D' OR 'H' FOR TRIP SYSTEM 'B')
PERMISSIVE WHEN CHANNELS 'A','E' OR 'G' ARE NOT BYPASSED (CHANNELS 'B','F' OR 'H' FOR TRIP SYSTEM 'B')
PERMISSIVE WHEN CHANNELS 'C','E' OR 'G' ARE NOT BYPASSED (CHANNELS 'D','F' OR 'H' FOR TRIP SYSTEM 'B')
ARBITRARILY NUMBERED TO RELATE TO FUNCTION SHOWN IN DETAIL B
SEE DETAIL B (TYPICAL FOR 8 IRM CHANNELS)
CHANNEL 'G' (CHAN 'H' FOR TRIP SYS 'B')
CHANNEL 'E' (CHAN 'F' FOR TRIP SYS 'B')
CHANNEL 'C' (CHAN 'D' FOR TRIP SYS 'B')
CHANNEL 'A' (CHAN 'B' FOR TRIP SYS 'B')
INTERMEDIATE RANGE MONITORING CHANNELS
REACTOR PROTECTION SYSTEM
TRIP SYSTEM 'A'
(TYPICAL FOR TRIP SYSTEM 'B' EXCEPT AS NOTED)
LEGEND
B BYPASS

RBM & LPRM

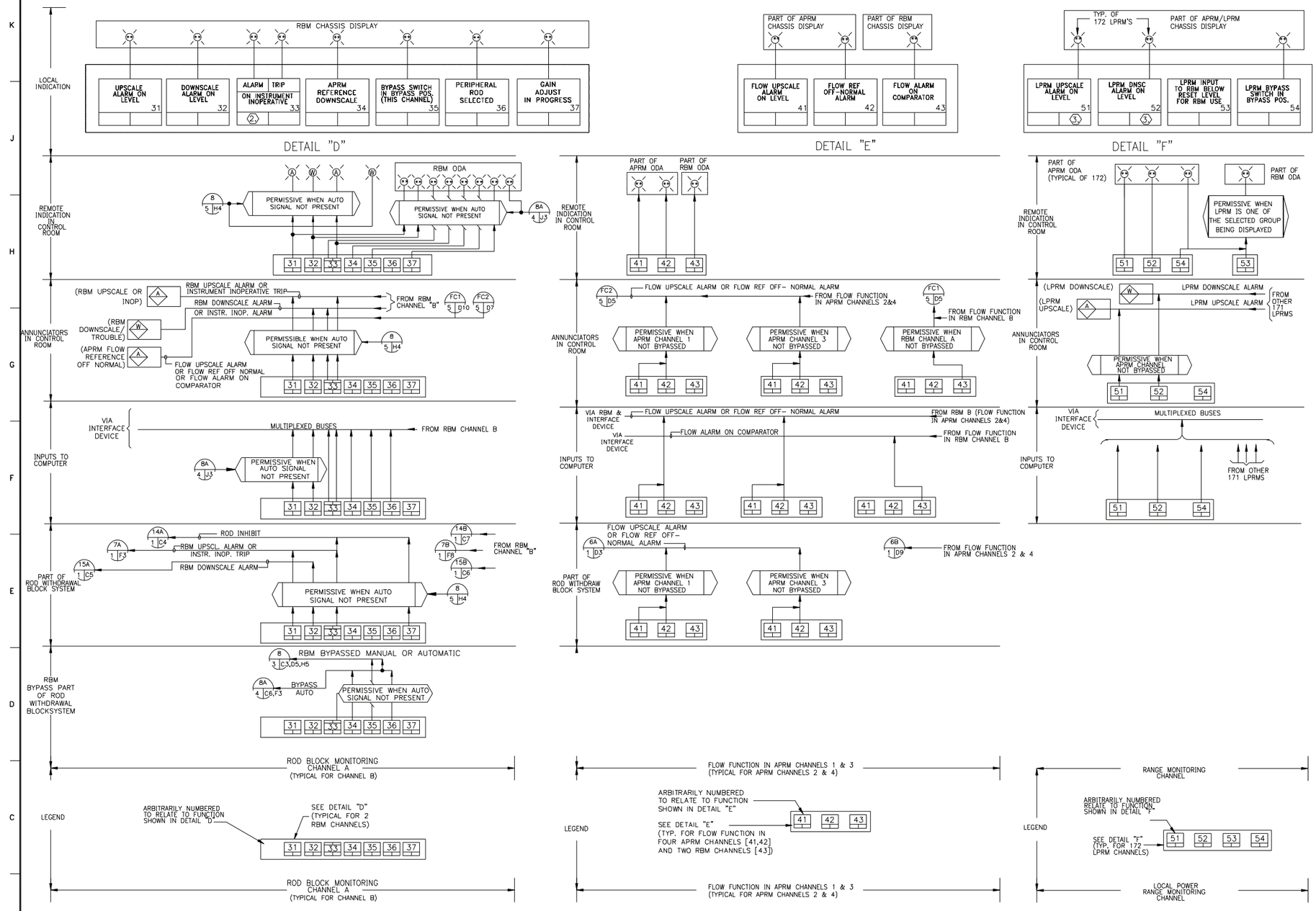

1. ** DENOTES INDICATION AT HEADER AND TRIP MARKERS ABOVE DISPLAY BARGRAPHS
2. ALARM OUTPUT EXISTS IF ANY SELF-TEST FAULT IS DETECTED.
3. FUNCTION IS NOT SET WHEN LPRM IS BYPASSED.

Columbia Generating Station
Final Safety Analysis Report

Neutron Monitoring System - FCD

Draw. No. 02C51-04,5,5	Rev. 2	Figure 7.6-3.5

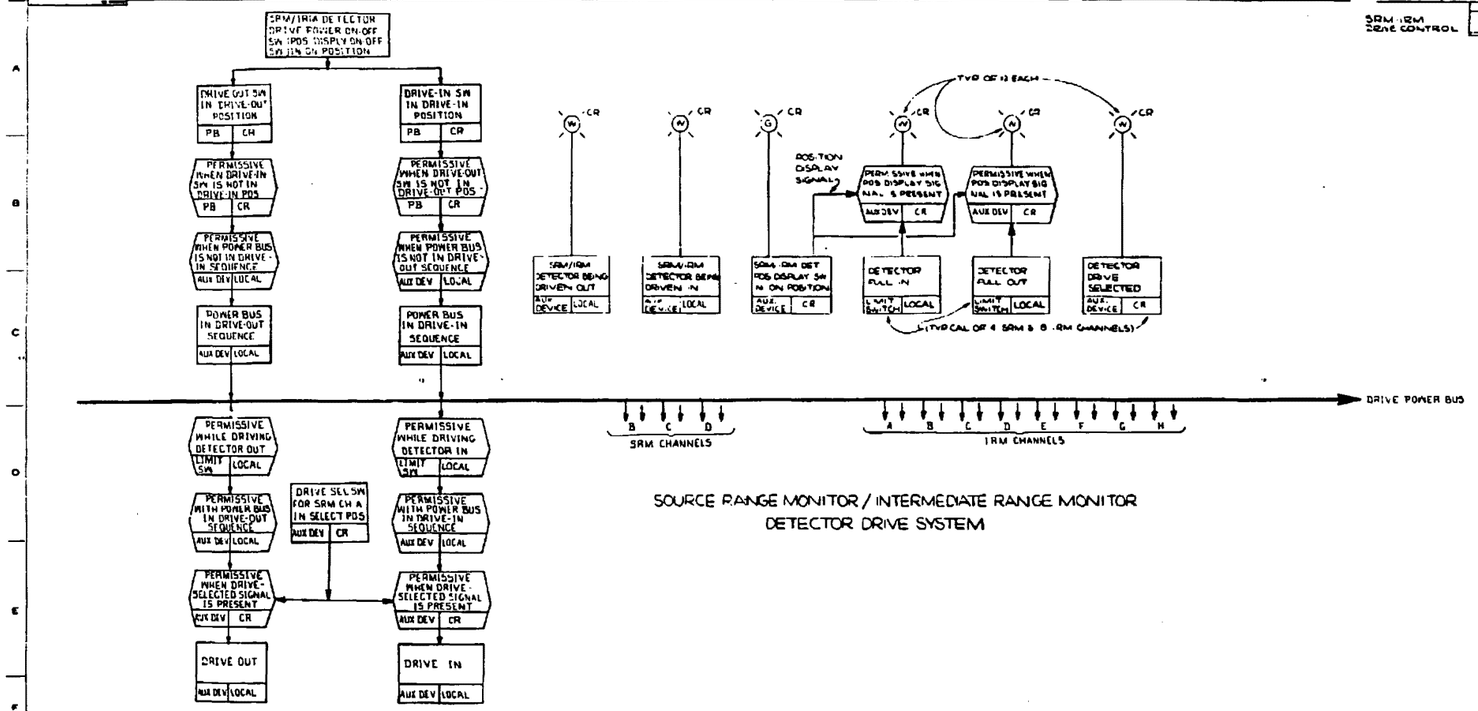
SRM/IRM DETECTOR DRIVE POWER ON-OFF SW
POS DISPLAY ON-OFF SW
IN-IN OUT POSITION
DRIVE OUT SW IN DRIVE-OUT POSITION
PB CR
DRIVE-IN SW IN DRIVE-IN POSITION
PB CR
PERMISSIVE WHEN DRIVE-IN SW IS NOT IN DRIVE-IN POS
PERMISSIVE WHEN DRIVE-OUT SW IS NOT IN DRIVE-OUT POS
PERMISSIVE WHEN POWER BUS IS NOT IN DRIVE-IN SEQUENCE
PERMISSIVE WHEN POWER BUS IS NOT IN DRIVE-OUT SEQUENCE
AUX DEV LOCAL
POWER BUS IN DRIVE-OUT SEQUENCE
POWER BUS IN DRIVE-IN SEQUENCE
PERMISSIVE WHILE DRIVING DETECTOR OUT
PERMISSIVE WHILE DRIVING DETECTOR IN
LIMIT SW LOCAL
PERMISSIVE WITH POWER BUS IN DRIVE-OUT SEQUENCE
PERMISSIVE WITH POWER BUS IN DRIVE-IN SEQUENCE
DRIVE SEL SW FOR SRM CH A IN SELECT POS
AUX DEV CR
PERMISSIVE WHEN DRIVE-SELECTED SIGNAL IS PRESENT
DRIVE OUT
DRIVE IN
SRM CHANNEL A
TYPICAL DETECTOR DRIVE SYSTEM
TYP OF 12 EACH
CR
POSITION DISPLAY SIGNALS
PERMISSIVE WHEN POS DISPLAY SIGNAL IS PRESENT
SRM/IRM DETECTOR BEING DRIVEN OUT
SRM/IRM DETECTOR BEING DRIVEN IN
SRM-IRM DET POS DISPLAY SW IN ON POSITION
DETECTOR FULL IN
DETECTOR FULL OUT
DETECTOR DRIVE SELECTED
AUX DEVICE
(TYP CAL OF 4 SRM & 8 IRM CHANNELS)
DRIVE POWER BUS
B C D
SRM CHANNELS
A B C D E F G H
IRM CHANNELS
SOURCE RANGE MONITOR / INTERMEDIATE RANGE MONITOR
DETECTOR DRIVE SYSTEM
SRM-IRM DRIVE CONTROL
GENERAL ELECTRIC
761E596AD
FCD
NEUTRON MONITORING SYSTEM
761E596AD

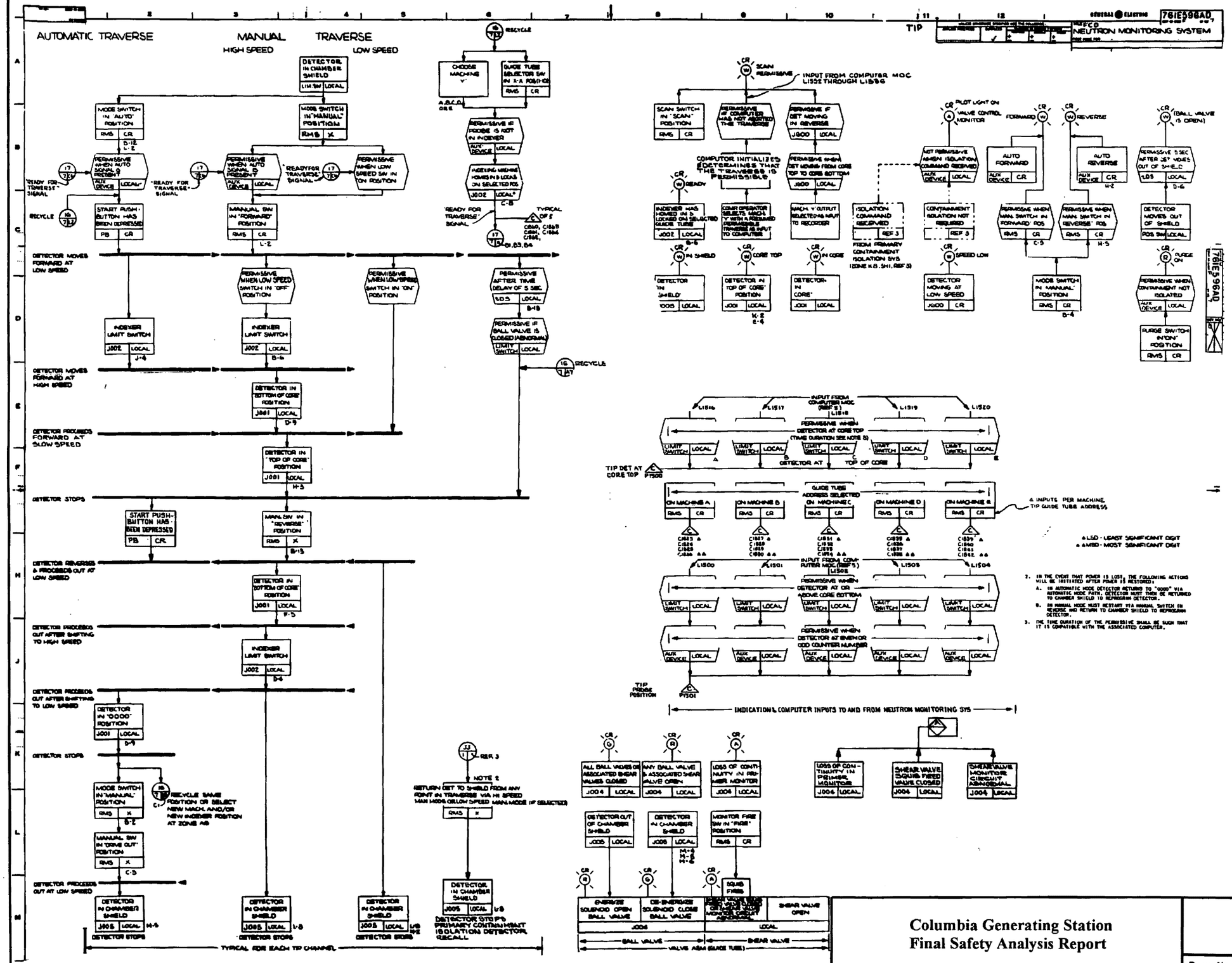

Columbia Generating Station
Final Safety Analysis Report

Neutron Monitoring System - FCD

Draw. No. 02C51-04,5,7 | Rev. 1 | Figure 7.6-3.7

Form No. 960690

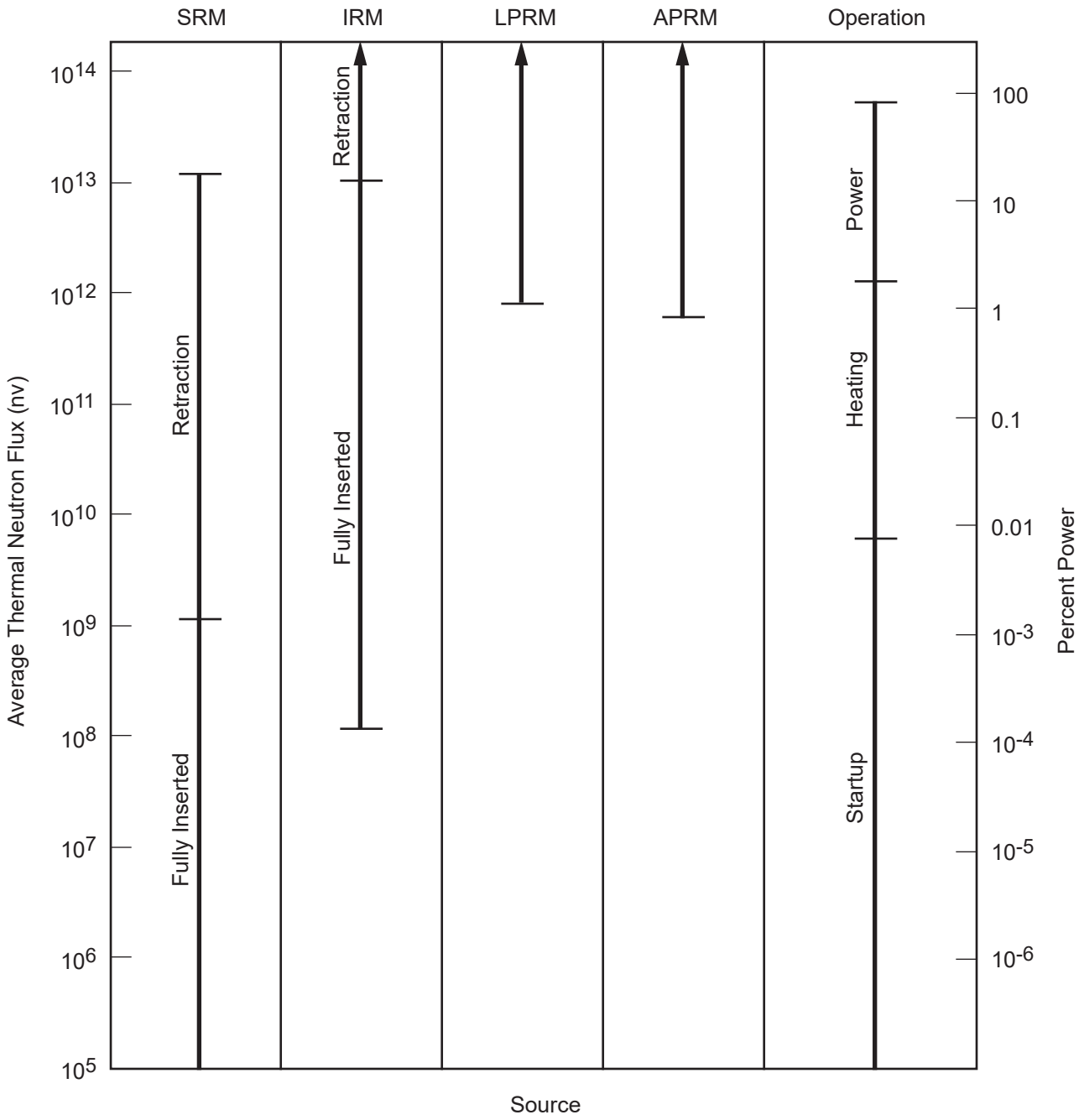

Columbia Generating Station Final Safety Analysis Report	Ranges of Neutron Monitoring System		
	Draw. No. 920843.59	Rev.	Figure 7.6-4

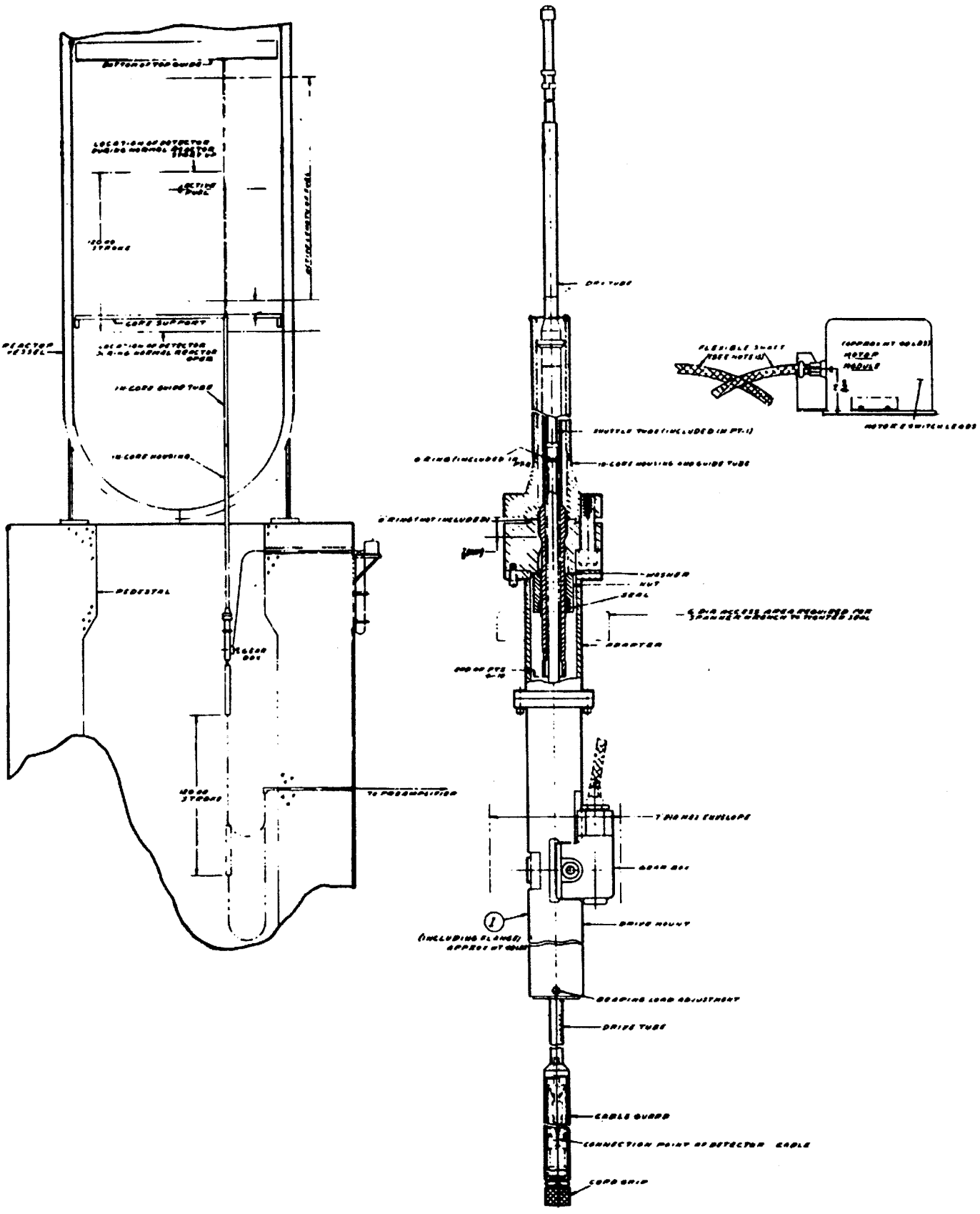

Columbia Generating Station **Final Safety Analysis Report**	**SRM/IRM Neutron Monitoring Unit**		
	Draw. No. **020002.45**	Rev.	Figure **7.6-5**

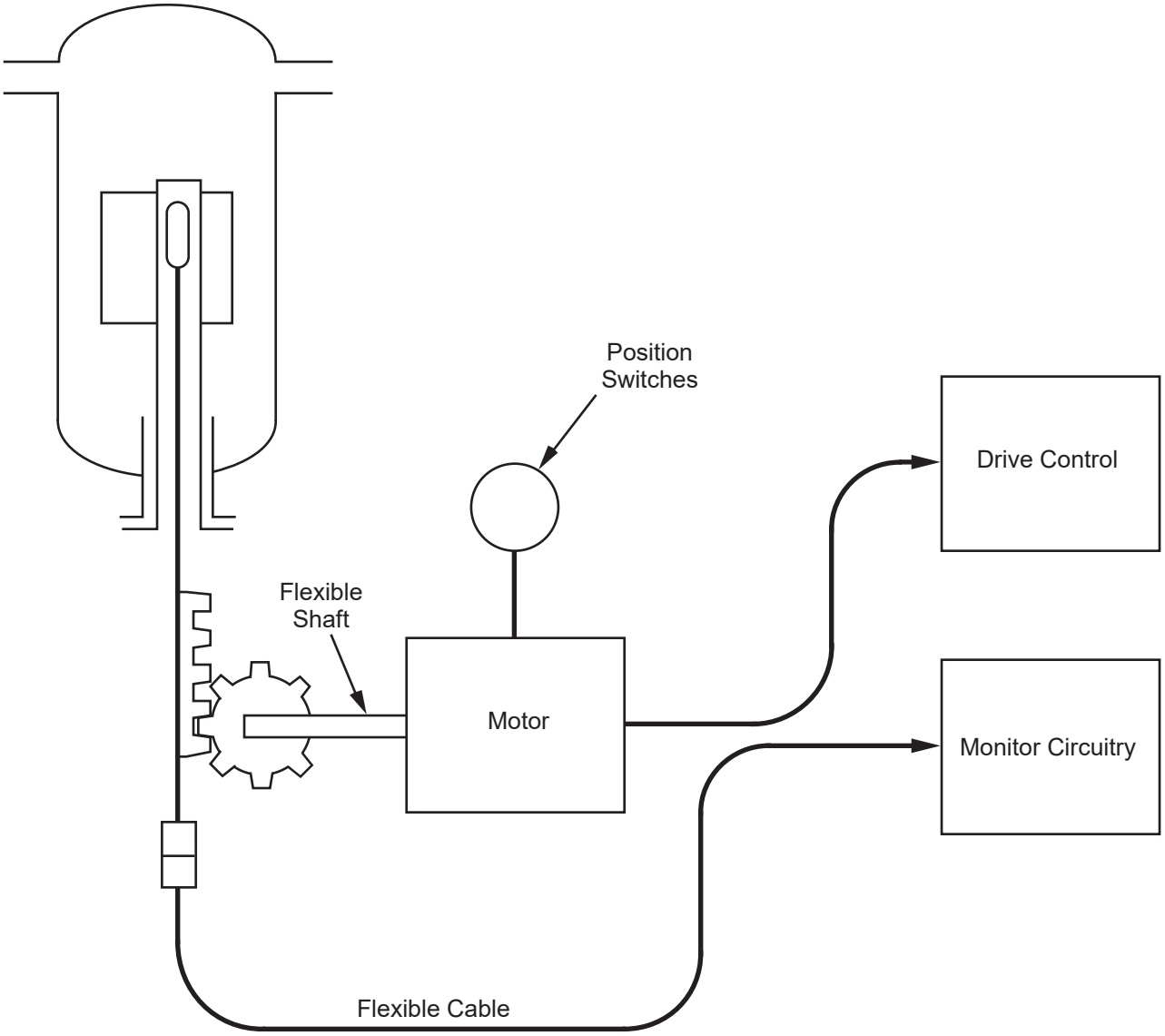

Columbia Generating Station Final Safety Analysis Report	Detector Drive System Schematic		
	Draw. No. 920843.60	Rev.	Figure 7.6-6

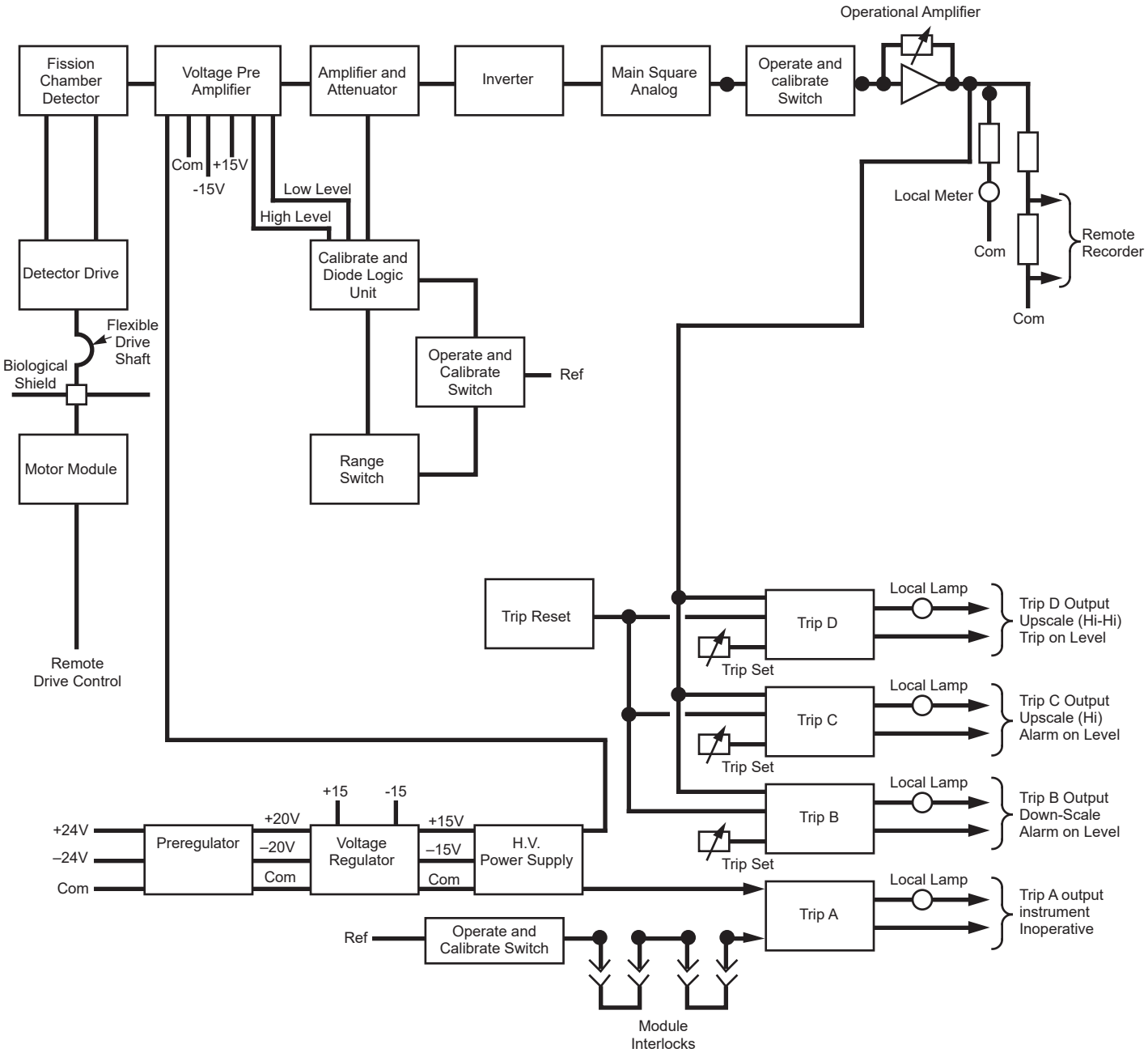

Columbia Generating Station
Final Safety Analysis Report

Functional Block Diagram - IRM Channel

Draw. No. 920843.62	Rev.	Figure 7.6-7

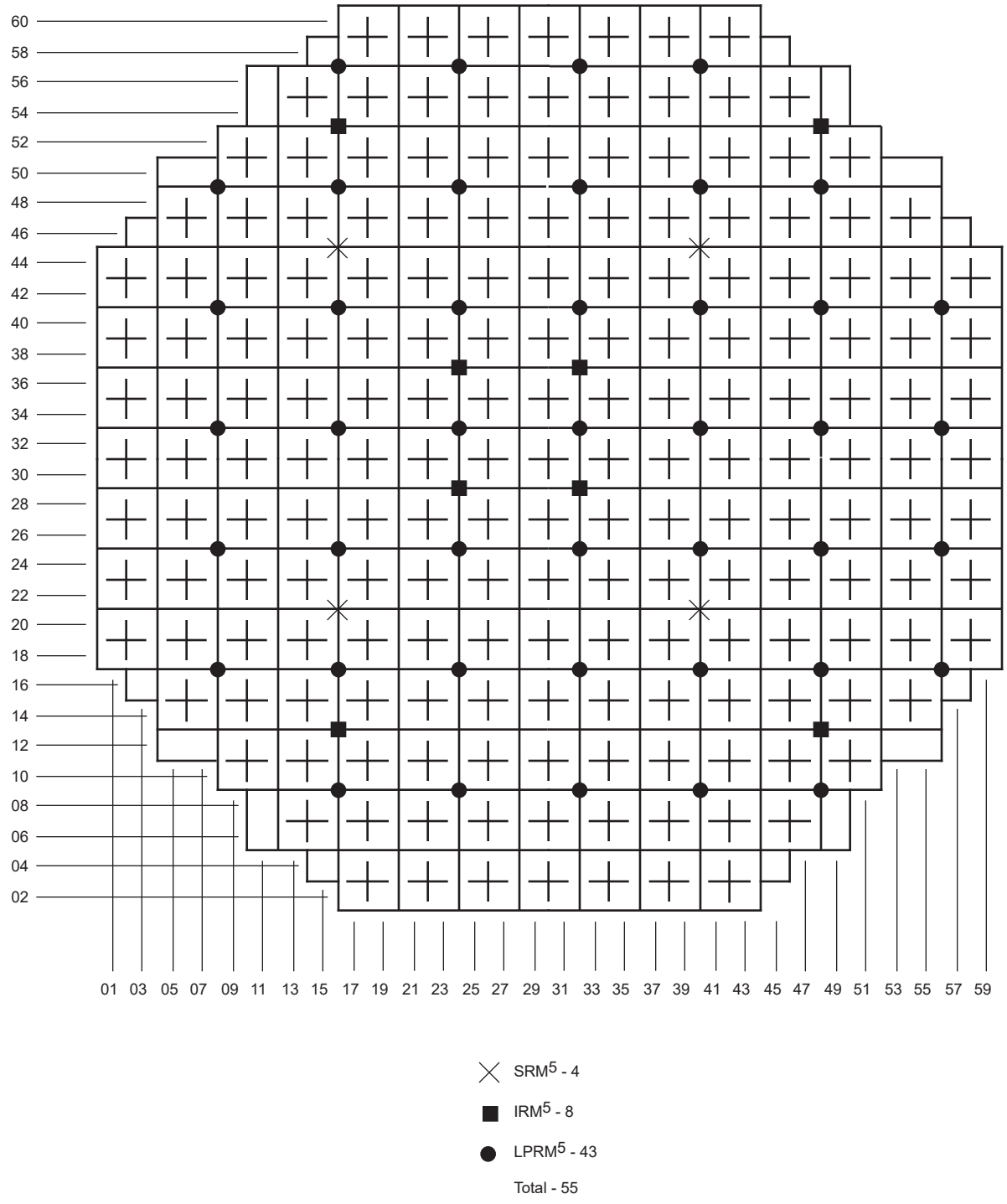

Columbia Generating Station
Final Safety Analysis Report

Vessel Penetrations for Nuclear Instrumentation

Draw. No. 920843.52	Rev.	Figure 7.6-8

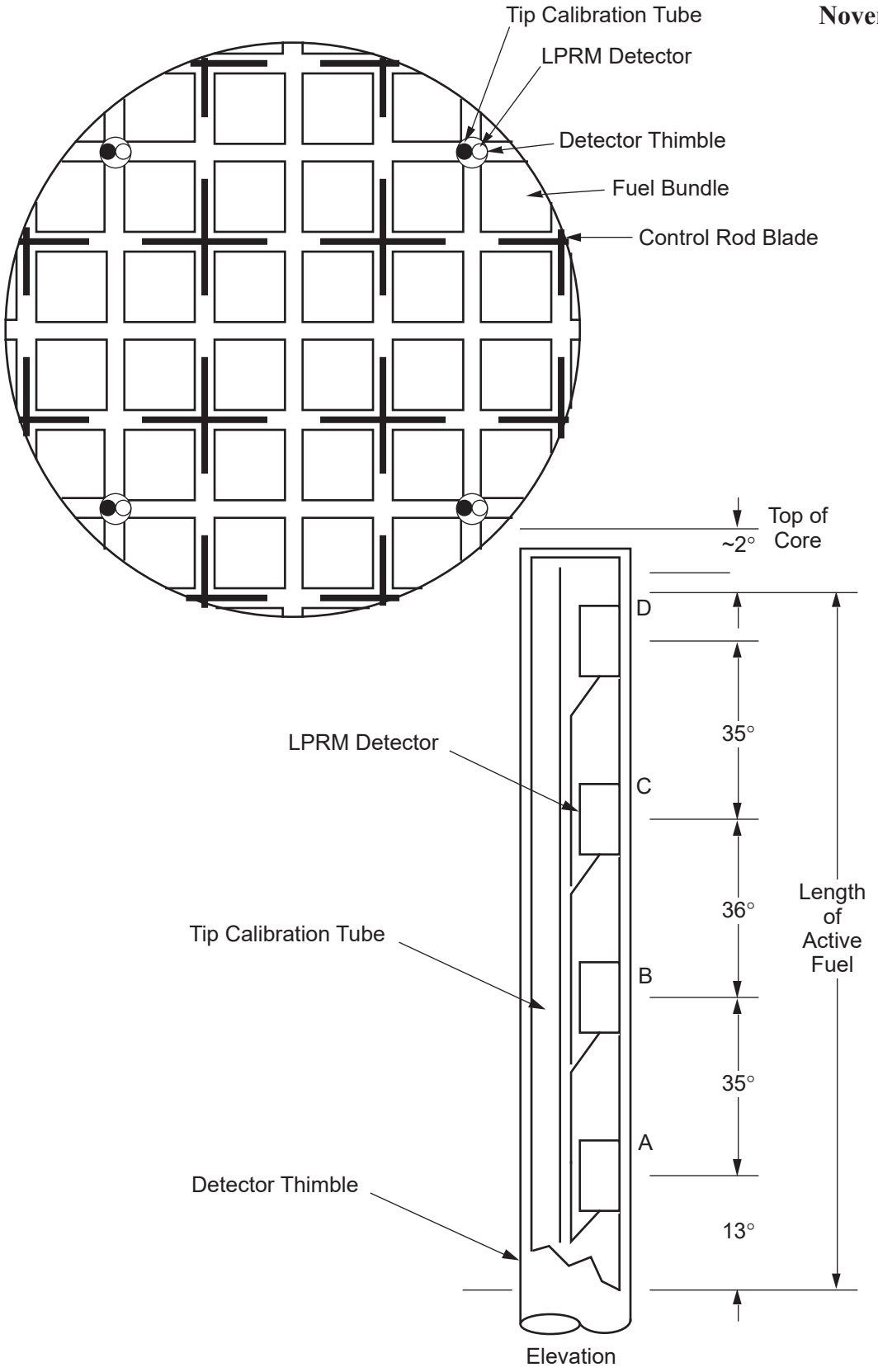

Columbia Generating Station
Final Safety Analysis Report

Power Range Monitor Detector Assembly Location

Draw. No. 920843.63	Rev.	Figure 7.6-9

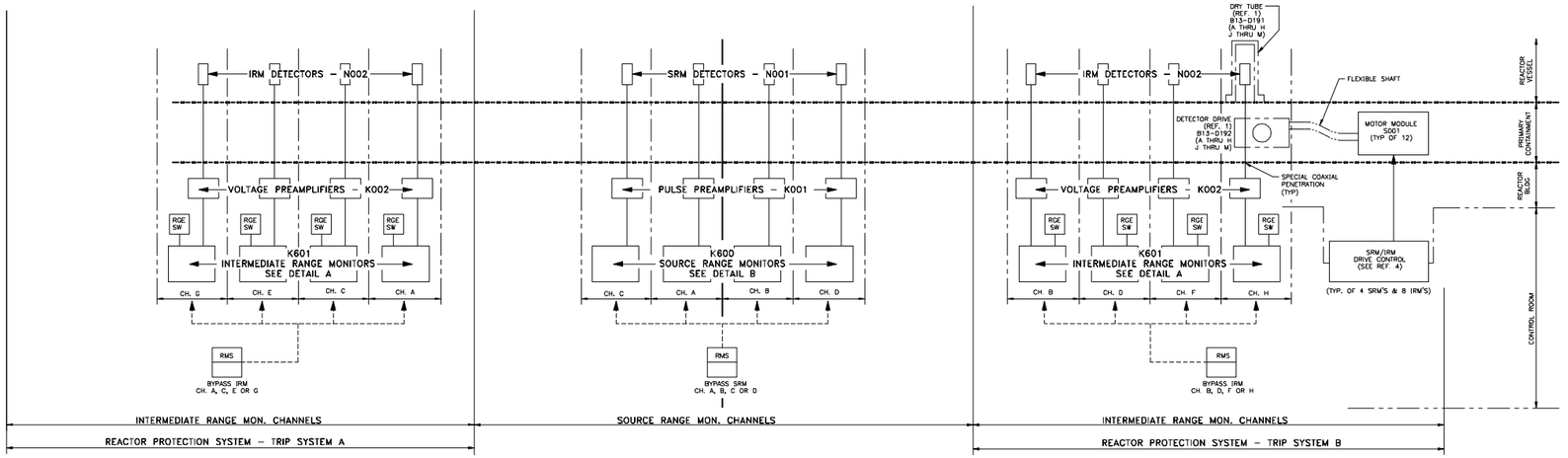

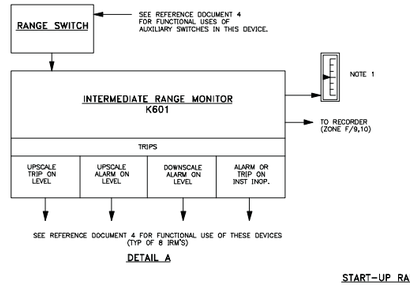

DETAIL A

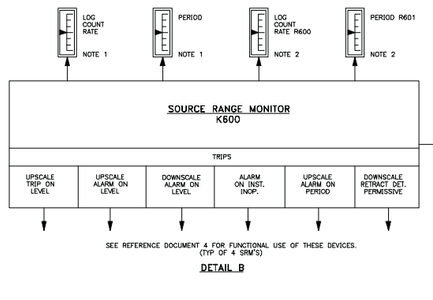

DETAIL B

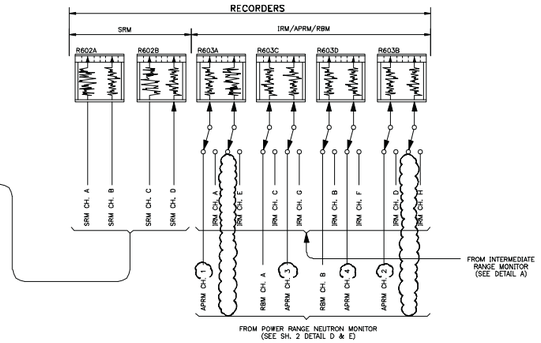

START-UP RANGE NEUTRON MONITORING

ABBREVIATIONS

SRM	SOURCE RANGE MONITOR
IRM	INTERMEDIATE RANGE MONITOR
RBM	ROD BLOCK MONITOR
LPRM	LOCAL POWER RANGE MONITOR
APRM	AVERAGE POWER RANGE MONITOR
TIP	TRAVERSING IN-CORE PROBE
RGE SW	RANGE SWITCH
CH	CHANNEL

LEGEND:

- CONTROL RODS (185)
- SRM DETECTORS (4)
- SRM EMITTING SOURCES (7)
- SRM SPARE EMITTING SOURCE POSITION (7)
- LPRM DETECTOR ASM IN THE POWER RANGE DETECTOR ASM – TRIP SYSTEM "A" (21)
- LPRM DETECTOR ASM IN THE POWER RANGE DETECTOR ASM – TRIP SYSTEM "B" (22)
- IRM DETECTORS (8)

MPL NO.: C51-1010

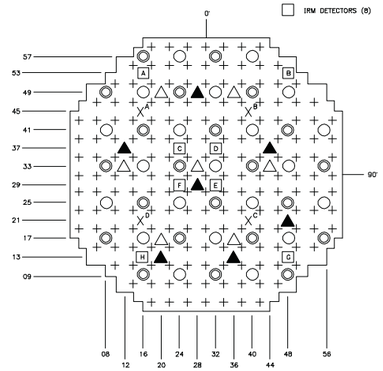

FIGURE 1
DETECTOR & CONTROL ELEMENT ARRANGEMENT
(TOP VIEW OF CORE)

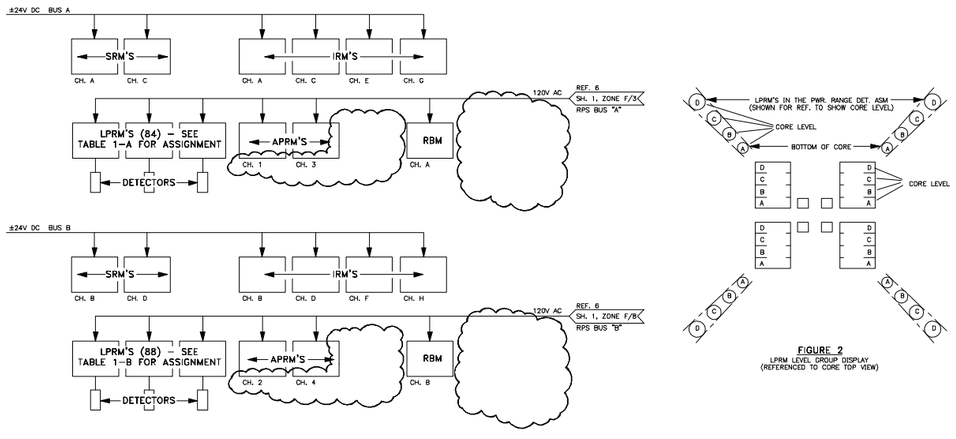

POWER DISTRIBUTION

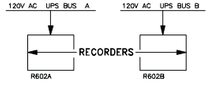

FIGURE 2
LPRM LEVEL GROUP DISPLAY
(REFERENCED TO CORE TOP VIEW)

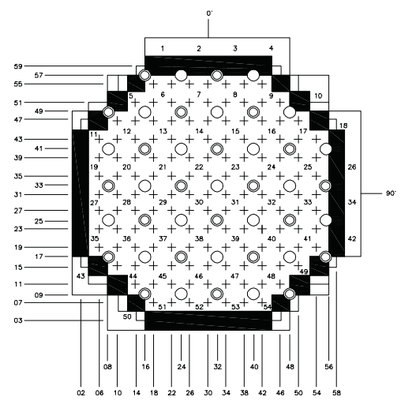

FIGURE 3
(TOP VIEW OF CORE)

WHEN A ROD IS SELECTED IN ANY GROUP, THE LPRM DETECTOR ASSEMBLIES ASSIGNED TO THAT GROUP (SEE FIG. 3) ARE ROUTED VIA THE LPRM TO THE RBM'S SUCH THAT THE "A" & "C" LEVEL DETECTOR SIGNALS GO TO RBM "A" AND THE "B" & "D" LEVEL DETECTOR SIGNALS GO TO RBM "B". WHEN A PERIPHERAL ROD (SHADED IN FIG. 3) IS SELECTED, THE RBM'S ARE AUTOMATICALLY BYPASSED. THE LPRM SIGNALS ARE ROUTED TO THE LPRM LEVEL GROUP DISPLAY AS SHOWN IN FIG. 2. WHEN A DETECTOR ASSEMBLY IS NOT PRESENT IN A GROUP THE CORRESPONDING READOUTS IN THE LPRM LEVEL GROUP DISPLAY WILL BE INDICATED AS BYPASSED.

NOTES:

1. PARTS ARE LOCATED ADJACENT TO OR ON THE SIGNAL CONDITIONING EQUIPMENT PERFORMING THE FUNCTION INDICATED.
2. PART IS LOCATED ON THE MAIN CONTROL ROOM PANEL.
3. POSITION INFORMATION IS INPUT EVERY 1 INCH. FLUX LEVEL INFORMATION IS INPUT EVERY 3 INCHES ON WITHDRAWAL.
4. ALL EQUIPMENT & INSTRUMENTS ARE PREFIXED BY NO. C51 UNLESS OTHERWISE NOTED.
5. FOR LOCATION AND IDENTIFICATION OF INSTRUMENTS SEE INSTRUMENT DATA SHEET LISTED IN MPL FOR EACH INSTRUMENT.
6. DELETED
7. EXCEPT FOR PORT NO. 10, THE EXACT ASSIGNMENT OF TIP GUIDE TUBES FROM SPECIFIC INDEXING MECHANISMS TO SPECIFIC POWER RANGE DETECTOR ASSEMBLIES IN RESPECTIVE GROUPS SHOWN IS DETERMINED BY OTHERS.
8. APRM CHANNEL "C" OUTPUT SIGNAL SHALL GO TO THE RECIRC SYSTEM EXCEPT WHEN CHANNEL "C" IS BYPASSED APRM "E" SIGNAL SHALL AUTOMATICALLY GO TO THE RECIRC SYSTEM.

REFERENCE DOCUMENTS:

		MPL ITEM NO.
1.	REACTOR ASSEMBLY ARRANGEMENT	B13-2010
2.	REACTOR RECIRCULATION SYS. – P&ID	B33-1010
3.	CONTROL ROD HYDRAULIC SYS. – FCD	C12-1010
4.	NEUTRON MONITORING SYS. – FCD	C51-1020
5.	DESIGN SPECIFICATION	C51-4010
6.	REACTOR PROTECTION SYS. IED	C72-C010

FSAR FIG.

Columbia Generating Station
Final Safety Analysis Report

Neutron Monitoring System - IED

Draw. No. 02C51-04,7,1 | Rev. 4 | Figure 7.6-10.1

For Current Revision See CVI 02C51-04,7,2

Columbia Generating Station **Final Safety Analysis Report**	**Neutron Monitoring System - IED**		
	Draw. No. 02C51-04,7,2	Rev. 2	Figure 7.6-10.2

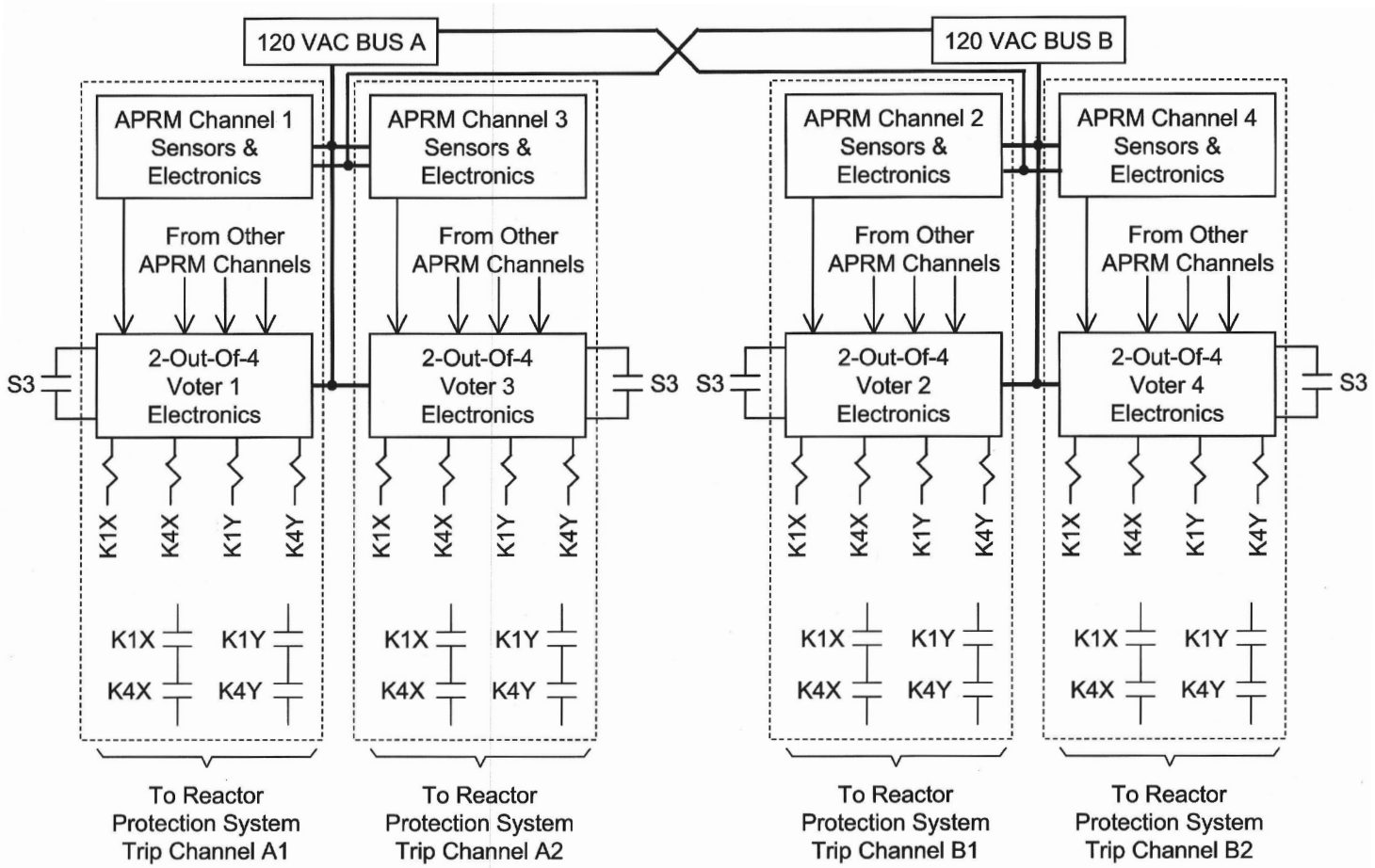

NOTE
Relay Contacts shown in tripped position.

LEGEND
K1X, K1Y: (APRM Neutron Flux – High or APRM Simulated Thermal Power – High or APRM Inop) and (APRM Not Bypassed)
K4X, K4Y: (OPRM Trip or APRM Inop) and (APRM Not Bypassed)
S3: APRM Bypass Switch

Columbia Generating Station Final Safety Analysis Report	APRM Circuit Arrangement for Reactor Protection System Input		
	Draw. No. 920843.64	Rev. 1	Figure 7.6-11

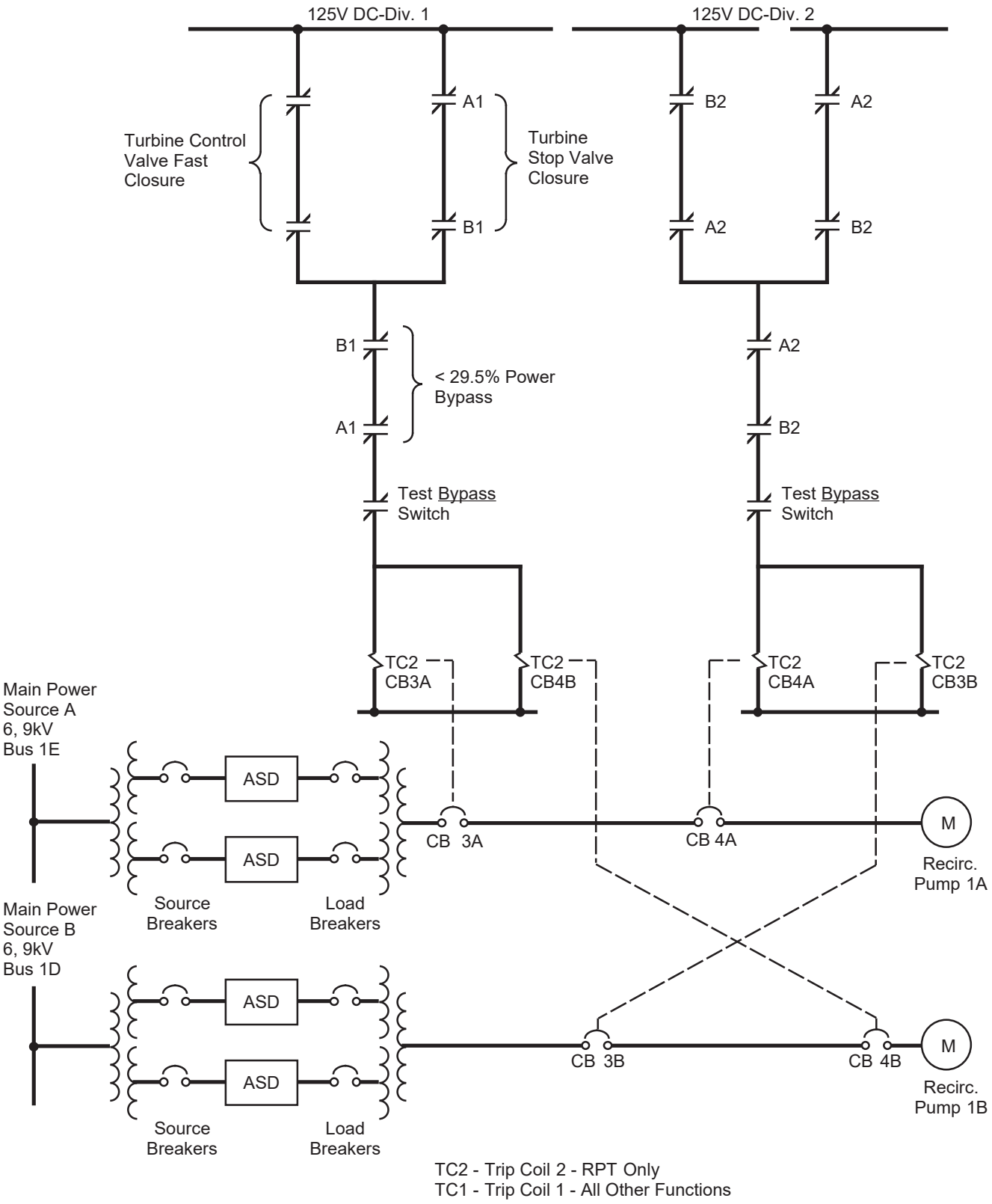

Columbia Generating Station
Final Safety Analysis Report

Recirculation Pump Trip Logic Diagram

Draw. No. 960690.31	Rev.	Figure 7.6-12

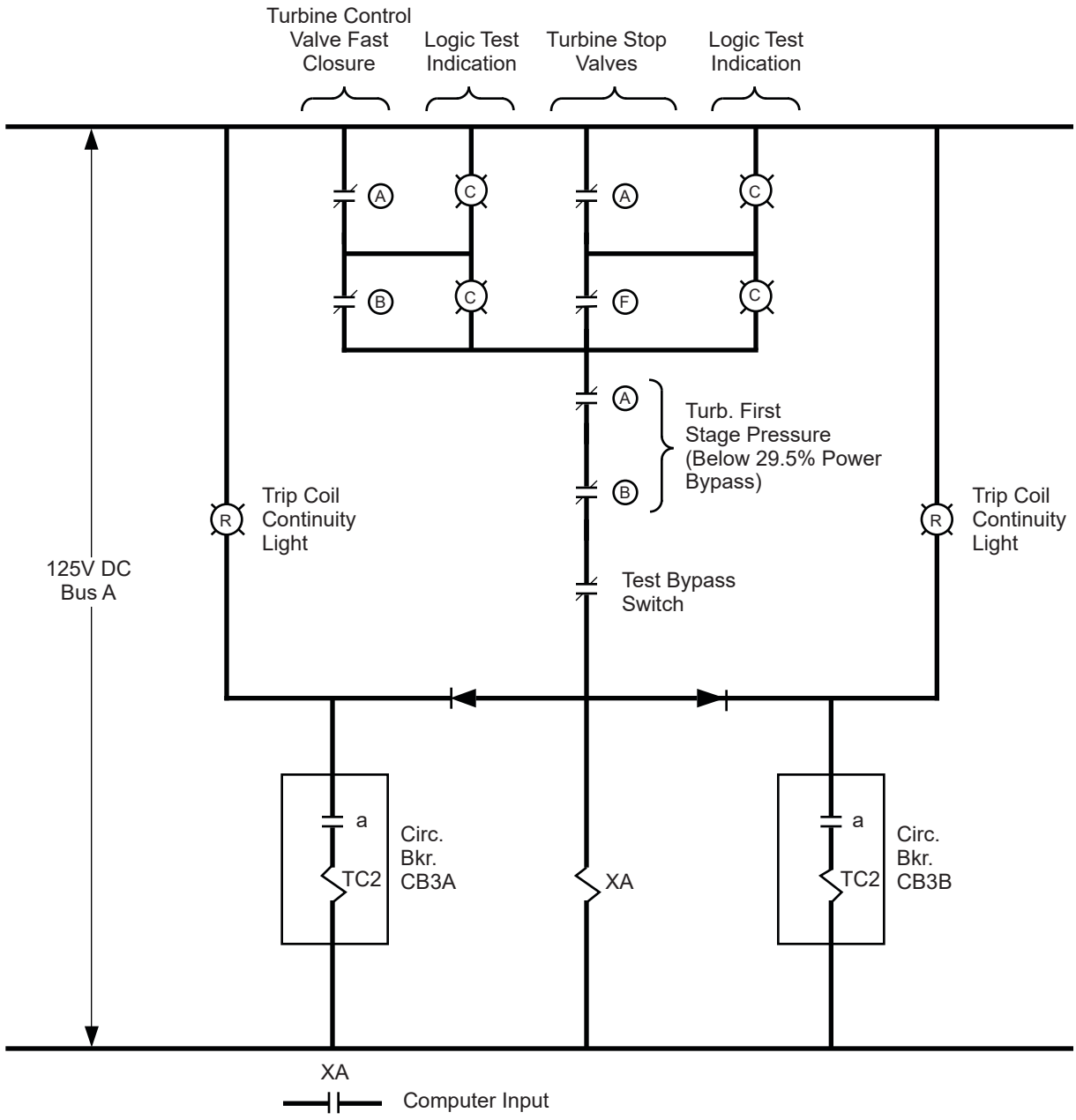

Columbia Generating Station Final Safety Analysis Report	Recirculation Pump Trip System A		
	Draw. No. 960690.30	Rev.	Figure 7.6-13

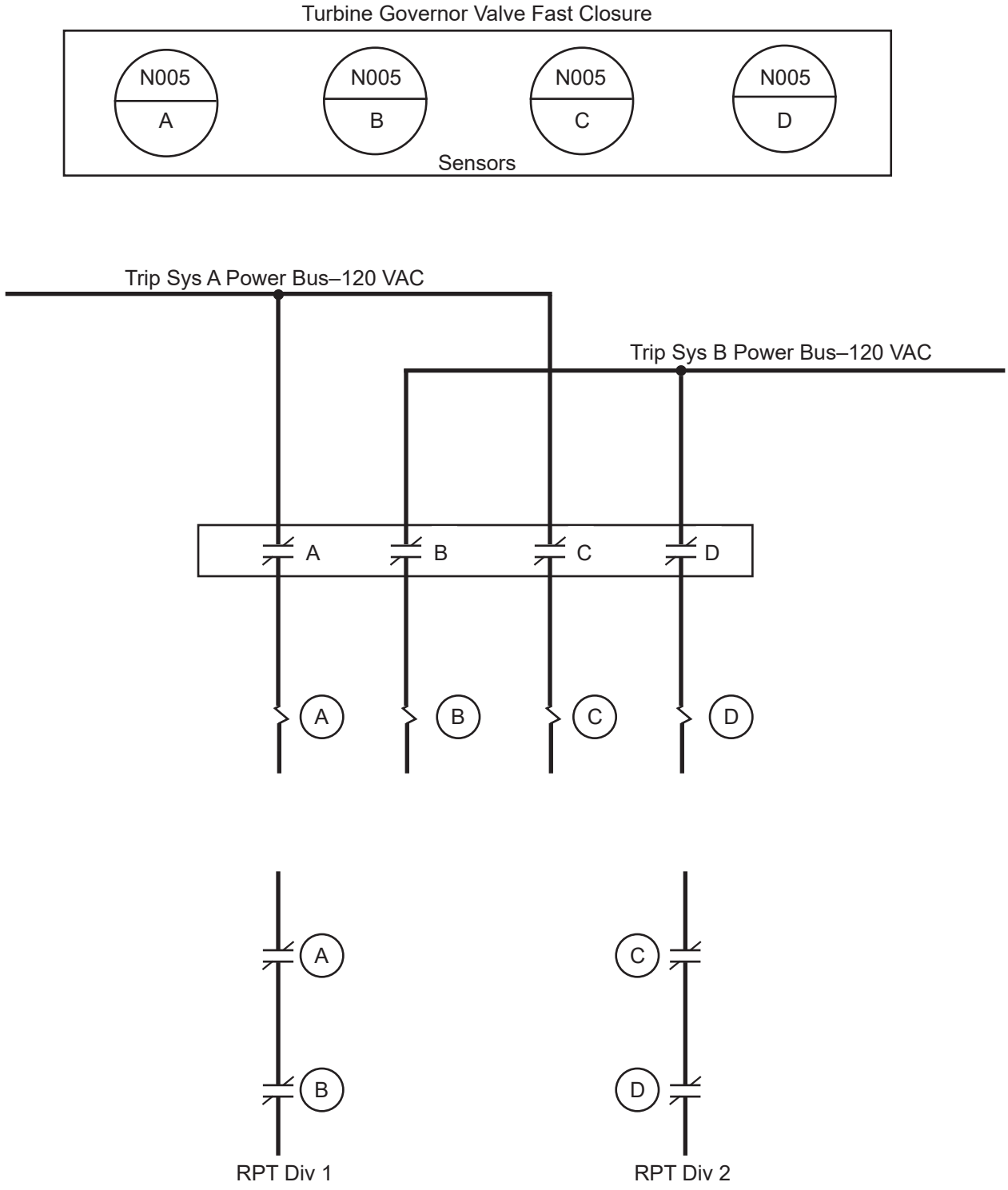

Typical for: Turbine First Stage Pressure
Switches N003A, B, C, D

Columbia Generating Station **Final Safety Analysis Report**	**Turbine Governor Valve Fast Closure Sensors**		
	Draw. No. **920843.65**	Rev.	Figure **7.6-14**

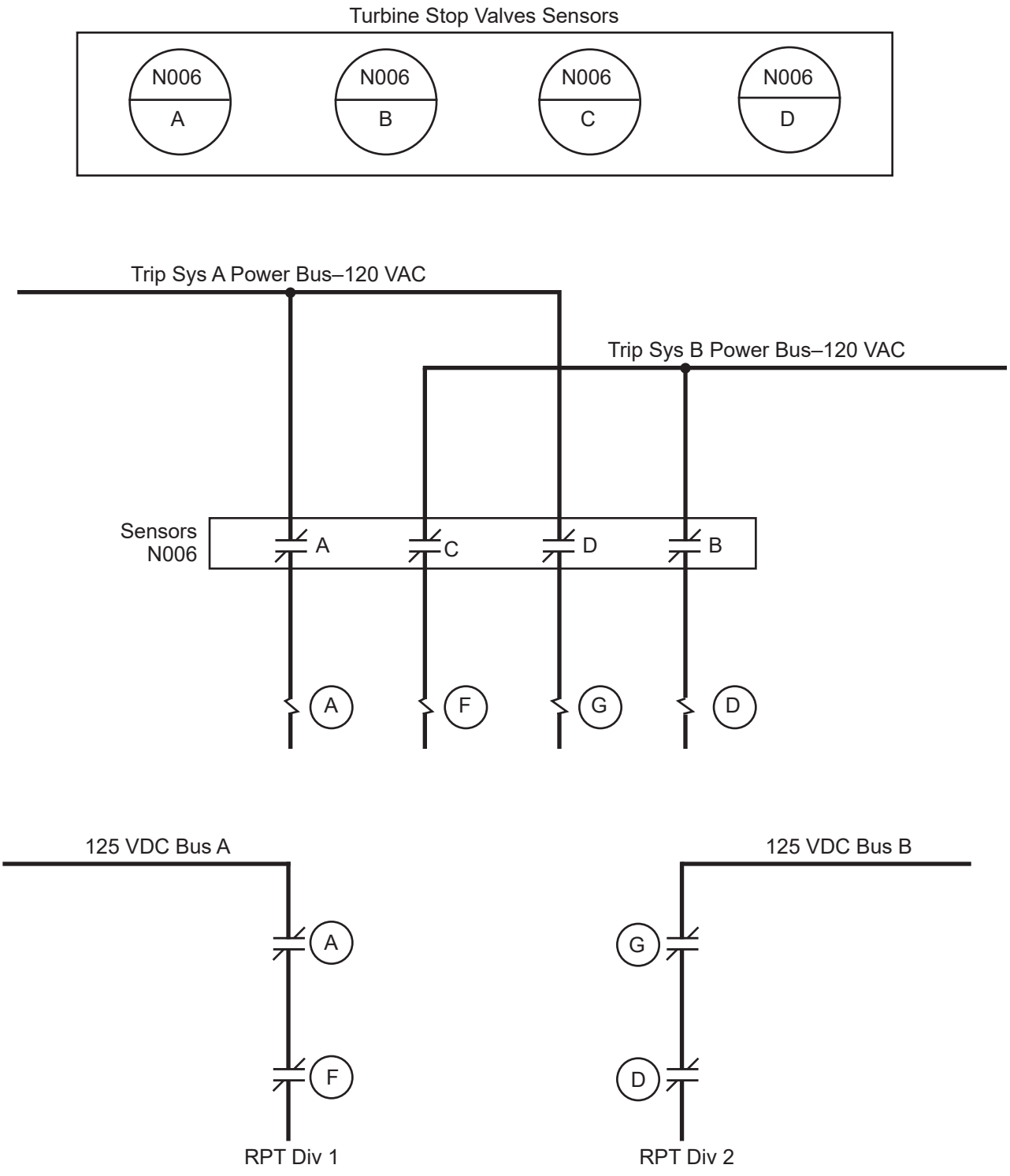

Typical for: Turbine Stop Valve Position
Switches N006A, B, C, D

Columbia Generating Station **Final Safety Analysis Report**	**Turbine Stop Valve Sensors**		
	Draw. No. **920843.50**	Rev.	Figure **7.6-15**

NOTE:
1. REFER TO INSTRUMENT MASTER DATA SHEETS FOR SETPOINT INFORMATION.

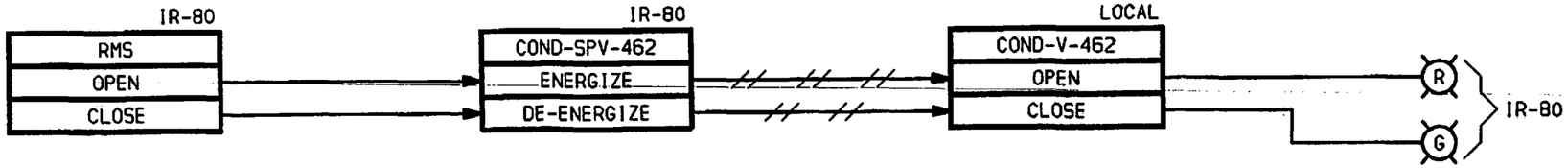

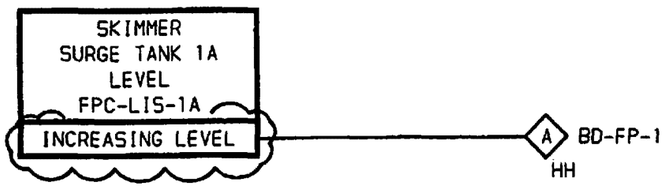

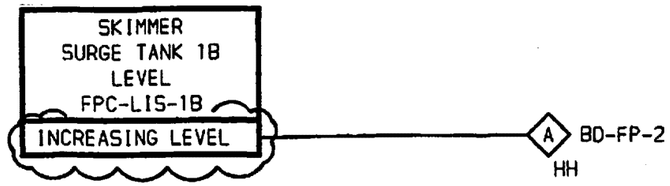

Columbia Generating Station Final Safety Analysis Report	Control Logic Diagram - Fuel Pool Cooling and Cleanup		
	Draw. No. M620-526-5	Rev. 7	Figure 7.6-16

NOTE:

1. TIME DELAY RELAY INFORMATION IS CONTROLLED ON E514-30 AND E514-31.
2. REFER TO INSTRUMENT MASTER DATA SHEETS FOR SETPOINT INFORMATION.

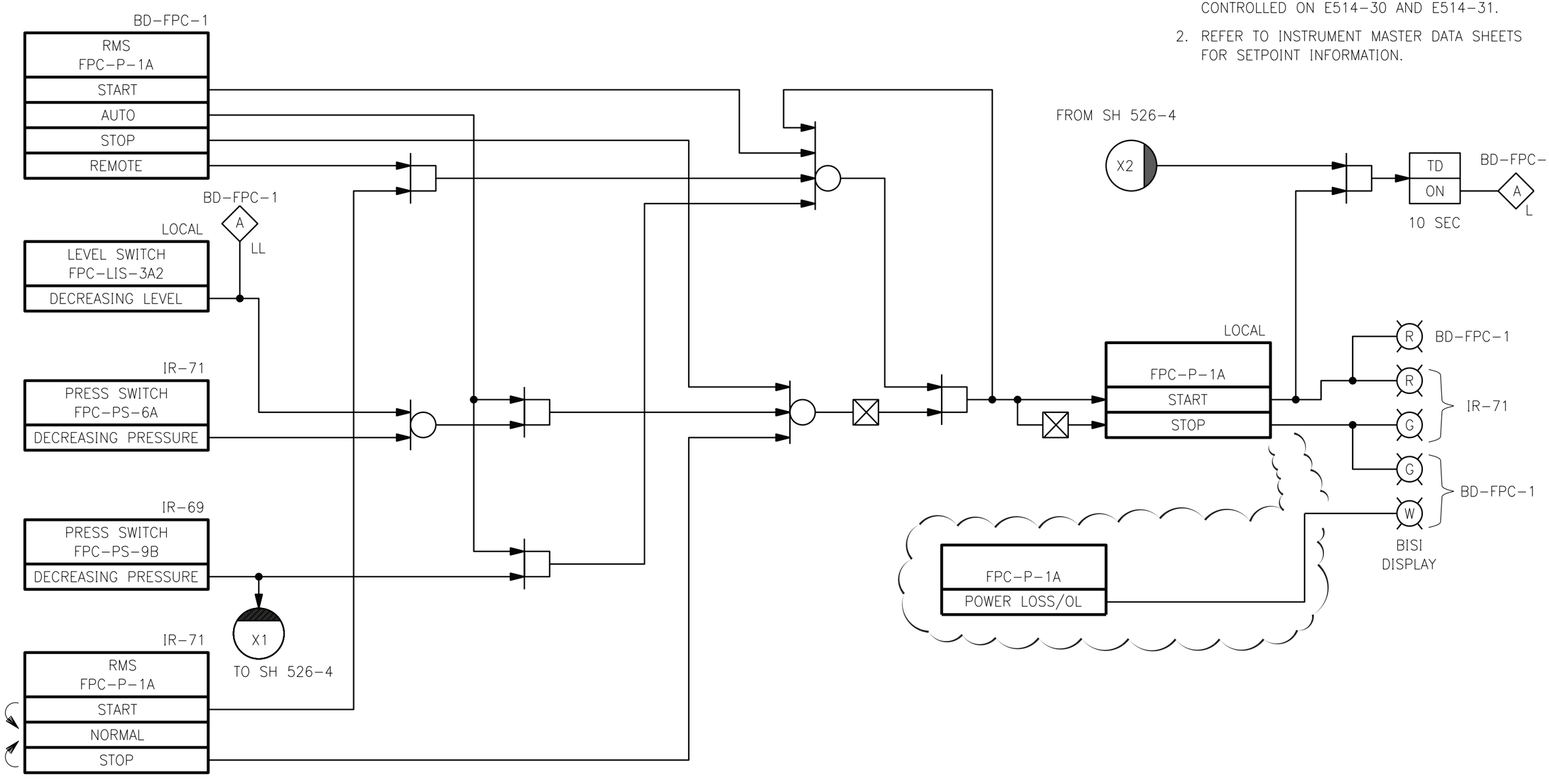

Columbia Generating Station Final Safety Analysis Report	**Control Logic Diagram - Fuel Pool Circulation Pump (FPC-P-1A)**		
	Draw. No. M620-526-3	Rev. 13	Figure 07.6-17

NOTE:

1. TIME DELAY RELAY INFORMATION IS CONTROLLED ON E514-30 AND E514-31.
2. REFER TO INSTRUMENT MASTER DATA SHEETS FOR SETPOINT INFORMATION.

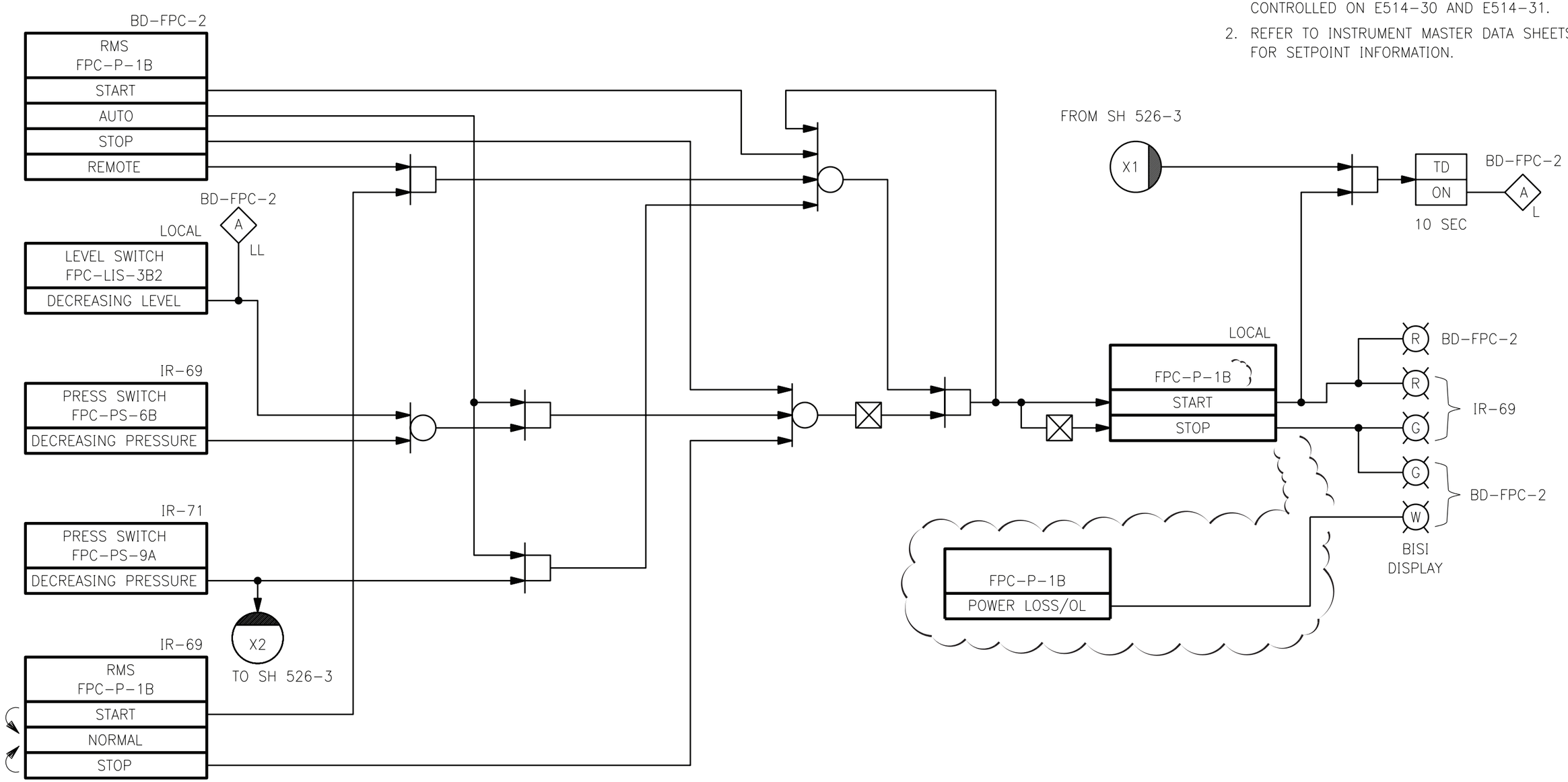

Columbia Generating Station **Final Safety Analysis Report**	**Control Logic Diagram - Fuel Pool Circulation Pump (FPC-P-1B)**	
	Draw. No. M620-526-4	**Rev.** 13	**Figure** 07.6-18

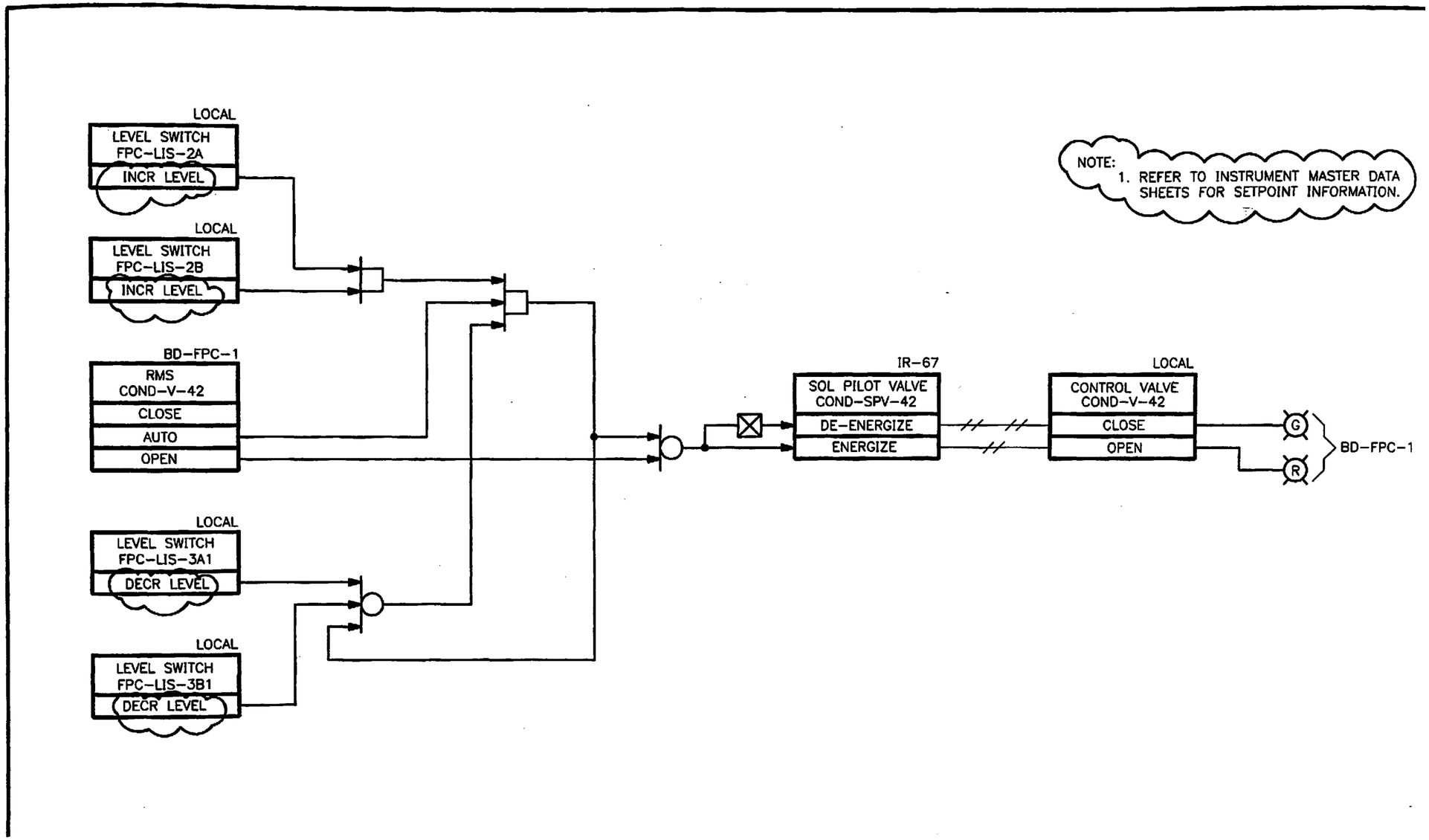

Columbia Generating Station Final Safety Analysis Report	Control Logic Diagram - Makeup Water Skimmer Surge Tank (Fuel Pool)		
	Draw. No. M620-526-2	Rev. 8	Figure 7.6-19

NOTE:

1. TIME DELAY RELAY INFORMATION IS CONTROLLED ON E514-30 AND E514-31.
2. REFER TO INSTRUMENT MASTER DATA SHEETS FOR SETPOINT INFORMATION.

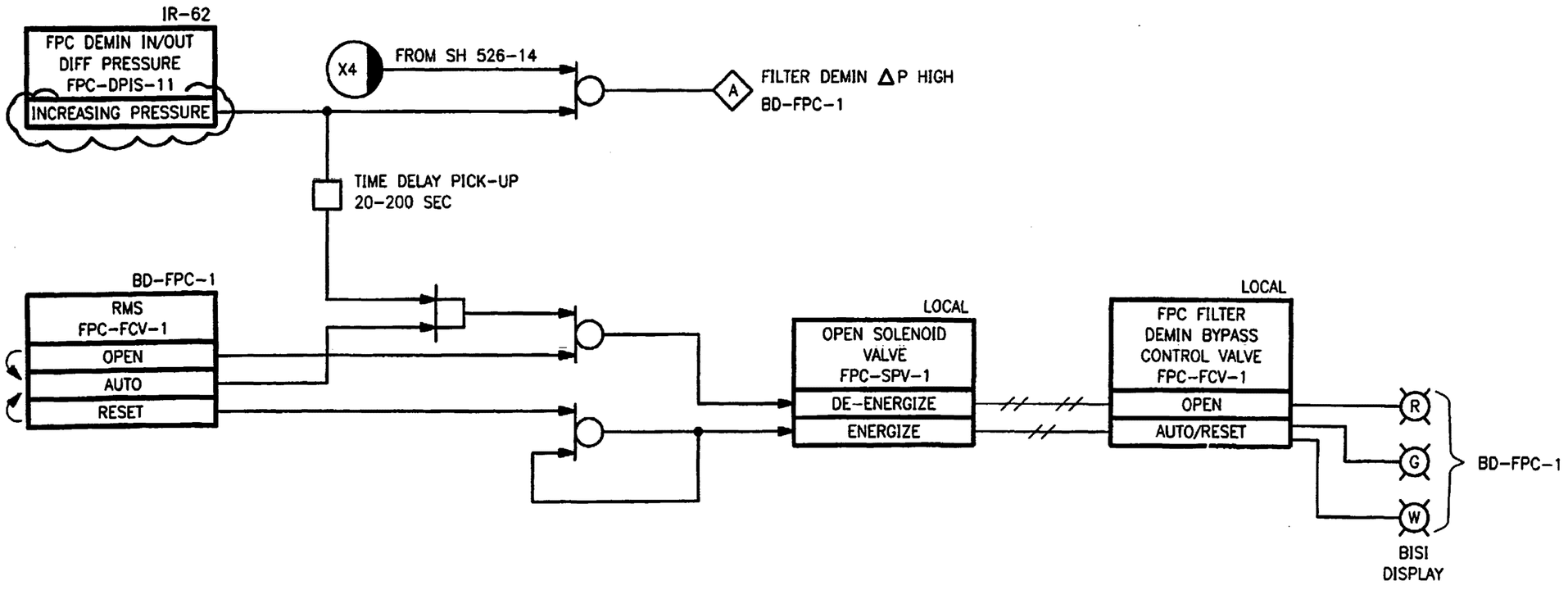

Columbia Generating Station Final Safety Analysis Report	Control Logic Diagram - Fuel Pool Filter Demineralizer Bypass (Division 1)		
	Draw. No. M620-526-13	Rev. 7	Figure 7.6-20

RMS & VALVE NO.	RMS & IND LIGHT LOC	DIV
FPC-V-181A	BD-FPC-1	I
FPC-V-181B	BD-FPC-2	II

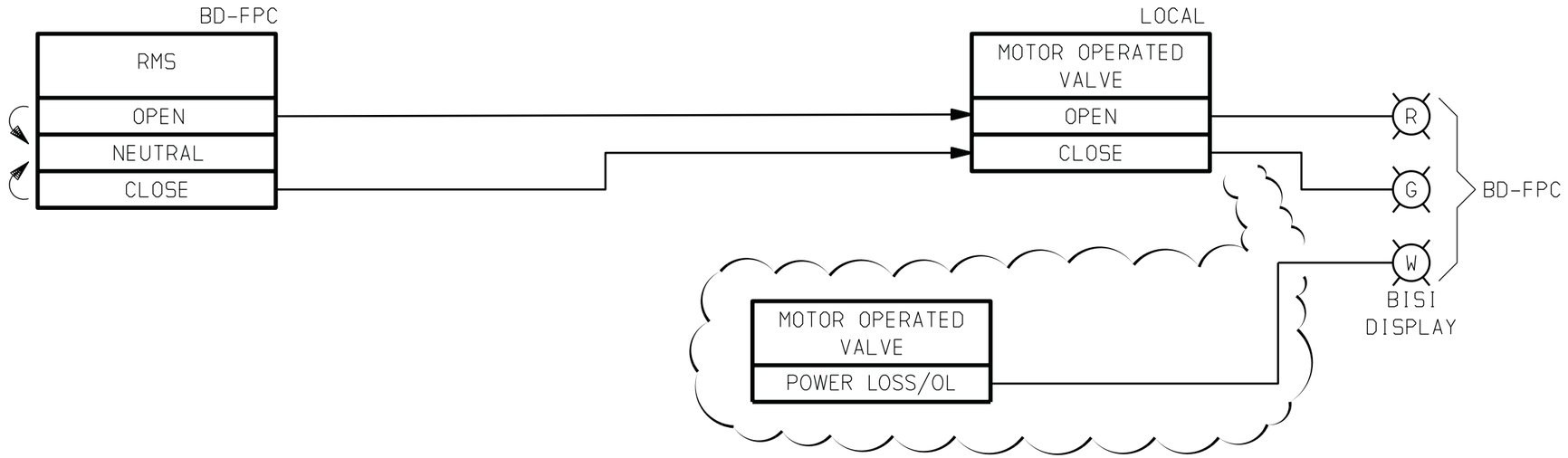

Columbia Generating Station
Final Safety Analysis Report

Control Logic Diagram - Fuel Pool Cooling Motor Operated Valve

Draw. No. M620-526-12 | Rev. 5 | Figure 7.6-21

NOTE:

1. REFER TO INSTRUMENT MASTER DATA SHEETS FOR SETPOINT INFORMATION.

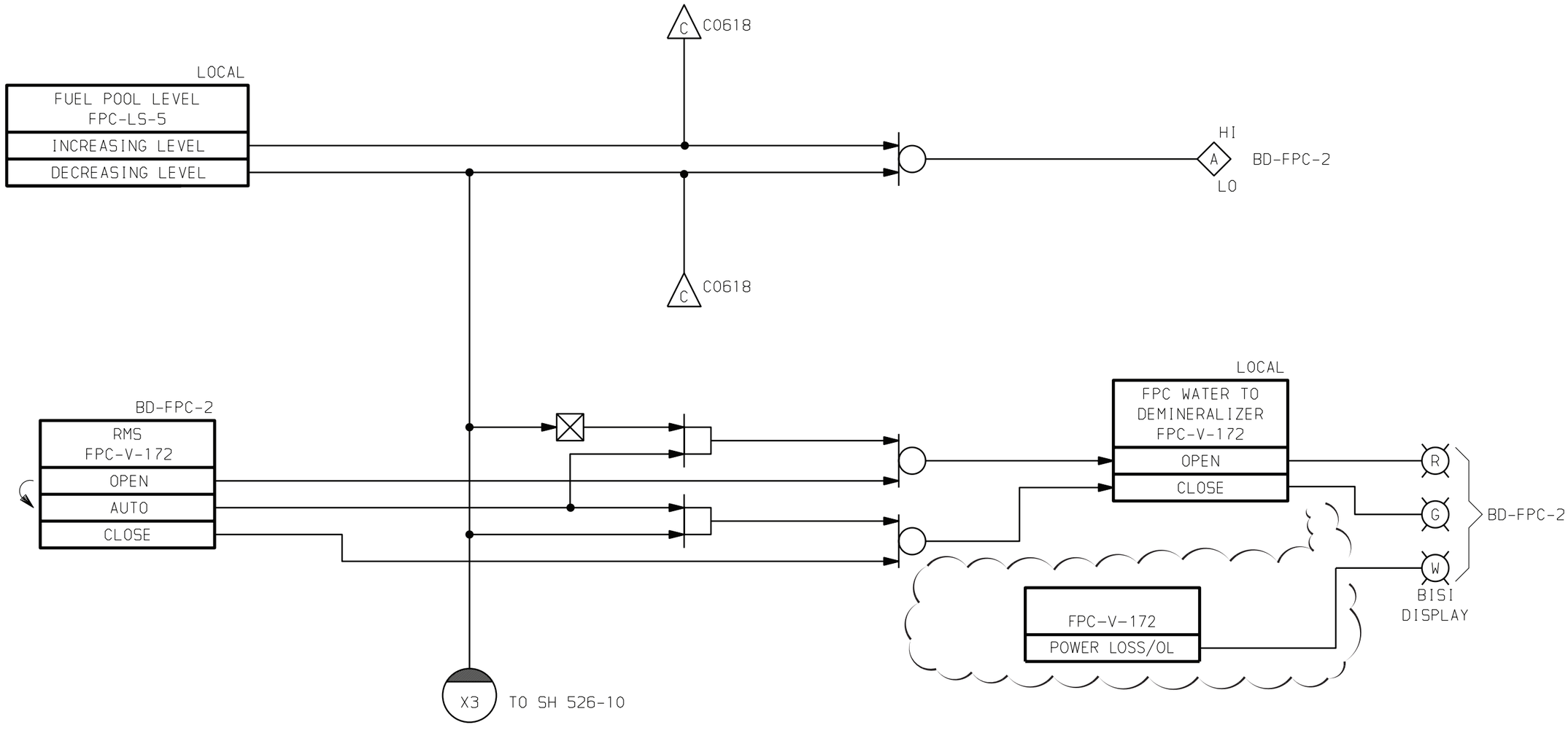

Columbia Generating Station **Final Safety Analysis Report**	**Control Logic Diagram - Fuel Pool Cooling Loop Isolation (Division 1)**		
	Draw. No. M620-526-11	**Rev.** 6	**Figure** 07.6-22

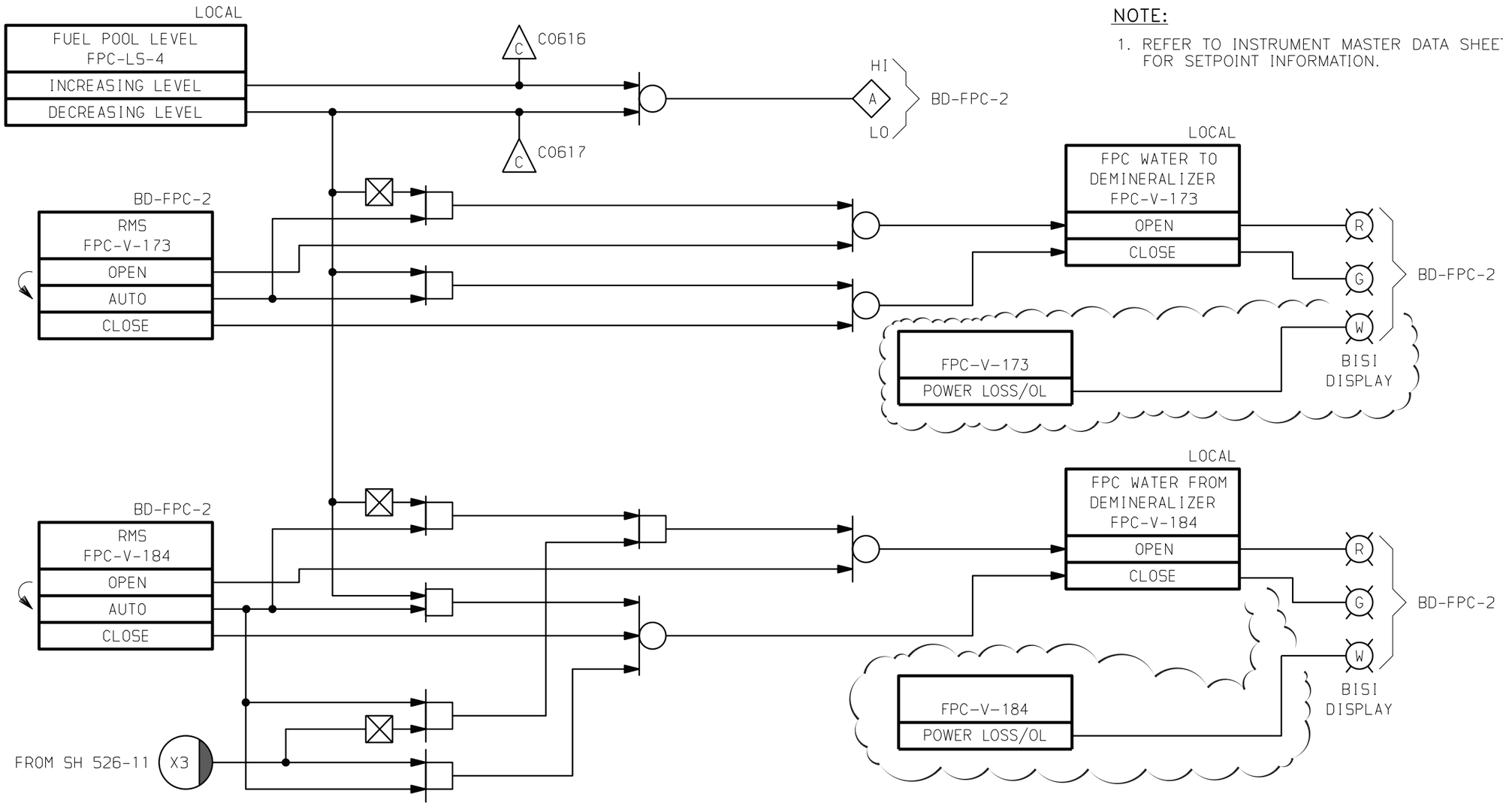

Columbia Generating Station **Final Safety Analysis Report**	**Control Logic Diagram - Fuel Pool Cooling Loop Isolation (Division 2)**	
	Draw. No. M620-526-10	**Rev.** 6	**Figure** 07.6-23

NOTE:

1. TIME DELAY RELAY INFORMATION IS CONTROLLED ON E514-30 AND E514-31.
2. REFER TO INSTRUMENT MASTER DATA SHEETS FOR SETPOINT INFORMATION.

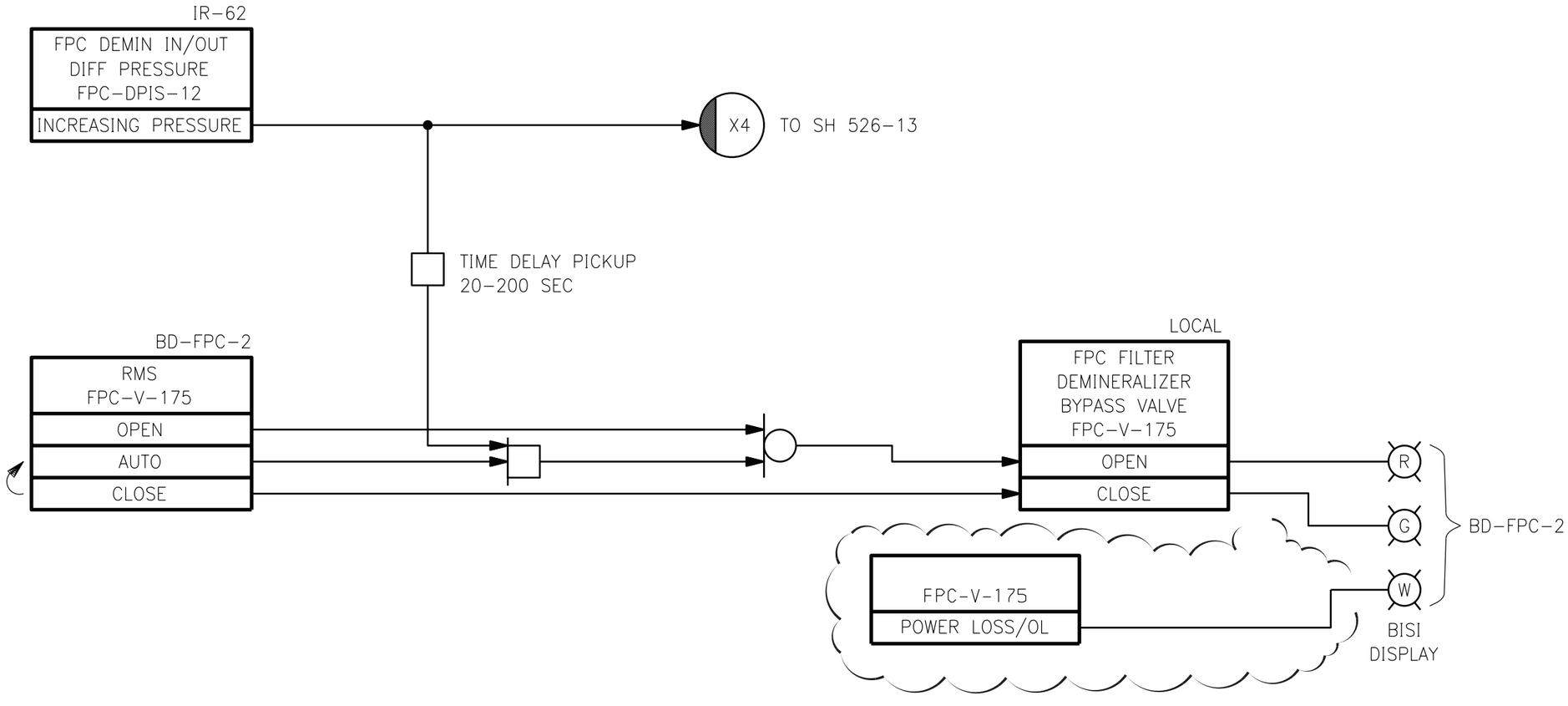

Columbia Generating Station **Final Safety Analysis Report**	**Control Logic Diagram - Fuel Pool Filter Demineralizer Bypass (Division 2)**		
	Draw. No. M620-526-14	**Rev.** 8	**Figure** 07.6-24

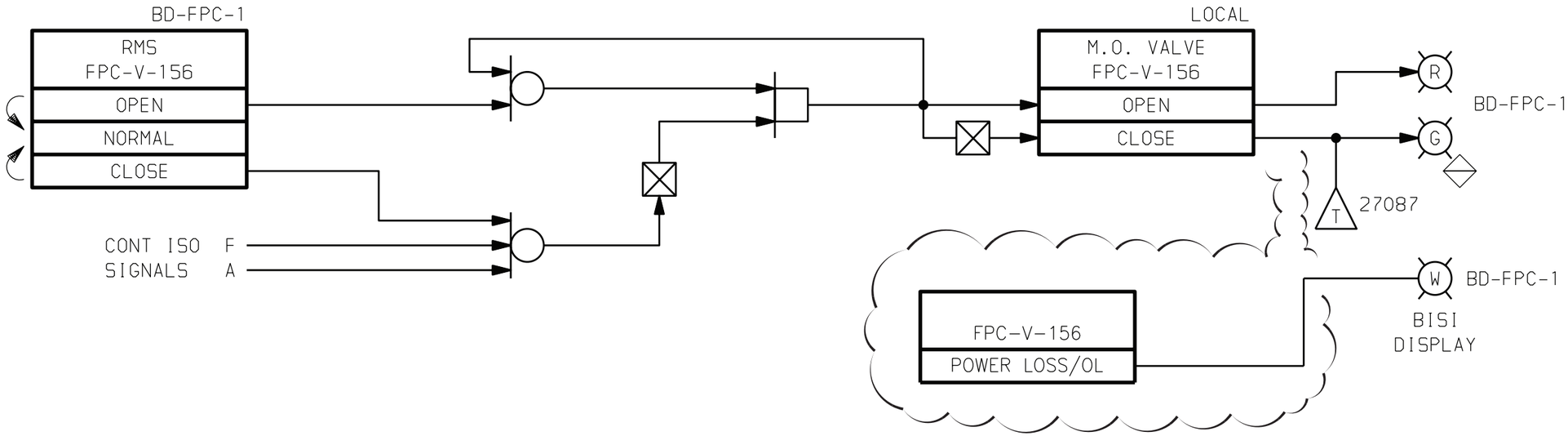

Columbia Generating Station **Final Safety Analysis Report**	**Control Logic Diagram - Fuel Pool Cooling and Cleanup**		
	Draw. No. M620-526-6	Rev. 9	Figure 07.6-25

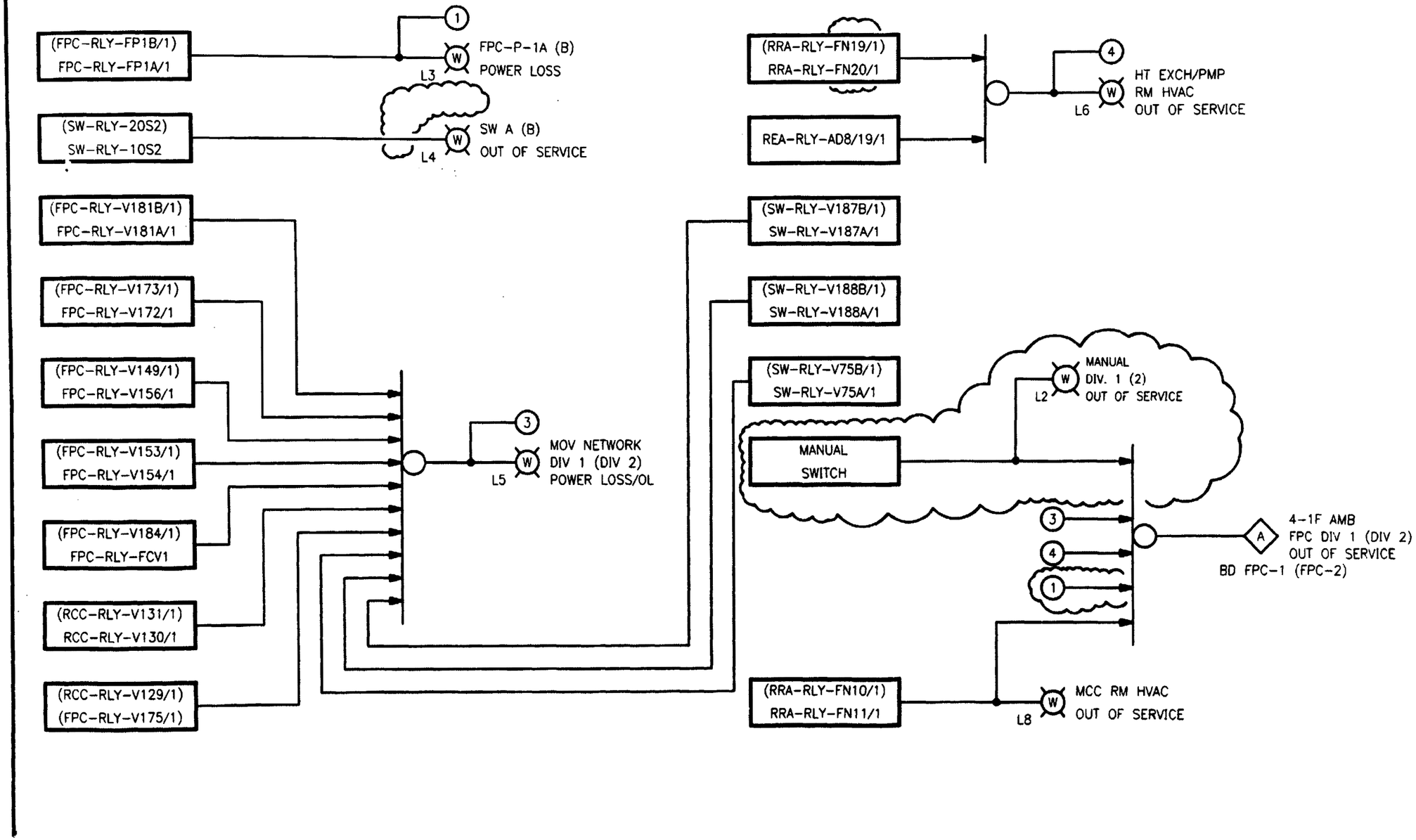

Columbia Generating Station Final Safety Analysis Report	BISI Logic Diagram – Fuel Pool Cooling and Cleanup System		
	Draw. No. M620-526-15	Rev. 3	Figure 7.6-26

7.7 CONTROL SYSTEMS NOT REQUIRED FOR SAFETY

7.7.1 DESCRIPTION

This section describes instrumentation and controls of major plant control systems whose functions are not essential for the safety of the plant. This section also describes instrumentation and controls not essential for the safety of the plant, which are not discussed in any other FSAR section. The systems include

a. Reactor vessel instrumentation,

b. Reactor manual control system (RMCS),

c. Recirculation flow control system,

d. Feedwater control system,

e. Digital Electro-Hydraulic (DEH) control system,

f. Neutron monitoring system (NMS) - traversing in-core probe (TIP), source range monitor (SRM), rod block monitor (RBM),

g. Process computer system and rod worth minimizer function (RWM),

h. Loose parts detection system (LPDS), Retired

i. Refueling interlocks,

j. Safety/relief valve (SRV) relief function, and

k. Transient data acquisition system (TDAS).

See Tables 7.7-1 and 7.7-2 for system design and supply responsibility and similarity to licensed reactors, respectively.

7.7.1.1 Reactor Vessel

Figure 10.3-2 shows the arrangements of the sensors and sensing equipment used to monitor reactor vessel conditions.

7.7.1.1.1 Function

The purpose of the reactor vessel instrumentation is to monitor key reactor vessel variables to provide the operator with information during normal plant operation, startup, and shutdown.

7.7.1.1.2 Operation

The following is a discussion of each reactor vessel variable monitored:

7.7.1.1.2.1 Reactor Vessel Temperature. The reactor vessel temperature is determined on the basis of reactor coolant temperature. Temperatures needed for operation and for compliance with the Technical Specifications operating limits are obtained from one of several sources, depending on the operating condition. During normal operation, either reactor pressure and/or the inlet temperature of the coolant in the recirculation loops can be used to determine the vessel temperature. The recirculation suction temperature (via thermocouples) is the primary temperature measurement when less than 100 psig. When greater than 100 psig, vessel pressure converted to saturation temperature is the primary measurement. During normal operation, vessel thermal transients are limited via operational constraints on parameters other than temperature.

7.7.1.1.2.2 Reactor Vessel Water Level. Figure 7.7-1 shows the water level range and the reactor vessel tap location for each water level range. The instruments that sense the water level are differential pressure devices with a condensate reference leg calibrated to be accurate at a specific vessel pressure and liquid temperature condition. During operation, a continuous flow of gas-free water at a flow rate of about 0.12 to 0.48 gal/hr is also maintained through each reference leg to the reference leg condensing chamber to minimize the transport of dissolved noncondensable gases down the reference leg. The following is a description of each water level range shown in Figure 7.7-1:

a. Shutdown water level range: This range is used to monitor the reactor water level during reactor shutdown conditions when the reactor system is flooded for maintenance and head removal. The vessel pressure and temperature conditions that are used for the calibration are 0 psig and 120°F water in the vessel. The two vessel instrument tap elevations used for this water level measurement are located at the top of the reactor vessel head and the instrument tap just below the bottom of the dryer skirt.

b. Upset water level range: This range is used to monitor the reactor water level above the narrow range scale (see item c below). The design and vessel taps are the same as outlined above. The vessel pressure and temperature condition for accurate indication is at the normal power operating point. The upset water level is continuously indicated by a recorder in the control room. The upset range upper limit is higher than the narrow range upper limit. Therefore, when

the indication is upscale on the narrow range recorder, water level indication may be read immediately from the upset range recorder. See Section 7.7.1.4.

c. Narrow water level range: This range uses reactor vessel taps at the elevation near the top of the dryer skirt and the taps at an elevation near the bottom of the dryer skirt. The zero of the instrument is the bottom of the dryer skirt and the instruments are calibrated to be accurate at the normal power operating point. The feedwater control system uses this range for its water level control and indication inputs. See Section 7.7.1.4.

d. Wide water level range: This range uses reactor vessel taps at the elevation near the top of the dryer skirt and the taps at an elevation near the top of the active fuel. The zero of the instrument is the bottom of the dryer skirt (527.5 in. above the vessel bottom inside) and the instruments are calibrated to be accurate at the normal power operating point. See Section 7.5 for the safety-related features of this range.

e. Fuel zone water level range: This range uses reactor vessel taps at the elevation near the top of the dryer skirt and the taps at the jet pump diffuser skirt. The zero of the instrument is the bottom of the dryer skirt (527.5 in. above the vessel bottom inside) and the instruments are calibrated to be accurate at 0 psig and saturated conditions. See Section 7.5 for the safety-related features of this range.

To decouple the change in measured water level with changes in drywell temperature, the elevation drop from reactor vessel penetration to the drywell penetration remains uniform for the narrow-range and wide-range water level instrument lines.

7.7.1.1.2.3 Reactor Core Hydraulics. A differential pressure transmitter indicates core plate pressure drop by measuring the pressure difference between the core inlet plenum and the space just above the core support assembly. The instrument sensing line used to determine the pressure below the core support assembly attaches to the reactor vessel nozzle N-11. An instrument sensing line is provided for measuring pressure above the core support assembly. The differential pressure of the core plate is recorded in the main control room.

Another differential pressure device indicates the jet pump developed head by measuring the pressure difference between the pressure above the core and the pressure below the core plate. This is indicated locally and in the main control room.

7.7.1.1.2.4 Reactor Vessel Pressure. Pressure switches, indicators, and transmitters detect reactor vessel internal pressure from the same instrument lines used for measuring reactor vessel water level.

7.7.1.2 Reactor Manual Control System

7.7.1.2.1 Function

The RMCS provides the operator with the means to make changes in nuclear reactivity by the operator manipulating control rods so that reactor power level and power distribution can be controlled.

This system includes the interlocks that inhibit rod movement (rod block) under certain conditions. The RMCS does not include any of the circuitry or devices used to automatically or manually scram the reactor; these devices are discussed in Section 7.2. In addition, the mechanical devices of the control rod drives (CRD) and the CRD hydraulic system are not included in the RMCS. The latter mechanical components are described in Section 4.1.3.

7.7.1.2.2 Operation

The RMCS includes the following:

a. Rod drive control system,
b. Rod block trip system,
c. Rod position probes, and
d. Position indication electronics.

Figure 4.6-5 show the layout of the CRD hydraulic system. Figure 7.7-2 shows the functional arrangement of devices for the control of components in the CRD hydraulic system. The logic diagram for the RMCS is shown in Figure 7.7-3. Although the figure also shows the arrangement of scram devices, these devices are not part of the RMCS. Three modes of control rod operation are used: insert, withdraw, and settle. Four solenoid-operated valves are associated with each control rod to accomplish these actions.

7.7.1.2.2.1 Rod Drive Control System. When the operator selects a control rod for motion and operates the rod insert or withdraw control switch, independent messages are formulated in the A and B portions of the rod drive control system (RDCS). A comparison test is made of these two messages, and identical results confirmed; then a serial message in the form of electrical pulses is transmitted to all hydraulic control units (HCU). The message contains two portions: (1) the identity or "address" of the selected HCU and (2) operation data on the action to be executed. Only one HCU responds to this message and it proceeds to execute the rod movement commands.

On receipt of the transmitted signal the responding HCU transmits three portions of a message back to the control room for comparison with the original message:

a. Hard-wire identity "address,"

b. Operations currently being executed, and

c. Status indications of valve positions, accumulator conditions, and test switch positions.

In either rod motion direction, the A and B messages are formulated and compared each millisecond and, if they agree, the A message is transmitted to the HCU selected by the operator.

Continued rod motion depends on receipt of a train of sequential messages because the HCU insert, withdraw, and settle valve control circuits are ac coupled. The system must operate in a dynamic manner to effect rod motion.

Any disagreement between the A and B formulated messages or the responding echo message will prevent rod motion. Electrical noise disruptions will have only a momentary effect on system operation. Correct operation of the system will resume when the noise source ceases.

In Figure 7.7-4, the three modes of the solid-state RMCS are shown:

a. Operator control mode: This mode (0.0002-sec duration) services the control rod selected by the operator to transmit action commands and receive status indications, i.e., presence of rod blocks.

b. Scan mode: This mode (0.045-sec duration) continuously monitors the other control rods in the reactor, one at a time, to update their status display.

c. Self test mode: This mode (on the order of 20 to 100-sec duration) automatically exercises one HCU at a time to ensure correct execution of actions commanded. This provides for a continuous, periodic self-test of the entire RMCS.

In the event that any discrepancy is detected in one of these three modes of operation, a rod motion inhibit is applied. This situation is alarmed and annunciated on the reactor control console as an “activity disagree” condition. The CRD control system is also designed to produce a rod motion inhibit condition should any failure of the system occur.

The cause of the discrepancy or failure must be corrected before rod movement can proceed. Note, however, that this system cannot affect normal shutdown capability via the reactor protection system (RPS).

The rod selection circuitry is arranged so that a rod selection is sustained until either another rod is selected or separate action is taken to revert the selection circuitry to a no-rod selection

condition. Initiating movement of the selected rod prevents the selection of any other rod until the movement cycle of the selected rod has been completed. Reversion to the no-rod selected condition is not possible (except for loss of control circuit power) until any moving rod has completed the movement cycle.

The direction in which the selected rod moves is determined by the position of four switches located on the reactor control panel. These four switches, "insert," "withdraw," "continuous insert," and "continuous withdraw" are push buttons which return by spring action to an off position.

The following is a description of the operation of the RMCS during an insert cycle. The cycle is described in terms of the insert, withdraw, and settle commands from the RMCS.

> With a control rod selected for movement, depressing the "insert" switch and then releasing the switch energizes the insert command for a limited time. Just as the insert command is removed, the settle command is automatically energized and remains energized for a limited time. The insert command time setting and the rate of drive water flow provided by the CRD hydraulic system determine the distance traveled by a rod. The time setting results in a one-notch (6-in.) insertion of the selected rod for each momentary application of a rod-in signal from the rod movement switch. Continuous insertion of a selected control rod is possible by holding the "insert" switch.

A second switch can be used to affect insertion of a selected control rod. This switch is the "continuous insert" switch. By holding this switch "in," the unit maintains the insert command in a continuous, energized state to cause continuous insertion of the selected control rod. When released, the "insert valves" close immediately and no settle function is available so rod motion stops via leakage past the seals.

The following is a description of the operation of the RMCS during a withdraw cycle. The cycle is described in terms of the insert, withdraw, and settle commands.

> With a control rod selected for movement, depressing the "withdrawal" switch energizes the insert valves at the beginning of the withdrawal cycle to allow the collet fingers to disengage the index tube. When the insert valves are deenergized, the withdraw and settle valves are energized for a controlled period of time. The withdraw valve is deenergized before motion is complete; the drive then settles until the collet fingers engage. The settle valve is then deenergized, completing the withdraw cycle. This withdraw cycle is the same whether the withdraw switch is held continuously or momentarily depressed position. The timers that control the withdraw cycle are set so that the rod travels one notch (6-in.) per cycle. Provisions are included to prevent further control rod motion in the event of timer failure.

A selected control rod can be continuously withdrawn if the "withdraw" switch is held in the depressed position at the same time that the "continuous withdraw" switch is held in the depressed position. With both switches held in these positions, the insert valves energize momentarily and then the withdraw valves are continuously energized. Upon releasing the switches the settle function will start.

7.7.1.2.2.2 Rod Block Trip System. This portion of the RMCS on receipt of input signals from other systems inhibits movement or selection of control rods.

a. Grouping of channels

The same grouping of neutron monitoring equipment [SRM, intermediate range monitor (IRM), average power range monitor (APRM), and RBM] that is used in the RPS is also used in the rod block circuitry.

Half of the total monitors [SRM, IRM, APRM, RBM, reactor recirculation control (RRC) flow units, flow comparator, and scram discharge volume high level] provide inputs to one of the RMCS rod block logic circuits and the remaining half provide inputs to the other RMCS rod block logic circuit.

The rod withdrawal block from the RWM trip affects only one RMCS rod block logic. The rod insert block from the RWM function prevents both notch insertion and continuous insertion.

The APRM and RBM (see Section 7.7.1.8) rod block settings are varied as a function of recirculation flow. Analyses show that the selected settings are sufficient to avoid both RPS action and local fuel damage as a result of a single control rod withdrawal error. Mechanical switches in the SRM and IRM detector drive systems provide the position signals used to indicate that a detector is not fully inserted. Additional discussion of the NMS is in Sections 7.7.1.6, 7.7.1.7, and 7.7.1.8. The rod block from scram discharge volume high water level uses two nonindicating transmitter/level switches installed on the scram discharge volume. These two transmitter/level switches provide a control room annunciation of increasing level below the level at which a rod block occurs.

b. Rod block functions

The following discussion describes the various rod block functions and explains the intent of each function. The instruments used to sense the conditions for which a rod block is provided are discussed in the following sections. The rod

block functions provided specifically for refueling situations are described in Section 7.7.1.13.

Figures 7.7-3 and 7.6-3 show the rod block interlocks used in the RMCS. Figure 7.7-3 shows the general functional arrangement of the interlocks, and Figure 7.6-3 shows the rod blocking functions that originate in the NMS.

1. With the mode switch in the SHUTDOWN position, no control rod can be withdrawn. This enforces compliance with the intent of the shutdown mode.

2. The circuitry is arranged to initiate a rod block regardless of the position of the mode switch for the following conditions:

   (a) Any APRM upscale rod block alarm. The purpose of this rod block function is to avoid conditions that would require RPS action if allowed to proceed. The APRM upscale rod block alarm setting is selected to initiate a rod block before the APRM high neutron flux scram setting is reached.

   (b) Any APRM inoperative alarm. This ensures that no control rod is withdrawn unless the average power range neutron monitoring channels are either in service or correctly bypassed.

   (c) Scram discharge volume high water level. This ensures that no control rod is withdrawn unless enough capacity is available in the scram discharge volume to accommodate a scram. The setting is selected to initiate a rod block earlier than the scram that is initiated on scram discharge volume high water level.

   (d) Scram discharge volume high water level scram trip bypassed. This ensures that no control rod is withdrawn while the scram discharge volume high water level scram function is out of service.

   (e) The RWM can initiate a rod insert block and a rod withdrawal block. The purpose of these functions is to reinforce procedural controls that limit the reactivity worth of control rods under lower power conditions. The rod block trip settings are based on the allowable control rod worth limits established for the design basis rod drop accident. Adherence to prescribed control rod patterns is the normal method by which this reactivity restriction is observed.

Additional information on the RWM function is in Section 7.7.1.10.

(f) Rod position information system (RPIS) malfunction. This ensures that no control rod can be withdrawn unless the RPIS is in service.

(g) Either RBM upscale alarm. This function is provided to stop the erroneous withdrawal of a control rod so that local fuel damage does not result. Although local fuel damage poses no significant threat in terms of radioactive material released from the nuclear system, the trip setting is selected so that no local fuel damage results from a single control rod withdrawal error during power range operation.

(h) Either RBM inoperative alarm. This ensures that no control rod is withdrawn unless the RBM channels are in service or correctly bypassed.

3. With the reactor mode switch in the RUN position, any of the following conditions initiates a rod block.

(a) Any APRM downscale alarm. This ensures that no control rod will be withdrawn during power range operation unless the average power range neutron monitoring channels are operating correctly or are correctly bypassed. All unbypassed APRMs must be on scale during reactor operations in the RUN mode.

(b) Either RBM downscale alarm. This ensures that no control rod is withdrawn during power range operation unless the RBM channels are operating correctly or are correctly bypassed. Unbypassed RBMs must be on scale during reactor operations in the RUN mode.

(c) Any recirculation flow unit upscale, inoperative, or comparator alarm. This ensures that no control rod is withdrawn unless the flow channels are operable, the difference between flow units is within limits, and the flow rate is not unusually high.

4. With the mode switch in the STARTUP or REFUEL position, any of the following conditions initiates a rod block:

(a) Any SRM detector not fully inserted into the core when the SRM count level is below the retract permit level and any IRM range switch on either of the two lowest ranges. This ensures that no control rod is withdrawn unless all SRM detectors are correctly inserted when they must be relied on to provide the operator with neutron flux level information.

(b) Any SRM upscale level alarm. This ensures that no control rod is withdrawn unless the SRM detectors are correctly retracted during a reactor startup. The rod block setting is selected at the upper end of the range over which the SRM is designed to detect and measure neutron flux.

(c) Any SRM downscale alarm. This ensures that no control rod is withdrawn unless the SRM count rate is above the minimum prescribed for low neutron flux level monitoring.

(d) Any SRM inoperative alarm. This ensures that no control rod is withdrawn during low neutron flux level operations unless neutron monitoring capability is available.

(e) Any IRM detector not fully inserted into the core. This ensures that no control rod is withdrawn during low neutron flux level operations unless proper neutron monitoring capability is available.

(f) Any IRM upscale alarm. This ensures that no control rod is withdrawn unless the intermediate range neutron monitoring equipment is correctly upranged during a reactor startup. This rod block also provided a means to stop rod withdrawal in time to avoid conditions requiring RPS action (scram) in the event that a rod withdrawal error is made during low neutron flux level operations.

(g) Any IRM downscale alarm except when range switch is on the lowest range. This ensures that no control rod is withdrawn during low neutron flux level operations unless the neutron flux is being correctly monitored. This rod block prevents the continuation of a reactor startup if the operator upranges the IRM too far for the existing flux level. Thus, the rod block ensures that the IRM is on scale if control rods are to be withdrawn.

(h) Any IRM inoperative alarm. This ensures that no control rod is withdrawn during low neutron flux level operations unless neutron monitoring capability is available.

c. Rod block bypasses

To permit continued power operation during repair or calibration of equipment for selected functions that provide rod block interlocks, a limited number of manual bypasses are permitted as follows:

1. One SRM channel,
2. Two IRM channels (1 on either RPS bus A or bus B),
3. One APRM channel, and
4. One RBM channel.

The IRMs are arranged as two groups of equal numbers of channels. One manual bypass is allowed in each group. The groups are chosen so that adequate monitoring of the core is maintained with one channel bypassed in each group.

These bypasses are affected by positioning switches in the control room. A light in the control room indicates the bypassed condition.

An automatic bypass of the SRM detector position rod block is effected as the neutron flux increases beyond a preset low level on the SRM instrumentation. The bypass allows the detectors to be partially or completely withdrawn as a reactor startup is continued.

An automatic bypass of the RBM rod block occurs when the power level is below a preselected level (less than 30% power) or when a peripheral control rod is selected. Either condition indicates that local fuel damage is not threatened and that RBM action is not required.

The RWM rod block function is automatically bypassed when reactor power increases above a preselected value in the power range. The RWM can be manually bypassed for maintenance when not required by procedure.

7.7.1.2.2.3 Rod Position Probes. The position probe is a long cylindrical assembly that fits inside the CRD. It includes 53 magnetically operated reed switches, located along the length of the probe and operated by a permanent magnet fixed to the moving part of the hydraulic drive mechanism. As the drive, and with it the control rod blade, moves along its length, the magnet causes reed switches to close as it passes over the switch locations. The particular switch closed then indicates where the CRD, and hence the rod itself is positioned.

The switches are located as follows: one at each of 25 notch (even) positions, one at each of 24 mid-notch (odd) positions, one at the fully inserted position (approximately the same location as the "00" notch), one at the fully withdrawn position (approximately the same location as the "48" notch position), one at the overtravel full out (decoupled position), and one at the overtravel full in position.

All of the mid-notch or odd switches are wired in parallel and treated as one switch (for purposes of external connections), and the fully inserted and overtravel full-in switches are wired in parallel and treated as one switch. These and the remaining switches are wired in a 5 x 6 array (the switches short the intersections) and routed out in an 11-wire cable to the processing electronics (the probe also includes a thermocouple which is wired out separate from the 5 x 6 array). See Figure 7.7-5.

7.7.1.2.2.4 Position Indication Electronics. The electronics consist of a set of probe multiplexer cards (one per four-rod group where the four-rod group is the same as the display grouping described later in this section), a set of file control cards (one per 11 multiplexer cards), and one set of master control and processing cards serving the whole system. All probe multiplexer cards are the same except that each has a pair of plug-in daughter cards containing the identity code of one four-rod group (the probes for the corresponding four rods are connected to the probe multiplexer card). The system operates on a continuous scanning basis with a complete cycle every 45 msec.

The control logic generates the identity code of one rod in the set and transmits it using time multiplexing to all of the file control cards. These in turn transmit the identity with timing signals to all of the probe multiplexer cards. The one multiplexer card with the matching rod identity will respond and transmit its identity (locally generated) plus the raw probe data for that rod back through the file control card to the master control and processing logic. The processing logic does several checks on the returning data. First a check is made to verify that an answer was received. Next the identity of the answering data is checked against that which was sent. Finally the format of the data is checked for legitimacy. Only a single even position or, full-in plus position "00," or full-out plus position "48," or odd, or overtravel, or blank (no switch closed) are legitimate. Any other combination of switches is flagged as a fault.

If the data passes all of these tests, it is (a) decoded and transmitted in multiplexed form to the displays in the main control panel and (b) loaded into a memory to be read by the computer as required.

As soon as data for one rod is processed, the identity for the next rod is generated and processed and so on for all of the rods. When data for all rods has been gathered, the cycle repeats.

A rod information display on the reactor control panel is patterned after a top view of the reactor core. The display allows the operator to acquire information rapidly by scanning.

Colored windows provide an overall indication of rod pattern and allow the operator to quickly identify an abnormal indication. The following information for each control rod is presented in the display:

a. Rod fully inserted (green),
b. Rod fully withdrawn (red),
c. Selected rod identification (coordinate position, white),
d. Accumulator trouble (amber),
e. Rod scram (blue), and
f. Rod drift (red).

LPRM low flux levels and LPRM high flux levels are displayed on the Operator Display Assemblies (ODA) located below the display.

Another display shows the positions of the control rod selected for movement and the other rods in the rod group. For display purposes the control rods are considered in groups of four adjacent rods (a four-rod group) centered around a common core volume monitored by four LPRM strings. Rod groups at the periphery of the core may have less than four rods. The four-rod display shows the positions, in digital form, of the rods in the group to which the selected rod belongs. A lighted background on the digital display indicates which of the four rods is selected for movement.

The four-rod display allows the operator to focus attention on the portion of the core where rod motion is occurring. A full core rod position display would tend to be confusing and difficult to read. The ODA's permit the operator to monitor the core reactivity during rod motion. In addition, on demand by the operator, the process computer will provide a print out of all rod positions.

During startup or shutdown all rods of a given sequence are either fully withdrawn or fully inserted. These patterns are indicated on the full core display with the full-in or full-out lights.

In addition to the whole core display, a drifting rod is indicated by an alarm and red light in the control room. The rod drift condition is also monitored by the process computer.

An indication is also provided for rod trend beyond the limits of normal rod movement. If the rod drive piston moves to the overtravel position, an alarm is sounded in the control room. The overtravel alarm provides a means to verify that the drive-to-rod coupling is intact because

with the coupling in its normal condition the drive cannot be physically withdrawn to the overtravel position. Coupling integrity can be checked by attempting to withdraw the drive to the overtravel position.

For the displays above the selected rod identification, accumulator trouble and rod scram indicators are provided by the RDCS. The ODA LPRM high and low flux level readings are provided by the power range monitor system. The remaining information to the displays and the position information for the process computer (via the RWM) are provided by the rod position information subsystem.

The following main control room lights are provided to allow the operator to know the conditions of the CRD hydraulic system and the control circuitry:

a. Stabilizer valve selector switch position,
b. Insert command energized,
c. Withdraw command energized,
d. Settle command energized,
e. Withdrawal not permissive,
f. Continuous withdrawal,
g. Pressure control valve position,
h. Flow control valve position,
i. Drive water pump low suction pressure (alarm and pump trip),
j. Drive water filter high differential pressure (alarm only),
k. Charging water (to accumulator) high pressure (alarm only),
l. Scram discharge volume not drained (alarm only), and
m. Scram valve pilot air header high/low pressure (alarm only).

7.7.1.3 Recirculation Flow Control System

7.7.1.3.1 Function

The recirculation flow control function is to control reactor power level, over a limited range, by controlling the flow rate of the reactor recirculating water using recirculation pump speed. The recirculation flow control system is not required for safety purposes, nor required to operate during or after the design-basis accident. The system is required to operate in the normal plant environment for power-generation purposes only.

7.7.1.3.2 Operation

Reactor circulation flow is varied by controlling the recirculation pump speed. By adjusting recirculation pump speed the change in recirculation flow will automatically change the reactor power level. Each recirculation pump has its individual manual control system as well as the capability of being controlled in unison or ganged by the master setpoint station.

Figure 7.7-6 shows a simplified control scheme for the reactor recirculation flow control system and its relationship to other nuclear steam supply system (NSSS) control schemes.

The reactor power change resulting from change in recirculation flow causes the turbine digital electrohydraulic (DEH) control system to reposition the turbine control valves. The turbine responds to the change in reactor power level by adjusting the control valves, and hence its power output, until the load/speed error signal is reduced to zero.

Operator Information

Indication and alarms are provided to keep the operator informed of the status of the system and equipment and allow the operator to quickly determine the location of malfunctioning equipment.

Instrumentation provides loop flow, pump speed, and controller output and input deviation meters. Alarms are provided to alert the operator of malfunctioning control signals and increasing temperatures of cooling water. In most cases, alarms are supplemented by light indicators to more closely define the problem area.

Indicating lights are provided to indicate the status of the pump/motor control breakers. Alarms are provided to alert the operator of automatic trips and transfers of the pump/motor, malfunctions, and availability of automatic control circuitry.

The GE-FANUC reactor flow control system (RFCS) provides manual control of the RRC pump speed. The GE-FANUC is a programmable logic controller (PLC) located in panel H13-P634 in the main control room. It consists of digital control design which provides operator manual control for the RRC pump speed demand, permissive logic for starting the RRC pump motor, and runback limiter logic functions.

The operator sets the RRC pump speed from a manual ganged or individual loop control setpoint station located in panel H13-P602 in the main control room. The control station provides an adjustable speed drive (ASD) speed reference demand signal to adjust the supply frequency over the range 15 Hz to 63 Hz, which adjusts the speed of the RRC pump drive motors over the range 25% to 105% and in turn controls the recirculation flow rate. Figure 7.7-7 shows a simplified version of the control system major functions. The individual

loop manual setpoint/bias station also has the ability to trim (bias) each loop speed to allow for dissimilarities in performance of the pumps.

The GE-FANUC PLC consists of redundant central processing units (CPU) redundant data communication buses, and redundant genius input/output, (I/O) blocks.

A single video display terminal (VDT) is located on the control benchboard, H13-P602, to provide operating status. Major component group alarms are also provided via the backlit annunciator windows located on the vertical section of H13-P602.

The ASD speed demand reference signal is set by the operator. The GE-FANUC PLC conditions the speed demand signal for each loop for an acceptable ramp rate and for runback limiters, where required. The speed demand reference signal is routed from the control room to the ASD local communication panel via redundant data communication buses. At the ASD local communication panel, redundant genius I/O blocks transmit the speed demand reference signals (2-10-V dc) to the appropriate ASD loop/channel controls. The operator monitors the performance of the RRC using the indicators located on the vertical section of the benchboard H13-P602.

The ASD runs at the lowest speed demand of either the limiter signal or the speed demand setpoint signal. On initiation of a limiter or development of an alarm or fault in the RFCS or ASD channel, a main control room annunciator alarms and the individual loop setpoint bias stations at H13-P602 are transferred from the ganged control to the individual loop control.

Recirculation Pump Flow Measurement

The recirculation loop elbow tap differential pressure is used to provide indirect core flow indication for the flow-biased simulated thermal power scram and to indicate pump performance and jet pump drive flow. In general these functions do not require high measurement accuracy, although repeatability is required. The flow-biased simulated thermal power scram requires a signal that is proportional to pump flow. The signal is used as an indicator of core flow. The proportionality constant (calibration coefficient - pressure drop versus flow) is unimportant as long as that constant does not change; that is, the element is repeatable.

Control Interlocks

Operating conditions have been identified that could result in cavitation of the recirculation pumps and/or jet pumps. Operating procedures require the plant operator to avoid these conditions. In the event that due to operator error these conditions are not avoided, automatic interlocks exist which will prevent operation at these conditions.

Cavitation Protection

The cavitation characteristics (thermal power level at which cavitation will occur for a given flow) of the jet pumps and recirculation pump are similar to a BWR/3 and BWR/4 except that jet pump cavitation occurs at higher thermal power levels. Protection is provided by measuring the available subcooling and reducing the pumps to 25% speed when there is inadequate subcooling. Temperature elements in the loop suction line and steam dome pressure transmitters measure the amount of subcooling available to the system.

For the pump suction temperature an RTD is used. For the discharge measurement, steam dome pressure is used. With GE-FANUC digital capability a programmed "look up" table converts pressure to temperature and hence a differential temperature interlock is provided for the measurement of subcooling. If the minimum differential temperature becomes less than a predetermined value, the control logic will provide a time delayed command and run its output down to 15 Hz; hence the dual channel ASD output will reduce to 15 Hz and each recirculation pump motor will run back to 25% speed.

Feedwater Pump Trip Runback

The recirculation pump(s) will runback to a specific speed setpoint in response to the combination of a feedwater turbine trip and a low reactor pressure vessel (RPV) water level (L4). If the recirculation pump(s) were operating at or below the specified speed setpoint, a change in speed will not incur. This runback feature prevents a scram from a low level condition caused by one feedwater pump trip from rated conditions based on testing results.

High Loop Flow Mismatch

Mismatch of the flow in one loop to the other loop of greater than 50% is known to create abnormal conditions in the jet pumps having the lower flow. Such operation is normally precluded by operating procedures. Following a trip of one of two operating pumps, the tripped pump coasts down to zero.

Loop Suction and Discharge Isolation Valve Position

The pump is tripped at less than 90% open position of either valve to prevent pump damage from no flow if isolation valve closure is initiated while the pumps are running.

Trip to 25% Speed

The pumps are tripped to 25% speed in specific cases to avoid scram recovery delays due to vessel bottom head fluid stratification.

Startup Interlocks

Interlocks ensure that the following conditions are established before the recirculation pump will start:

a. The ASD is ready for operation,

b. The suction and discharge block valves are greater than 90% open,

c. The electrical protection "lock out" relay is reset,

d. The pump motor breakers, end-of-cycle recirculation pump trip (EOC-RPT) breakers, and ASD source and load breakers are racked in place and closed,

e. The RPT function is reset, and

f. The operator manual control station is set to minimum pump speed demand.

The flow control system has been designed to limit the maximum demand signal to the ASD at a rate of less than 10% of rated pump speed/sec. This is to ensure that the RPS will not initiate scram. Interlocks are installed to ensure that this limit is not exceeded.

Recirculation Pump Speed Rate of Change

Single failures can result in a recirculation pump speed maximum rate of change in both recirculation pumps of 10% of rated pump speed/sec, which may result in RPS activation. This value is the average continuous rate used in the transient analysis for the two loop controller failure event. For a one loop controller failure event, a higher than maximum rate of 25%/sec was assumed in the analysis.

The worst single failure would be an ASD control circuit failure which provides a high voltage/frequency power source to the motor.

Scram Avoidance Provisions

a. One pump trip-pump inertia is greater than 21,500 lb_m-ft^2 to allow coastdown without an RPS trip,

b. Recirculation pump speed runback if there is a trip of one feedwater pump and vessel low level from rated conditions based on testing results.

Reliability

The reliability of the ASD system and its GE-FANUC controls have been evaluated in NEDC-32232-P, "WNP-2 Reactor Recirculation Adjustable Speed Drive (ASD) System Reliability Analysis," August 1993. This reliability evaluation concludes that no credible failure modes were found that could affect safety assumptions for the loss-of-coolant (LOCA), anticipated transient without scram (ATWS), transient, and stability analyses.

7.7.1.4 Feedwater Control System

7.7.1.4.1 Function

The feedwater control system controls the flow of feedwater into the reactor vessel to maintain the vessel water level within predetermined limits during all normal plant operating modes. The range of water level is based on the requirements of the steam separators. The feedwater control system uses vessel water level, steam flow, and feedwater flow as a three-element control.

Normally, the signal from the feedwater flow is approximately equal to the steam flow signal; thus, if a change in the steam flow occurs, the feedwater flow follows. The steam flow signal provides anticipation of the change in water level that will result from change in load. The level signal provides a correction for any mismatch between the steam and feedwater flow which causes the level of the water in the reactor vessel to rise or fall accordingly. Single-element control is also available based on water level only.

7.7.1.4.2 Operation

During normal plant operation, the feedwater control system automatically regulates feedwater flow into the reactor vessel. The system can also be manually operated (see Figure 7.7-8).

The feedwater flow control instrumentation measures the water level in the reactor vessel, the feedwater flow rate into the reactor vessel, and the steam flow rate from the reactor vessel.

The optimum reactor vessel water level is determined by the requirements of the steam separators. The separators limit water carry-over in the steam going to the turbines and limit steam carry-under in water returning to the core. The water level in the reactor vessel is maintained within ± 2 in. of the setpoint value during normal operation and within the high and low level trip setpoints during normal plant maneuvering transients. This control capability is achieved during plant load changes by balancing the mass flow rate of feedwater to the reactor vessel with the steam flow from the reactor vessel. The feedwater flow is regulated by controlling the speed of the turbine-driven feedwater pumps to deliver the required flow to the reactor vessel.

The following is a discussion of the variables sensed for system operation.

7.7.1.4.2.1 Reactor Vessel Water Level. Reactor vessel narrow range water level is measured by three identical, independent sensing systems. For each channel, a differential pressure transmitter senses the difference between the pressure caused by a constant reference column of water and the pressure caused by the variable height of water in the reactor vessel. The differential pressure transmitter is installed on lines that serve other systems (see Section 7.7.1.1). Two of the differential pressure signals are used for indication and control and the third for indication only. The narrow-range level signal from one of the two control channels can be selected by the operator as the signal to be used for feedwater flow control. A third-narrow range level sensing channel is used in conjunction with the two control channels to provide high water level trips of the main turbine and feed pump turbines. All three narrow-range reactor level signals and reactor pressure are indicated in the main control room. A fourth level sensing system (upset range) provides level information beyond the span of the narrow range devices. The selected narrow-range water level and upset range water level signals are continually recorded in the main control room.

7.7.1.4.2.2 Main Steam Line Steam Flow. Steam flow is sensed at each main steam line flow restrictor by a differential pressure transmitter. A signal proportional to the true mass steam flow rate is linearized and indicated in the main control room. The signals are summed to produce a total steam flow signal for indication and feedwater flow control. The total steam flow signal is recorded in the main control room.

Alarms on steam flow are provided for use in the RWM logic. Interlocks from steam flow and feedwater flow are used to initiate insertion of the RWM block. An alarm on low steam flow indicates that the above RWM insertion interlock setpoint is being approached. Alarms are also provided for (1) high and low water level and (2) reactor high pressure. Interlocks will trip the plant turbine and feedwater pumps in event of reactor high water level.

7.7.1.4.2.3 Feedwater Flow. Feedwater is delivered to the reactor vessel through turbine-driven feedwater pumps, which are arranged in parallel. The feedwater control system sends a flow demand signal to the master level setpoint station and to the turbine governor control system. The turbine governor control system converts the flow demand signal to a turbine speed signal. On either system failure, the turbine speed signal is maintained at the steady value by each turbine operator control station, until the operator takes manual control. Both systems share data via a communications bus, and any transfer of control signal is bumpless. On reactor SCRAM, level setpoint setdown is performed in the feedwater control system. This immediately demands a low flow value, thus rapidly reducing feedwater flow and the likelihood of carryover.

Feedwater flow is sensed at a flow element in each feedwater line by differential pressure transmitters. Each feedwater signal is linearized and then summed to provide a total mass flow signal which is sent to the feedwater control system and recorded in the control room.

Three modes of feedwater flow control and thus level control are provided.

a. Startup automatic level control,
b. Run mode automatic flow control, and
c. Manual control.

Four level controllers are provided for startup valve control and automatic feed pump control. The master level setpoint station and startup valve control station contain, as a minimum, level setpoint digital display, signal output display, manual output control, manual/automatic switching capability, and manual setpoint adjustment. The two feed pump operator control stations contain turbine speed and pump discharge pressure displays, pump speed bias and signal output displays, manual output control, and manual/automatic switching capability. Each of these manual/automatic stations are software configured for its specific function. In the startup level control mode, measured level is compared to level setpoint within the controller. The resulting signal is conditioned by the proportional plus integral controller circuits and transmitted to the startup level control valves.

During normal operation three element automatic control is provided. The total steam flow/feed flow signal, modified by the conditioned level error signal, provides a flow demand signal to the feedwater flow control loop. The demanded flow is converted to a speed demand which is compared to actual speed for each active pump. The resulting speed error signal changes the turbine speed, zeroing the error signal.

Manual control is available by selecting manual on the controller manual/automatic stations. Flow change is accomplished by depressing the raise button or lower button depending on the desired flow change.

The level control system also provides interlocks and control functions to other systems. If the recirculation pumps are running at a speed greater than the single feed turbine capability setpoint, loss of one of the reactor feed pumps and coincident or subsequent low water level, recirculation flow is reduced to within the power capabilities of the remaining reactor feed pump. This reduction aids in avoiding a low level scram by reducing the steaming rate from rated conditions based on testing results.

7.7.1.5 Digital Electro-Hydraulic Control System

7.7.1.5.1 Function

The function of turbine pressure regulation and control is performed by the DEH system. As a direct cycle boiling water reactor the turbine is slaved to the reactor in that all (except steam to the moisture separator reheaters) steam generated by the reactor is normally accepted by the turbine. The operation of the reactor requires pressure regulation to maintain a constant

(within the range of the DEH proportional controller setting) turbine inlet pressure with load following ability accomplished by variation of reactor power.

The DEH control system normally controls the turbine governor valves to maintain this constant turbine inlet pressure. In addition, the DEH control system also operates the steam bypass valves such that a portion of nuclear boiler flow can be bypassed when operating at steam generation levels that exceed the turbine load limits as well as during the startup and shutdown phase.

The overall turbine DEH control system accomplishes the following:

a. Control turbine speed and turbine acceleration,

b. Control the steam bypass system to keep reactor pressure within limits, and avoid large power transients, and

c. Control turbine inlet pressure within the DEH proportional controller range.

7.7.1.5.2 Operation

Pressure control is accomplished by controlling main steam pressure immediately upstream of the main turbine throttle and governor valves through modulation of the turbine-governor or steam bypass valves. Command signals to these valves are generated by the DEH control system which receives input from three redundant turbine inlet pressure sensors, as shown in Figure 7.7-9. For normal operation, the turbine governor valves regulate steam pressure. The plant ability to change turbine generator output is enabled by adjusting reactor power level, by varying reactor recirculation flow and by manually moving control rods. In response to the resulting steam production changes, the DEH control system adjusts the turbine governor valves to accept the steam output change, thereby regulating steam pressure and changing turbine generator power output.

7.7.1.5.2.1 Steam Pressure Control. During normal plant operation, steam pressure is controlled by the main turbine governor valves, positioned in response to the pressure demand signal (see Figure 7.7-9). The steam bypass valves are normally closed.

The DEH control system selects from three redundant pressure transmitters to control steam pressure. Separate pressure taps for each transmitter are provided at the turbine inlet. A median selector is used by the DEH control system to determine which throttle pressure transmitter is controlling. In addition, if one throttle pressure transmitter fails, the DEH control system will automatically select the higher value of the two remaining transmitters for control.

The total steam flow (pressure demand) signal is limited, after passage through the low value gate (as shown in Figure 7.7-9), to that required for full power operation of the turbine (plus a deadband) or the load setpoint. Thus, if the DEH control system senses additional steam flow is needed to control reactor pressure when the governor valves have reached the load setpoint (plus a deadband) or the governor valve (position) demand limit, the control signal error to the bypass valves will increase and cause bypass valve actuation.

Control for the turbine governor valves is designed so that the valves will close upon loss of control system electric power or loss of hydraulic system pressure.

7.7.1.5.2.2 Steam Bypass System. The steam bypass equipment is designed to control steam pressure when reactor steam generation exceeds turbine requirements such as during startup (pressure control, speed ramping, and synchronizing), sudden load reduction, and shutdown.

The bypass capacity of the system is approximately 25% of NSSS rated steam flow; sudden load reductions of up to the capacity of the steam bypass can be accommodated without reactor scram.

Normally, the bypass valves are held closed and the DEH control system controls the turbine governor valves, directing all steam flow to the turbine. If the speed/load demand limiter restricts steam flow to the turbine, the DEH controls system pressure by opening the bypass valves. If the capacity of the bypass valves is exceeded while the turbine cannot accept an increase in steam flow, the main steam pressure will rise and RPS action will cause shutdown of the reactor.

The bypass valves are an automatically operated, regulating type which are proportionally controlled by the turbine DEH control system.

The turbine DEH control system provides a signal to the bypass valves corresponding to the error between the turbine governor valve opening required by the pressure demand signal by the output of the low value gate circuit and the turbine governor valve position flow limit (see Figure 7.7-9). A bias signal is provided to maintain the bypass valves closed for momentary differences during normal operational transients.

7.7.1.5.2.3 Turbine Control System Variables. The turbine DEH control system is designed to receive input parameters of turbine throttle inlet pressure, governor and bypass valve position, and turbine speed to process the following signals in turbine modes 3 and 4:

a. The pressure setpoint signal varies the turbine inlet pressure operating point,

b. The pressure demand signal varies governor valve position corresponding to a steam flow from 0% to 100%,

c. The combined turbine and bypass valve steam flow limiter signal range adjusts valve position limits to limit steam flow from 90% to 150%; however it is set equal to or less than 130% of 15.013 Mlb/hr steam flow, which is the fuel analysis limit, and

d. The governor valve position (load) demand signal varies to close or open the valves. The governor valve position limiter limits the governor valve position demand signal so that it does not exceed the value corresponding to valves fully open. The load demand and pressure demand signals are compared and the bypass valves are opened when high steam pressure causes the pressure demand signal to be higher than the load demand signal.

7.7.1.5.2.4 Turbine Speed/Load Control Interfaces.

a. Normal control functions

The DEH control system performs three major functions: a monitoring function (Tricon 1 module), a control function (Tricon 3 module), and a trip function (Tricon 2 module). The control function can also initiate a turbine overspeed trip through the Tricon 2 module.

b. Normal modes of operation

The DEH control system (Tricon 3) has five turbine control modes. The modes are based on a system of steps that control the operation of the turbine. These modes are normally automatically entered depending on the current operating conditions. Each mode is tightly interlocked, so the next mode is only entered when the conditions are correct. This ensures an orderly progression through the steps and appropriate actions in the event of malfunctions. The five modes are Reactor Start, Speed Control, Load Control, Turbine Follow Reactor and Overspeed Test (numbered Mode 1 through Mode 5, respectively).

1. Turbine Mode 1: Reactor start

In Mode 1, the turbine throttle and bypass valves are controlled to allow the turbine to be latched and proceed to the speed control mode. Throttle pressure controller output demand selection only allows for control of the bypass valves to maintain throttle pressure. After a successful latch of the turbine, the sequence automatically enters Speed Control (Mode 2).

2. Turbine Mode 2: Speed control

In Mode 2, the turbine speed is ramped up to near synchronous speed by using the turbine throttle valves to control turbine speed and the bypass valves to control reactor pressure. The turbine valve control is transferred from the throttle valves to the governor valves when near synchronous speed. When speed measurement reaches approximately 20 rpm below target, the throttle valve minimum limit is ramped to 100%, opening the valves fully. As the throttle valves open, the governor valve speed controller is enabled to control speed.

Overspeed Protection Controller (OPC) logic is active in this mode. If nominal turbine speed is ≥103% speed, the OPC solenoids are energized which will close the governor and intercept valves. When turbine speed is reduced to less than 101%, the OPC solenoids close and return the DEH control system to Speed Control Mode.

The sequence will proceed to Load Control (Mode 3) if the generator breaker is detected closed or Overspeed Test (Mode 5) if Overspeed Test is selected.

3. Turbine Mode 3: Load (limit) control

Mode 3 is entered from Speed Control (Mode 2) when control is transferred to the governor valves and the generator output breaker is closed upon synchronizing with the grid. Mode 3 is also entered from Turbine Follow Reactor (Mode 4), when the throttle pressure controller output demand is equal to the governor valve load demand signal and when throttle pressure controller output demand is equal to the scaled valve position limit signal. See Figure 7.7-9.

When entering this mode, a load reference is set along with a ramp rate providing an initial electrical load on the generator by ramping the governor valves open increasing measured electrical load. During this initial operating condition, any increase or decrease in throttle pressure results in the bypass valves operating to maintain pressure.

During Mode 3, OPC remains enabled.

4. Turbine Mode 4: Turbine follow reactor

Mode 4 is entered from Load Control (Mode 3) when the throttle pressure controller output demand is lower than the governor valve load

demand signal. This is an indication that the throttle pressure controller is controlling pressure by modulating the governor valves. During Mode 4, as in the Load Control Mode, a load reference is set and the throttle pressure controller sets the governor and bypass valve flow demands, provided the demand is not restrained by the flow, load, or valve position limiters.

Sequential and Optimized valve management may also be selected in this Mode. In Sequential valve operation, governor valves two and three are modulated together following the same demand vs. position schedule; similarly, valves one and four are modulated together following a different schedule. Sequential valve selection is the only available selection during turbine startup and when operating below 95% electrical measured load. Optimized valve selection can only be entered if operating ≥95% electrical load. In Optimized valve operation, governor valves two and three follow the same schedule as if operating in Sequential valve. Valves one and four each have their own schedule.

This mode allows testing the throttle valves, governor valves, reheat/intercept valve pairs, and bypass valves to meet technical specification surveillance requirements. Only one valve may be tested at a time in this mode.

5. Turbine Mode 5: Overspeed/OPC test

The sequence enters Mode 5 from Mode 2, Speed Control, when the Overspeed Test Mode is selected. This Mode allows for the overspeed logic in the Control Tricon, the Trip Tricon, and each of the OPC solenoids to be tested without overspeeding the turbine. This is accomplished by ramping down the trip point to the operating speed range to initiate a trip. When the Overspeed Test select is returned to normal, the trip point automatically returns to its original setting.

c. Turbine shutdown or turbine generator trip

During turbine shutdown or turbine generator trip conditions, the main turbine throttle valves and governor valves are or will be closed. Reactor steam flow will then be passed through the steam bypass valves under steam pressure control, and through the reactor SRVs, as needed. See Section 10.2.2 for a complete description of the turbine generator protective and overspeed trips.

d. Steam bypass operation

The main turbine bypass system is designed to control steam pressure when reactor steam generation exceeds turbine requirements during plant startup, sudden load reduction, and cooldown. It allows excess steam flow from the reactor to the condenser without going through the turbine.

The technical specifications require the main turbine bypass system to be operable at greater than or equal to 25% reactor thermal power (RTP). To ensure this limit is met, the bypass valve logic is set to be armed based on generator load when the reactor is approximately 20% RTP during plant startup. This accounts for any thermal losses from the reactor and the turbine generator.

Fast opening of the steam bypass valves during a turbine trip, a generator load rejection, or an OPC actuation requires coordinated action with the turbine control system. When the turbine governor valves are under pressure control, no bypass steam flow is demanded. During turbine or generator trip events, fast-closure of the turbine throttle or governor valves occurs. The bypass valves fully open until load drops below 20% load, plus a 3-5 sec delay and then modulate under pressure control. The turbine governor valve demand is immediately tripped to zero as an anticipatory response, causing the bypass steam flow demand to equal the pressure regulation demand.

During an OPC actuation, fast closure of the governor and intercept valves occurs. If operating at or above approximately 20% RTP, the bypass valves will fast open.

e. Loss of turbine control system power

Turbine controls and valves are designed so that the turbine throttle and governor valves will close on loss of control system power or hydraulic pressure.

f. Operator information

The control interface and indications for the DEH control system are via soft control on two touch screen monitors mounted on the turbine generator section of the main control board. All controls and indications for the DEH control system during the various turbine generator operational modes (such as reactor start, speed control, load control, turbine follow reactor, or overspeed/OPC test) are available to the operator from the two Human Machine Interface (HMI) touch screens.

The DEH control system is self-diagnostic, therefore in the event of a component or control malfunction, an alarm will activate to indicate the failure to the operator. Also, the DEH control system is fault tolerant and redundant, so any single failed active component can be replaced on-line without impact to power operations.

The DEH control system (load demand) receives input from three independent pressure transmitters in the main steam line upstream of the main turbine throttle valves. The pressure setpoint can be set by the operator from the HMI stations.

The DEH control system has the following controls and information displayed in the main control room from the HMI stations:

1. Main steam throttle pressure transmitter A,
2. Main steam throttle pressure transmitter B,
3. Main steam throttle pressure transmitter C,
4. Main steam pressure setpoint,
5. Bypass valve position indication and controls, and
6. Main steam throttle, governor, reheat stop, and intercept valve position indication, and controls.

g. Protection system interface

The DEH control system is designed as a fail-safe, fault tolerant, redundant digital electro-hydraulic control system. The control system is designed to fail in a manner that is within the protection system capability for coping. See Section 3.5.1.3 for turbine missile protection and Section 10.2 for overspeed protection features.

7.7.1.6 Neutron Monitoring System - Traversing In-Core Probe

7.7.1.6.1 Function

Flux readings along the axial length of the core are obtained by fully inserting the traversing ion chamber into one of the calibration guide tubes, then taking data as the chamber is withdrawn. The analog data is available for driving a recorder and for use by the process computer. One traversing ion chamber and its associated drive mechanism is provided for each group of seven to nine fixed in-core assemblies.

7.7.1.6.2 Operation

The number of TIP machines is indicated in Figure 7.6-10. The TIP machines have the following components:

a. One TIP detector,
b. One drive mechanism,
c. One indexing mechanism, and
d. Up to 10 in-core guide tubes.

The system allows calibration of LPRM signals by correlating TIP signals to LPRM signals as the TIP is positioned in various radial and axial locations in the core. The guide tubes inside the reactor are divided into groups. Each group has its own associated TIP machine.

A TIP drive mechanism uses a fission chamber attached to a flexible drive cable (Figure 7.7-11). The cable is driven from outside the drywell by a gearbox assembly. The flexible cable is contained by guide tubes that penetrate the reactor core. The guide tubes are a part of the LPRM detector assembly. The indexing mechanism allows the use of a single detector in any one of 10 different tube paths. The tenth tube is used for TIP cross calibration with the other TIP machines. The control system provides for both manual and semiautomatic operation. Electronics of the TIP panel amplify and provide the TIP signal. Core position versus neutron flux may be recorded on the X-Y recorder in the main control room and is provided to the process computer. A block diagram of the drive system is shown in Figure 7.6-10. Actual operating experience has shown the system to reproduce within approximately 1.0% of full scale in a sequence of tests.

A valve system is provided with a valve on each guide tube entering the drywell. A ball valve and a cable shearing valve are mounted in the guide tubing just outside the drywell. The ball valves are closed except when the TIP is in operation. They maintain the leaktightness integrity of the drywell. A valve is also provided for a nitrogen gas purge line to the indexing mechanisms. A guide tube ball valve opens only when the TIP is being inserted. The shear valve is used only if containment isolation is required and the ball valve cannot be isolated. The shear valve, which is controlled by a manually operated key lock switch, can cut the cable and close off the guide tube. The shear valves are actuated by explosive squibs.

The continuity of the squib circuits is monitored by indicator lights in the main control room. On receipt of containment isolation command from the NSSS, all detectors which are not withdrawn into the shield are withdrawn at full speed, removing the TIP detector from the containment and allowing the ball valves to close. The purge valve is also closed at this time.

7.7.1.7 Neutron Monitoring System - Source Range Monitor

7.7.1.7.1 Function

The SRM provides neutron flux information during reactor startup and low flux level operations.

7.7.1.7.2 Operation

There are four SRM channels. Each includes one detector that can be physically positioned in the core from the control room (see Figures 7.6-8 and 7.7-10).

The detectors are inserted into the core for a reactor startup. They can be withdrawn if the indicated count rate is between preset limits or if the IRM is on the third range or above (see Figure 7.6-10).

During initial fuel load neutron flux was monitored by source range neutron monitoring channels, providing a scram signal when the preset flux level of any channel has been reached. The logic was removed from the scram circuitry after initial fueling by the installation of "shorting links."

The "shorting links" may be periodically removed from the RPS circuitry during control rod withdrawal to perform a shutdown margin demonstration. See Section 7.2.1.1 for the verification requirement for "shorting links" removal.

Each detector assembly consists of a miniature fission chamber and a low-noise, quartz-fiber-insulated transmission cable. The sensitivity of the detector is 1.2×10^{-3} cps/nv nominal, 5.0×10^{-4} cps/nv minimum, and 2.5×10^{-3} cps/nv maximum. The detector cable is connected underneath the reactor vessel to the multiple-shielded coaxial cable. This shielded cable carries the pulses of a pulse current preamplifier located outside the drywell.

The detector and cable are located inside the reactor vessel in a dry tube sealed against reactor vessel pressure. A remote controlled detector drive system moves the detector along the dry tube. Vertical positioning of the chamber is possible from above the centerline of the active length of fuel to 30 in. below the reactor fuel region (see Figures 7.6-6 and 7.6-5). When a detector arrives at a travel end point, detector motion is automatically stopped. The SRM/IRM drive control arrangement and logic are presented in Figures 7.6-6 and 7.6-3. The electronics for the SRMs, their trips, and their bypasses are located in four cabinets. Source range signal conditioning equipment is designed so that it can also be used for open vessel experiments.

A current pulse preamplifier provides amplification and impedance matching for the signal conditioning electronics (Figure 7.7-10).

The signal conditioning equipment converts the current pulses to analog dc currents and voltages that correspond to the logarithm of the count rate (LCR). The equipment also derives the period. The output is displayed on front panel meters and is provided to remote meters and recorders. The LCR meter displays the rate of occurrence of the input current pulses. The period meter displays the time in seconds for the count rate to change by a factor of 2.7. In addition, the equipment contains integral test and calibration circuits, trip circuits, power supplies, and selector circuits.

The trip outputs of the SRM operate in the fail-safe mode. Loss of power to the SRM causes the associated outputs to become tripped.

The SRM provides signals indicating SRM upscale, downscale, inoperative, and incorrect detector position to the RMCS to block rod withdrawal under certain conditions. Any SRM channel can initiate a rod block. These rod blocking functions are discussed in Section 7.7.1.2.2.

One of the four SRM channels can be bypassed at any one time by the operation of a switch on the operator's control panel.

Inspection and testing are performed as required on the SRM detector drive mechanism; the mechanism can be checked for full insertion and retraction capability. The various combinations of SRM trips can be introduced to ensure the operability of the rod blocking functions.

7.7.1.8 Neutron Monitoring System - Rod Block Monitor

7.7.1.8.1 Function

The purpose of the RBM is to limit control rod withdrawal if localized neutron flux exceeds a predetermined setpoint during operator control rod manipulations.

7.7.1.8.2 Operation

The RBM has two channels. Each channel uses input signals from a number of LPRM channels. A trip signal from either RBM channel initiates a rod block. One RBM channel can be bypassed at any time without loss of subsystem function. The minimum number of LPRM inputs required for each RBM channel to prevent an instrument inoperative alarm is four when using four LPRM assemblies, three when using three LPRM assemblies, and two when using two LPRM assemblies, see Figures 7.7-12 and 7.6-3.

The RBM signal is generated by averaging a set of LPRM signals. The LPRM signals used depends on the control rod selected. Upon selection of a rod for withdrawal or insertion, the

conditioned signals from the LPRMs around that rod will be automatically selected by the two RBM channels. For a typical non-edge rod, each RBM channel averages LPRM inputs from two of the four B-level and D-level detectors, and all four of the C-level detectors. A-level LPRM detectors are not included in the RBM averages, but are displayed to the operator. If a detector has been bypassed in the LPRM system, that detector is automatically deleted from the RBM processing and the averaging logic is adjusted to average only the remaining unbypassed detectors.

After selection of a control rod, each RBM channel calculates the average of the related LPRM detectors and calculates a gain factor that adjusts the average to 100. Thereafter, until another rod is selected, the gain factor is applied to the LPRM average to obtain the RBM signal value. The RBM signal value is compared to RBM trip setpoints.

When a peripheral rod is selected or the RBMs associated Reference APRM power signal is below the automatic bypass level, the RBM function is automatically bypassed, the rod block outputs are set to "permissive", and the RBM average is set to zero.

If the Reference APRM is bypassed, the APRM power signal is automatically provided by a second APRM. In the operating range, the RBM signal is accurate to approximately 1% of full-scale.

The RBM has three upscale trip levels and one downscale trip level. Figure 7.7-17 illustrates the trip setpoints. The percent rated power input used to automatically select the applicable RBM trip is provided in the form of simulated thermal power from the RBM channel's Reference APRM.

With increasing or decreasing power, the RBM setpoint automatically changes to the higher or lower rod block setpoint line based on the APRM simulated thermal power input. No operator action is required.

7.7.1.9 Process Computer System

7.7.1.9.1 Function

The function of the process computer is to provide a real time plant data collection, processing, and output system that is designed to support the following:

a. Input of real time plant data simultaneously from both TDAS and PPCRS multiple sources,

b. Processing of plant input data parameters to produce results in "engineering units,"

c. Compare plant inputs against alarm ranges,

d. Output alarm information and other pertinent information to the real time HMI displays,

e. Historical archiving of monitored plant data to circular files.

7.7.1.9.2 Operation

The process computer is half of an integrated dual processor telemetry processing system that provides redundant PPCRS and TDAS functions. With the exception of the data acquisition hardware, the software and hardware is identical between the PPCRS and TDAS system. This duplication provides manual failover capability in the event of a failure on either system. The configuration of the process computer, since redundant to TDAS, is described in Section 7.7.1.15.3 and shown in Figure 7.7-16.

The Human Machine Interface (HMI) is provided through redundant computer work stations. These workstations, as shown in Figure 7.7-16, consist of a Data Acquisition Control Module, Calculation Module and Real Time Display Module. The user (Control Room personnel) accesses these modules by a menu system.

The Data Acquisition Control Module provides the user the capability of stopping and starting the receipt of data from different sources and the transmission of data to other receiving processes. Each source deposits its specific data in the Current Value Table (CVT) for use by other modules. These sources include the RWM, TIP, Alarm, Core Monitoring System Code, and the data acquisition preprocessor. Data can only be sent to PDIS. Sending data to PDIS can be started or stopped by the Data Acquisition Control Module. Screens are provided to monitor the health/status of each function.

The Calculation Module derives information (Plant Data) from the CVT, performs predefined calculations and deposits the results back into the CVT at prescribed frequencies. These calculations include core thermal power, corrected flows, and time averages. The results are then available in the CVT and to the Real Time Display Module.

The Real Time Display Module provides the capability to examine data from all the data sources via the CVT and present them in various formats. These displays are in the form of strip charts, alphanumeric scrolling, and non-scrolling and mimic displays.

The process computer monitors and alarm checks each analog variable at a selectable rate of up to 20 times/sec. Each digital plant input to the process computer can be monitored and alarm checked at up to 250 times/sec. For all analog inputs two types of limit checking and alarming are available: process alarm high/low limits and high/low instrument range limits. Both printed and historical disk storage are provided for analog and digital system alarms.

All alarms logs are printed on the alarm printing device informing the control room personnel of computer system malfunctions, system operation exceeding acceptable limits, and potential unreasonable, off normal, or failed input sensors.

7.7.1.10 Rod Worth Minimizer Function

7.7.1.10.1 Function

The RWM functions to assist and supplement the operator with an effective backup control rod monitoring routine that enforces adherence to established startup, shutdown, and low power level control rod sequences. The RWM computer prevents the operator from establishing control rod patterns that are not consistent with the pre-stored RWM sequence by initiating appropriate rod withdrawal block, and rod insert block interlock signals to the RMCS rod block circuitry (see Figure 7.7-3). The RWM sequence stored in the computer memory are based on control rod withdrawal procedures designed to limit (and thereby minimize) individual control rod worths to acceptable levels as determined by the design basis rod drop accident.

7.7.1.10.2 Operation

The RWM function does not interfere with normal reactor operation, and in the event of a failure does not itself cause rod patterns to be established. The RWM will not function on loss of offsite power. The RWM function can be bypassed and its block function can be disabled only by specific procedural control initiated by the operator.

For the operator to bypass the RWM

a. Plant management approval is required,

b. A second operator or technically qualified plant staff member, with no other duties, is required to verify the first operator's actions while the first operator is performing rod movements,

c. The startup and shutdown sequences with their respective signoff sheets are provided to the second operator for verification of each step rod movement made by the first operator, and

d. The startup and shutdown sequences follow the same control rod patterns that the RWM enforces if it were not bypassed.

The following operator and sensor inputs are used by the RWM:

a. Rod test. In selecting this input, the operator is permitted to withdraw and reinsert one control rod at a time while all other control rods are maintained in the fully inserted position;

b. Normal/bypass mode. A key lock switch permits the operator to apply permissives to RWM rod block functions at any time during plant operation;

c. System start/reset. This input is initiated by the operator to start or restart the RWM programs and system at any time during plant operation;

d. Control rod select. Binary coded identification of the control rod selected by the operator;

e. Control rod position. Binary coded identification of the selected control rod position;

f. Control rod drive selected and driving. The RWM program uses this input as a logic diagnostic verification of the integrity of the rod select input data;

g. Control rod drift. The RWM program recognizes a position change of any control rod using the control rod drift signal input;

h. Reactor power level. Flow signals are used to implement two digital inputs to permit program control of the RWM function. These two inputs, the low power setpoint (LPSP) and the low power alarm setpoint, are used to disable/alarm the RWM function at power levels above the intended service range of the RWM function;

i. Permissive echoes. Rod withdraw and rod insert permissive echo inputs are used by the RWM as a verification "echo" feedback to the system hardware to ensure proper response of an RWM output; and

j. Diagnostic inputs. The RWM uses selected diagnostic inputs to verify the integrity and performance of the processor.

Isolated contact outputs to plant instrumentation provide RWM rod block functions to the RMCS to permit or inhibit withdrawal or insertion of a control rod. These actions do not affect any normal instrumentation displays associated with the selection of a control rod.

The RWM control panel provides the following indication:

a. Insert error. Control rod coordinate identification for as many as two insert errors;

b. Withdrawal error. Control rod coordinate identification for one withdrawal error;

c. Latch group identification of the RWM sequence group number currently enforced by the computer;

d. Rod test select indicates that the rod test function test selected by the operator was honored by the RWM Program;

e. RWM bypass - indicates that the RWM is manually bypassed;

f. Select error - indicates a control rod selection error;

g. Rod blocks - indication that a withdrawal block or insertion block is in effect for all control rods;

h. Out of sequence indication that the actual rod patterns is out of sequence;

i. Below LPSP. Indication that the reactor core power is below the LPSP;

j. Below low power alarm point (LPAP). Indication that the reactor core power is below the LPAP; and

k. Rod drift. Indication that a rod drift condition is detected.

DELETED

DELETED

7.7.1.12 Loose Parts Detection System

The LPDS has been deactivated and spared-in-place (retired). The System mainframe panel (LPDS-PNL-1) remains installed on the 522 ft. level of the Reactor Building. The accelerometer charge-converters (pre-amps) remain installed inside containment, except those posing interference. All power to the system has been disconnected and the cables "spared."

7.7.1.13 Refueling Interlocks

7.7.1.13.1 Function

The purpose of the refueling interlocks is to restrict the movement of control rods and the operation of the refueling platform. Refueling interlocks are shown in Table 7.7-3. This reinforces operational procedures that prevent the reactor from becoming critical during refueling operations.

7.7.1.13.2 Operation

The refueling interlocks circuitry senses the condition of the refueling platform and the control rods to prevent the movement of the refueling platform or withdrawal of control rods (rod block). Redundant circuitry is provided to sense the following conditions:

a. All rods inserted,

b. Refueling platform positioned near or over the core,

c. Refueling platform hoists fuel loaded (main - fuel grapple, auxiliary - frame mounted hoist, monorail - trolley mounted hoist), and

d. Reactor mode switch in "refuel" position.

The indicated conditions are combined in logic circuits to satisfy all restrictions on refueling equipment operations and control rod movement (Figure 7.7-2). The rod-in condition for each rod is established by the closure of a magnetically operated reed switch in the rod position indicator probe.

The rod-in switch must be closed for each rod before the all-rods-in signal is generated. Loss of "all-rods-in" signal will remove grapple control power, if the refueling platform is over the core.

During refueling operations, no more than one control rod is permitted to be withdrawn; this is enforced by a redundant logic circuit that uses the all-rods-in signal and a rod selection signal from the RMCS to prevent the selection of a second rod for movement. The simultaneous selection of two control rods is prevented by the interconnection arrangement of the select push buttons. With the mode switch in the refuel position, the circuitry prevents the withdrawal of more than one control rod and the movement of the loaded refueling platform over the core with any control rod withdrawn.

Operation of refueling equipment is prevented by interrupting the power supply to the equipment. The refueling platform is provided with two mechanical switches attached to the platform, which are tripped open by a long, stationary ramp mounted adjacent to the platform rail. The switches open before the platform or any of its hoists are physically located over the reactor vessel to indicate the approach of the platform toward its position over the core.

In addition to the non-safety-related rod block interlocks provided by the RMCS, and as a safety-related backup, the IRMs provide a rod scram signal during refueling when neutron flux exceeds a preset flux level. The scram signal will provide a control room alarm and will insert any control rod that is withdrawn. The IRMs are required to be operable anytime a control rod is withdrawn in a fueled cell during refueling operations.

Load cell readout is provided for all hoists. The main hoist load is displayed on the flat panel display on the main trolley. The auxiliary frame hoist and the monorail hoist load displays are on the frame pendant and monorail pendant, respectively. Load sensing is via electronic load cells and strain gauge transmitters. The load for the main hoist and frame hoist are inputs to the PLC in the control center on the main trolley. Associated interlock and load functions for the main hoist and auxiliary frame hoist are performed by the PLC. Setpoint modules provide associated interlock and load functions for the monorail hoist.

The three hoists on the refueling platform are provided with switches that open when the hoists are fuel loaded. The switches open at a load weight that is lighter than that of a single fuel assembly. This indicates when fuel is loaded on any hoist.

A bypass plug for the previously installed service platform hoist load interlock is provided which completes the circuit, preventing a false indication that the nonexistent hoist is loaded. Loaded hoist indication prevents control rod withdrawal with the mode switch in the startup or refuel positions. The bypass plug allows control rod movement in this situation. The bypass plug is physically arranged to prevent the connection of any power plug unless the bypass plug is removed.

The rod block interlocks and refueling platform interlocks provide two independent levels of interlock action. The interlocks which restrict operation of the refueling platform hoist and grapple provide a third level of interlock action since they would be required only after a failure of a rod block and refueling platform interlock.

In the refueling mode, the control room operator has an indicator light for "refueling mode select permissive" whenever all control rods are fully inserted. He can compare this indication with control rod position data from the computer as well as control rod in-out status on the full core status display. Whenever a control rod withdrawal block situation occurs, the operator receives annunciation and computer logs of the rod block. The operator can compare these outputs with the status of the variable providing the rod block condition. Both channels of the control rod withdrawal interlocks must agree that permissive conditions exist to move control rods; otherwise, a control rod withdrawal block occurs. Failure of one channel may initiate a rod withdrawal block, and will not prevent application of a valid control rod withdrawal block from the remaining operable channel (see Figure 7.7-2).

Refueling platform interlock indication and main hoist load are displayed to the operator on the flat panel display mounted on the trolley cable. In addition, the bridge, trolley, and main hoist positions displays are on the flat panel display.

The auxiliary frame hoist load and the monorail hoist load are displayed on digital displays on the frame pendant and monorail pendant, respectively. Individual push button and control switches are provided for local control of the platform and its hoists. The platform operator can immediately determine whether the platform and hoists are responding to his local instructions, and can, in conjunction with the control room operator, verify proper operation of each of the three categories of interlocks listed previously.

7.7.1.14 Safety/Relief Valves - Relief Function

7.7.1.14.1 Function

The relief function of the SRVs is to relieve high pressure conditions in the nuclear system that could lead to the failure of the RCPB. The system activates the SRVs to vent steam to the suppression pool and reduce reactor pressure. See Section 5.2.2. Also, see Section 7.3.1.1.1.2 for the ADS function of selected SRVs.

7.7.1.14.2 Operation

Schematic arrangement of system mechanical equipment is shown in Figure 10.3-2. The SRV component control logic is shown in Figure 7.3-8.

The relief function of the SRVs is initiated by pressure switches, one per relief valve. These pressure switches are set to energize the relief valve solenoids in five groups at five respective trip settings. The relief valves will open in groups, the lowest setpoint group first, followed by groups of SRVs at progressively higher setpoints. This feature automatically adjusts the relief capacity to the magnitude of the over pressure condition. The reclose pressure for each SRV is based on the deadband (reset) of the associated pressure switches. Adequate deadband is provided to eliminate rapid open/close operation and minimize system stresses.

To manually open each SRV, remote manual switches are installed in the control room. Lights on the control room panel indicate when the SRVs are open. This monitoring is in accordance with NUREG-0737, Item II.D.3 (see Section 7.5.1.9).

7.7.1.15 Transient Data Acquisition System

To meet the data acquisition and analysis needs during the operation of Columbia Generating Station, and to support emergency response facility functions, a plant data center, referred to as the Plant Data Information System (PDIS), is installed at Columbia Generating Station. The PDIS configuration is shown in Figure 7.7-16. The TDAS, the front end of PDIS, collects and multiplexes plant analog and digital data to a central location for storage and emergency response facility functions such as the graphic display system (GDS) described in Section 7.5.1.22, and the emergency response data system (ERDS), which provides direct electronic data transmission of the required plant parameters from the TDAS computer to the NRC Operations Center. The plant ERDS computer receives data from the TDAS and the process computer system described in Section 7.7.1.9 and transmits it to the Operations Center via secure Internet-based communication protocol. The ERDS was added in response to Generic Letter 89-15, Emergency Response Data System.

7.7.1.15.1 Function

The purpose of the TDAS is to provide a data control center for the acquisition, monitoring, recording, and transfer of data to a computer for analysis and presentation for plant monitoring, testing and emergency response facility functions for selected plant parameters.

7.7.1.15.2 Description

The basis and criteria for the TDAS input signal selection is as follows:

Basis	Criteria
Startup testing requirement	Regulatory Guide 1.68 SRP Section 3.9.2 FSAR Section 3.9.2
Emergency response facility requirement	Regulatory Guide 1.23 Regulatory Guide 1.97 NUREG-0737, Supplement 1 FSAR Section 7.1.1

Signals monitored may be either analog or digital (bilevel). The majority of the signals originate from existing equipment in the control room. Signals are hard-wired from the control room to TDAS remote modules (multiplexers). The remote modules provide the following:

a. Electrical isolation,
b. Signal conditioning,
c. Analog to digital conversion,
d. Multiplexing of the input data, and
e. Interface to fiber-optic cables.

The signal output from the remote modules is transmitted through fiber-optic cables to the TDAS central control unit (CCU). The fiber-optic cables provide electrical separation between remote module output signals.

The TDAS CCU controls the monitoring, recording, engineering unit conversion, alarming, and transfer functions. Discs are used for high speed storage of historical data.

Data is transferred from the TDAS CCU to a computer for data reduction, analysis, and display. A system console connected directly to TDAS is provided for operator interface.

7.7.1.15.3 Operation

TDAS automatically records data from all input points on disc. Data is continuously overlaid on the disc such that in excess of three days of data exists at all times.

A secondary file can be created and archived from the history disk to preserve the data. The data contained in the secondary file can subsequently be displayed and printed.

Three data transfer interfaces are provided by the TDAS CCU. One link is dedicated for the transfer of data to the computer to support the control room GDS displays. The second link transfers TDAS real time data to the Process Computer work stations as user interface. The third link transfers data to the corporate network for use in ERDS and other data reporting services. As noted in Section 7.7.1.9.2, the TDAS hardware (excluding signal interface) software is identical in function and configuration to the Process Computer. This provides total computer redundancy.

7.7.1.15.4 Conformance to NRC Regulatory Guides

7.7.1.15.4.1 Regulatory Guide 1.75, Revision 2, Physical Independence of Electric Systems. Regulatory Guide 1.75 is not applicable to Columbia Generating Station. However, based on commitment to the NRC the TDAS isolator design used the guidance provided in Regulatory Guide 1.75, Revision 2.

The TDAS is a non-safety-related, non-Class 1E system which interfaces with many safety-related components. To ensure that the safety-related components are protected from TDAS equipment failures, the following was implemented in the TDAS design:

a. All TDAS input circuits within raceways are identified and routed to Class 1E requirements up to a remote isolation device. From the isolation device to the remote multiplexer the circuits are considered to be non-Class 1E;

b. Remote multiplexer outputs are transmitted to the computer via a fiber optic cable which is inherently an isolation device. The fiber optic cable, therefore, can be routed in any raceway without regard to separation criteria; and

c. Transient data acquisition system Class 1E input isolators are supplied from non-Class 1E 24-V dc current limiting power supplies. The power source to these power supplies is Class 1E and is provided with a Class 1E current interrupting device. The circuit to the power supply is routed as prime (see Section 8.3.1.4) for Division 1 and 2 isolators and as Class 1E for the Division 3 isolator. The power supply section of the isolator unit is internally isolated from the Class 1E signal input circuit. Downstream of the power supply, the circuits are treated as non-Class 1E.

   All Class 1E components of the TDAS are qualified according to the requirements of Regulatory Guide 1.100 as clarified in Section 1.8.3. All components which interface with Class 1E circuitry (isolation devices) to extract signals are qualified (if applicable) according to the requirements of Regulatory Guide 1.89, Revision 1 as clarified in Section 1.8.3.

7.7.1.15.4.2 NUREG-0737, Supplement 1, Clarification of TMI Action Plan Requirements: Requirements for Emergency Response Capabilities. Parameters identified in Regulatory Guide 1.97, Revision 2, and Regulatory Guide 1.23 are hard-wired to the TDAS. The TDAS components are designed in a modular fashion with spare capacity. The system design allows the capability to expand. Physical separation or isolation devices prevent failures in the TDAS from interfering with safety-related or sensitive control functions. The TDAS components are powered from a highly reliable uninterruptible power source to ensure system availability and that power fluctuations will not result in the loss of software or stored data.

The TDAS provides the equipment needed to gather, store, and transfer data helpful in assessing plant conditions. The system provides in excess of three days of pre-event data and the capability of recording post-event data. Data storage and retrieval functions are performed without interrupting real time data transfer. Data scan rates are more than sufficient to record transient events and determine the sequence of events.

The TDAS has been designed to provide a high degree of reliability and redundancy with the Process Computer. Emergency and preventive maintenance procedures have been established. Spare parts or redundant processing is provided for critical components. Tests are performed to verify that the hardware and software meet performance requirements. Hardware and software modifications are performed in accordance with applicable procedures.

7.7.1.16 Design Differences

See Table 7.7-2 for a list of system designs and their similarity of designs of other nuclear power plants.

7.7.2 ANALYSIS

See the safety evaluations in Chapter 15. Chapter 15 shows that the systems described in this section are not used to provide any design basis accident safety function. Safety functions are provided by other systems.

Chapter 15 also evaluates all credible control system failure modes, the effects of those failures on plant functions, and the response of various safety-related systems to those failures.

The major plant control systems described above have no direct interface with any safety-related systems and, thus control system failures other than those described in Chapter 15 have no effect on the safety-related systems.

Table 7.7-1

Design and Supply Responsibility of
Plant Control Systems

System	GE Design	GE Supply	B&R Design	Others Supply
Reactor vessel instrumentation	X	X		
Reactor manual control	X	X		
Recirculation flow control	X	X		
Feedwater control	X	X		X
Pressure regulator and turbine generator			X	X
Neutron monitoring				
Source range monitor	X	X		
Rod block monitor	X	X		
Transversing in-core probe	X	X		
Process computer and RWM				X
Rod sequence control	X	X		
Loose parts detection (Retired)				
Refueling interlocks	X	X		
Safety/relief valve	X	X		
Transient data acquisition			X	X

Table 7.7-2

Similarity to Licensed Reactors

Instrumentation and Controls System	Plants Applying for or Having Construction Permit or Operating License	Similarity of Design
Neutron monitoring (TIP, SRM, RBM)	LaSalle	Identical
Refueling interlocks	LaSalle	Identical
Reactor manual control	Zimmer-1	Identical
Reactor vessel - instrumentation	Zimmer-1	Identical
Recirculation flow - control	None	--
Feedwater control	None	--
Pressure regulator and turbine-generator	None	None
Rod sequence control	Zimmer-1	Identical
Refueling interlocks	Zimmer-1	Identical
Process computer and RWM	None	None
Loose parts detection (Retired)		
Safety/relief valve - relief function	Zimmer-1	Identical
Transient data acquisition	None	--

Table 7.7-3

Refueling Interlocks

Refueling Platform Position	Refueling TMH[a]	Platform FMH[a]	Hoist FG[a]	Control Rods	Mode Switch	Attempts	Results
Not near core	UL	UL	UL	All rods in	Refuel	Move refueling platform over core	No restrictions
Not near core	UL	UL	UL	All rods in	Refuel	Withdraw rods	Cannot withdraw more than one rod
Not near core	UL	UL	UL	One rod withdrawn	Refuel	Move refueling platform over core	No restrictions
Not near core	Any hoist loaded			One rod withdrawn	Refuel	Move refueling platform over core	Platform stopped before over core
Over core	UL	UL	UL	All rods in	Refuel	Withdraw rods	Cannot withdraw more than one rod
Over core	Any hoist loaded			All rods in	Refuel	Withdraw rods	Rod block
Not near core	UL	UL	UL	All rods in	Startup	Move refueling platform over core	Platform stopped before over core
Not near core	UL	UL	UL	All rods in	Startup	Withdraw rods	No restrictions
Over core	UL	UL	UL	All rods in	Startup	Withdraw rods	Rod block

Table 7.7-3

Refueling Interlocks (Continued)

[a] Legend

TMH - Trolley Mounted Hoist (Monorail)
FMH - Frame Mounted Hoist (Auxiliary)
FG - Fuel Grapple (Main Hoist)
UL - Unloaded
L - Fuel Loaded

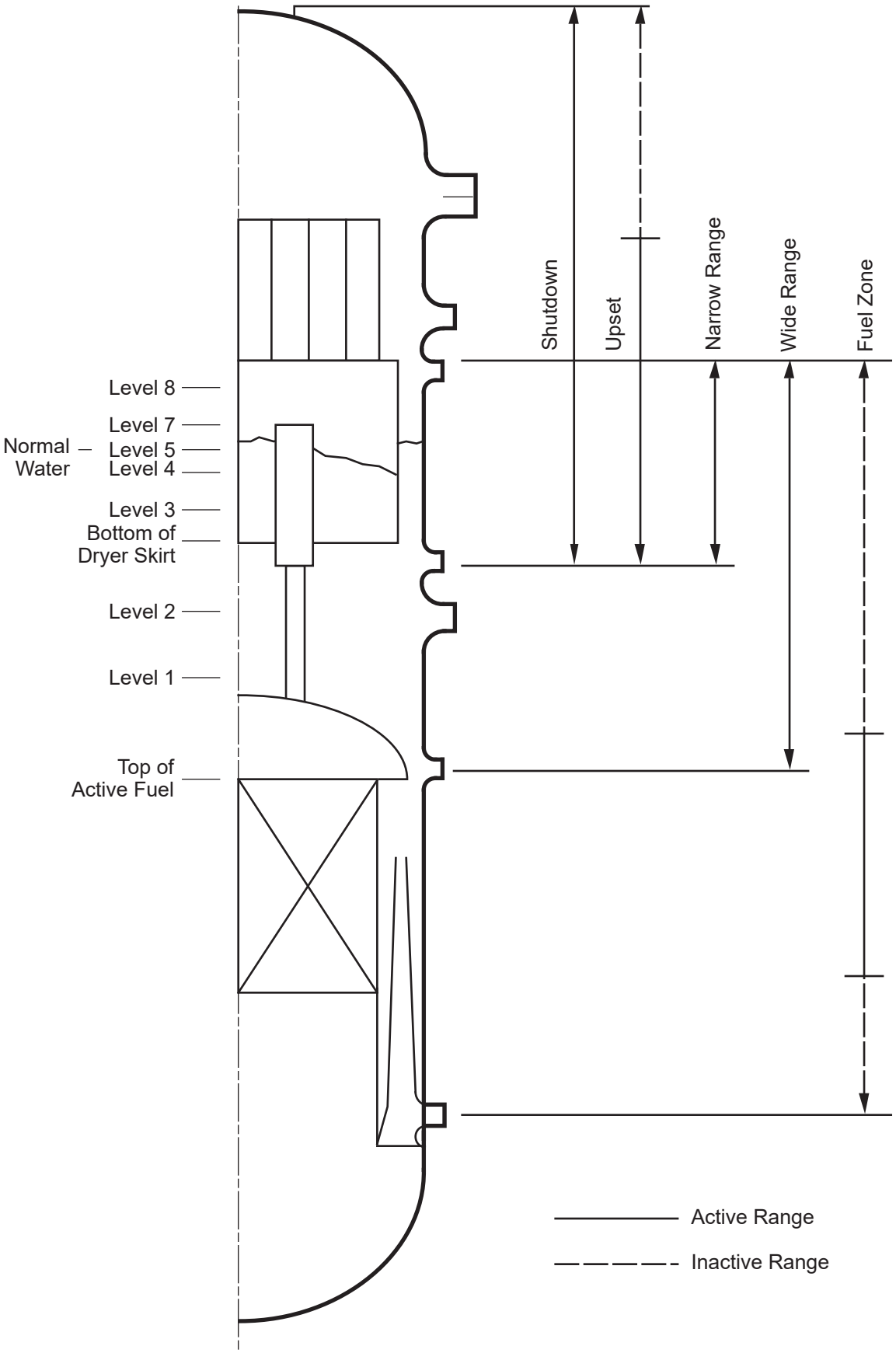

Columbia Generating Station
Final Safety Analysis Report

Water Level Range Definition

Draw. No. 920843.66	Rev.	Figure 7.7-1

TABLE 1

TIME DEPENDENT INTERMEDIATE VARIABLES

SYM.	DESCRIPTION	DEFINITION
T	INTERNALLY GENERATED TIME REFERENCE FUNCTION	
TIC	INSERT CYCLE ACTIVE	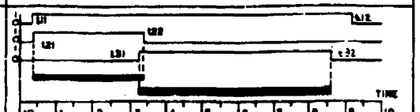
TII	INSERT PERIOD OF INSERT CYCLE	
TIS	SETTLE PERIOD OF INSERT CYCLE	
-	ROD INSERT CONTROL	
-	SETTLE CONTROL	
TOC	WITHDRAW CYCLE ACTIVE	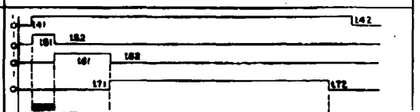
TOI	INSERT PERIOD OF WITHDRAW CYCLE	
TOO	WITHDRAW PERIOD OF WITHDRAW CYCLE	
TOS	SETTLE PERIOD OF WITHDRAW CYCLE	
-	UNLATCH CONTROL	
-	ROD WITHDRAW CONTROL	
-	SETTLE CONTROL	

ABSCISSA INDICATES TIME ELAPSED WHILE ADVANCING
THE INSERT CYCLE IS CONTROLLED BY TIC AND TIT AS FOLLOWS:

1. WHEN TIC TIT=1, THE CYCLE IS ADVANCING WITH TIME.
2. WHEN TIC = 0, THE CYCLE IS RESET TO t0
3. WHEN TIC $\overline{TIT}$ =1, THE CYCLE STOPS, BUT DOES NOT RESET.

ABSCISSA INDICATES TIME ELAPSED WHILE ADVANCING
THE WITHDRAW CYCLE IS CONTROLLED BY TOC AND TOT AS FOLLOWS:

1. WHEN TOC TOT = 1, THE CYCLE IS ADVANCING WITH TIME.
2. WHEN TOC = 0, THE CYCLE IS RESET TO t0.
3. WHEN TOC $\overline{TOT}$ = 1, THE CYCLE STOPS, BUT DOES NOT RESET.

SEE TABLE 2

TABLE 2

SYSTEM PARAMETER VALUES

	PARAMETER	VALUE	TOLERANCE	UNITS
INSERT CYCLE	t11	0.36	+0.06 -0.26	SEC.
	t12	0.16	± 0.02	
	t21	0.42		
	t22	2.82		
	t31	2.22		
	t32	0.42	± 0.02	SEC.
WITHDRAW CYCLE	t41	0.36	+0.09 -0.26	SEC.
	t42	0.16	± 0.02	
	t61	0.42		
	t62	1.02		
	t81	1.12		
	t82	2.81		
	t71	2.62		
	t72	2.81	± 0.02	SEC.

INSERT CYCLE

t31-t11 = DELAY UNTIL ROD MOTION BEGINS
t22-t21 = DRIVE IN TIME
t32-t22 = SETTLE TIME
t0 ≤ t ≤ t22 , t = TIME WHEN CONTINUOUS INSERT CAN BE REQUESTED
t31 ≤ t ≤ t22, t = CYCLE STOP POINT FOR CONTINUOUS INSERT

WITHDRAW CYCLE

t81-t41 = DELAY UNTIL ROD MOTION BEGINS
t62-t61 = DRIVE IN TIME (UNLATCH)
t81-t62 = DELAY AFTER UNLATCH
t62-t61 = DRIVE OUT TIME
t72-t62 = SETTLE TIME
t0 ≤ t ≤ t62, t = TIME WHEN CONTINUOUS WITHDRAW CAN BE REQUESTED
t71 ≤ t ≤ t62, t = CYCLE STOP POINT FOR CONTINUOUS WITHDRAW

TABLE 3

SYSTEM PERFORMANCE

	INTERVAL	PARAMETER (SEE TABLE 21	VALUE	HAS ALLOWED TIMES TO ASSURE PROPER DRIVE PERFORMANCE	UNITS
INSERT CYCLE	TIME DELAY TO ROD INSERT CONTROL	t21	0.42	0.0-0.6	SEC
	ROD INSERT CONTROL	t22-t21	2.80	2.5-3.1	SEC
	SWITCHING OVERLAP	t22-t31	0.10	0.0-1.5	SEC
	SETTLE CONTROL	t32-t22	0.30	4.2-6.3	SEC
WITHDRAW CYCLE	TIME DELAY TO UNLATCH CONTROL	t61	0.42	0-0.6	SEC
	UNLATCH CONTROL	t62-t61	0.80	0.5-0.8	SEC
	INTERVAL BETWEEN UNLATCH AND WITHDRAWAL CONTROL	t81-t62	0.10	0.0-0.15	SEC
	ROD WITHDRAWAL CONTROL	t62-t61	1.90	1.5-1.7	SEC
	SWITCH OVERLAP FROM WITHDRAWAL TO SETTLE CONTROL	t62-t71	0.10	0.0-1.5	SEC
	SETTLE CONTROL	t72-t62	6.00	4.2-6.3	SEC

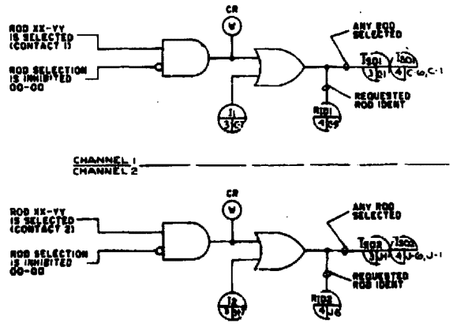

LEGEND:

- ⊖ = SWITCHGEAR DEVICE FUNCTION NUMBER ANSI SPEC C37.2
- RWM = ROD WORTH MINIMIZER
- RPIS = ROD POSITION INFORMATION SYSTEM
- NMS = NEUTRON MONITORING SYSTEM
- PRM = POWER RANGE MONITOR
- RBM = ROD BLOCK MONITOR
- SRI = SELECT ROD INSERT
- RMS = REMOTE MANUAL SWITCH

NOTES:

1. EACH CONTROL ROD, AS IT TRAVELS UP (INSERTED) OR DOWN (WITHDRAWN) PASSES A NUMBER OF SWITCHES. THE TOP TWO POSITION SWITCHES ARE CALLED "OVERTRAVEL" AND THE BOTTOM TWO POSITIONS ARE CALLED "WITHDRAWN" (BACKSEAT & DISCONNECT). SWITCHES IN BETWEEN ARE DIVIDED INTO ODD (DRIFT) AND EVEN (LATCH) POSITIONS. AS THE ROD TRAVELS OVER ANY SWITCH AN INDICATING SIGNAL IS ACTUATED. ANY EVEN SWITCH WILL INDICATE NUMERIC POSITION (eg. 00, 02....48) AND ANY ODD SWITCH WILL INDICATE "ODD".
2. WIRING FROM HCU (SCRAM VALVES AND ACCUMULATOR) TO CONTROL ROOM FOR ANNUNCIATION SHALL BE IN SERIAL CONNECTION FOR ALL HCU'S.
3. WIRING FROM HCU (ROD SCRAM TEST SWITCH IN TEST POSITION AND DISPLAY OF THOSE CONTROL RODS CHOSEN FOR "SELECT ROD INSERT FUNCTION.") SHALL BE IN SERIAL CONNECTION FOR ALL HCU'S.
4. EACH ACCUMULATOR FAILURE WILL INITIATE AN ANNUNCIATION (ANNUNCIATOR HORN & FLASHING ANNUNCIATOR WINDOW) AND AN INDIVIDUAL FLASHING INDICATOR (PART OF THE WHOLE CORE DISPLAY). OPERATION OF THE "ACCUMULATOR TROUBLE ACKNOWLEDGE" SWITCH WILL CLEAR THE INPUT TO THE ANNUNCIATOR AND CHANGE THE INDIVIDUAL INDICATOR FROM FLASHING TO STEADY. CLEARING THE ACCUMULATOR TROUBLE WILL CLEAR THE INDIVIDUAL INDICATORS.
5. SEE REF 12 FOR DEFINITIONS OF VARIABLES APPEARING ON THIS FCD.
6. A LOGICAL "1" INDICATES A FAILED COMPARISON

SYSTEM SELECTION OPTIONS ARE INDICATED BY MULTIPLE ITEM NUMBERS

REFERENCE DOCUMENTS: — APL ITEM NUMBERS

1. CONTROL ROD DRIVE HYDRAULIC SYS. P&ID — CH/C12-1010
2. NEUTRON MONITORING SYS. IED — C51-1010
3. FEEDWATER CONTROL SYS. IED — C33/C34-1010
4. FEEDWATER CONTROL SYS. DESIGN SPEC. — C33/C34-4010
5. CONTROL ROD DRIVE HYDRAULIC SYS. DESIGN SPEC. — CH/C12-4010
6. PROCESS COMPUTER SYS. INPUT/OUTPUT REQUIREMENTS — C91/C92-4010
7. POSITION INDICATOR PROBE CONNECTION DIAG. — 10482508
8. REACTOR MANUAL CONT ELEM DIAG — 807E158TC
9. NEUTRON MONITORING SYS. FCD — C51-1020
10. REACTOR PROTECTION SYS. IED — C71/C72-1010
11. FEED WATER CONT SYS IED — 732E120A
12. CONTROL ROD DRIVE CONTROL SYS ELEM DIAG — C11/C12-1050
13. REACTOR PROTECTION SYS. ELEM DIAG. — C72-1050
14. CONT ROD DRIVE HYDRAULIC SYS ELEM DIAG — C12-1060
15. SERVICE PLATFORM CONTROL SYS. — 796E252

SYMBOL DEFINITIONS:

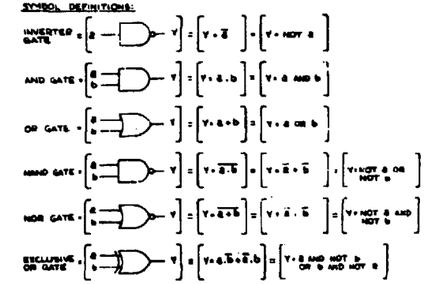

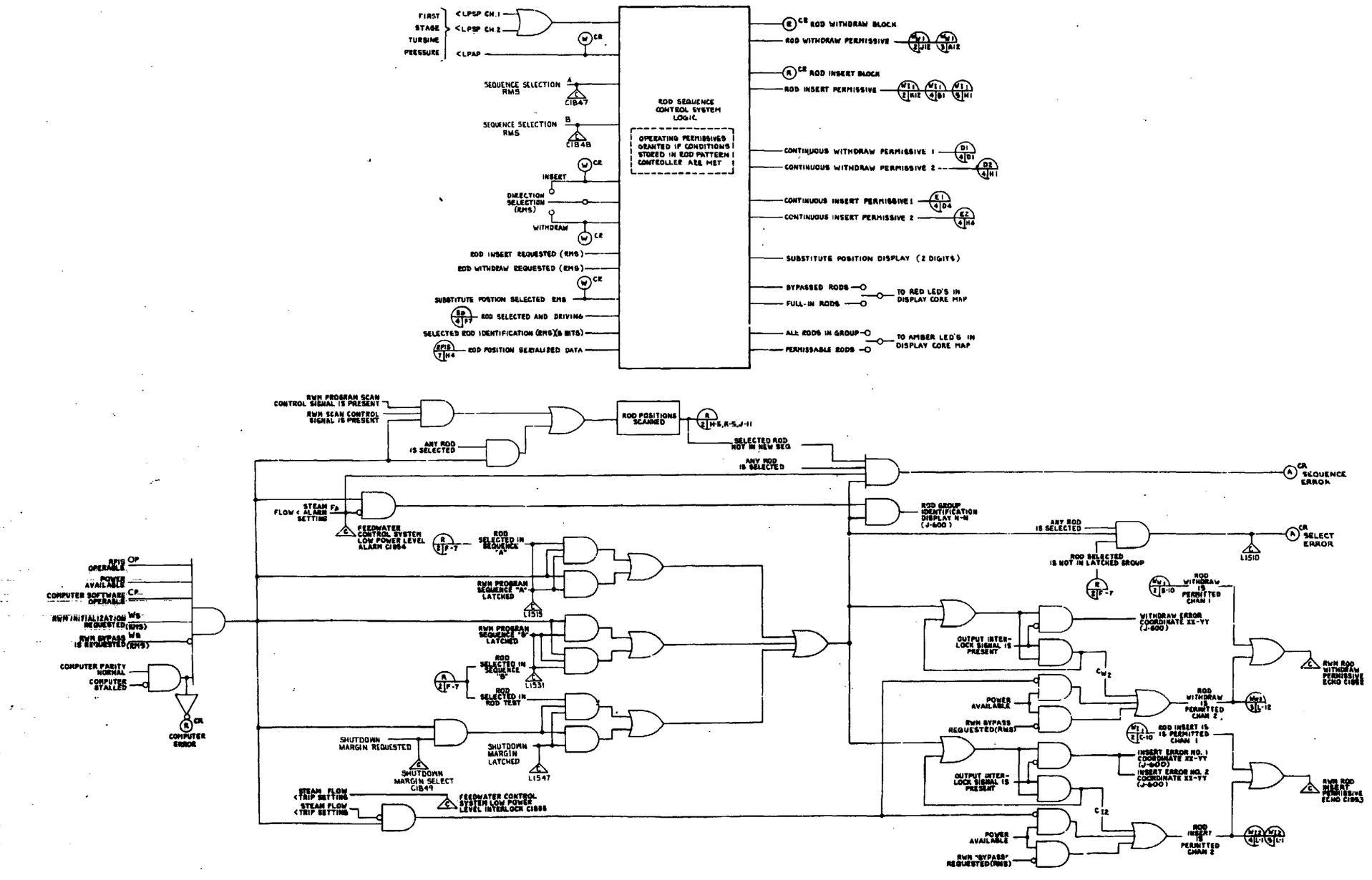

Columbia Generating Station
Final Safety Analysis Report

Control Rod Drive Hydraulic System - FCD

Draw. No. 02C12-04,24,2	Rev. 1	Figure 7.7-2.2

Form No. 960690

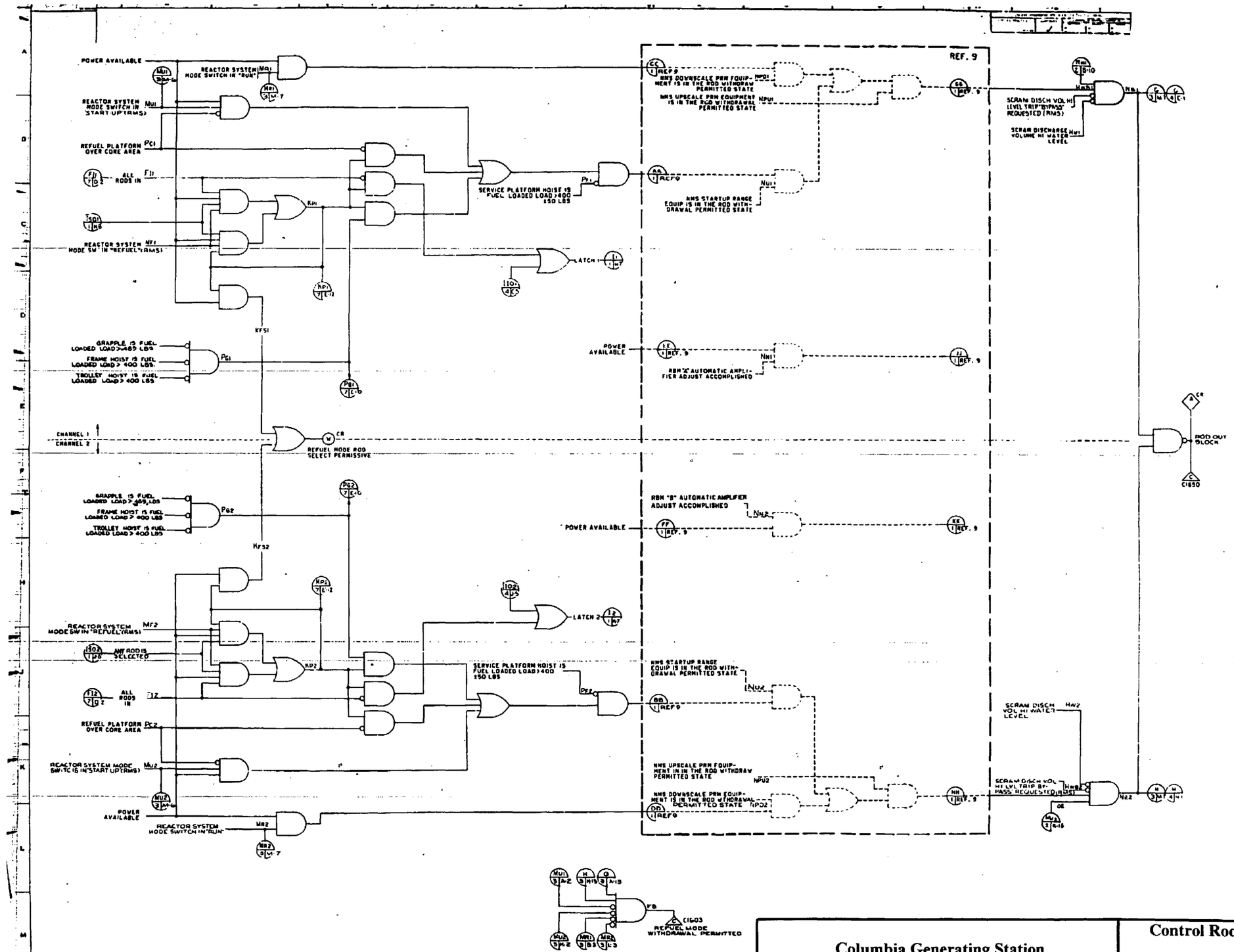

Columbia Generating Station
Final Safety Analysis Report

Control Rod Drive Hydraulic System - FCD

Draw. No. 02C12-04,24,3	Rev. 1	Figure 7.7-2.3

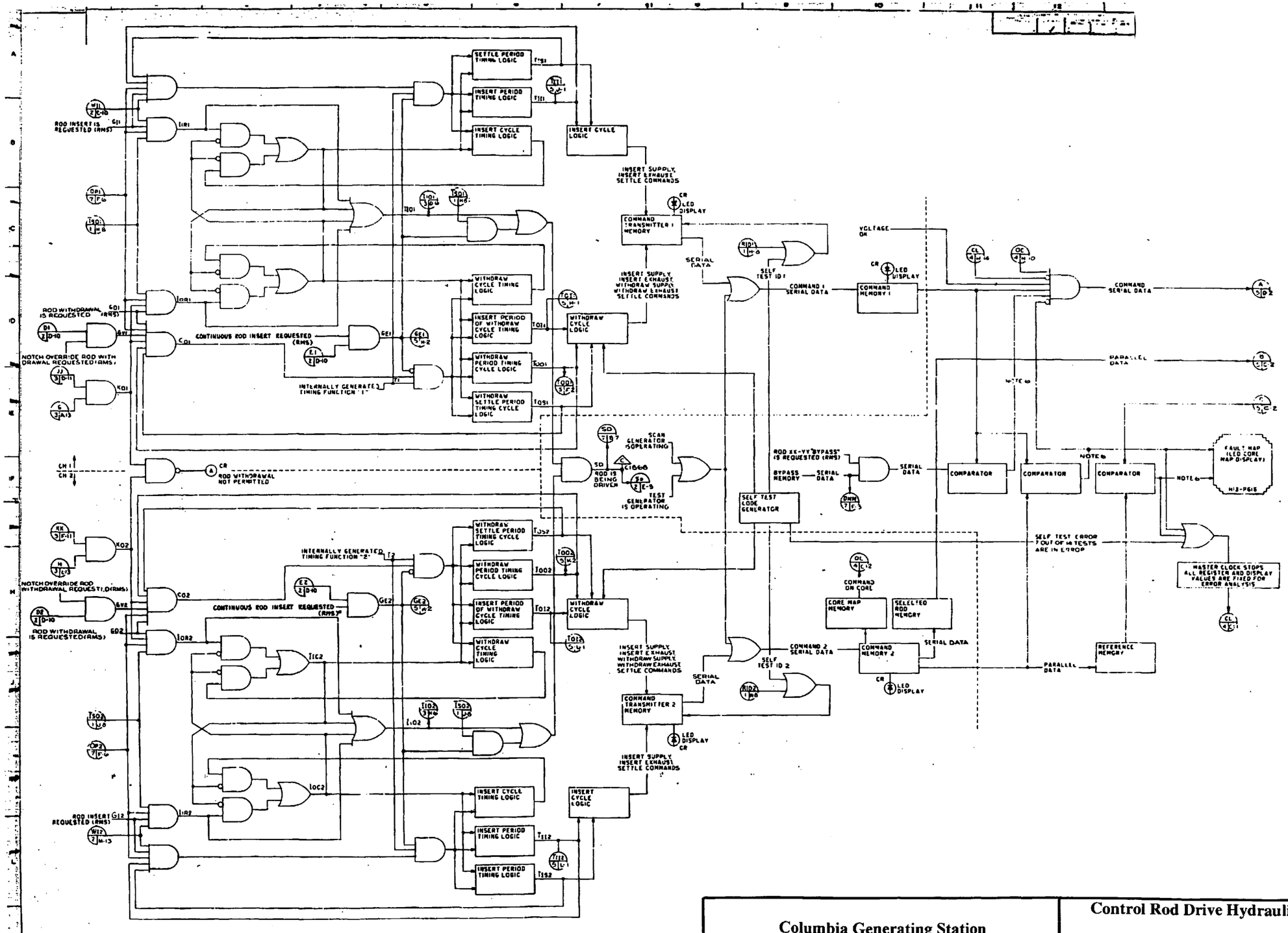

Columbia Generating Station **Final Safety Analysis Report**	**Control Rod Drive Hydraulic System - FCD**		
	Draw. No. 02C12-04,24,4	Rev. 1	Figure 7.7-2.4

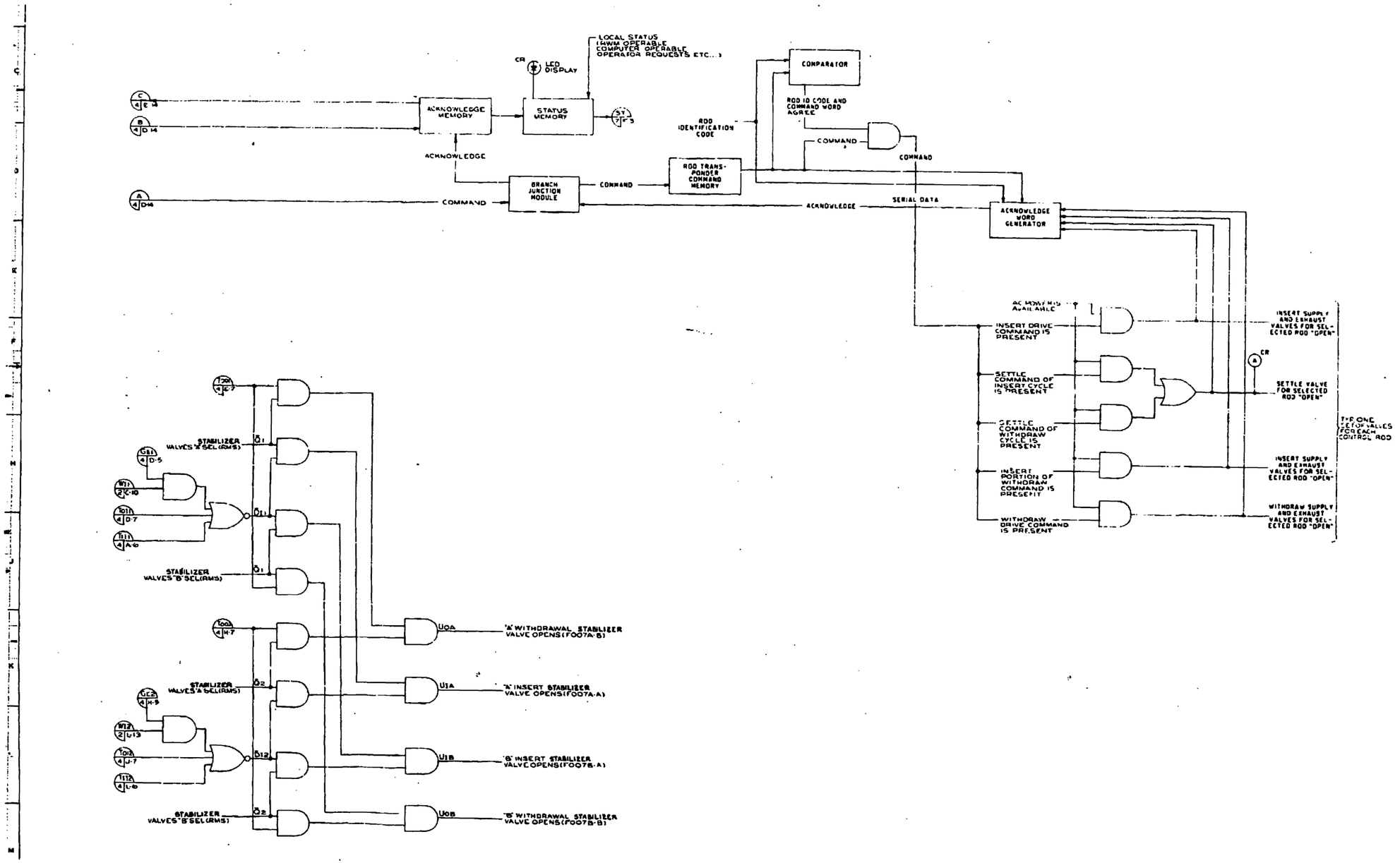

Columbia Generating Station **Final Safety Analysis Report**	**Control Rod Drive Hydraulic System - FCD**		
	Draw. No. 02C12-04,24,5	Rev. 1	Figure 7.7-2.5

TABLE 4

FUNCTION	INITIATING DEVICE	TYPE
SCRAM DISCHARGE VOLUME NOT DRAINED	LEVEL SWITCH N013F (12-N013F,H	ANN.
DRIVE WATER FILTER HIGH DIFF PRESSURE	DIFF PRESS. IND SW N002	ANN.
CHARGING WATER HIGH PRESSURE	PRESS. IND SW N600	ANN.
DRIVE WATER PUMP "A" SUCTION LOW PRESS.	PRESS. SW N001A	ANN.
DRIVE WATER PUMP "B" SUCTION LOW PRESSURE	PRESS. SW N001B	ANN.
SCRAM VALVE PILOT AIR HEADER HIGH/LOW PRESS.	PRESS SW N052	ANN.
CRD PUMP SUCTION FILTER HIGH DIFF PRESSURE	DIFF PRESS. IND SW N015	ANN.
STABILIZER VALVE SELECT SWITCH IN "A" POSITION	REMOTE MANUAL SW	IND LAMP W
STABILIZER VALVE SELECT SWITCH IN "B" POSITION	REMOTE MANUAL SW	IND LAMP W
VALVES AO F002A,B,F121, F127 & N0F003 NOT FULLY CLOSED NOT FULLY OPEN	LIMIT SWITCH ON VALVES	IND LAMP R IND LAMP G
VALVES AO F010, & AO F011, F180 & F181 FULLY OPEN PARTLY CLOSED	LIMIT SWITCH ON VALVES	IND LAMP R IND LAMP G
ACCUMULATOR LOW PRESSURE OR LEAK DETECTION (TYP FOR EACH ACCUMULATOR) (REF 13 NOTE 2)	PRESSURE SW 130 OR LEAK DET SW 129	IND LAMP A (NOTE 4)
ANY ACCUMULATOR LOW PRESSURE OR ANY ACCUMULATOR LEAKAGE	PRESSURE SW 130 OR LEAK DET SW 129	ANN H/L (NOTE 4)

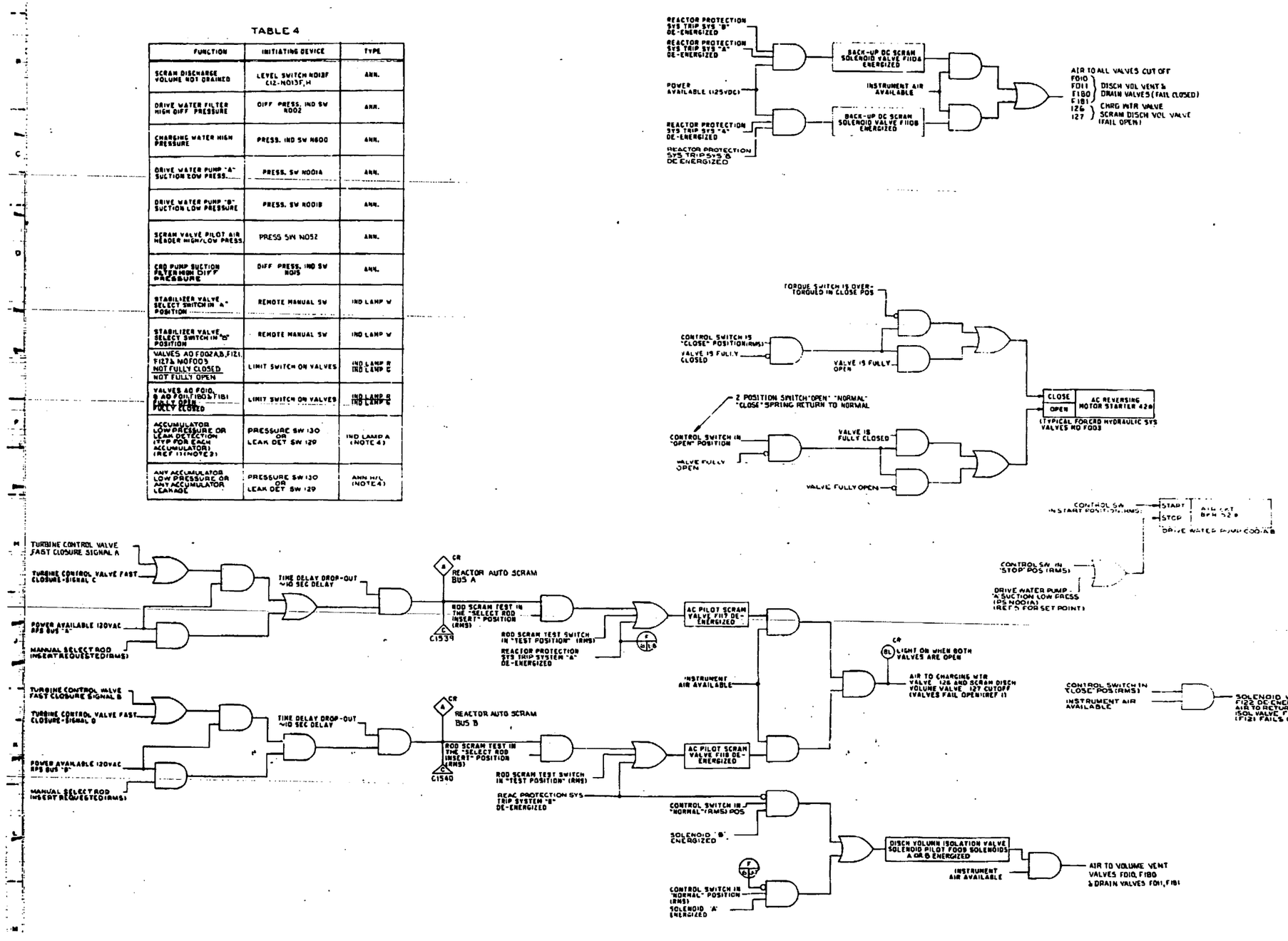

Columbia Generating Station
Final Safety Analysis Report

Control Rod Drive Hydraulic System - FCD

Draw. No. 02C12-04,24,6	Rev. 1	Figure 7.7-2.6

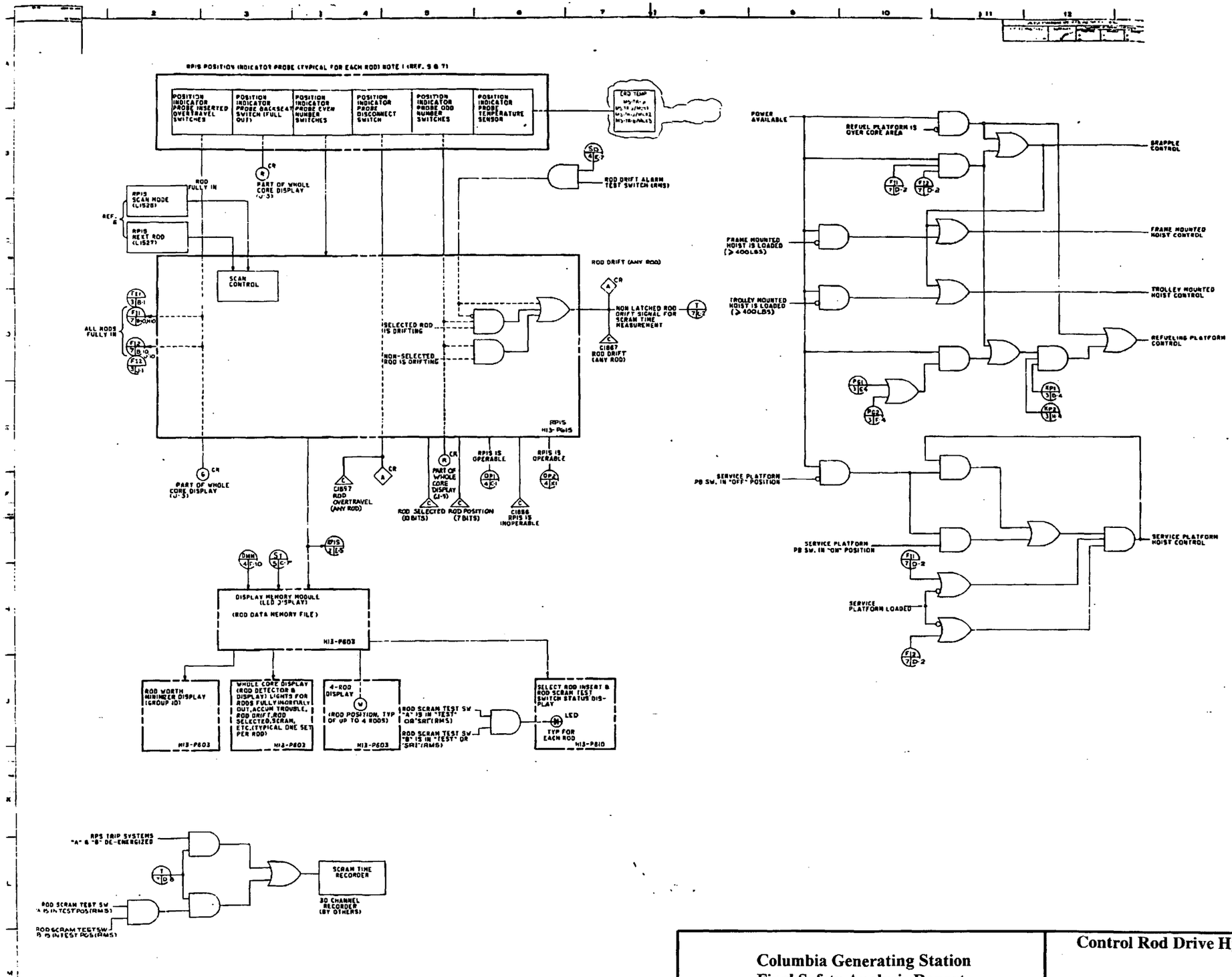

Columbia Generating Station Final Safety Analysis Report	**Control Rod Drive Hydraulic System - FCD**		
	Draw. No. 02C12-04,24,7	Rev. 2	Figure 7.7-2.7

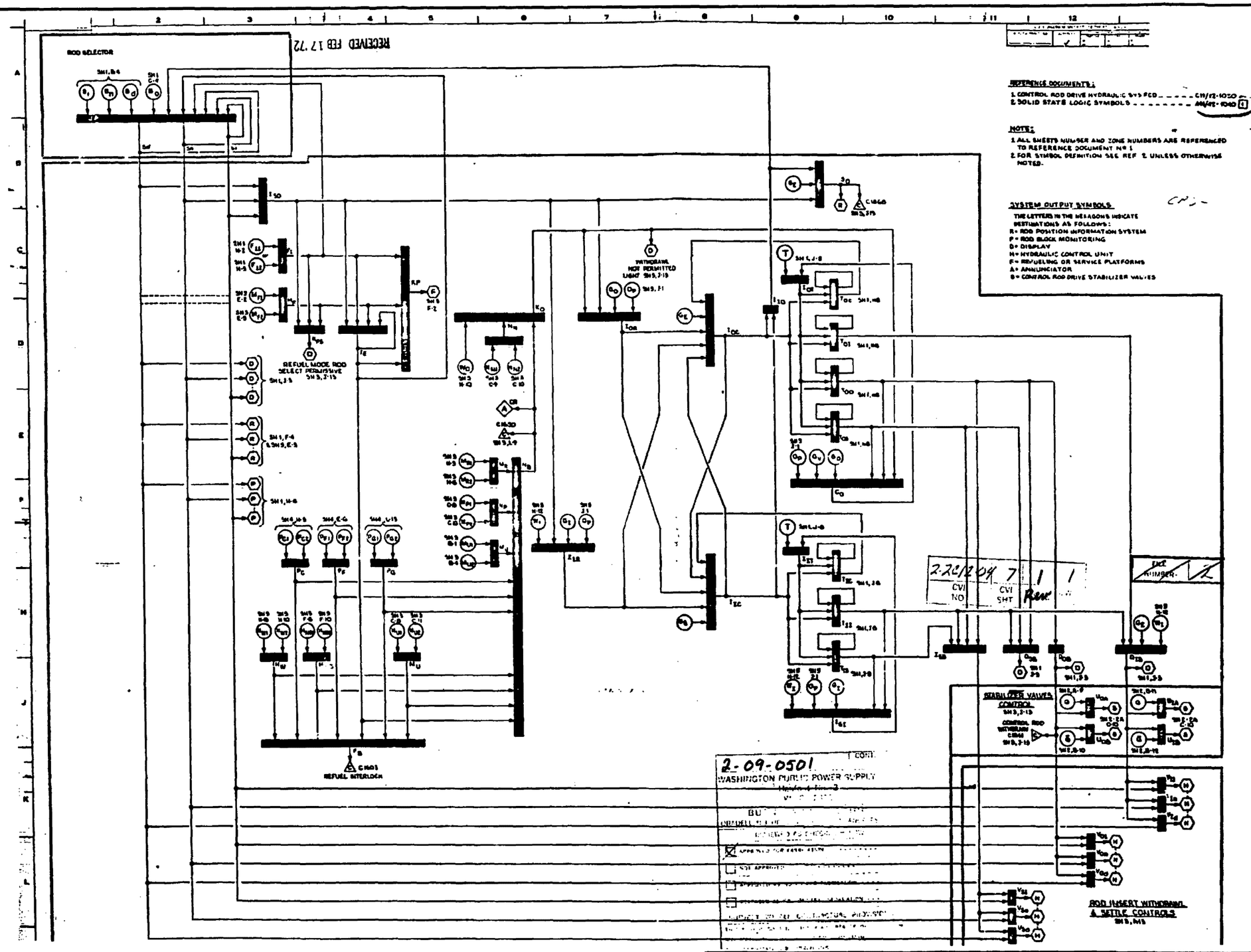

Columbia Generating Station Final Safety Analysis Report	Reactor Manual Control System		
	Draw. No. 02C12-04,7,1	Rev. 1	Figure 7.7-3.1

Form No. 960690

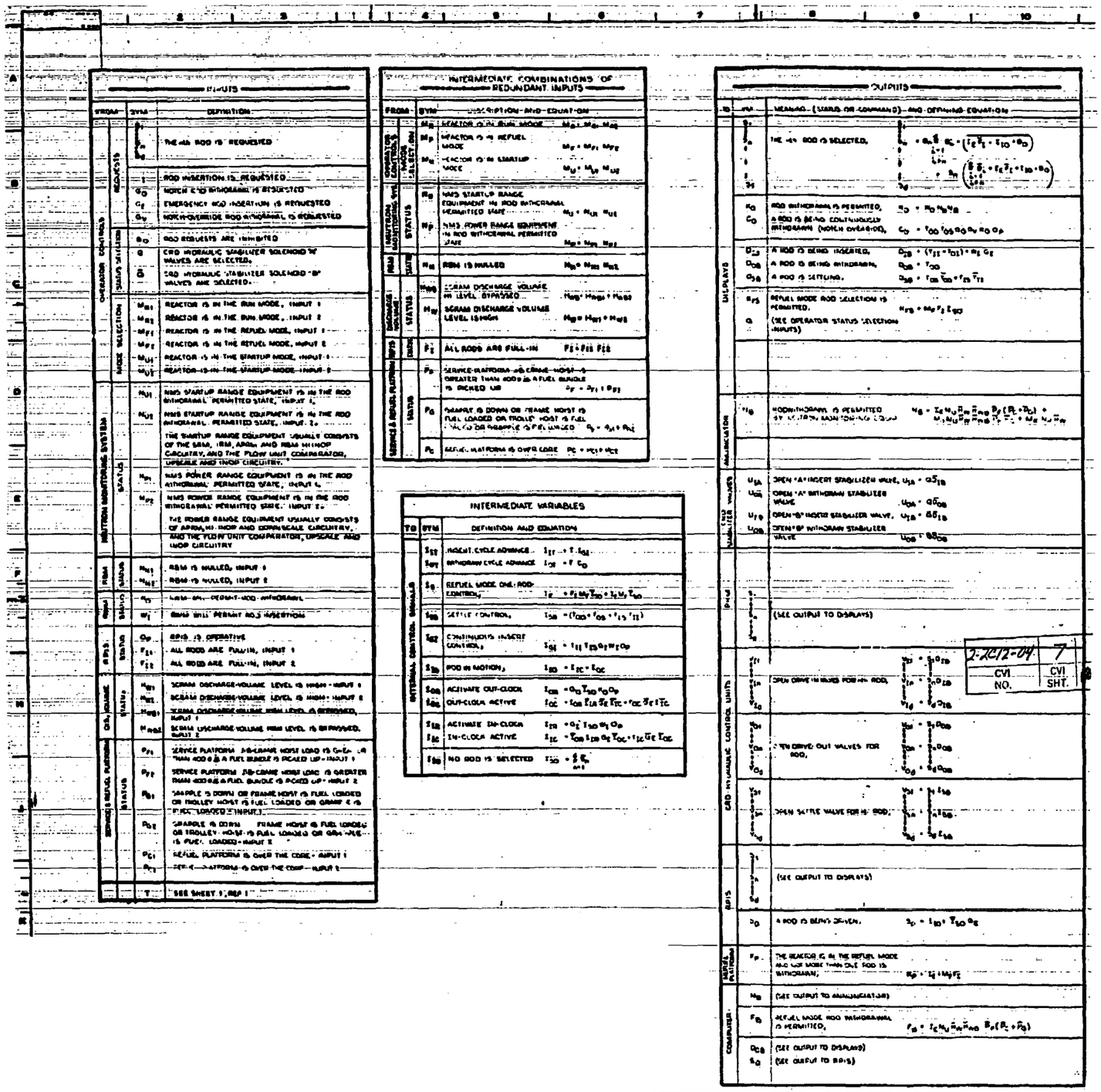

Columbia Generating Station Final Safety Analysis Report	Reactor Manual Control System		
	Draw. No. 02C12-04,7,2	Rev. 1	Figure 7.7-3.2

Form No. 960690

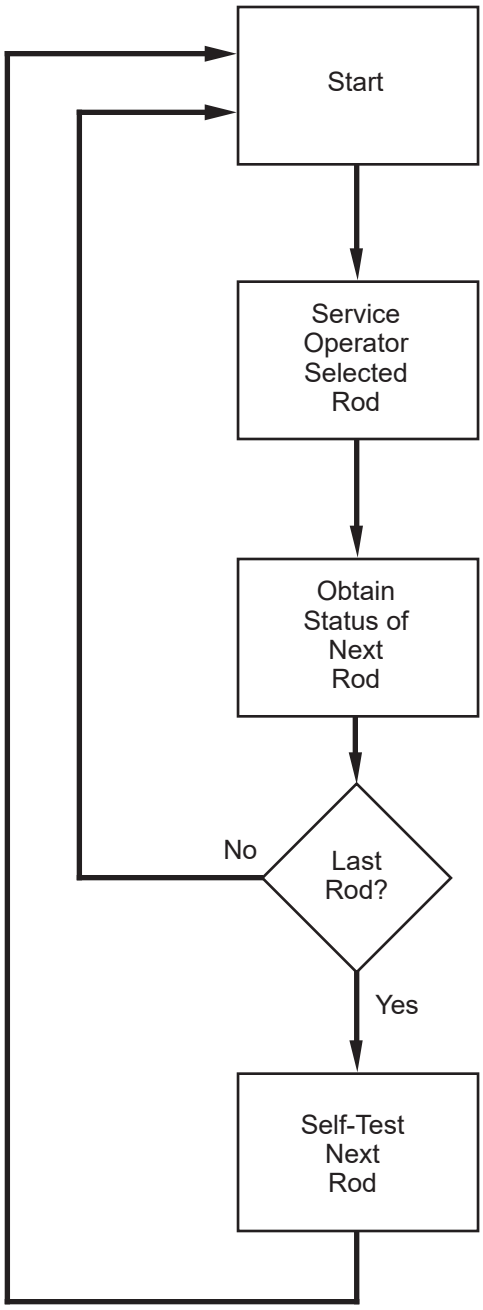

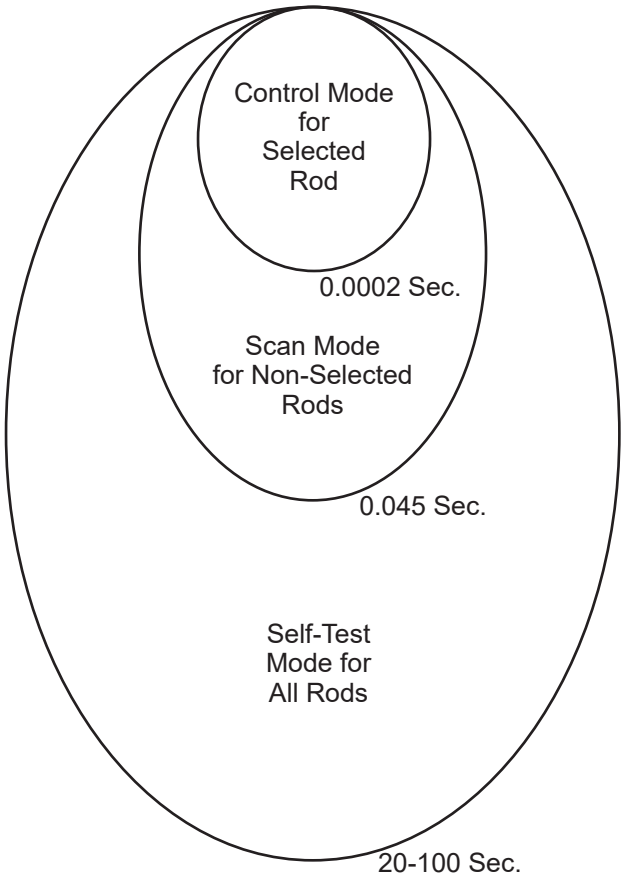

Columbia Generating Station Final Safety Analysis Report	Reactor Manual Control Operational Modes		
	Draw. No. 920843.67	Rev.	Figure 7.7-4.1

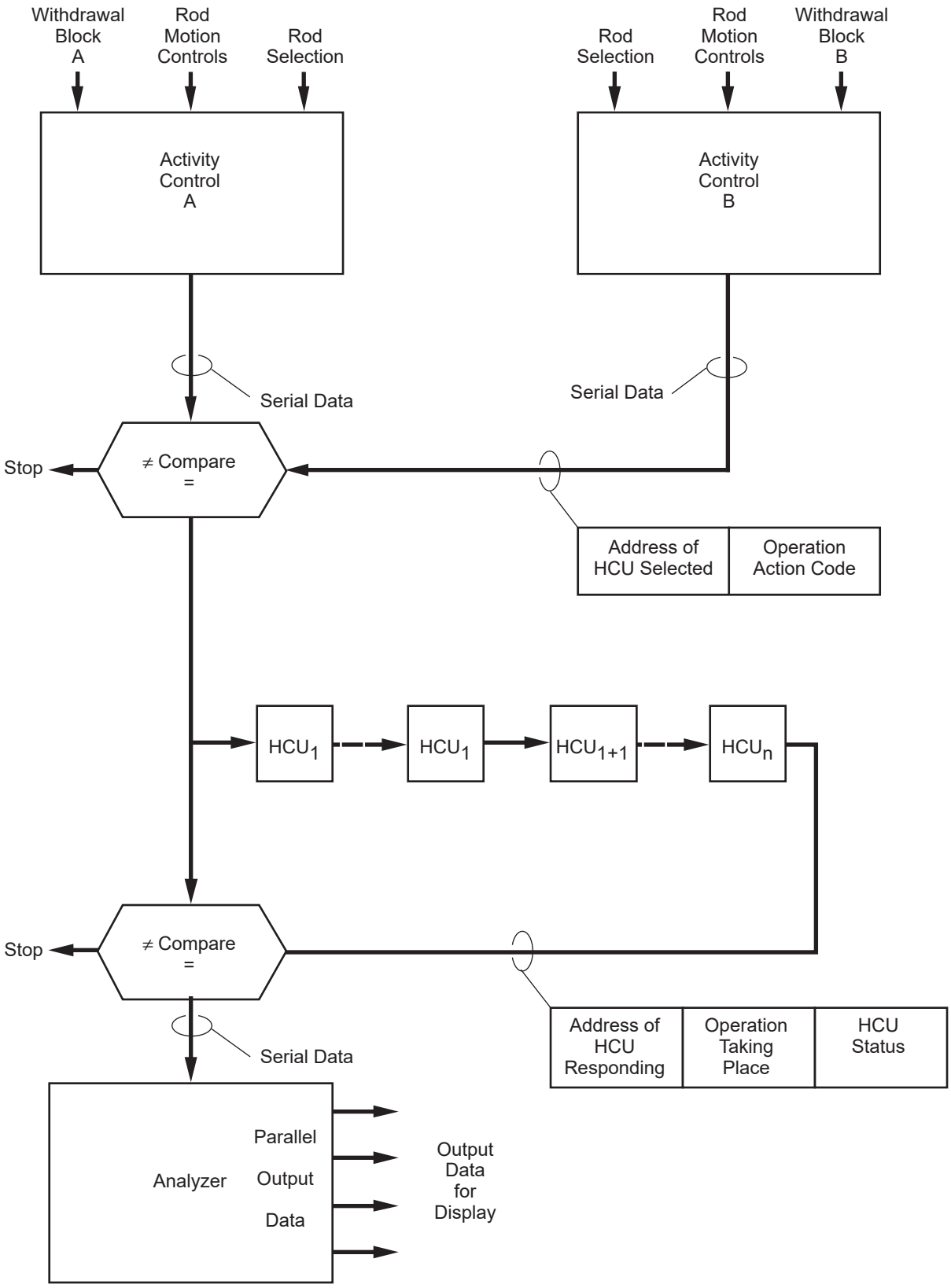

Columbia Generating Station Final Safety Analysis Report	**Reactor Manual Control System Operation**		
	Draw. No. **920843.68**	Rev.	Figure **7.7-4.2**

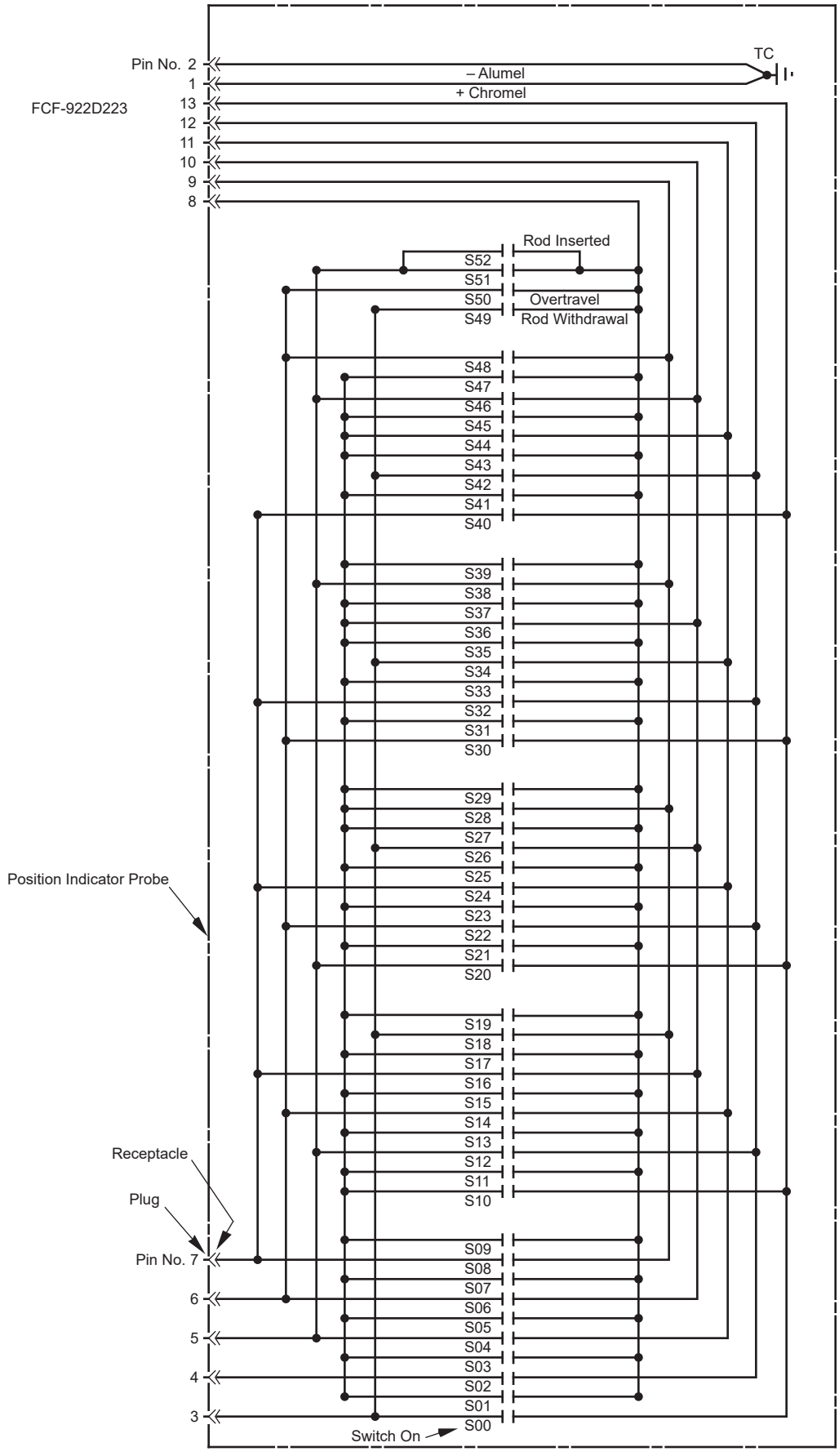

Eleven-Wire Position Probe

Columbia Generating Station
Final Safety Analysis Report

Draw. No. 920843.69	Rev.	Figure 7.7-5

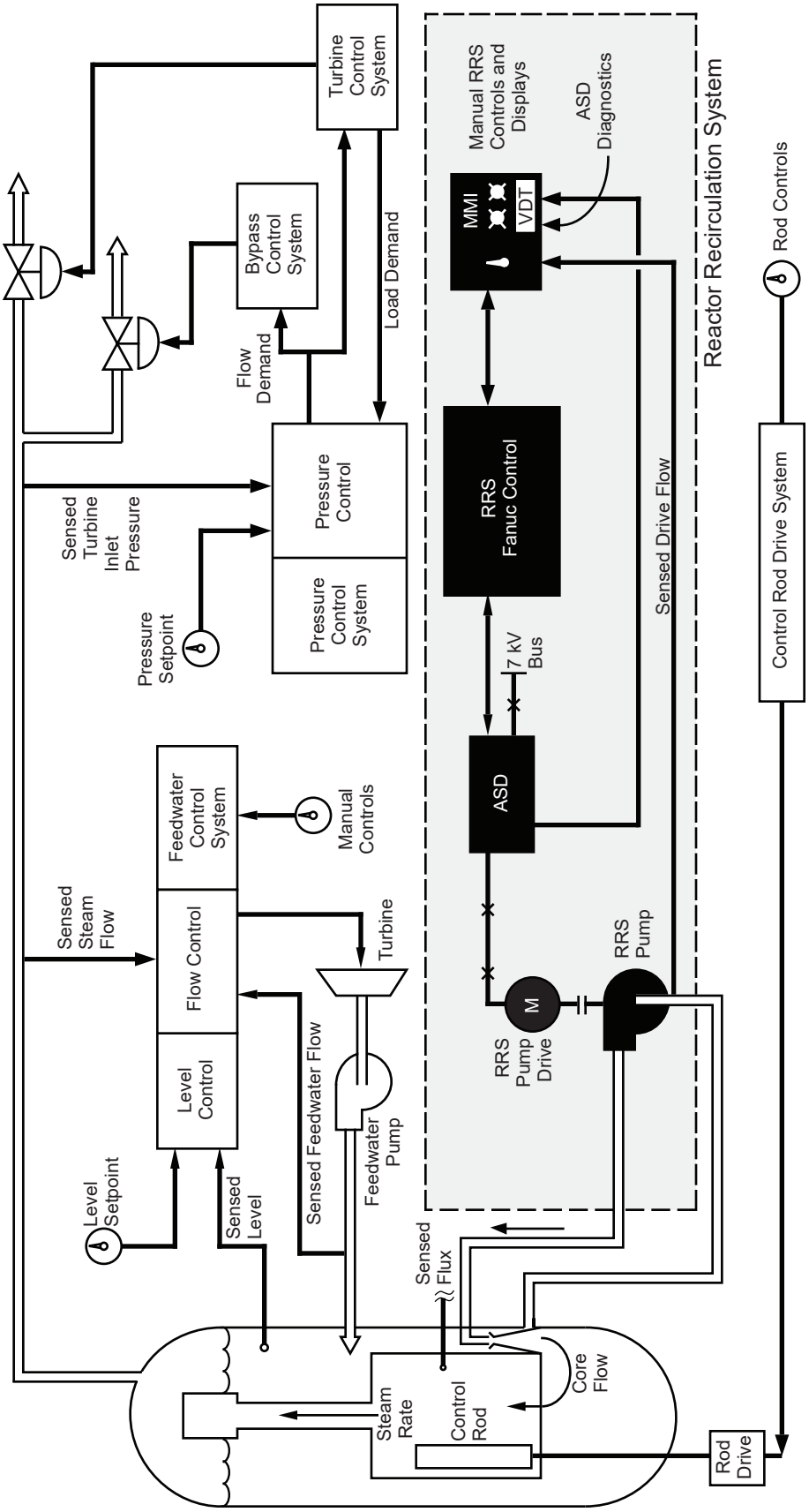

Columbia Generating Station Final Safety Analysis Report	**Simplified NSSS Control Schemes (RRS-ASD Flow Control Scheme)**		
	Draw. No. **960690.13**	Rev.	Figure **7.7-6**

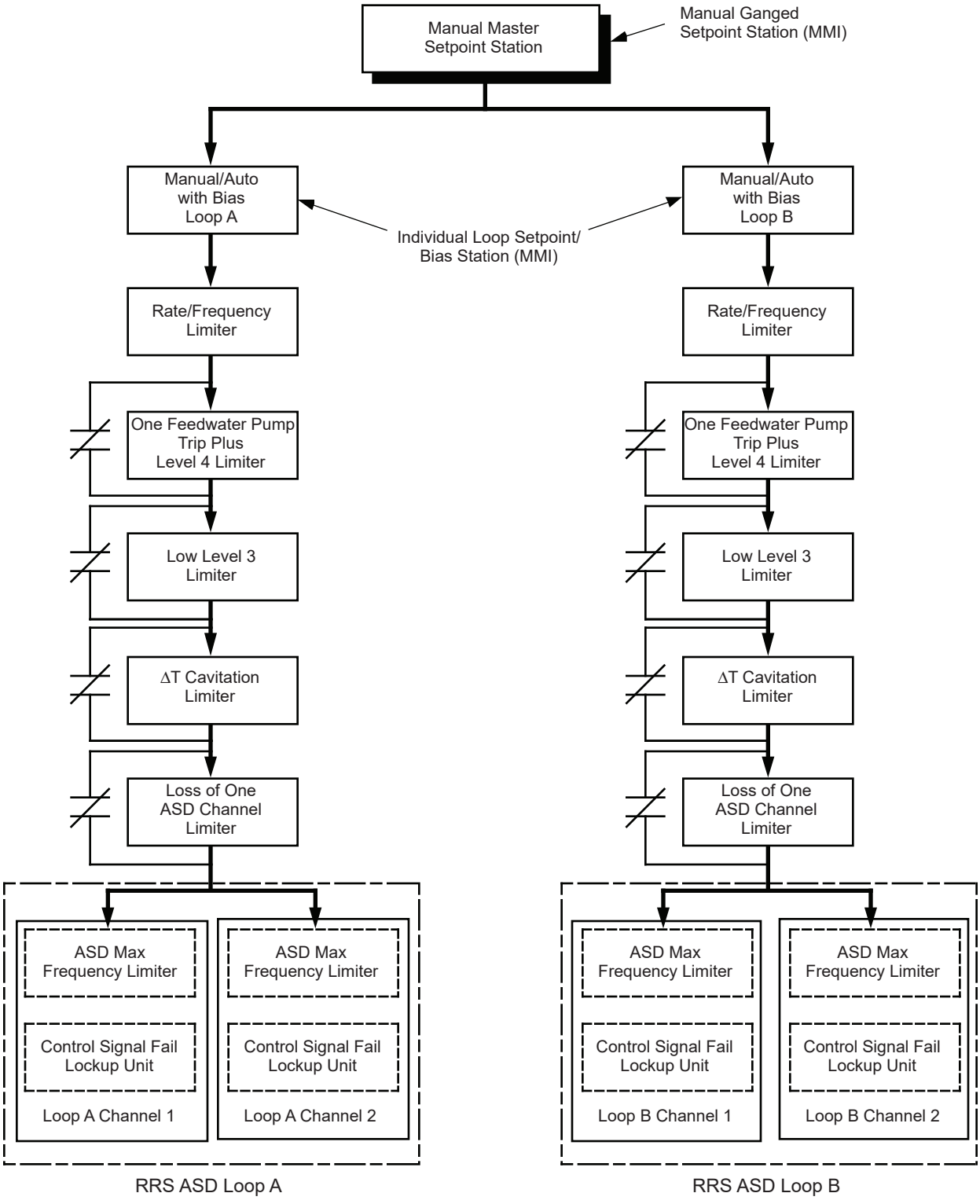

Columbia Generating Station
Final Safety Analysis Report

RFCS Simplified Control Logic Block Diagram

Draw. No. 960690.28	Rev.	Figure 7.7-7

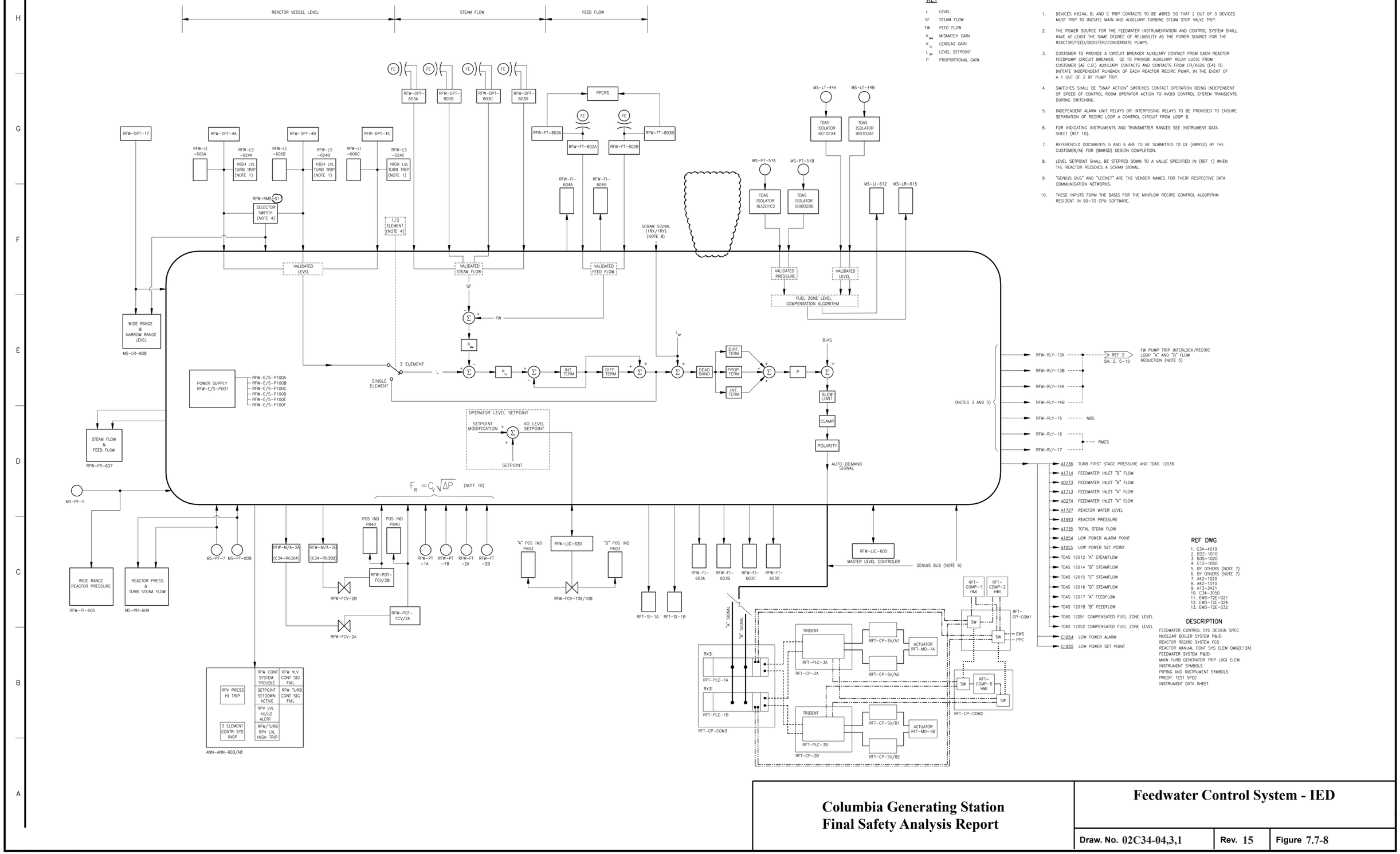

Columbia Generating Station
Final Safety Analysis Report

Feedwater Control System - IED

Draw. No. 02C34-04,3,1	Rev. 15	Figure 7.7-8

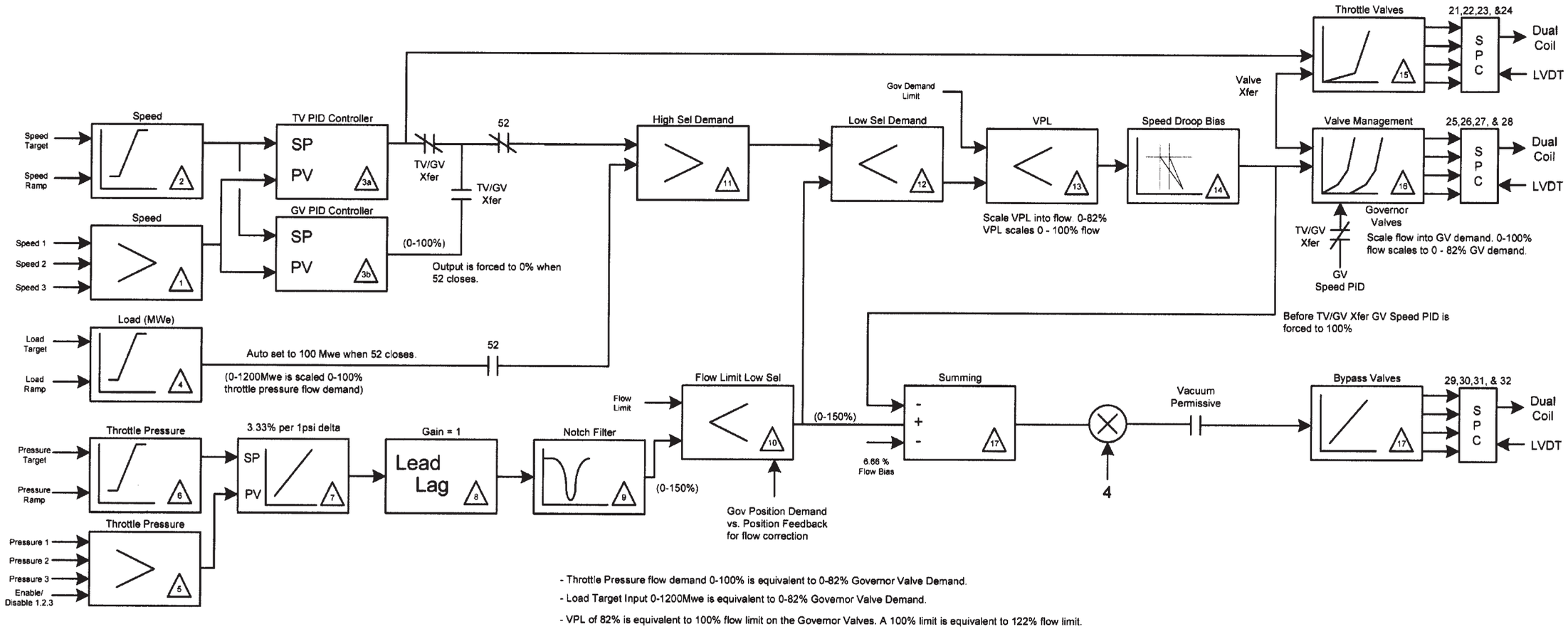

- Throttle Pressure flow demand 0-100% is equivalent to 0-82% Governor Valve Demand.
- Load Target Input 0-1200Mwe is equivalent to 0-82% Governor Valve Demand.
- VPL of 82% is equivalent to 100% flow limit on the Governor Valves. A 100% limit is equivalent to 122% flow limit.

1. Turbine Speed Input Selector
2. Speed Reference Generator
3a. TV Speed PID Controller
3b. GV Speed PID Controller
4. Load Demand (limit) Control
5. Throttle Pressure Input Selector
6. Throttle Pressure Reference Generator
7. Throttle Pressure Controller
8. Lead Lag Filter
9. Steam Line Compensator
10. Flow Limit Selector
11. Speed/Load High Select Demand
12. Controller Demand Low Select
13. Governing Valve Demand Limit Selector
14. Speed Droop Bias
15. Throttle Valve Management
16. Governing Valve Management
17. Bypass Valve Management
18. MSR Controller

Modules 21 - 32 include the TV, GV, and BV Servo Control descriptions

Modules 21-24: TV1-TV4 Servo Control
Modules 25-28: GV1-GV4 Servo Control
Modules 29-32: BV1-BV4 Servo Control
Modules 33 - Bypass Valve Solenoid Outputs
Modules 34 - OPC Solenoid Outputs
Modules 35 - Temperature Permissive for Drain Valve Auto Control
Modules 36 - Control Tricon Trip Module
Modules 37 - Common System Alarm Trouble Outputs
Modules 38 - Generator Breaker Voter
Modules 39 - Condenser Vacuum Inhibit Bypass Valve Voter
Modules 40 - Valve Position Status Module
Modules 41 - Load Demand to Trip Tricon

Columbia Generating Station
Final Safety Analysis Report

Simplified Diagram - Turbine Pressure and Speed/Load Control

Draw. No. 920843.70 | Rev. | Figure 7.7-9

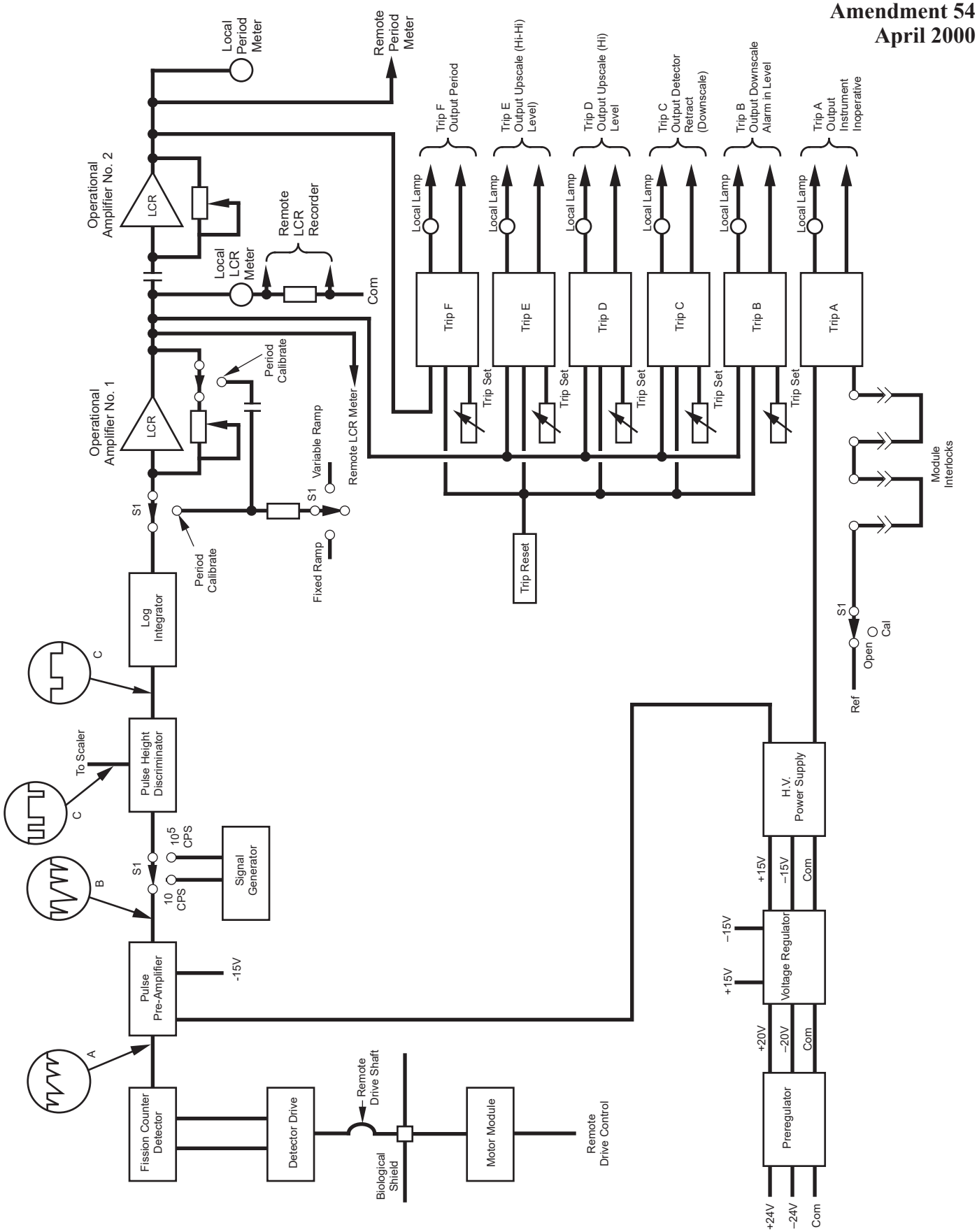

Columbia Generating Station
Final Safety Analysis Report

Functional Block Diagram - SRM Channel

Draw. No. 920843.71	Rev.	Figure 7.7-10

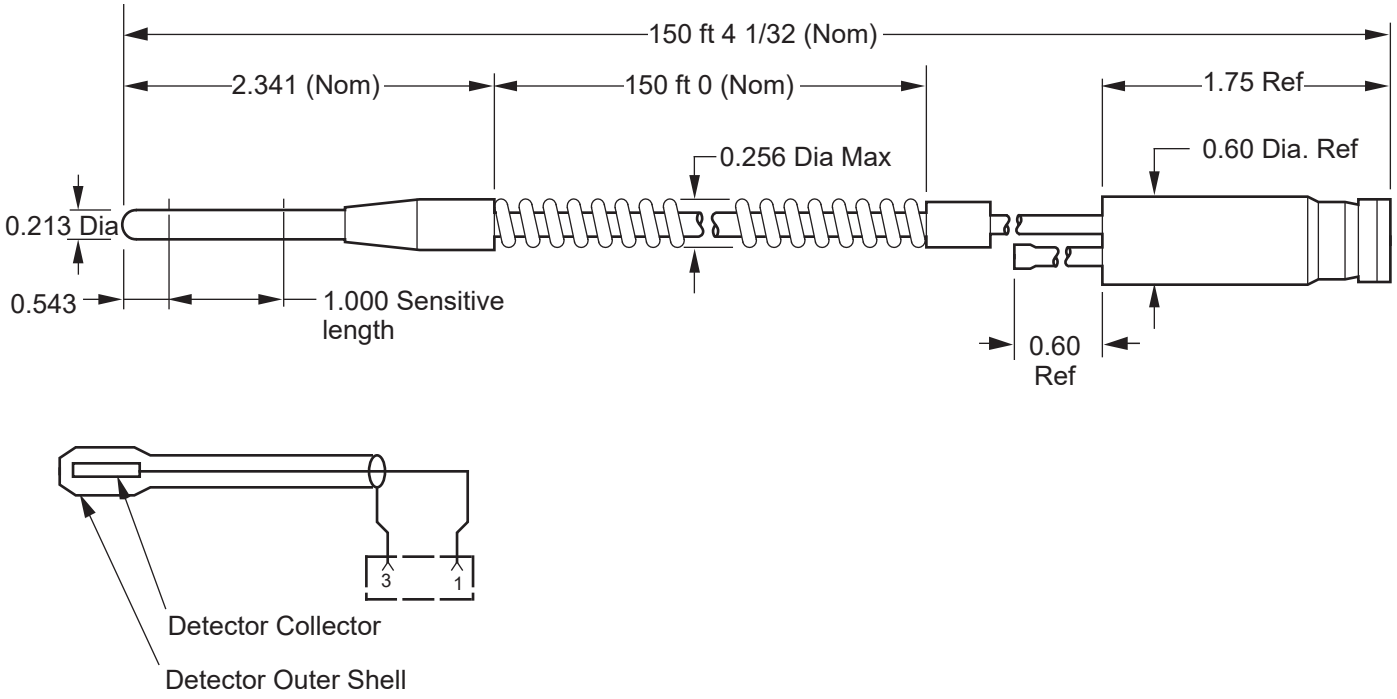

Columbia Generating Station Final Safety Analysis Report	**Traversing In-core Probe Assembly**		
	Draw. No. **920843.72**	Rev.	Figure **7.7-11**

Form No. 960690

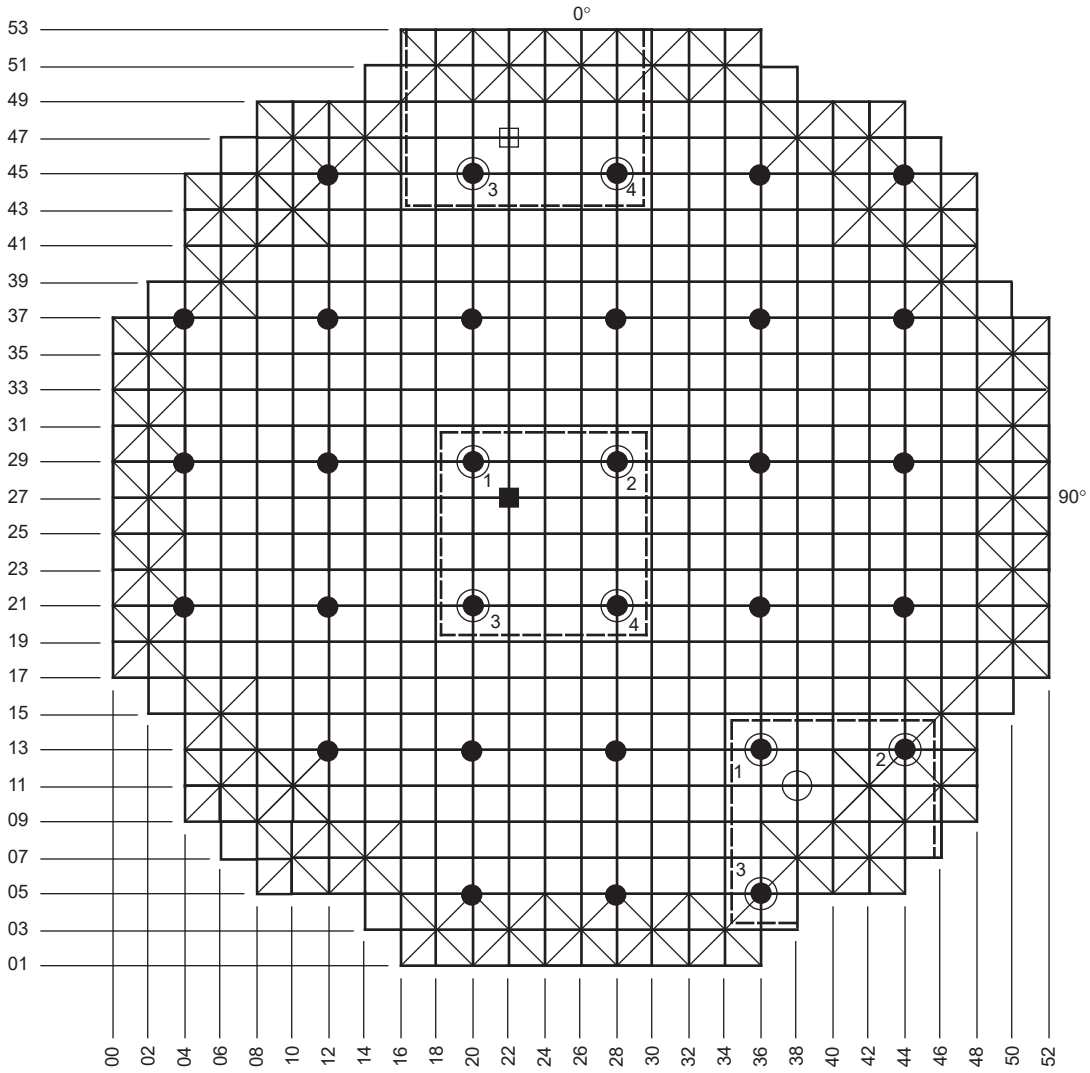

Note: Assignment is automatically initiated upon rod selection.

RPM automatically bypassed (reading zeroed)

Typical rod yielding four LPRM strings as input

Typical rod yielding three LPRM strings as input

Typical rod yielding two LPRM strings as input

Columbia Generating Station
Final Safety Analysis Report

Assignment of LPRM Input to RBM System

Draw. No. 920843.51	Rev.	Figure 7.7-12

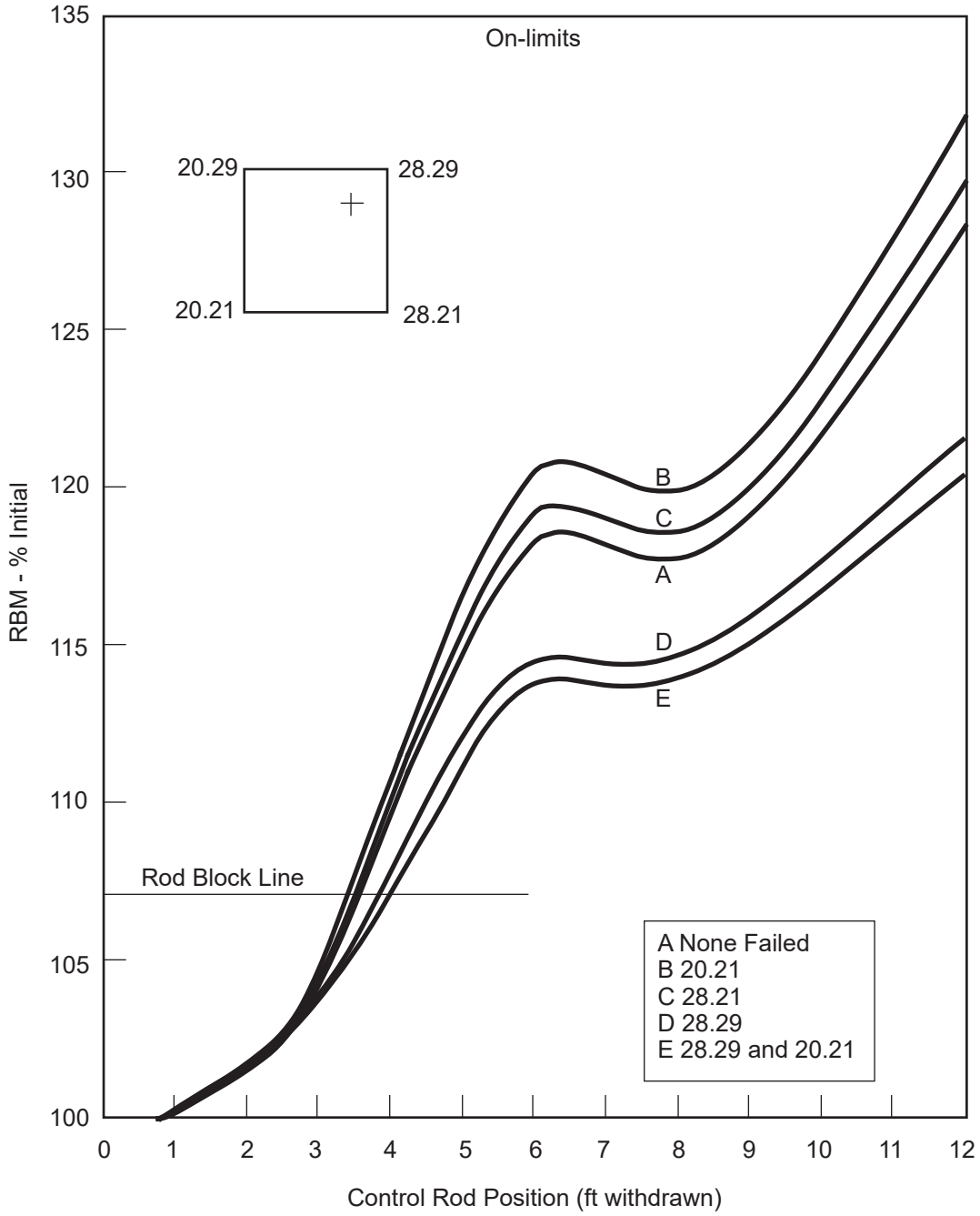

Columbia Generating Station Final Safety Analysis Report	RBM Response to Control Rod Motion (Channels A and C)		
	Draw. No. 920843.73	Rev.	Figure 7.7-13

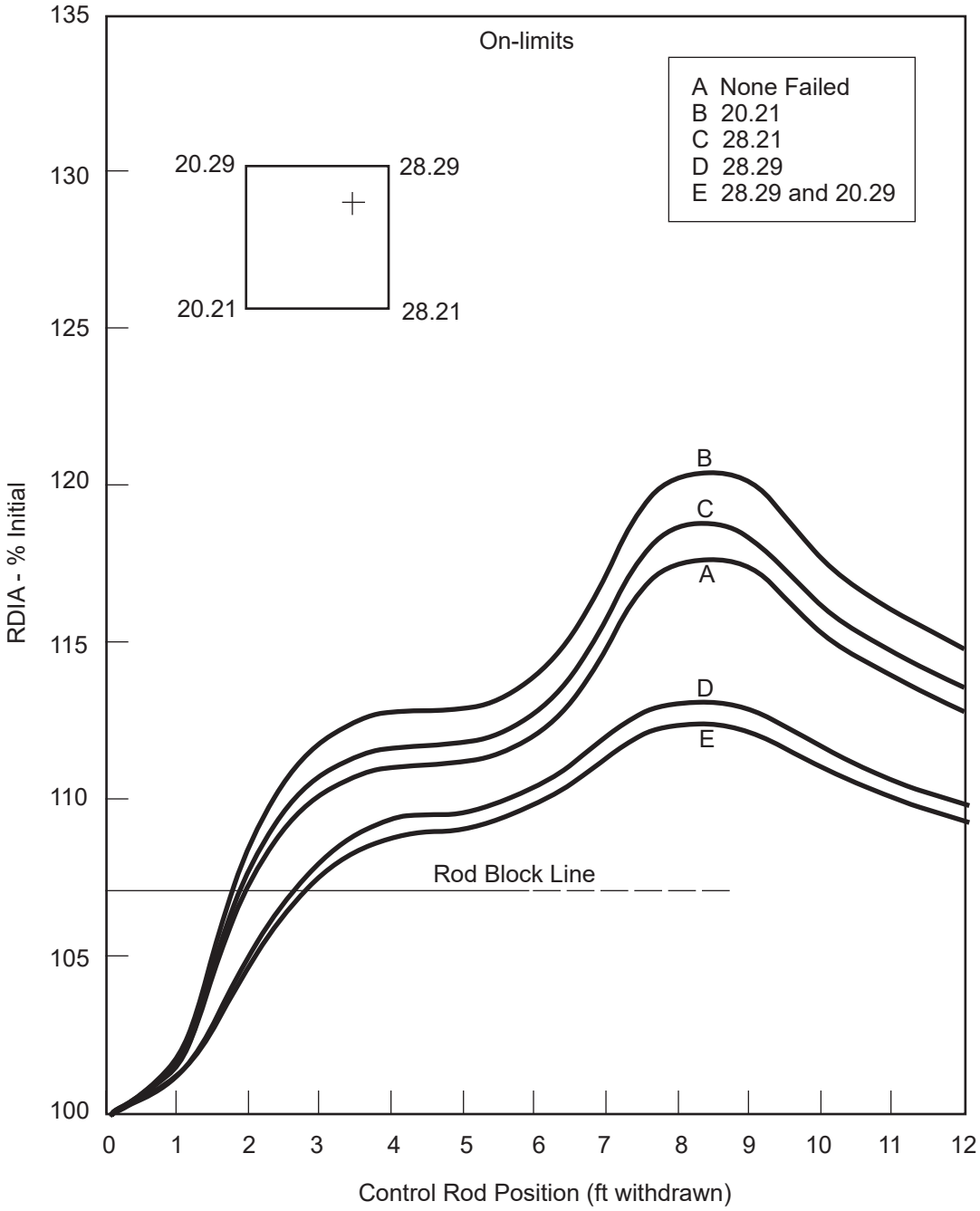

Columbia Generating Station Final Safety Analysis Report	RBM Response to Control Rod Motion (Channels B and D)		
	Draw. No. 920843.74	Rev.	Figure 7.7-14

DELETED

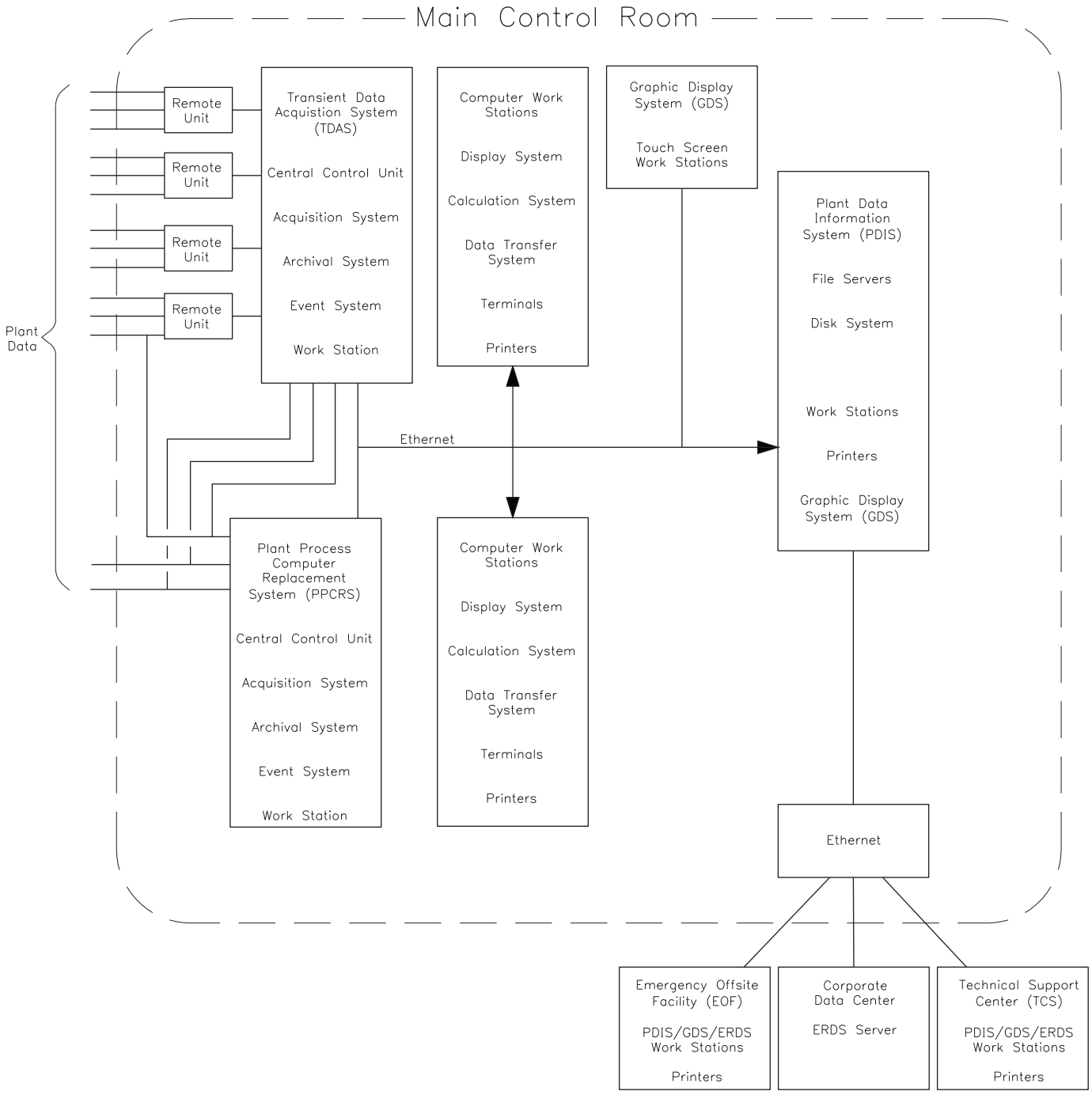

Columbia Generating Station
Final Safety Analysis Report

TDAS/PPCRS/PDIS Configuration

Draw. No. 950021.30	Rev. 2	Figure 7.7-16

Nomenclature Illustration Only
Not to Scale

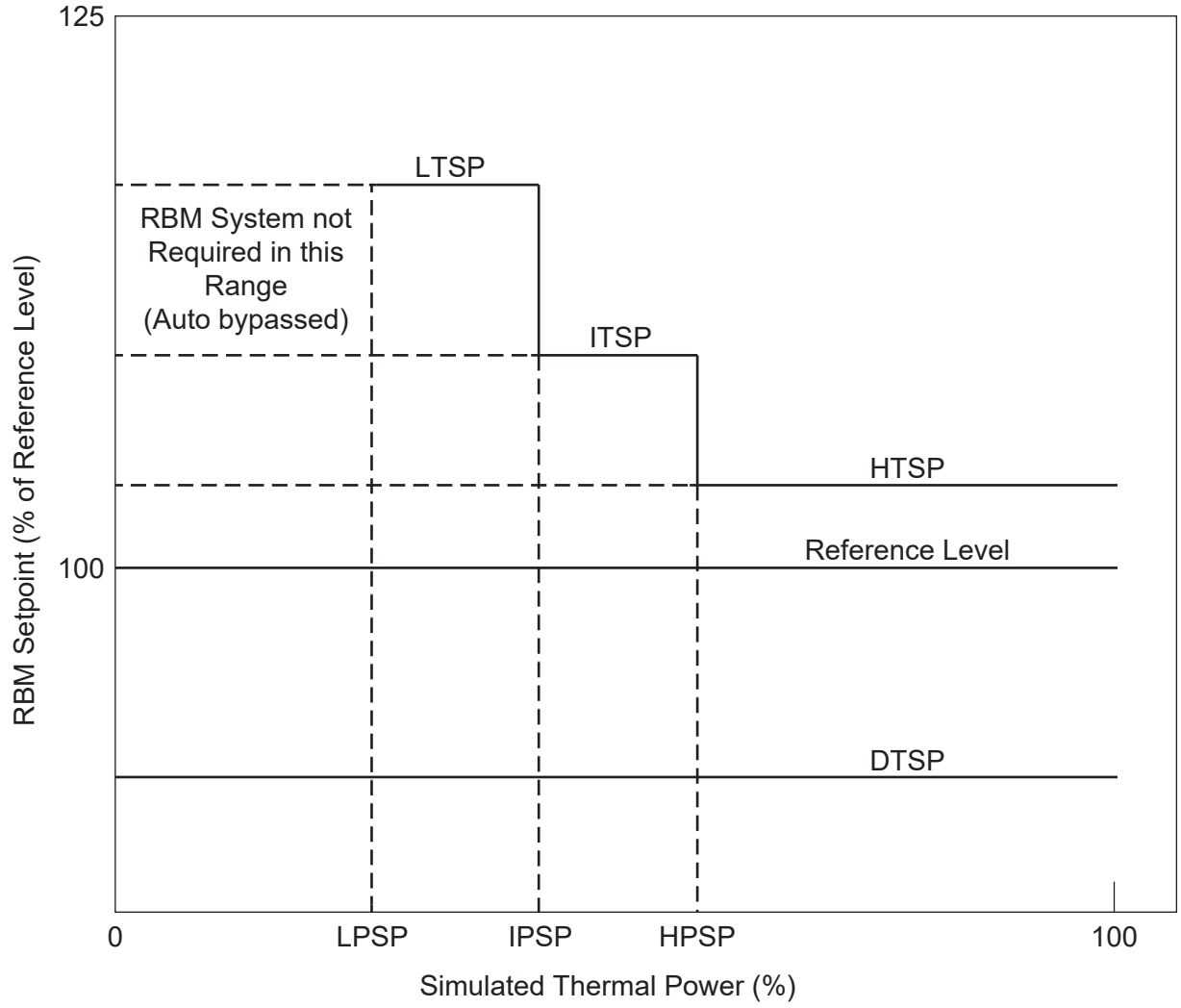

LPSP: Low Power Setpoint
IPSP: Intermediate Power Setpoint
HPSP: High Power Setpoint

LTSP: Low Trip Setpoint
ITSP: Intermediate Trip Setpoint
HTSP: High Trip Setpoint
DTSP: Downscale Trip Setpoint

Columbia Generating Station Final Safety Analysis Report	**Power Dependent RBM Trip Setpoints**		
	Draw. No. **990306.11**	Rev.	Figure **7.7-17**

Chapter 8

ELECTRIC POWER

TABLE OF CONTENTS

Section Page

8.1 INTRODUCTION 8.1-1
8.1.1 UTILITY GRID DESCRIPTION 8.1-1
8.1.2 OFFSITE ELECTRICAL POWER SYSTEM DESCRIPTION 8.1-1
8.1.3 ONSITE ELECTRICAL POWER SYSTEM DESCRIPTION 8.1-3
8.1.4 SAFETY LOADS 8.1-5
8.1.5 DESIGN BASES 8.1-5
8.1.5.1 Offsite Electrical Power System 8.1-5
8.1.5.2 Onsite Electrical Power System 8.1-7

8.2 OFFSITE POWER SYSTEM 8.2-1
8.2.1 DESCRIPTION 8.2-1
8.2.1.1 Utility Grid Arrangement 8.2-1
8.2.1.2 Offsite Power Transmission Lines 8.2-2
8.2.1.3 Main Generator and Step-Up Main Transformer Bank 8.2-3
8.2.1.4 Normal Auxiliary, Startup, and Backup Transformers and Buses 8.2-4
8.2.1.5 Power System Communications 8.2-7
8.2.2 ANALYSIS 8.2-7
8.2.2.1 Stability Analysis 8.2-7
8.2.2.2 Grid Availability Analysis 8.2-9
8.2.2.3 Generator Operating Limits 8.2-9
8.2.2.4 Criteria Conformance Analysis 8.2-9

8.3 ONSITE POWER SYSTEMS 8.3-1
8.3.1 ALTERNATING CURRENT POWER SYSTEMS 8.3-1
8.3.1.1 Description 8.3-1
8.3.1.1.1 4.16-kV and 6.9-kV Distribution System 8.3-1
8.3.1.1.2 480-Volt Distribution System 8.3-6
8.3.1.1.3 120/240-Volt (Non-Class 1E) Plant Uninterruptible Power System 8.3-7
8.3.1.1.4 120/208-Volt Non-Class 1E Instrumentation Power System 8.3-7
8.3.1.1.5 Divisions 1 and 2 120/240-Volt Critical (Class 1E) Instrumentation Power System 8.3-8
8.3.1.1.6 Reactor Protection System Power System 8.3-8
8.3.1.1.7 Standby Alternating Current Power System 8.3-10
8.3.1.1.7.1 Redundant (Division 1 and Division 2) Standby Alternating Current Power Supplies 8.3-10
8.3.1.1.7.1.1 General 8.3-10

Chapter 8

ELECTRIC POWER

TABLE OF CONTENTS (Continued)

Section — Page

8.3.1.1.7.1.2 Unit Ratings and Capability 8.3-11
8.3.1.1.7.1.3 Cooling Water Systems 8.3-12
8.3.1.1.7.1.4 Lubrication Systems 8.3-12
8.3.1.1.7.1.5 Air Starting Systems 8.3-12
8.3.1.1.7.1.6 Fuel Oil Systems 8.3-12
8.3.1.1.7.1.7 Automatic Starting and Loading Systems 8.3-12
8.3.1.1.7.1.8 Protective Trips 8.3-14
8.3.1.1.7.1.9 Surveillance 8.3-15
8.3.1.1.7.1.10 Instrumentation and Control Systems 8.3-16
8.3.1.1.7.1.11 Light or No Load Operation 8.3-17
8.3.1.1.7.2 High-Pressure Core Spray (Division 3) Standby Alternating Current Power Supply 8.3-17
8.3.1.1.7.2.1 General 8.3-17
8.3.1.1.7.2.2 Unit Rating and Capability 8.3-18
8.3.1.1.7.2.3 Cooling Water System 8.3-19
8.3.1.1.7.2.4 Lubrication System 8.3-19
8.3.1.1.7.2.5 Air Starting System 8.3-20
8.3.1.1.7.2.6 Fuel Oil System 8.3-20
8.3.1.1.7.2.7 Automatic Starting and Loading System 8.3-20
8.3.1.1.7.2.8 Protective Trips 8.3-21
8.3.1.1.7.2.9 Surveillance 8.3-22
8.3.1.1.7.2.10 Instrumentation and Control System 8.3-24
8.3.1.1.7.2.11 Light Load Operation 8.3-24
8.3.1.1.8 Electrical Equipment Tests 8.3-24
8.3.1.1.9 Equipment Criteria 8.3-25
8.3.1.1.9.1 Motor Size 8.3-25
8.3.1.1.9.2 Motor Thermal Overloads 8.3-26
8.3.1.1.9.3 Minimum Voltage 8.3-26
8.3.1.1.9.4 Motor Starting Torque 8.3-26
8.3.1.1.9.5 Minimum Torque 8.3-26
8.3.1.1.9.6 Motor Insulation 8.3-27
8.3.1.1.9.7 Temperature Monitoring Devices 8.3-27
8.3.1.1.9.8 Interrupting Capacity 8.3-27
8.3.1.1.9.9 Electric Circuit Protection 8.3-28
8.3.1.1.9.10 4.16-kV Motor Feeder 8.3-28
8.3.1.1.9.11 Transformer Feeders 8.3-29

Chapter 8

ELECTRIC POWER

TABLE OF CONTENTS (Continued)

Section — Page

8.3.1.1.9.12 Diesel Generator 8.3-29
8.3.1.1.9.13 480-Volt Motor Feeder Fed From Switchgear Bus 8.3-29
8.3.1.1.9.14 Motor Control Center Feeder Fed From 480-V Switchgear Bus 8.3-29
8.3.1.1.9.15 Feeders From 480-Volt Motor Control Centers 8.3-29
8.3.1.1.9.16 Electrical Penetration Assemblies in Containment Structures 8.3-29
8.3.1.1.9.17 Raceway Systems 8.3-30
8.3.1.1.9.18 Grounding Requirements 8.3-30
8.3.1.1.9.19 Vital Inverter Instrumentation Power System Protection Requirements 8.3-31
8.3.1.1.10 Class 1E Electrical Equipment Arrangement 8.3-31
8.3.1.2 Analysis 8.3-32
8.3.1.2.1 Compliance to Criteria 8.3-32
8.3.1.2.1.1 General 8.3-32
8.3.1.2.1.2 Reactor Protection System Power System 8.3-34
8.3.1.2.1.3 Redundant (Division 1 and Division 2) Standby Alternating Current Power Supplies 8.3-34
8.3.1.2.1.4 High-Pressure Core Spray (Division 3) Standby Alternating Current Power Supply 8.3-35
8.3.1.2.2 Tests and Inspection 8.3-41
8.3.1.2.3 Service Environment 8.3-43
8.3.1.2.4 Offsite Power System Degradation 8.3-44
8.3.1.2.4.1 General 8.3-44
8.3.1.2.4.2 Class 1E Auxiliary Alternating Current Distribution System Voltages 8.3-44
8.3.1.2.4.2.1 Voltage Criteria 8.3-44
8.3.1.2.4.2.2 Expected Voltages - 25-kV Main Generating Unit Supply 8.3-44
8.3.1.2.4.2.3 Expected Voltages - 230-kV Grid Supply 8.3-45
8.3.1.2.4.2.4 Expected Voltages - 115-kV Grid Supply 8.3-45
8.3.1.2.4.3 Class 1E Auxiliary Alternating Current Distribution System Voltage Sensing 8.3-45
8.3.1.2.4.3.1 Primary Undervoltage Sensing 8.3-45
8.3.1.2.4.3.2 Secondary Undervoltage Sensing 8.3-45
8.3.1.3 Physical Identification of Safety-Related (Class 1E) Equipment 8.3-47
8.3.1.3.1 Class 1E Raceways, Cables, Equipment (Panels and Racks), and Enclosures 8.3-48
8.3.1.3.2 Prime and Associated by Proximity Circuit Raceways, Cables, Equipment, and Enclosures 8.3-48

Chapter 8

ELECTRIC POWER

TABLE OF CONTENTS (Continued)

Section — Page

8.3.1.3.3 Non-Class 1E Raceways, Cables, Equipment, and Enclosures 8.3-48
8.3.1.4 Independence of Redundant Systems 8.3-48
8.3.1.4.1 Definitions 8.3-49
8.3.1.4.2 General Separation Criteria 8.3-49
8.3.1.4.2.1 Cable Separation 8.3-49
8.3.1.4.2.2 Cable Routing 8.3-51
8.3.1.4.2.3 Physical Separation Criteria 8.3-52
8.3.1.4.2.4 Administrative Controls for Ensuring Separation Criteria 8.3-53
8.3.1.4.2.5 Separation For Fail-Safe Systems 8.3-53
8.3.1.4.2.6 Equipment and Circuits Requiring Separation 8.3-53
8.3.1.4.2.7 Compliance to Regulatory Guide 1.75, Revision 1 ..... 8.3-53
8.3.1.4.3 Physical and Spatial Separation Details 8.3-55
8.3.1.4.3.1 Standby Generating Units and Auxiliaries 8.3-55
8.3.1.4.3.2 Direct Current Power Systems 8.3-55
8.3.1.4.3.3 Switchgear 8.3-55
8.3.1.4.3.4 Motor Control Centers and Distribution Panels 8.3-55
8.3.1.4.3.5 Containment Electrical Penetrations 8.3-56
8.3.1.4.3.6 Power Generation Control Complex 8.3-56
8.3.1.4.3.6.1 Termination Cabinets 8.3-56
8.3.1.4.3.6.2 Modular Floor Sections 8.3-56
8.3.1.4.3.6.3 Power Generation Control Complex Cable Assembly and Routing 8.3-57
8.3.1.4.3.7 Separation Within Enclosures and Equipment 8.3-57
8.3.1.4.3.8 Spatial Separation Between Raceways 8.3-59
8.3.1.4.3.9 Spatial Separation of 120/140VAC Critical (Class 1E) Instrument Power System 8.3-59
8.3.1.4.4 Associated Circuit Analysis 8.3-59
8.3.1.4.4.1 Categories of Associated Circuits Treated as Non-Class 1E 8.3-59
8.3.1.4.4.1.1 Analysis for Category 1A Non-Class 1E Circuits 8.3-60
8.3.1.4.4.1.2 Analysis for Category 1B Non-Class 1E Circuits 8.3-61
8.3.1.4.4.1.3 Analysis for Category 1C Non-Class 1E Circuits 8.3-61
8.3.1.4.4.1.4 Analysis for Category 2A Non-Class 1E Circuits 8.3-61
8.3.1.4.4.1.5 Analysis for Category 2B Non-Class 1E Circuits 8.3-63
8.3.1.4.4.1.6 Analysis for Category 3A Non-Class 1E Circuits 8.3-63
8.3.1.4.4.1.7 Analysis for Category 3B Non-Class 1E Circuits 8.3-63
8.3.1.4.4.1.8 Analysis for Category 3C Non-Class 1E Circuits 8.3-64
8.3.1.4.4.2 Categories of Associated Circuits Treated as Class 1E 8.3-65

Chapter 8

ELECTRIC POWER

TABLE OF CONTENTS (Continued)

Section — Page

8.3.1.4.4.3 Specific Deviations to Separation Criteria - Reactor Protection System Power Supply. 8.3-65
8.3.2 DIRECT CURRENT POWER SYSTEMS 8.3-66
8.3.2.1 Description 8.3-66
8.3.2.1.1 125-Volt Direct Current Division 1 and 2 Systems 8.3-67
8.3.2.1.1.1 General 8.3-67
8.3.2.1.1.2 Batteries 8.3-67
8.3.2.1.1.3 Chargers 8.3-68
8.3.2.1.2 High-Pressure Core Spray (Division 3) 125-Volt Direct Current System 8.3-68
8.3.2.1.2.1 General 8.3-68
8.3.2.1.2.2 Battery and Charger 8.3-69
8.3.2.1.2.3 Battery Capacity 8.3-69
8.3.2.1.2.4 Charger 8.3-69
8.3.2.1.3 ±24-Volt Direct Current (Division 1 and 2) Systems 8.3-69
8.3.2.1.3.1 General 8.3-69
8.3.2.1.3.2 Batteries 8.3-70
8.3.2.1.3.3 Chargers 8.3-70
8.3.2.1.4 250-Volt Direct Current (Division 1) System 8.3-70
8.3.2.1.4.1 General 8.3-70
8.3.2.1.4.2 Battery 8.3-70
8.3.2.1.4.3 Charger 8.3-71
8.3.2.1.5 Non-Class 1E Direct Current Systems 8.3-71
8.3.2.1.5.1 Main Plant 125-Volt Direct Current (Non-Class 1E) System. 8.3-71
8.3.2.1.5.1.1 General 8.3-71
8.3.2.1.5.1.1.1 Battery (B1-7) 8.3-71
8.3.2.1.5.1.1.2 Charger (C1-7) 8.3-71
8.3.2.1.5.2 Makeup Pump House 125-Volt Direct Current (Non-Class 1E) System 8.3-71
8.3.2.1.5.2.1 General 8.3-71
8.3.2.1.5.2.2 Batteries (B1-3 and B1-4) 8.3-72
8.3.2.1.5.2.3 Chargers (C1-3 and C1-4) 8.3-72
8.3.2.1.5.3 405-Volt Direct Current (Non-Class 1E) System 8.3-72
8.3.2.1.5.3.1 General 8.3-72
8.3.2.1.5.3.2 Battery (B1-6) 8.3-72
8.3.2.1.5.3.3 Charger 8.3-72
8.3.2.1.6 Ventilation 8.3-72
8.3.2.1.7 Testing and Maintenance 8.3-72
8.3.2.1.7.1 Periodic Maintenance Testing 8.3-72

Chapter 8

ELECTRIC POWER

TABLE OF CONTENTS (Continued)

Section — Page

8.3.2.1.7.2 Exceptions to Institute of Electrical and Electronics Engineers Standards 8.3-73
8.3.2.1.7.3 Exceptions to the Requirements Listed in IEEE 450-2002 ..... 8.3-74
8.3.2.2 Analysis 8.3-74
8.3.2.2.1 Compliance to Criteria 8.3-74
8.3.2.2.1.1 General 8.3-74
8.3.2.2.1.2 Divisions 1 and 2 125-Volt, ±24-Volt, and 250-Volt Direct Current Systems 8.3-75
8.3.2.2.1.3 High-Pressure Core Spray (Division 3) 125-Volt Direct Current System 8.3-76
8.3.2.2.1.4 Non-Class 1E Direct Current Systems 8.3-77
8.3.2.2.2 Service Environment 8.3-77
8.3.2.3 Physical Identification of Safety-Related (Class 1E) Equipment 8.3-77
8.3.2.4 Independence of Electrical Divisions 8.3-77
8.3.3 FIRE PROTECTION FOR CABLE SYSTEMS 8.3-78
8.3.3.1 Resistance of Cables to Combustion 8.3-78
8.3.3.2 Localization of Fires 8.3-78
8.3.3.3 Detection and Protection Systems 8.3-78
8.3.4 REFERENCES 8.3-78

Chapter 8

ELECTRIC POWER

LIST OF TABLES

Number	Title	Page
8.1-1	Engineered Safety Feature Systems	8.1-13
8.2-1	Main Generator Data	8.2-11
8.3-1	*Division 1 Diesel Generator Loading - Automatic Loading of Engineered Safety Systems Bus*	*8.3-79**
8.3-2	*Division 2 Diesel Generator Loading - Automatic Loading of Engineered Safety Systems Bus*	*8.3-81**
8.3-3	*Division 3 Diesel Generator Loading - Automatic Loading of Engineered Safety Systems Bus*	*8.3-83**
8.3-4	Motor and Motor Starter Voltage Requirements	8.3-84
8.3-5	Divisions 1 and 2 Standby Diesel Generator Annunciators	8.3-85
8.3-6	Comparison of High-Pressure Core Spray Diesel Generators	8.3-87
8.3-7	Class 1E Auxiliary Alternating Current Distribution System - Acceptable Voltage Range	8.3-88
8.3-8	System Bus Voltage Monitoring Alarms	8.3-89
8.3-9	Plant Switchgear and Motor Control Center Direct Current Control Power Summary	8.3-90
8.3-10	*Battery Design Duty Cycles (Amperes vs. Time)*	*8.3-92**
8.3-11	*Division 1 125-Volt Direct Current Battery Design Duty Cycle*	*8.3-93**
8.3-12	*Division 2 125-Volt Direct Current Battery Design Duty Cycle*	*8.3-94**

**The italicized information is historical and was provided to support the application for an operating license. It is no longer updated in the FSAR.*

Chapter 8

ELECTRIC POWER

LIST OF TABLES

Number	Title	Page
8.3-13	*Division 3 (HPCS) 125-Volt Direct Current Battery Design Duty Cycle HPCS-B1-DG3*	*8.3-95**
8.3-14	*Division 1 250-Volt Direct Current Battery Design Duty Cycle*	*8.3-96**

**The italicized information is historical and was provided to support the application for an operating license. It is no longer updated in the FSAR.*

Chapter 8

ELECTRIC POWER

LIST OF FIGURES

Number	Title
8.1-1	500-kV Line Ties
8.1-2.1	Main One-Line Diagram - Main Buses
8.1-2.2	Main One-Line Diagram - Emergency Buses
8.1-2.3	Main One-Line Diagram - Miscellaneous Buses
8.1-2.4	Main One-Line Diagram - RRC ASD Buses
8.1-3	230-kV Line Ties
8.1-4	115-kV Line Ties
8.1-5	230-kV and 115-kV Auxiliary Power Layout
8.1-6	Electrical Symbol List (Sheets 1 and 2)
8.2-1	1998 Light Summer OCSG Case (Sheets 1 and 2)
8.2-2	1998 Light Winter WSCC Case (Sheets 1 and 2)
8.2-3	Stability Analysis Swing Case 98Lsas002 (Sheets 1 through 4)
8.2-4	Stability Analysis Swing Case 98Lsas019 (Sheets 1 through 4)
8.2-5	Stability Analysis Swing Case 98Lsas005a (Sheets 1 through 4)
8.2-6	Stability Analysis Swing Case 98Lwas028 (Sheets 1 through 4)
8.2-7	Stability Analysis Swing Case 98Lwas020 (Sheets 1 through 4)
8.3-1	Emergency Bus SM-7 Undervoltage Protection, Bus Transfer and Load Sequencing

Chapter 8

ELECTRIC POWER

LIST OF FIGURES (Continued)

Number	Title
8.3-2	Emergency Bus SM-8 Undervoltage Protection, Bus Transfer and Load Sequencing
8.3-3	DELETED
8.3-4	Auxiliary One-Line Diagram (MCCs) (Sheets 1 through 6)
8.3-5.1	Vital One-Line Diagram
8.3-5.2	Reactor Protection System One Line Diagram
8.3-6	Diesel Generator Building Cable Tray and Conduit Plan - El. 441 ft 0 in.
8.3-7	Diesel Generator Logic Diagram - Division 1, Engine Start
8.3-8	Diesel Generator Logic Diagram - Division 1, Generator Breaker Close
8.3-9	Diesel Generator Logic Diagram - Division 2, Engine Start
8.3-10	Diesel Generator Logic Diagram - Division 2, Generator Breaker Close
8.3-11	DG1 Excitation System
8.3-12	DG1 Engine Start/Stop Controls
8.3-13	DG1 Air Start System Control
8.3-14	DG1 Governor Speed Control
8.3-15	DG1 Unit Protection Circuits
8.3-16	DG1 Engine Alarms (Sheets 1 and 2)
8.3-17	DG2 Excitation System
8.3-18	DG2 Engine Start/Stop Controls
8.3-19	DG2 Air Start System Control

Chapter 8

ELECTRIC POWER

LIST OF FIGURES (Continued)

Number	Title
8.3-20	DG2 Governor Speed Control
8.3-21	DG2 Unit Protection Circuits
8.3-22	DG2 Engine Alarms (Sheets 1 and 2)
8.3-23	Diesel Generator Logic Diagram - Division 3 (HPCS), Engine Start
8.3-24	Diesel Generator Logic Diagram - Division 3 (HPCS), Generator Breaker Close
8.3-25	Cable Tray Plans - Reactor Building El. 422 ft 3 in. and 441 ft 0 in.
8.3-26	Cable Tray Plans - Reactor Building El. 471 ft 0 in. and 501 ft 0 in.
8.3-27	Cable Tray Plans - Miscellaneous Details El. 522 ft 0 in.; Reactor Building
8.3-28	Cable Tray Plans - Reactor Building El. 448 ft 0 in. and 572 ft 0 in.
8.3-29	Cable Tray Plans, Sections and Details - Reactor Building
8.3-30	Cable Tray Plans, Sections and Details - Reactor Building
8.3-31	Division 3 (HPCS) Diesel Generator Transient Response
8.3-32	Critical Bus SM-4 Undervoltage Protection, Bus Transfer, and Loading Sequence
8.3-33	Cable Tray Plans, Sections and Details - Radwaste and Control Building
8.3-34	Cable Tray Plans, Cable Spreading Room - Radwaste and Control Building
8.3-35	Cable Tray Plans, Cable Spreading Room - Radwaste and Control Building
8.3-36	Cable Tray Plans, Sections and Details - Radwaste and Control Building

Chapter 8

ELECTRIC POWER

LIST OF FIGURES (Continued)

Number	Title
8.3-37	Cable Tray Plans, Sections and Details - Radwaste and Control Building
8.3-38	Cable Tray Plans, Sections and Details - Radwaste and Control Building
8.3-39	Power Generation Control Complex Plan - Cable Routing Detail
8.3-40	Power Generation Control Complex - Basic Assemblies and Shipping Configuration
8.3-41	Power Generation Control Complex - Termination Cabinet Assembly
8.3-42	Power Generation Control Complex - Termination Cabinet Field Connection
8.3-43	Power Generation Control Complex - Termination Cabinet - Termination Devices
8.3-44	Power Generation Control Complex - Cable Isolation Design
8.3-45	Power Generation Control Complex - Firestopping Detail
8.3-46	Power Generation Control Complex - Floor Section Assembly
8.3-47	Power Generation Control Complex - Mini-Duct Detail
8.3-48	Power Generation Control Complex - Fire Suppression
8.3-49	Power Generation Control Complex - Cable Routing Method
8.3-50	Non-Class 1E Circuit Categories Requiring Analysis (Sheets 1 through 3)
8.3-51	Associated Circuit Categories (Sheets 1 and 2)
8.3-52	Direct Current One-Line Diagram (Sheets 1 and 2)
8.3-53	Four Division Grouping of the Neutron Monitoring System Utilizing Four Drywell Penetrations

Chapter 8

ELECTRIC POWER

8.1 INTRODUCTION

8.1.1 UTILITY GRID DESCRIPTION

Columbia Generating Station plant power output is connected to the Bonneville Power Administration (BPA) 500-kV transmission system. The two sources of offsite power are provided by connections to the BPA 230-kV and 115-kV transmission systems.

The BPA has an installed hydroelectric generating capacity of over 15.7 million kW. The BPA transmission facilities include over 15,012 miles of 115-kV to 500-kV ac and 1000-kV dc transmission lines and over 300 substations. These transmission facilities together with the hydroelectric generators mentioned above comprise the Federal Columbia River Power System.

The federal Columbia River Power System is interconnected at more than 100 locations with 17 other transmission systems, including major interconnections with other regions. Three high-voltage transmission line interconnections (two 500-kV ac, one 1000-kV dc) of the Pacific Northwest-Pacific Southwest Intertie are in operation.

Two 500-kV ac lines interconnect the federal Columbia River Power System with British Columbia, Canada. Several 230-kV ac lines interconnect the eastern portion of the system with utilities in the mountain states and adjacent Canadian provinces. These interconnections provide, in addition to mutual support in the event of a breakdown or emergency, the means for mutually beneficial exchange of peaking capacity and energy between the Pacific Northwest and other regions.

8.1.2 OFFSITE ELECTRICAL POWER SYSTEM DESCRIPTION

The offsite power system consists of the BPA grid; the step-up main transformer bank, and the 500-kV tie line to the BPA grid; the startup transformer and 230-kV tie line to the BPA grid; and the backup transformer and 115-kV tie line to the BPA grid.

The 1230 MVA main generator output is fed into the BPA grid at the BPA Ashe Switchyard 500-kV bus via the step-up main transformer bank and a 3000-ft long 500-kV tie line. The arrangements of the tie line and BPA 500-kV bus at Ashe Switchyard are shown in Figure 8.1-1. When the main generator is on the line, the Class 1E and non-Class 1E switchgear buses receive power from the main generator via a normal auxiliary transformer as shown in Figure 8.1-2. This source has sufficient capacity to carry both the plant normal auxiliary loads and the plant engineered safety feature (ESF) loads.

Two immediately available sources of power from the BPA grid are provided to supply offsite power, one from the BPA 230-kV grid and one from the BPA 115-kV grid. The 230-kV source is from the 230-kV bus at the BPA Ashe Switchyard via a 3000-ft long 230-kV tie line, through the startup transformer, to the 4.16-kV non-Class 1E switchgear buses to the Class 1E switchgear buses and the 6.9-kV switchgear buses. The arrangements of the BPA 230-kV grid at Ashe Switchyard and the 230-kV tie line to the plant are shown in Figure 8.1-3. The startup transformer and non-Class 1E switchgear bus arrangement is shown in Figure 8.1-2. An automatic fast transfer system is provided to transfer the 4.16-kV and 6.9-kV non-Class 1E buses from the normal auxiliary transformer to the startup transformer if the generator source is lost. This 230-kV source has sufficient thermal capacity to carry both the plant normal auxiliary loads and the plant ESF loads.

The 115-kV source is from the BPA 115-kV Benton Switchyard via a 4-mile long 115-kV tie line and the backup transformer to the Class 1E switchgear buses. The arrangement of the BPA Benton Switchyard and the 115-kV tie line to the plant is shown in Figure 8.1-4. The connections from the backup transformer to the 4.16-kV Class 1E switchgear buses are shown in Figure 8.1-2. If power is not available from the generator source and the 230-kV source, Class 1E buses SM-7 and SM-8 will be automatically transferred to the 115-kV system source. This 115-kV source has sufficient capacity to carry the Division 1 and 2 ESF loads only; the tie breakers between the 4.16-kV Class 1E and non-Class 1E buses are therefore automatically opened prior to the backup source breakers closing.

A communication system is provided between Columbia Generating Station and the BPA Ashe Switchyard for remotely controlling the 500-kV power circuit breakers, for synchronizing, for interlocking with the plant step-up main transformer bank, for equipment protection, and for communication. Columbia Generating Station has a Fiber Optic Transfer Trip (FOTT) system, consisting of communications, control, and annunciation equipment associated with the 230 kV and the 500 kV network interconnections between CGS and BPA's Ashe substation. The FOTT system is used to transmit critical trip, control, and indication signals for transmission line protection, breaker supervisory control and indication where the 500 kV FOTT will also transmit a backup ASHE 500 kV complete loss of bus protection signal as well as the 500 kV power circuit breaker position interlocks to the DEH/Turbine Control system. Various signals travel in both directions along fiber optic tele-communication channels for protection and operation of the 500 kV interconnections providing power to the network from the CGS generator and for protection of the 230 kV line interconnection providing station service to CGS.

The locations of the switchyard and electric power distribution system equipment appear in Figures 1.2-1 and 8.1-5. The layout arrangement of the 230-kV and 115-kV auxiliary power equipment appear in Figure 8.1-5.

8.1.3 ONSITE ELECTRICAL POWER SYSTEM DESCRIPTION

The plant onsite electrical power system consists of the main generator and the normal auxiliary transformers, standby ac power system, high-pressure core spray (HPCS) power system, 4.16-kV, 6.9-kV, and 480-V ac power distribution systems, 125-V and 250-V dc power distribution systems, ±24-V dc power distribution system, the 120/208 and 120/240-V ac instrumentation and uninterruptible power systems, and the 120-V ac reactor protection system (RPS) power system. These systems provide a diversity of dependable power sources which are physically isolated from one another.

The normal auxiliary transformers provide power to all plant auxiliaries and become the normal plant ac power source when the main generator is operating. One of the normal auxiliary transformers is a dual secondary type with both windings stepping down the generator voltage to 4.16-kV for supply of 4.16-kV non-Class 1E switchgear buses. The other normal auxiliary transformer steps down the generator voltage to 6.9-kV for supply of 6.9-kV non-Class 1E switchgear buses. Both transformers supply the switchgear buses via nonsegregated phase bus with main circuit breakers located in the switchgear. Removable links are provided in each of the transformer primary isolated phase bus ducts for isolation of the transformers.

The startup transformer (as described in Section 8.1.2) is a dual secondary type, stepping down the 230-kV line voltage to 4.16-kV and 6.9-kV. The 4.16-kV and 6.9-kV secondaries can supply power to the same 4.16-kV and 6.9-kV non-Class 1E switchgear buses supplied by the normal auxiliary transformers. Connections to the buses are also via nonsegregated phase bus with main circuit breakers located in the switchgear.

The backup transformer (as described in Section 8.1.2) steps down incoming 115-kV voltage to 4.16-kV and can supply backup power to two 4.16-kV Class 1E switchgear buses. All connections to the 4.16-kV switchgear buses are via cable to main circuit breakers located in the switchgear.

The standby ac power system provides an onsite power source for all ESF loads when the normal, preferred (startup), and backup offsite power supplies are not available.

The Division 1 and 2 standby ac power sources consist of two independent 4.16-kV Class 1E diesel generators, each connected to one of the two 4.16-kV Class 1E switchgear buses via two main circuit breakers. One breaker is located near the diesel generating unit; the other is located in the 4.16-kV Class 1E switchgear.

The Division 3 standby ac power source, which is supplied for the HPCS system and support auxiliaries, consists of one independent 4.16-kV Class 1E diesel generator connected to its own 4.16-kV Class 1E switchgear bus via a main circuit breaker located in the switchgear. Under the specific conditions described in Section 8.3.1.1.7.2.1, this standby power source has the

capability to be cross connected to the Division 1 or Division 2 buses via permanently installed cables. It does not have as high a capacity as the Division 1 or 2 standby sources; however, it is capable of providing power to critical Division 1 or 2 components required to maintain safe shutdown conditions.

The standby ac power system is sized to provide the required power to safely shut down the reactor, maintain safe shutdown condition, and operate ESF auxiliaries necessary for plant safety during and after shutdown.

The plant 480-V ac auxiliary power system distributes ac power necessary for normal auxiliary and ESF 480-V plant loads. All non-ESF elements of this distribution system are capable of being supplied from the normal auxiliary power source or from the startup power source via the 4.16-kV non-Class 1E switchgear. The ESF portions of the 480-V distribution system are supplied via the 4.16-kV Class 1E switchgear and therefore are capable of being supplied by either the normal, startup, backup, or standby sources (except that the HPCS power system cannot be supplied by the backup source).

The Division 1 and 2 plant 125-V dc power distribution systems provide two independent onsite sources of power for normal operation and ESF dc loads. A separate 125-V dc power system is also provided for the HPCS system.

A 250-V dc power system provides a reliable onsite source of power for the turbine auxiliary oil pumps and for RCIC pumps and valves.

The $\pm$24-V dc power system provides a reliable onsite source of power for process radiation monitoring instrumentation and nuclear instrumentation.

The 120/240-V uninterruptible ac power system provides for non-ESF plant communications, computer, and controls and instrumentation.

The 120/208-V non-Class 1E instrumentation ac power system provides power for non-ESF control and instrumentation loads. However, the system is supplied via the 480-V Class 1E motor control centers.

The 120/240-V critical (Class 1E) instrumentation ac power system provides power for ESF plant controls and vital instrumentation in the main control room. The system is separated into Division 1 and Division 2 portions with separate distribution panels, static switches, inverters, and ac and dc sources fed from their respective divisional sources.

The RPS power system, including the RPS motor generator (MG) sets, supplies power to the logic system that operates the RPS. The power system contains sufficient stored energy to remain available throughout switching transients. The safe failure characteristics of the RPS exempt the power system from being classified essential. However, redundancy is provided to

avoid an unnecessary plant shutdown on interruption of power to one RPS bus. The system is also grounded, preventing unsafe failures that might occur from multiple grounds.

A supervisory (multiplexing) system is provided between the main plant and the standby service water (SW) pump house, makeup water pump house, cooling tower, and meteorological tower areas to monitor and control operation of equipment at these locations from the main control room. There are no safety-related control functions performed by the supervisory systems.

The main one-line diagram appears in Figure 8.1-2. The electrical symbol designators are shown in Figure 8.1-6.

Compliance with Regulatory Guides 1.81, 1.89, and 1.93 is addressed in Section 1.8.

8.1.4 SAFETY LOADS

The principal ESF subsystem device loads requiring electric power to perform safety functions are included in Tables 8.3-1, 8.3-2, and 8.3-3. Tables 8.3-1 and 8.3-2 indicate the redundant (Divisions 1 and 2) loads associated with safe shutdown systems. Table 8.3-3 indicates loads associated with the HPCS power system (Division 3). Table 8.1-1 indicates the safety functions performed and the type of power source used by each of the ESF systems.

8.1.5 DESIGN BASES

8.1.5.1 Offsite Electrical Power System

The offsite power system is designed to provide reliable offsite power sources to plant auxiliary systems during plant startup and shutdown or any time that power is unavailable from the main generator.

To minimize the possibility of line failures from such causes as wind, ice loading, temperature, lightning, and flooding the transmission lines interconnecting the plant with the utility systems are designed and constructed in accordance with the industry standards for environmental conditions prevalent in the area.

The 500-kV plant output and 230-kV plant startup lines originating at the Ashe Switchyard located 3000 ft north of the plant site run parallel to each other on separate rights-of-way.

The backup 115-kV line from Benton Switchyard, geographically isolated from the 500-kV and 230-kV lines, approaches the plant site from a southeasterly direction and does not run parallel to or cross the other lines. It is physically independent of the 500-kV and 230-kV lines and provides another power source for ESF loads. Its physical separation from the 500-kV and 230-kV lines minimizes the likelihood of a simultaneous outage of all offsite sources.

The normal power supply to plant auxiliary loads is provided through the normal auxiliary transformers connected to the generator bus. On trip of the generator, the auxiliary loads are automatically fast transferred (simultaneous open/close) to the startup transformer for supply of offsite power.

Normally only one power supply breaker to a bus is closed. During manually initiated transfer after startup, during shutdown, or when removing a transformer for maintenance, the closing of one circuit breaker initiates the trip of the other, allowing only momentary paralleling of two sources.

Operation of undervoltage relays on the 4.16-kV Class 1E buses is designed to start the associated diesel generators and initiate load shedding and sequencing control as described in Sections 8.3.1.1.7.1.7 and 8.3.1.1.7.2.7.

Station blackout is addressed in Appendix 8A.

The offsite power system is designed in accordance with the applicable portions of the following criteria, with a level of implementation as described in Section 8.2.2.4. Specific data regarding the use of alternate approaches in instances of nonconformance are discussed therein.

a. General Design Criterion (GDC) 17 - Electric Power Systems

b. GDC 18 - Inspection and Testing of Electric Power Systems

c. GDC 33 - Reactor Coolant Makeup

d. GDC 34 - Residual Heat Removal

e. GDC 35 - Emergency Core Cooling

f. GDC 38 - Containment Heat Removal

g. GDC 41 - Containment Atmosphere Cleanup

h. GDC 44 - Cooling Water

i. IEEE 308-1974 - Class 1E Electrical Systems for Nuclear Power Generating Stations

j. Regulatory Guide 1.32, Revision 2 - Use of IEEE 308-1974

Fiber Optic Transfer Trip (FOTT) system consists of communications, controls, and annunciation equipment transmitting signals between CGS and the ASHE substation for 230 kV and 500 kV transmission line protection, backup ASHE 500 kV complete loss of bus protection, supervisory control and indication of the 500 kV bus tie breakers, and 500 kV breaker position indication inputs to the DEH/Turbine Control System protection logic.

CGS FOTT system is based on the concept of "quad redundancy," or two sets of redundant systems. This design eliminates single point vulnerability. This redundancy allows for on-line maintenance, so maintenance can be done more frequently.

This system includes digital, tele-communication components. It uses bi-directional SONET Ring configuration which provides multiple transmission paths for the information between CGS and Ashe Substation. This increases the reliability of the system.

The response time for the system does not add unnecessary time delay to the clearing or operating times of the protection scheme. FOTT signal transit time is approximately one cycle (16 ms).

There is a Sequence of Events Recorder (SER) in the CGS Communication Room (RW 525) that provides a time tagged record of alarms in the case of a plant FOTT initiated plant trip, or other FOTT equipment problems during plant operations that are visible to PBA dispatch control centers. The SER processes signals from both ends of the FOTT system from Ashe or CGS that also that also drives two trouble alarm annunciator windows in the CGS Main Control Room for either the 230 kV FOTT or the 500 kV FOTT system.

8.1.5.2 Onsite Electrical Power System

The onsite power system is designed to supply the power requirements of all auxiliary plant loads during normal operation and to ESF loads when required. Sufficient instrumentation and protective control devices are provided to maximize operational reliability and availability of the supply system.

Those portions of the onsite power system required for the distribution of power to ESF electrical components are designed to provide reliable availability of power essential to shut down and maintain the unit in a safe condition and/or limit the release of radioactivity to the environment following a design basis accident (DBA). The physical events that accompany such an accident will not interfere with the ability of the system to mitigate the consequences of that accident within the acceptable limits, even assuming a single, simultaneous failure in the electrical system.

Two immediate access (offsite) power sources are provided for the Division 1 and Division 2 ESF systems; one immediate access (offsite) power source is provided for the Division 3 (HPCS) system. One additional offsite power source is available to each (Division 1, 2, and 3)

division by disconnecting the main generator bus links and backfeeding the safety-related buses from the 500 kV network. Additionally, one independent Class 1E 4.16-kV diesel generator and one independent Class 1E 125-V dc system are provided for each division load group.

The redundant ESF electrical load groups (Divisions 1 and 2) are provided with separate onsite standby power sources, electrical buses, distribution cables, controls, relays, and other electrical devices. Redundant parts of the system are physically independent to the extent that no single credible event, including a single electrical failure, will cause loss of power to both redundant load groups. An independent raceway system is provided to meet load group cable separation requirements for each of these divisions, as well as for the HPCS (Division 3) and RPS (Division 4, 5, 6, and 7) divisions.

Each Division 1 and 2 standby power source has sufficient capacity to provide power to all its required divisional loads. In the event of loss of the normal and offsite power sources (as detected by 4.16-kV Class 1E bus undervoltage) or receipt of LOCA signals, these standby sources are designed to start and, if an undervoltage condition exists, connect automatically. This is accomplished in sufficient time to maintain the reactor in a safe condition, safely shut down the reactor, or limit the consequences of a DBA to acceptable limits.

The standby electrical system 4.16-kV Division 1 or 2 switchgear buses and associated diesel generators, 480-V ac auxiliary distribution systems, 120/208-V ac, 120/240-V ac, and 125-V and 250-V dc power and control systems all conform to Seismic Category I requirements and are housed in Seismic Category I structures. Detailed descriptions of equipment seismic design and capability are contained in Section 3.10.

The Division 3 HPCS standby power source is designed to supply all power required for emergency core cooling (water spray) in the event of a LOCA. The system consists of the 4.16-kV HPCS switchgear bus, HPCS pump motor and diesel generator, and the associated 480-V HPCS auxiliary distribution system supplying motor-operated valves, engine cooling water pumps, and miscellaneous engine auxiliary loads. The system is capable of performing its function when subjected to the effects of prevalent natural phenomena at the plant site and is designed in accordance with Class 1E requirements. All HPCS system equipment is housed in a Seismic Category I structure. The system is self-contained, except for access to the normal and offsite sources of power (by connection through the plant ac power distribution system) and for instrumentation connection to the LOCA start signal. Isolated operation independent of electrical connections to other power sources is accomplished by use of direct connection to the 4.16-kV HPCS diesel-generator. Auxiliary equipment such as heater, air compressor, and battery charger are supplied from the same power source as the HPCS pump motor.

In the event that offsite power is unavailable, the HPCS diesel generator (standby power source) can furnish onsite power in sufficient time to provide all power for startup and operation of the HPCS pump motor compatible with accident mitigation. The diesel generator

starts automatically on receipt of 4.16-kV HPCS bus (SM-4) undervoltage or plant LOCA signals. Under the condition of bus SM-4 undervoltage, the diesel generator unit is also connected to the bus automatically. The HPCS diesel generator has an electrical cross connect capability to allow it to energize selected Division 1 or Division 2 equipment by feeding from the HPCS bus to the associated Division 1 or Division 2 buses. The HPCS diesel generator does not have the capacity to assume all the Division 1 or 2 loads, however, it can energize selected loads during an extended station blackout or a non-DBA loss of offsite power as described in Section 8.3.1.1.7.2.1.

Manual controls are provided for all diesel generators to permit the plant operator to select the most suitable source to supply power to loads. An automatic start signal will override the test mode. Provision is made for control from both the main control room and from the diesel generator building local control panel.

The RPS power system is designed to serve as a continuous, dependable source of power for the RPS logic. The system supplies power from two independent MG set sources, each capable of sustaining output voltage and frequency where momentary loss of input power occurs (e.g., due to switching). The system is classified as nonessential (Division A and B) since loss of output power due to open, short, or ground causes the reactor to trip.

The onsite power system is designed in accordance with the applicable portions of the following criteria, with a level of implementation as described in Sections 8.3.1.2 and 8.3.2.2. Specific data regarding the use of alternative approaches in instances of nonconformance, and information regarding conformance to differing revisions of the criteria indicated below, are discussed therein.

a. GDC 3 - Fire Protection

b. GDC 17 - Electrical Power Systems

c. GDC 18 - Inspection and Testing of Electrical Power Systems

d. GDC 21 - Protection System Reliability and Testability

e. GDC 33 - Reactor Coolant Makeup

f. GDC 35 - Emergency Core Cooling

g. GDC 38 - Containment Heat Removal

h. GDC 41 - Containment Atmosphere Cleanup

i. GDC 44 - Cooling Water

j. Regulatory Guide 1.6, Revision 0 - Independence Between Redundant Standby (Onsite) Power Sources and Between Their Distribution Systems

k. Regulatory Guide 1.9, Revision 0 - Selection of Diesel Generator Set Capacity for Standby Power Supplies

l. Regulatory Guide 1.22, Revision 0 - Periodic Testing of Protection System Actuation Functions

m. Regulatory Guide 1.29, Revision 3 - Seismic Design Classification

n. Regulatory Guide 1.30, Revision 0 - Quality Assurance Requirements for the Installation, Inspection and Testing of Instrumentation and Electrical Equipment

o. Regulatory Guide 1.32, Revision 2 - Use of IEEE Standard 308-1974 Criteria for Class 1E Electric Systems for Nuclear Power Generating Stations

p. Regulatory Guide 1.40, Revision 0 - Qualification Tests of Continuous-Duty Motors Installed Inside the Containment of Water-Cooled Nuclear Power Plants

q. Regulatory Guide 1.41, Revision 0 - Preoperational Testing of Redundant Onsite Electric Power Systems to Verify Proper Load Group Assignments

r. Regulatory Guide 1.47, Revision 0 - Bypassed and Inoperable Status Indication for Nuclear Power Plant Safety Systems

s. Regulatory Guide 1.53, Revision 0 - Application of the Single-Failure Criterion to Nuclear Power Plant Protection Systems

t. Regulatory Guide 1.62, Revision 0 - Manual Initiation of Protective Actions

u. Regulatory Guide 1.63, Revision 0 - Electrical Penetration Assemblies in Containment Structures for Water-Cooled Nuclear Power Plants

v. Regulatory Guide 1.73, Revision 0 - Qualification Tests of Electric Valve Operators Installed Inside the Containment of Nuclear Power Plants

w. IEEE 279-1971 - Criteria for Protection Systems for Nuclear Power Generating Stations

x. IEEE 308-1974 - Class 1E Electrical Systems for Nuclear Power Generating Systems

y. IEEE 323-1971 - Standard for Qualifying Class 1E Equipment for Nuclear Power Generating Stations

z. IEEE 338-1971 - Criteria for Periodic Testing of Nuclear Power Generating Station Class 1E Power and Protection Systems

aa. IEEE 344-1971 - IEEE Recommended Practices for Seismic Qualification of Class 1E Equipment for Nuclear Power Generating Stations

bb. IEEE 387-1972 - Trial Use Criteria for Diesel Generator Units Applied as Standby Power Supplies for Nuclear Power Generating Stations

Table 8.1-1

Engineered Safety Feature Systems

System and Function	Power Supply	Section
Containment systems		
Containment cooling system (RHR suppression pool cooling)	ac, dc	6.2
Primary containment isolation system (NSSS)	ac, dc	6.2
Reactor building ventilation and pressure control system	ac, dc	7.3
Emergency core cooling system		
High-pressure core spray system	ac, dc	7.3
Low-pressure core spray system	ac, dc	7.3
Automatic depressurization system	dc	7.3
Residual heat removal system	ac, dc	7.3
Low-pressure coolant injection system		
Standby service water system (emergency equipment cooling water system)	ac, dc	7.3
Habitability systems		
Control room HVAC system	ac, dc	6.4
Fission product removal and control systems		
Standby gas treatment system	ac, dc	6.5

8.2 OFFSITE POWER SYSTEM

8.2.1 DESCRIPTION

The offsite power system consists of the following elements and the connections between them.

a. The Bonneville Power Administration (BPA) utility grid,
b. The 500-kV and 230-kV tie lines from the plant to the BPA Ashe Switchyard,
c. The 115-kV tie line from the plant to the BPA Benton Switchyard,
d. The plant main generators step-up main transformer bank, and
e. The plant startup and backup transformers.

See Section 8.2.2 for a discussion of conformance to applicable regulatory guides and standards.

8.2.1.1 Utility Grid Arrangement

The plant output 500-kV tie line is connected to the BPA utility grid at the Ashe Switchyard located 3000 ft north of the plant. Figure 8.1-1 shows the BPA Ashe 500-kV Switchyard arrangement and the connection of the plant 500-kV tie line.

The BPA 500-kV bus at the Ashe Switchyard is a double bus-double breaker arrangement. The Ashe 500-kV bus is tied into the BPA 500-kV network by four 500-kV lines that connect to the Hanford, Slatt, Lower Monumental, and Marion 500-kV Switchyards.

The BPA line from Ashe to Hanford is 18 miles long and the BPA line from Ashe to Lower Monumental is 41 miles long. The BPA line from Ashe to Marion is 224 miles long. The BPA line from Ashe to Slatt is 72 miles long. Each line has a thermal load capacity of about 3000 MW.

The protective relaying for the 500-kV lines and 500-kV bus protection consists of redundant microprocessor relays and transfer trips. The Hanford, Lower Monumental, and Slatt lines are equipped with single pole switching and high-speed reclosing for single line to ground faults. A breaker failure scheme is provided so that in the event of a breaker failure to trip on a fault, only the bus sections adjacent to the failed breaker are lost. For complete loss of the ASHE 500-kV bus when the generator is synchronized to the network where primary relaying has failed to isolate a bus section (north or south bus sections), backup protection that clears all remaining power circuit breakers will initiate a transfer trip signal via the Fiber Optic Transfer Trip (FOTT) communication link to the station's unit protection lockout relays that enable interlocks to trip the turbine generator, SCRAM the reactor and trip plant auxiliary distribution system breakers. For this condition, a complete loss of the ASHE 500-kV bus that separates the generating unit from the 500-kV network, the generating unit protection system will also initiate fast transfer of auxiliary plant loads to the startup transformer to support unit shutdown.

The BPA network 230-kV bus arrangement at the Ashe Switchyard is shown in Figure 8.1-3. The 230-kV bus is a main bus-transfer bus type configuration. The BPA 230-kV line from the Ashe Switchyard to the DOE 230-kV loop is 9.5 miles long and the BPA 230-kV line from Ashe Switchyard to the BPA White Bluffs Substation is 5 miles long. Each line has a capacity of about 350 MW. The 230-kV line from Ashe to the DOE 230-kV loop is equipped with redundant protective relays for line fault protection with a three terminal line transfer trip scheme. The protective relaying for the 230-kV line to the White Bluffs Switchyard consists of redundant protective relays. Both lines are provided with a local breaker failure trip.

The BPA network arrangement at Benton Switchyard is shown in Figure 8.1-4. Benton Switchyard is located 3 miles east-southeast of Columbia Generating Station (CGS). The BPA 115-kV bus at Benton has a main bus-transfer bus configuration. The network connections that can supply power to the Benton Switchyard are the two lines to Midway Switchyard (29 miles long), the two lines to Franklin Substation (21 miles long), and the two lines to White Bluffs (11 miles long). Each of these lines has a capacity of over 100 MW. The lines out of the BPA Benton Switchyard are equipped with redundant microprocessor protective relays for line fault protection. All lines are equipped with breaker failure relays to provide local breaker failure backup.

8.2.1.2 Offsite Power Transmission Lines

The 500-kV transmission lines involved in this area are predominantly two or three bundle conductor designs. The isokeraunic level is five, i.e., an average of five thunderstorm days per year occur in the area of the station, which is reasonably low. Most existing lines east of the Cascades have continuous overhead ground wires. All future 500-kV lines east of the Cascades will also have continuous overhead ground wires for their entire length.

The 500-kV plant output transmission line originates at the CGS step-up main transformer bank and extends 3000 ft to the 500-kV Ashe Switchyard. Connection at the step-up main transformer bank is made via flexible conductors from each transformer HV bushing connection to the ground mounted (post type) overhead 500kV hard bus that in turn uses flexible conductors from the hard bus below the A-frame connection point onto the CGS side of this 500kV transmission line providing plant output over to the Ashe 500kV bus.

The line is a horizontal flat spaced configuration using triple bundle cable. Each phase conductor consists of three aluminum cable steel-reinforced “bunting” subconductors maintained at constant spacing by fixed spacers. Standard Stockbridge dampers are used to damp aeolian vibration if needed. Subconductor twisting has not been a problem on existing lines and it is not anticipated that this problem will occur on this line. Accumulation of dust on insulators is a problem only when transmission lines cross areas where intensive farming activities occur. Since the 500-kV line is not traversing cultivated areas, this problem is not expected to occur. With the use of continuous overhead ground wires and an isokeraunic level

of five, it is anticipated that lightning caused outages will not be a problem. Conductors and towers are designed for 0.5 in. (uniform distribution) ice loading and 8 psf wind loading. Since ice storms produce nonuniform coatings of ice of density between 14 and 27 lb/ft^3, and the design basis covers ice at 57 lb/ft^3, the towers and conductors should be capable of withstanding an asymmetrical ice loading of approximately 2 in. thickness. The type of storm required to deposit this much ice is unlikely to occur east of the Cascade Mountains where the plant is located.

The 230-kV preferred plant startup and safe shutdown transmission line is 3000 ft long, originating at the 230-kV Ashe Switchyard and connecting to the CGS startup transformer. The 115-kV backup plant safe shutdown transmission line is 4 miles long. It originates at the Benton Switchyard and connects to the CGS backup transformer via a circuit breaker, and a BPA owned and operated 115kV disconnect switch, B599, located east of the transformer yard.

All incoming and outgoing lines have lightning arresters connected at the transformer terminals.

Figures 1.2-1 and 8.1-5 show the relative physical locations of the generating plant buildings, step-up main transformer bank, normal auxiliary transformers, startup and backup transformers, transmission lines, and distribution equipment.

8.2.1.3 Main Generator and Step-Up Main Transformer Bank

The turbine generator is rated at 25-kV, 1230 MVA, 0.975 power factor and has a hydrogen-cooled rotor and water-cooled stator. The generator neutral is grounded through a transformer with a secondary resistor. The brushless excitation system consists of a permanent magnet-pilot exciter, ac main exciter, and rotating rectifier assembly connected to the generator shaft. Current transformers are provided in the main leads for relaying and metering. Main generator data is given in Table 8.2-1.

The generator is connected to the step-up main transformer bank with a forced-air-cooled, isolated phase bus duct. Potential transformers for relaying, metering, and voltage regulation are provided and connected to the isolated phase bus duct. Separate isolated phase bus ducts are tapped from the main bus to supply power to the normal auxiliary transformers.

The main transformer bank, stepping up generator output from 25-kV to 500-kV, consists of four single phase transformers (one transformer is spare). The bank is delta connected on the primary (low voltage) side, and wye connected on the secondary (high voltage) side with a solidly grounded neutral.

The location of the generator step-up main transformer bank is outdoors on the north side of the turbine generator building.

The generator stator winding is protected against internal faults by high-speed differential relays. Stator ground fault protection is provided by a neutral ground overvoltage relay in the high impedance grounding circuit. An instantaneous overvoltage relay is also furnished in the circuit to provide ground fault protection during turbine generator warm-up.

The generator rotor is protected against excessive heating due to asynchronous operation by loss of field relays. Protection from excessive heating due to unbalanced stator winding currents is provided by negative sequence current relays. The steam turbine is protected against excessive heating caused by motoring of the generator during periods of a low or zero steam flow by differential pressure anti-motoring devices. Directional power relays are provided to back up the antimotoring devices. In addition, an instantaneous overcurrent relay is provided to give backup protection when the 500-kV breakers are open.

Under frequency relays are provided for protection of the turbine.

The step-up main transformer bank is protected against faults by high-speed differential relays and by sudden pressure relays.

Relay signals from any of the generator or step-up main transformer bank protective devices previously described will trip the generator field, trip the 500-kV Ashe Switchyard power circuit breakers, and trip appropriate plant auxiliary distribution system breakers. Fast transfer to the plant startup transformer would also be initiated automatically by the generating unit trip system (see Section 8.2.1.4).

In addition to the primary level of fault protection described above, there is a secondary level of protection provided by unit overall differential relays. The zone for these relays includes the generator, isolated phase generator bus, the normal auxiliary transformers, and generator step-up main transformer bank.

Step-up main transformer bank oil levels, oil temperature, and winding hot-spot temperatures are also monitored and annunciated, but the associated relays do not initiate tripping.

8.2.1.4 Normal Auxiliary, Startup, and Backup Transformers and Buses

The two normal auxiliary transformers (TR-N1, TR-N2), the startup transformer (TR-S), and the backup transformer (TR-B) are located outdoors at the north side of the turbine generator building. The TR-N1, TR-N2, and TR-S are connected to the ac distribution system by nonsegregated phase bus ducts. The TR-B is connected by cable.

All transformers are three-phase, outdoor, oil-filled type with wye connected secondary (low-voltage) windings individually resistance grounded (transformers TR-N1 and TR-S are dual secondary winding type). The normal auxiliary transformers and backup transformer have ratings at both 55°C and 65°C temperature rise; the startup transformer is rated at 65°C temperature rise.

The normal auxiliary transformers together have the capability of supplying all plant operating loads. Transformer primary (high-voltage) windings of each are delta connected. The 25/4.16/4.16-kV dual secondary transformer (TR-N1) is rated 24/32/40 MVA at 55°C temperature rise, OA/FA/FA cooled. The secondary windings are rated 9.6/12.8/16 MVA and 14.4/19.2/24 MVA. The ratings at 65°C are approximately 12% higher. The 25/6.9-kV transformer (TR-N2) is rated 16.2/23.63/31.25 MVA at 55°C temperature rise, OA/FA/FA cooled. The 65°C rating is approximately 31.7 MVA.

The startup transformer (TR-S) has the capacity to supply full startup, normal running, and engineered safety feature (ESF) shutdown loads for Divisions 1, 2, and 3. Transformer primary (high-voltage) winding is wye connected with a solid connection to ground. An intermediate delta connected winding is provided between the single wye connected primary and dual wye connected secondary windings. This 230/6.9/4.16-kV transformer is rated 42/56/68.66 MVA at 65°C temperature rise OA/FA/FA cooled. The 6.9-kV secondary winding is rated 18/24/28.66 MVA and the 4.16-kV secondary winding is rated 24/32/40 MVA.

The backup transformer (TR-B) has the capability of supplying the full power requirements of the ESF systems for both Division 1 and Division 2. Transformer primary (high-voltage) winding is wye connected with a solid connection to ground. An intermediate delta connected winding is provided between the wye connected primary and secondary winding. This 115/4.16-kV transformer is rated 10/12.5 MVA at 55°C temperature rise, OA/FA cooled, and 11.2/14 MVA at 65°C, OA/FA cooled.

Figure 8.1-5 is a representation of the physical layout of the supply circuitry which connects the startup transformer and the backup transformer to their respective transmission lines.

Protective relaying provided for each transformer includes differential current and sudden pressure relays to sense internal transformer faults, and primary overcurrent relays to provide backup for secondary faults. These relays in turn actuate the affected transformer lockout relay.

Additionally, separate open phase protection features are provided to detect an open phase condition in both the 230kV offsite power transmission line connection to TR-S and in the 115kV offsite power tie line to TR-B.

The purpose of the Open Phase Detection System (OPDS) is to augment legacy high voltage line protection and transformer neutral overcurrent protection schemes to increase overall capability to detect and where necessary trip and isolate degraded offsite power sources at the network interconnection to TR-S or TR-B for a larger spectrum of fault conditions that would encompass open circuits with or without ground fault impedance (i.e., high impedance faults).

These open phase protection features help ensure objectives for qualified network sources to transmit necessary three phase power to the on-site AC power distribution systems are met. Each open phase protection scheme monitors the TR-S and TR-B high voltage interconnections during all plant loading conditions from standby (no load) to full load of the transformer. A main control room alarm is provided if an open phase fault is detected on the energized network connection when the transformers are in service from standby to full load operation. If the offsite power circuits are degraded due to open phase conditions when plant auxiliary loads are aligned to the TR-S or TR-B high voltage network sources, then an alarm is provided in the main control room and the affected transformer lockout relays are actuated by the OPDS to de-energize the affected degraded network connection.

Should the OPDS operate the TR-S (or TR-B) lockout relay circuit with offsite power supplying plant auxiliary loads and aligned to the 4.16kV ESF switchgear buses (i.e., station auxiliary power to the downstream 4.16kV ESF switchgear bus is not supplied by the main generator), isolation of the startup (or backup) transformer offsite power circuit will result in subsequent loss of preferred (of backup) power to downstream connected 4.16kV ESF switchgear buses. This power system operating condition in turn initiates existing Class-1E 4.16kV bus loss of voltage relays that will: (i) perform load shedding of the affected 4.16kV safety buses and (ii) actuate bus source selection transfer logic to align the next available source of AC power to the affected Class-1E 4.16kV ESF switchgear buses to restore reliable power to plant safety systems (FSAR 8.3.1.1.1).

The plant startup and backup transformers are also provided with overcurrent relays in the primary winding ground connection.

Protective relay signals from the normal auxiliary transformers will trip the generator field, and trip and lock out the 500-kV Ashe Switchyard power circuit breakers and appropriate plant auxiliary distribution system breakers. Transfer to the plant startup transformer would also be initiated automatically through lockout relays.

Protective relay signals from the startup transformer will trip and lock out the 230-kV Ashe Switchyard circuit breaker and appropriate plant auxiliary distribution system breakers. In the event the main generating unit is synchronized with the 500-kV system and plant auxiliaries are operating from the startup transformer and a loss of the startup transformer occurs, then a unit lockout condition will open the 500-kV Ashe Switchyard power circuit breaker, open the startup breakers (the normal breakers are already open), and trip the main turbine.

Protective relay signals from the backup transformer will trip and lock out the 115-kV circuit breaker located in the plant switchyard and the transformer secondary circuit breakers.

Undervoltage relays monitor the startup and back up transformer secondaries and trip the transformer secondary circuit breakers for loss of voltage.

In addition to the protective devices described above, all transformer secondary windings are provided with ground sensor relays which will alarm but do not initiate tripping. Reverse power relays on the startup and backup transformers will alarm if backfeed to the 230-kV or 115-kV system occurs.

8.2.1.5 Power System Communications

A communication system, including telephone facilities dedicated for electrical utility service, is provided between Columbia Generating Station and the BPA Ashe Switchyard. The system is an extension of the existing communication system owned and maintained by BPA.

The power source for the solid state communication equipment located at Columbia Generating Station is the non-Class 1E 125-V dc plant battery (see Figure 8.3-5.1).

The communication circuits also provide for the following functions:

a. Protective relaying,

b. Telemetering of net plant megawatts and megavars to Dittmer Control Center at Vancouver, Washington,

c. Transmission of turbine trip signal and other data to Dittmer Control Center, and

d. Control of the power circuit breakers associated with the plant 500-kV transmission line (from Columbia Generating Station and Dittmer) and the plant 230-kV transmission line (Dittmer only).

For additional discussion of both the Columbia Generating Station communication system and other (commercial, UHF radio) available plant communication systems, see Section 9.5.2.

8.2.2 REDACTED

Table 8.2-1

Main Generator Data

Rating, MVA	1230
Power factor	0.975
Voltage, kV	25
Frequency, Hz	60
Speed, rpm	1800
Hydrogen pressure, psig	75
Synchronous reactance[a]	173
Transient reactance[a]	43.4
Subtransient reactance[a]	29

[a] Percent at rated kVA and kV.

8.3 ONSITE POWER SYSTEMS

8.3.1 ALTERNATING CURRENT POWER SYSTEMS

8.3.1.1 Description

Principal elements of the Columbia Generating Station (CGS) auxiliary ac electrical systems are illustrated in Figure 8.1-2. Four auxiliary transformers are provided.

Normal auxiliary power is provided by two normal auxiliary transformer fed from the main generator 25-kV isolated phase bus. The startup transformer is connected to the Bonneville Power Administration (BPA) 230-kV H. J. Ashe Switchyard. These auxiliary systems each have the capacity to carry the full plant auxiliary load. A backup transformer is provided to supply all Divisions 1 and 2 plant engineered safety feature (ESF) loads. This transformer is supplied from the BPA Benton Switchyard via a 115-kV line to the plant. The transformer steps down the 115-kV supply to 4.16-kV and is connected by cables through circuit breakers to the 4.16-kV Class 1E switchgear buses SM-7 and SM-8.

8.3.1.1.1 4.16-kV and 6.9-kV Distribution System

The auxiliary transformers step down the available voltage as required to supply the 4.16-kV and 6.9-kV auxiliary switchgear buses. During normal operation, all load is carried by the normal auxiliary transformers. The startup transformer is used while the 25-kV main generator is being started and synchronized with the system. When this is accomplished, all auxiliary load is transferred (live load transfer) to the normal auxiliary transformers. The startup transformer remains energized from the 230-kV offsite power line to permit the auxiliary load to be automatically transferred back to it if power from either normal auxiliary transformer is lost. It is possible to operate the plant with auxiliary loads carried by the startup transformer.

The 4.16-kV non-Class 1E switchgear buses SM-1, SM-2, and SM-3 are fed from the secondary windings of the dual secondary winding normal auxiliary transformer (TR-N1) or from the 4.16-kV "Y" winding of the dual secondary winding startup transformer (TR-S). These buses supply the large non-Class 1E auxiliary motors and substations, and the Class 1E switchgear buses SM-4, SM-7, and SM-8. Permanently installed, locked open electrical cross connects between SM-2 and SM-1 and SM-3 allow for powering Division 1 or 2 equipment from SM-4 when plant conditions allow (see Section 8.3.1.1.7.2.1). The cross connect breakers are not installed in the switchgear. They must be installed and racked in prior to use. Use of the cross connect feature is controlled per plant procedures by administratively maintaining the source breakers open to prevent inadvertent paralleling of standby sources.

The 6.9-kV non-Class 1E switchgear buses are fed from the single secondary winding normal auxiliary transformer (TR-N2) or from the 6.9-kV "X" winding of the dual secondary winding

startup transformer (TR-S). These buses supply the non-Class 1E reactor recirculation pump adjustable speed drives (ASDs), cooling tower substations, and auxiliary substations.

The 6.9-kV and 4.16-kV auxiliary switchgear buses are arranged for distribution of power through a switchgear assembly of circuit breakers. The switchgear is of metal-clad, indoor design and has three-pole circuit breakers (draw-out type) with stored energy mechanisms fed from the plant dc systems.

Normal source power failure is detected by relays in the unit trip protective system and by undervoltage relays. Automatic transfer facilities are provided so that failure of normal supply causes immediate tripping of the normal supply circuit breakers and simultaneous closing of the startup transformer supply circuit breakers. This provides virtually continuous feed to the Class 1E and non-Class 1E switchgear buses of all divisions.

On loss of both normal and startup sources, or if the startup source is lost when the main generator is out of service, the tie breakers between the 4.16-kV Class 1E and the 4.16-kV non-Class 1E switchgear buses are automatically opened, thereby shedding all loads supplied via the 4.16-kV non-Class 1E buses. The 4.16-kV Class 1E bus undervoltage signals cause trips of all 4.16-kV feeder breakers except those breakers supplying 480-V substations. The Divisions 1 and 2 4.16-kV Class 1E buses (SM-7, 8) are then automatically transferred to the 115/4.16-kV backup transformer for supply of load. In the event this source is also unavailable, these buses would be automatically transferred to the onsite standby sources (Divisions 1 and 2 diesel generators). Reapplication of load is on a time priority basis. The loading sequence for buses SM-7 and SM-8, as shown in Tables 8.3-1 and 8.3-2 and Figures 8.3-1 and 8.3-2, is accomplished through the use of electromechanical time delay relays. The Division 3 [high-pressure core spray (HPCS)] 4.16-kV Class 1E bus (SM-4) cannot be connected to the backup source; loss of the normal/startup sources causes automatic transfer of this load, as shown in Table 8.3-3, to the Division 3 onsite standby source (Division 3 diesel generator). Load shedding and load sequencing are not required in this division. Permanently installed, electrical cross connect cables between SM-2 and SM-1 and SM-3 allow cross connecting Division 3 to Divisions 1 or 2 under conditions described in Section 8.3.1.1.7.2.1. This allows Division 3 to power selected Division 1 or 2 loads.

The 4.16-kV Class 1E buses SM-7 and SM-8 provide power to the 4.16-kV emergency core cooling system (ECCS) loads, control rod drive pumps, and (via stepdown transformers) the 480-V Class 1E buses SL-71, SL-73, SL-81, and SL-83. The 4.16-kV Class 1E bus SM-4 provides power to the 4.16-kV HPCS pump and (via stepdown transformer) the 480-V Class 1E motor control center (MCC) MC-4A (HPCS auxiliaries). Buses SM-7 and SM-8 can be fed from any of three sources, namely (1) normal auxiliary switchgear which receives power from either the normal auxiliary transformers or the startup transformer, (2) the backup transformer, or (3) standby diesel generators. Bus SM-4 can be fed from either of two sources, namely, (1) normal auxiliary switchgear which receives power from either the normal auxiliary transformers or the startup transformer, or (2) a standby diesel generator.

As shown in Figure 8.1-2.2, bus SM-7 supplies 4.16-kV Division 1 ESF loads and non-ESF control rod drive pump (CRD-P-1A). Subbus SM-75 supplies other 4.16-kV non-ESF loads, including the plant service water pump (TSW-P-1A). Class 1E breaker CRD-CB-P1A (SM-7 supply to CRD-P-1A) is automatically tripped on loss of offsite power (LOOP), and Class 1E breaker E-CB-7/75/1 (SM-7 supply to SM-75) is automatically tripped on a loss-of-coolant accident (LOCA) with LOOP to prevent overloading of DG1. This arrangement allows the plant service water pump to be supplied from Division 1 bus SM-7 during a LOCA when an offsite source is available. Division 2 loads are treated in a similar manner on buses SM-8 and SM-85.

Time delays are provided with timers to extend the intervals between auto starts of ECCS pumps on LOCA initiation with the TR-S supply. This prevents second level undervoltage relay operation due to excessive voltage drops and longer starting time resulting from simultaneous or overlapping starts of large motors. To improve bus voltages during LOCA (1) buses SM-72 and SM-82 are shed automatically on LOCA initiation, and (2) an electrical interlock prevents starting the second plant service water (TSW) pump during a LOCA.

The combined ECCS and TSW loads in Divisions 1 and 2 exceed the rated capacity of their respective diesels. Hence, feeder breakers 7-75/land 8-85/1 supplying buses SM-75 and SM-85, respectively, are tripped automatically on a LOCA with LOOP. Breakers 7-75/1 and 8-85/1 remain closed on LOOP without a LOCA, and the TSW pumps are started automatically to provide water for drywell cooling to ensure a controlled shutdown.

Two circulating water pumps, CW-P-1B and CW-P-1C, are tripped automatically on LOCA initiation leaving the third circulating water pump, CW-P-1A, operating during a LOCA. Starting of CW-P-1A under minimum grid voltage (230-kV) and maximum loading conditions during a LOCA is avoided by administrative procedure.

Manual live transfer of power between normal auxiliary and startup sources is possible either way by the main control room operator on the 4.16-kV non-Class 1E switchgear buses SM-1, 2, and 3. Likewise, manual live transfer of power between normal/startup and backup transformer sources is possible on the 4.16-kV Class 1E switchgear buses SM-7 or 8, although the startup source is the preferred offsite power source. Manual live transfer of power between the normal/start or the backup power source and the Division 1 or 2 standby power source is possible. This facilitates diesel generator testing without dropping loads or the return of loads from the diesel generator to the offsite power source on recovery of the offsite source following a total loss. However, synchronizing of any diesel generator with the normal auxiliary transformer is avoided by administrative procedures.

The primary undervoltage sensing scheme for the 4.16-kV Class 1E distribution system utilizes instantaneous undervoltage relays to start the Divisions 1 and 2 standby diesel generators immediately on loss of voltage at their associated 4.16-kV Class 1E switchgear buses. These

relays also energize timers which allow the system to attempt to establish supply from the startup source (if the plant is operating from the normal source at the time) or verify that voltage loss is maintained (if the plant is operating from the startup source initially).

In the event that voltage loss is maintained for 3.5 sec, the Division 1 and/or 2 timers trip the Class 1E bus normal/startup source breakers, institute load shedding, and energize additional 2-sec and 4-sec timers. The 2-sec timer is utilized to attempt closing of the backup source breakers; backup transformer undervoltage relays will inhibit breaker closure in the event of backup source undervoltage. The 4-sec timers are used to inhibit closure of the diesel generator breakers until the system has had time to attempt reestablishment of supply via the backup source.

When 4.16-kV Class 1E Division 1 and/or 2 buses are supplied from 115-kV backup source, a loss of the backup source initiates a timer. The timer trips the backup source breaker B-7 (B-8) after a 3.5-sec delay. This allows coordination of the backup source undervoltage relay with the associated incoming line and branch circuit overcurrent protection.

The primary undervoltage scheme for the 4.16-kV Division 3 Class 1E bus utilizes instantaneous undervoltage relays which energize a 2-sec timer. In the event that voltage loss is maintained for 2 sec, this timer trips the preferred source breaker and energize an additional 1-sec timer. The second timer, after timing out, starts the HPCS diesel generator and annunciates the loss of voltage in the control room. The diesel generator supply breaker will then close after the diesel has reached rated frequency.

See Sections 8.3.1.1.7.1.7 and 8.3.1.1.7.2.7 for additional discussion of the standby diesel generator starting and loading systems.

A second level of undervoltage protection is provided to protect against the effects of prolonged degraded voltage which could adversely affect the operation of Class 1E electric motors requiring at least 90% of the nameplate voltage for continuous operation (see Table 8.3-4). For this reason, Class 1E bus SM-4, SM-7, and SM-8 voltages are monitored by an additional set of Class 1E undervoltage relays. Three static type undervoltage relays are provided for Divisions 1, 2 and 3 and are connected to monitor all three line voltages (i.e., phases AB, BC, and CA). The arrangement utilizes a two-out-of-three logic to preclude the possibility of spurious voltage loss signal and facilitate testing.

In the event of sustained bus undervoltage (approximately 89.4% of nominal bus voltage lasting more than approximately 8 sec), the second level of undervoltage protection automatically trips the feeder breaker connecting the normal/startup sources to their respective 4.16-kV Class 1E buses. For Divisions 1 and 2, this action results in loss of bus voltage, thereby starting the diesel generators, initiating load shedding and energizing two of the

three bus transfer timers mentioned in the primary undervoltage scheme above. In this case the first 3.5-sec timer is bypassed. The 2-sec timer permits closing of the backup source breaker and the 4-sec timer permits closing of the diesel generator breaker assuming a failure of the backup source breaker to close. Closure of the backup source and diesel generator breakers is permitted if the source voltage is at least 94% of normal.

Should the degraded voltage condition exist on the backup power source while the source is supplying the load, the second level undervoltage relays would then isolate that source, again initiating the sequence of events described for the secondary undervoltage sensing scheme above. However, closing of backup feeder breakers, as part of that sequence of events, is blocked.

For Division 3, the second level undervoltage protection trips the normal/startup source breaker, thereby causing a loss of bus voltage. This energizes the second timer which results in diesel start and subsequent supply to Division 3 from the diesel generator.

The setpoints and allowable values for the 4.16-kV emergency bus loss of power instrumentation are as follows:

Type	Setpoint (Volts)	Allowable Value (Volts)
Loss of Voltage (Divisions 1, 2, and 3)		
4160 V basis	2782.5-2957.5	2450-3135
120 V basis	79.5-84.5	70.0-89.57
Undervoltage (Divisions 1, 2, and 3)		
4160 V basis	3711.8-3729.2	3685-3755
120 V basis	106.05-106.55	105.29-107.28

A blown P.T. fuse on the bus SM-7 or SM-8 would result in a spurious voltage loss signal for the primary and second level undervoltage relays. The primary undervoltage relays will trip the normal/startup source breaker and initiate auto transfer to the backup source. The second level undervoltage protection for the backup source is blocked in this event, in order to prevent cycling of the backup source breaker. The primary undervoltage protection for the backup source will be unaffected since the back-up source primary undervoltage relay is connected to a separate P.T. as shown in Figures 8.3-1 and 8.3-2. In this event, the ESF load breakers of the affected bus will trip and will not be available until the blown P.T. fuse is replaced. However, the ESF loads on the other two unaffected Class 1E buses will be available during this time for safe shutdown, if required.

When the Class 1E buses SM-7 and SM-8 are being fed from the turbine generator, the possibility of sustained undervoltage is not considered credible due to response characteristics of the voltage regulator and protection equipment for the unit.

The scheme described ensures a power source within the acceptable voltage limits for the Class 1E loads at all times. Circuit design allows for testing of the individual relays, one at a time, without disrupting the protective function. There are no bypasses of the protective action for this system.

The load shedding of these emergency buses, SM-7 and SM-8, due to under voltage during motor starting will not occur once the diesel generator is supplying power to the emergency bus. The minimum voltage on the emergency buses SM-7 and SM-8 as a result of motor starting when the associated diesel generator is supplying the bus is 80% or greater of the rated bus voltage. Since the Class 1E bus primary undervoltage relays are set at 69% of nominal bus voltage, reinstitution of load shedding as a result of voltage dip due to motor starting will not occur.

Technical Specifications for CGS include a test requirement to verify that on interruption of offsite power the loads are shed from the emergency buses and the loading of the onsite sources is sequenced by time delay relays in the motor start controls.

8.3.1.1.2 480-Volt Distribution System

Power for 480-V auxiliaries is supplied from unit substations consisting of 6.9-kV/480-V or 4.16-kV/480-V transformers and associated metal clad switchgear. Non-Class 1E 4.16-kV buses SM-1, 2 and 3, supply separate 480-V substations, each with its own power transformer and switchgear.

Class 1E 480-V substations supplying ESF loads are arranged as independent radial systems with each 480-V bus fed by its own power transformer. Each 480-V Class 1E bus is independent of the other 480-V buses; there are no cross ties. The 480-V auxiliaries required during emergency conditions are supplied from 480-V Class 1E buses SL-71 and SL-73 (Division 1) and SL-81 and SL-83 (Division 2). The HPCS 480-V auxiliaries are supplied from an independent transformer and Class 1E bus MC-4A (Division 3). Power supplies to all Class 1E auxiliary systems are arranged so that alternate or redundant auxiliary systems are supplied from 4.16-kV switchgear buses of separate Class 1E divisions.

The 480-V substations, in general, supply 460-V motor loads larger than 100 hp and all MCC loads. Switchgear for 480-V substations is of the indoor metal clad type with draw-out circuit breakers operated from the plant dc system, with the exception of SL-54 which is equipped with molded case circuit breakers. Phase to ground fault currents are limited to a maximum of 10 amp by use of neutral ground resistors in all substation transformer neutral ground

connections. All substation transformer neutral ground connections and switchgear branch feeder circuits are equipped with ground detection devices and alarms.

The 480-V MCCs feed motors 100 hp and less (in general), control power transformers, heaters, motor-operated valves (MOVs), all other small electrically operated auxiliaries, and all lighting. Control centers are isolated in separate load groups corresponding to divisions established by the 480-V substation units. Branch circuit protection for all loads is provided by fused disconnect switches equipped with current limiting fuses or molded-case circuit breakers. The fuses for the MC-8BA subfeed also provide backup overcurrent protection for containment penetration circuits in accordance with Regulatory Guide 1.63.

Class 1E MCCs are shown on the auxiliary one-line diagram (Figure 8.3-4).

8.3.1.1.3 120/240-Volt (Non-Class 1E) Plant Uninterruptible Power System

The non-Class 1E plant uninterruptible power system supplies 120/240-V ac to station services where uninterruptible power is required, such as for plant computer and plant instrumentation [e.g., digital electrohydraulic control system (DEH) cabinet]. This source of power is necessary for plant operational loads, but does not supply ESF loads. Power is distributed via a single phase, three-wire, grounded neutral system.

Failure of the non-Class 1E uninterruptible power system has no adverse effect on station safety since no ESF loads are supplied from this system.

The plant uninterruptible power system receives its power from a static inverter-static switch arrangement fed both from a 250-V dc station battery (float source) and from a 480-V ac Class 1E MCC (preferred source) as shown in Figure 8.3-5.1. During faults on the uninterruptible power system the static switch will automatically transfer loads to a regulated alternate source, which supplies sufficient fault current to blow the circuit fuse and clear the fault.

Manual bypass switches are also provided to bypass the plants uninterruptible power systems and transfer load to a regulated bypass source. This will allow for maintenance and inspection of the system.

8.3.1.1.4 120/208-Volt Non-Class 1E Instrumentation Power System

Power is supplied to non-Class 1E plant instrumentation at 120/208-V ac via a three-phase, four-wire, grounded neutral distribution system. This distribution system supplies power to the 115-V ac transversing in-core probe (TIP) of the neutron monitoring system and other non-Class 1E instrumentation loads.

Failure of the noncritical instrumentation power system has no adverse effect on station safety since no ESF loads are supplied from this system.

Alarm and fault detection equipment is provided to alert the operator of possible trouble. All equipment associated with the 120/208-V non-Class 1E instrumentation power system is readily accessible for inspection and maintenance on a routine basis in accordance with the manufacturer's recommendation.

8.3.1.1.5 Divisions 1 and 2 120/240-Volt Critical (Class 1E) Instrumentation Power System

Power is supplied to critical plant instrumentation at 120/240-V ac via two single-phase, three-wire, grounded neutral distribution systems as shown in Figure 8.3-5.1. The ac power is normally fed into the systems from 15-kVA static inverter-static switch arrangements supplied from both the 125-V dc battery systems (primary sources) and the critical ac distribution panels (alternate sources). The static switches immediately transfer from the inverter sources to separate ac sources on loss of inverter output or when the inverter output sensing circuit detects a 120% overload is present. The critical instrumentation power system is divided into Divisions 1 and 2 redundant circuits with separate inverters and static switches feeding into separate distribution panels (E-P-7AA and E-PP-8AA) in the main control room for service to ESF circuits in the nuclear steam supply system (NSSS). This system maintains the 120/240 Volt critical instrumentation, control and protection system power sources available from the associated inverter backed 125 VDC station battery even during the short interval when offsite power has been lost and standby power has not yet been applied to the Class 1E 4.16kV and 480 V AC buses (including the alternate AC power sources to each of the divisional inverter-static switch arrangements shown on Figure 8.3-5.1). Each 120/240 Volt Class 1E instrumentation power system division has two, full capacity, 15-kVA static inverters (E-IN-3A and E-IN-3B for Division 1 and E-IN-2A and E-IN-2B for Division 2). One inverter in each division will be the on-line unit supplying power to their associated vital instrument bus and the other will normally be available as an installed spare unit for use if the on-line inverter fails or has to be removed from service.

8.3.1.1.6 Reactor Protection System Power System

The reactor protection system (RPS) power system is designed to provide 120-V ac power to the logic and/or system components that are part of the RPS, the containment isolation system, the neutron monitoring system, and the process radiation monitoring system. It is designed to prevent inadvertent reactor trip or isolation due to a transient loss of power to the trip logic. See also Section 7.2.1.1.

The principal elements of the RPS power system are shown in Figure 8.3-5.2. The system consists of two high inertia, ac, motor generator (MG) sets.

Each of these high inertia MG sets has a voltage regulator which is designed to respond to a step load change of 50% of rated load with an output voltage change of not more than 15% and

keep the normal voltage limits to within ±10% of rated. The MG sets do not require manual operation or adjustment during coastdown or acceleration.

High inertia is provided by a flywheel. The inertia is sufficient to maintain the voltage and frequency of generated voltage within -5% of the rated values for at least 1 sec following a loss of power to the drive motor. However, prototype tests show that an RPS trip does not occur until approximately 4 to 5 sec after the loss of MG set power supply.

The 120-V ac power is supplied from two sources. The primary source of power is the MG sets previously described. The alternate source is from a non-Class 1E distribution panel which is powered from the main generator or the startup transformer. The MG sets themselves are supplied from separate Class 1E 480-V (Divisions 1 and 2) MCCs. Indicating lights are provided in the main control room to monitor the status of both the MG sets and the alternate feed.

To protect the RPS trip system from the unacceptable effects of sustained over/under voltage or under frequency from the non-Class 1E power sources, two series redundant Class 1E circuit breakers are provided between the RPS distribution panel and each of the non-Class 1E power sources, namely, the two RPS MG sets and the common alternate source. Each circuit breaker is provided with an independent set of Class 1E over/under voltage and underfrequency sensing relays. See Figure 8.3-5.2.

During operation, the RPS buses are energized by their respective MG sets. Either MG set can be taken out of service by manually operating the RPS transfer contactor which takes one MG set out and connects that RPS bus to the alternate power source. Provision is made to prevent connection of both RPS buses to the alternate source at the same time. A loss of power to either MG set is monitored in the main control room where the operator on detecting such a condition can switch to the alternate source. A complete, sustained loss of electrical power to both buses is required to cause a scram and containment isolation.

Equipment associated with the RPS power system is located in separate rooms where routine maintenance can be conducted. Motor generator sets can be inspected, serviced, and tested individually while using the alternate feed from the aforementioned distribution panel.

The electrical protective assembly (EPA) consisting of Class 1E protective circuitry is installed between the RPS and each of the power sources. The EPA provides redundant protection to the RPS and other systems which receive power from the RPS buses by acting to disconnect the RPS from the power source circuits.

The EPA consists of a circuit breaker with a trip coil driven by logic circuitry which senses line voltage and frequency and trips the circuit breaker open on the conditions of overvoltage, undervoltage, and underfrequency. Provision is made for setpoint verification, calibration, and adjustment under administrative control. After tripping, the circuit breaker must be reset manually. Trip setpoints are based on providing 115-V ac, 60-Hz power at the RPS logic

cabinets. The protective circuit functional range is ±10% of nominal ac voltage and -5% of nominal frequency.

The EPA assemblies are packaged in an enclosure designed to be wall mounted. The enclosures are mounted on a Seismic Category I structure separately from the MG sets and separate from each other. Two EPAs are installed in series between each of the two RPS MG sets and the RPS buses, and between the auxiliary power source and the RPS buses. The block diagram in Figure 7.2-11 provides an overview of the EPA units and their connections between the power sources and the RPS buses. The EPA is designed as a Class 1E electrical component to meet the environmental qualification requirements of IEEE 323-1974 (see Section 3.11) and the seismic qualifications requirements of IEEE 344-1975 (see Section 3.10). It is designed and fabricated to meet the quality assurance requirements of 10 CFR 50, Appendix B.

The enclosure dimensions are approximately 16 x 24 x 8 in. and accommodate power cable sizes from 6 AWG to 250 MCM.

8.3.1.1.7 Standby Alternating Current Power System

The standby ac power source for the plant consists of three diesel generator sets, each one serving ESF loads in its associated division (1, 2, 3), their attendant air starting and fuel supply systems, and automatic control circuitry. The diesel generator sets supply power to those electrical loads which are required to achieve safe cold shutdown of the plant and/or mitigate the consequences of a design basis event coincident with a loss of all offsite ac power. Tables 8.3-1, 8.3-2, and 8.3-3 list the equipment and loads supplied by each generator for both cases.

Each diesel generator (with its auxiliaries) is housed in a separate room as shown in Figure 1.2-22. The separating walls are designed as 3-hr fire barriers and will provide missile protection in the event of explosion or failure of rotating equipment. Each room is provided with its own ventilation and lighting systems. Design provisions ensure that flooding in one diesel generator room does not jeopardize the operation of the other diesel generators. The power, instrumentation, and control cabling associated with the diesel generators is contained in cable trays and conduits which meet the separation criteria detailed in Section 8.3.1.4. All equipment for these systems is identified as indicated in Section 8.3.1.3.

8.3.1.1.7.1 Redundant (Division 1 and Division 2) Standby Alternating Current Power Supplies.

8.3.1.1.7.1.1 General. The dual drive diesel generators comprising the Divisions 1 and 2 standby ac power supplies are designed to quickly restore onsite power to their respective Class 1E distribution system divisions in the event of coincident loss of all offsite ac power. Figure 8.1-2 shows the interconnections between the preferred power system and the Divisions 1 and 2 standby diesel generating units.

The dual drive engines utilized are medium weight, fabricated, main frame engines capable of rapid starting and quick acceptance of the electrical loads. Selection of the type of diesel engine utilized is based upon the advantages offered by the class of unit: the ability to start and accept rated load rapidly and repeatedly with enough dead load pickup capability to assume substantial incremental motor load additions.

8.3.1.1.7.1.2 Unit Ratings and Capability. The diesel generator sets for Divisions 1 and 2 each have a continuous service rating of 4400 kW. Diesel generator set short-term ratings are 4650 kW for 2000 hr, 4900 kW for 7 days, and 5150 kW for 30 minutes. The continuous rating of each diesel generator is based on an accident condition load which is larger than that required for a safe plant shutdown. The generators are rated 5812-kVA at 0.8 pf, which is sufficient to carry the 4650 kW short-term ratings at 0.8 pf. At higher kW outputs, the diesel generator sets would have to operate at a higher power factor.

The size of each of the diesel generators serving Divisions 1 and 2 satisfies the requirements of Regulatory Guide 1.9, Revision 0, and conforms to the following criteria:

a. The continuous (8000 hr/year) nameplate rating of each set exceeds the maximum required load indicated in Tables 8.3-1 and 8.3-2 under rated conditions. Engine brake horsepower required to supply calculated steady state load is also within each diesel engine's 8000 hr/year rated capability with an air inlet temperature of 115°F;

b. Each diesel generator is capable of starting, accelerating, and supplying its loads in the sequence shown on Tables 8.3-1 and 8.3-2 without exceeding 5% frequency drop (maximum). The units are capable of recovery to 98% of normal frequency in less than 2 sec;

c. Each diesel generator is capable of starting, accelerating, and supplying its load in their proper sequence without exceeding 20% voltage drop at its terminals (maximum). The units are capable of recovery to 90% of normal voltage is less than 2 sec;

d. Each diesel generator is capable of starting, accelerating, and running its largest motor at any time after the automatic loading sequence is completed, assuming that the motor had failed to start immediately;

e. Each diesel generator is capable of reaching full speed and voltage within 15 sec after receiving a signal to start, and can be fully loaded within 30 sec following the start signal; and

f. The speed of each diesel generator does not exceed 75% of the difference between nominal speed and the overspeed trip setpoint, or 115% of nominal

speed, whichever is lower, during recovery from transients caused by disconnection of the largest single load.

Each governor control system includes manual engine idle capability. Manually operating engines at a reduced speed for "warm up" or a "cool down" run prior to shutdown is recommended by manufacturer to minimize mechanical stress and wear. If a 4.16-kV Class 1E bus (SM-7, 8) primary undervoltage relay signal is received when operating engines at reduced rpm (idle speed), manual control is automatically bypassed. The engines are accelerated to rated speed and generator excitation (field flash) is initiated. The diesel generator is automatically brought to rated frequency and voltage attaining a ready-to-load condition within 15 sec.

8.3.1.1.7.1.3 Cooling Water Systems. Each engine in each diesel generator set has a closed cooling system consisting of a forced circulation cooling water system which cools the engine directly and a heat exchanger connected to the respective standby service water system. The cooling water pumps are driven directly from the engine crankshaft. The engine cooling water system incorporates provision for heat to maintain the engine jacket at a steady temperature when the engine is not running to ensure quick starts. The diesel generator cooling water systems are discussed in Section 9.5.5.

8.3.1.1.7.1.4 Lubrication Systems. The engines of each diesel generator set have self-contained lubrication oil systems consisting of lubrication sumps located at the base of each engine, lubrication oil pumps, piping, and heat exchangers. The lube oil heat exchanger is served by the diesel generator cooling water system. When the engine is not running, the temperature of the lube oil is maintained at a steady level with heaters and temperature controls to ensure quick starts. The diesel generator lubrication systems are discussed in Section 9.5.7.

8.3.1.1.7.1.5 Air Starting Systems. Diesel generators 1 and 2 have independent redundant air starting systems as discussed in Section 9.5.6; diesel generator 3 has redundant equipment, but not redundant independent systems.

8.3.1.1.7.1.6 Fuel Oil Systems. The diesel generator fuel oil storage and transfer systems are discussed in Section 9.5.4.

8.3.1.1.7.1.7 Automatic Starting and Loading Systems. In the event of loss of offsite sources of power to the onsite power bus, each diesel generator set is automatically started and loaded by independent control and circuitry. The starting circuitry and control power is provided by separate 125-V dc station batteries for Divisions 1 and 2 (see Section 8.3.2.1.1). The diesel generator starting logic and starting signals (shown in Figures 8.3-1, 8.3-2, and 8.3-7 through 8.3-10) are described as follows:

a. Each diesel generator starts immediately upon receipt of a 4.16-kV Class 1E bus (SM-7, 8) primary undervoltage relay signal or LOCA signals (reactor low water level and/or high drywell pressure);

b. On sustained loss of 4.16-kV Class 1E bus voltage, the bus is automatically isolated from the upstream non-Class 1E system. All loads on the bus are tripped, except for those small loads shown in Tables 8.3-1 and 8.3-2 as part of the initial load block fed by the 480-V unit substation;

c. After each diesel generator has attained approximately normal frequency and voltage, its breaker closes (if 4.16-kV Class 1E bus voltage has not been reestablished via the offsite system sources) thus immediately starting all loads belonging to the first block for which "starting required" signals are available for ESF actuation signals;

d. The starting of subsequent load blocks are delayed by time relays in accordance with Tables 8.3-1 and 8.3-2. Diesel generator capacity is such that units are capable of maintaining all required loads established by the loading schedules;

e. Limitation of diesel generator loading is maintained during the entire period the units are operate, since the Class 1E loads capable of being connected to the units exceed unit capability. However, as indicated in the loading schedules Tables 8.3-1 and 8.3-2, the maximum loads automatically connected to the Divisions 1 and 2 diesel generating units do not exceed individual diesel generator unit ratings (4400 kW each). Loading beyond the automatically applied load would require positive operator action to manually apply loads;

f. The minimum voltage projected to occur on the Class 1E buses (SM-7, 8) as a result of motor starting during periods when emergency plant load is being supplied by the diesel generators is greater than 80% of nominal bus voltage. The duration of voltage dip is expected to be very short lived in the order of 2 to 5 sec. Since the Class 1E bus primary undervoltage relays are set at approximately 69% of nominal bus voltage, initiation of load shedding as a result of voltage dip due to motor starting will not occur. Since the Class 1E bus secondary undervoltage relays are set at approximately 89.4% of nominal bus voltage (approximately 93% of motor nominal voltage) with a definite time delay of approximately 8 sec, they will not initiate any undesirable tripping action. If bus voltage were to dip below approximately 89.4% of nominal for more than approximately 8 sec, load shedding would be initiated;

g. If offsite power is still present, and the diesel generator is started by a LOCA signal, the diesel generator breaker will not close. However, the unit will continue to run at rated frequency and voltage until manually shut down; and

h. Means are provided for periodic exercising of each diesel generator under load. To accomplish this, supply of the 4.16-kV Class 1E bus associated with the diesel generator to be tested is transferred to the startup source. Under this condition the diesel generator to be tested is synchronized to the 230-kV startup source and loaded via manual adjustment of the unit speed controls. During periodic testing of a diesel generator, if a safety-injection actuation signal occurs, the diesel generator in test mode is disconnected from parallel operation with the offsite power system and maintained in the emergency standby mode. The diesel generator can automatically provide acceptable voltage and frequency for subsequent unit operation within requirements set by Regulatory Guide 1.9, Revision 0. See unit ratings and capability discussion in 8.3.1.1.7.1.2. In the event of a loss of voltage to the critical medium voltage bus, the associated diesel generator would be ready to accept load. Administrative procedures are used to prevent paralleling of the diesel generator with the normal auxiliary transformer so that the switchgear short circuit capability is not exceeded.

The control circuits for automatic start are provided with means for manual testing during normal plant operation and conform to criteria detailed in IEEE 279-1971. Means are provided to permit applying selected non-ESF loads in the plant to the diesel generator sets within their capabilities. However, this is a manual operation under the operator's full control. Under LOCA conditions, application of the non-ESF loads can only be accomplished after the LOCA parameters have been reduced below LOCA sensing instrumentation setpoints.

8.3.1.1.7.1.8 Protective Trips. The diesel generator protection system is designed such that on accident signal (low reactor water level, high drywell pressure) only the following diesel generator trips are effective:

a. Engine overspeed,
b. Generator differential relay action,
c. Incomplete sequence, and
d. Emergency stop push button.

During nonemergency operation of the diesel generator sets (such as testing) the engine is shut down and the generator breaker tripped under the following conditions:

a. Engine overspeed,
b. Generator differential relay action,
c. Incomplete sequence,
d. Emergency stop push button,
e. Generator loss of excitation,
f. Reverse current,
g. Generator overcurrent,

h. Generator overvoltage,
i. High jacket water temperature, and
j. Low lube oil pressure.

During a synchronizing test, the diesel generator is protected from overcurrent resulting from the non-Class 1E loads connected to the upstream buses, in the event of a loss of startup transformer power. The overcurrent protection results in isolation of the diesel generator emergency bus from the upstream non-Class 1E loads without disconnecting the diesel generator from the emergency bus.

The Divisions 1 and 2 standby diesel generator control circuits are shown in Figure 8.3-11 through 8.3-22.

The diesel generator incomplete sequence (fail to start) relay (K4) indicated in Figures 8.3-15 and 8.3-21 is designed to shut the generating unit down and lock it out in the event the normal starting cycle is not completed within a predetermined time. The relay is actuated if speed sensing instrumentation indicates that the unit requires in excess of 10 sec to accelerate to 150 rpm (regardless of the cause), or on failure of the cranking motors to disconnect when the unit is running.

8.3.1.1.7.1.9 Surveillance. Surveillance instrumentation is provided to monitor the status of the standby diesel generating system. Provisions for surveillance are an essential requirement in the design, manufacturing, installation, testing, operation, and maintenance of the diesel generators. Such surveillance not only provides continuous monitoring of the status of the standby diesel generating system, so as to indicate readiness to perform intended functions, but also serves to facilitate testing and maintenance of the equipment. Periodic surveillance procedures are also implemented to check setpoints of protective relays to ensure a reliable operation. Annunciation is provided both locally (diesel generator control panels) and in the main control room. Table 8.3-5 indicates the annunciation furnished for the Divisions 1 and 2 diesel generating systems.

When operating in the standby mode, conditions rendering the diesel generating units incapable of responding to emergency start signals are intentionally limited, as indicated in Section 8.3.1.1.7.1.8. Table 8.3-5, items 1 through 7 (inclusive), indicates all conditions which render the units incapable of responding, including both diesel generating unit and distribution system problems. Local, disabling diesel generator incomplete sequence and differential current conditions are annunciated indirectly (and distinctly from any nondisabling alarms) via the unit lockout (item 6) and fail to start (item 9) alarms. Item 21 indicates that the unit has been started automatically on receipt of emergency start signals. The remaining items indicate nondisabling diesel generator problems which do not cause unit trip.

During test mode operation, an expanded set of disabling conditions are permitted to prevent unit start or initiate unit trip as indicated in Section 8.3.1.1.7.1.8. However, in the event of

receipt of emergency start signals while the units are in the test mode, those signals not permitted to disable the unit in the standby mode are eliminated from the trip circuitry. In the event of receipt of a LOCA signal when a diesel is parallel to an offsite source, the diesel generator breaker will trip. With the diesel generator disconnected from parallel operation with the offsite power system during test mode operation, the diesel generator can automatically provide acceptable voltage and frequency for subsequent unit operation within requirements set by Regulatory Guide 1.9, Revision 0 if called upon. The diesel will keep running until shutdown by operator action. The maintenance lockout key lock switch and the emergency stop lockout features are verified to prevent the diesel generator from starting only when required no less than once every 30 months.

Main control room annunciation is designed to permit the control room operator to accurately monitor the status of the standby diesel generating system at all times and during all modes of operation. Any condition which renders the diesel generators incapable of operation is annunciated via Table 8.3-5, Items 1 through 9. The difference between the standby mode and all other modes is that the number of unit tripping signals permitted to actually operate (via the unit lockout relay) is limited in the standby mode.

Diesel generating unit controls reset automatically (time delayed) following nonemergency manual stops initiated at the local control stations.

8.3.1.1.7.1.10 Instrumentation and Control Systems. Power supply source for the instrumentation and control systems for each diesel generator is independent in accordance with the divisional separation criteria detailed in Sections 8.3.1.4 and 8.3.2.4. Each diesel generator set includes the following instrumentation:

a. Voltmeter,
b. Ammeter,
c. Wattmeter,
d. Varmeter,
e. Field ammeter,
f. Annunciator panel,
g. Synchroscope, synchronizing switches and lights,
h. Frequency meter,
i. Elapsed time meter,
j. Generator breaker status lights, and
k. Bus-tie breaker status lights.

The diesel generator sets are capable of being started or stopped manually from the main control room or from local control panels, and all Class 1E instrumentation is capable of being monitored both in the main control room and locally.

8.3.1.1.7.1.11 Light or No Load Operation. Light loading of the diesel generators for extended periods may lead to accumulation of oil in the exhaust system and create a potential for fire which could damage the turbo-charger and exhaust system. The HPCS diesel generator (3) when started will be loaded, except when offsite power is available as described in Section 8.3.1.1.7.2.7. The diesel generators (units 1 and 2) start when offsite power is not available to the Class 1E 4.16-kV switchgear buses or when LOCA signal is received. Partial LOOP does not cause connection of a diesel generator onto its 4.16-kV switchgear bus. Once offsite power to the bus is reestablished via transfer to a remaining offsite source, closure of the diesel generator breaker is blocked. In such a case, the units run unloaded. Also, during testing and maintenance/repairs, periods of unloaded operation are also expected to occur.

The Divisions 1 and 2 diesel generating units are capable of running for 4 hr in the unloaded or lightly loaded condition at rated speed. Operating restrictions are employed to avoid the potential for fire if the diesels are run for more than 4 hr at less than 50% loading at rated speed. After 4 hr of loading at less than 50% the engines are run for a minimum of 30 minutes at greater than 50% loading before being shut down. The engines may be run unloaded at idle speed for extended periods.

8.3.1.1.7.2 High-Pressure Core Spray (Division 3) Standby Alternating Current Power Supply.

8.3.1.1.7.2.1 General. The single drive HPCS standby diesel generator is used to supply power to the HPCS system in the absence of the normal/startup power sources. Figure 8.1-2 shows the interconnections between the preferred power system, the HPCS diesel generator unit, and the HPCS pump and 225-kVA auxiliary transformer. The HPCS auxiliary loads appear in Figure 8.3-4.

The HPCS system is self-contained except for connection to LOCA start signals and for access to the preferred source of offsite power through the plant ac power distribution system. It is operable as an isolated system independent of electrical connection to any other system through its use of the dedicated HPCS diesel generator. The standby auxiliary equipment such as heaters, air compressor, and battery charger are supplied from the same power source as the HPCS motor when the diesel generator is not running.

The HPCS diesel generator has the capability to quickly restore onsite power to the HPCS pump motor in the event offsite power is unavailable and to provide all required power for the startup and operation of the HPCS pump motor in a manner compatible with safe shutdown of the plant. The HPCS diesel generator starts automatically on a signal from the plant protection system; the unit is both started and connected to the bus automatically upon receipt of a bus undervoltage signal. The failure of this unit does not negate the capability of other power sources.

The HPCS diesel generator may also be cross connected to either Division 1 or to Division 2. These cross connects are only allowed under the following two scenarios:

(1) Extended Station Blackout (ESBO): A station blackout that may extend beyond the analyzed 4 hour coping time in which adequate core cooling can be assured without continuous HPCS system operation. (Reference 8.3-6).

(2) Non-Design Basis Accident (DBA) LOOP: A LOOP in which adequate core cooling can be assured without continuous HPCS system operation.

Under these conditions, the HPCS diesel generator may be used to energize selected Division 1 or Division 2 equipment by back-feeding from the HPCS bus to the Division 1 or Division 2 buses. The HPCS diesel generator does not have sufficient capacity to assume all the Division 1 or 2 ESBO or non-DBA LOOP loads. However, the HPCS diesel generator can energize selected loads during an ESBO or non-DBA LOOP. The cross connect breakers are not normally installed in their associated switchgear cubicle.

8.3.1.1.7.2.2 Unit Rating and Capability. The diesel generator set for Division 3 (HPCS) has a continuous service rating of 2600 kW. Diesel generator set short-term ratings are 2850 kW for 2000 hr and 3026 kW for 30 minutes. The generator is rated 3560 kVA at 0.8 pf, which is sufficient to carry the 2850 kW short-term rating at 0.8 pf. At higher kW outputs, the diesel generator set would have to operate at a higher power factor.

The generator is rated to have sufficient capacity to start and supply the HPCS induction motor for the HPCS pump and (via stepdown auxiliary transformer) 460-V induction motors which drive the engine cooling water pump, valve operator motors, and miscellaneous HPCS auxiliaries. The valve motors operate for short times and do not impose a significant load on the generator. The HPCS pump motor has a nameplate rating of 3000 hp at 4000-V. Table 8.3-3 lists the principal loads on Division 3 (HPCS). The diesel generator unit has the capacity to start and supply the loads required by the HPCS system within the time requirements described in Chapter 6. Table 8.3-3 lists the sequence of starting loads for the HPCS system.

The size of the diesel generator serving Division 3 (HPCS) satisfies the requirements of Regulatory Guide 1.9, Revision 0, except for voltage and frequency limitations, and conforms to the following criteria:

a. The (2000 hr/year) nameplate rating of the unit exceeds the maximum required load indicated in Table 8.3-3 under rated conditions. Engine brake horsepower

required to supply calculated steady state load is within the diesel engine's 2000-hr/year rated capability with an air inlet temperature of 115°F;

b. The unit is capable of starting, accelerating, and running its largest motor at any time;

c. The unit is capable of reaching full speed and voltage within 15 sec after receiving a signal to start, and can be fully loaded within 30 sec following the start signal; and

d. The unit demonstrates a torque margin in excess of the starting period requirements.

See Section 8.3.1.2.1.4 for a discussion of the nonconformance to Regulatory Guide 1.9, Revision 0, voltage and frequency limitations.

The governor control system includes manual engine idle capability. Manually operating the engine at a reduced speed for a "warm up" or a "cool down" run prior to shutdown is recommended by the manufacturer to minimize mechanical stress and wear. If a HPCS auto initiation or E-SM-4 undervoltage signal is received when operating the engine at reduced rpm (idle speed), manual control is automatically bypassed and the engine is accelerated to rated speed.

The HPCS power system electrical apparatus is sized on the basis of the most severe conditions it will be subject to in either a continuous or intermittent basis in any mode of operation. Intermittent loads are factored in on the basis of heating (e.g., short time peaks are not added directly to determine total continuous load imposed). Adverse environmental conditions have been taken into consideration (e.g., derating of cable for temperatures higher than the basic rated values and use of multipliers on actual service hours for motors operated at higher than normal rated temperatures).

8.3.1.1.7.2.3 Cooling Water System. The HPCS diesel engine is provided with a closed cooling system containing immersion heaters to maintain the engine coolant temperature, an expansion tank, a temperature regulating valve, and a lube oil cooler. The immersion heater is thermostatically controlled and, in conjunction with the temperature regulating valve, will maintain the jacket water at a steady temperature. During engine shutdown condition, jacket water heated by the immersion heater will circulate through the lube oil cooler by thermosyphon action to warm the lubricating oil circulated by an ac motor-driven pump. This "keep warm" feature will provide the engine with the capability of quick start and load acceptance after a shut down. The engine low temperature condition will be annunciated in the main control room. See Section 9.5.5 for additional details of the cooling water system.

8.3.1.1.7.2.4 Lubrication System. The lubricating oil system schematic is shown in Figure 9.5-6. The lube oil system is provided with a suction-strainer full-flow filter with bypass relief valves, a lube oil cooler/heater, and a lube oil sump pan of sufficient capacity to

hold usable lube oil for 7 days operating without adding makeup lube oil. High crankcase pressure is annunciated for operator action. See Section 9.5.7 for additional details of the lubrication system.

8.3.1.1.7.2.5 Air Starting System. The air starting system is shown in Figure 9.5-1. To ensure positive starting, both solenoids are energized simultaneously and both banks of dual starting motors crank the engine. The air supply system contains two receivers. One of the air compressors is electric-motor driven and the other is diesel-engine driven. The motor-driven air compressor is powered from MCC MC-6B. Running either air compressor will charge both receivers.

The volume of the receiver allows sufficient time for moisture and oil to precipitate in the bottom of the tank. The connection to the engine start system is located far enough above the bottom so that the moisture in the bottom will not get carried in the air being supplied to the air start motors. Blowdown valves are provided in the bottom of the air receivers to drain any moisture that might have collected in the bottom. The blowdown valves are opened periodically on a maintenance schedule to blow moisture out of the tank.

Wye strainers are provided in the air start system piping to filter any particulate carryover. Inspection and cleaning of the system components were made after the initial trail runs during installation. After the initial trial runs, all loose particles were either collected or blown out. As an extra precaution against moisture carryover, a dryer was added between the air compressors and air receivers.

See Section 9.5.6 for additional details of the air starting system.

8.3.1.1.7.2.6 Fuel Oil System. The fuel oil system consists of two fuel oil systems external to the engine fuel manifolds, either of which is capable of supplying fuel oil to the engine. One of the fuel oil pumps is mechanically driven by the engine, and the other by a 120-V dc motor. The systems contain the following components from the day tank: fuel supply lines, strainers, fuel oil pumps, duplex filters, relief and check valves. The two systems join together at the manifold for the duplex filter of the engine driven fuel oil pump and share that duplex filter, a pressure gage, fuel lines and manifolds to the injectors, injectors, and a return line to the day tank.

See Section 9.5.4 for additional details of the fuel oil system.

8.3.1.1.7.2.7 Automatic Starting and Loading System. In the event of loss of offsite sources of power to the onsite power system, the HPCS diesel generator set is automatically started and loaded by controls and circuitry which are independent of those used to start and load the Divisions 1 and 2 units. Control power for the diesel generator unit is supplied from its own 125-V dc system which consists of a battery with its own battery charger (see Section 8.3.2.1.2).

The diesel generator starting logic and starting signals (shown in Figures 8.3-23 and 8.3-24) are described as follows:

a. The diesel generator starts immediately upon receipt of LOCA signals (reactor low water level and/or high drywell pressure);

b. Upon sustained loss of bus SM-4 voltage the bus is automatically isolated from the upstream non-Class 1E system, and the diesel generator started;

c. After the diesel generator has attained approximately normal frequency, its breaker automatically closes (if unit start was initiated by bus SM-4 undervoltage), picking up loads as indicated in Table 8.3-3. LOCA signals do not initiate automatic breaker closure;

d. Diesel generator capacity (2850 kW) is such that the unit is capable of supplying the entire Division 3 load per the load schedule shown in Table 8.3-3 on a 2000-hr/year basis. There is no load shedding in Division 3;

e. If offsite power is still present and the unit is started by a LOCA signal, the diesel generator breaker will not close. However, the unit will continue to run at rated frequency and voltage until manually shut down; and

f. Means are provided for periodic exercising of the diesel generator under load. To accomplish this, supply of 4.16-kV Class 1E bus SM-4 is transferred to the startup source. Under this condition, the diesel generator is synchronized to the 230-kV startup source and loaded via manual adjustment of the unit speed controls. Administrative procedures are used to prevent paralleling of the diesel generator with the normal auxiliary transformer so that the short circuit capability of the switchgear is not exceeded.

Means are also provided to periodically test the entire chain of HPCS system elements from sensing devices through driven equipment to ensure that equipment is functioning in accordance with design requirements. The drawout feature of protective relays allows a replacement relay to be installed while the relay that was removed can be bench tested and calibrated. Startup of the diesel generator can be effected by simulation of signals for LOCA or bus SM-4 undervoltage.

8.3.1.1.7.2.8 Protective Trips. The HPCS diesel generator protection system is designed such that on accident signal (low reactor water level, high drywell pressure) only the following diesel generator trips are effective:

a. Engine overspeed,
b. Generator differential relay action,

c. Incomplete sequence, and
d. Emergency stop push button.

The trips are annunciated in the main control room. Other normal protective relays and devices such as loss of excitation, antimotoring (reverse power), overcurrent (with voltage restraint), high jacket water temperature, high crankcase pressure, and low lube oil pressures are used to protect the machine when it is operating during periodic tests. These relays are automatically blocked from the tripping circuits under accident conditions.

In addition to these protective relays, a normal time delay overcurrent relay senses a generator overload and causes an alarm in the main control room. The generator differential relays and overspeed trip device are retained under emergency conditions to protect against what could be major faults which would cause immediate system failure and major damage. All the necessary bypassed trip devices alarm in the control room and provide the operator with sufficient information to take the necessary corrective action. Since the diesel generator is performing a safety-related core cooling function during accident conditions, these trip devices cannot be permitted to interrupt the diesel generator's operation. The capability of the diesel to operate under these abnormal conditions is left to the operator.

During a synchronizing test, the diesel generator is protected from overcurrent resulting from non-Class 1E loads connected to the upstream buses, in the event of a loss of startup transformer power. The overcurrent protection results in the tripping of the offsite source breaker without tripping the generator breaker.

8.3.1.1.7.2.9 Surveillance. Surveillance instrumentation is provided to monitor the status of the standby diesel generating system. Provisions for surveillance are an essential requirement in the design, manufacture, installation, testing, and maintenance of the diesel generator. Such surveillance not only provides continuous monitoring of the status of the standby diesel generating system, so as to indicate readiness to perform intended functions, but also serves to facilitate testing and maintenance of the equipment. Protective surveillance procedures are also implemented to check setpoints of protective relays to ensure a reliable operation. Annunciation is provided both locally (diesel generator panel) and in the main control room.

An alarm "HPCS not ready for auto start," which operates during one of the following conditions, is provided in the control room.

a. Voltage regulator not in auto position,
b. Engine generator lockout operated,
c. Engine in maintenance position,
d. Diesel generator breaker racked out, and
e. HPCS pump motor breaker racked out.

In addition, the following alarms in the control room pertaining to the diesel generator aid the operator in determining the status of the unit.

a. Diesel engine in maintenance or test position,
b. Generator trip lockout,
c. 125-V dc power failure,
d. Diesel engine overspeed,
e. Diesel engine running, and
f. Diesel generator local panel alarm.

The diesel generator local panel alarm indicated above is actuated by any one of the following alarms (which are annunciated locally in the diesel generator panel).

a. Low lube oil pressure,
b. High lube oil temperature,
c. Low air pressure,
d. Overspeed trip,
e. Low jacket water temperature,
f. High jacket water temperature,
g. Low water pressure,
h. Unit lockout,
i. Blown fuse,
j. Lube oil relief valve open (lube oil system fault),
k. Fuel system fault,
l. Fail to start,
m. Fail to run,
n. Not ready for auto start,
o. Engine running,
p. Charger input power failure,
q. Generator RTD high temperature,
r. Low lube oil temperature,
s. Low circulating lube oil pressure,
t. High crankcase pressure,
u. Low water level, and
v. Low lube oil sump level.

When the engine selector switch is in the “local manual” position, the air compressor switch is in the “not in auto” position, or the voltage regulator switch is in the “off” position, the engine will not be prevented from starting automatically.

A manual stop signal does not prevent the engine from starting in the automatic mode; however, the emergency manual stop signal prevents the engine from starting unless reset. In this case, it is annunciated in the control room as “HPCS not ready for automatic start.”

8.3.1.1.7.2.10 Instrumentation and Control System. The power supply source for Division 3 controls and instrumentation is independent of the power sources for controls and instrumentation of other divisions, in accordance with the separation criteria described in Sections 8.3.1.4 and 8.3.2.4.

The diesel generator set includes the following instrumentation:

a. Voltmeter,
b. Ammeter,
c. Wattmeter,
d. Watthour meter,
e. Varmeter,
f. Field voltmeter,
g. Field ammeter,
h. Synchroscope, synchronizing switches and lights,
i. Frequency meter, and
j. Generator breaker status lights.

See Figure 8.1-2 for protection and surveillance devices for the HPCS power system. Some control and monitoring instruments are located on the diesel generator skid and have been qualified for engine vibration.

Additional information is provided in Section 7.3.1.1.1.1.

8.3.1.1.7.2.11 Light Load Operation. Light load operating capability of the HPCS (Division 3) diesel generating unit, and administratively controlled operating procedures for this operating mode, are identical to those described for the Divisions 1 and 2 diesel generating units. See Section 8.3.1.1.7.1.11.

8.3.1.1.8 Electrical Equipment Tests

Components of the onsite ac power system are factory tested in accordance with industry and manufacturer's standards. For Seismic Category I components, the manufacturer submits dynamic tests, analysis, or combination of both which substantiate the ability of the equipment to function under safe shutdown earthquake (SSE) loads (see Section 3.10). Tests and inspection of the onsite ac power system are discussed further in Section 8.3.1.2.2.

The standby diesel generators for Divisions 1 and 2 are of a type not previously used nor qualified for standby power service at a nuclear plant. Therefore, the diesel generators were shop tested to demonstrate starting reliability. The starting test requirements included the following:

a. Shop tests which confirmed a starting reliability of 0.99 with a confidence level of 0.95. One of the diesel generators was started 300 times with a failure rate not in excess of one per 100 starts;

b. Bringing the set to full speed and voltage automatically within 15 sec;

c. Loading of the generator to at least 95% of continuous rating in four steps at 5 sec intervals immediately after each successful start and maintaining this load until thermal equilibrium is attained;

d. 90% "cold" starts and 10% "hot" starts; and

e. Monitoring of operating conditions throughout the duration of test with significant parameters such as voltage frequency, operating temperature, acceleration times, and other pertinent functions being recorded.

Failures considered were limited to those caused by malfunctions of the diesel generator set only. Failures caused by malfunctions in the test equipment, external circuitry, or loads were not considered attributable to the reliability of the diesel generator set. Provisions were made in the testing procedure to determine the cause of any malfunction or excess wear and to classify it as a valid failure of the equipment being tested or an external nonvalid failure. Such determination of cause and classification of failure or excess wear was fully supported by documentation. At the completion of the tests, a thorough inspection was performed on the diesel generator unit.

A prototype test was made for the standby diesel generator selected for Division 3 (HPCS) to establish the adequacy of the diesel generator unit to successfully accelerate the bulk HPCS pump loads. The test consisted of starting the actual HPCS pump motor depicting as closely as possible the actual HPCS pump loop (HPCS system in condensate to condensate test mode) and auxiliary loads. A topical report on HPCS power system unit (NEDO-10905-3) describes and shows theoretical and experimental evidence as to the adequacy of the design.

8.3.1.1.9 Equipment Criteria

8.3.1.1.9.1 Motor Size. The criterion for Class 1E motor size is that the safety-related motor develop sufficient horsepower to drive the mechanical load under runout or maximum expected flow and pressure, whichever is greater. Class 1E motors are sized in accordance with NEMA standards and manufacturers ratings to be at least large enough to produce the starting, pull-up, and breakdown torque calculated to be needed for the particular application, and to permit the driven equipment to develop its specified capacity without exceeding the temperature rise rating of the motor when operated at the duty cycle of the driven equipment.

Motors are initially tested in accordance with NEMA-MG-1.

The motor and the associated driven equipment are preoperationally tested to verify that the system requirements are met.

8.3.1.1.9.2 Motor Thermal Overloads. Motor thermal overloads for miscellaneous Class 1E motors having a 1.0 or 1.15 service factor are selected from manufacturer's table for 1.15 service factor motors. Overloads so selected give 125% of motor full load current protection.

Motor thermal overloads for Class 1E MOVs are selected two sizes larger than the normally selected thermal overload (this approximates 140% of motor FLA). Selection of overloads in this range permits Class 1E MOVs to operate for extended periods of time at moderate overloads; tripping occurs just prior to motor damage. Class 1E MCCs are located in environmentally controlled rooms such that overload ambient temperature variation is not a significant factor. Periodic surveillance procedures are provided to check setpoint drift of the thermal overload devices.

8.3.1.1.9.3 Minimum Voltage. In general, Class 1E motors are designed to start and run at full load with a minimum 80% of rated voltage at the motor terminals. Deviation from the 80% voltage requirement is permitted provided an analysis is performed and documented to demonstrate that the motor can perform its safety function with the minimum voltage supplied.

The HPCS pump motor is designed to accelerate its load with only 75% voltage applied to the motor terminals.

8.3.1.1.9.4 Motor Starting Torque. Class 1E motors are designed for full voltage starting and to be capable of accelerating the driven equipment to its required speed without exceeding the thermal capability of the motor under all expected conditions of ambient temperature, voltage, and frequency.

8.3.1.1.9.5 Minimum Torque. The minimum motor torque through the accelerating period, for Class 1E motors, is based on the following criteria:

a. The brake horsepower does not exceed the guaranteed motor rating over the entire range of the driven equipment, and

b. The driven equipment is capable of attaining required speed under normal voltage conditions within 5 sec and under degraded voltage conditions within 8 sec.

In general, motors are sized such that no portion of a motor's service factor above 1.0 is used in continuous operation of the motor. Specified minimum values of motor torque over equipment torque are, therefore, not required.

For the HPCS pump motor, the minimum difference between the motor torque and the pump torque at any given speed during acceleration is 10% of motor rated torque.

8.3.1.1.9.6 Motor Insulation. The criteria for determining insulation for Class 1E motors are as follows:

a. The insulation for continuous rated motors has a 40-year life expectancy for the duty cycle and the ambient conditions of temperature and radiation at which they are required to operate. Intermittent duty motors are similarly rated for the number of duty cycles expected over the 40-year life of the plant; and

b. For Class 1E motors, which are required to operate during or subsequent to accidents, insulation is provided to withstand the expected environmental conditions of ambient pressure, temperature, and radiation dosage.

All motors are provided with either class B, F, or H insulation. The insulation temperature ratings are greater than the sum of the motor temperature rise, the ambient temperature at the motor location, and the hot spot temperature allowance.

During the license renewal review, the service life of the HPCS system components that provide an intended function for license renewal were evaluated for 60 years.

8.3.1.1.9.7 Temperature Monitoring Devices. Motors 300 hp in size and larger are provided with one or more copper-constantan thermocouples in each bearing.

The HPCS, low-pressure core spray (LPCS), residual heat removal (RHR), and standby service water pump motors are provided with six single element copper-constantan thermocouples imbedded in stator windings, two per phase, where the highest operating temperatures are expected.

The output from the thermocouples is wired to the station computer for scanning and alarm in the main control room.

8.3.1.1.9.8 Interrupting Capacity. Class 1E switchgear, load centers, control centers, and distribution panels are sized for interrupting capacity based on maximum short circuit availability at their location. Switchgear is applied within its interrupting close and latch ratings in accordance with ANSI C37.010-1972, Application Guide for Alternating Current High Voltage Circuit Breakers.

The calculations to document this application take into account the fault contributions of all rotating machines and source transformers and make proper allowance for system X/R ratio at the point of fault. Transformer impedance is selected to limit short circuit currents at 4.16-kV switchgear. Low voltage metal enclosed breakers at load centers and molded-case breakers at MCCs are adequately sized for the maximum available short circuit currents.

8.3.1.1.9.9 Electric Circuit Protection. Equipment and settings are provided to carry out relaying as listed below. The basic coordination for the 4.16-kV and 480-V systems for Class 1E buses is as follows:

a. A faulted piece of equipment is cleared by isolating the smallest possible portion of the system;

b. A faulted piece of equipment is cleared as quickly as possible to minimize damage to that equipment and the effects on the remainder of the system; and

c. In the event that the primary protective device fails to clear the fault, a backup device operates to clear it after a suitable coordination interval. Operation of a backup device usually results in deenergizing a larger portion of this system than the operation of a primary device.

The one line diagrams, Figure 8.1-2 shows the relay protection schemes.

The incoming supply feeders are included in the differential zone of the normal auxiliary, startup, and backup transformers; hence the primary protection for these feeders consists of harmonically restrained differential relays. The overcurrent relays on the incoming supply breaker are coordinated with the maximum feeder setting on the bus.

The 6.9-kV and 4.16-kV systems are high resistance grounded to minimize damages by limiting ground fault currents to 12.5 amps (maximum). An overcurrent relay is connected to a current transformer in the neutral of the resistance grounded, wye-connected secondary of the supply transformer for ground indication, and each feeder is equipped with a ground sensor.

The 480-V system is also high resistance grounded to limit ground fault currents to 10 amps (maximum). Ground faults are detected at all diesel generator neutrals, transformer secondary neutrals, or 480-V switchgear feeders.

Circuit protection of the NSSS vendor supplied HPCS bus is coordinated with the design of the overall protection system for the plant auxiliary system. Simplicity in load grouping is employed to achieve simplicity in conventional protective relaying practice for isolation of fault. There is no load shedding or sequencing in the HPCS power system. Emphasis is given in preserving function and limiting loss of Class 1E equipment function in situations of power loss and equipment failure. Normal overload relays for HPCS pump motor and diesel generator give alarm indication only. Faults are isolated by instantaneous relaying.

8.3.1.1.9.10 4.16-kV Motor Feeder. Each Class 1E 4.16-kV motor feeder is protected by two relays, each having a long time overcurrent unit, a high dropout instantaneous unit, and an indicating instantaneous trip unit. The relays are set to provide: (1) an overload alarm at

114% to 160% of the motor nameplate full load current, (2) a breaker trip on locked rotor current within the safe stall time of the motor, and (3) an instantaneous trip of the breaker for short circuit currents above the motor locked rotor current including adjustments for DC offset and voltage variation. The motor relays are coordinated with the three sets of incoming bus breaker time overcurrent relays. Ground fault indication is provided by a ground sensor relay activated by a doughnut current transformer. The 4.16-kV HPCS pump motor feeder is also tripped on motor feeder over frequency.

8.3.1.1.9.11 Transformer Feeders. Each 480-V load center unit substation or MCC transformer feeder on the 4.16-kV buses has two time overcurrent relays with instantaneous overcurrent elements or high speed transformer differential protection for fault protection. These relays are coordinated with the maximum protective device settings on the 480-V Class 1E equipment buses fed by the transformers. Ground fault indication is provided by the ground sensor system.

8.3.1.1.9.12 Diesel Generator. The primary protection for the diesel generator connected to each 4.16-kV Class 1E bus consists of differential relaying and overspeed trip (see Sections 8.3.1.1.7.1.8 and 8.3.1.1.7.2.8).

8.3.1.1.9.13 480-Volt Motor Feeder Fed From Switchgear Bus. The overcurrent fault protection on each 480-V motor feeder is a low-voltage power circuit breaker, containing a solid state trip device with adjustable long time delay and instantaneous trips. Ground sensors provide ground fault detection.

8.3.1.1.9.14 Motor Control Center Feeder Fed From 480-Volt Switchgear Bus. The overcurrent fault protection for each 480-V MCC feeder (except HPCS MCC MC-4A) is a low voltage power circuit breaker with a solid state trip device having both adjustable long time and adjustable short time trips. The long time device is coordinated with the maximum overload device setting in the MCC. The short time device is coordinated with the maximum instantaneous device setting in the MCC. Motor control center MC-4A is protected by the 4.16-kV feeder circuit breaker. Ground sensors provide ground fault detection.

8.3.1.1.9.15 Feeders From 480-Volt Motor Control Centers. Motors fed from the 480-V MCCs are generally 100 hp or less. Circuit protection, which includes molded-case circuit breakers or dual element time delay fuses, is provided for high interrupting capacity and short circuit protection. Motor running overcurrent protection is provided by overload relays in each motor starter. Non motor MCC loads are generally provided short circuit and overload protection by dual element time delay fuses. Subfeeders to other MCCs are provided short circuit and overload protection by molded-case circuit breakers or dual element time delay fuses.

8.3.1.1.9.16 Electrical Penetration Assemblies in Containment Structures. CGS design is in compliance with Regulatory Guide 1.63, Revision 0. All circuits which enter penetrations and

are subject to I^2T heating due to fault currents are provided with two protective devices (primary and backup). In the event the primary protective devices fail to clear faults, the backup protective devices are designed to limit the I^2T levels experienced by the penetration conductors to values below the conductor I^2T ratings.

Electrical Calculation E/I-02-93-04 presents an analysis of overcurrent protection of primary containment electrical penetrations.

8.3.1.1.9.17 Raceway Systems. The cable tray system utilizes open ladder type trays, with the exception of RPS and instrumentation trays which are totally enclosed type (see Figures 8.3-25 through 8.3-30 and Figures 8.3-33 through 8.3-38). Cable trays are constructed of galvanized steel, except for aluminum cable trays installed in and adjacent to the building for the non-Class 1E reactor recirculation pump ASD.

All conduit, except for conduits for lighting, communication, security, and fire detection systems which may utilize EMT thinwall, are full weight rigid galvanized steel. Sleeves also utilize full weight conduit.

Conduit and sleeve fill is generally in accordance with National Electric Code criteria.

Flexible metallic conduit is utilized for final connections to vibrating or rotating equipment, cabling within the area below the reactor pressure vessel, cabling within the power generation control room complex (PGCC) periphery, cabling for fail safe, fire protection, and control/utility power circuits within the PGCC, short extensions of rigid conduit which require numerous direction changes, short connections between cable tray and panels or devices, and between different structures or buildings which experience differential movement.

8.3.1.1.9.18 Grounding Requirements. The design criteria for grounding are

a. Equipment hardware, exposed surfaces, and potential induced voltage hazards are adequately grounded to ensure that no danger exists for plant personnel;

b. A high resistance ground return path is provided to facilitate the operation of ground fault detection devices in the event of ground fault or insulation failure on any electrical load or current. Ground fault currents are thereby limited to 12.5 amps (maximum) in the 6.9-kV and 4.16-kV systems, and to 10 amps (maximum) in the 480-V system. The 120/208-V system is solidly grounded; and

c. A separate and independent grounding system for instruments and instrument wire shield is provided.

The design basis for grounding requirements is

a. All major electrical equipment is connected directly to the grounding grid by cable ties. A fault current return path is provided for 6.9-kV and 4.16-kV switchgear, 480-V switchgear, MCCs, and other equipment. This fault return path consists of bare #4/0 copper cables installed on all power cable trays, in duct banks and in loops along the building walls. Motors and electrical equipment operating at 150 V (to ground) and above, or carrying currents of 60 amps or more, have direct cable or strap connections to the ground grid. Alternately, the #4/0 AWG grounding cable alongside the trays may be tapped for grounding motors, panels and other equipment, if the distance is not greater than from the grounding loop indicated on contract drawings, and the equipment does not require larger cable than #4/0. Motors and electrical equipment operating at less than 150 V (to ground) or carrying currents less than 60 amps are grounded via the connecting conduit system and the ground cable in trays;

b. The cable trays are solidly grounded to the station grounding grid or building steel work. Electrical connections between individual tray sections are made by mechanical connector plates. In addition, a bare ground cable is attached to trays supporting power cables and to flexible conduits external to the PGCC. All flexible conduits containing fail-safe circuits which are routed in the PGCC modular floor are grounded;

c. The station ground grid is routed into primary containment via two penetrations suitable for the purpose; and

d. The station grounding grid is designed to maintain the station area at an effective ground potential during a worst-case ground fault of any installed electrical equipment, including transmission facilities and unit main generator, as well as lightning effects. An effective ground is considered to be the maintenance of voltage potentials below "safe touch-and-step potential" levels for plant personnel.

8.3.1.1.9.19 Vital Inverter Instrumentation Power System Protection Requirements.

The design of the 120/240VAC Class 1E inverter, static switch and alternate power supply to the vital instrument buses E-PP-7AA and E-PP-8AA as shown in Figure 8.3-5.1 is in compliance with IEEE 308-1974.

8.3.1.1.10 Class 1E Electrical Equipment Arrangement

The Class 1E electrical equipment arrangement for major components of the three separate power divisions is shown in Figures 1.2-14 and 1.2-22.

8.3.1.2 Analysis

8.3.1.2.1 Compliance to Criteria

8.3.1.2.1.1 General. Compliance with General Design Criterion (GDC) 17 is ensured for the onsite power systems by having sufficient independence, redundancy, and testability to perform the required safety functions assuming a single failure. Independence is discussed in Section 8.3.1.4 and testability is covered in Section 8.3.1.2.2. Redundancy in the onsite auxiliary ac power system is provided via the formation of redundant safety-related (Class 1E) electrical load groups (Divisions 1 and 2) in conformance with GDC 17, IEEE308-1974, and Regulatory Guide 1.6, Revision 0. This redundancy extends from the onsite standby power sources through 4.16-kV buses, station service transformers, 480-V buses, MCCs, distribution cables, switchgear, and protective devices.

The Division 3 power system is a separate and independent safety-related (Class 1E) power system serving the HPCS system. The Division 3 power system may be connected to either Division 1 or Division 2 in conformance with GDC 17, IEEE 308-1974, and Regulatory Guide 1.6, Revision 0 as described in Section 8.3.1.1.7.2.1.

The DG3 cross connect is in compliance with GDC 17 in that no single failure can inhibit the design independence, redundancy, and testing features. This is ensured by the multiple breakers that separate the divisions within the non-safety related switchgear. The DG3 cross connect decreases the probability of losing power to plant power systems due to the defense in depth features that it provides.

The DG3 cross connect is in compliance with IEEE 308-1974 since the cross connect is performed manually and the breaker positions are administratively controlled.

The DG3 cross connect is in compliance with Regulatory Guide 1.6, Revision 0 as explained in Section 8.3.1.2.1.4.

No essential electrical component of one Class 1E electrical division is dependent for its emergency power supply on electrical equipment or devices which are common to the power supply of another division. The onsite auxiliary ac power system standby sources consist of three diesel generator sets. Each of the diesel generators feeds one of the Class 1E divisions. The onsite auxiliary power system redundancy is based on the capability of either of the two redundant (Divisions 1 and 2) onsite power sources and their associated load groups, in conjunction with the Division 3 onsite power source and associated load group, to bring the reactor to a safe cold shutdown condition and/or to mitigate the consequences of a DBA.

The electrical separation and independence of redundant (Divisions 1 and 2) portions of the safety-related auxiliary power systems conform to IEEE 308-1974, GDC 17 and Regulatory Guide 1.6, Revision 0, except that these diesel generators have tandem diesel engines.

Reliability equivalent to a single diesel engine generator set is achieved, as shown by prototype testing (see Section 8.3.1.1.8).

The 4.16-kV Class 1E buses (SM-7, 8, and 4 respectively) for Divisions 1, 2, and 3 are normally supplied from separate 4.16-kV non-Class 1E buses (SM-1, 3, and 2 respectively) as indicated in Figure 8.1-2. Class 1E circuit breakers which automatically open on a LOOP are provided on the 4.16-kV tie lines between the Class 1E and non-Class 1E buses.

As protection against failures of the redundant standby ac power sources due to a single event, there are no electrical interconnections between the circuits needed to start, load, and maintain operation of each standby diesel generator.

All principal power circuits have both overload and short circuit protection provided by protective relays circuit breakers or by fuses.

Physical separation is provided between the independent electrical divisions as described in Section 8.3.1.4.

Design of the onsite power systems is not in strict accordance with Regulatory Guide 1.75, Revision 0, since the CGS Construction Permit issue date precedes the regulatory guide issue date. However, CGS design does provide independence between equipment and circuits of redundant Class 1E electrical divisions and between Class 1E and non-Class 1E equipment and circuits where practicable in satisfaction of 10 CFR 50 requirements.

Non-Class 1E loads required to operate during a LOOP are connected to the Class 1E power supplies. These connections do not degrade the Class 1E power supplies, based on the following:

a. Connection of non-Class 1E loads to Class 1E power supplies is via Class 1E isolation devices. These devices are either a circuit breaker shunt tripped on LOCA or one or two overcurrent devices in series such as fuses or circuit breakers. The overcurrent devices trip on overload currents (except for 4-kV motor circuits), line-to-line and three-phase faults and line-to-ground faults for solidly grounded systems. All overcurrent devices trip on overloads with the exception of those used in 4-kV motor circuits;

   The power source shall supply the necessary fault current to ensure proper coordination of the circuit's Class 1E isolation device without loss of function of Class 1E loads;

b. Wiring to the non-Class 1E loads from the Class 1E power supplies are designated as prime circuits and are routed in accordance with the separation criteria of Section 8.3.1.4;

c. Periodic surveillance of isolation devices ensure maintenance of the trip setpoints within the limits for proper coordination with the main supply circuit protective devices; and

d. The Class 1E power supplies are adequately sized to handle all the Class 1E and non-Class 1E loads.

See Sections 8.3.1.3 and 8.3.2.3 for specific details of equipment and circuit identification for plant ac and dc systems respectively.

See Sections 8.3.1.4 and 8.3.2.4 for specific details of equipment and circuit separation for plant ac and dc systems respectively.

8.3.1.2.1.2 Reactor Protection System Power System. The RPS power system is not an ESF, component, or system. The system itself fails in a fail-safe mode. That is, it deenergizes and thus causes a shutdown action. In addition, redundant electrical protection devices are utilized for isolation as indicated in Section 8.3.1.1.6. However, design considerations are taken to ensure power supply availability commensurate with the needs of the equipment serviced by it. Redundancy of equipment ensures a high degree of availability.

8.3.1.2.1.3 Redundant (Division 1 and Division 2) Standby Alternating Current Power Supplies. On loss of normal and offsite sources of power to the 4.16-kV switchgear buses, the 4.16-kV Class 1E portion of the auxiliary ac power system is automatically isolated. All 4.0-kV motor and selected 460-V motor loads are automatically shed from their respective buses to allow for the sequential loading of the standby diesel generators (see Section 8.3.1.1.1).

The diesel generators start automatically and are automatically connected to the Class 1E 4.16-kV buses. Electrical loads necessary for an emergency reactor shutdown or shutdown in the event of a LOCA are automatically and sequentially reconnected to these safety-related buses. The automatic diesel starting and loading sequence is designed to provide power to ESF components required in the event of a DBA within the time period specified for their operation in Chapter 15.

The two diesel generators supplying power to Divisions 1 and 2 ESF components are sized and designed in accordance with Regulatory Guide 1.9, Revision 0. Their ratings are based on the 2000 hr/year load rating greater than the sum of the loads requiring power at any one time.

The sequencing of large loads at 5 sec (or more) intervals ensures that diesel generator voltage and frequency limits (80% and 95%, respectively) are maintained. Also, engine overspeed settings and other design parameters remain in accordance with Regulatory Guide 1.9, Revision 0, as discussed in Section 8.3.1.1.7.1.

The Divisions 1 and 2 portions of the onsite ac power system also satisfy Regulatory Guide 1.32, Revision 2, not only in their adherence to IEEE 308-1974, but also as follows:

a. Offsite power is available from either offsite source within a few seconds if the plant main generator source is lost,

b. Electrical and physical independence of standby power sources is in accordance with Regulatory Guide 1.6 as described in Section 8.3.1.1.7.1, and

c. The selection of the diesel generator capacities has been made in accordance with Regulatory Guide 1.9 as further described in Section 8.3.1.1.7.1.

8.3.1.2.1.4 High-Pressure Core Spray (Division 3) Standby Alternating Current Power Supply.

Compliance With GDC 17

The HPCS ac power supply is Class 1E and is designed with sufficient capacity and independence to ensure that core cooling, containment integrity, and other vital functions are maintained in the event of a postulated accident. The design of the onsite and offsite electrical power systems provides compatible independence and redundancy to ensure high availability of power supply to the ECCS, even assuming a single failure.

Electrical power from the transmission network to the HPCS bus SM-4 is provided via the 230-kV startup auxiliary transformer. A loss of normal voltage at 4.16-kV bus SM-4 results in automatic starting of the HPCS diesel generator, tripping of the normal supply breaker and closing of the generator breaker as described in Section 8.3.1.1.7.2.7.

Compliance With GDC 18

The auxiliary electrical system is designed to permit inspection and testing of all important areas and features, especially those that have a safety function and whose operation is not normally required. As described in the Technical Specifications, periodic component tests will be supplemented by extensive functional tests during the refueling outage, the latter based on simulation of actual accident conditions. These tests demonstrate the operability of diesel generator, battery system components, and logic systems and thereby verify the continuity of the systems and the operation of the components.

Because the diesel generator is a standby unit, readiness is of prime importance. Readiness is demonstrated by periodic testing. The testing program is designed to test the ability to start the HPCS loads as well as to run under load long enough to bring all components of the system into equilibrium conditions. This ensures that cooling and lubrication are adequate for

extended periods of operation. Full functional tests of the automatic control circuitry will be conducted on a periodic basis to demonstrate correct operation.

Conformance With Regulatory Guide 1.6, Revision 0

The HPCS diesel generator unit supplies power for the HPCS pump and its auxiliaries; failure of any single component of the HPCS diesel generator does not prevent the startup and operation of any other standby power supply and thus meets the requirements of Regulatory Guide 1.6, Revision 0.

The system conforms to Position 1 of the guide in that each Class 1E load is assigned to a division of the load groups. The assignment is determined by the nuclear safety functional redundancy of the load such that the loss of any one division of the load group does not prevent the minimum safety functions from being performed.

The system conforms to Position 2 of the guide in that the HPCS ac loads have a supply from the startup auxiliary transformer as the preferred (offsite) power source, as well as from the HPCS diesel generator as the standby (onsite) power source (see Figure 8.1-2).

The HPCS diesel generator breaker will close automatically if the normal source breaker to HPCS bus SM-4 is open and the diesel generator has reached rated frequency.

The system conforms to Position 3 of the guide in that there is no automatic connection of the HPCS system to any other load group.

The system conforms to Position 4 of the guide as follows:

a. The diesel generator connected to any division of a load group cannot be automatically paralleled with a diesel generator that is connected to another division of the load group;

b. Each of the diesel generators is connected to one independent division of load group. No means exist for automatically connecting different load groups with each other;

c. No means are provided for automatically transferring loads between the diesel generators; and

d. An exception is taken to Regulatory Guide 1.6, Position 4d as follows. As described in Section 8.3.1.1.7.2.1, the HPCS diesel generator may be manually cross connected to either Division 1 or Division 2. This is performed without an interlock as specified by Position 4, Item d. However, Generic Letter 91-11: Resolution of Generic Issues 48 clarifies this requirement by stating that “the

staff concludes that if proper administrative controls that provide assurance that these breakers are normally open are placed on the operation of the tie breakers, then the addition of interlocks need not be pursued."

To comply with the requirements of Position 5 of the guide, the following start and load reliability test as described in NEDO-10905-3 (Reference 8.3-1) was successfully performed.

a. A series of tests were conducted to establish the capability of a prototype HPCS diesel generator unit to consistently start and load within the required time;

b. The prototype diesel generator is of the same model as the unit used for CGS except for the generator. Comparative data shown in Table 8.3-6 indicates that the CGS generator is at least equivalent to the prototype unit;

c. The start and load reliability test satisfied the following requirements: A total of 69 valid start and loading tests with no failure or 128 valid start and loading tests with a single failure have been performed. The start and load test was conducted as follows:

1. Engine cranking was started on receipt of the start signal, and the diesel generator set accelerated to specified frequency and voltage within the required time interval;

2. Immediately following, the diesel generator set accepted a single step load consisting of the main HPCS pump motor load (fully loaded) or larger motor load (fully loaded) and additional loads (inductive and/or resistive) as required to total at least 100% of the continuous rating of the diesel generator unit;

3. At least 90% of these tests were performed with the diesel generator set initially at "warm standby," based on jacket water and lube oil temperatures at or below values recommended by the engine manufacturer. After load was applied, the diesel generator set continued to operate until jacket water and lube oil temperatures were within ±10°F (5.5°C) of the normal engine operating temperatures for the corresponding load; and

4. The other 10% of these tests were performed with the engine initially at normal operating temperature equilibrium (defined as jacket water and lube oil temperature within ±10°F (5.5°C) of normal operating temperatures as established by the engine manufacturer for the corresponding load).

If the cause for failure to start or accept load in accordance with the preceding sequence fell under any of the categories listed below, that particular test was disregarded, and the test sequence resumed without penalty following identification of the cause for the unsuccessful attempt.

1. Unsuccessful start attempts which can definitely be attributed to operator error including setting of alignment control switches, rheostats, potentiometers, or other adjustments that may have been changed inadvertently prior to that particular start test;

2. A starting and/or loading test performed for verification of a schedule maintenance procedure required during this series of tests. This maintenance procedure was defined prior to conducting the start and load acceptance qualification tests and then became part of the normal maintenance schedule after installation;

3. Failure of any of the temporary service systems such as dc power source, output circuit breaker, load, interconnecting piping, and any other temporary setup which was not part of the permanent installation; and

4. Failure to carry load which was definitely attributed to loadings in excess of required loading.

Conformance With Regulatory Guide 1.9, Revision 0

The HPCS system diesel generating unit conforms to the requirements of Regulatory Guide 1.9, Revision 0, with the exception of voltage and frequency limits, as described below.

The unit conforms to Position 2 of the guide in that the 2000-hr (2850-kW) and 90% of the 30-minute (2727-kW) ratings both exceed the maximum coincidental load indicated in Table 8.3-3. Intermittent loads such as MOVs are not considered for long-term loads.

The unit conforms to Position 3 of the guide in that the load requirements will be verified by preoperational tests. The HPCS diesel generator unit is considered as a justifiable departure from strict conformance to Position 4 of the guide regarding voltage and frequency limits during the initial loading transient. The HPCS system consists of one large pump and motor combination which represents more than 90% of the total load; consequently, limiting the momentary voltage drop to 25% and the momentary frequency drop to 5% would not significantly enhance the reliability of HPCS operation. To meet these regulatory guide requirements, a diesel generator unit approximately two to three times as large as that required to carry the continuous rated load would be necessary. However, the frequency and voltage overshoot requirements of Regulatory Guide 1.9, Revision 0, are met. A prototype testing

program on an installed unit, as described in Section 8.3.1.2.1.4, has verified the following functions:

a. System fast-start capabilities,

b. Load carrying capability,

c. Load rejection capability,

d. Ability of the system to accept and carry the required loads, and

e. The mechanical integrity of the diesel engine generator unit and all of the major system auxiliaries.

The design of the HPCS diesel generator conforms with the applicable sections of IEEE criteria for Class 1E Electrical Systems for Nuclear Power Generation Station, IEEE 308-1971.

The generator has the capability of providing power to start the required loads with operationally acceptable voltage and frequency recovery characteristics. A partial or complete load rejection will not cause the diesel engine to trip on overspeed.

Reference 8.3-1 describes the prototype and reliability test requirements.

The calculated HPCS diesel generator transient response is indicated in Figure 8.3-31. Reference 8.3-1 provides an analysis showing the conservatism of calculated response compared to that obtained from actual tests.

Conformance With Regulatory Guide 1.29

The HPCS power supply system is capable of performing its function when subjected to the effects of design bases natural phenomena at its location. In particular, it is designed in accordance with the Seismic Category I criteria and housed in a safety class structure.

Conformance With Regulatory Guide 1.32

The design of the HPCS diesel generator conforms with the applicable sections of IEEE criteria for Class 1E, Electrical Systems for Nuclear Power Generation Stations, IEEE 308-1971.

Conformance With Regulatory Guide 1.47

See Section 7.1.

Conformance With Regulatory Guide 1.62

Manual controls are provided to permit the operator to select the most suitable distribution path from the power supply to the load. An automatic start signal will override the test mode. Provision is made for control of the system from the control room as well as from an external location.

Conformance With IEEE 279-1971

See Section 7.3.2.1.2 for a discussion of compliance of the HPCS with IEEE 279-1971.

Conformance With IEEE 308-1971

The HPCS electrical system components supplying power to the Class 1E electrical equipment are designed to meet their functional requirements under the conditions produced by the design basis events. Equipment of different divisions is physically separated to maintain independence and to minimize the possibility of a common-mode failure. The HPCS Class 1E equipment is located in Seismic Category I structures.

Surveillance of the HPCS Class 1E electrical system is in compliance with the standard.

Conformance With IEEE 344-1971 and 1975

The HPCS power supply unit components are seismically qualified to IEEE 344-1971 or 1975 as applicable. See Section 3.10.1.2.

Conformance to IEEE 387-1972

The HPCS power supply unit is completely independent from other standby power supply units and meets the applicable requirements of IEEE 387-1972.

The HPCS diesel generator unit is designed to

a. Operate in its service environment during and after any design basis event without support from the preferred power supply;

b. Start, accelerate, and be loaded with the design load within an acceptable time:

1. From the normal standby condition,

2. With no cooling available, for a time equivalent to that required to bring the cooling equipment into service with energy from the diesel generator unit, and

3. On a restart with an initial engine temperature equal to the continuous rating, full load engine temperature;

c. Carry the design load for 2000 hr;

d. Maintain voltage and frequency within limits that will not degrade the performance of any of the loads composing the design load below their minimum requirements, including the duration of transients caused by load application or load removal; and

e. Withstand any anticipated vibration and overspeed conditions. There is no flywheel coupled with the HPCS diesel generator. The generator and exciter are designed to withstand 25% overspeed without damage.

The HPCS diesel generator has continuous and short-term ratings consistent with the requirements of Section 5.1 of IEEE 387-1972.

Mechanical and electrical system interactions between the HPCS diesel generator unit and other units of the standby power supply, the nuclear plant, the conventional plant, and the Class 1E electrical systems are coordinated so that the HPCS diesel generator units' design function and capability are realized for any design basis event except failure of the HPCS diesel generator unit.

Environmental qualification of the HPCS diesel generator is not required since it is located in a mild environment.

8.3.1.2.2 Tests and Inspection

The auxiliary ac power system is designed to permit periodic testing and inspection of the system as a whole and of the operability and functional performance of the components in accordance with GDC 18. Preoperational testing, as described in Section 14.2, was performed to verify that all components, automatic and manual controls, and sequences of operation of the standby power system function as required. Preoperational testing of redundant portions of the onsite electrical power system to verify proper load group assignments was performed in accordance with Regulatory Guide 1.41, Revision 0. Voltage values at Class 1E high and low

voltage buses were measured and compared to the design values, to demonstrate correct transformer tap settings, during the preoperational testing phase of the plant.

Description of Division 3 Test:

To accomplish this test, supply of 4.16-kV Class 1E bus SM-4 was transferred to the startup source. Under this condition, the diesel generator was synchronized to the 230-kV startup source and loaded via manual adjustment of the unit speed controls to at least 50% of continuous rating and operated to this level for at least 1 hr. Sixty-nine such tests have been accomplished with no failures. In addition, five tests have involved loading the diesel with the existing bus loads including the HPCS pump motor.

Significant parameters such as voltage, frequency, operating temperature, acceleration times, and other pertinent functions were monitored throughout the duration of the test and recorded.

At periodic intervals when the reactor is not at power operation, tests simulating Class 1E bus undervoltage, LOCA, undervoltage and LOCA simultaneously, or manual start signals will be performed to demonstrate the capability of the power sources to meet the starting and loading sequencing requirements. Periodic testing will verify the diesel generator being tested is aligned to provide standby power to the associated emergency buses. Testing procedures during these times are described in the Technical Specifications.

Periodically during plant operation, each diesel generator is manually started and loaded. Each (Divisions 1, 2, and 3) unit is separately synchronized to the 230-kV startup offsite power source and loaded.

During diesel generator test mode, a LOCA signal received when a diesel is parallel to an offsite source will cause the diesel generator breaker to trip. The diesel will then remain running in standby mode until shutdown by operator action.

Prior to operation of the standby diesel generators, there are checks to ensure correct valve lineup as well as switch position confirmation as identified in the diesel generator operating procedure. Among these are the normal prestart checks including expansion tank water level, diesel starting air compressor oil level, air start motor in line lubricator oil level, engine crank case oil level, using both the gauge and the dipstick, generator bearing oil level, and the woodward governor oil level. Periodic inspections of the diesel generators will be conducted

in accordance with plant procedures prepared in conjunction with the manufacturer's recommendations.

The testing program is designed to test the ability of each diesel generator to start as well as to run under load long enough to bring all components of the system into equilibrium condition. During the start and load run surveillance, the generator voltage and frequency is verified to be 4160 V (+240, -250) and 60 (+1.2, -1.2) Hz for DG-1, DG-2, and DG-3. The steady-state generator voltage and frequency is verified to be maintained within the above voltage and frequency limits during this test. This ensures that cooling and lubrication are adequate for extended periods of operation. Functional testing of the automatic control circuitry is conducted on a periodic basis to demonstrate proper operation.

Sufficient testability, alarms, and fault detection equipment are provided to comply with the criteria indicated above. Thus assurance is given that the standby power sources are capable of performing their safety functions with adequate reliability at all times.

For periodic testing, the surveillance requirements for demonstrating the operability of the diesel generators are consistent with the recommendations of Regulatory Guide 1.9 Revision 3 as described in the Bases for Technical Specification B 3.8.1. Additionally, periodic testing of all diesel generators is accomplished at intervals specified in the Technical Specifications (TS) which are controlled under the Surveillance Frequency Control Program (SFCP).

8.3.1.2.3 Service Environment

In addition to the effects of operation in normal service environment, all components of the emergency portion of the auxiliary ac power system essential to limiting the consequences of a LOCA are designed to operate in the postaccident environment expected in the area in which they are located. See Section 3.11 for discussion of environmental design and analysis of safety-related (Class 1E) electrical components for postaccident conditions. Section 3.11 also identifies safety-related equipment that must operate in a harsh environment and provides information on the conditions under which the equipment must operate. Section 3.10 identifies Seismic Category I electrical equipment and describes the criteria, design and testing of electrical equipment in compliance with IEEE 344-1971 for seismic qualification.

All cables for Class 1E systems and associated circuits are moisture and radiation resistant, are highly flame retardant and emit negligible amounts of corrosive gas when subject to heat or flame. Certified proof tests are performed on cable samples by thermal aging, to prove radiation resistance by exposure of aged specimen to integrated dosage of 5×10^7 rads, mechanical/electrical tests of previously exposed cable to 340°F and 45 psig steam, to prove flame resistance by the vertical tray, 70,000-Btu/hr flame test for 8 minutes, minimum, and finally, to show acceptable levels of gas by an acid gas generation test. See Section 8.3.3.1.

8.3.1.2.4 Offsite Power System Degradation

8.3.1.2.4.1 General. The CGS auxiliary ac power system is normally supplied by the 25-kV plant main generator (via the normal auxiliary transformers TR-N1 and TR-N2). During this time, the main generating unit is generally synchronized with and furnishes power to the 500-kV BPA grid via the plant main transformer.

During plant startup, shutdown, or sudden loss of the main generating unit, the 230-kV startup offsite power source is capable of supplying all required, steady state, plant auxiliary ac power system loads via the startup auxiliary transformer TR-S.

In the event that both the 25-kV normal source and the 230-kV startup source are unavailable, the 115-kV backup offsite power source supplies (via the backup auxiliary transformer TR-B) the Divisions 1 and 2 Class 1E loads required for safe shutdown.

See Section 8.2 for a detailed description of the CGS offsite power sources. See Section 8.3.1 for a detailed description of the auxiliary ac power system.

Based on previous industry operating experience with BWRs of a similar type, it is estimated that CGS plant availability will be approximately 0.75. When the plant is shut down, auxiliary ac power system loads are supplied by either the 230-kV startup offsite power source, the 115-kV offsite power source, or the 500-kV backfeed with the generator links removed.

8.3.1.2.4.2 Class 1E Auxiliary Alternating Current Distribution System Voltages.

8.3.1.2.4.2.1 Voltage Criteria. The auxiliary ac distribution system is designed to maintain system voltages within acceptable ranges at all levels of the plant distribution system, whether incoming supply is from the plant main generator or from the BPA grid system. Table 8.3-7 indicates the acceptable voltage ranges for the major Class 1E portions of the system, based upon consideration of motor-operating voltage ranges as determining system voltage acceptability. Table 8.3-4 indicates the voltage range over which Class 1E and non-Class 1E motors and motor starters are capable of operating.

Load tap changing capability is not provided on the power transformers utilized at CGS. All power transformers are furnished with no-load type tap changers on the primary side only.

8.3.1.2.4.2.2 Expected Voltages - 25-kV Main Generating Unit Supply. Main generating unit output voltage range is 23.8 kV to 26.3 kV, corresponding to an output voltage variation of ±5% of generator nameplate voltage. This range is based upon the use of a unit automatic voltage regulator designed to maintain generator output voltage between 0.95 pu and 1.05 pu.

The expected voltages in the Class 1E portions of the auxiliary ac distribution system, when supplied from the 25-kV plant main generating unit, are within the acceptable ranges of Tables 8.3-7 and 8.3-4.

Higher bus voltages are expected during shutdown light load conditions when ac distribution system is supplied from the 230-kV grid system.

8.3.1.2.4.2.3 Expected Voltages - 230-kV Grid Supply. The preferred offsite power source grid system voltage has a nominal rating of 230 kV. Minimum and maximum loaded values of grid voltage are 230 kV and 242 kV, respectively.

The expected voltages in the Class 1E portions of the auxiliary ac distribution system, when supplied from the 230-kV grid system, are within the acceptable ranges of Tables 8.3-7 and 8.3-4.

8.3.1.2.4.2.4 Expected Voltages - 115 kV Grid Supply. The backup offsite power source grid voltage has a nominal rating of 115 kV. Minimum and maximum loaded values of grid voltage are 115 kV and 121 kV, respectively.

The expected voltages in the Class 1E portions of the auxiliary ac distribution system, when supplied from 115-kV grid system, are within the acceptable ranges of Tables 8.3-7 and 8.3-4.

8.3.1.2.4.3 Class 1E Auxiliary Alternating Current Distribution System Voltage Sensing.

8.3.1.2.4.3.1 Primary Undervoltage Sensing. High speed, instantaneous undervoltage relays located in each of the 4.16-kV Class 1E switchgear units are utilized for detection of undervoltage at the switchgear buses.

The trip setpoint of each relay is set at 2870 V, corresponding to 69% of nominal bus voltage. Trip setpoint selection is based upon overriding minimum bus voltage during motor starting, with an allowance (10% below minimum motor starting voltage) to compensate for relay setting tolerances.

8.3.1.2.4.3.2 Secondary Undervoltage Sensing. Static Class 1E undervoltage relays with definite time delay located in each of the redundant 4.16-kV Class 1E Divisions 1 and 2 switchgear units are utilized for detection of sustained degraded voltage in the offsite power system. This protection scheme is designed to compliment the primary undervoltage scheme described above, by ensuring ESF motors fed from critical 480-V and 4160-V buses do not operate continuously connected to a degraded voltage source exceeding the motor (NEMA MG-1) design tolerance of $\pm$10% of nameplate, unless a deviation has been analyzed and documented (see Table 8.3-4).

The trip setpoint selection is normally based upon ensuring 90% of motor nominal voltage at the motor terminals, including allowance for feeder (and branch circuit) voltage drop and relay error tolerances. Any deviations are analyzed and documented (see Table 8.3-4). The relay automatically resets when the bus voltage exceeds the 1% differential between dropout (trip) and pickup (reset) settings.

The approximately 8-sec time delay will override the voltage dips associated with motor starting loads under normal operating practice and under normal source voltage.

The relays operate to isolate the degraded source and initiate the sequence of events to select the next available source. Circuit design precludes spurious voltage loss signal and allows for testing of the individual relay, one at a time, without disrupting the protective function.

During a LOCA, the output breaker close permissive for Divisions 1 and 2 diesel generators is satisfied 12 sec after the sustained degraded grid voltage condition is sensed at the emergency bus. This time delay is derived from the approximately 8-sec delay prior to the offsite breaker trip plus an approximately 4-sec delay. The above time delay is acceptable since, during a concurrent LOCA, the ECCS coolant injection time requirements as specified in Table 6.3-2c are met.

See Figures 8.3-1 and 8.3-2 for the logic diagrams of Divisions 1 and 2 secondary undervoltage protection and nominal time delay setpoints.

Similar voltage trip and time delay setpoints are used for the Division 3 secondary undervoltage relays. For Division 3, however, the diesel generator output breaker close permissive is satisfied approximately 9 sec after a coincident occurrence of a LOCA and a degraded grid condition. This time delay is equal to the approximately 8-sec delay prior to the offsite breaker trip plus an approximately 1-sec delay.

See Figure 8.3-32 for the Division 3 secondary undervoltage protection logic diagram and nominal time delay setpoints. The HPCS injection time requirement of Table 6.3-2c are also met.

Assume that during an accident when the emergency motor loads are running a subsequent degradation of offsite grid voltage occurs assuming further that the degraded voltage is anywhere between 69% and approximately 90% of the bus nominal voltage. The following analysis shows that the motor loads remain adequately protected and ready for a restart as soon as the power supply has been restored to normal. Under the above condition the emergency motors would be exposed to terminal voltage between 72% and 90% (approximately) of nameplate value. For terminal voltages between 80% (or 75% for the HPCS pump motor) and 90%, the motor will continue to run overloaded up to 125% (133% for the HPCS pump motor) of full load current. The motors can safely carry this overload for 8 sec. For voltages less

than 80% (75% for the HPCS pump motor), the motor torque could be less than the load torque, thus resulting in deceleration and eventual stalling.

At rated voltage and cold start conditions the motors are protected against locked rotor currents by a relay which trips and locks out within 15 sec. However, for a degraded voltage condition which could cause motor stalling, the secondary undervoltage relaying is set to trip the offsite source breaker approximately 8 sec after the undervoltage condition develops and the locked rotor protective relay will not trip. Load shedding after 8 sec trips the motors without locking them out. A subsequent motor restart when power supply is restored will expose the motor to locked rotor currents for another 5 sec as a maximum (based on maximum motor starting time of 5 sec at rated voltage). The total stall time is therefore equal to approximately 13 sec. This is less than the designed motor safe stall time of 14 sec at 80°C winding temperature. Since the voltage at the motor is assumed to be less than 90% of the rated value, resulting in lower locked rotor currents it follows that there is sufficient margin between the motor stall time under the above worst case conditions and the designed motor safe stall time.

It should be noted that critical (Class 1E) plant controls and vital instrumentation are supplied by redundant (Divisions 1 and 2) divisions of the 120/240-V ac Class 1E uninterruptible power supply (UPS) system. This system supplies loads via inverters with static transfer to an alternate AC supply in case of circuit faults or loss of inverter voltage. The on-line static inverter provides regulated output voltage within ±2% of nominal to the vital instrument bus loads. From rated output to overcurrent overloads up to approximately 125% of the continuous rating the inverter will continue to maintain a nominal voltage. When the ferro-resonant inverter experiences higher overloads it will go into current limit mode at which time output voltage from the inverter will begin to collapse. At 120% current overload the inverter will engage the static transfer feature from the inverter to the alternate AC supply before the inverter goes into final current limit and before voltage supply drops off so the voltage supply to the vital instrument bus load remains unaffected. This automatic transfer sensed as an inverter overload is inhibited when the alternate AC supply to the vital instrument bus is not available.

The alternate supply line voltage is regulated within ±10% of normal in accordance with the NSSS vendor's requirements. A manual bypass switch is provided for maintenance of the inverter or static switch.

Table 8.3-8 indicates the various monitors and alarms (annunciators/computer) provided to monitor system voltages.

8.3.1.3 Physical Identification of Safety-Related (Class 1E) Equipment

Each safety-related electrical component or cable is tagged with an identification number. In addition, a color-coded separation marker is provided along with the identification number which indicates the assignment to one of seven divisions (Division 1, 2, 3, 4, 5, 6, or 7). This division marker is inscribed with color-coded characters on a color-coded background as

described in Reference 8.3-2, which was submitted to the NRC. Assignment of equipment to the seven divisions is given in Reference 8.3-2.

Cable routing information is provided in Reference 8.3-2. This illustrates the computer program used for identification and routing of cables in trays. Routing information for cables in conduits is provided in raceway layout drawings. Reference 8.3-2 also contains sample cable routing schedules. Actual cable tray drawings for the diesel generator, reactor and radwaste/control buildings are shown in Figures 8.3-6, 8.3-25 through 8.3-30, and 8.3-33 through 8.3-38.

A list of Class 1E components and equipment is provided to facilitate identification of safety-related components and their circuits.

8.3.1.3.1 Class 1E Raceways, Cables, Equipment (Panels and Racks), and Enclosures

See Reference 8.3-2.

In addition to the discussion provided in Reference 8.3-2, circuits that have been upgraded from non-Class 1E to Class 1E and are already installed in raceways are identified with a Class 1E color coded marker at terminations, pull boxes, and entrances and exits to raceways. Upgraded cables are routed in Class 1E raceways. Cable installation records are reviewed to provide assurance that these cables are routed in Class 1E raceways and installed to Class 1E requirements (cable installation parameters). Otherwise, megger and continuity tests shall be performed, termination and routing reinspected to Class 1E requirements, and documentation prepared verifying the upgrade.

8.3.1.3.2 Prime and Associated by Proximity Circuit Raceways, Cables, Equipment, and Enclosures

See Reference 8.3-2.

8.3.1.3.3 Non-Class 1E Raceways, Cables, Equipment, and Enclosures

See Reference 8.3-2.

8.3.1.4 Independence of Redundant Systems

The physical independence of electrical systems complies with the requirements of IEEE 279-1971, IEEE 308-1974 (IEEE 308-1971 for the HPCS system), GDC 3 and 17, and Regulatory Guide 1.6, Revision 0. See Table 7.1-3 for a matrix of the applicability of codes and standards to the various safety-related systems. The physical separation of mechanical equipment including piping and instrumentation tubing is not included in this section. However, sufficient separation between redundant plant protection system equipment is provided such that the capability of the protection systems to mitigate the consequences of any DBA and bring the reactor to a cold shutdown condition is ensured. See Section 3.1.

8.3.1.4.1 Definitions

See Reference 8.3-2.

8.3.1.4.2 General Separation Criteria

The criteria in this section provides sufficient physical independence of Class 1E electrical systems so safety-related systems can perform their engineered safety function during any DBA and bring the reactor to a cold shutdown condition.

8.3.1.4.2.1 Cable Separation. Cable separation is achieved by segregating electrical circuits by voltage level and service it performs (such as power, control, or signal) by engineered system designations, by power supply and divisional separation categories, and by routing as described in Reference 8.3-2.

Power cables of different voltage ratings are routed in different cable trays except as follows: (1) common tray is permitted for 480 V, 120/208 V ac, 125 V and 250 V dc of compatible divisions, and (2) common tray is permitted for 4160-V and 6900-V power cables of compatible divisions; 480-V, 4160-V, and 6900-V power cables are not to be installed in cable trays in the spreading area beneath the control room. If a run through this area is unavoidable, the power cable is installed in conduit.

Power cables are installed in raceways separate from control cables and low level signal cables and where vertically stacked, the power cables are placed in the tray with the highest position in the tray tier. Stacking of multiple power trays are such that the voltage levels decrease sequentially from the top of the bottom tray in the stack.

In addition to the discussion provided in Reference 8.3-2, control circuits are low energy circuits for the following reasons: the largest protective devices for control circuit fuses (35 amp) are found only in 4-kV switchgear breaker trip circuits; the majority of the control circuits are intermittent with circuit protective device having 5- to 20-amp ratings; the circuit protective device ratings are chosen to accept initial momentary in-rush currents; and the actual circuit normal operating current is generally in the 0.1 to 2 amp range.

In addition to the discussion provided in Reference 8.3-2, associated cables are procured to the same requirements as Class 1E. When not bulk pulled with Class 1E cables they are installed to the same installation parameters as Class 1E cables except that verification documentation for sidewall pressure, pull tension, and minimum bend radius may not be available. Associated cables comply with at least one of the following requirements:

a. Where installed in cable trays, raceways, and PGCC floor ducts,

   1. They are uniquely identified as associated or as Class 1E circuits and remain with, or are physically separated the same as, those Class 1E circuits with which they are associated;

2. They are identified in accordance with item 1 above from the Class 1E equipment up to and including an isolation device. Beyond the isolation device, such a circuit is not considered an associated circuit and does not conform to item 1 above, provided it does not again become associated with a Class 1E system; or

3. They are analyzed or tested to demonstrate that Class 1E circuits are not degraded below an acceptable level.

b. Where installed in enclosures and equipment, external to trays, raceways, and PGCC floor ducts (item a above), associated circuits which become associated due to sharing of enclosures with Class 1E circuits are not separated; they are analyzed to show that the Class 1E circuits are not degraded below an acceptable level.

In addition to the discussion provided in Reference 8.3-2, non-Class 1E (non-associated) cable numbers are prefixed by "A" or "B" and are routed in non-Class 1E raceways. They are procured to the same requirements and installed to the same installation parameters as Class 1E cables, except for a few vendor supplied cables designated in the computerized cable schedule as Type Z.

The isolation of non-Class 1E circuits from Class 1E circuits or associated circuits is achieved by complying with at least one of the following requirements:

a. Non-Class 1E circuits are physically separated from Class 1E circuits and associated circuits by the minimum separation requirements specified for redundant Class 1E divisions or they become associated circuits; or

b. Non-Class 1E circuits are electrically isolated from Class 1E circuits and associated circuits by the use of isolation devices, shielding and wiring techniques, physical separation, or an appropriate combination, or they become associated circuits; or

c. The effects of lesser separation or the absence of isolation between the non-Class 1E circuits and the Class 1E circuits or associated circuits are analyzed to demonstrate that Class 1E circuits are not degraded below an acceptable level or they become associated circuits; or

d. Non-Class 1E low energy (instrumentation and control) circuits are not required to be physically separated or isolated from associated circuits provided: (1) the non-Class 1E circuits are not routed with associated cables of a redundant division; or (2) they are analyzed to demonstrate that Class 1E circuits are not

degraded below an acceptable level. As part of the analysis, consideration is given to potential energy and identification of the circuits involved.

Since power circuits are not considered to be low energy, the analysis applied to non-Class 1E-to-Class 1E/associated separation described above does not totally apply. Non-Class 1E power cables routed in open raceways (trays) dedicated to non-Class 1E power cables are physically separated from all Class 1E/associated cable trays with the same requirements specified for physical separation of redundant Class 1E cable trays. For other than open raceways, additional information is provided in Section 8.3.1.4.4.

8.3.1.4.2.2 Cable Routing. In addition to the discussion provided in Reference 8.3-2, the routing of cables in raceways is in accordance with the following:

a. Cable splices are not normally designed into the cable system (except for cables entering containment at electrical penetrations). If required, they are not permitted in cable trays, but are made in conduit fittings or metallic electrical boxes;

b. All cabling for use in Class 1E systems, and for associated circuits, is designed to resist combustion as described in Section 8.3.3. Cable flame retardance characteristics and routing arrangement eliminate (insofar as practical) the potential for fire damage to cables and the spread of fire between redundant divisions;

c. Power cable ampacities are based on NEMA publication number WC51-1975 for cables routed in trays and ICEA publications P46-426 for cables routed in conduit including underground conduits (ducts). Additional cable ampacity derating factors have been used for fire rated barrier material on raceways, covered trays, conduit clusters, and ambient air temperatures above 40°C. Power trays can be filled to 40% of the cross-sectional area, which is based on a 4-in. deep tray. The cable ampacity is determined from the calculated cable depth;

d. In general, hazardous areas are avoided to limit circuit failures to failures or faults internal to the electric equipment or cables. Where hazardous areas cannot be avoided an analysis is provided;

e. In the cable spreading and main control room areas, 120-V ac (or below) and 125-V dc (or below) branch circuits from distribution panels to the control boards and terminal cabinets are routed in conduit. The only power cables in these areas are the 460-V ac feeders to the control room emergency lighting panel step-down transformers; these cables are routed in conduit; and

f. In addition to the discussion provided in Reference 8.3-2, underground cables for Class 1E systems comply with GDC 1, 2, 3, 4, and 17, as well as IEEE 308-1974 and the following:

1. Underground cables between manholes are run in concrete encased plastic ducts for non-Class 1E systems and in reinforced concrete encased steel ducts for Class 1E systems; and

2. Underground ducts for Class 1E cables are Quality Class I and Seismic Category I. Cables are fire retardant type, and where splices are necessary in manholes because of the length of pull, waterproofing is used.

8.3.1.4.2.3 Physical Separation Criteria. Physical separation as a protection against single failures of redundant Class 1E power, control, and instrumentation systems (Divisions 1 to 7) is provided. Where the use of separate safety class structures is not feasible, spatial separation is the preferred method of achieving separation. Methods of maintaining physical separation are as follows:

a. Non-safety-related equipment, components, or piping are not installed above safety equipment. Where installation above safety equipment cannot be avoided, the supports are installed to Seismic Category I requirements or analysis is made to demonstrate that failure will not impair the overall function of the safety system;

b. Where Class 1E equipment or cabling is located or routed in areas where there is a potential for internally generated missiles, pipe whip, or flood, a protective barrier is provided or an analysis is performed to ensure that a loss of plant capability to mitigate the consequences of an accident and/or to bring it to a safe shutdown condition cannot occur;

c. Fire-rated fire stops, fire barriers, and/or electrical separation barriers are provided between redundant electrical equipment including raceways whenever the physical separation distances required in Reference 8.3-2, are not met. Acceptable barriers are noted in the above referenced document.

Raceways penetrating fire-rated walls, floors, or ceilings are sealed with a fire-rated fire stop; and

d. Raceways penetrating pressure boundaries are sealed to maintain the pressure rating. See Appendix F for compliance with 10 CFR 50 Appendix R.

8.3.1.4.2.4 Administrative Controls for Ensuring Separation Criteria. The quality assurance procedures described in IEEE 336-1971 are employed during the design and installation of the cable system to ensure compliance with the design criteria. Design drawings and cable lists are prepared, reviewed, and approved for installations. Each cable and raceway is identified in the computer program, and the identification includes the applicable separation classification. Cable routing programs ensure that cables or particular separation groups are routed through the appropriate raceways. Cables are installed in accordance with written procedures which specify quality requirements, inspection, and documentation requirements for all cable pulls.

In some cases it has been necessary to upgrade certain cables from a non-Class 1E status to either a Class 1E or prime cable status. Postinstallation procedures exist to upgrade such cables. These cables are evaluated on an individual basis and allowed to deviate from the normal installation procedures.

The following briefly describes the upgrading procedure for various categories of cables:

a. Non-Class 1E cables upgraded to Class 1E

1. Cable identification tags are revised at all terminations, pullpoints, entrance, and exits to raceways; and

2. Cable installation records are reviewed to provide assurance that these cables are routed in Class 1E raceways and installed to Class 1E requirements. Otherwise, megger and continuity tests are performed, termination and routing is reinspected to Class 1E requirements, and documentation is prepared verifying the upgrade;

b. Non-Class 1E cables upgraded to prime cables

1. Same upgrade as a.1 above; and

2. Routing and termination is reinspected to Class 1E requirements and documentation is prepared verifying the upgrade.

8.3.1.4.2.5 Separation For Fail-Safe Systems. See Reference 8.3-2.

8.3.1.4.2.6 Equipment and Circuits Requiring Separation. Equipment and circuits requiring separation are identified on documents and drawings in a distinctive manner.

8.3.1.4.2.7 Compliance to Regulatory Guide 1.75, Revision 1. This regulatory guide is not applicable to CGS since the CGS Construction Permit date precedes the regulatory guide issue date. However, the actual plant design does provide a technically acceptable alternative to the

requirements of the guide. Independence between equipment and circuits of redundant Class 1E electrical divisions is provided to satisfy 10 CFR 50 requirements.

Deviations to the guide are listed below:

a. Paragraph C.1 of Regulatory Guide 1.75, Revision 1, excludes the use of fault current actuated circuit interrupting devices as an isolation device;

CGS uses overcurrent actuated circuit breakers and fuses. Justification for this deviation is provided in Sections 8.3.1.2.1.1 and 8.3.2.2.1.1;

b. Paragraph 4.5 of IEEE 384, as endorsed by Regulatory Guide 1.75, Revision 1, Paragraph C.4, states that associated circuits should meet all the same requirements as those placed on Class 1E circuits. Some CGS cables, which are associated by the IEEE 384 definitions may be partially routed in non-Class 1E raceways as well as Class 1E raceways. These cables, when routed in the non-Class 1E trays, are not considered associated based on analysis. They meet all the pull/termination documentation requirements placed on Class 1E cables when they are bulk pulled with Class 1E cables. When they are not bulk pulled with Class 1E cables, they are installed to the same installation parameters as Class 1E by procedure, except that verification documentation for sidewall pressure, pulling tension, and minimum bend radius may not be available;

c. Paragraphs 4.6.1 and 4.6.2 of IEEE 384 as endorsed by Regulatory Guide 1.75, Revision 1, require that non-Class 1E circuits be separated from Class 1E/ associated circuits by the same minimum separation required between redundant Class 1E circuits, unless the non-Class 1E circuits are classified as associated. As discussed in (b) above, some circuits that would be classified as “associated” by the IEEE 384 definition are partially routed in non-Class 1E raceways and, therefore, are not separated from non-Class 1E circuits. Class 1E physical separation is not necessarily maintained between the non-Class 1E and Class 1E raceways, except for power trays as noted in Section 8.3.1.4.2.1.

Inside enclosures, non-Class 1E circuits are not separated from Class 1E circuits and thus would be termed “associated” by Regulatory Guide 1.75. These circuits are Category 1C and treated as non-Class 1E, except for prime circuits which do meet Class 1E separation requirements. Justification for this deviation is described in Section 8.3.1.4.4.1.3;

d. Paragraphs 5.1.3 and 5.1.4 of IEEE 384 as endorsed by Regulatory Guide 1.75, Revision 1, required a minimum separation of 1-in. between enclosed raceways of redundant divisions. This requirement is not met in CGS though the raceways are not physically touching. Justification for this deviation is based on

Wyle Lab tests No. 56719 and No. 56669 for the Susquehanna Steam Electric Station. These tests demonstrate that rigid steel conduits and some specific heat-resistant sleeving materials qualify as barriers against potential damage due to an electrical fault in one of the circuits requiring separation; and

e. Paragraph 5.6.3 of IEEE 384 as endorsed by Regulatory Guide 1.75, Revision 1, requires identification of internal wiring to distinguish between redundant Class 1E wiring and between Class 1E and non-Class 1E wiring. At CGS the panel or enclosure is assigned to a given Class 1E division if the majority of the contained wiring belongs to this division. Circuits compatible with this division and non-Class 1E wiring in the panel are not identified. However, if Class 1E wiring for a redundant division or wiring associated by connection to the redundant division are also present in the same panel, then these wires are identified by color coded tags as shown in Reference 8.3-2.

8.3.1.4.3 Physical And Spatial Separation Details

See Reference 8.3-2.

Structures are designed to provide protection from the effects of wind loadings, tornadoes, external missiles, flooding, and earthquakes. All Class 1E equipment, components, and raceways, and their supports, are designed to Seismic Category I requirements (see Section 3.10 for discussion of seismic capability).

8.3.1.4.3.1 Standby Generating Units and Auxiliaries. The standby diesel generator sets are located in separate equipment rooms in the diesel generator building. Auxiliaries and local controls for each diesel generator set, separated the same as the units themselves, are also located in this building. Each unit is provided with an independent air supply.

8.3.1.4.3.2 Direct Current Power Systems. The Class 1E dc power systems include batteries, chargers, and associated equipment. Equipment for redundant systems is located in separate rooms. For further description see Section 8.3.2.

8.3.1.4.3.3 Switchgear. Separate electrical equipment rooms are provided in the radwaste/ control building for redundant 4.16-kV and 480-V Class 1E Divisions 1 and 2 switchgear as shown in Figure 1.2-14. The Division 3 4.16-kV Class 1E switchgear and 480-V Class 1E MCCs are located in the diesel generator building.

8.3.1.4.3.4 Motor Control Centers and Distribution Panels. The MCCs, distribution panels, and miscellaneous electrical equipment of redundant divisions are either spatially separated or are located in separate rooms of safety class structures.

8.3.1.4.3.5 Containment Electrical Penetrations. There are 24 electrical penetrations which provide electrical power to equipment inside the primary containment as described in Section 3.8.6.1.4. Redundant Class 1E circuits for loads located inside primary containment are routed through separate penetrations with the exception of HPCS cabling. HPCS (Division 3) cabling is routed through a Division 2 penetration in a separate sleeve.

8.3.1.4.3.6 Power Generation Control Complex. The PGCC is defined in Reference 8.3-2. PGCC is a modular design concept which allows the fabrication, installation, and testing in a quality controlled environment in accordance with the requirements of 10 CFR 50, Appendix B (see Figures 8.3-39 and 8.3-40). The PGCC forms an interface between the field cables and the control panels and consists of three different subassemblies: termination cabinets (T/C), modular floor sections, and cable assemblies.

8.3.1.4.3.6.1 Termination Cabinets. Termination cabinets provide the interface with the field cables (see Figures 8.3-41 and 8.3-42) and consists of three different subassemblies: termination modules, connector plates (including connectors), and junction boxes for flexible conduit terminations (see Figure 8.3-43). The T/C enclosures are constructed of 3/16-in. steel plate welded to 3/8-in. steel corner angles and use swing and stationary steel barriers for fire separation between redundant system cables. Seismic and fire tests have been conducted on these units as reported in the licensing report NEDO-10466A (Reference 8.3-3). The fire tests demonstrated the adequacy of the stationary steel barriers. In addition to the overall structural fire protection design of the PGCC (see Figure 8.3-44), products of combustion detectors are located at the top of each termination cabinet. These detectors are monitored on each module fire control panel and on the main control room fire control panel. Additional defense in depth measures include the installation of fire stops and penetration seals at all cable entrances to the cabinet, and the use of fire retardant materials, and the use of unlocked cabinet doors to allow rapid use of hand-held extinguishers (see Figure 8.3-45).

8.3.1.4.3.6.2 Modular Floor Sections. The modular floor section is a latticed floor constructed of steel "I" beams and rectangular steel tubes forming longitudinal and lateral ducts. These ducts interconnect the control panel modules (which are bolted on the modular floor section) and the termination cabinet (see Figures 8.3-40 and 8.3-46). The network, including transition and extension ducts, provides divisional separation with the use of vertical and/or horizontal barriers and fire stops. Miniducts (Figure 8.3-47) are for divisional separation within the longitudinal ducts. Cables in the miniducts are routed in flexible metallic conduit or wrapped in Haveg Siltemp tape.

When it is necessary to route cables between PGCC sections which are not directly connected by floor ducts, it is permissible to route these cables through the cable spreading room; see Reference 8.3-2.

Fire protection is provided in accordance with the PGCC Licensing Topical Report, NEDO-10466A (Reference 8.3-3) and Appendix F. Products of combustion and thermal

detectors are provided in the floor section longitudinal ducts. These detectors are monitored on the respective PGCC module fire control panel and on the main control room fire control panel where zoned alarms are grouped by floor section. Products of combustion detectors will prealarm to allow a manual response through quickly removable floor plates. Thermal detectors will automatically release Halon 1301 through a distribution system into each of the floor sections longitudinal cable ducts. Fire stops and penetration seals are located in the ducts that access the termination cabling and in the ducts that access the control panels (see Figure 8.3-48). Floor plates consist of an aluminum honeycomb core, 1-1/16 in. thick.

8.3.1.4.3.6.3 Power Generation Control Complex Cable Assembly and Routing. The cable assembly within the PGCC is designed around the following variables: engineered system designation, circuit signal classification, PGCC separation classification based on power supply, and finally, the origination/destination which provides the routing and length (see Figure 8.3-49). (See Reference 8.3-2.) Each PGCC cable is precut, assembled (with lugs and connectors at either end as required), and installed in the panel/floor module shipping section. Special cable and routing requirements are identified in Reference 8.3-2. The cable jacket and conductor insulation for the cables within the PGCC is either Raychem Flamtrol, General Electric Vulkene/Geoprene, Teflon, or Tefzel. The fire suppression system has been provided to limit a cable fire and resulting offgasing/smoke.

Cable routing consists of two categories: field interface terminations (FITS) and system interface terminations (SITS). FITS cables are routed between termination cabinets and PGCC control panels, while SITS cables are routed between PGCC control panels and do not interface with balance-of-plant (BOP) field cable (see Figure 8.3-39).

8.3.1.4.3.7 Separation Within Enclosures and Equipment. See Reference 8.3-2.

Within equipment and enclosures it may be necessary for a single device such as a relay to be connected to wiring from redundant safety divisions. In such cases the intruding division wiring is routed immediately away from the device to attain the required 6-in. separation or to the extent where a barrier can be installed.

Where relays are used for isolation coil-to-contact separation is provided except as described below for fail-safe circuits. General Electric types HMA, HFA, and CR105, and Agastat type GP relays are used. The relays are used for 125-V dc or less applications. The justification for this type configuration is the following:

Contact-to-contact separation between redundant divisions within relay isolation devices is acceptable when utilized within fail-safe system (RPS and containment isolation) logic. Justification is as follows:

a. Logic circuits are fail-safe, i.e., loss of power from faults results in safety system actuation;

b. Logic is arranged in a one-out-of-two twice network such that contacts utilized in redundant logics are reversed in order in each logic. This arrangement allows the logic to always function in a fail-safe manner irrespective of hot shorts or ground fault combinations;

c. Intruder circuits to the relay contacts are separated from residing wiring by 6 in. or an approved barrier which is installed, as practicable, between redundant division wiring as near to the device as possible;

d. The circuits are all control circuits which are low energy;

e. Wire insulation is fire retardant complying with the requirements of IEEE 383-1974 or equivalent;

f. Each circuit is provided with Class 1E overcurrent protective devices to isolate faults;

g. These circuits are not allowed to bridge directly between redundant Class 1E raceways;

h. Fire loading inside panels is a minimum; and

i. Wire insulation within these relays is rated at 600-V minimum Type Class A or H while the control circuit voltage carried by this wiring is 125-V dc maximum.

As described in Reference 8.3-2, within enclosures/equipment it is acceptable to have secondary bridging between redundant division wiring by non-Class 1E control and instrumentation (low energy). Wiring secondary bridging is not allowed by non-Class 1E power cables unless supported by analysis. The following analysis is provided to justify the power cable secondary bridge(s) which exist within the CGS design:

a. Power cables upstream of the Class 1E 4160-V ac buses are part of the offsite power source scheme and are exempted from the bridging requirement; and

b. A single 6900-V ac circuit from the ASD providing power to the reactor recirculation pump(s) is routed between a Division 1 and a Division 2 circuit breaker enclosure and comes in proximity to both Divisions 1 and 2 breaker control 125-V dc circuits. These breakers are provided to ensure that the reactor recirculation pump(s) will trip when a main turbine generator trip occurs. This ensures adequate reactivity shutdown margin at control rod end of cycle. These breakers are Class 1E but not required to respond to a LOCA or a high-energy line break (HELB). Each control circuit is located in a separate and

independent cabinet and protected by Class 1E protective devices (fuses). Any faults occurring in the 6900-V ac circuits will be cleared by the overcurrent trips provided with these Class 1E circuit breakers.

8.3.1.4.3.8 Spatial Separation Between Raceways. See Reference 8.3-2.

8.3.1.4.3.9 Spatial Separation of 120/240 VAC Critical (Class 1E) Instrument Power System.

Redundant Division 1 and Division 2 instrument power systems, with separate inverters and static switches are located in separate rooms in the Radwaste/Control building vital island (seismic category 1 structure) supplying power to separate distribution panels E-PP-7AA (and E-PP-8AA) located on opposite sides of the Main Control Room.

8.3.1.4.4 Associated Circuit Analysis

Non-Class 1E control and instrumentation cables as discussed in Reference 8.3-2 illustrates the various circuit configurations that result in associated circuits within the designed cable and raceway systems. These non-Class 1E cables which become associated by connection or proximity to a Class 1E circuit are representative of the definition of associated circuits in Reference 8.3-2. Associated cables described in Reference 8.3-2 are routed in compatible divisional trays. These cables are uniquely identified and while routed with Class 1E cables are physically separated the same as those Class 1E circuits with which they are associated except inside enclosures.

8.3.1.4.4.1 Categories of Associated Circuits Treated as Non-Class 1E. The following categories of circuits are treated as non-Class 1E circuits. Justification is provided in Sections 8.3.1.4.4.1.1 to 8.3.1.4.4.1.8.

Category 1A: Non-Class 1E instrumentation and control cables/wires that are not supplied Class 1E power and are routed in non-Class 1E raceways, but have a continuing section in Class 1E raceways or enclosures. See Figure 8.3-50.

Category 1B: Non-Class 1E instrumentation and control cables/wires that are supplied Class 1E power and are routed in non-Class 1E raceways, but have a continuing section in Class 1E raceways or enclosures. See Figure 8.3-50.

Category 1C: Non-Class 1E instrumentation and control cables/wires that are not supplied Class 1E power, but are associated by proximity inside an enclosure. See Figure 8.3-50.

Category 2A: Non-Class 1E power cables/wires that are not supplied Class 1E power and are routed in non-Class 1E raceways, but have a continuing section in Class 1E raceways or enclosures. See Figure 8.3-50.

Category 2B:	Non-Class 1E power cables/wires that are connected to Class 1E power and are routed in non-Class 1E raceways, but have a continuing section in Class 1E raceways or enclosures. See Figure 8.3-50.
Category 3A:	Non-Class 1E instrumentation circuits that are connected to Class 1E circuits and utilize current limiting isolation devices. See Figure 8.3-50.
Category 3B:	Non-Class 1E power cables/wires that are connected to Class 1E power through a series of two Class 1E circuit breakers or fuses.
Category 3C:	Non-Class 1E power cables/wires that are supplied Class 1E power through other than two Class 1E isolation devices.

8.3.1.4.4.1.1 Analysis for Category 1A Non-Class 1E Circuits. The postulated events for this category of non-Class 1E instrumentation and control cables (non-Class 1E powered, but a continuing section associated by proximity with Class 1E cables/wires) are mechanical, structural, or electrical failures in the non-Class 1E raceway or equipment during seismic or other degrading events, e.g., missiles. Failure of non-Class 1E raceways and equipment may result in short circuits manifesting as overcurrents in the non-Class 1E cable section routed with Class 1E cables. Class 1E cables can only be effected by these failures if circuit protective devices in the non-Class 1E circuits fail to clear the short circuit and sufficient electrical energy exists to cause localized fires or cable insulation failures of Class 1E cables in the Class 1E raceway sections. This condition must occur simultaneously in two redundant division raceways and involve cables having redundant safety functions before plant safety is degraded. The following design features are provided to demonstrate that even with the unlikely events listed above, the effects on safety-related systems are minimized:

a. Overcurrent protective devices (including current limiting) are provided to isolate the cables or wires carrying abnormal currents and limit the effects on the Class 1E cables. In many cases non-Class 1E circuits routed with Class 1E circuits are protected by Class 1E overcurrent circuit protective devices. Those devices which are not Class 1E are highly reliable industrial grade equipment and, in general, are the same models as those which are qualified to Class 1E requirements;

b. The cable insulation and jacketing are fire retardant per IEEE 383-1974 or equivalent (see Section 8.3.3). Cable types are selected and routed according to their voltage level and application;

c. Fire stops are provided at or near the penetration of all fire-rated barriers, seismic gaps, and entrances to PGCC panels (including termination cabinets). Penetrations of pressure boundaries are sealed to maintain the pressure rating;

d. The cables routed in instrumentation and control raceways are low energy circuits and, as such localized fires or insulation failures are not expected;

e. Non-Class 1E cables are not allowed to bridge directly between redundant Class 1E raceways (except as allowed by Reference 8.3-2), thus preventing single cable faults from affecting two redundant Class 1E divisions; and

f. Pipe whip/jet impingement and missile studies provide structural barriers and/or restraints where required to prevent impact on redundant ESF required to mitigate the consequences of these events and safely shutdown the plant.

8.3.1.4.4.1.2 Analysis for Category 1B Non-Class 1E Circuits. This category of non-Class 1E circuits are instrumentation and control cables/wires that are supplied Class 1E power and have continuing sections routed in Class 1E raceways. The postulated failures and results are the same as those of Category 1A.

The following design features are provided to minimize the occurrence of this hazard.

a. Those listed under Category 1A-b, c, d, e, and f;

b. Class 1E coordinated overcurrent protective devices have been provided for all Category 1B non-Class 1E circuits to protect Class 1E buses from failures in non-Class 1E loads. These devices may be current-limiting fuses or circuit breakers. See Sections 8.3.1.2.1.1 and 8.3.2.2.1.1;

c. These circuits have been designated "prime" downstream of the circuit isolation device and adhere to the same physical separation requirements imposed on Class 1E circuits. Barriers used to comply with Class 1E separation requirements are provided between Division A and Division B raceways that contain redundant prime cables where design constraints prevent adequate physical separation of these raceways; and

d. Prime cables are separated the same as Class 1E cables within enclosures. An A prime 1 (A'1) cable is treated like a Division 1 cable and a B'2 cable is treated like a Division 2 cable.

8.3.1.4.4.1.3 Analysis for Category 1C Non-Class 1E Circuits. This category of non-Class 1E circuits are non-Class 1E powered instrumentation and control circuits that become associated by proximity to Class 1E cables inside enclosures. The analysis for Category 1C is similar to Category 1A. See Section 8.3.1.4.4.1.1.

8.3.1.4.4.1.4 Analysis for Category 2A Non-Class 1E Circuits. This category of non-Class 1E cables consists of power cables that are not supplied power from a Class 1E source and are routed in non-Class 1E raceways, but have a continuing section in Class 1E raceways or enclosures. The analysis for this category is identical to Category 1A except that these circuits are not low energy circuits and under short circuit conditions may provide

sufficient energy to cause localized cable failures in the Class 1E raceway sections. See Section 8.3.1.4.4.1.1. The justifications for these circuits are as follows:

a. Those as listed under Category 1A-a, b, c, e, and f;

b. A safe shutdown analysis was performed for this category of cables with the following assumptions, guidelines, and results:

   1. Non-Class 1E power cables analyzed were those which had a portion of their route with Class 1E power cables;

   2. A single non-Class 1E power cable was assumed to fault. A worst case single failure was assumed in addition to the failures of the Class 1E cables routed with the faulted non-Class 1E cable. Circuit overcurrent interrupting devices (fuses/breakers) were assumed to clear the fault without damage if the devices were Class 1E;

   3. Those non-Class 1E power cables whose failure resulted in the loss of ability to safely shutdown the plant were identified; and

   4. The identified cables were either rerouted or provided with Class 1E circuit protective devices.

c. The 480-V system is high resistance grounded to limit ground fault currents to 10 amps maximum (see Section 8.3.1.1.9). Phase-to-phase faults are not limited;

d. The 6.9-kV and 4.16-kV systems are high resistance grounded to limit ground fault currents to 12.5 amps maximum. Phase-to-phase faults are not limited;

e. For cable loading in power trays see Section 8.3.1.4.2.2;

f. Non-Class 1E 480-V combination motor starters in MCCs are provided current limiting fuses and thermal overload relays which are designed to operate at 1.25 times full load current;

g. Since power circuits are not considered to be low energy non-Class 1E power cables routed in open raceways (trays) dedicated to non-Class 1E power cables are physically separated from all Class 1E associated cable trays with the same requirements specified for physical separation of redundant Class 1E cable trays; and

h. Certain non-Class 1E loads which are normally supplied from a Class 1E source but have no useful postaccident function are shunt tripped from the Class 1E bus by providing a LOCA trip signal to a Class 1E breaker in the non-Class 1E circuit. Those loads that are not tripped are assumed to be energized and included in the appropriate bus loading calculation. See Section 8.3.1.4.4.1.7. This removes the potential for Class 1E circuit damage from failures in these non-Class 1E loads during and following these accidents.

8.3.1.4.4.1.5 Analysis for Category 2B Non-Class 1E Circuits. These circuits are non-Class 1E power cables that are supplied power from a Class 1E source, are routed in non-Class 1E raceways, and have a continuing section in Class 1E raceways or enclosures. Justification for these circuits are as follows:

a. Those listed under Category 2A, and
b. Those listed under Category 1B-b, c, and d.

8.3.1.4.4.1.6 Analysis for Category 3A Non-Class 1E Circuits. The cables in this category consist of data logging and display type instrumentation circuits such as inputs to the analog process computer. These circuits are low energy circuits that are connected to Class 1E signal circuits through current limiting resistance units or current limiting power supplies such that a fault in the non-Class 1E portion of the circuit does not affect operation of the Class 1E circuit. These circuits are not identified or separated as prime circuits downstream of the current limiting units. Downstream of the current limiting units these circuits are reviewed to ensure that direct bridging between redundant division raceways does not occur except as allowed by Reference 8.3-2. Additionally, the justifications for Category 1A apply.

8.3.1.4.4.1.7 Analysis for Category 3B Non-Class 1E Circuits. The non-Class 1E cables in this category are connected to Class 1E power supplies and supply power to important non-Class 1E loads such as: emergency lighting, obstruction lighting, main control room normal lighting, synchronization circuits, portions of the standby liquid control system, portions of the source range monitor (SRM) and intermediate range monitor (IRM) systems, TIP system feeders, meteorological tower supervisory, fire protection circuits, diesel generator building welding outlets, power panel E-PP-7AZ, power panel E-PP-8AZ, the UPS inverters (IN-1 and IN-4) breaker control circuits for accident tripped breakers RCC-CB-P/1A, RCC-CB-P/1B, RCC-CB-P/1C, ROA-CB-FN/1A, ROA-CB-FN/1B, REA-CB-FN/1A, REA-CB-FN/1B, and welding receptacles. To prevent failures in the non-Class 1E loads from effecting the Class 1E power supplies, two-series Class 1E circuit protective devices are provided for these circuits. Downstream of the circuit protective devices the circuits need not be identified or separated as Prime, but may be identified as non-Class 1E. As in Category 3A above, these circuits are reviewed to ensure that direct bridging between redundant division raceways does not occur. Additionally, justifications a, b, c, and f, of Category 1A apply.

8.3.1.4.4.1.8 Analysis for Category 3C Non-Class 1E Circuits. The non-Class 1E cables in this category connect to non-Class 1E loads to Class 1E power supplies by means other than two-series Class 1E isolation devices. Description and justification are as follows:

a. The TDAS UPS Inverter (IN-5) which supplies power to the non-Class 1E TDAS loads (computer, remote multiplexers, etc.) is connected to the Class 1E power supply through a single Class 1E circuit breaker and a cable which is identified and routed as Prime to the input of the non-Class 1E inverter. Downstream of the inverter these TDAS circuits are routed as non-Class 1E and not Prime. This design is justifiable since the TDAS Inverter has inherent design features which limit inverter output current. Current limiting is provided by multiple, inverter internal series circuit protective devices and an overcurrent sensing network which limits the unit output current to 125% of rated with a downstream fault;

b. The following normally open manual transfer switches connect alternate Class 1E power supplies to non-Class 1E buses whose downstream circuits are non-Class 1E.

1. Inverter IN-1 alternate supply is identified and routed as Prime to the transfer switch and as non-Class 1E downstream of the switch;

2. 480-V ac bus MC-8A-2C alternate power supply is identified and routed as Prime to the transfer switch; downstream circuits are routed is non-Class 1E; and

3. 480-V ac alternate supply from MC-7AA to the backup transformer for the cooling water cooling fan is identified and routed as Prime to the transfer switch; downstream the circuit is identified and routed as non-Class 1E.

Since the above described Prime circuits are isolated by manual transfer switches which are, by procedure normally open and thus assumed to be open during an accident, it is justifiable to allow downstream circuits to be identified and routed as non-Class 1E, and not Prime; and

c. The security system's critical power comes from a Class 1E source for reliability. The power supply is routed as Prime from a Class 1E circuit protective device at the Class 1E bus to a non-Class 1E bus, E-DP-SS/SL81 with two non-Class 1E breakers. Downstream of E-DP-SS/SL81, the cables are all non-Class 1E security circuits routed in security raceways that contain no Class 1E circuits. Similarly the Technical Support Center (TSC) receives its power supply from a Class 1E source for reliability. The power supply circuit

is routed as Prime from a Class 1E circuit protective device at the Class 1E bus to a non-Class 1E incoming breaker at the TSC MCC. Downstream of the TSC incoming breaker the circuits are identified and routed as non-Class 1E. In that the TSC received its power from a single Class 1E supply, the design serves, by itself, as a means of separation of TSC circuits from redundant division circuits. The routing and identification of the circuits downstream of the TSC incoming breaker need only comply with non-Class 1E separation criteria, i.e., no redundant division circuits are within the TSC. As in 3A above, these circuits are reviewed to ensure that direct bridging between redundant division raceways does not occur. Additionally, justifications a, b, c, and f of Category 1A apply.

8.3.1.4.4.2 Categories of Associated Circuits Treated as Class 1E. The following categories of associated circuits exist and are illustrated in Figure 8.3-51.

Category 4A: Associated instrumentation and control circuits that are connected to non-Class 1E power and routed in Class 1E raceways and/or enclosures and may have a continuing section in a non-Class 1E raceway (Category 1A).

Category 4B: Associated power circuits that are connected to non-Class 1E power and routed in Class 1E raceways and/or enclosures and may have a continuing section in a non-Class 1E raceway (Category 2A).

Category 4C: Associated instrumentation and control circuits that are supplied Class 1E power are routed in Class 1E raceways, are not isolated on accident signal, and may have a continuing section in a non-Class 1E raceway (Category 1B).

Category 4D: Associated power circuits that are connected to Class 1E power, are routed in Class 1E raceways, are not isolated on accident signal and may have a continuing section in a non-Class 1E raceway (Category 2B).

The design features of all associated circuits are in accordance with Section 8.3.1.4.2.1. The non-associated circuit portions of the cable routes are analyzed in Section 8.3.1.4.4.1.

8.3.1.4.4.3 Specific Deviations to Separation Criteria - Reactor Protection System Power Supply. See Reference 8.3-2.

8.3.2 DIRECT CURRENT POWER SYSTEMS

8.3.2.1 Description

The principal elements of the Class 1E dc power systems are shown in Figure 8.3-52. The systems consist of three electrically independent and separate 125-V batteries (Divisions 1, 2, and 3), two ±24-V batteries (Divisions 1 and 2), one 250-V battery (Division 1) and associated auxiliary equipment.

One non-Class 1E 125-V dc power supply system is provided in the radwaste building to supply non-Class 1E power, control, and instrumentation loads.

Two non-Class 1E 125-V dc (Divisions A and B) power supply systems are located at the makeup water pump house to provide local control power.

One non-Class 1E 405-V dc power supply system is provided in building 62 for the security system.

All non-Class 1E loads supplied by the Class 1E dc power systems are connected to Class 1E dc power supplies through Class 1E isolation devices. Any overcurrent conditions that could occur in the non-Class 1E portions of the system are isolated by the Class 1E devices without affecting the availability of the power supply. These Class 1E protective devices are discussed further in Section 8.3.2.2.1.1. Wiring to the non-Class 1E loads from the Class 1E power supplies are designated as prime circuits and are routed in accordance with separation criteria defined in Section 8.3.1.4.

An analysis of the consequences of a total loss of dc buses (Class 1E) S1-1, S1-2, or S2-1 for operating and shutdown modes is addressed in Chapter 15 accident analyses. The conclusion of this analysis is that previously reported limits of minimum critical power ratio (MCPR), peak vessel and main steam line pressures, and peak fuel cladding temperature for the expected operational occurrence category of events would not be exceeded as a result of common power source failures. Furthermore no situation exists where a single bus power failure would prevent plant personnel from achieving a reactor cold shutdown condition. This conclusion is based primarily on the analysis results which delineate that no single bus supplies power to all three shutdown paths. In most cases, single buses are active in only one shutdown path.

Table 8.3-9 indicates the switchgear and MCCs which are supplied with dc control power by the various dc power systems.

The battery chargers for the Divisions 1 and 2 (Class 1E) dc power systems will remain stable while supplying the load even if the batteries are disconnected. The load on the charger has to be more than 10% of its rating under this condition. When the battery is disconnected from the charger, there is a possibility that the ripple in the charger output is more than 100 mV.

There are no normal modes of plant operation where the battery will be disconnected from the charger and load. The charger and the battery will be connected for applying equalizing charges.

During service and performance tests of the batteries which are normally performed during refueling outage, the batteries for 250-V and 125-V systems are disconnected from the charger and load. For the 24-V system, the charger is shut down for service and performance tests of the batteries. During this period, the 24-V battery carries the load.

Plant maintenance procedures require that the chargers be disconnected from their respective batteries and loads during maintenance checks of the charger low and high voltage level alarms and the high level shunt trip. The chargers for 250-V and 125-V Divisions 1 and 2 dc systems remain stable under this condition but additional capacitive load is connected to the output of the 24-V charger to stabilize the output.

The design of the battery chargers provides assurance that safety-related equipment will be protected from damaging overvoltages as a result of faulty charger voltage regulation or operator error by alarms and a high voltage shutdown feature. Normal system float voltage is 2.25 V per cell. Should the voltage increase approximately 5 to 8%, a high voltage alarm is sounded. At approximately 10-12% above float voltage, the high voltage shutdown relay trips the charger output breaker, disconnecting the charger from its respective bus, thus protecting the equipment from further voltage increase. The controls for these alarm/trips are located inside the respective battery charger cabinet precluding inadvertent operator error.

Table 8.3-10 is a summary of the Class 1E battery duty cycles based on anticipated operations required during LOOP with coincident LOCA conditions.

8.3.2.1.1 125-Volt Direct Current Divisions 1 and 2 Systems

8.3.2.1.1.1 General. Two separate and independent Class 1E, 125-V dc systems are provided to power the safety-related (ESF) load groups of Divisions 1 and 2. Each of the batteries has two, full capacity, battery chargers sized to carry normal and postaccident steady dc loads, while simultaneously recharging the battery from its discharged state (1.81-V per cell) to its fully charged state (charging current has stabilized) within 24 hr. The battery chargers receive 480-V ac input power from their respective Divisions 1 and 2 480-V MCCs. For each division, one charger will be on line while the other will normally be available for service if the on-line charger fails or has to be removed from service.

8.3.2.1.1.2 Batteries. In the event of a loss or interruption of charger 125-V dc output, the station batteries will maintain power to their respective dc systems. The ampere-hour capacity and short time rating of all batteries are in accordance with IEEE 308-1974. They are capable

of supplying, (based on duty cycle calculations for a simultaneous LOOP and LOCA), dc power required to safely shut down the plant. The battery is conservatively sized based on the charger not being available for 2 hr even though this condition is not a requirement for any analyzed DBE at CGS.

The capability of the 125-V Divisions 1 and 2 batteries to supply SBO loads for a 4-hr coping period is discussed in Appendix 8A.

The 125-V dc, station batteries E-B1-1 (Division 1) and E-B1-2 (Division 2) each consist of 58 cells.

The capacity of batteries E-B1-1 and E-B1-2 is 1190 ampere-hours (based on an 8-hr discharge to 1.81 V per cell) which is equivalent to a battery terminal voltage of 105 V dc.

The nominal "float-voltage" for these batteries is 2.25 V per cell, and the "end-of-discharge" voltage is 1.81 V per cell.

8.3.2.1.1.3 Chargers. The chargers for each Divisions 1 and 2 125-V dc load group are supplied from separate 480-V ac MCCs associated with each division. Each charger is capable of carrying the largest combined demand of the various steady state dc loads for its division while simultaneously recharging the battery from its discharged state (1.81 V per cell) to its fully charged state (charging current has stabilized) in 24 hr. The charger size and instrumentation conform to the requirements of IEEE 308-1974 and Regulatory Guide 1.32, Revision 2. The chargers are capable of supplying the 125-V dc power requirements during all modes of plant operation. The Divisions 1 and 2 battery chargers (chargers C1-1A and 1B and C1-2A and 2B, respectively) are rated 200 amps dc output. The old 125 V dc charger E-C1-1, (formally Division 1) is disconnected and spared in place for use as temporary power.

8.3.2.1.2 High-Pressure Core Spray (Division 3) 125-Volt Direct Current System

8.3.2.1.2.1 General. The objective of the HPCS 125-V dc (Division 3) system is to provide a reliable, continuous, and independent 125-V dc power source of control and motive power as required for the HPCS system logic, HPCS diesel generator set control and protection, and all Division 3 related control. Figure 8.3-52 shows the 125-V dc one-line diagram. The system is classified as Class 1E. The Division 3 125-V dc system is independent of all other divisional batteries and there is no manual or automatic connection to any other battery. The battery is not shared with any other unit. The 125-V dc power is required for HPCS diesel generator field flashing, control logic, control, and switching functions of 4.16-kV breakers.

8.3.2.1.2.2 Battery and Charger. The 125-V dc system for the HPCS power supply has a 58-cell 125-V dc battery, one battery charger, and a distribution panel.

The 125-V dc system is designed as Class 1E equipment in accordance with applicable clauses of IEEE 308-1974. It is designed so that no single failure in the 125-V dc system will result in conditions that prevent safe shutdown of the plant. The plant design and circuit layout from these dc systems provide physical separation of the equipment, cabling, and instrumentation essential to plant safety.

The 125-V dc battery and its charger and distribution panel are shown in Figure 8.3-52. All components of the system are located in the HPCS diesel generating area of the diesel generator building.

8.3.2.1.2.3 Battery Capacity. The ampere-hour capacity (96 AH at 8 hr) and short time rating of the battery are in accordance with criteria given in IEEE 308-1974 and are adequate to supply all electrical loads required until ac power is restored for the operation of the battery chargers. The battery is conservatively sized based on the charger not being available for 2 hr even though this condition is not a requirement for any analyzed DBE at CGS. See SBO discussion in Appendix 8A. Capacity is large enough to cope with LOCA conditions or any other emergency shutdown. Each distribution circuit is capable of transmitting sufficient energy to start and operate all required loads in that circuit. The 125-V battery is sized in accordance with the principles set out in IEEE 308-1974.

8.3.2.1.2.4 Charger. The charger for the 125-V dc system is supplied by the 480-V HPCS MCC (via the engine generator control panel). It is rated 50 amp dc and is capable of carrying the largest combined demand of the various direct current system loads while simultaneously recharging the battery from its discharged state (1.81 V per cell which is equivalent to a battery terminal voltage of 105 V dc) to a fully charged state (charging current has stabilized) within 24 hr.

During an ESBO scenario that extends beyond the 4 hour coping time of a SBO or during a non-DBA LOOP scenario, the Class 1E 125-V Division 1 and Division 2 battery chargers may be supplied by alternative sources. 1) The Division 3 HPCS diesel generator may be cross connected from SM-2 to either Division 1 through SM-1 or Division 2 through SM-3. 2) The opposite division may be connected to a 400 kW diesel generator connected to either the Division 1 or the Division 2 480V safety bus.

8.3.2.1.3 ±24-Volt Direct Current (Divisions 1 and 2) Systems

8.3.2.1.3.1 General. Two separate and independent Class 1E, ±24-V dc systems are provided to power the Divisions 1 and 2 main control room equipment as indicated in Figure 8.3-52. Each ±24-V battery has two 12-cell 24-V banks connected in series with

common point grounded. Each bank is provided with a solid-state battery charger which receives 120-V ac input power from its respective Division 1 or 2 120-V ac vital power panel.

8.3.2.1.3.2 Batteries. In the event of a loss or interruption of charger 24-V dc (plus or minus) output, the batteries will maintain power to their respective dc systems for at least 2 hr. The ampere-hour capacity of each battery is 150 AH at 8 hr. This exceeds the NSSS vendor's requirements for units sized 60 AH at 4 hr. Circuit loads are indicated in Figure 8.3-52, dc one line diagram.

8.3.2.1.3.3 Chargers. The chargers for each ±24-V dc load group (four chargers total) are supplied from 120-V ac vital power panels associated with each division. Each charger is capable of carrying the largest combined demand of the various steady state dc loads while simultaneously restoring the battery from its discharged state (1.75 V per cell which is equivalent to a battery terminal voltage of 21 V dc) to its fully charged state (charging current has stability) in 24 hr. The charger size and instrumentation conform to the requirements of IEEE 308-1974 and Regulatory Guide 1.32, Revision 2. The ±24-V dc Division 1 (CO-1A, CO-1B) and Division 2 (CO-2A, CO-2B) chargers are rated 25 amps dc output.

8.3.2.1.4 250-Volt Direct Current (Division 1) System

8.3.2.1.4.1 General. One Class 1E 250-V dc system is provided to supply 120/240-V ac power on an uninterruptible basis to plant controls, instrumentation, computer and communication equipment via a solid state inverter. It also supplies 250-V dc power directly to reactor core isolation cooling (RCIC), selected RHR and reactor water cleanup (RWCU) system MOVs and the main and feedwater turbines auxiliary oil pumps. See Figures 8.3-5 and 8.3-52.

The cabling to the main 250-V dc distribution panel, the panel, battery, charger, and incoming 480-V ac normal source are Class 1E (Division 1).

8.3.2.1.4.2 Battery. In the event of a loss or interruption of charger 250-V dc output, the battery will maintain power to its dc system loads. The amp rating and short time rating of the battery is in accordance with IEEE 308-1974. The battery is capable of supplying (based on duty cycle calculations for a simultaneous LOOP and LOCA) dc power required to safely shut down the plant. The battery is conservatively sized based on the charger not being available for 2 hr even though this condition is not a requirement for any analyzed DBE at CGS.

The battery consists of two parallel strings of 116 cells (total of 232 cells) and has a capacity of 2380 AH (based on an 8 hr discharge to 1.81 V per cell which is equivalent to a battery terminal voltage of 210 V dc).

8.3.2.1.4.3 Charger. The charger for the 250-V dc system is supplied from a Class 1E 480-V ac MCC and is capable of carrying the largest combined demand of the various steady-state loads while simultaneously restoring the battery from its discharged state (1.81 V per cell) to its fully charged state in 24 hr. The charger size and instrumentation conform to the requirements of IEEE 308-1974 and Regulatory Guide 1.32, Revision 2. The active charger (C2-1) is rated at 400 amps output.

During an ESBO scenario that extends beyond the 4 hour coping time of a SBO or during a non-DBA LOOP scenario, the Class 1E 250-V Division 1 battery charger may be supplied by alternative sources. The Division 3 HPCS diesel generator may be cross connected from SM-2 to Division 1 through SM-1 or a 400 kW diesel generator connected to the Division 1 480V safety bus.

8.3.2.1.5 Non-Class 1E Direct Current Systems

8.3.2.1.5.1 Main Plant 125-Volt Direct Current (Non-Class 1E) System.

8.3.2.1.5.1.1 General. The main plant non-Class 1E 125-V dc system is designed to supply the majority of the plant non-Class 1E 125-V dc loads. Selected 125-V dc non-Class 1E loads are supplied by one or the other of two Class 1E 125-V dc batteries through isolation devices. The battery is provided a solid-state battery charger which is fed from a non-Class 1E 480-V ac source. During an ESBO or a non-DBA LOOP, its source power may be transferred from its normal power source to a Division 2 power source.

8.3.2.1.5.1.1.1 Battery (B1-7). The battery has 58 cells which are floated to 2.25 V per cell. It is rated at 1190 amp hr at an 8-hr discharge rate down to 1.81 V per cell.

8.3.2.1.5.1.1.2 Charger (C1-7). The battery charger is a three phase, thyristor controlled, constant potential battery charger. It is unique in that it has two separate power supply sources. It is normally powered from MC-6B. However, during an ESBO or a non-DBA LOOP, its source power may be transferred from MC-6B to MC-8A. This transfer is accomplished by repositioning two locked, manual transfer switches located near the battery charger. The keys for the locked manual transfer switches are administratively controlled.

8.3.2.1.5.2 Makeup Pump House 125-Volt Direct Current (Non-Class 1E) System.

8.3.2.1.5.2.1 General. The Divisions A and B 125-V dc non-Class 1E loads of the makeup water pump house are fed from two non-Class 1E batteries.

B1-3 and B1-4. Each battery is provided with a charger which is fed from a 480/120-V transformer connected to an MCC of a compatible division.

8.3.2.1.5.2.2 Batteries (B1-3 and B1-4). The batteries are rated for 94 amp-hr based on an 8-hr discharge rate of 1.81 V per cell.

8.3.2.1.5.2.3 Chargers (C1-3 and C1-4). The battery chargers are each sized 25 amps at 125 V dc.

8.3.2.1.5.3 405-Volt Direct Current (Non-Class 1E) System.

8.3.2.1.5.3.1 General. The 405-V dc system is located in building 62. It is provided with an inverter/charger (IN-4) which is supplied from a Class 1E 480-V ac source.

8.3.2.1.5.3.2 Battery (B1-6). The battery is made up of 180 cells in series and floated at 2.25 V per cell. Its 1-hr discharge rate is 601.3 amps down to a minimum voltage of 1.75 V per cell. This discharge rate supports the 1-hr emergency load cycle for this battery.

8.3.2.1.5.3.3 Charger. The battery charger portion of the security system inverter (IN-4) is sized to supply the emergency and normal loads and at the same time charge the battery from its minimum charge of 1.75 V per cell to its fully charged state in 24 hr.

8.3.2.1.6 Ventilation

Batteries for Divisions 1 and 2 are located in separate rooms within the radwaste/control building. The battery for Division 3 is located in the diesel generator building. Each room is ventilated by separate exhaust fans to remove gases produced during the battery charging cycle. Battery rooms have no common ventilation ducts. Failure of the HVAC system of each battery room is annunciated. A portable exhaust fan is provided to service a battery room with a failed ventilation system.

8.3.2.1.7 Testing and Maintenance

8.3.2.1.7.1 Periodic Maintenance Testing. Periodic maintenance tests will be performed in accordance with IEEE 308-1974, 450-2002, with the exception noted in Section 8.3.2.1.7.2, 8.3.2.1.7.3, and Regulatory Guide 1.32, Revision 2, on all components of the dc systems to determine the condition of each individual subsystem. Battery and battery chargers will be tested and inspected in accordance with Technical Specifications requirements. The following tests/inspections shall be made:

a. Visual inspection of system and electrical connections;

b. Liquid level of each cell;

c. Voltage and temperature of the pilot cell of each battery;

d. The voltage and specific gravity of each cell, and the temperature of selected cells; and

e. Performance discharge and service tests will be performed in accordance with IEEE 450-2002. The voltage of each cell will be taken and logged after discharge.

For Class 1E dc system components, the manufacturer has either performed operational tests or calculated data which substantiate the capability of the equipment to carry their dc postaccident (worst case) loads. Seismic and environmental qualification is discussed in Sections 3.10 and 3.11.

Preoperational testing, as described in Section 14.2, was performed to verify that all components, automatic and manual controls, and functions of the dc power systems perform as required.

8.3.2.1.7.2 Exceptions to Institute of Electrical and Electronics Engineers Standards. The following exceptions are taken to the requirements listed in Table 2 of IEEE 308-1974:

a. Battery float charging current will be measured in lieu of pilot cell specific gravity. Charging current and pilot cell voltage will be measured quarterly versus every week as recommended in the standard;

b. The cell voltage of all the cells will be measured quarterly versus every month as recommended in the standard;

c. Specific gravity of all cells will be measured annually versus every month as recommended in the standard;

d. A visual inspection will be performed quarterly versus every week as recommended in the standard;

e. A performance test will be performed at least once every 5 years versus every 3 years as recommended in the standard; and

f. Battery float charging current and voltage will be measured and logged on a monthly basis versus every week as recommended in the standard.

8.3.2.1.7.3 The following exceptions are taken to the requirements listed in IEEE 450-2002.

a. When any cell electrolyte reaches the low-level line, water will be added to bring the cells to the middle of high-low mark versus to bring the cells to the high-level line as recommended by Section 5.3.1.a of IEEE 450-2002; and

b. Section 5.2.1 of IEEE 450-2002 – Monthly inspections of the battery on a regularly scheduled basis will be performed quarterly versus monthly as recommended in the standard for the following:

1) Float voltage measured at battery terminals
2) General appearance and cleanliness of the battery
3) Charger output current and voltage
4) Electrolyte levels
5) Cracks in cells or evidence of electrolyte leakage
6) Any evidence of corrosion at terminals, connectors, racks, or cabinets
7) Ambient temperature and ventilation
8) Pilot-cells (if used) voltage and electrolyte temperature
9) Battery float charging current or pilot cell specific gravity.

8.3.2.2 Analysis

8.3.2.2.1 Compliance to Criteria

8.3.2.2.1.1 General. In accordance with GDC 17, IEEE 308-1974, and Regulatory Guide 1.6, Revision 0, redundancy and independence of dc power sources and distribution equipment are provided by the separate Divisions 1 and 2 (Class 1E) battery systems. Each dc system has sufficient capacity to supply the dc power requirements of the redundant (Divisions 1 and 2) load groups for at least 2 hr following loss of power to the charger coincident with a DBA. This redundancy extends from the batteries and battery chargers through distribution panels, cabling, switchgear, and protective devices.

The HPCS dc power system is a separate and independent safety-related (Class 1E) system comprising Division 3. The Division 3 dc loads serve a separate safety function not provided by Division 1 or 2 directly. However, the automatic depressurization system (ADS), working with the LPCS, or low-pressure coolant injection (LPCI) systems supplied via Divisions 1 and 2, can compensate for the loss of the entire Division 3 system.

There are no electrical connections between the dc buses for Division 1, 2, and 3, and there is no automatic or manual transfer of load between divisions. The elimination of ties between dc systems prevents a single failure from affecting more than one division.

Selected non-Class 1E loads are connected to the Class 1E power supplies. This does not degrade the Class 1E power supplies based on the following:

a. All non-Class 1E loads are connected to Class 1E power supplies through Class 1E isolation devices. Any overcurrent condition that could occur in the non-Class 1E portions of the system are isolated by these Class 1E devices without affecting the availability of the power supply. These Class 1E protective devices are either a circuit breaker shunt, tripped on a LOCA signal, or one or two series overcurrent devices such as fuses or circuit breakers. The overcurrent devices trip on overloads, line-to-line and double line-to-ground faults on all dc systems. They also trip on single line, line-to-line ground faults on solidly grounded systems;

   The power source shall supply the necessary fault current to ensure proper coordination of the circuit's Class 1E isolation device without loss of function of Class 1E loads;

b. Periodic surveillance procedures ensure protective device trip setpoints to be within acceptable limits for proper coordination with the main circuit protective device;

c. Wiring to the non-Class 1E loads from the Class 1E power supplies is designated as prime circuits, and is routed in accordance with separation criteria defined in Section 8.3.1.4; and

d. The Class 1E power supplies are sized adequately to supply all Class 1E and non-Class 1E loads connected to them.

8.3.2.2.1.2 Divisions 1 and 2 125-Volt, ±24-Volt, and 250-Volt Direct Current Systems. The Divisions 1 and 2 dc power systems have been designed in compliance with IEEE 308-1974. Components of the systems are located in the radwaste/control building, a Seismic Category I structure. This ensures that any design basis event as listed in IEEE 308-1974, Table I, will not cause loss of dc power and jeopardize the safety of the reactor or cause damage to the reactor coolant system. The dc buses and the associated equipment are located such that redundant counterparts are physically separated from each other. There are no dc ties between redundant ESF equipment such as switchgear or motors. Therefore, no single failure of any dc component can adversely affect the operation of the redundant dc systems.

The chargers are on diesel generator supplied buses so that during LOOP, with diesel generators operating, the batteries will be required to carry their loads for short periods only. Alarms are provided in the main control room for low dc bus voltage on the 125-V and 250-V buses.

Low ±24-V dc alarms are communicated via the main control room computer.

The Divisions 1 and 2 dc power systems satisfy the requirements of Regulatory Guide 1.32, Revision 2, not only in their adherence to IEEE 308-1974 but also as follows:

a. The battery chargers are sized as described in Section 8.3.2.1 to meet load and recharging requirements, and

b. Battery performance discharge tests and battery service tests are scheduled in accordance with IEEE 450-2002.

The dc power systems are designed to permit periodic inspection and test of important areas such as wiring, insulation, connections, and switchboards, and thus comply with GDC 18.

Control room instrumentation and alarms are provided for each battery and battery charger to monitor the status of each power supply in accordance with IEEE 308-1974 and Regulatory Guide 1.47. This instrumentation includes indication of the main bus voltage, battery current (charge and discharge), and battery charger current. Alarms through the control room annunciator and computer are provided for the following abnormal conditions: bus undervoltage, dc system ground fault (for ungrounded systems), battery fuse blown, battery charger over/undervoltage, and battery charger ac failure. Charger and battery disconnect switches are provided with position indication and group alarm in the control room.

Battery high discharge rate is not separately alarmed. In the absence of an electrical fault and with battery charger available, all normal and emergency steady state loads are carried by the battery charger. For the 125-Volt and 250-Volt Direct Current Systems, the battery charger operates in a current-limiting mode of 115% of its full load rating and any overcurrent in excess is supplied by the battery. For the 24-Volt Direct Current Systems, the battery charger operates in a current-limiting mode between 110% to 125% of its full load rating and any overcurrent in excess is supplied by the battery. However, the feeder circuit fuses are sized to trip on overcurrents of this magnitude, thereby preventing battery high discharge current to continue to the point of degrading the system. Annunciation of the isolated Class 1E circuit is made for each connected load. Failure of the battery charger also causes a battery high discharge as discussed above.

8.3.2.2.1.3 High-Pressure Core Spray (Division 3) 125-Volt Direct Current System. The 480-V ac feed to the HPCS battery charger is from the HPCS MCC via the engine generator control panel. Separation between Division 3 and other independent systems is maintained and the power provided to the chargers can be from either offsite or onsite sources. The HPCS dc system is arranged so that the probability of a system failure resulting in loss of dc power is extremely low. Important system components are either self-alarming on failure or capable of being tested during service to detect faults. All abnormal conditions of selected system parameters important to surveillance of the system annunciate in the main control room. Cross connections with other independent 125-V dc systems do not exist.

Control room instrumentation and alarms for the HPCS are similar to those of the Divisions 1 and 2 dc systems as discussed in Section 8.3.2.2.1.2.

Components of the system are located in the diesel generator building, a Seismic Category I structure.

The dc power supply to switchgear circuit breakers in the Division 3 load group is from the Division 3 battery. There are no connections between dc systems of different divisions, thereby ensuring that no single failure in one dc system can affect power systems of other divisions.

8.3.2.2.1.4 Non-Class 1E Direct Current Systems. There are no specific safety design requirements for the non-Class 1E dc systems other than those required for a reliable operation and for good system operability and maintainability.

8.3.2.2.2 Service Environment

All components of Class 1E dc systems, with the exception of some distribution and control cables and control devices, are located outside of primary containment.

Components located in normally air conditioned areas are either designed to continue operating in the event of loss of air conditioning or a Class 1E air conditioning system is provided (see Section 3.11.4).

See Section 3.11 for discussion of environmental design and analysis of Class 1E electrical components for postaccident conditions and to Section 3.10 for seismic conditions.

8.3.2.3 Physical Identification of Safety-Related (Class 1E) Equipment

The safety-related equipment for each division of the Class 1E dc power system is discussed in Section 8.3.1.3.

8.3.2.4 Independence of Electrical Divisions

Spatial separation and/or placement of physical barriers between different divisions of the dc power system is used as a protection against loss of the redundant dc load groups from a single event. Electrical separation is provided as described in Section 8.3.1.4.

The Class 1E batteries and battery chargers of redundant divisions are located separately from one another in Seismic Category I rooms with no common ventilation connections. Redundant dc distribution panels and 480-V MCCs are located at sufficient distance apart to prevent any single credible event from causing the loss of more than one panel or MCC. Cable trays,

cables, and control circuitry for the three divisions (1, 2, and 3) are also separated as described in Section 8.3.1.4.

8.3.3 FIRE PROTECTION FOR CABLE SYSTEMS

8.3.3.1 Resistance of Cables to Combustion

See Section F.3.

8.3.3.2 Localization of Fires

See Section F.3.

8.3.3.3 Detection and Protection Systems

See Section F.3.

8.3.4 REFERENCES

8.3-1 NEDO-10905-3, HPCS Power Supply Topical Report.

8.3-2 WNP-2 Electrical Separation Design Requirements (Design Specification for Division 200, Section 201).

8.3-3 NEDO-10466A, PGCC Licensing Topical Report.

8.3-4 "AC Electrical Distribution System," Design Basis Document, Section 317-AC.

8.3-5 "DC Electrical Distribution System," Design Basis Document, Section 317-DC.

8.3-6 Letter, GO2-07-139, D.W. Coleman to NRC, "Clarification on the Role of Reactor Core Isolation Cooling During a Station Blackout for Columbia Generating Station," dated September 13, 2007.

NOTE: The italicized information below is historical and is no longer updated in the FSAR. For the Division 1 Diesel Generator Loading refer to calculation E/I-02-91-03 and its outstanding Calculation Modification Records (CMRs)

Table 8.3-1

Division 1 Diesel Generator Loading
Automatic Loading of Engineered Safety Systems Bus[j]

	Item Description	No. on Bus	Total hp/kW Connected to Bus	Shutdown With Loss of Offsite Power				LOCA With Loss of Offsite Power			
				No. Req'd Part of Set P/O	Time to Start[a]	Time to Stop	kW	No. Req'd Part of Set P/O	Time to Start[a]	Time to Stop	kW
1)	Motor operated valves[b]	Set	200.0 kW	Set	0 sec	(c)	---	Set	0 sec	(c)	---
2)	Emergency lighting and power panels[d]	Set	120.9 kW	Set	0 sec	(e)	120.9	Set	0 sec	(e)	113.7
3)	Power panels (1E)	Set	27.2 kW	Set	0 sec	(e)	27.2	Set	0 sec	(e)	27.2
4)	Diesel auxiliaries and HVAC	Set	150.2 kW	Set	0 sec[e,f]	(e,f)	150.2	Set	0 sec[e,f]	(e,f)	150.2
5)	Low pressure core spray water leg pump	1	10/8.4 kW	1	0 sec[e]	(e)	8.4	1	0 sec[e]	(e)	8.4
6)	Standby liquid control pump	1	40/29.1 kW	---	---	---	---	---	---	---	---
7)	Reactor core isolation cooling water leg pump	1	15/5.6 kW	1	0 sec[f]	(f)	5.6	1	0 sec[f]	(f)	5.6
8)	Fuel pool recirculation pump	Set	55/35.8 kW	Set	0 sec[f]	(e)	35.8	Set	0 sec[f]	(e)	35.8
9)	Plant service water pump A[d]	1	1500/1176.7 kW	1	10 sec	(e)	1176.7	---	---	---	---
10)	Low-pressure core spray pump	1	1500/1164.4 kW	---	---	---	---	1	0 sec	(e)	1164.4
11)	Residual heat removal pump A	1	900/644.1 kW	1	10 min[e]	(e)	(644.1)	1	5 sec	(e)	644.1
12)	Standby service water pump	1	1750/1317.2 kW	1	(g)	(e)	1317.2	1	(g)	(e)	1317.2
13)	Cooling tower makeup water pump[d]	2	1600/1280.3 kW	1	(e,h)	(e)	(640.2)	---	---	---	---
14)	Control rod drive pump[d]	1	250/203.5 kW	1	(e)	(e)	(203.5)	---	---	---	---
15)	Reactor closed cooling pump[d]	1	200/157.1 kW	1	0 sec	(e)	157.1	---	---	---	---
16)	Load center transformer losses TR-7/71 and –7/73	2	40.3 kW	2	0 sec	Cont	40.0	2	0 sec	Cont	40.3
17)	250-V battery charger	1	85.4 kW	1	0 sec	(e)	85.4	1	0 sec	(e)	85.4
18)	125-V battery charger	1	27.8 kW	1	0 sec	(e)	27.8	1	0 sec	(e)	27.8
19)	Uninterruptible power supply[d] E-IN-1	1	32.5 kW	1	0 sec	(e)	32.5	1	0 sec	(e)	32.5
20)	Standby gas treatment fans and heater coils	Set Set	57.5/47.5 kW 45.5 kW	--- ---	--- ---	--- ---	--- ---	1 2	30 sec 20 sec	(e) (f)	47.5 45.5
21)	Reactor protection system motor-generator set[d]	1	25/20.2 kW	1	0 sec	(e)	20.2	1	(e)	(e)	20.2

NOTE: The italicized information below is historical and is no longer updated in the FSAR. For the Division 1 Diesel Generator Loading refer to calculation E/I-02-91-03 and its outstanding Calculation Modification Records (CMRs)

Table 8.3-1

Division 1 Diesel Generator Loading
Automatic Loading of Engineered Safety Systems Bus[j] (Continued)

				Shutdown With Loss of Offsite Power				*LOCA With Loss of Offsite Power*			
	Item Description	*No. on Bus*	*Total hp/kW Connected to Bus*	*No. Req'd Part of Set P/O*	*Time to Start[a]*	*Time to Stop*	*kW*	*No. Req'd Part of Set P/O*	*Time to Start[a]*	*Time to Stop*	*kW*
22)	*Drywell cooling and fans*	*Set*	*242.5/199.0 kW*	*P/O Set*	*0 sec*	*(e)*	*32.3*	*P/O Set*	*0 sec*	*(e)*	*32.3*
23)	*Control air compressor[d]*	*1*	*100/81.8 kW*	*1*	*0 sec*	*(e)*	*81.8*	*1*	*0 sec*	*(e)*	*81.8*
24)	*Reactor building electrical equipment HVAC*	*Set*	*335.6 kW*	*Set*	*0 sec[f]*	*(e)*	*13.5*	*Set*	*0 sec[f]*	*(e)*	*21.4*
25)	*Control building electrical equipment HVAC*	*Set*	*252.4 kW*	*Set*	*0 sec[e,f]*	*(e)*	*110.4*	*Set*	*0 sec[e,f]*	*(e)*	*109.4*
26)	*Makeup water pump house electrical equipment HVAC[d]*	*Set*	*80 kW*	*Set*	*(e,h)*	*(e)*	*(80)*	---	---	---	---
27)	*Standby service water pump house electrical equipment HVAC*	*Set*	*38.6 kW*	*Set*	*0 sec*	*(e)*	*38.6*	*Set*	*0 sec*	*(e)*	*38.6*
28)	*Control room emergency chiller[i]*	*Set*	*132.4 kW*	*Set*	*0 sec*	*(f)*	*132.4*	*Set*	*0 sec*	*(f)*	*132.4*
29)	*Security system power panels[d]*	*Set*	*52.5 kW*	*Set*	*0 sec*	*(e)*	*52.5*	*Set*	*0 sec*	*(e)*	*52.5*
30)	*TSC building electric equipment and heaters*	*Set*	*149.1 kW*	*Set*	*0 sec*	*(e)*	*149.1*	*Set*	*0 sec*	*(f)*	*139.1*
31)	*Miscellaneous auxiliaries*	---	*8.3 kW*	---	*0 sec*	*(e)*	*8.3*	*Set*	*0 sec*	*(e)*	*8.3*
				Total automatically applied 3823.7				*Total automatically applied 4381.4*			

( ) kW figures in parenthesis are for manually applied loads not added to total automatically applied loads.

[a] Time to start after bus voltage frequency have been established. Maximum time after signal to start generator for voltage to be established is 15 sec.
[b] Intermittent loads not included as long-term loading.
[c] Motors stop automatically when valve action is completed.
[d] Items are non-Class 1E.
[e] Start and/or stop manually.
[f] Start and/or stop automatically with associated pump or diesel, pressure, temperature switch, or flow.
[g] SW start time (after bus energization) is the sum of SW start timer (20 sec) and SW return valve open time to actuate the limit switch permissive.
[h] Load can be manually applied after the operator determines there is sufficient generator capacity.
[i] Operates automatically on chilled water demand.

NOTE: The italicized information below is historical and is no longer updated in the FSAR. For the Division 1 Diesel Generator Loading refer to calculation E/I-02-91-03 and its outstanding Calculation Modification Records (CMRs)

Table 8.3-2

Division 2 Diesel Generator Loading
Automatic Loading of Engineered Safety Systems Bus[j]

Item Description	No. on Bus	Total hp/kW Connected to Bus	Shutdown With Loss of Offsite Power				LOCA With Loss of Offsite Power			
			No. Req'd Part of Set P/O	Time to Start[a]	Time to Stop	kW	No. Req'd Part of Set P/O	Time to Start[a]	Time to Stop	kW
1) Motor operated valves[b]	Set	200.0 kW	Set	0 sec	(c)	---	Set	0 sec	(c)	---
2) Emergency lighting and power panels[d]	Set	138.6 kW	Set	0 sec	(e)	138.6	Set	0 sec	(e)	131.4
3) Power panels (1E)	Set	33.7 kW	Set	0 sec	(e)	33.7	Set	0 sec	(e)	33.7
4) Diesel auxiliaries and HVAC	Set	183.3 kW	Set	0 sec[e,f]	(f)	183.3	Set	0 sec[e,f]	(e,f)	183.3
5) Residual heat removal water leg pump	1	10/8.4 kW	1	0 sec	(e)	8.4	1	0 sec	(e)	8.4
6) Standby liquid control pump	1	40/29.1 kW	---	---	---	---	---	---	---	---
7) Standby liquid control tank heaters	2	50 kW	1	0 sec[f]	(f)	10.0	1	0 sec[f]	(f)	10.0
8) Fuel pool cooling and cleanup system	Set	55/35.8 kW	P/O set	0 sec[f]	(e)	35.8	P/O set	0 sec[f]	(e)	35.8
9) Plant service water pump B[d]	1	1500/1176.7 kW	1	10 sec	(e)	1176.7	---	---	---	---
10) Residual heat removal pump C	1	800/643.8 kW	1	(e,f)	(e)	(643.8)	1	0 sec	(e)	643.8
11) Standby service water pump	1	1750/1286.8 kW	1	(g)	(e)	1286.8	1	(g)	(e)	1286.8
12) Cooling tower makeup water pump[d]	2	1600/1280.3 kW	1	(e,h)	(e)	(640.2)	---	---	---	---
13) Control rod drive pump[d]	1	250/203.5 kW	1	(e)	(e)	(203.5)	---	---	---	---
14) Reactor closed cooling pump[d]	2	400/322.6 kW	1	0 sec	(e)	161.3	---	---	---	---
15) Load Center Transformer Losses TR-8/81 and -8/83[d]	2	39.1 kW	2	0 sec	Cont	39.1	2	0 sec	Cont	38.0
16) 125-V battery charger	1	26.1 kW	1	0 sec	(e)	26.1	1	0 sec	(e)	26.1
17) Standby gas treatment fans	Set	57.5/47.5 kW	---	---	---	---	1	30 sec	(e)	47.5
and heater coils	Set	45.5 kW	---	---	---	---	2	20 sec	(f)	45.5
18) Reactor protection system motor-generator set	1	25/20.2 kW	1	0 sec	(e)	20.2	1	(e)	(e)	20.2
19) Drywell cooling and fans	Set	393.5/285.3 kW	P/O set	0 sec	(e)	41.1	P/O set	0 sec	(e)	41.1

NOTE: The italicized information below is historical and is no longer updated in the FSAR. For the Division 1 Diesel Generator Loading refer to calculation E/I-02-91-03 and its outstanding Calculation Modification Records (CMRs)

LDCN-23-006

Table 8.3-2

Division 2 Diesel Generator Loading
Automatic Loading of Engineered Safety Systems Bus[j] (Continued)

Item Description	*No. on Bus*	*Total hp/kW Connected to Bus*	*Shutdown With Loss of Offsite Power*				*LOCA With Loss of Offsite Power*			
			No. Req'd Part of Set P/O	*Time to Start[a]*	*Time to Stop*	*kW*	*No. Req'd Part of Set P/O*	*Time to Start[a]*	*Time to Stop*	*kW*
20) Control air compressor and dryers[d]	*1*	*100/78.8 kW*	*1*	*0 sec*	*(e)*	*78.8*	*1*	*0 sec*	*(e)*	*78.8*
21) Reactor building electrical equipment, HVAC	*Set*	*333.2 kW*	*Set*	*0 sec[f]*	*(e)*	*11.3*	*Set*	*0 sec[f]*	*(e)*	*17*
22) Control building electrical equipment, HVAC	*Set*	*193 kW*	*Set*	*0 sec[f]*	*(e)*	*97.6*	*Set*	*0 sec[e]*	*(e)*	*97.6*
23) Makeup water pump house electrical equipment HVAC[d]	*Set*	*80 kW*	*Set*	*(e,h)*	*(e)*	*(80)*	---	---	---	---
24) Standby service water pump house	*Set*	*40.9 kW*	*Set*	*0 sec*	*(e)*	*40.9*	*Set*	*0 sec*	*(e)*	*40.9*
25) Control room emergency chiller[i]	*Set*	*134.8 kW*	*Set*	*0 sec*	*(f)*	*134.8*	*Set*	*0 sec*	*(f)*	*134.8*
26) Uninterruptible power supply[d] E-IN-5	*1*	*52.1 kW*	*1*	*0 sec*	*(e)*	*52.1*	*1*	*0 sec*	*(e)*	*52.1*
27) Security system power panels[d]	*Set*	*195.9 kW*	*Set*	*0 sec*	*(e)*	*195.9*	*Set*	*0 sec*	*(e)*	*195.9*
28) Miscellaneous auxiliaries	---	*7.4 kW*	---	*0 sec*	*(e)*	*7.4*	---	*0 sec*	*(e)*	*7.4*
29) Residual heat removal pump B	*1*	*900/717.3 kW*	---	---	---	---	*1*	*5 sec*	*(e)*	*717.3*
			Total automatically applied 3779.9				*Total automatically applied 3893.5*			

( ) kW Figures in parenthesis are for manual applied loads not added to the total automatically applied loads.

[a] Time to start after bus voltage frequency have been established. Maximum time after signal to start generator for voltage to be established is 15 sec.

[b] Intermittent loads not included as long-term loading.

[c] Motors stop automatically when valve action is completed.

[d] Items are non-Class 1E.

[e] Start and/or stop manually.

[f] Start and/or stop automatically with associated pump or diesel, pressure, temperature switch, or flow.

[g] SW start time (after bus energization) is the sum of SW start timer (20 sec) and SW return valve open time to actuate the limit switch permissive.

[h] Load can be manually applied after the operator determines there is sufficient generator capacity.

[i] Operates automatically on chilled water demand.

NOTE: The italicized information below is historical and is no longer updated in the FSAR. For the Division 1 Diesel Generator Loading refer to calculation E/I-02-91-03 and its outstanding Calculation Modification Records (CMRs)

Table 8.3-3

Division 3 Diesel Generator Loading
Automatic Loading of Engineered Safety Systems Bus[g]

Item Description	*No. on Bus*	*Total hp/kW Connected to Bus*	*Shutdown With Loss of Offsite Power*				*LOCA With Loss of Offsite Power*			
			No. Req'd Part of Set P/O	*Time to Start*[a]	*Time to Stop*	*kW*	*No. Req'd Part of Set P/O*	*Time to Start*[a]	*Time to Stop*	*kW*
1) High-pressure core spray pump (HPCS-P-1)	*1*	*3000/2306.7 kW*	---	---	---	---	*1*	*0 sec*	*(b)*	*2306.7*
2) Motor operated valves[c]	*Set*	*77/62 kW*	---	---	---	---	*Set*	*0 sec*	*(b)*	---
3) High-pressure core spray water leg pump (HPCS-P-3)	*1*	*10/8.4 kW*	*1*	---	*(b)*	*8.4*	*1*	*(b)*	*(b)*	*8.4*
4) High-pressure core spray service water pump (HPCS-P-2)	*1*	*60/47.6 kW*	*1*	*0 sec*	*(b)*	*47.6*	*1*	*0 sec*	*(b)*	*47.6*
5) Auxiliary panel (E-CP-DG/CP3)	*1*	*2.8 kW*	*1*	*0 sec*	*(d)*	*2.8*	*1*	*0 sec*	*(d)*	*2.8*
6) Diesel generator room exhaust fan (DEA-FN-31)	*1*	*50/40.8 kW*	*1*	*(d)*	*(d)*	*40.8*	*1*	*(d)*	*(d)*	*40.8*
7) Supply fans (DMA-FN-31)	*2*	*30/22.7 kW*	*1*	*(d)*	*(d)*	*22.7*	*2*	*(d)*	*(d)*	*22.7*
8) Fan coil unit (RRA-FN-4)	*1*	*10/8.4 kW*	---	---	---	---	*1*	*0 sec*	*(d)*	*8.4*
9) Instrument and control power (E-PP-4A)	*Pnl*	*2.4 kW*	*Pnl*	*0 sec*	*(b)*	*2.4*	*Pnl*	*0 sec*	*(b)*	*2.4*
10) Lighting panel (E-ELP-4A)[f]	*Pnl*	*9.3 kW*	*Pnl*	*0 sec*	*(b)*	*9.3*	*Pnl*	*0 sec*	*(b)*	*9.3*
11) Miscellaneous auxiliary (DO-P-2, DLO-P-12, POA-FN-2A)	*Set*	*3.9 kW*	*Set*	*0 sec*	*(b)*	*2.2*	*Set*	*0 sec*	*(b)*	*3.9*
12) Load center, transformer losses (E-TR-4/41)	*1*	*6.5 kW*	*1*	*0 sec*	---	*6.0*	*1*	*0 sec*	---	*6.5*
13) High-pressure core spray diesel room heater (DMA-EHC-32)	*1*	*35 kW*	*1*	*0 sec*	*(d)*	*35.0*	*1*	*0 sec*	*(d)*	*35.0*[e]
14) DMA supply fan (DMA-FN-32)	*1*	*11.8 kW*	*1*	*0 sec*	*(b)*	*11.8*	*1*	*0 sec*	*(b)*	*11.8*
15) Day tank room exhaust fan (DEA-FN-32)	*1*	*0.5 kW*	*1*	*(b)*	*(b)*	*0.5*	*1*	*(b)*	*(b)*	*0.5*
16) High-pressure core spray oil pump room heater (DRA-EUH-31)	*1*	*7.5 kW*	*1*	*0 sec*	*(d)*	*7.5*	*1*	*0 sec*	*(d)*	*7.5*[e]
			Total 197.0 kW				*Total 2514.3 kW*			

[a] *Time to start after bus voltage frequency have been established. Maximum time after signal to start generator for voltage to be established is 15 sec.*

[b] *Start and/or stop manually.*

[c] *Intermittent loads not included as long-term loading.*

[d] *Start and/or stop automatically with associated pump or diesel, pressure, temperature switch, or flow.*

[e] *Due to heat dissipation from the diesel, the room temperature exceeds 70°F (thermostat settings for DMA-EHC-32 and DRA-EUH-31 are 70°F and 50°F, respectively) within a few minutes. Hence, DMA-EHC-32 and DRA-EUH-31 are switched off within a few minutes. Therefore, these heaters are short-term load. However, for a conservative approach, these heater loads are included in the diesel loading.*

[f] *Non-Class 1E.*

Table 8.3-4

Motor and Motor Starter Voltage Requirements

Equipment	Nameplate Voltage	Minimum Requirement		Maximum Capability	
		Voltage	% NPV	Voltage	% NPV
6.9-kV motors (continuous operation)	6600 V	5940	90	7260	110
4.16-kV motors (continuous operation)	4000 V	3600	90	4400	110
480-V motors (continuous operation)	460 V	414	90	506	110
480-V starters (pickup)	480 V	341-408[a]	71-85	528	110
480-V starters (holding)	480 V	264	55	---	---

[a] Minimum pickup voltage varies between different manufacturers and model types.

Notes:

1. NPV indicates nameplate voltage of motors or starters for the particular voltage level.

2. Deviation from the minimum voltage requirements is permitted for Class 1E motors provided an analysis is performed and documented, to demonstrate that the motors can perform their safety function with the voltage supplied.

Table 8.3-5

Divisions 1 and 2
Standby Diesel Generator Annunciators

	Annunciation[a]	Location	
		Local	MCR[b]
1.	Diesel generator breaker 7-DG1 (8-DG2) trip	---	X
2.	Diesel generator breaker 7-DG1 (8-DG2) overcurrent lockout[c]	---	X
3.	Diesel generator breaker DG1-7 (DG2-8) close circuit undervoltage/test[c]	---	X
4.	Diesel generator breaker DG1-7 (DG2-8) trip	---	X
5.	Diesel generator No. 1 (No. 2) overspeed trip	X	X
6.	Diesel generator No. 1 (No. 2) lockout[d]	---	X
7.	Diesel generator No. 1 (No. 2) not in auto start	---	X
8.	Diesel generator breaker DG1-7 (DG2-8) switch in local or remote	---	X
9.	Diesel generator No. 1 (No. 2) failed to start	X	X
10.	Diesel generator 7-DG1 (8-DG2) ground	---	X
11.	Diesel generator No. 1 (No. 2) generator ground	---	X
12.	Diesel generator No. 1 (No. 2) generator field ground	---	X
13.	Diesel generator No. 1 (No. 2) local dc control power failure	---	X
14.	Diesel generator No. 1 (No. 2) vibration high	X	X
15.	Diesel generator No. 1 (No. 2) stator bearing temperature high	---	X
16.	Diesel generator No. 1 (No. 2) day tank oil level high	X	X
17.	Diesel generator No. 1 (No. 2) day tank oil level low	X	X
18.	Diesel generator No. 1 (No. 2) storage tank oil level high	---	X
19.	Diesel generator No. 1 (No. 2) storage tank oil level low	---	X
20.	Diesel generator No. 1 (No. 2) cable cooling flow low	---	X
21.	Diesel generator No. 1 (No. 2) auto start	---	X
22.	Diesel generator No. 1 (No. 2) local panel alarm[e]		X

Table 8.3-5

Divisions 1 and 2
Standby Diesel Generator Annunciators (Continued)

	Annunciation[a]	Location	
		Local	MCR[b]
23.	Diesel generator breaker 7-DG1 (8-DG 2) close circuit undervoltage/test[c]	---	X
24.	Engines for diesel generator No. 1 (DG 2) - cooling water low flow	---	X
25.	Diesel generator No. 1 (DG 2) room - cooling flow low	---	X
26.	Diesel generator No. 1 (No. 2) solenoid valve failure	X	---
27.	Diesel generator No. 1 (No. 2) lube oil pressure low	X	---
28.	Diesel generator No. 1 (No. 2) oil temperature high	X	---
29.	Diesel generator No. 1 (No. 2) crankcase press high	X	---
30.	Diesel generator No. 1 (No. 2) engine water level low	X	---
31.	Diesel generator No. 1 (No. 2) lube oil level low	X	---
32.	Diesel generator No. 1 (No. 2) oil temperature low	X	---
33.	Diesel generator No. 1 (No. 2) differential fuel pressure high	X	---
34.	Diesel generator No. 1 (No. 2) jacket water temperature high	X	---
35.	Diesel generator No. 1 (No. 2) jacket water temperature low	X	---
36.	Diesel generator No. 1 (No. 2) fuel oil pressure low	X	---
37.	Diesel generator No. 1 (No. 2) starting air receivers No. 1 and No. 2 pressure low	X	---
38.	Diesel generator No. 1 (No. 2) improper paralleling	---	X

[a] Independent drops are provided for Division 1 and Division 2 annunciators. Drop titles for the Division 2 annunciators are indicated by parentheses.

[b] Main control room - Board "C" (Panel P800).

[c] This function inputs into a BISI alarm that indicates the breaker is out of service.

[d] Diesel generating unit incomplete sequence and differential current signals trip the units via the unit lockout relays (item 6).

[e] All abnormal signals detected at the local diesel generator control panels provide input to the general (item 22) alarm.

Table 8.3-6

The italicized information is historical and was provided to support the application for an operating license.

Comparison of High-Pressure Core Spray Diesel Generators

Component	*Data*	
	LaSalle	*Columbia Generating Station*
Engine:		
Model	*EMD-20-645E4*	*EMD-20-645E4*
hp	*3600*	*3600*
Speed (rpm)	*900*	*900*
Generator:		
Model	*Ideal Electric-CO-SAB*	*GE - 264 x 730*
kVA	*3560*	*3560*
Volts	*3400/4160Y*	*2400/4160Y*
Hertz	*60*	*60*
Insulation	*Class B*	*Class B*
Moment of inertia (#-ft^2)	*36,000*	*32,450*[a]
Reactance (%)		
Subtransient (X"$_d$)	*7.1*	*10.9*[b]
Transient (X'$_d$)	*14.3*	*16.5*
Synchronous (X$_d$)	*112.0*	*82.0*
Time const (sec)		
T$_d$" (S-C)	*0.021*	*0.01*
T'$_{d+}$(O-C)	*3.5*	*2.87*
Regulator type	*Solid state*	*Solid state*
Exciter type	*Brushless rotary*	*Static with field flashing*
Governor		
Model	*Woodward UG-8*	*Woodward EGB-10*
Speed sensor	*Mechanical*	*Electronic*[c]
Error	*±1%*	*±0.25%*
Loads		
HPCS pump	*3000 hp* *1800 rpm* *373 FLA*	*3000 hp* *1800 rpm* *373 FLA*
Auxiliary loads	*220 kW*	*220 kW*

[a] *Columbia Generating Station overall diesel generator moment of inertia is lower than LaSalle. Hence, diesel generator starting time may be less for Columbia Generating Station than for LaSalle.*

[b] *The higher transient and subtransient reactance for Columbia Generating Station is compensated by the use of a static exciter which provides faster voltage recovery during voltage dips.*

[c] *Electronic sensing together with hydraulic actuation result in faster and more accurate response.*

Table 8.3-7

Class 1E Auxiliary Alternating Current Distribution System - Acceptable Voltage Range

	Voltages		Voltage Ranges	
System Level	System Nominal	Motor Nameplate	Normal Operation[a]	Starting[b]
4.16-kV switchgear	4.16 kV	4.0 kV	3.6-4.4 kV	3.2-4.4 kV
480-V switchgear	480 V	460 V	414-506 V	368-506 V
480-V MCC	480 V	460 V	414-506 V	368-506 V

[a] Minimum and maximum voltages indicated correspond to 90% and 110% (respectively) of motor nameplate voltage for the particular voltage level.

[b] Minimum and maximum voltages indicated correspond to 80% and 110% (respectively) of motor nameplate voltage for the particular voltage level.

Note:

Deviation from the minimum voltage requirements is permitted for Class 1E motors provided an analysis is performed, and documented to demonstrate that the motors can perform their safety function with the voltage supplied.

Table 8.3-8

System Bus Voltage Monitoring Alarms

System Level	Monitoring Device	Location	Undervoltage Alarms[a]	
			Annunciator	Computer
500-kV grid	Voltmeter	Main control room	---	---
230-kV grid	Voltmeter	Main control room	---	---
115-kV grid	Voltmeter	Main control room	X	---
4.16-kV switchgear	Voltmeter	Main control room	X	X
480-V switchgear	Voltmeter	Main control room	---	---
480-V MCC	---	---	---	---

[a] Located in main control room.

Table 8.3-9

Plant Switchgear and Motor Control Center
Direct Current Control Power Summary

Switchgear/MCC			Source	
Designation	Voltage[a]	Division	Panel[b]	Division
SH-5	6.9 kV	A	DP-S1-1C	A
SH-6	6.9 kV	B	DP-S1-2C	B
SH-9	6.9 kV	1	DP-S1-1F	1
SH-10	6.9 kV	2	DP-S1-2D	2
SH-11	6.9 kV	2	DP-S1-2D	2
SH-12	6.9 kV	1	DP-S1-1F	1
SM-1	4.16 kV	A	DP-S1-1C	A
SM-2	4.16 kV	B	DP-S1-2C	B
SM-3	4.16 kV	A	DP-S1-1C	A
SM-4	4.16 kV	3	DP-HPCS	3
SM-7	4.16 kV	1	DP-S1-1D	1
SM-8	4.16 kV	2	DP-S1-2D	2
SM-72	4.16 kV	A	DP-S1-3	A
SM-75	4.16 kV	A	DP-S1-1C	A
SM-82	4.16 kV	B	DP-S1-4	B
SM-85	4.16 kV	B	DP-S1-2C	B
DG1-7	4.16 kV	1	DP-S1-1E	1
DG2-8	4.16 kV	2	DP-S1-2E	2
SL-11	480 V	A	DP-S1-1C	A
SL-21	480 V	B	DP-S1-2C	B
SL-31	480 V	A	DP-S1-1C	A
SL-51	480 V	A	Note 4	
SL-52	480 V	A	Note 4	

Table 8.3-9

Plant Switchgear and Motor Control Center
Direct Current Control Power Summary (Continued)

Switchgear/MCC			Source	
Designation	Voltage[a]	Division	Panel[b]	Division
SL-53	480 V	A	DP-S1-1C-2	A
SL-54	480 V	A	DP-S1-1C	A
SL-61	480 V	B	c	
SL-62	480 V	B	c	
SL-63	480 V	B	DP-S1-2C	B
SL-71	480 V	1	DP-S1-1F	1
SL-73	480 V	1	DP-S1-1F	1
SL-81	480 V	2	DP-S1-2D	2
SL-83	480 V	2	DP-S1-2D	2
MC-S1-1D	125-V dc	1	DP-S1-1	1
MC-S1-2D	125-V dc	2	DP-S1-2	2
MC-S2-1A	250-V dc	1	DP-S1-1D	1
MC-S2-1B	250-V dc	A	DP-S1-1C-1	A

[a] Voltage is ac, unless otherwise noted.

[b] See Figure 8.3-52.

[c] Switchgear contains manually operated breakers. All indication is remote powered via the non-Class 1E supervisory system.

Note:

Control power for 480-V-ac motor control centers is obtained from control power transformers located in the units.

NOTE: The italicized information below is historical and is no longer updated in the FSAR. For Division 1 and 2 duty cycles refer to calculation 2.05.01 and its outstanding Calculation Modification Records (CMRs). For the Division 3 duty cycles refer to calculation E/I-02-85-02 and its outstanding CMRs.

Table 8.3-10

Battery Design Duty Cycles (Amperes vs. Time)

Division 1 and 2 Battery Duty Cycles

Battery[1]	*Seconds*						*Minutes*			
	0≤t<1	*1≤t<6*	*6≤t<12*	*12≤t<18*	*18≤t<30*	*30≤t<60*	*1≤t<2*	*2≤t<60*	*60≤t<119*	*119≤t<120*
E-B0-1A/-1B	*21.96*	*21.96*	*21.96*	*21.96*	*21.96*	*21.96*	*21.96*	*21.96*	*21.96*	*21.96*
E-B0-2A/-2B	*15.33*	*15.33*	*15.33*	*15.33*	*15.33*	*15.33*	*15.33*	*15.33*	*15.33*	*15.33*
E-B1-1	*370.12*	*327.84*	*293.34*	*185.02*	*184.93*	*167.61*	*164.29*	*156.29*	*156.29*	*214.29*
E-B1-2	*252.3*	*279.0*	*237.1*	*159.1*	*159.1*	*146.9*	*146.9*	*146.9*	*146.9*	*204.9*
E-B2-1	*894.5*	*591.4*	*354.3*	*367.9*	*390.6*	*373.2*	*452.8*	*357.1*	*349.7*	*349.7*

Division 3 Battery Duty Cycle

Battery[2]	*Seconds*					*Minutes*	
	0≤t<2	*2≤t<4*	*4≤t<8*	*8≤t<12*	*12≤t<60*	*1≤t<60*	*60≤t<120*
E-B1-HPCS	*31.49*	*31.49*	*44.89*	*22.79*	*11.99*	*11.99*	*12.19*

Notes:

*Table 8.3-11**

Division 1 125-Volt Direct Current Battery Design Duty Cycle

**The italicized information is historical and was provided to support the application for an operating license. It is no longer updated in the FSAR.*

	Seconds			*Minutes*			
Equipment	*0-6*	*6-18*	*18-60*	*1-2*	*2-60*	*60-119*	*119-120*
MC-S1-1D	*138*	*77*	*40*	*26*	*18*	*18*	*18*
Switchgear control[a]	---	---	---	---	---	---	---
Inverter IN-3A or 3B (PP-7A-A)	*85*	*85*	*85*	*85*	*85*	*85*	*85*
Distribution panels (DP-S1-1A) (DP-S1-1D) (DP-S1-1E) (DP-S1-1F)	*137*	*131*	*55*	*53*	*53*	*53*	*111*
Contingency (future)	*10*	*10*	*5*	*5*	*5*	*5*	*5*
Total amperes[b]	*370*	*303*	*182*	*169*	*161*	*161*	*219*

[a] *The switchgear control power loads are included in the distribution panels.*

[b] *The total values include margin and are rounded up from the maximum amps occurring at any second within the above time intervals. Not all loads listed within the 0-60 second interval are concurrent.*

Notes:

1 This duty cycle is based on calculation 2.05.01.

2. The duty cycle is based on loss of offsite power (LOOP) with a coincident loss-of-coolant accident (LOCA) at time = 0.

3. The load increase during the last minute (time = 120 minutes) is the result of adding momentary loads that occur while returning safety systems to their standby mode. The most limiting condition is for these operator controlled loads to occur at the end of the duty cycle.

*Table 8.3-12**

Division 2 125-Volt Direct Current Battery Design Duty Cycle

**The italicized information is historical and was provided to support the application for an operating license. It is no longer updated in the FSAR.*

	Seconds			*Minutes*			
Equipment	*0-6*	*6-18*	*18-60*	*1-2*	*2-60*	*60-119*	*119-120*
MC-S1-2D	*76*	*40*	*36*	*22*	*22*	*22*	*22*
Switchgear control[a]	---	---	---	---	---	---	---
Inverter IN-2A or 2B (PP-8A-A)	*70*	*70*	*70*	*70*	*70*	*70*	*70*
Distribution panels (DP-S1-2A) (DP-S1-2D) (DP-S1-2E)	*153*	*141*	*63*	*63*	*63*	*63*	*121*
Contingency (future)	*5*	*5*	*5*	*5*	*5*	*5*	*5*
Total amperes[b]	*304*	*255*	*174*	*160*	*160*	*160*	*218*

[a] *The switchgear control power loads are included in the distribution panels.*

[b] *The total values include margin and are rounded up from the maximum amps occurring at any second within the above time intervals. Not all loads listed within the 0-60 second intervals are concurrent.*

Notes:

1. *This battery duty cycle is based on calculation 2.05.01.*

2. *The load profile is based on loss of offsite power (LOOP) with a coincident loss of coolant accident (LOCA) at time = 0.*

3. *The load increase during the last minute (time = 120 minutes) is the result of adding momentary loads that occur while returning safety systems to their standby mode. The most limiting condition is for these operator controlled loads to occur at the end of the 2-hr duty cycle.*

*Table 8.3-13**

Division 3 (HPCS) 125-Volt Direct Current Battery Design Duty Cycle
HPCS-B1-DG3[a]

**The italicized information is historical and was provided to support the application for an operating license. It is no longer updated in the FSAR.*

	Seconds			*Minutes*	
Description	*0-13*	*13-20*	*20-60*	*1-60*	*60-120*
HPCS system control[b]	*6.5*	*6.5*	*6.5*	*6.5*	*6.5*
Field flashing	*22*	---	---	---	---
Two air-start solenoid valves	*2.0*	---	---	---	---
Switchgear (one breaker trip)	*6.0*	---	---	---	---
Switchgear (two breakers close)	*6.0*	*6.0*	---	---	---
Diesel generator standby fuel pump (DO-P-6)	*16.7*	*5.2*	*5.2*	*5.2*	*5.4*
Diesel generator lube oil pump (DLO-P-10)	*10.9*	*4.8*	---	---	---
Total amperes[c]	*50.0*	*50.0*	*15.0*	*15.0*	*15.0*

[a] Battery duty cycle is based on loss of ac power with a coincident HPCS system actuation.

[b] High-pressure core spray system control components consist of DG protective and auxiliary relays, DG control relays, time delay relays, a local annuciator panel, HPCS valve position indicators, control relays for HPCS process control logic, etc.

[c] The total values include margin and are rounded up from the maximum amps occurring at any second within the above time intervals. Not all loads listed within the 0-13 second interval are concurrent.

*Table 8.3-14**

Division 1 250-Volt Direct Current Battery Design Duty Cycle

**The italicized information is historical and was provided to support the application for an operating license. It is no longer updated in the FSAR.*

	Seconds			*Minutes*			
Equipment	*0-6*	*6-18*	*18-60*	*1-2*	*2-60*	*60-119*	*119-120*
MC-S2-1A	*150*	*36*	*40*	*133*	*37*	*30*	*30*
MC-S2-1B	*617*	*188*	*188*	*188*	*188*	*188*	*188*
Inverter IN-1 (Panel US-PP)	*122*	*122*	*122*	*122*	*122*	*122*	*122*
Contingency (future)	*10*	*10*	*10*	*5*	*5*	*5*	*5*
Total amperes[a]	*899*	*356*	*360*	*448*	*352*	*345*	*345*

[a] *The total values include margin and are rounded up from the maximum amps occurring at any second within the above time intervals. Not all loads listed within the 0-60 second intervals are concurrent.*

Notes:

1. *Duty cycle based on calculation 2.05.01.*

2. *The duty cycle is based on loss of offsite power (LOOP) with a coincident loss of coolant accident (LOCA) at time = 0.*

3. *The load increase during the last minute (time = 120 minutes) is the result of adding momentary loads that occur while returning safety systems to their standby mode. The most limiting condition is for these operator controlled loads to occur at the end of the 2-hr duty cycle.*

DELETED

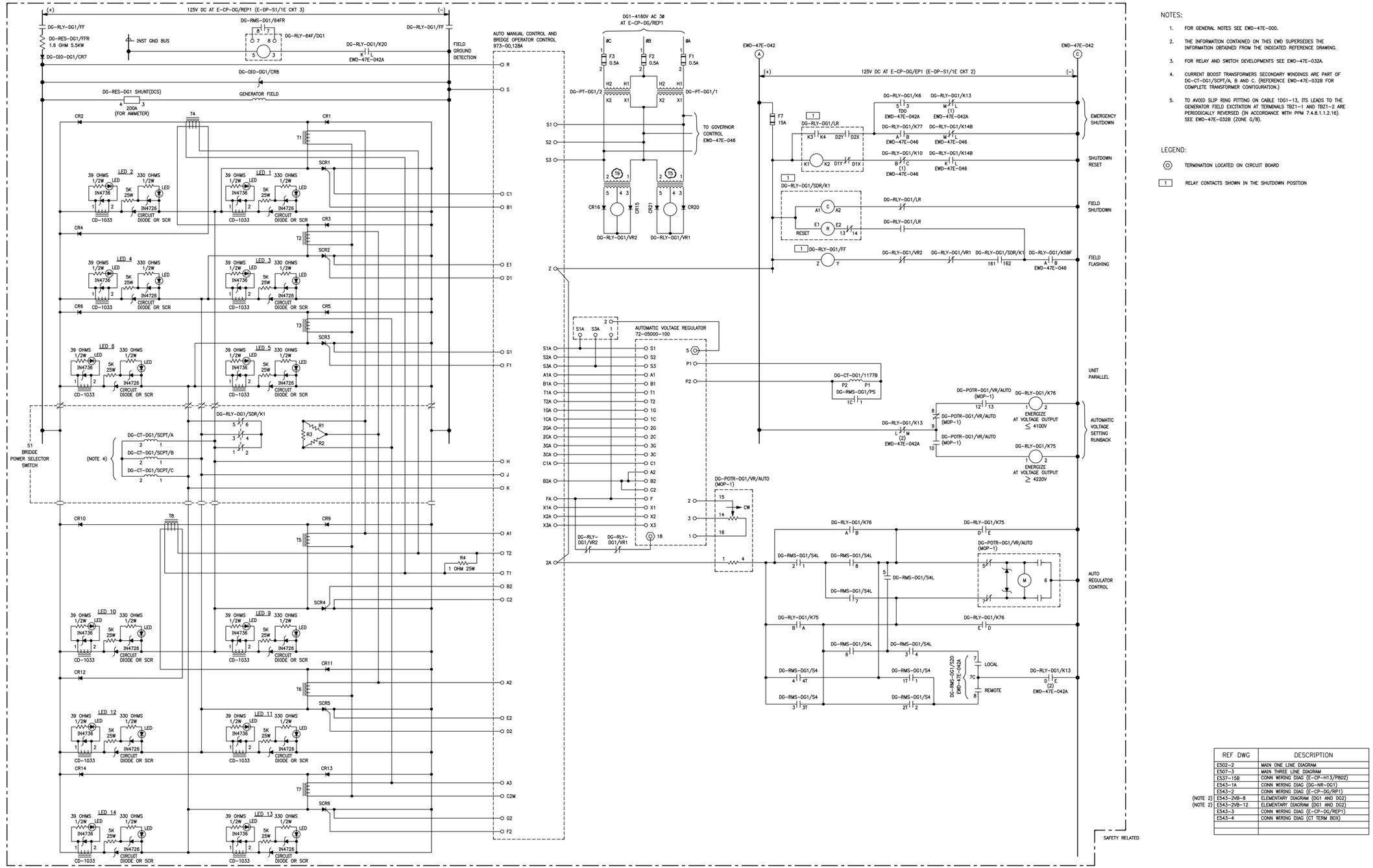

NOTES:

1. FOR GENERAL NOTES SEE EWD-47E-000.
2. THE INFORMATION CONTAINED ON THIS EWD SUPERSEDES THE INFORMATION OBTAINED FROM THE INDICATED REFERENCE DRAWING.
3. FOR RELAY AND SWITCH DEVELOPMENTS SEE EWD-47E-032A.
4. CURRENT BOOST TRANSFORMERS SECONDARY WINDINGS ARE PART OF DG-CT-DG1/SCPT/A, B AND C. (REFERENCE EWD-47E-032B FOR COMPLETE TRANSFORMER CONFIGURATION.)
5. TO AVOID SLIP RING PITTING ON CABLE 1DG1-13, ITS LEADS TO THE GENERATOR FIELD EXCITATION AT TERMINALS TBZ1-1 AND TBZ1-2 ARE PERIODICALLY REVERSED (IN ACCORDANCE WITH PPM 7.4.8.1.1.2.16). SEE EWD-47E-032B (ZONE G/8).

LEGEND:

⟨0⟩ TERMINATION LOCATED ON CIRCUIT BOARD

[1] RELAY CONTACTS SHOWN IN THE SHUTDOWN POSITION

REF DWG	DESCRIPTION
E502-2	MAIN ONE LINE DIAGRAM
E507-3	MAIN THREE LINE DIAGRAM
E537-15B	CONN WIRING DIAG (E-CP-H13/PB02)
E543-1A	CONN WIRING DIAG (DG-NR-DG1)
E543-2	CONN WIRING DIAG (E-CP-DG/REP1)
(NOTE 2) E543-2VB-8	ELEMENTARY DIAGRAM (DG1 AND DG2)
(NOTE 2) E543-2VB-12	ELEMENTARY DIAGRAM (DG1 AND DG2)
E543-3	CONN WIRING DIAG (E-CP-DG/REP1)
E543-4	CONN WIRING DIAG (CT TERM BOX)

Columbia Generating Station
Final Safety Analysis Report

DGI Excitation System

Draw. No. EWD-47E-032 | Rev. 14 | Figure 8.3-11

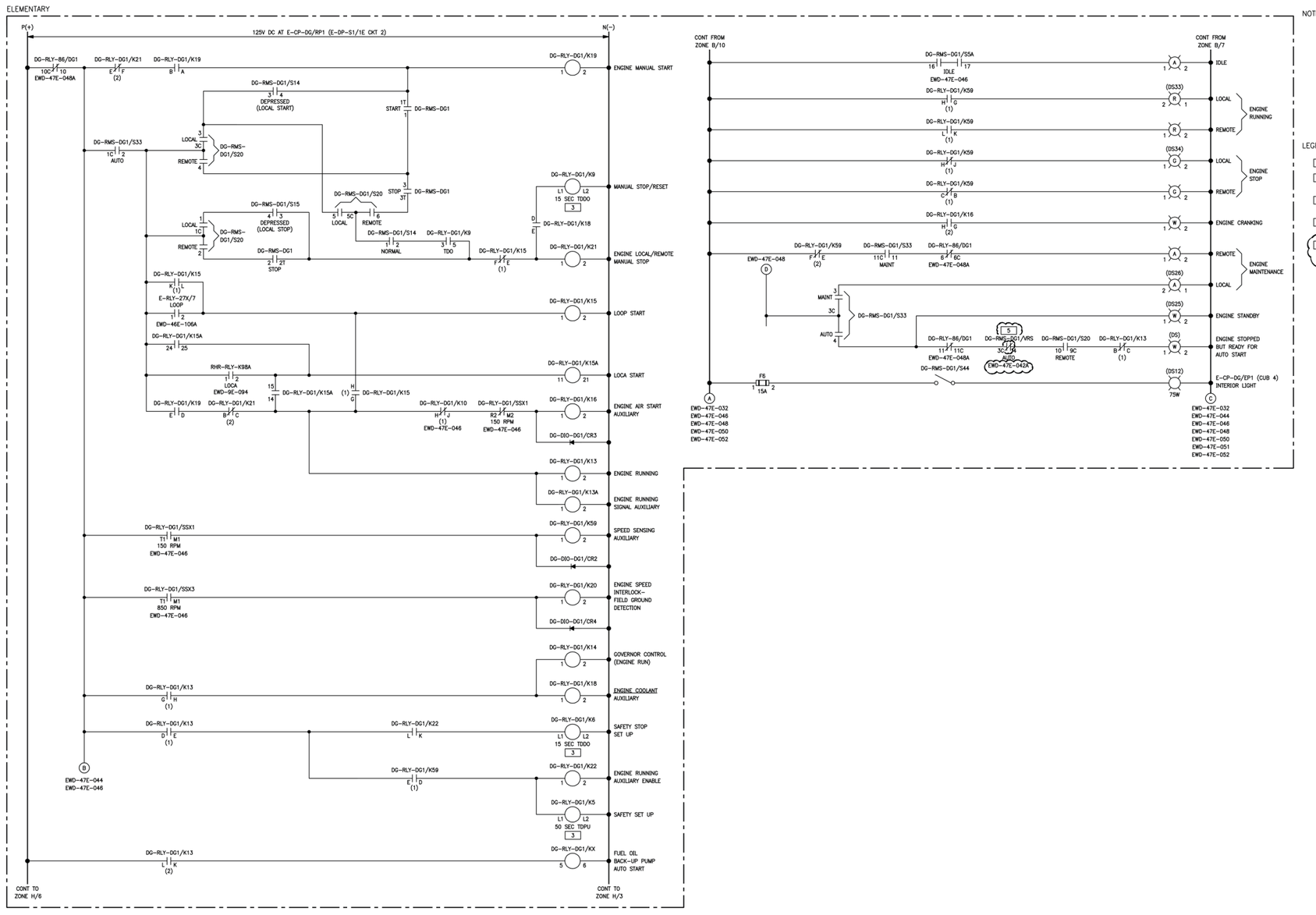

NOTES:

1. FOR GENERAL NOTES SEE EWD-47E-000.
2. THE INFORMATION CONTAINED ON THIS EWD SUPERSEDES THE INFORMATION OBTAINED FROM THE INDICATED REFERENCE DRAWING.
3. FOR RELAYS AND SWITCH DEVELOPMENTS SEE EWD-47E-042A UNLESS OTHERWISE NOTED.
4. FOR RELAYS AND SWITCH DEVELOPMENTS SEE EWD-47E-042A UNLESS OTHERWISE NOTED.

LEGEND:

[1] NON-SAFETY RELATED

[2] INDICATES "TRANSITIONED" SIMPLE CIRCUIT THAT REQUIRES "TOP TIER" DRAWING CONTROL STATUS

[3] TIME DELAY RELAY SETPOINT IS NOMINAL. FOR TIME DELAY RELAY SETTINGS, SEE ES14-30.

[4] DG-RLY-86/DG1 CONTACT 10/10C IS DUPLICATED ON EWD-47E-043 AND EWD-47E-047 (SHOWN ON EWD-47E-047 FOR CIRCUIT CONTINUITY)

[5] CONTROL SWITCH DG-RMS-DG1/VRS HAS BEEN DISABLED. THE DG1 GENERATOR VOLTAGE REGULATOR "MANUAL MODE" FUNCTION WAS REMOVED BY PLACING SWITCH IN "AUTO" AND REMOVING SWITCH HANDLE. PLANT ALSO LABELED AS SUCH PER EC 16405.

	REF DWG	DESCRIPTION
	E529-14	CONN WIRING DIAG (E-CP-H13/P802)
	E537-7C	CONN WIRING DIAG (E-CP-H13/P684)
	E537-15B	CONN WIRING DIAG (E-CP-H13/P902)
	E543-2	CONN WIRING DIAG (E-CP-DG/RP1)
(NOTE 2)	E543-2VB-1	ELEMENTARY DIAGRAM (DG-1 AND DG-2)
(NOTE 2)	E543-2VB-2	ELEMENTARY DIAGRAM (DG-1 AND DG-2)
(NOTE 2)	E543-2VB-3	ELEMENTARY DIAGRAM (DG-1 AND DG-2)
(NOTE 2)	E543-2VB-4	ELEMENTARY DIAGRAM (DG-1 AND DG-2)
(NOTE 2)	E543-2VB-6	ELEMENTARY DIAGRAM (DG-1 AND DG-2)
(NOTE 2)	E543-2VB-7	ELEMENTARY DIAGRAM (DG-1 AND DG-2)
	E543-5	CONN WIRING DIAG (E-CP-DG/EP1)

Columbia Generating Station
Final Safety Analysis Report

DG1 Engine Start/Stop Controls

Draw. No. EWD-47E-042 | Rev. 15 | Figure 8.3-12

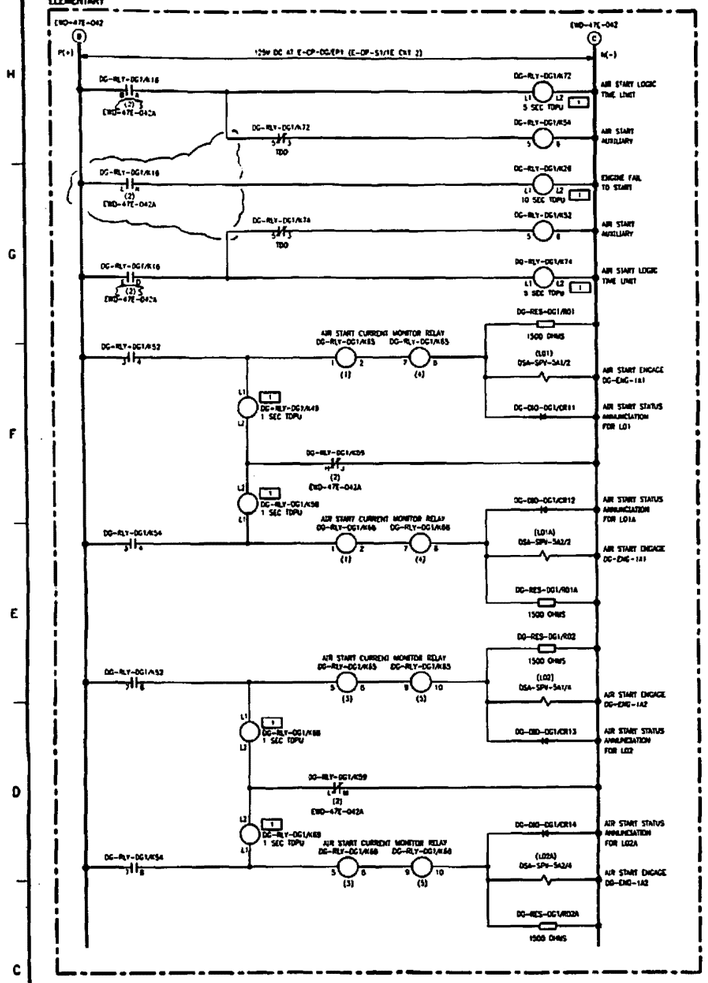

DG-RLY-DG1/K65

CONTACTS		DWG
1	2	
11	12	E543-3WR-1 (END LATER)
3	4	SPARE
13	14	
5	6	EWD-47E-078
15	16	
7	8	EWD-47E-078
17	18	
9	10	E543-3WR-1 (END LATER)
19	20	

DG-RLY-DG1/K66

CONTACTS		DWG
1	2	
11	12	E543-3WR-1 (END LATER)
3	4	SPARE
13	14	
5	6	E543-3WR-1 (END LATER)
15	16	
7	8	EWD-47E-078
17	18	
9	10	
19	20	EWD-47E-078

DG-RLY-DG1/K26

CONTACTS		DWG
2	4	
TIME DELAY 1		SPARE
TIME DELAY 2		SPARE
TIME DELAY 3		EWD-47E-048
TIME DELAY 4		SPARE

DG-RLY-DG1/K49

CONTACTS		DWG
2	4	
TIME DELAY 1		SPARE
TIME DELAY 2		EWD-47E-078
TIME DELAY 3		SPARE
TIME DELAY 4		E543-3WR-1 (END LATER)

DG-RLY-DG1/K52

CONTACTS		DWG
2	4	
		CONTACT SPACE
6	8	
7	8	
		CONTACT SPACE

DG-RLY-DG1/K54

CONTACTS		DWG
2	4	
		CONTACT SPACE
6	8	
7	8	
		CONTACT SPACE

DG-RLY-DG1/K58

CONTACTS		DWG
2	4	
TIME DELAY 1		SPARE
TIME DELAY 2		EWD-47E-078
TIME DELAY 3		SPARE
TIME DELAY 4		E543-3WR-1 (END LATER)

DG-RLY-DG1/K68

CONTACTS		DWG
2	4	
TIME DELAY 1		SPARE
TIME DELAY 2		EWD-47E-078
TIME DELAY 3		SPARE
TIME DELAY 4		E543-3WR-1 (END LATER)

DG-RLY-DG1/K69

CONTACTS		DWG
2	4	
TIME DELAY 1		SPARE
TIME DELAY 2		EWD-47E-078
TIME DELAY 3		SPARE
TIME DELAY 4		E543-3WR-1 (END LATER)

DG-RLY-DG1/K72

CONTACTS		DWG
2	4	
TIME DELAY 1		SPARE
TIME DELAY 2		
TIME DELAY 3		SPARE
TIME DELAY 4		SPARE

DG-RLY-DG1/K74

CONTACTS		DWG
2	4	
TIME DELAY 1		SPARE
TIME DELAY 2		
TIME DELAY 3		SPARE
TIME DELAY 4		SPARE

NOTES:

1. FOR GENERAL NOTES SEE EWD-47E-000
2. THE INFORMATION CONTAINED ON THIS EWD SUPERSEDES THE INFORMATION OBTAINED FROM THE INDICATED REFERENCE DRAWING
3. THIS CONDUCTOR IS SHOWN ON MULTIPLE EWDS FOR CIRCUIT CONTINUITY. SEE APPROPRIATE CABLE SCHEDULE FOR ADDITIONAL EWDS

LEGEND:

- ☐ SHOWN ON THIS DRAWING
- [1] TIME DELAY RELAY SETPOINT IS NOMINAL FOR TIME DELAY RELAY SETTINGS, SEE ES10-30

	REF DWG	DESCRIPTION
(NOTE 2)	E543-3VB-1	ELEMENTARY DIAG (DG1 AND DG2)
(NOTE 2)	E543-3VB-2	ELEMENTARY DIAG (DG1 AND DG2)
(NOTE 2)	E543-3VB-3	ELEMENTARY DIAG (DG1 AND DG2)
	E543-3	CONN WIRING DIAG (C-YB-01013, C-YB-01013)
	E543-3	CONN WIRING DIAG (C-CP-DG/EP1)

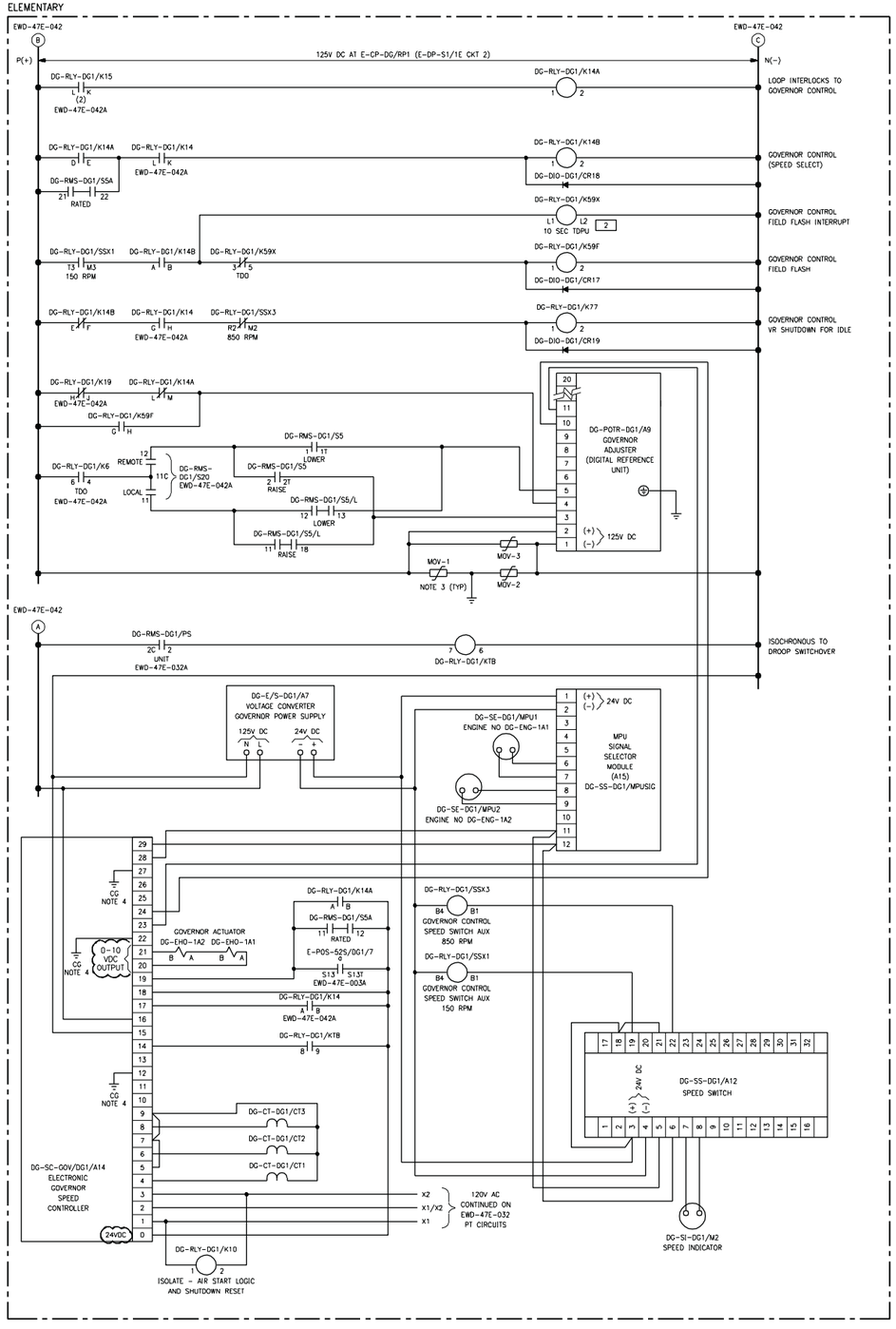

DG-RMS-DG1/S5/L

NORM, LOWER, RAISE — ESCUTCHEON

DECK	CONTACTS HANDLE END	POSITION LOWER	POSITION NORM	POSITION RAISE	DWG
1	11 — 18			X	□
	12 — 13	X			□
	15 — 14			X	SPARE
	16 — 17	X			SPARE

SPRING RETURN TO NORMAL

DG-RMS-DG1/S5A

RATED, IDLE — ESCUTCHEON

DECK	CONTACTS HANDLE END	POSITION RATED	POSITION IDLE	DWG
1	11 — 12	X		□
	16 — 17		X	EWD-47E-042
2	21 — 22	X		□
	25 — 26	X		SPARE

MAINTAINED CONTACT

DG-RMS-DG1/S5

NORM, LOWER, RAISE — ESCUTCHEON

CONTACTS HANDLE END		POSITION LOWER	POSITION NORM	POSITION RAISE	DWG
1 — 17	2T — 2	1 X			□
		2		X	□
3 — 33	4T — 4	3 X			SPARE
		4		X	SPARE

SPRING RETURN TO NORMAL

DG-RLY-DG1/K10

SNAP	CONTACTS	DWG
	1 — 2	□
1	B — A	SPARE
	C — D	EWD-47E-032
	E — D	SPARE
	F — G	SPARE
	H — C	SPARE
	J — K	EWD-47E-042
	L — K	SPARE
	M — N	EWD-47E-030
2	B — A	SPARE
	C — D	SPARE
	E — D	SPARE
	F — G	SPARE
	H — C	SPARE
	J — K	SPARE
	L — K	SPARE
	M — N	SPARE

DG-RLY-DG1/K14A

CONTACTS	DWG
1 — 2	□
B — A	□
C	SPARE
E — D	□
F	SPARE
H — G	SPARE
J	SPARE
L — K	SPARE
M	□

DG-RLY-DG1/K14B

CONTACTS	DWG
1 — 2	□
B — A	□
C	SPARE
E — D	SPARE
F	□
H — G	SPARE
J	SPARE
L — K	EWD-47E-032
M	EWD-47E-032

DG-RLY-DG1/K59F

CONTACTS	DWG
1 — 2	□
B — A	EWD-47E-032
C	SPARE
E — D	SPARE
F	SPARE
H — G	□
J	SPARE
L — K	SPARE
M	SPARE

DG-RLY-DG1/K59X

CONTACTS	DWG
L1 — L2	□
TIME DELAY 5 — 1	SPARE
3	□
6 — 2	SPARE
4	SPARE

DG-RLY-DG1/K77

CONTACTS	DWG
1 — 2	□
B — A	EWD-47E-032
C	SPARE
E — D	SPARE
F	SPARE
H — G	SPARE
J	SPARE
L — K	SPARE
M	SPARE

DG-RLY-DG1/SSX1

CONTACTS	DWG
B1 — B4	□
M1 — T1	EWD-47E-042
R1	SPARE
M2 — T2	SPARE
R2	EWD-47E-042
M3 — T3	□
R3	SPARE
M4 — T4	SPARE
R4	SPARE

DG-RLY-DG1/SSX3

CONTACTS	DWG
B1 — B4	□
M1 — T1	EWD-47E-042
R1	SPARE
M2 — T2	SPARE
R2	□
M3 — T3	SPARE
R3	SPARE
M4 — T4	SPARE
R4	SPARE

DG-RLY-DG1/KTB

CONTACTS	DWG
6 — 7	□
2 — 3	SPARE
1	SPARE
4 — 5	SPARE
8 — 9	□
11 — 10	SPARE
12	SPARE

NOTES:

1. FOR GENERAL NOTES SEE EWD-47E-000.
2. THE INFORMATION CONTAINED ON THIS EWD SUPERSEDES THE INFORMATION OBTAINED FROM THE INDICATED REFERENCE DRAWING.
3. MOV-1, -2 AND -3 ARE METAL OXIDE VARISTORS INSTALLED FOR EMC. USE CID 23582, LITTLEFUSE MODEL V151BA60.
4. DG-SC-GOV/DG1/A14 ELECTRONIC GOVERNOR SPEED CONTROLLER, TERMINALS 12, 22 & 27 ARE INTERNALLY CONNECTED TO CHASSIS GROUND (CG).

LEGEND:

□ SHOWN ON THIS DRAWING

[1] DG-RLY-86/DG1 CONTACT 10/10C IS DUPLICATED ON EWD-47E-043 AND EWD-47E-047 (SHOWN ON EWD-47E-047 FOR CIRCUIT CONTINUITY)

[2] TIME DELAY RELAY SETPOINT IS NOMINAL. FOR TIME DELAY RELAY SETTINGS, SEE E514-30.

REF DWG	DESCRIPTION
E537-15B	CONN WIRING DIAG (E-CP-H13/P802)
E543-2	CONN WIRING DIAG DG1 (E-CP-DG/RP1, DG-SE-DG1/MPU1 AND DG-SE-DG1/MPU2)
E543-3	CONN WIRING DIAG DG1 (E-TB-D1012 AND E-TB-D1013)
E543-5	CONN WIRING DIAG DG1 (E-CP-DG/EP1)
(NOTE 2) E543-2VB-1	ELEMENTARY DIAGRAM (DG1 AND DG2)
(NOTE 2) E543-2VB-2	ELEMENTARY DIAGRAM (DG1 AND DG2)
(NOTE 2) E543-2VB-5	ELEMENTARY DIAGRAM (DG1 AND DG2)

SAFETY RELATED

Columbia Generating Station
Final Safety Analysis Report

DG1 Governor Speed Control

Draw. No. EWD-47E-046 | Rev. 12 | Figure 8.3-14

ELEMENTARY

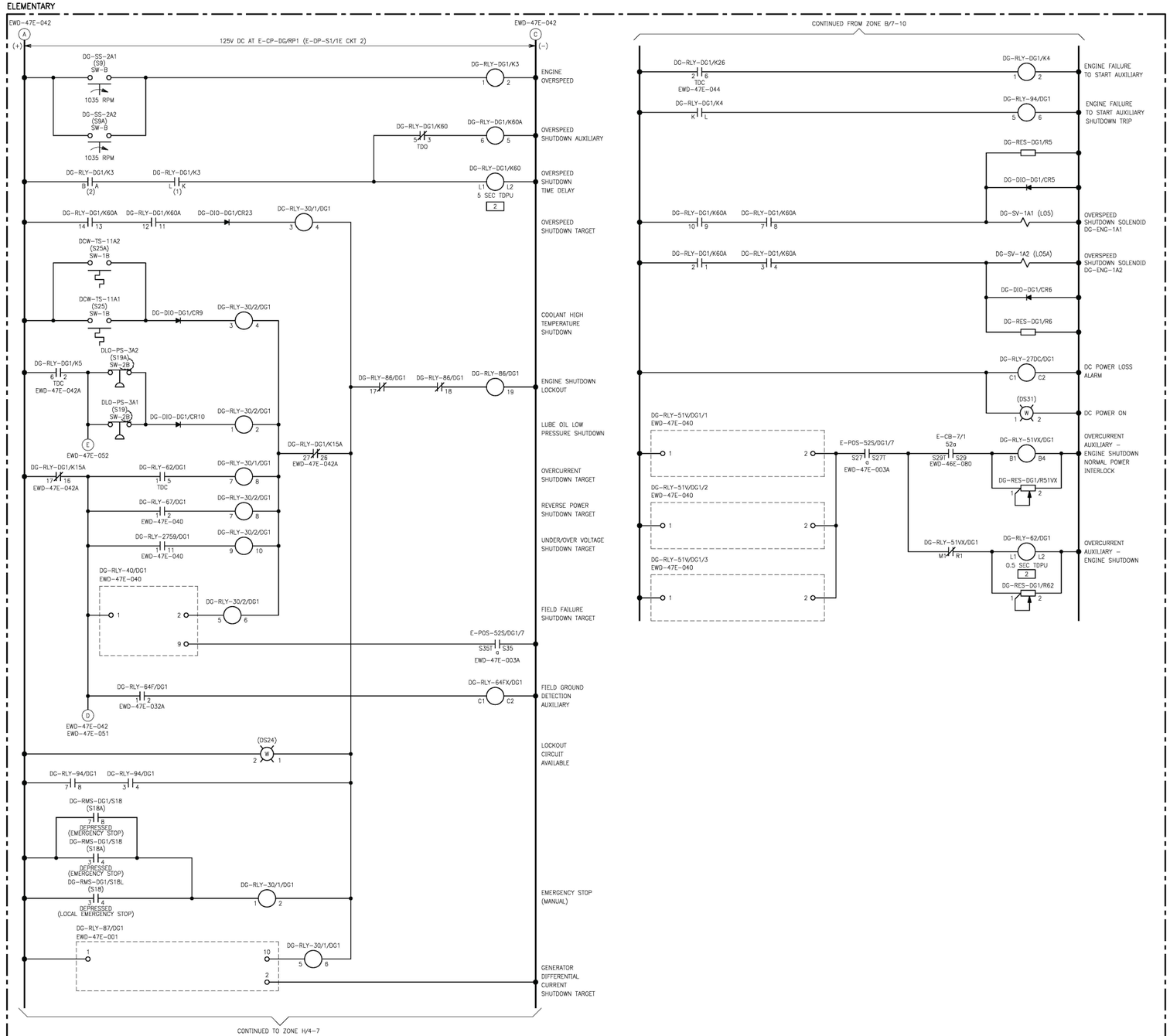

NOTES:

1. FOR GENERAL NOTES SEE EWD-47E-000.
2. THE INFORMATION CONTAINED ON THIS EWD SUPERSEDES THE INFORMATION OBTAINED FROM THE INDICATED REFERENCE DRAWING.
3. FOR RELAY AND SWITCH DEVELOPMENTS SEE EWD-47E-048A.
4. THIS CONDUCTOR IS SHOWN ON MULTIPLE EWDS FOR CIRCUIT CONTINUITY. SEE APPROPRIATE CABLE SCHEDULE FOR ADDITIONAL EWDS.

LEGEND:

[1] DG-RLY-DG1/K15A CONTACT 16/17 IS DUPLICATED ON EWD-47E-049 AND EWD-47E-051 (SHOWN ON EWD-47E-051 FOR CIRCUIT CONTINUITY)

[2] TIME DELAY RELAY SETPOINT IS NOMINAL. FOR TIME DELAY RELAY SETTINGS, SEE E514-30.

	REF DWG	DESCRIPTION
	E537-15B	CONN WIRING DIAG (E-CP-H13/P802)
	E543-2	CONN WIRING DIAG DG1 (E-CP-DG/RP1)
(NOTE 2)	E543-2VB-2	ELEMENTARY DIAG (DG1 AND DG2)
(NOTE 2)	E543-2VB-3	ELEMENTARY DIAG (DG1 AND DG2)
(NOTE 2)	E543-2VB-6	ELEMENTARY DIAG (DG1 AND DG2)
(NOTE 2)	E543-2VB-7	ELEMENTARY DIAG (DG1 AND DG2)
	E543-3	CONN WIRING DIAG DG1 (E-TB-D1012 AND E-TB-D1013)
	E543-5	CONN WIRING DIAG DG1 (E-CP-DG1/EP1)

Columbia Generating Station
Final Safety Analysis Report

DG1 Unit Protection Circuits

Draw. No. EWD-47E-048 | Rev. 14 | Figure 8.3-15

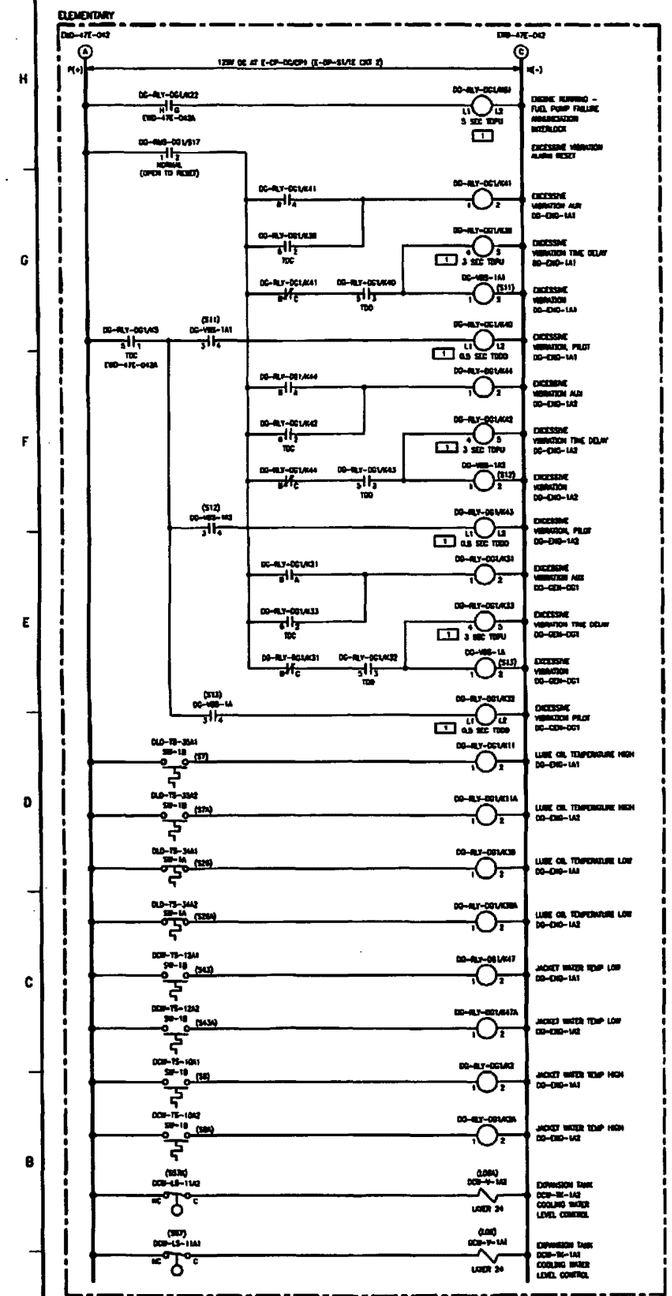

NOTES:

1. FOR GENERAL NOTES SEE EWD-47E-006.
2. THE INFORMATION CONTAINED ON THIS EWD SUPERSEDES THE INFORMATION OBTAINED FROM THE INDICATED REFERENCE DRAWING.
3. THIS CONDUCTOR IS SHOWN ON MULTIPLE EWD'S FOR CIRCUIT CONTINUITY. SEE APPROPRIATE CABLE SCHEDULE FOR ADDITIONAL EWD'S.

LEGEND:

- SHOWN ON THIS DRAWING
- [1] TIME DELAY RELAY SETPOINT IS NOMINAL. FOR TIME DELAY RELAY NOTATION, SEE E314-30.

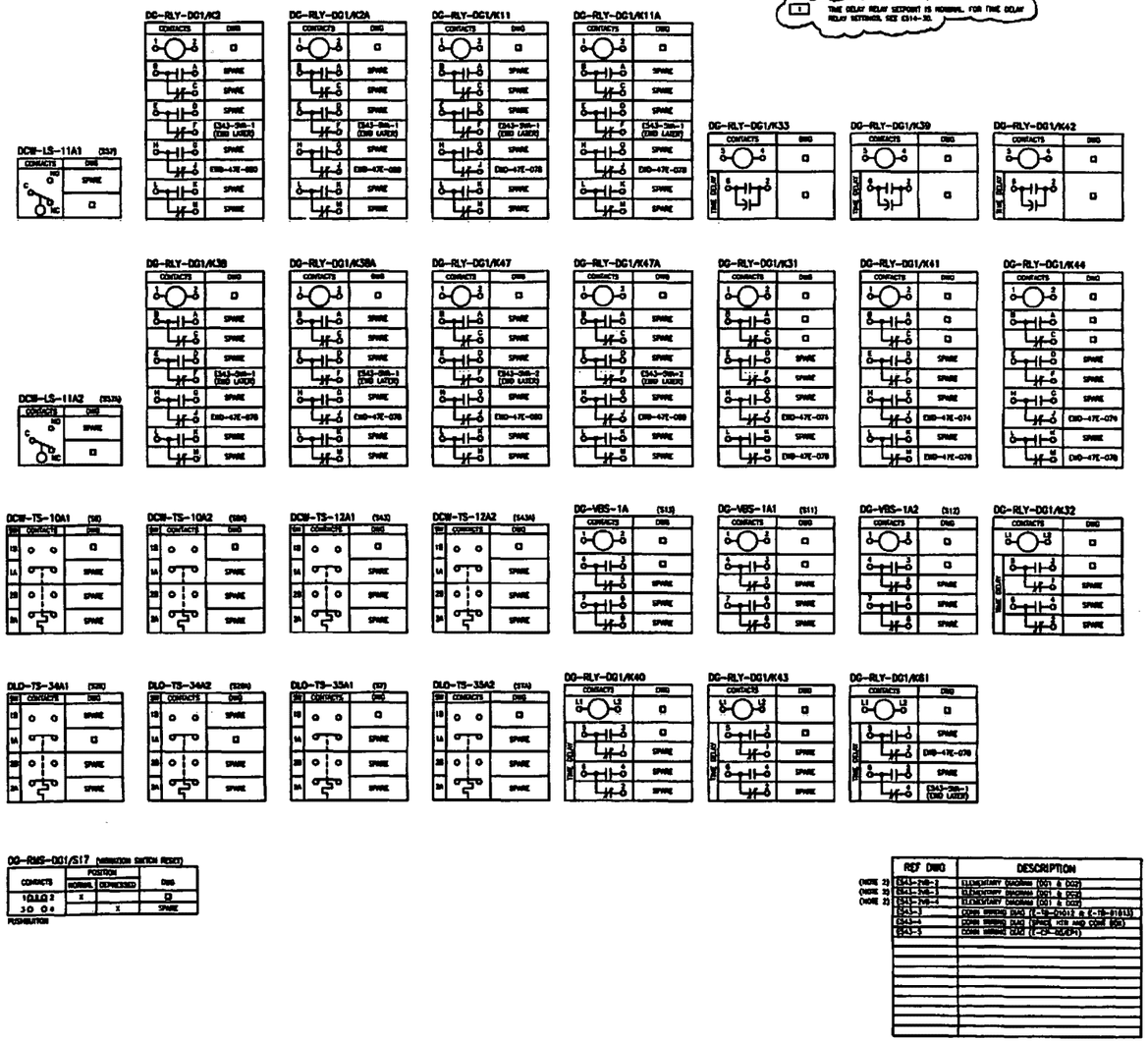

REF DWG	DESCRIPTION
(NOTE 2) E313-2WD-1	ELEMENTARY DIAGRAM (DG1 & DG2)
(NOTE 2) E313-2WD-3	ELEMENTARY DIAGRAM (DG1 & DG2)
(NOTE 2) E313-2WD-4	ELEMENTARY DIAGRAM (DG1 & DG2)
E313-1	CONN. DIAGRAM (EXC. TO E-19-51/52 & E-19-61/62)
E313-1	CONN. DIAGRAM (PANEL 47E AND CONT BOX)
E313-1	CONN. DIAGRAM (E-DP-DG/DP1)

Columbia Generating Station
Final Safety Analysis Report

DG1 Engine Alarms

Draw. No. EWD-47E-0050 | Rev. 11 | Figure 8.3-16.1

Amendment 58
December 2005

ELEMENTARY

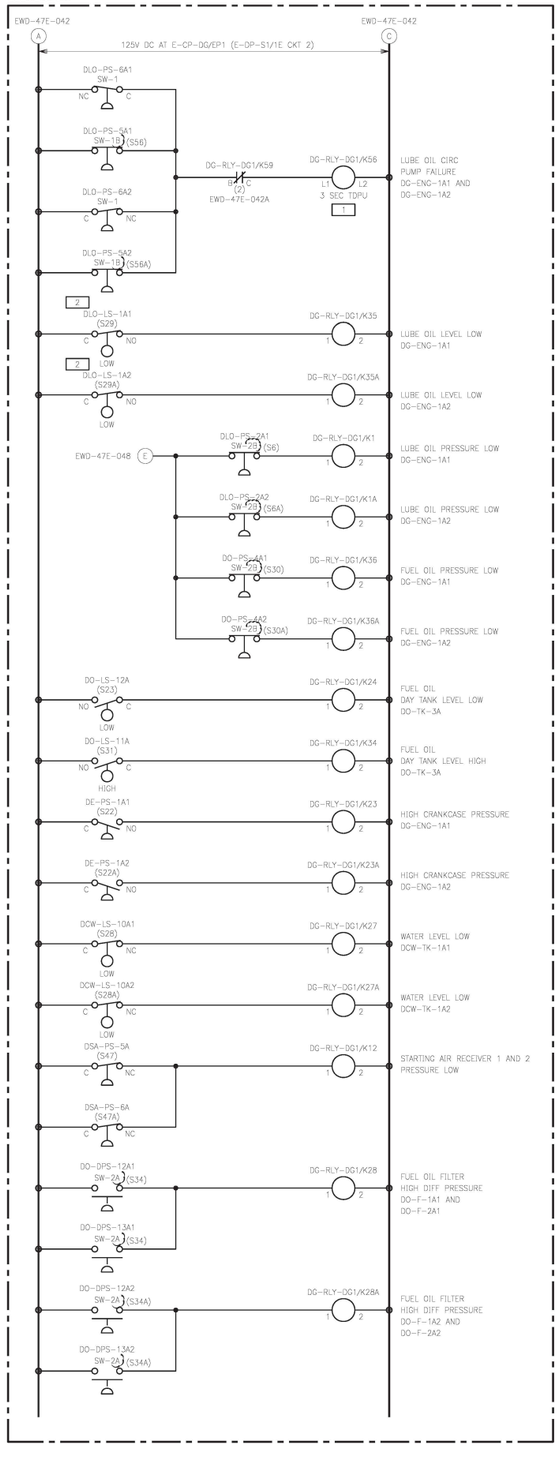

DG-RLY-DG1/K1

CONTACTS	DWG
1 2	□
B A	SPARE
C	SPARE
E D	SPARE
F	E543-5VA-1 (EWD LATER)
H G	SPARE
J	EWD-47E-080
L K	SPARE
M	SPARE

DG-RLY-DG1/K1A

CONTACTS	DWG
1 2	□
B A	SPARE
C	SPARE
E D	SPARE
F	E543-5VA-1 (EWD LATER)
H G	SPARE
J	EWD-47E-080
L K	SPARE
M	SPARE

DG-RLY-DG1/K12

CONTACTS	DWG
1 2	□
B A	SPARE
C	SPARE
E D	SPARE
F	E543-5VA-1 (EWD LATER)
H G	SPARE
J	EWD-47E-080
L K	SPARE
M	SPARE

DG-RLY-DG1/K23

CONTACTS	DWG
1 2	□
B A	SPARE
C	SPARE
E D	SPARE
F	E543-5VA-1 (EWD LATER)
H G	SPARE
J	EWD-47E-080
L K	SPARE
M	SPARE

DG-RLY-DG1/K23A

CONTACTS	DWG
1 2	□
B A	SPARE
C	SPARE
E D	SPARE
F	E543-5VA-1 (EWD LATER)
H G	SPARE
J	EWD-47E-080
L K	SPARE
M	SPARE

DG-RLY-DG1/K24

CONTACTS	DWG
1 2	□
B A	SPARE
C	EWD-47E-072
E D	SPARE
F	E543-5VA-1 (EWD LATER)
H G	SPARE
J	EWD-47E-080
L K	SPARE
M	SPARE

DG-RLY-DG1/K27

CONTACTS	DWG
1 2	□
B A	SPARE
C	SPARE
E D	SPARE
F	E543-5VA-1 (EWD LATER)
H G	SPARE
J	EWD-47E-080
L K	SPARE
M	SPARE

DG-RLY-DG1/K27A

CONTACTS	DWG
1 2	□
B A	SPARE
C	SPARE
E D	SPARE
F	E543-5VA-1 (EWD LATER)
H G	SPARE
J	EWD-47E-080
L K	SPARE
M	SPARE

DG-RLY-DG1/K28

CONTACTS	DWG
1 2	□
B A	SPARE
C	SPARE
E D	SPARE
F	E543-5VA-1 (EWD LATER)
H G	SPARE
J	EWD-47E-080
L K	SPARE
M	SPARE

DG-RLY-DG1/K28A

CONTACTS	DWG
1 2	□
B A	SPARE
C	SPARE
E D	SPARE
F	E543-5VA-1 (EWD LATER)
H G	SPARE
J	EWD-47E-080
L K	SPARE
M	SPARE

DG-RLY-DG1/K34

CONTACTS	DWG
1 2	□
B A	SPARE
C	EWD-47E-074
E D	SPARE
F	E543-5VA-1 (EWD LATER)
H G	SPARE
J	EWD-47E-080
L K	SPARE
M	SPARE

DG-RLY-DG1/K35

CONTACTS	DWG
1 2	□
B A	SPARE
C	SPARE
E D	SPARE
F	E543-5VA-1 (EWD LATER)
H G	SPARE
J	EWD-47E-080
L K	SPARE
M	SPARE

DG-RLY-DG1/K35A

CONTACTS	DWG
1 2	□
B A	SPARE
C	SPARE
E D	SPARE
F	E543-5VA-1 (EWD LATER)
H G	SPARE
J	EWD-47E-080
L K	SPARE
M	SPARE

DG-RLY-DG1/K36

CONTACTS	DWG
1 2	□
B A	SPARE
C	SPARE
E D	SPARE
F	E543-5VA-1 (EWD LATER)
H G	SPARE
J	EWD-47E-080
L K	SPARE
M	SPARE

DG-RLY-DG1/K36A

CONTACTS	DWG
1 2	□
B A	SPARE
C	SPARE
E D	SPARE
F	E543-5VA-1 (EWD LATER)
H G	SPARE
J	EWD-47E-080
L K	SPARE
M	SPARE

DG-RLY-DG1/K56

CONTACTS	DWG
1 2	□
TIME DELAY 5 3	SPARE
TIME DELAY 6 4	EWD-47E-078
TIME DELAY	SPARE
TIME DELAY	E543-5VA-1 (EWD LATER)

DCW-LS-10A1 (S28)

CONTACTS	DWG
NO C NC	SPARE □

DCW-LS-10A2 (S28A)

CONTACTS	DWG
NO C NC	SPARE □

DLO-LS-1A1 (S29) 2

CONTACTS	DWG
NC C NO	SPARE □

DLO-LS-1A2 (S29A) 2

CONTACTS	DWG
NC C NO	SPARE □

DO-LS-11A (S31)

CONTACTS	DWG
NO C NC	□ SPARE

DO-LS-12A (S23)

CONTACTS	DWG
NO C NC	□ SPARE

DO-DPS-12A1 (S34)

SW	CONTACTS	DWG
1B		SPARE
1A		SPARE
2A		□
2B		SPARE

DO-DPS-12A2 (S34A)

SW	CONTACTS	DWG
1B		SPARE
1A		SPARE
2A		□
2B		SPARE

DO-DPS-13A1 (S34)

SW	CONTACTS	DWG
1B		SPARE
1A		SPARE
2A		□
2B		SPARE

DO-DPS-13A2 (S34A)

SW	CONTACTS	DWG
1B		SPARE
1A		SPARE
2A		□
2B		SPARE

DE-PS-1A1 (S22)

CONTACTS	DWG
NO C NC	□ SPARE

DE-PS-1A2 (S22A)

CONTACTS	DWG
NO C NC	□ SPARE

DLO-PS-2A1 (S6)

SW	CONTACTS	DWG
1B		SPARE
1A		SPARE
2A		SPARE
2B		SPARE

DLO-PS-2A2 (S6A)

SW	CONTACTS	DWG
1B		SPARE
1A		SPARE
2A		SPARE
2B		SPARE

DLO-PS-5A1 (S56)

SW	CONTACTS	DWG
1B		□
1A		SPARE
2A		EWD-47E-068
2B		SPARE

DLO-PS-5A2 (S56A)

SW	CONTACTS	DWG
1B		□
1A		SPARE
2A		EWD-47E-069
2B		SPARE

DLO-PS-6A1

SW	CONTACTS	DWG
1	NO C NC	SPARE □
2	NO C NC	SPARE SPARE

DLO-PS-6A2

SW	CONTACTS	DWG
1	NO C NC	SPARE □
2	NO C NC	SPARE SPARE

DLO-PS-4A1 (S30)

SW	CONTACTS	DWG
1B		SPARE
1A		SPARE
2A		SPARE
2B		□

DLO-PS-4A2 (S30A)

SW	CONTACTS	DWG
1B		SPARE
1A		SPARE
2A		SPARE
2B		SPARE

DSA-PS-5A (S47)

CONTACTS	DWG
NO C NC	SPARE □

DSA-PS-6A (S47A)

CONTACTS	DWG
NO C NC	SPARE □

NOTES:

1. FOR GENERAL NOTES SEE EWD-47E-000.
2. THE INFORMATION CONTAINED ON THIS EWD SUPERSEDES THE INFORMATION OBTAINED FROM THE INDICATED REFERENCE DRAWING.
3. THIS CONDUCTOR IS SHOWN ON MULTIPLE EWDS FOR CIRCUIT CONTINUITY. SEE APPROPRIATE CABLE SCHEDULE FOR ADDITIONAL EWDS.

LEGEND:

□ SHOWN ON THIS DRAWING

1 TIME DELAY RELAY SETPOINT IS NOMINAL. FOR TIME DELAY RELAY SETTINGS, SEE E514-30.

2 VENDOR CONTACT DESIGNATED "NO" IS NORMALLY CLOSED AT SHELF STATE.

REF DWG	DESCRIPTION
(NOTE 2) E543-2VB-2	ELEMENTARY DIAG (DG1 AND DG2)
(NOTE 2) E543-2VB-3	ELEMENTARY DIAG (DG1 AND DG2)
(NOTE 2) E543-2VB-4	ELEMENTARY DIAG (DG1 AND DG2)
E543-3	CONN WIRING DIAG (E-TB-D1012, E-TB-D1013)
E543-4	CONN WIRING DIAG (DO-TK-3)
E543-5	CONN WIRING DIAG (E-CP-DG/EP1)

Columbia Generating Station
Final Safety Analysis Report

DG1 Engine Alarms

Draw. No. EWD-47E-052 | Rev. 14 | Figure 8.3-16.2

ELEMENTARY

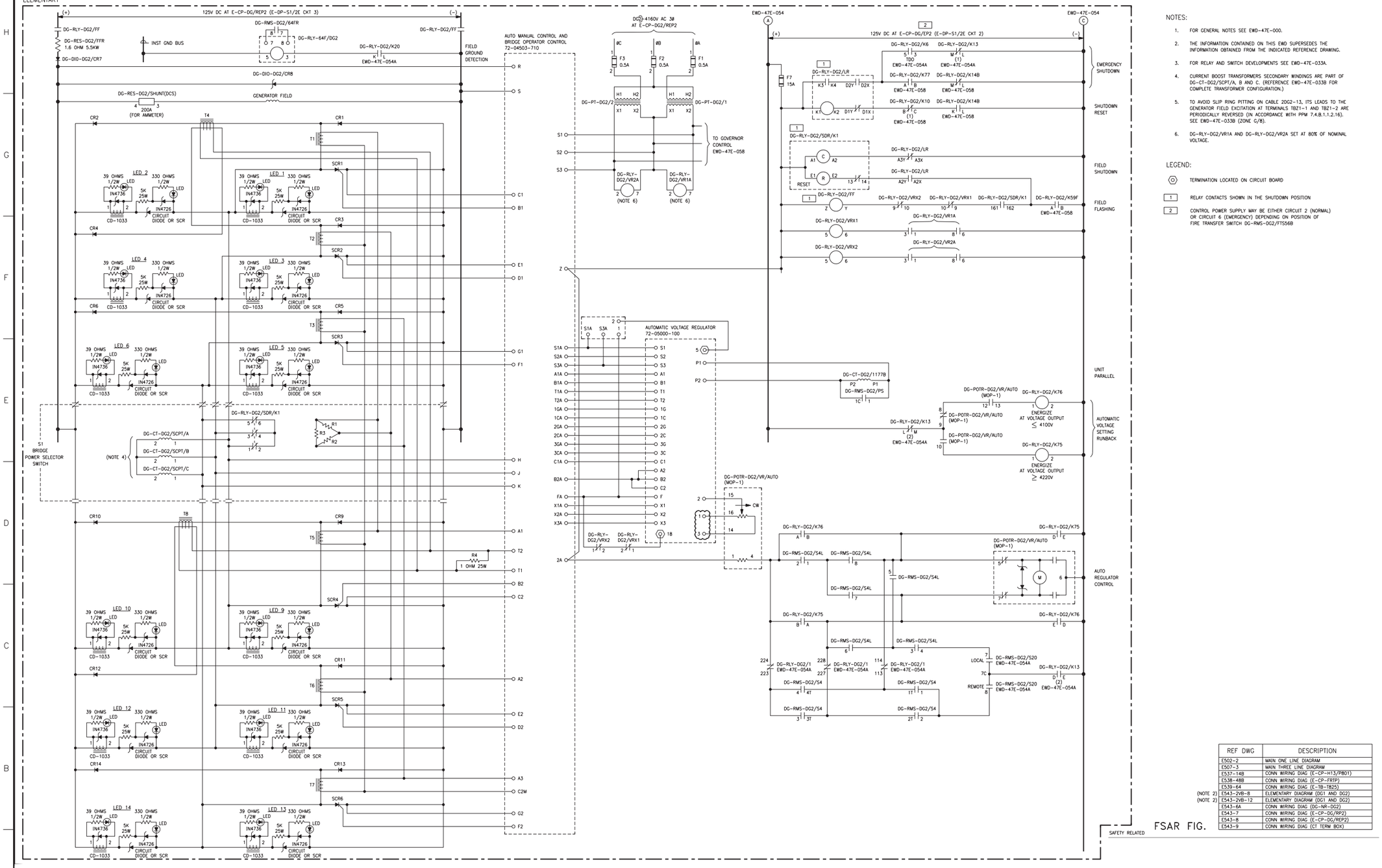

NOTES:

1. FOR GENERAL NOTES SEE EWD-47E-000.
2. THE INFORMATION CONTAINED ON THIS EWD SUPERSEDES THE INFORMATION OBTAINED FROM THE INDICATED REFERENCE DRAWING.
3. FOR RELAY AND SWITCH DEVELOPMENTS SEE EWD-47E-033A.
4. CURRENT BOOST TRANSFORMERS SECONDARY WINDINGS ARE PART OF DG-CT-DG2/SCPT/A, B AND C. (REFERENCE EWD-47E-033B FOR COMPLETE TRANSFORMER CONFIGURATION.)
5. TO AVOID SLIP RING PITTING ON CABLE 2DG2-13, ITS LEADS TO THE GENERATOR FIELD EXCITATION AT TERMINALS TBZ1-1 AND TBZ1-2 ARE PERIODICALLY REVERSED (IN ACCORDANCE WITH PPM 7.4.8.1.1.2.16). SEE EWD-47E-033B (ZONE G/8).
6. DG-RLY-DG2/VR1A AND DG-RLY-DG2/VR2A SET AT 80% OF NOMINAL VOLTAGE.

LEGEND:

- ⬡ TERMINATION LOCATED ON CIRCUIT BOARD
- [1] RELAY CONTACTS SHOWN IN THE SHUTDOWN POSITION
- [2] CONTROL POWER SUPPLY MAY BE EITHER CIRCUIT 2 (NORMAL) OR CIRCUIT 6 (EMERGENCY) DEPENDING ON POSITION OF FIRE TRANSFER SWITCH DG-RMS-DG2/FTS56B

	REF DWG	DESCRIPTION
	E502-2	MAIN ONE LINE DIAGRAM
	E507-3	MAIN THREE LINE DIAGRAM
	E537-14B	CONN WIRING DIAG (E-CP-H13/P801)
	E538-48B	CONN WIRING DIAG (E-CP-FRTP)
	E539-64	CONN WIRING DIAG (E-TB-TB25)
(NOTE 2)	E543-2VB-8	ELEMENTARY DIAGRAM (DG1 AND DG2)
(NOTE 2)	E543-2VB-12	ELEMENTARY DIAGRAM (DG1 AND DG2)
	E543-6A	CONN WIRING DIAG (DG-NR-DG2)
	E543-7	CONN WIRING DIAG (E-CP-DG/REP2)
	E543-8	CONN WIRING DIAG (E-CP-DG/REP2)
	E543-9	CONN WIRING DIAG (CT TERM BOX)

SAFETY RELATED FSAR FIG.

Columbia Generating Station
Final Safety Analysis Report

DG2 Excitation System

Draw. No. EWD-47E-033 | Rev. 11 | Figure 8.3-17

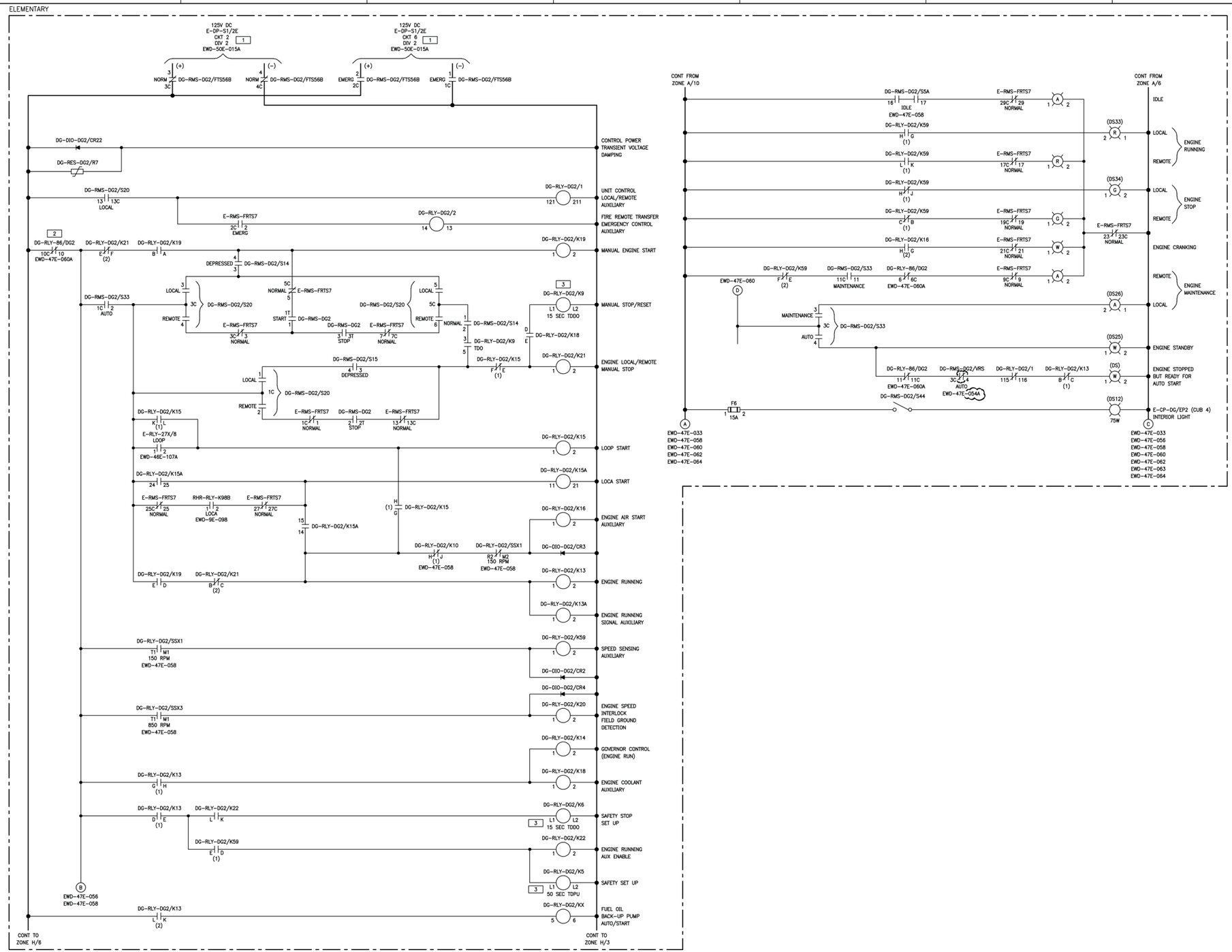

NOTES:

1. FOR GENERAL NOTES SEE EWD-47E-000.
2. THE INFORMATION CONTAINED ON THIS EWD SUPERSEDES THE INFORMATION OBTAINED FROM THE INDICATED REFERENCE DRAWING.
3. FOR RELAY AND SWITCH DEVELOPMENTS SEE EWD-47E-054A UNLESS OTHERWISE NOTED.
4. DG-RMS-DG2/VRS MANUAL CONTACT HAS BEEN DEACTIVATED BY REMOVING THE SWITCH HANDLE.

LEGEND:

[1] CONTROL POWER SUPPLY MAY BE EITHER CIRCUIT 2 (NORMAL) OR CIRCUIT 6 (EMERGENCY) DEPENDING ON POSITION OF FIRE TRANSFER SWITCH DG-RMS-DG2/FTS56B

[2] DG-RLY-86/DG2 CONTACT 10/10C IS DUPLICATED ON EWD-47E-055 AND EWD-47E-059 (SHOWN ON EWD-47E-059 FOR CIRCUIT CONTINUITY)

[3] TIME DELAY RELAY SETPOINT IS NOMINAL. FOR TIME DELAY RELAY SETTINGS SEE E514-30.

REF DWG	DESCRIPTION
E537-6A	CONN WIRING DIAG (E-CP-H13/P683)
E537-14B	CONN WIRING DIAG (E-CP-H13/P801)
E537-15C	CONN WIRING DIAG (E-CP-H13/P802)
E537-18C	CONN WIRING DIAG (E-CP-H13/P805)
(NOTE 2) E543-2VB-1	ELEMENTARY DIAG (DG1 AND DG2)
(NOTE 2) E543-2VB-2	ELEMENTARY DIAG (DG1 AND DG2)
(NOTE 2) E543-2VB-3	ELEMENTARY DIAG (DG1 AND DG2)
(NOTE 2) E543-2VB-4	ELEMENTARY DIAG (DG1 AND DG2)
(NOTE 2) E543-2VB-6	ELEMENTARY DIAG (DG1 AND DG2)
(NOTE 2) E543-2VB-7	ELEMENTARY DIAG (DG1 AND DG2)
E543-7	CONN WIRING DIAG (E-CP-DG/RP2)
E543-10	CONN WIRING DIAG (E-CP-DG/EP2)

Columbia Generating Station
Final Safety Analysis Report

DG2 Engine Start/Stop Controls

Draw. No. EWD-47E-054 | Rev. 10 | Figure 8.3-18

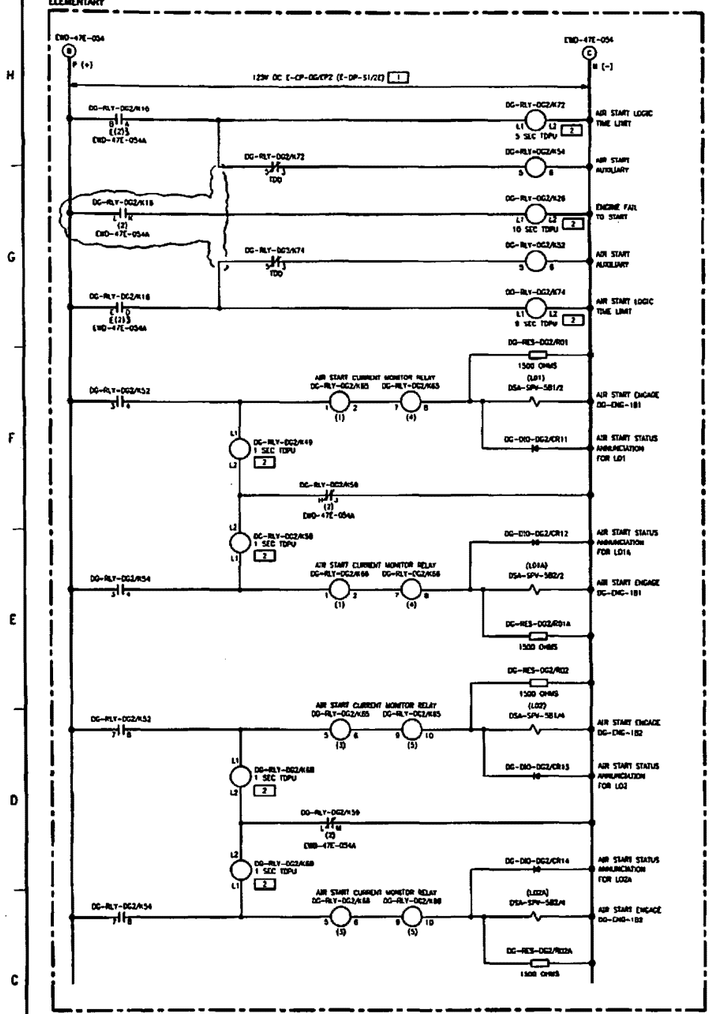

DG-RLY-DG2/K26

CONTACTS	DWG
L1 L2	□
TIME DELAY	SPARE
	SPARE
	EWD-47E-088
	SPARE

DG-RLY-DG2/K49

CONTACTS	DWG
L1 L2	□
TIME DELAY	SPARE
	EWD-47E-079
	SPARE
	E343-3MB-1 (EWD LATER)

DG-RLY-DG2/K32

CONTACTS	DWG
	□
	CONTACT SPACE
	□
	□
	CONTACT SPACE

DG-RLY-DG2/K54

CONTACTS	DWG
	□
	CONTACT SPACE
	□
	□
	CONTACT SPACE

DG-RLY-DG2/K58

CONTACTS	DWG
L1 L2	□
TIME DELAY	SPARE
	EWD-47E-079
	SPARE
	E343-3MB-1 (EWD LATER)

DG-RLY-DG2/K65

CONTACTS	DWG
	□
	E343-3MB-1 (EWD LATER)
	SPARE
	SPARE
	□
	EWD-47E-079
	□
	EWD-47E-079
	□
	E343-3MB-1 (EWD LATER)

DG-RLY-DG2/K66

CONTACTS	DWG
	□
	E343-3MB-1 (EWD LATER)
	SPARE
	SPARE
	□
	E343-3MB-1 (EWD LATER)
	□
	EWD-47E-079
	□
	EWD-47E-079

DG-RLY-DG2/K68

CONTACTS	DWG
	□
	SPARE
TIME DELAY	EWD-47E-079
	SPARE
	E343-3MB-1 (EWD LATER)

DG-RLY-DG2/K69

CONTACTS	DWG
	□
	SPARE
TIME DELAY	EWD-47E-079
	SPARE
	E343-3MB-1 (EWD LATER)

DG-RLY-DG2/K72

CONTACTS	DWG
	□
	SPARE
TIME DELAY	□
	SPARE
	SPARE

DG-RLY-DG2/K74

CONTACTS	DWG
	□
	SPARE
TIME DELAY	□
	SPARE
	SPARE

NOTES:

1. FOR GENERAL NOTES SEE EWD-47E-000
2. THE INFORMATION CONTAINED ON THIS EWD SUPERSEDES THE INFORMATION OBTAINED FROM THE INDICATED REFERENCE DRAWING.
3. THIS CONDUCTOR IS SHOWN ON MULTIPLE ENDS FOR CIRCUIT CONTINUITY. SEE APPROPRIATE CABLE SCHEDULE FOR ADDITIONAL ENDS

LEGEND:

□ SHOWN ON THIS DRAWING

[1] CONTROL POWER SUPPLY MAY BE EITHER CIRCUIT 2 (NORMAL) OR CIRCUIT 6 (EMERGENCY) DEPENDING ON POSITION OF FIRE TRANSFER SWITCH DG-RMS-DG2/YS56B

[2] TIME DELAY RELAY SETPOINT IS NOMINAL. FOR TIME DELAY RELAY SETTINGS, SEE ES14-30.

	REF DWG	DESCRIPTION
(NOTE 3)	E343-3MB-1	ELEMENTARY DIAG (DG1 AND DG2)
(NOTE 3)	E343-3MB-1	ELEMENTARY DIAG (DG1 AND DG2)
(NOTE 3)	E343-3MB-1	ELEMENTARY DIAG (DG1 AND DG2)
	E343-8	CONN WIRING DIAG (C-TB-D1016, C-TB-D1015)
	E343-10	CONN WIRING DIAG (C-CP-DG1/P2)

Columbia Generating Station Final Safety Analysis Report	DG2 Air Start System Control	
	Draw. No. EWD-47E-0056	Rev. 13
	Figure 8.3-19	

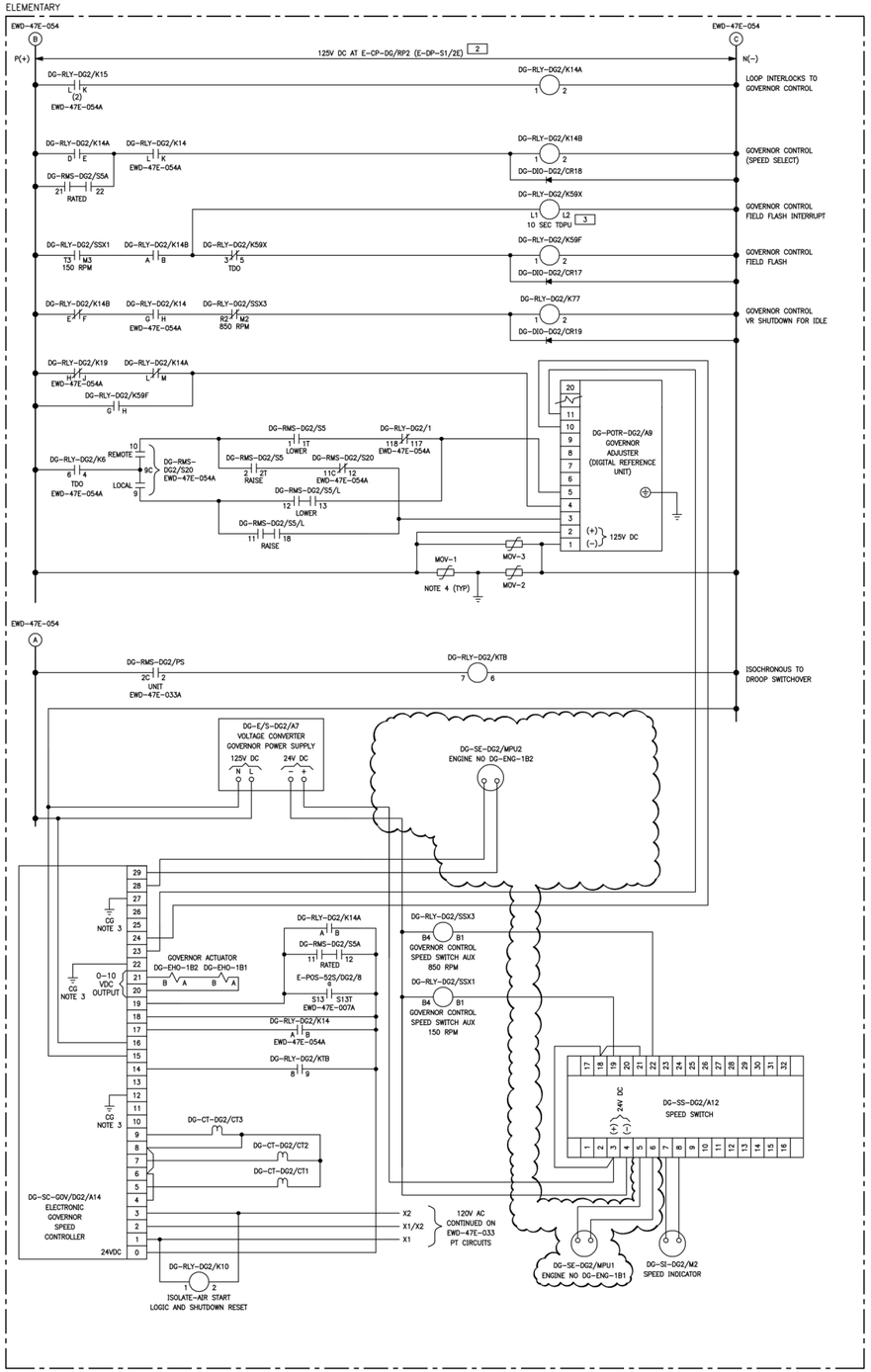

DG-RMS-DG2/S5/L

NORM LOWER | RAISE — ESCUTCHEON

DECK	CONTACTS HANDLE END	POSITION LOWER	NORM	RAISE	DWG
1	11 — 18			X	□
	12 — 13	X			□
	15 — 14			X	SPARE
	16 — 17	X			SPARE

SPRING RETURN TO NORMAL

DG-RMS-DG2/S5A

RATED | IDLE — ESCUTCHEON

DECK	CONTACTS HANDLE END	POSITION RATED	IDLE	DWG
1	11 — 12	X		□
	16 — 17		X	EWD-47E-054
2	21 — 22	X		□
	25 — 26	X		SPARE

MAINTAINED CONTACT

DG-RMS-DG2/S5

NORM LOWER | RAISE — ESCUTCHEON

CONTACTS HANDLE END		POSITION LOWER	NORM	RAISE	DWG
1T 2T	1	X			□
	2			X	□
3T 4T	3	X			SPARE
	4			X	SPARE

SPRING RETURN TO NORMAL

DG-RLY-DG2/K10

STACK	CONTACTS	DWG
1	1 — 2	□
	B — A	SPARE
	C	EWD-47E-033
	E — D	SPARE
	F	SPARE
	H — G	SPARE
	J	EWD-47E-054
	L — K	SPARE
	M	EWD-47E-031
2	B — A	SPARE
	C	SPARE
	E — D	SPARE
	F	SPARE
	H — G	SPARE
	J	SPARE
	L — K	SPARE
	M	SPARE

DG-RLY-DG2/K14A

CONTACTS	DWG
1 — 2	□
B — A	□
C	SPARE
E — D	□
F	SPARE
H — G	SPARE
J	SPARE
L — K	SPARE
M	□

DG-RLY-DG2/K14B

CONTACTS	DWG
1 — 2	□
B — A	□
C	SPARE
E — D	SPARE
F	□
H — G	SPARE
J	SPARE
L — K	EWD-47E-033
M	EWD-47E-033

DG-RLY-DG2/K59F

CONTACTS	DWG
1 — 2	□
B — A	EWD-47E-033
C	SPARE
E — D	SPARE
F	SPARE
H — G	□
J	SPARE
L — K	SPARE
M	SPARE

DG-RLY-DG2/K59X

CONTACTS	DWG
L1 — L2	□
TIME DELAY 5 — 1	SPARE
3	□
6 — 2	SPARE
4	SPARE

DG-RLY-DG2/K77

CONTACTS	DWG
1 — 2	□
B — A	EWD-47E-033
C	SPARE
E — D	SPARE
F	SPARE
H — G	SPARE
J	SPARE
L — K	SPARE
M	SPARE

DG-RLY-DG2/SSX1

CONTACTS	DWG
B1 — B4	□
M1 — T1	EWD-47E-054
R1	SPARE
M2 — T2	SPARE
R2	EWD-47E-054
M3 — T3	□
R3	SPARE
M4 — T4	SPARE
R4	SPARE

DG-RLY-DG2/SSX3

CONTACTS	DWG
B1 — B4	□
M1 — T1	EWD-47E-054
R1	SPARE
M2 — T2	SPARE
R2	□
M3 — T3	SPARE
R3	SPARE
M4 — T4	SPARE
R4	SPARE

DG-RLY-DG2/KTB

CONTACTS	DWG
6 — 7	□
2 — 3	SPARE
1	SPARE
4 — 5	SPARE
8 — 9	□
11 — 10	SPARE
12	SPARE

NOTES:

1. FOR GENERAL NOTES SEE EWD-47E-000.
2. THE INFORMATION CONTAINED ON THIS EWD SUPERSEDES THE INFORMATION OBTAINED FROM THE INDICATED REFERENCE DRAWING.
3. DG-SC-GOV/DG2/A14 ELECTRONIC GOVERNOR SPEED CONTROLLER, TERMINALS 12, 22 & 27 ARE INTERNALLY CONNECTED TO CHASSIS GROUND (CG).
4. MOV-1, -2 AND -3 ARE METAL OXIDE VARISTORS INSTALLED FOR EMC. USE CID 23582, LITTLEFUSE MODEL V151BA60.

LEGEND:

□ SHOWN ON THIS DRAWING

[1] DG-RLY-86/DG2 CONTACT 10/10C IS DUPLICATED ON EWD-47E-055 AND EWD-47E-059 (SHOWN ON EWD-47E-059 FOR CIRCUIT CONTINUITY)

[2] CONTROL POWER SUPPLY MAY BE EITHER CIRCUIT 2 (NORMAL) OR CIRCUIT 6 (EMERGENCY) DEPENDING ON POSITION OF FIRE TRANSFER SWITCH DG-RMS-DG2/FTS56B

[3] TIME DELAY RELAY SETPOINT IS NOMINAL. FOR TIME DELAY RELAY SETTINGS, SEE E514-30.

REF DWG	DESCRIPTION
E537-14B	CONN WIRING DIAG (E-CP-H13/PB01)
E543-7	CONN WIRING DIAG DG2 (E-CP-DG/RP2)
E543-8	CONN WIRING DIAG DG2 (E-TB-D1014, E-TB-D1015)
E543-10	CONN WIRING DIAG DG2 (E-CP-DG/EP2)
(NOTE 2) E543-2VA-5	ELEMENTARY DIAG (DG1 AND DG2)
(NOTE 2) E543-2VB-1	ELEMENTARY DIAG (DG1 AND DG2)
(NOTE 2) E543-2VB-5	ELEMENTARY DIAG (DG1 AND DG2)

Columbia Generating Station
Final Safety Analysis Report

DG2 Governor Speed Control

Draw. No. EWD-47E-058 | Rev. 15 | Figure 8.3-20

ELEMENTARY

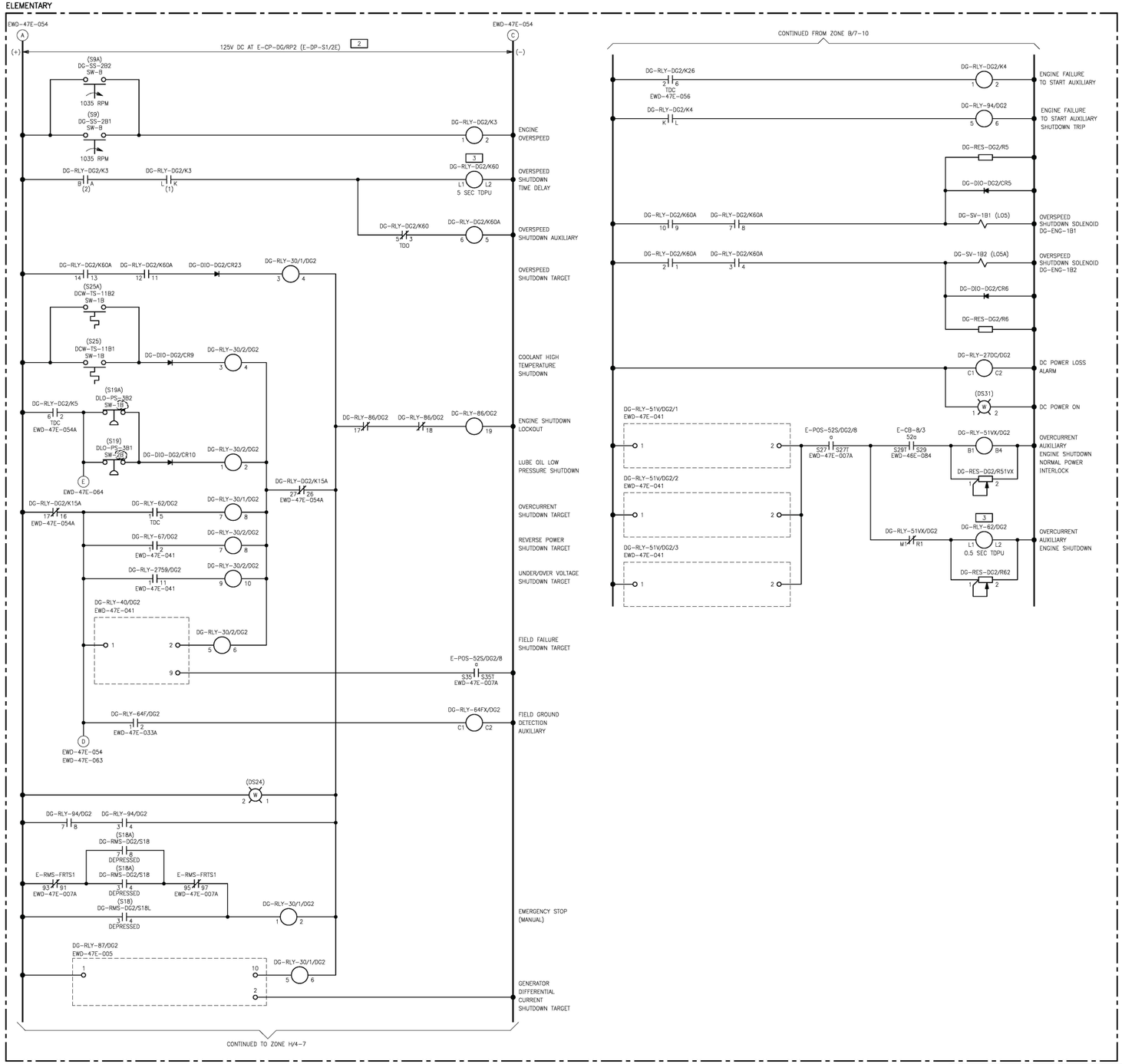

NOTES:

1. FOR GENERAL NOTES SEE EWD-47E-000.
2. THE INFORMATION CONTAINED ON THIS EWD SUPERSEDES THE INFORMATION OBTAINED FROM THE INDICATED REFERENCE DRAWING.
3. FOR RELAY AND SWITCH DEVELOPMENTS SEE EWD-47E-060A.
4. THIS CONDUCTOR IS SHOWN ON MULTIPLE EWD'S FOR CIRCUIT CONTINUITY. SEE APPROPRIATE CABLE SCHEDULE FOR ADDITIONAL EWD'S.

LEGEND:

[1] DG-RLY-DG1/K15A CONTACT 16/17 IS DUPLICATED ON EWD-47E-061 AND EWD-47E-063 (SHOWN ON EWD-47E-063 FOR CIRCUIT CONTINUITY)

[2] CONTROL POWER SUPPLY MAY BE EITHER CIRCUIT 2 (NORMAL) OR CIRCUIT 6 (EMERGENCY) DEPENDING ON POSITION OF FIRE TRANSFER SWITCH DG-RMS-DG2/FTS56B

[3] TIME DELAY RELAY SETPOINT IS NOMINAL. FOR TIME DELAY RELAY SETTINGS, SEE E514-30.

	REF DWG	DESCRIPTION
	E537-14B	CONN WIRING DIAG (E-CP-H13/PB01)
	E537-18B	CONN WIRING DIAG (E-CP-H13/PB05)
	E543-7	CONN WIRING DIAG DG2 (E-CP-DG/RP2)
(NOTE 2)	E543-2VB-3	ELEMENTARY DIAG (DG1 AND DG2)
(NOTE 2)	E543-2VB-6	ELEMENTARY DIAG (DG1 AND DG2)
(NOTE 2)	E543-2VB-7	ELEMENTARY DIAG (DG1 AND DG2)
	E543-8	CONN WIRING DIAG DG2 (E-TB-D1014, E-TB-D1015)
	E543-10	CONN WIRING DIAG DG2 (E-CP-DG/EP2)

Columbia Generating Station
Final Safety Analysis Report

DG2 Unit Protection Circuits

Draw. No. EWD-47E-060 | Rev. 4 | Figure 8.3-21

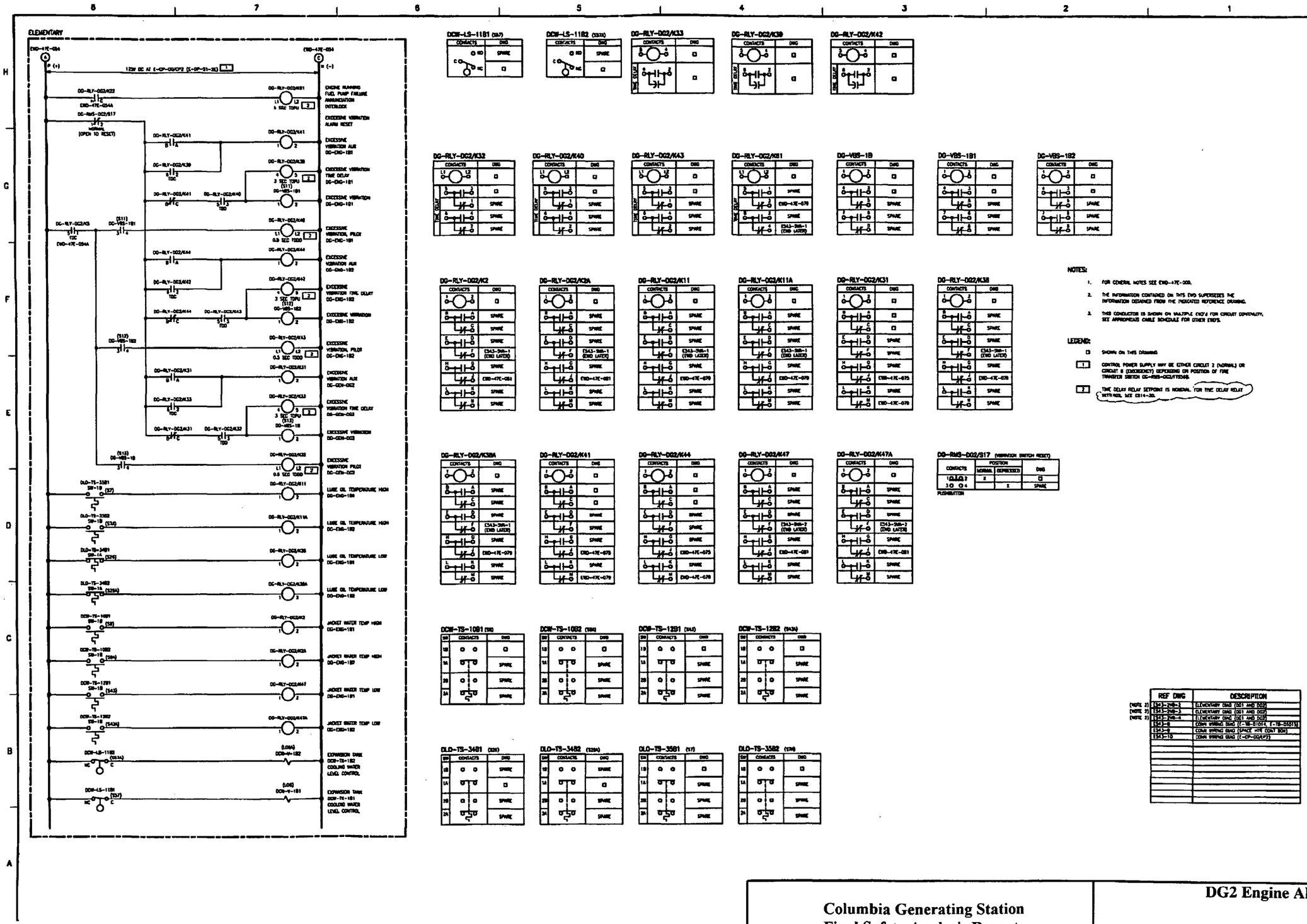

Columbia Generating Station
Final Safety Analysis Report

DG2 Engine Alarms

Draw. No. EWD-47E-0062 | Rev. 1 | Figure 8.3-22.1

Form No. 960690

ELEMENTARY

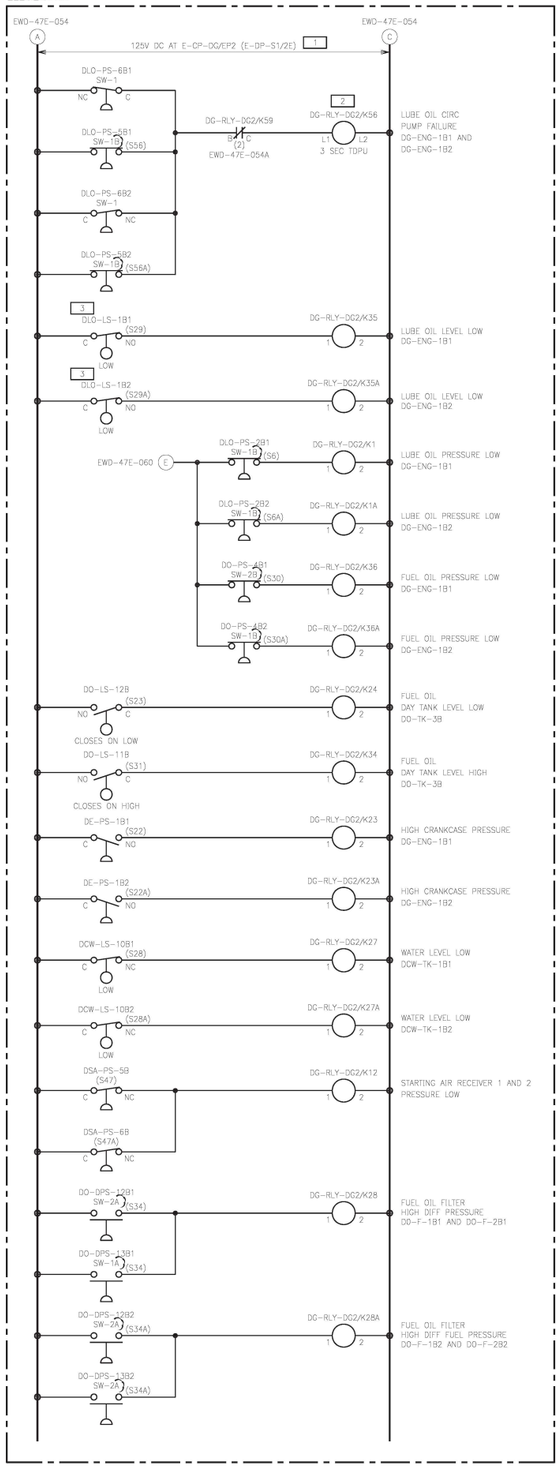

DG-RLY-DG2/K1

CONTACTS	DWG
1 2	□
B A	SPARE
C	SPARE
E D	SPARE
F	E543-5VA-1 (EWD LATER)
H G	SPARE
	EWD-47E-081
J K	SPARE
L M	SPARE

DG-RLY-DG2/K1A

CONTACTS	DWG
1 2	□
B A	SPARE
C	SPARE
E D	SPARE
F	E543-5VA-1 (EWD LATER)
H G	SPARE
	EWD-47E-081
J K	SPARE
L M	SPARE

DG-RLY-DG2/K12

CONTACTS	DWG
1 2	□
B A	SPARE
C	SPARE
E D	SPARE
F	E543-5VA-1 (EWD LATER)
H G	SPARE
	EWD-47E-081
J K	SPARE
L M	SPARE

DG-RLY-DG2/K23

CONTACTS	DWG
1 2	□
B A	SPARE
C	SPARE
E D	SPARE
F	E543-5VA-1 (EWD LATER)
H G	SPARE
	EWD-47E-081
J K	SPARE
L M	SPARE

DG-RLY-DG2/K23A

CONTACTS	DWG
1 2	□
B A	SPARE
C	SPARE
E D	SPARE
F	E543-5VA-1 (EWD LATER)
H G	SPARE
	EWD-47E-081
J K	SPARE
L M	SPARE

DG-RLY-DG2/K24

CONTACTS	DWG
1 2	□
B A	SPARE
C	EWD-47E-073
E D	SPARE
F	E543-5VA-1 (EWD LATER)
H G	SPARE
	EWD-47E-081
J K	SPARE
L M	SPARE

DG-RLY-DG2/K27

CONTACTS	DWG
1 2	□
B A	SPARE
C	SPARE
E D	SPARE
F	E543-5VA-1 (EWD LATER)
H G	SPARE
	EWD-47E-081
J K	SPARE
L M	SPARE

DG-RLY-DG2/K27A

CONTACTS	DWG
1 2	□
B A	SPARE
C	SPARE
E D	SPARE
F	E543-5VA-1 (EWD LATER)
H G	SPARE
	EWD-47E-081
J K	SPARE
L M	SPARE

DG-RLY-DG2/K28

CONTACTS	DWG
1 2	□
B A	SPARE
C	SPARE
E D	SPARE
F	E543-5VA-1 (EWD LATER)
H G	SPARE
	EWD-47E-081
J K	SPARE
L M	SPARE

DG-RLY-DG2/K28A

CONTACTS	DWG
1 2	□
B A	SPARE
C	SPARE
E D	SPARE
F	E543-5VA-1 (EWD LATER)
H G	SPARE
	EWD-47E-081
J K	SPARE
L M	SPARE

DG-RLY-DG2/K34

CONTACTS	DWG
1 2	□
B A	SPARE
C	EWD-47E-075
E D	SPARE
F	E543-5VA-1 (EWD LATER)
H G	SPARE
	EWD-47E-081
J K	SPARE
L M	SPARE

DG-RLY-DG2/K35

CONTACTS	DWG
1 2	□
B A	SPARE
C	SPARE
E D	SPARE
F	E543-5VA-1 (EWD LATER)
H G	SPARE
	EWD-47E-081
J K	SPARE
L M	SPARE

DG-RLY-DG2/K35A

CONTACTS	DWG
1 2	□
B A	SPARE
C	SPARE
E D	SPARE
F	E543-5VA-1 (EWD LATER)
H G	SPARE
	EWD-47E-081
J K	SPARE
L M	SPARE

DG-RLY-DG2/K36

CONTACTS	DWG
1 2	□
B A	SPARE
C	SPARE
E D	SPARE
F	E543-5VA-1 (EWD LATER)
H G	SPARE
	EWD-47E-081
J K	SPARE
L M	SPARE

DG-RLY-DG2/K36A

CONTACTS	DWG
1 2	□
B A	SPARE
C	SPARE
E D	SPARE
F	E543-5VA-1 (EWD LATER)
H G	SPARE
	EWD-47E-081
J K	SPARE
L M	SPARE

DG-RLY-DG2/K56

CONTACTS	DWG
L1 L2	□
TIME DELAY 5 1	SPARE
	EWD-47E-079
6 2	SPARE
4	E543-5VA-1 (EWD LATER)

DCW-LS-10B1 (S28)

CONTACTS	DWG
NO	SPARE
C NC	□

DCW-LS-10B2 (S28A)

CONTACTS	DWG
NO	SPARE
C NC	□

DLO-LS-1B1 (S29)

CONTACTS	DWG
NC	SPARE
C NO	□

3

DLO-LS-1B2 (S29A)

CONTACTS	DWG
NC	SPARE
C NO	□

3

DO-LS-11B (S31)

CONTACTS	DWG
NO	□
C NC	SPARE

DO-LS-12B (S23)

CONTACTS	DWG
NO	□
C NC	SPARE

DO-DPS-12B1 (S34)

SW	CONTACTS	DWG
1B		SPARE
1A		SPARE
2A		□
2B		SPARE

DO-DPS-12B2 (S34A)

SW	CONTACTS	DWG
1B		SPARE
1A		SPARE
2A		□
2B		SPARE

DO-DPS-13B1 (S34)

SW	CONTACTS	DWG
1B		SPARE
1A		□
2A		SPARE
2B		SPARE

DO-DPS-13B2 (S34A)

SW	CONTACTS	DWG
1B		SPARE
1A		SPARE
2A		□
2B		SPARE

DE-PS-1B1 (S22)

CONTACTS	DWG
NO	□
C NC	SPARE

DE-PS-1B2 (S22A)

CONTACTS	DWG
NO	□
C NC	SPARE

DLO-PS-2B1 (S6)

SW	CONTACTS	DWG
1B		□
1A		SPARE
2A		SPARE
2B		SPARE

DLO-PS-2B2 (S6A)

SW	CONTACTS	DWG
1B		□
1A		SPARE
2A		SPARE
2B		SPARE

DLO-PS-5B1 (S56)

SW	CONTACTS	DWG
1B		□
1A		SPARE
2A		EWD-47E-070
2B		SPARE

DLO-PS-5B2 (S56A)

SW	CONTACTS	DWG
1B		□
1A		SPARE
2A		EWD-47E-071
2B		SPARE

DLO-PS-6B1

SW	CONTACTS	DWG
1	C NO NC	SPARE □
2	C NO NC	SPARE SPARE

DLO-PS-6B2

SW	CONTACTS	DWG
1	C NO NC	SPARE □
2	C NO NC	SPARE SPARE

DO-PS-4B1 (S30)

SW	CONTACTS	DWG
1B		SPARE
1A		SPARE
2A		SPARE
2B		□

DO-PS-4B2 (S30A)

SW	CONTACTS	DWG
1B		SPARE
1A		SPARE
2A		SPARE
2B		□

DSA-PS-5B (S47)

CONTACTS	DWG
NO	SPARE
C NC	□

DSA-PS-6B (S47A)

CONTACTS	DWG
NO	SPARE
C NC	□

NOTES:

1. FOR GENERAL NOTES SEE EWD-47E-000.
2. THE INFORMATION CONTAINED ON THIS EWD SUPERSEDES THE INFORMATION OBTAINED FROM THE INDICATED REFERENCE DRAWING.
3. THIS CONDUCTOR IS SHOWN ON MULTIPLE EWD'S FOR CIRCUIT CONTINUITY. SEE APPROPRIATE CABLE SCHEDULE FOR ADDITIONAL EWD'S.

LEGEND:

□ SHOWN ON THIS DRAWING

[1] CONTROL POWER SUPPLY MAY BE EITHER CIRCUIT 2 (NORMAL) OR CIRCUIT 6 (EMERGENCY) DEPENDING ON POSITION OF FIRE TRANSFER SWITCH DG-RMS-DG2/FTS56B

[2] TIME DELAY RELAY SETPOINT IS NOMINAL. FOR TIME DELAY RELAY SETTINGS, SEE E514-30.

[3] VENDOR CONTACT DESIGNATED "NO" IS NORMALLY CLOSED AT SHELF STATE.

REF DWG	DESCRIPTION
(NOTE 2) E543-2VB-2	ELEMENTARY DIAG (DG1 AND DG2)
(NOTE 2) E543-2VB-3	ELEMENTARY DIAG (DG1 AND DG2)
(NOTE 2) E543-2VB-4	ELEMENTARY DIAG (DG1 AND DG2)
E543-8	CONN WIRING DIAG (E-1B-01014, E-1B-01015)
E543-9	CONN WIRING DIAG
E543-10	CONN WIRING DIAG (E-CP-DG/EP2)

Columbia Generating Station
Final Safety Analysis Report

DG2 Engine Alarms

Draw. No. EWD-47E-064 | Rev. 4 | Figure 8.3-22.2

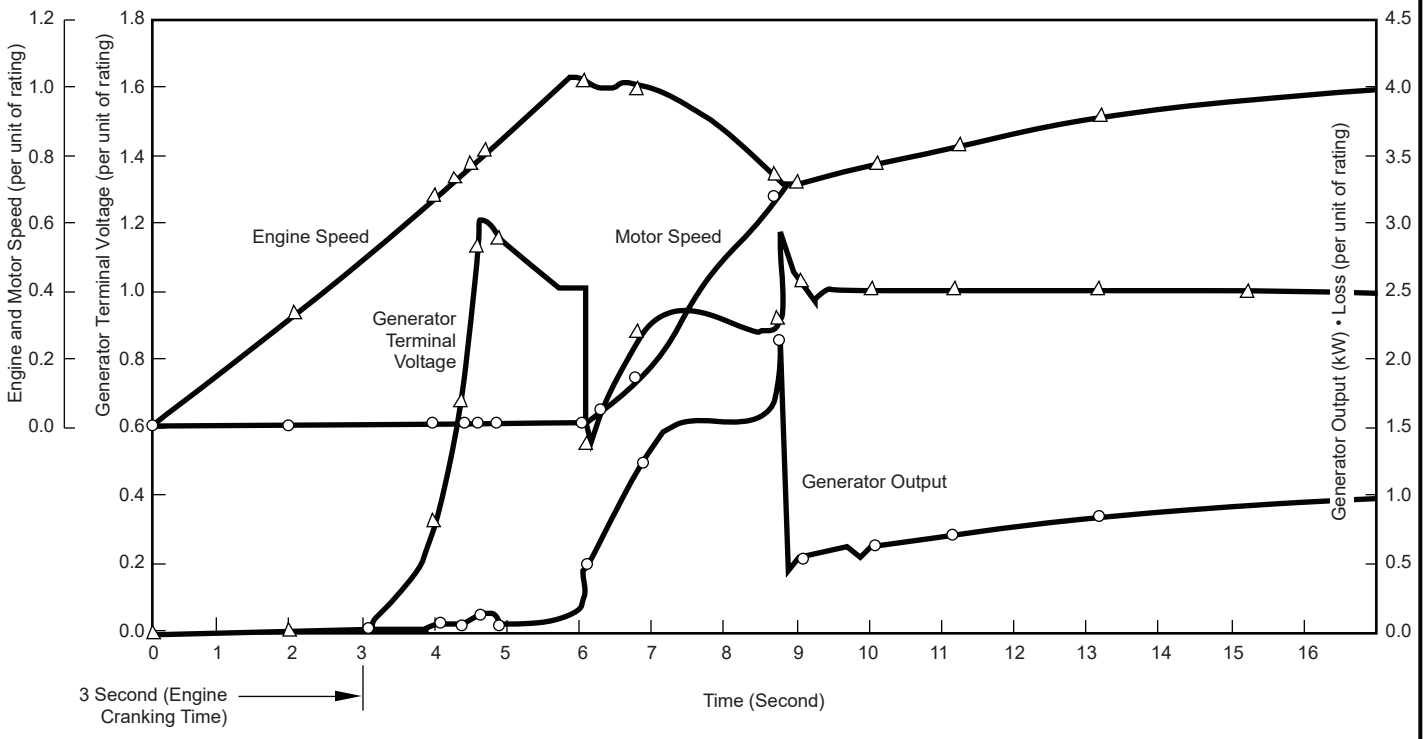

Columbia Generating Station Final Safety Analysis Report	Division 3 (HPCS) Diesel Generator Transient Response		
	Draw. No. 920843.47	Rev.	Figure 8.3-31

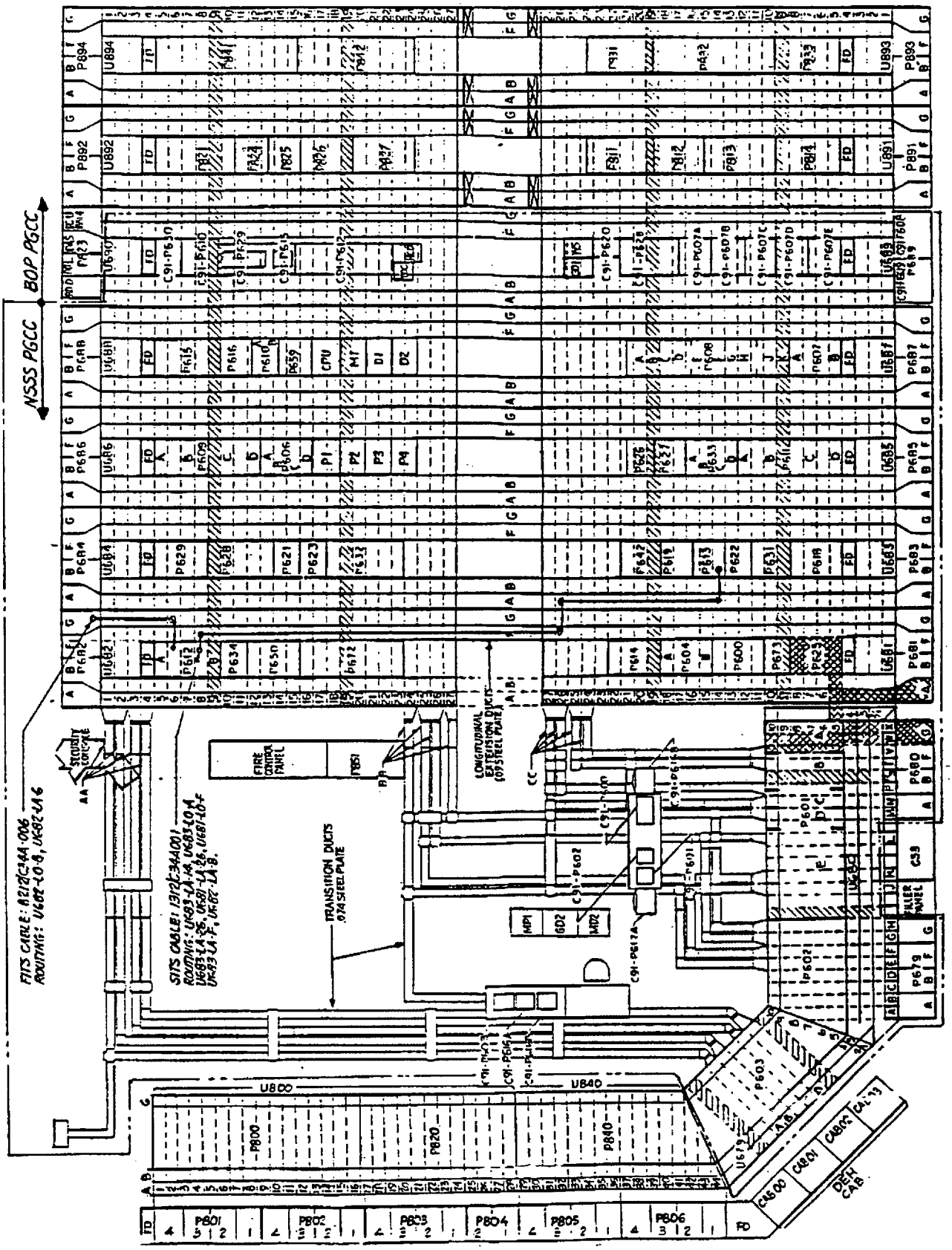

Columbia Generating Station
Final Safety Analysis Report

Power Generation Control Complex Plan - Cable Routing Detail

Draw. No. 020361.52	Rev.	Figure 8.3-39

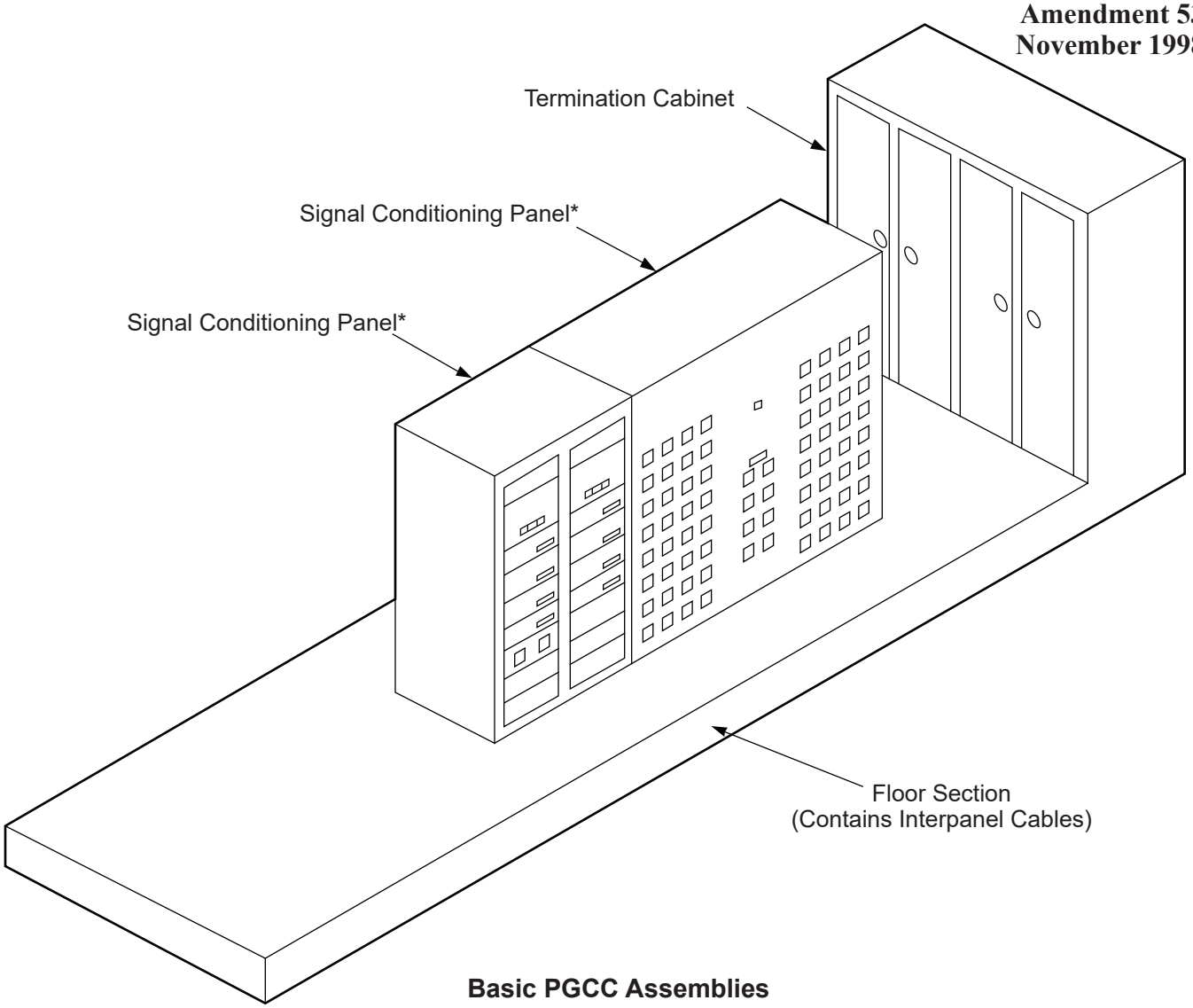

Basic PGCC Assemblies

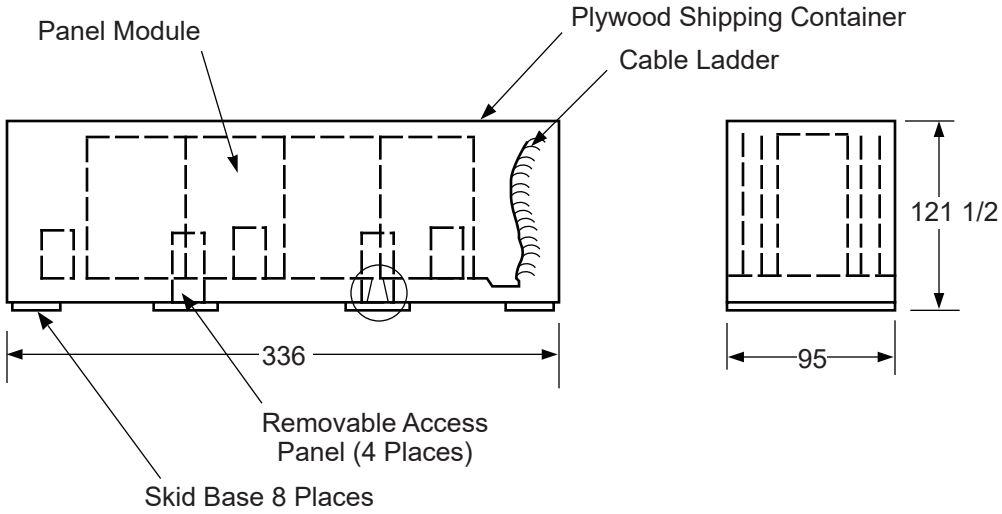

Columbia Generating Station Final Safety Analysis Report	Power Generation Control Complex Basic Assemblies and Shipping Configuration		
	Draw. No. 920843.87	Rev.	Figure 8.3-40

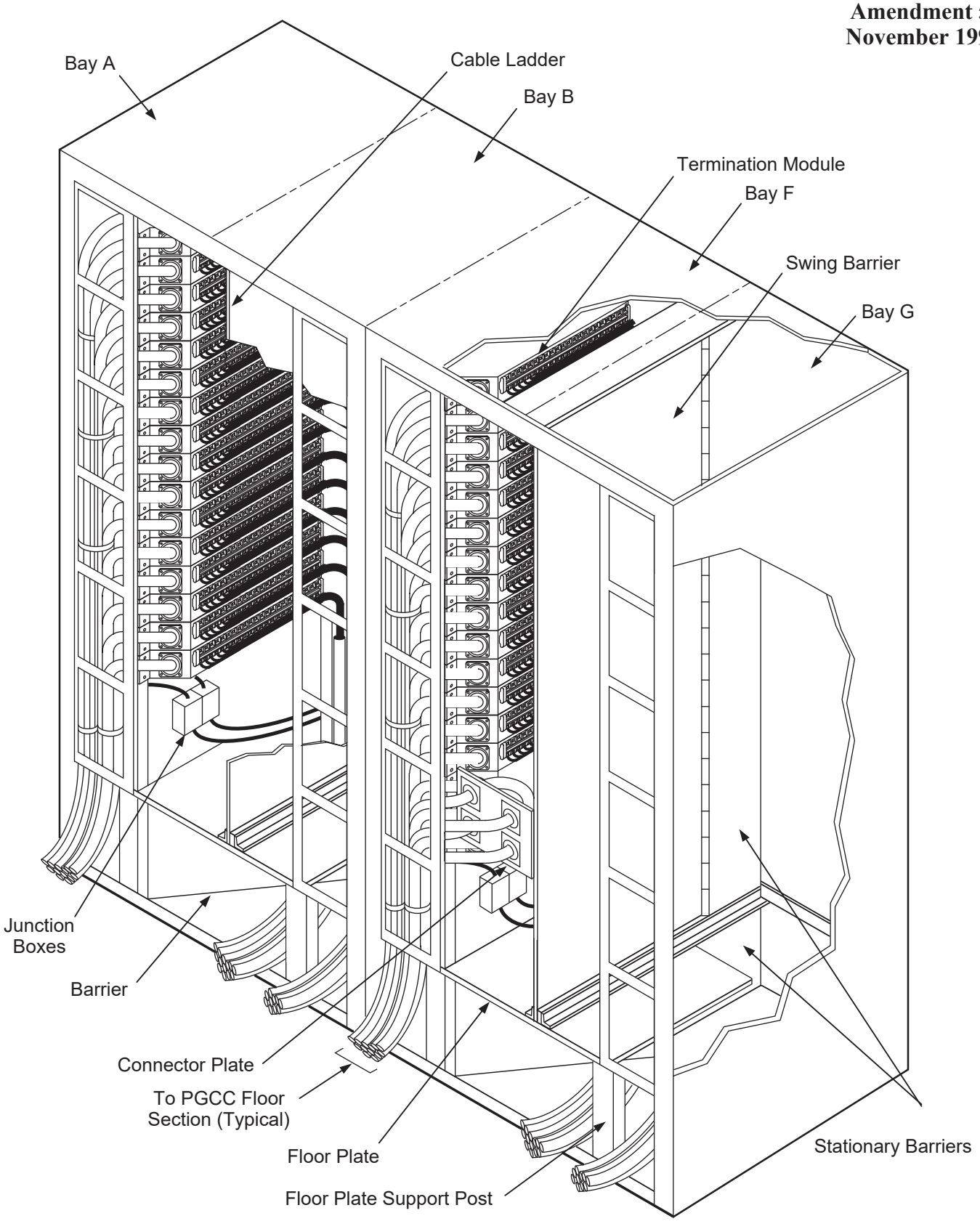

Assembled Termination Cabinet (Door Removed for Clarity)

Columbia Generating Station Final Safety Analysis Report	Power Generation Control Complex Termination Cabinet Assembly		
	Draw. No. 920843.85	Rev.	Figure 8.3-41

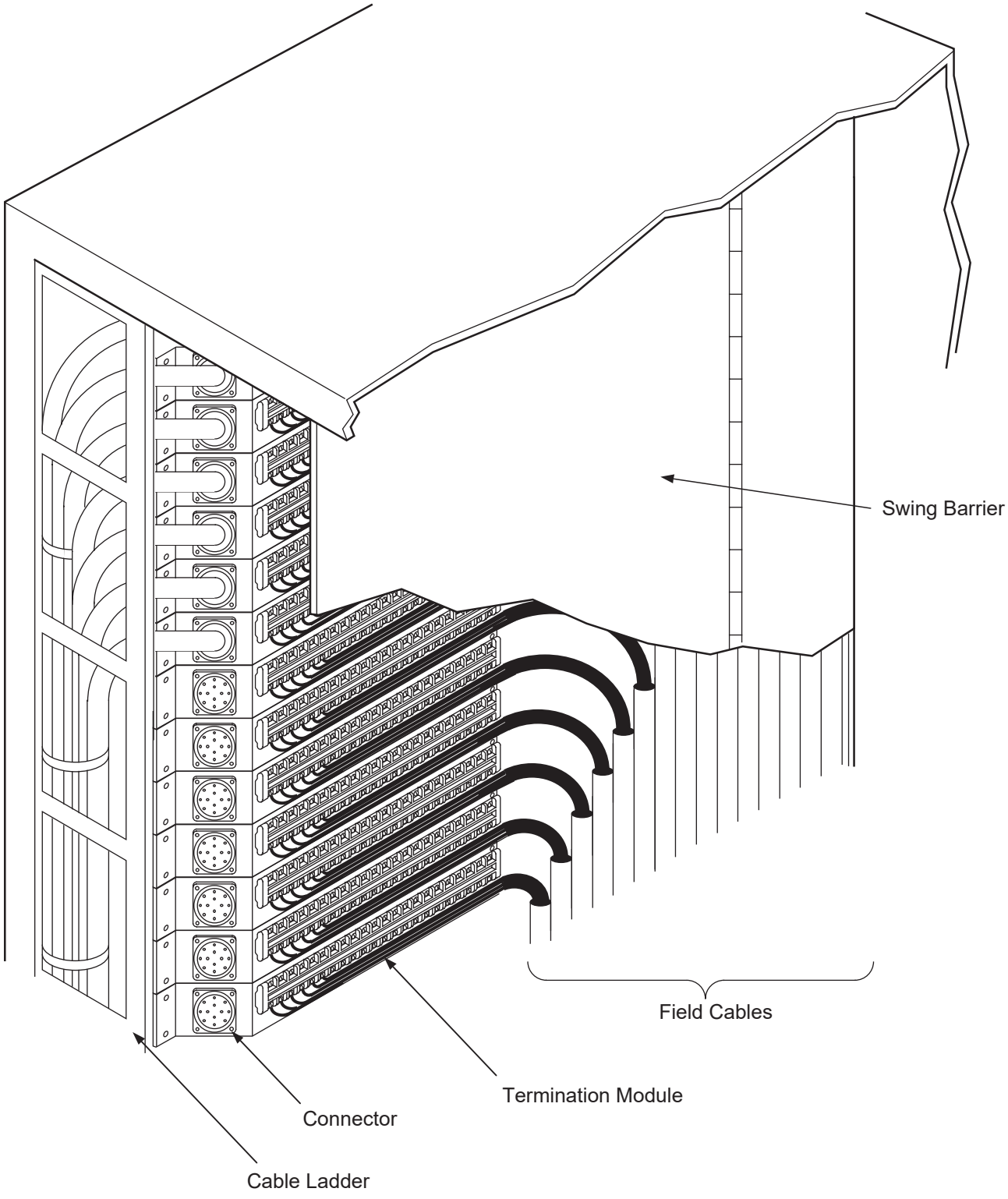

Termination Cabinet Assembly (Field Connections)

Columbia Generating Station Final Safety Analysis Report	**Power Generation Control Complex Termination Cabinet Field Connection**		
	Draw. No. 920843.84	Rev.	Figure 8.3-42

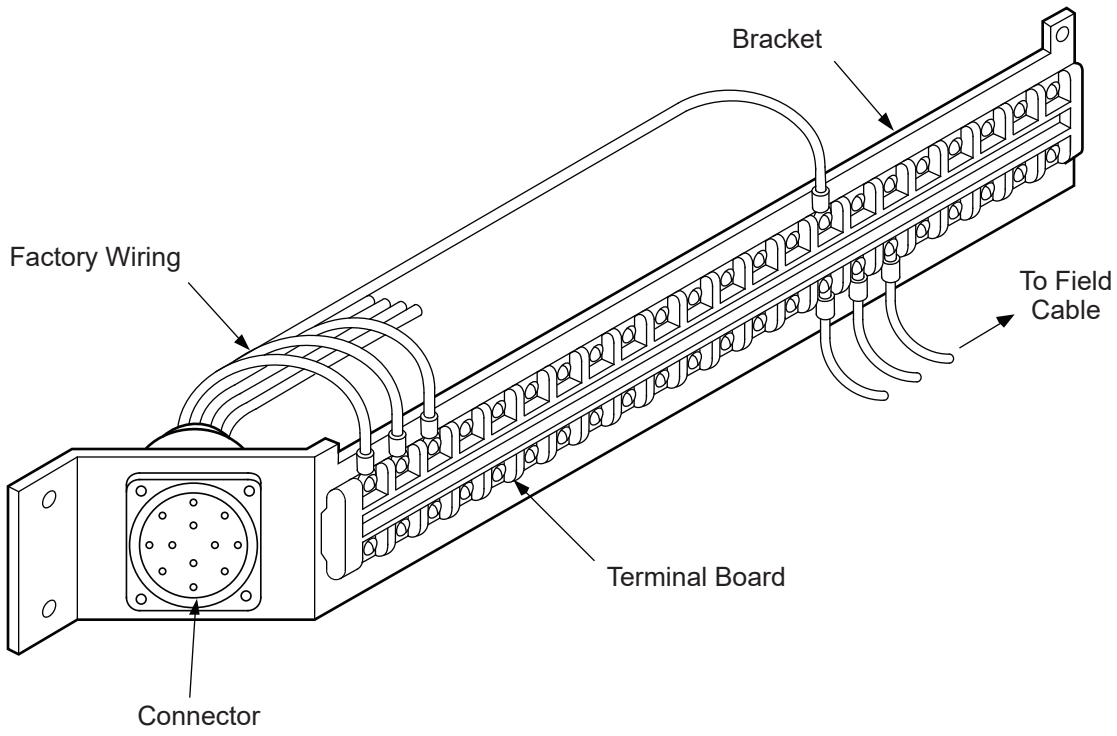

Termination Module

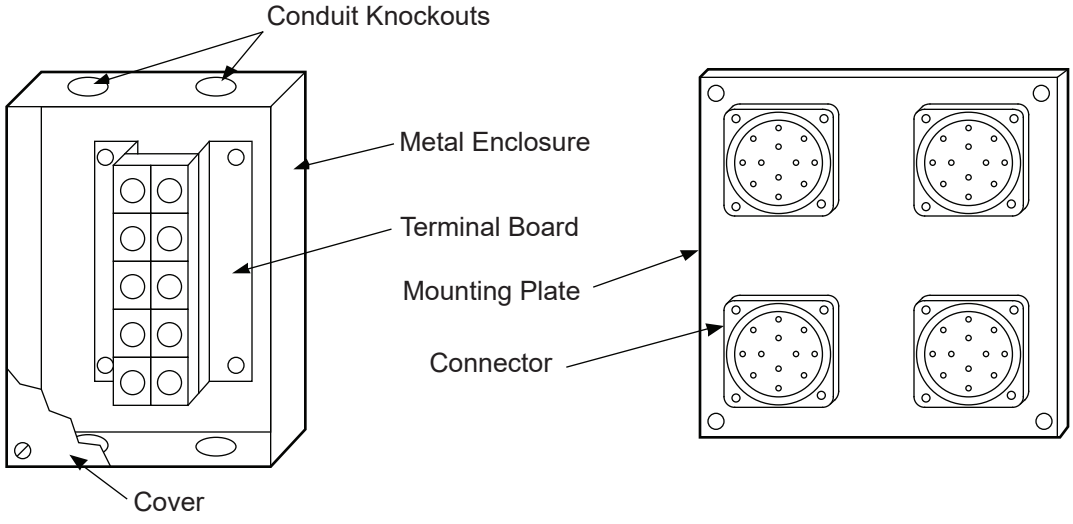

Junction Box **Connector Plate**

Termination Devices

Columbia Generating Station Final Safety Analysis Report	Power Generation Control Complex Termination Cabinet - Termination Devices		
	Draw. No. 920843.83	Rev.	Figure 8.3-43

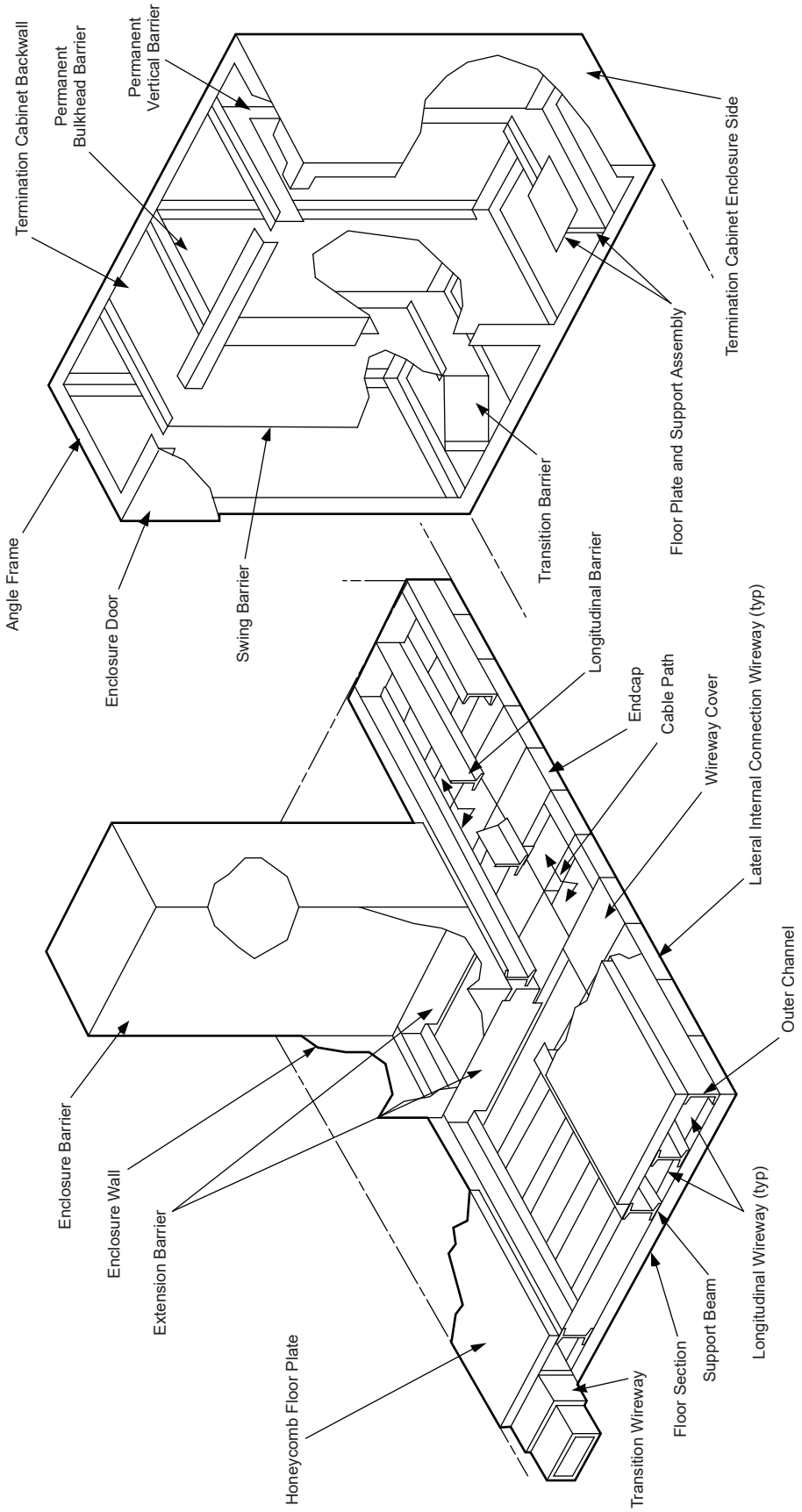

Columbia Generating Station
Final Safety Analysis Report

Power Generation Control Complex
Cable Isolation Design

Draw. No. 920843.86	Rev.	Figure 8.3-44

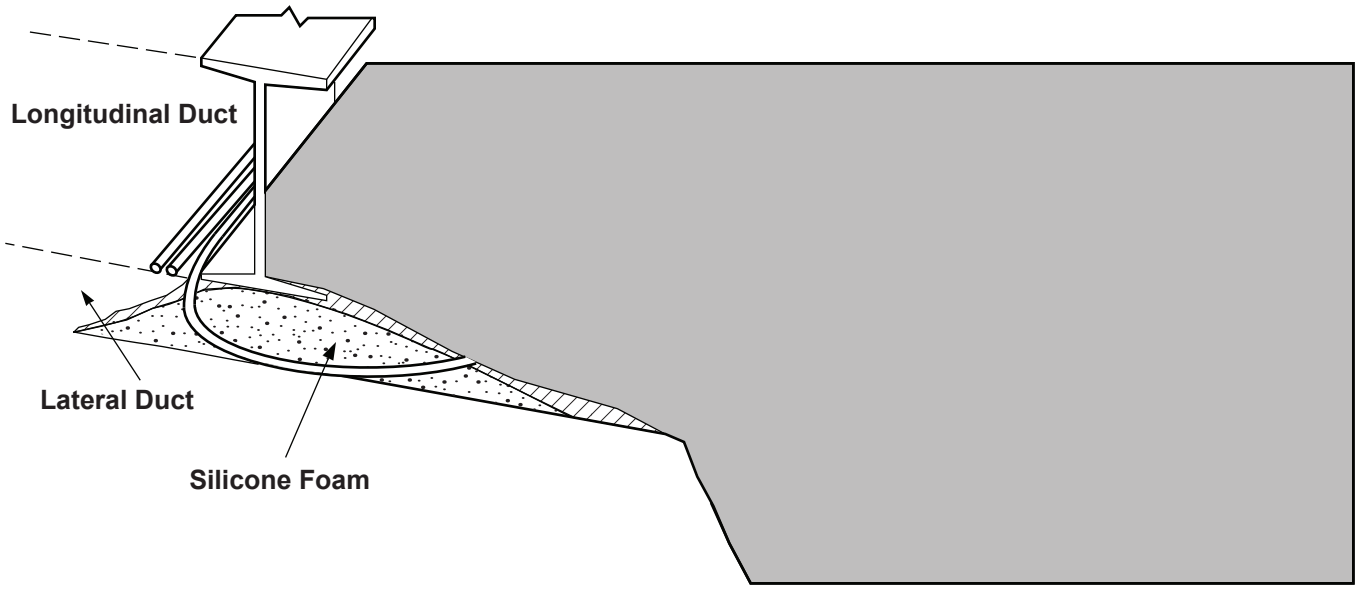

Columbia Generating Station Final Safety Analysis Report	Power Generation Control Complex - Firestopping Detail		
	Draw. No. 920843.91	Rev.	Figure 8.3-45

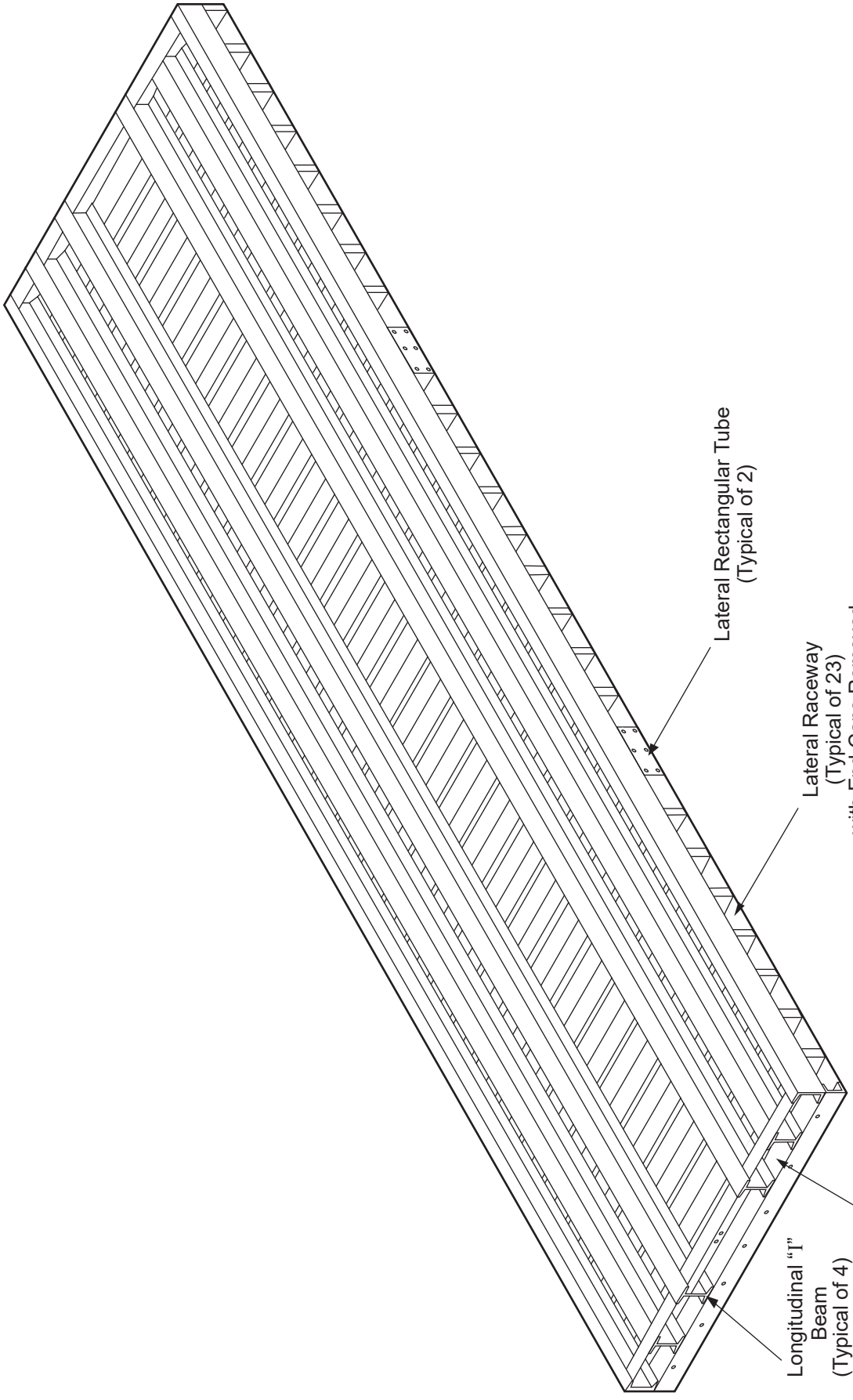

Floor Section Assembly

Columbia Generating Station **Final Safety Analysis Report**	**Power Generation Control Complex** **Floor Section Assembly**		
	Draw. No. **920843.88**	Rev.	Figure **8.3-46**

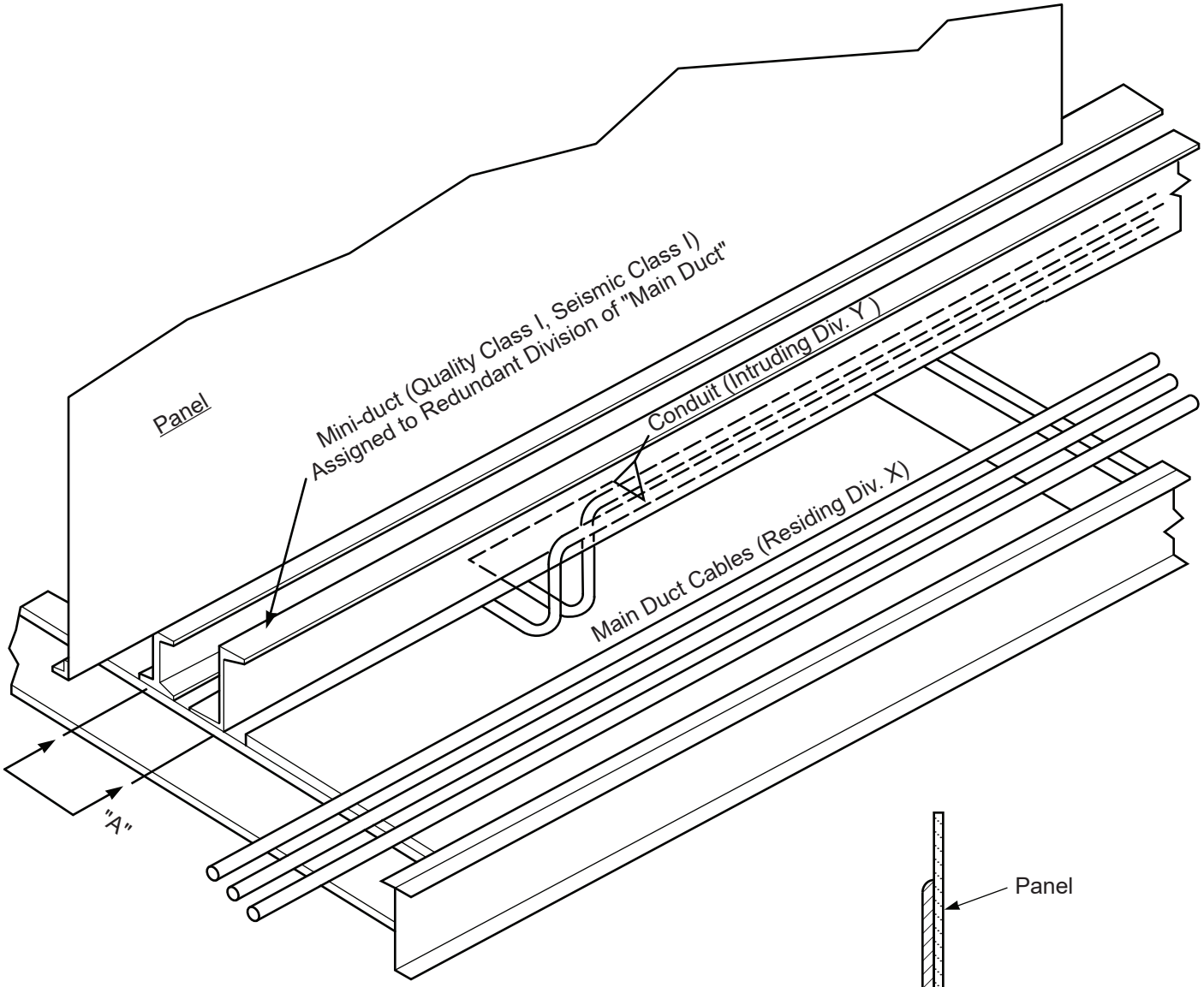

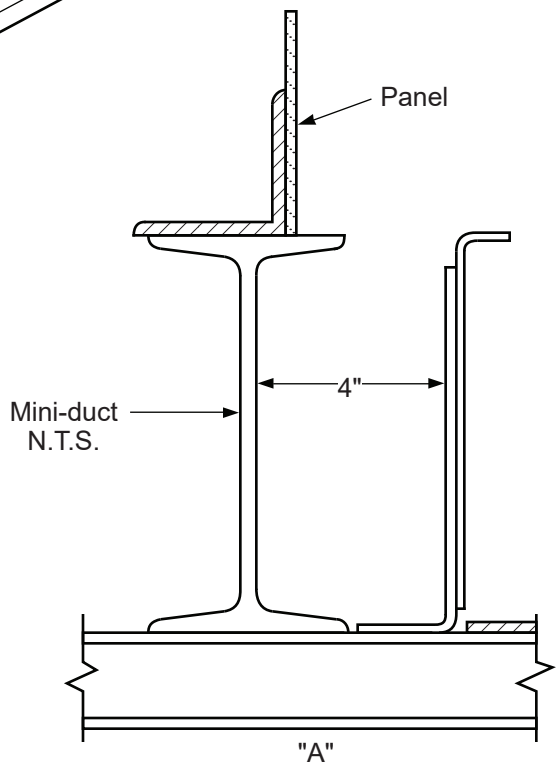

Note: The mini-duct is used to route cables of one division through a main-duct assigned to a redundant division.

Columbia Generating Station Final Safety Analysis Report	**Power Generation Control Complex Mini-duct Detail**		
	Draw. No. **920843.89**	Rev.	Figure **8.3-47**

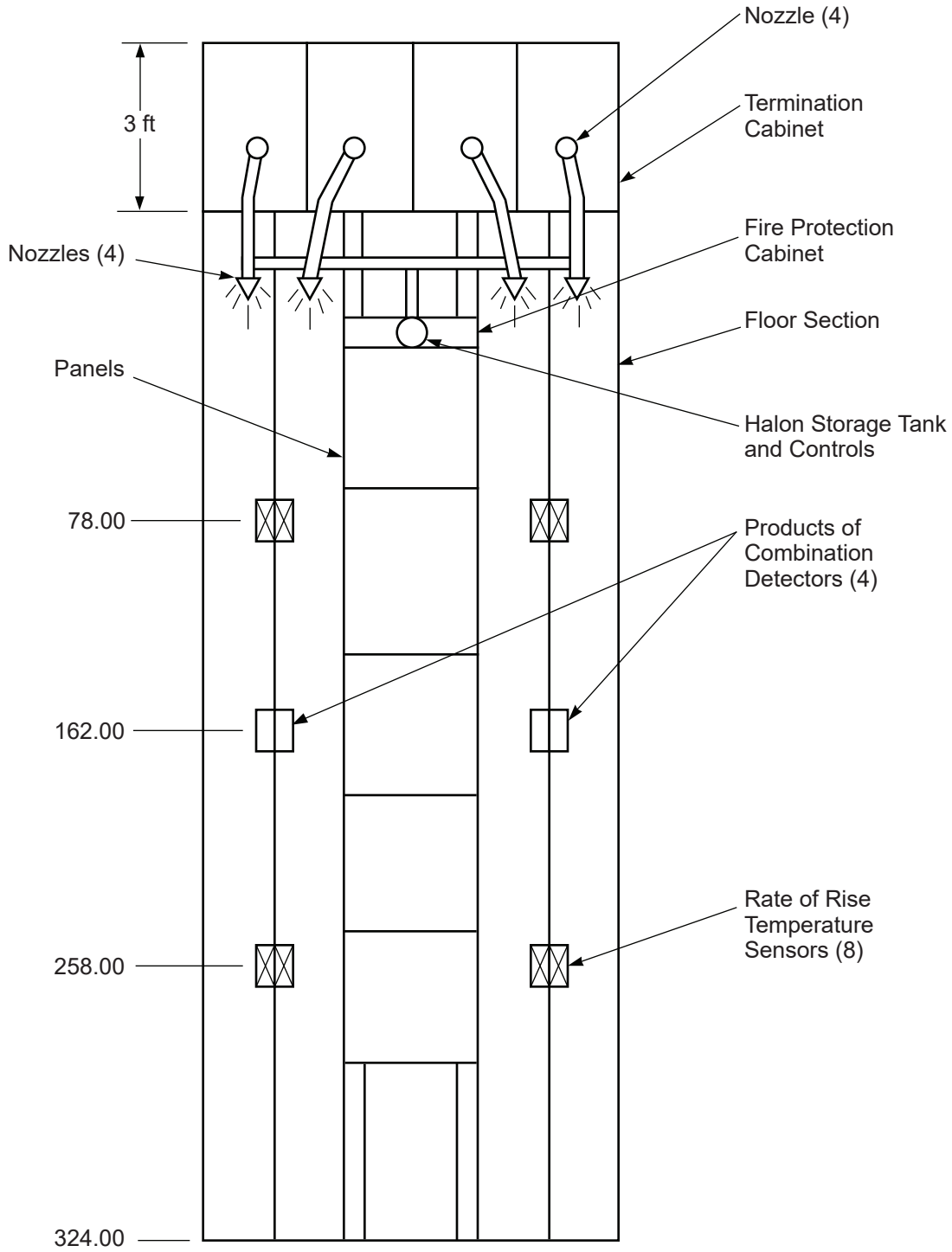

Fire Suppression

Columbia Generating Station Final Safety Analysis Report	**Power Generation Control Complex Fire Suppression**		
	Draw. No. 920843.90	Rev.	Figure 8.3-48

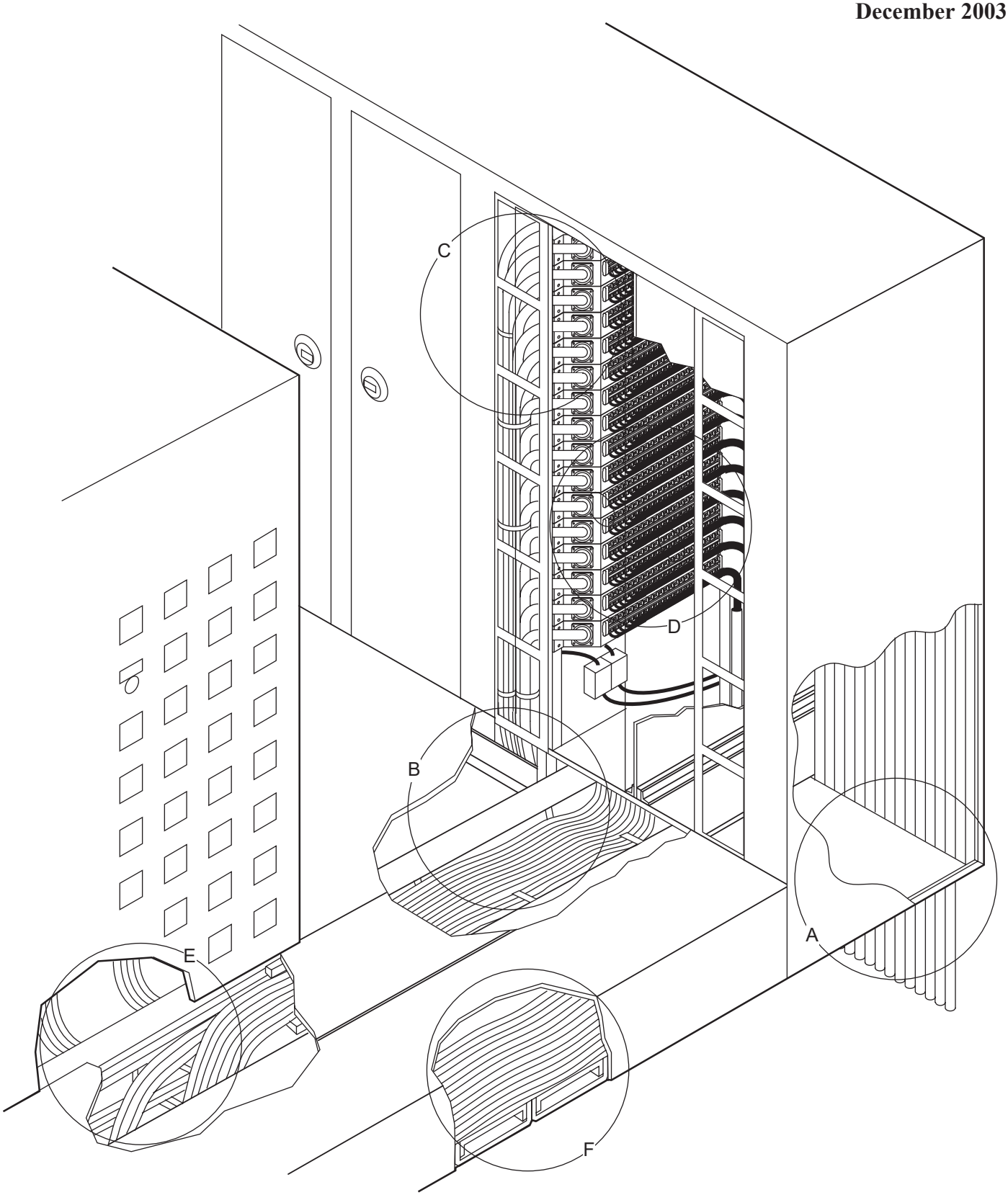

Columbia Generating Station Final Safety Analysis Report	Power Generation Control Complex Cable Routing Method		
	Draw. No. 920843.99	Rev.	Figure 8.3-49

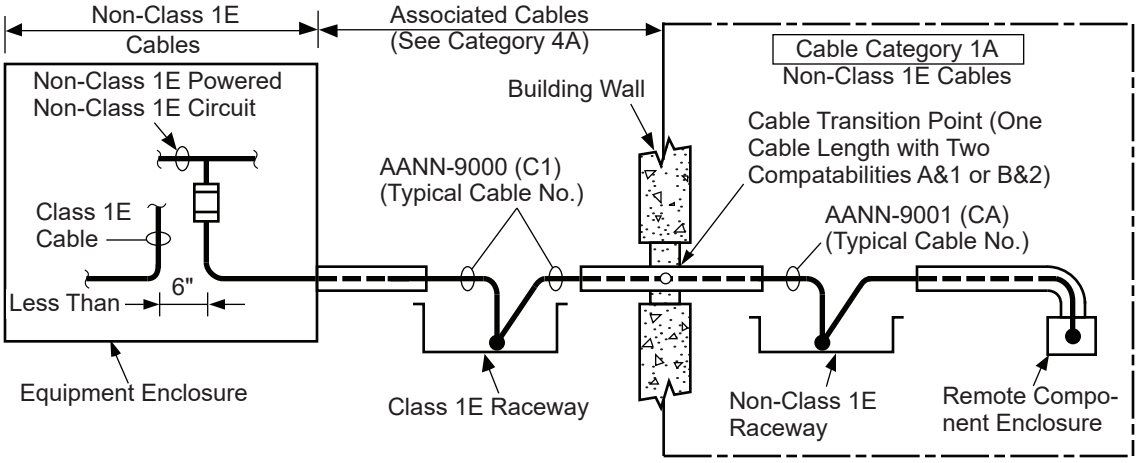

Non-Class 1E (Non-Class 1E Powered) Instrumentation and Control Cables
Cable Category 1A (Raceways)

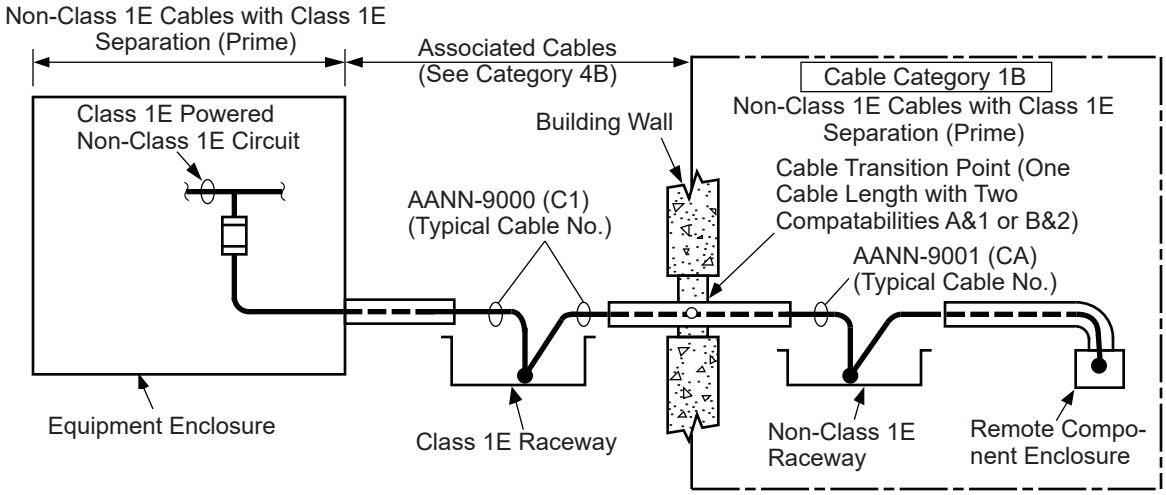

Non-Class 1E (Class 1E Powered) Instrumentation & Control Cables
Cable Category 1B (Raceways)

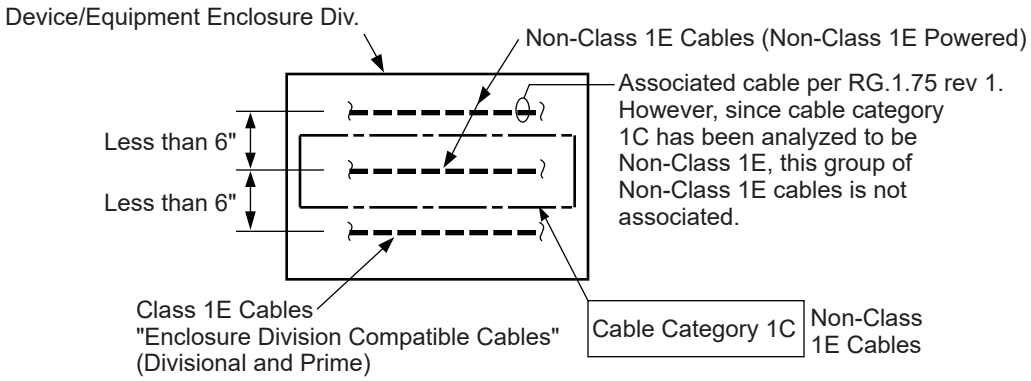

Non-Class 1E (Non-Class 1E Powered) Instrumentation & Control Circuits
Cable Category 1C (Enclosures)

Columbia Generating Station **Final Safety Analysis Report**	**Non-Class 1E Circuit Categories Requiring Analysis**		
	Draw. No. 920843.93	**Rev.**	**Figure 8.3-50.1**

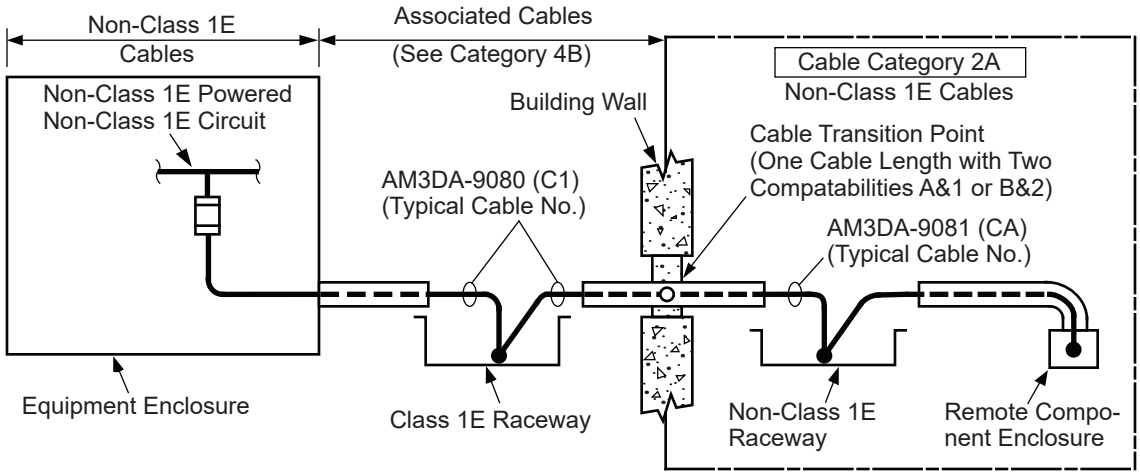

Non-Class 1E (Non-Class 1E Powered) Power Cables (in Non-Class 1E Raceways) Cable Category 2A

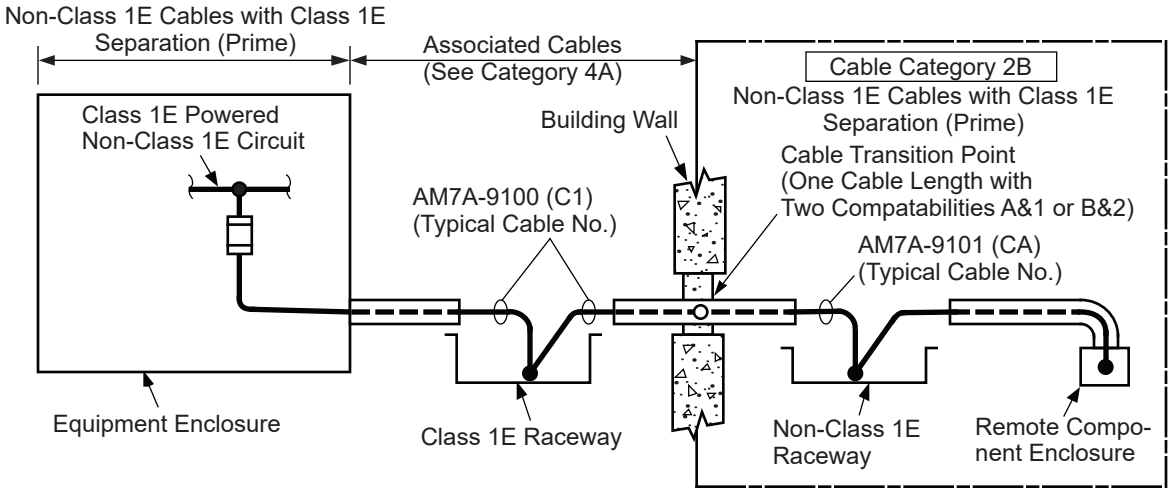

Non-Class 1E (Class 1E Powered) Power Cables (in Non-Class 1E Raceways) Cable Category 2B

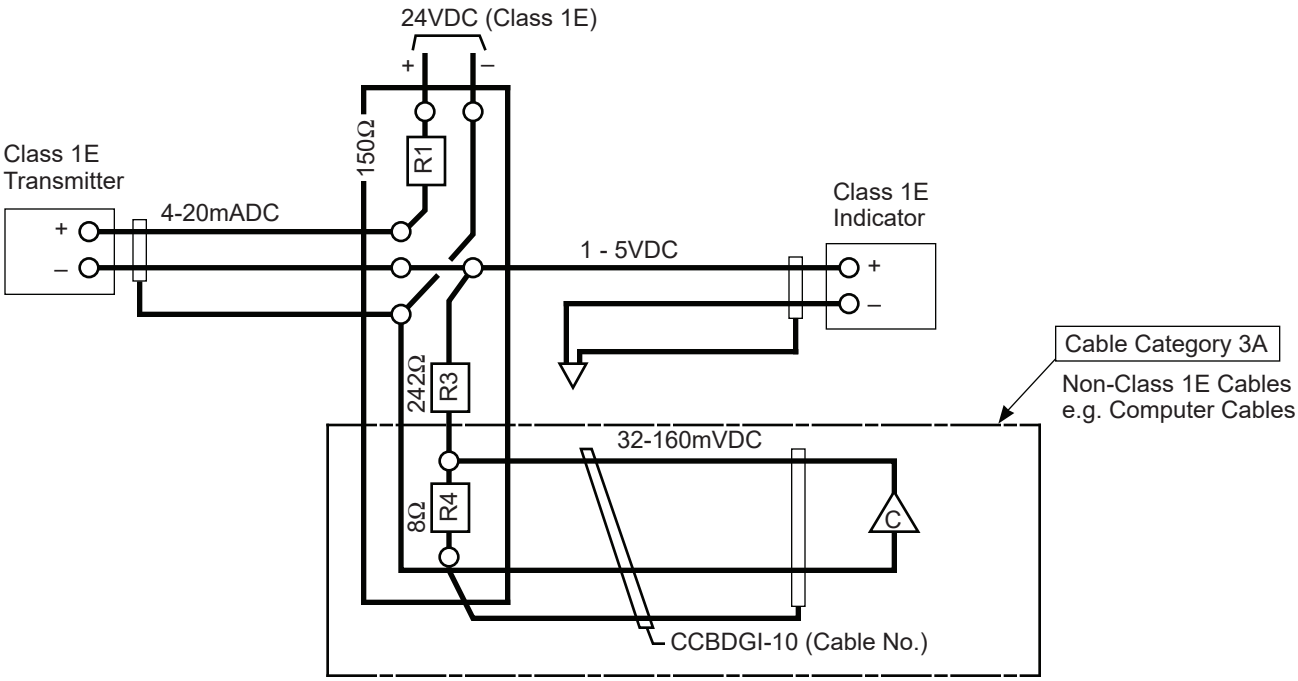

Non-Class 1E Instrumentation Circuits Powered from Class 1E through Current Limiting Devices-Cable Category 3A

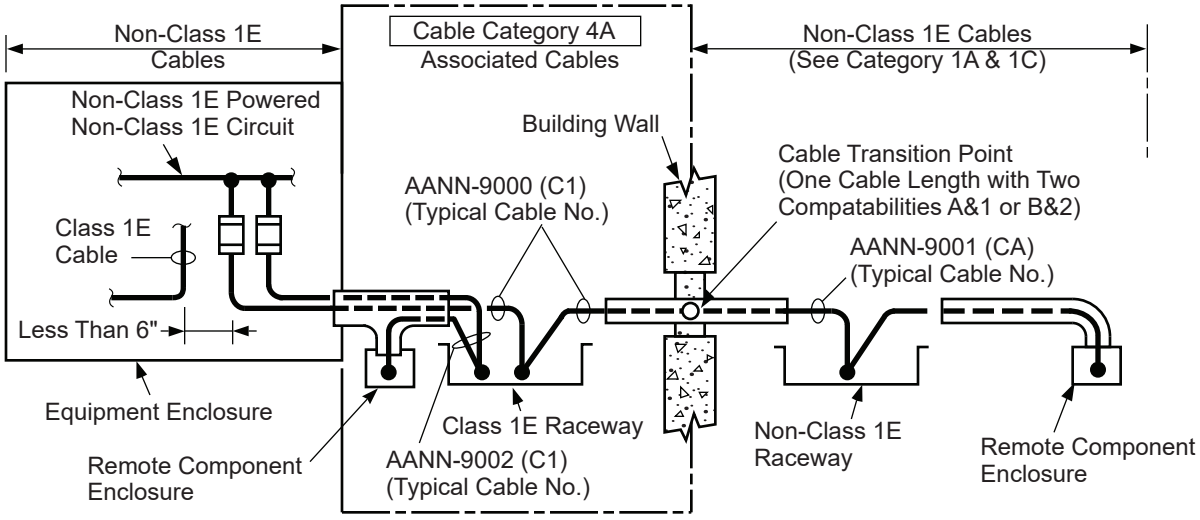

Associated (Non-Class 1E Powered) Instrumentation & Control Cables
Cable Category 4A (Raceway)

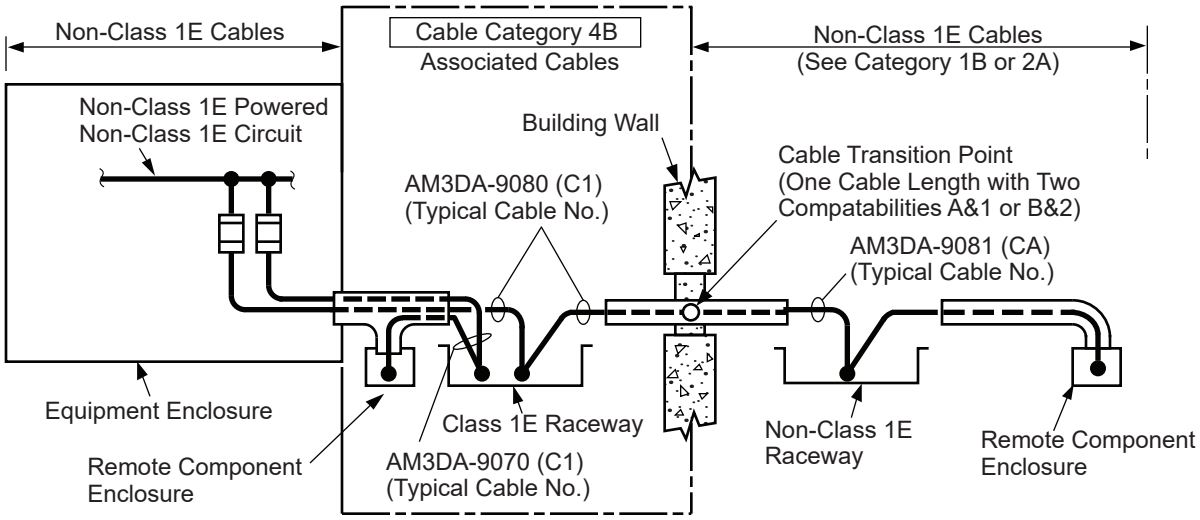

Associated (Non-Class 1E Powered) Power Cables (In Class 1E Raceways)
Cable Category 4B

Columbia Generating Station Final Safety Analysis Report	Associated Circuit Categories		
	Draw. No. 920843.96	Rev.	Figure 8.3-51.1

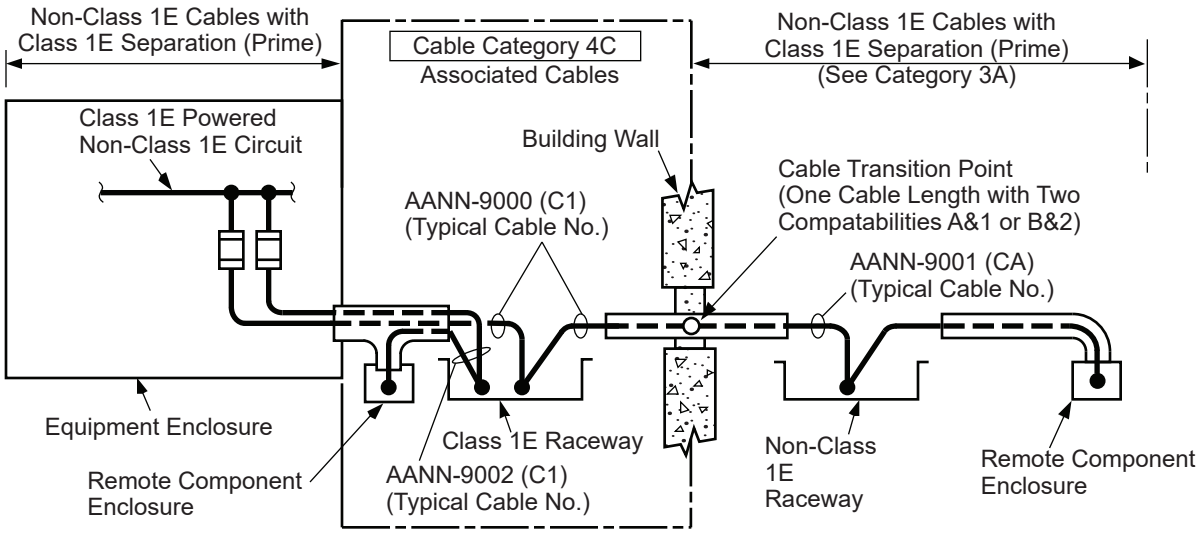

Associated (Class 1E Powered) Instrumentation & Control Cables
Cable Category 4C (Raceways)

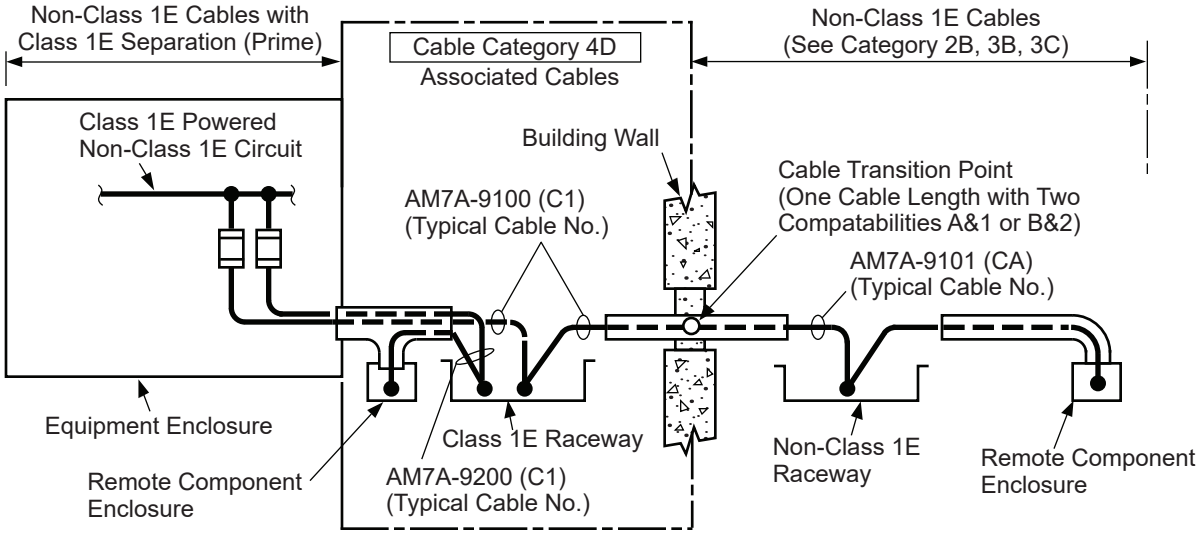

Associated (Class 1E Powered) Power Cables (In Class 1E Raceways)
Cable Category 4D

Columbia Generating Station **Final Safety Analysis Report**	**Associated Circuit Categories**		
	Draw. No. 920843.97	**Rev.**	**Figure** 8.3-51.2

Appendix 8A

STATION BLACKOUT

TABLE OF CONTENTS

Section — Page

8A.1 INTRODUCTION 8A-1
8A.2 EVALUATION TO NUMARC 87-00 ..... 8A-4
8A.2.1 REQUIRED COPING DURATION 8A-4
8A.2.2 RESPONSE PROCEDURES 8A-4
8A.2.3 COLD STARTS 8A-5
8A.2.4 EMERGENCY ALTERNATING CURRENT POWER AVAILABILITY 8A-5
8A.2.5 COPING WITH A STATION BLACKOUT EVENT 8A-6
8A.2.5.1 Condensate Inventory 8A-6
8A.2.5.2 Class 1E Battery Capacity 8A-6
8A.2.5.3 Compressed Air 8A-7
8A.2.5.4 Effects of Loss of Ventilation 8A-7
8A.2.5.5 Containment Isolation 8A-8
8A.2.6 QUALITY ASSURANCE CONSIDERATIONS 8A-10
8A.2.7 TECHNICAL SPECIFICATIONS CONSIDERATIONS 8A-10
8A.2.8 VERIFICATION OF NUMARC 87-00 BASELINE ASSUMPTIONS 8A-10
8A.2.9 REFERENCES 8A-11

Appendix 8A

STATION BLACKOUT

LIST OF TABLES

Section	Title	Page
8A-1	Station Blackout Coping Determination	8A-13
8A-2	Validation of NUMARC 87-00 Assumptions	8A-16

Appendix 8A

STATION BLACKOUT

8A.1 INTRODUCTION

The complete loss of ac electrical power to the essential and nonessential switchgear buses is referred to as "station blackout" (SBO). It does not include the loss of ac power as supplied by the station batteries through inverter or the loss of ac power that is available from an "alternate ac" source as defined below. Station blackout also does not assume a concurrent single failure or a design basis accident (10 CFR 50.2 and Reference 8A-1, Appendix A).

NUREG-0933 states that SBO was resolved on a generic basis by publication of the station blackout rule (10 CFR 50.63) and Regulatory Guide 1.155. The regulatory guide provides guidance acceptable to the Staff for use of NUMARC 87-00 to satisfy the requirements of 50.63 (Reference 8A-1, Appendix K). The regulatory guide shows that NUMARC 87-00 provides guidance for meeting all aspects of the rule with the exception of the quality assurance requirements to be applied to SBO response equipment that is not safety-related and the potential need for changes to the Technical Specifications (Reference 8A-1, Appendix I, Q/A 1).

Contained within NUMARC 87-00 are five initiatives approved by the NUMARC Board of Directors to address the more important contributors to SBO risk. The initiatives are

a. Initiative 1A - Risk Reduction

   Each utility will review their site(s) against the criteria specified in the revised draft SBO Regulatory Guide, and if the site(s) fall into the category of an 8-hr or 16-hr site after utilizing all power sources available, the utility will take actions to reduce the site(s) contribution to the overall risk of station blackout. Nonhardware changes will be made within 1 year. Hardware changes will be made within a reasonable time thereafter.

b. Initiative 2 - Procedures

   Each utility will implement procedures at each of its site(s) for

   1. Coping with a station blackout,

   2. Restoration of ac power following a station blackout event, and

3. Preparing the plant for severe weather conditions (e.g., hurricanes) to reduce the likelihood and consequences of a loss of offsite power and to reduce the overall risk of a station blackout event.

c. Initiative 3 - Cold Starts

Each utility will, if applicable, reduce or eliminate cold fast-starts of emergency diesel generators for testing through changes to technical specifications or other appropriate means.

d. Initiative 4 - Alternating Current Power Availability

Each utility will monitor emergency ac power unavailability, utilizing data provided to INPO on a regular basis.

e. Initiative 5A - Coping Assessment/Emergency Diesel Generator (EDG) Performance

Each utility will assess the ability of its plant(s) to cope with a station blackout. Plants utilizing alternate ac power for station blackout response which can be shown by test to be available to power the shutdown buses within 10 minutes of the onset of station blackout do not need to perform any coping assessment. Remaining alternate ac plants will assess their ability to cope for 1 hr. Plants not utilizing an alternate ac source will assess their ability to cope for 4 hr. Factors identified which prevent demonstrating the capability to cope for the appropriate duration will be addressed through hardware and/or procedural changes so that successful demonstration is possible.

As part of the coping assessment, utilities are required to choose an EDG target reliability (0.95 or 0.975) and are required to maintain that chosen reliability. Accordingly, each utility will employ the following exceedance trigger values (on a plant unit basis) as the mechanism for monitoring EDG target reliability and to support closure of Generic Issues B-56.

Selected EDG Target Reliability	Failures in 20 Demands	Failures in 50 Demands	Failures in 100 Demands
0.95	3	5	8
0.975	3	4	5

Additionally, each utility, in response to an individual EDG experiencing four or more failures in the last 25 demands, will demonstrate restored EDG performance by conducting seven consecutive failure free start and load-run tests. This form of accelerated testing shall be conducted at a frequency of no

less than 24 hr and of no more than 7 days between each demand. Each utility will, if applicable, address this reduction in accelerated testing through changes to Technical Specifications or other appropriate means.

Columbia Generating Station implementation of these initiatives is discussed in Section 8A.2.

The SBO rule requires that a SBO coping period be established through appropriate coping analysis. It is required that during the established SBO coping period core cooling and containment integrity are maintained [10 CFR 50.63(a)(2)].

The discussion in Section 8A.2 shows Columbia Generating Station to be in compliance to the SBO rule by comparison with the requirements of NUMARC 87-00. Additional discussions relative to station blackout quality assurance and Technical Specifications are provided in Sections 8A.2.6 and 8A.2.7.

Two approaches are available to licensees for compliance to the SBO rule. They are use of

Alternate ac. This is a power source that is (1) connectable to but not normally connected to the offsite or onsite emergency ac power systems, (2) has minimum potential for common-mode failure with offsite power or the onsite emergency ac power sources, (3) is available in a timely manner after the onset of SBO, and (4) has sufficient capacity and reliability for operation of all systems required for coping with SBO and for the time required to bring and maintain the plant in safe shutdown (non-design-basis accident) (10 CFR 50.2 and Reference 8A-1, Appendix A).

Columbia Generating Station, along with some other BWRs, proposed the use of the high-pressure core spray (HPCS) diesel generator as alternate ac (Reference 8A-2) as this third diesel generator is in excess of the number required to meet the minimum redundancy requirements (i.e., single failure for safe shutdown) (Reference 8A-1, Appendix I, Q/A 105). While HPCS could provide decay heat removal during an SBO, it could not provide power to an emergency bus. Therefore, it was proposed that coping analyses would also be performed to address instrumentation, battery capacities, air supply, and loss of heating, ventilating, and air conditioning (HVAC). This approach has been found to be acceptable to the NRC although they disagreed that the HPCS diesel generator should be classified as alternate ac (Reference 8A-3).

ac-Independent. For this approach the plant relies on available process steam, dc power, and compressed air to operate equipment necessary to achieve safe shutdown conditions until offsite or emergency ac power is restored (Reference 8A-1).

The RCIC system is considered the backup to HPCS during SBO. Columbia Generating Station's coping analysis includes battery voltage profiles for both the 125 V dc and 250 V dc batteries that provide power to RCIC system equipment. These

battery profiles assume that RCIC is providing sole mitigation for the SBO event. Although the RCIC system is not credited for SBO event mitigation, it is the preferred SBO mitigation system and will be maintained available to respond to an SBO event. (Reference 8A-16).

RCIC uses reactor steam and dc power to operate during SBO. The system's keepfill pump, RCIC-P-3, is ac powered and assumed unavailable. Upon loss of keepfill, the system experiences a gradual decay in pressure while in the standby mode. The RCIC system remains available for use until the low pressure alarm of RCIC-PIS-34, which alerts the operator to the loss of margin to void formation in the discharge header.

8A.2 EVALUATION TO NUMARC 87-00

Chapters 3 through 7 of NUMARC 87-00 contain guidance which, if implemented, would serve to satisfy the five NUMARC SBO initiatives and obtain compliance with the SBO rule, with the exception of quality assurance and Technical Specifications considerations. The following sections address the content of these chapters.

8A.2.1 REQUIRED COPING DURATION

Using the data listed in Table 8A-1 and the methodology provided in Chapter 3 of NUMARC 87-00, the coping period for Columbia Generating Station was determined to be 4 hr.

8A.2.2 RESPONSE PROCEDURES

NUMARC 87-00 required procedure changes to deal with

a. SBO response. Changes in this category included; requiring priority efforts to restore ac power with site specific instructions on how this is to be accomplished, providing for core cooling and containment isolation, dealing with the loss of HVAC (e.g., the opening of control room cabinet doors), and the need to strip battery loads if necessary to conserve dc power.

b. Alternating current power restoration. These changes provided guidance to operations and the load dispatcher concerning the course of actions to be taken to restore ac power.

c. Severe weather guidelines. These changes provided guidance for operators to determine the proper course of action due to the onset of severe weather; in particular hurricanes.

The Columbia Generating Station SBO emergency response procedure provides guidance for responding to an SBO including specific instructions for (1) providing for core cooling if HPCS and/or reactor core isolation cooling (RCIC) are available, (2) dealing with the loss of

HVAC (e.g., the opening of control room cabinet doors and actions to prevent RCIC isolation on high temperature), (3) notifying BPA to give priority to restoration of power to Columbia Generating Station, and (4) checking closed containment isolation valves that might have been open prior to the onset of the SBO. For Columbia Generating Station response to the SBO rule, only the B1-1 and B1-2 batteries are required. As there is no need to provide for load stripping of these batteries, this is not provided for in the SBO procedure (Reference 8A-1, Appendix I, Q/A 77).

In addition to the instructions in the SBO response procedure for giving priority to restoration of power to Columbia Generating Station, the loss of all offsite power procedure was revised to provide this guidance and the BPA System Restoration Plan was revised to identify the need for prompt restoration of offsite power to Columbia Generating Station and the actions to be taken to achieve this.

As Columbia Generating Station was not evaluated for a hurricane during initial plant licensing and as no credit was taken for hurricane procedures in the coping analysis, no procedure changes were required to deal with the threat of hurricanes (Reference 8A-1, Appendix I, Q/As 12 and 52). In Reference 8A-4 Energy Northwest proposed to the NRC that with the Columbia Generating Station site having a very low risk for tornadoes, no special site inspections for potential missiles were necessary. Also, it was explained that restoration of important plant systems and components did not require special procedures with the exception of tornado damage to the ultimate heat sink spray ponds which was covered by existing procedures.

8A.2.3 COLD STARTS

This requires that each plant ensure that emergency diesel generator tests are performed in a prewarmed and prelubed condition except during the Technical Specifications demand test required approximately once each scheduled refueling outage unless the emergency diesel generator is normally prewarmed and prelubed.

No action was required for this item as the Columbia Generating Station diesels have prewarm (see Section 9.5.5.2) and prelube (see Section 9.5.7.2) systems that are normally in operation.

8A.2.4 EMERGENCY ALTERNATING CURRENT POWER AVAILABILITY

This item implements NUMARC SBO Initiative 4 which requires monitoring of plant emergency generator unavailability. Appendix D of the NUMARC document provides a suggested diesel generator reliability program.

In Reference 8A-5 Energy Northwest stated that procedures had been revised to implement Appendix D of NUMARC 87-00 and the five elements listed in Regulatory Guide 1.155, Position 2.

8A.2.5 COPING WITH A STATION BLACKOUT EVENT

Chapter 7 of NUMARC 87-00 provides a simplified assessment procedure for establishing the ability to cope with an SBO. There are five steps to the procedure, addressing the following topics:

a. Condensate inventory for decay heat removal,
b. Assessing the Class 1E battery capacity,
c. Compressed air,
d. Effects of loss of ventilation, and
e. Containment isolation.

8A.2.5.1 Condensate Inventory

The required condensate is to be determined from

B = A*(X gal/MWt) + C + RCS leakage

Where:

A = licensed output - MWt,

X = 22.12 for a 4-hr coping period, and

C = amount of water to support cooldown if cooldown is required to limit pump seal leakage or to maintain decay heat removal - gallons.

The reactor coolant system (RCS) leakage term is the coping period inventory loss due to (1) an assumed pump seal failure leakage term of 25 gpm/pump (later changed by the NRC to 18 gpm/pump for BWRs, Reference 8A-1, Appendix J, Q/A 2.1), and (2) the maximum allowable Technical Specifications RCS leakage. For Columbia Generating Station, A is 3544 MWt and C is 31,568 gal resulting in a required inventory of 109,962 gal.

Reference 8A-6 discusses the administrative controls and plant feature that proved assurance that this quantity of water will be available in the condensate storage tanks (CST) (the Technical Specifications do not control CST quantity while in Mode 1).

8A.2.5.2 Class 1E Battery Capacity

The B1-1 and B1-2 125-V batteries have adequate capacity for a 4-hr SBO coping period without load shedding (Reference 8A-4 through 8A-7). The battery load calculations assume an electrolyte temperature of 74°F. This was found to be acceptable to the NRC by Reference 8A-8 provided that administrative controls are in place to ensure that this value

would be the lowest temperature anticipated during normal operating conditions as required by Reference 8A-1, Section 7.2.2. The supplemental SER (SSER) (Reference 8A-8) did require the revisions to the calculations to account for changes to inverter efficiency and load currents. The calculations have been revised.

The B2-1 battery is not required for compliance to the SBO rule (Reference 8A-5).

8A.2.5.3 Compressed Air

Compressed air is addressed to ensure that air operated valves required for decay heat removal have sufficient reserve air or can be manually operated under station blackout conditions for the established coping duration.

In Reference 8A-4 Energy Northwest stated that (1) no air-operated valves are relied on to cope with an SBO of 4 hr, and (2) the safety/relief valves (SRVs), which together with the HPCS provide for decay heat transfer to the suppression pool, have an adequate nitrogen supply for 4 hr of SRV operation.

8A.2.5.4 Effects of Loss of Ventilation

To address the impact of a loss of ventilation during the SBO, the 4-hr (final) steady-state temperatures are determined for dominant areas of concern (DAC). Dominant areas of concern are those that (1) contain equipment that is needed to function early in an SBO (within 1 hr) to remove decay heat, (2) have significant heat generation sources after ac power is lost, relative to the free air volume of the room, and (3) unless the operator takes action, the capability to remove heat is lost during an SBO (Reference 8A-1, Appendix I, Q/A 4).

With the SBO temperatures determined, reasonable assurance of operability (RAO) of SBO coping equipment located in the areas is then established per the requirements of NUMARC 87-00, Appendix F.

For the Columbia Generating Station SBO response, the dominant areas of concern are (1) the control room, and (2) primary containment.

The SBO temperature for switchgear room 2 was determined as it contains breakers required for the restoration of ac power; its major heat source is inverter IN-5 which is not required for compliance to the SBO rule. A primary containment thermal hydraulic analysis was performed to determine the SBO drywell and wetwell temperatures.

The steam tunnel was also analyzed for SBO although it was found to not contain SBO coping equipment (References 8A-5, 8A-9, and 8A-10). The following rooms contain SBO coping equipment but maintain ventilation during a SBO and thus do not need to be evaluated as dominant areas of concern (Reference 8A-1, Section 7.1.2): (1) HPCS pump room, (2) HPCS

diesel/electrical equipment room, and (3) service water pump house A. The HVAC calculations for these rooms were reviewed to confirm RAO of SBO equipment located in these areas although this is not a requirement of the SBO rule (Reference 8A-1, Appendix I, Q/A 137).

The SBO final temperatures for the rooms listed below were derived from calculations based on selected initial temperatures as appropriate:

Room	Final (°F)	Initial (°F)	Doors
SW pump house A	113	N/A	Closed
HPCS diesel/equipment room	104	N/A	Closed
HPCS pump room	123	N/A	Closed
RPS-1 room (IN-3A and 3B)	127	104	Closed
RPS-2 room (IN-2A and 2B)	119	104	Closed
Switchgear room 2	113	104	Closed
Control room	119.7	78	Closed
Steam tunnel	193	140	Closed
Drywell	229	135	N/A
Wetwell air	179	150	N/A
Wetwell water	209	90	N/A

In Reference 8A-5 the use of the initial temperatures of 78°F for the control room was justified based on the addition of administrative controls to ensure that the room temperature would not be exceeded or corrective action would be taken to restore them. This was accepted by the NRC in Reference 8A-8.

The HPCS diesel/equipment and HPCS pump rooms and SW pump house A are not considered as dominant areas of concern as ventilation is maintained during an SBO. For the remaining areas RAO has been established for the SBO coping equipment located in these rooms. For those areas with a temperature of less than or equal to 120°F, RAO can be assumed without further analysis (Reference 8A-1, Appendix J, Q/A 2.2). The SBO coping equipment located in other areas was previously designated as safety-related for non-SBO considerations for which the environmental qualification requirements of 50.49 establish RAO.

8A.2.5.5 Containment Isolation

Containment isolation valves must be reviewed to ensure that appropriate containment integrity can be provided during an SBO should core damage become imminent (Reference 8A-1, Appendix I, Q/A 102).

Valves that do not need to be considered for SBO closure considerations are those that meet one of the following criteria:

a. Valves normally locked closed during operation,

b. Valves that fail closed on loss of ac power or air,

c. Valve is a check valve,

d. Valves in nonradioactive closed loop systems not expected to be breached in a SBO (with the exception of lines that communicate directly with the containment atmosphere), or

e. All valves less than 3 in. nominal diameter.

In addition, as the objective is to protect the penetration and additional single failures do not need to be applied for SBO coping, valves that have an in-series valve that satisfies one of the above criteria can also be excluded (Reference 8A-1, Appendix I, Q/A 101).

In References 8A-5 and 8A-9 Energy Northwest proposed to add the following exclusion criteria:

a. Valves for which interlocks exist that prevent opening of one or both in-series valves during power operation;

b. Valves that are associated with containment penetrations that use single isolation valves and satisfy General Design Criterion 56 by taking credit for the closed loop system outside containment as a second isolation barrier. This is often the case for those lines for which the suppression pool serves as a loop seal; and

c. Valves that are procedurally controlled to be closed during normal power operation. It is acceptable for such valves to be opened to support surveillance testing. However, exclusion of valves associated with more frequent operation, e.g., suppression pool cooling, is not appropriate.

These exclusion criteria were found acceptable by the Staff in Reference 8A-8.

The result of this evaluation is provided in Table 6.2-16. The SBO emergency response procedure has been revised to provide guidance for closure of those valves that were not excluded by this evaluation. For these valves it has been confirmed that (1) position indication is provided (by means other than observation of the stem position), (2) local manual closure capability exists, and (3) access would be available during an SBO. This confirmation was also made for those valves that were excluded by the fact that they are procedurally controlled to be closed during normal operation.

8A.2.6 QUALITY ASSURANCE CONSIDERATIONS

Regulatory Guide 1.155, Section 3.5, requires that the quality assurance requirements of Appendixes A and B of the guide be applied to that non-safety-related equipment used to meet the requirements of the SBO rule that are not already covered by existing quality assurance requirements of 10 CFR 50 Appendixes B or R.

In Reference 8A-5 Energy Northwest stated that SBO instrumentation coping equipment that is identified as QC II+ and is also required by Regulatory Guide 1.97 conforms to the quality assurance requirements of Regulatory Guide 1.97 for Category 2 equipment. As such, any additional quality assurance requirements of Regulatory Guide 1.155 are not applied to the equipment. Also, the reference explains that with the exception of the CST, SBO quality assurance is not applied to passive equipment (e.g., piping and structural supports). Other SBO coping equipment will conform to the requirements of Appendix R or Regulatory Guide 1.155.

These positions were accepted by the NRC in the SSER (Reference 8A-8); however Reference 8A-10 was submitted to the NRC to correct the words in the SSER relative to the quality assurance provided for passive equipment.

Reference 8A-5 also explained that SBO coping equipment has been identified as that equipment required to cope with an SBO and that failure of other equipment during an SBO was not postulated simply because it had not been assigned safety-related or SBO quality assurance requirements.

In Reference 8A-7 Energy Northwest stated that with regard to SBO recovery (not coping) equipment, SBO quality assurance requirements would only apply to SBO recovery equipment that is not in service during normal operation

8A.2.7 TECHNICAL SPECIFICATIONS CONSIDERATIONS

The basis for the Columbia Generating Station response to the SBO rule is use of HPCS which is safety related and already adequately covered in the Technical Specifications. No SBO Technical Specifications changes are required for Columbia Generating Station. Use of HPCS for SBO coping does not place any additional design or operating considerations on the HPCS system.

8A.2.8 VERIFICATION OF NUMARC 87-00 BASELINE ASSUMPTIONS

Section 1.3 of NUMARC 87-00 states that utilities are expected to ensure that the baseline assumptions of the document are applicable to their plants. Utilities are, however, not expected to perform rigorous analyses or evaluations in verifying these assumptions (Reference 8A-1, Appendix I, Q.A 3). The analyses are to be available for NRC review.

Table 8A-2 documents the evaluation of the baseline assumptions as applied to Columbia Generating Station. The table shows that where the assumptions were found to be invalid, alternative methods confirmed Columbia Generating Station compliance to the SBO rule. In all cases where a baseline assumption was found to be invalid, it was not because of a Columbia Generating Station unique feature, but rather because the assumption was not applicable to a large class of plants.

8A.2.9 REFERENCES

8A-1 NUMARC 87-00, Revision 1, "Guidelines and Technical Bases for NUMARC Initiatives Addressing Station Blackout at Light Water Reactors," Nuclear Management and Resources Council, Inc., dated August 1991.

8A-2 Meeting Summary by P. S. Tam, "BWR Alternate AC Approach to Satisfy Station Blackout Rule (TAC Nos. 68529, 68549, 68550, 68584, 68626, 40577)," dated March 2, 1989.

8A-3 Letter, GI2-92-012, P. L. Eng to G. C. Sorensen, "Safety Evaluation of the Washington Public Power Supply System Nuclear Project Number 2 Station Blackout Analysis (TAC No. M68626)," dated December 30, 1991.

8A-4 Letter, GO2-89-062, G. C. Sorensen to NRC, "Response to Station Blackout Rule Using HPCS Division III as Alternate AC Power," dated April 17, 1989.

8A-5 Letter, GO2-92-057, G. C. Sorensen to NRC, "Safety Evaluation of the Washington Public Power Supply System Nuclear Project Number 2 Station Blackout Analysis," dated March 6, 1992.

8A-6 Letter, GO2-91-091, G. C. Sorensen to NRC, "Additional Information Regarding SBO (TAC Nos. 68626)," dated May 7, 1992.

8A-7 Letter, GO2-90-064, G. C. Sorensen to NRC, "Station Blackout Implementation, Additional Information (TAC 68626)," dated March 30, 1990.

8A-8 Letter, GI2-92-180, R. R. Assa to G. C. Sorensen, Supplemental Safety Evaluation (SSE) of the Washington Public Power Supply System Nuclear Project No. 2 (WNP-2) Station Blackout Analysis (TAC M68626)," dated June 26, 1992.

8A-9 Letter, GO2-92-121, G. C. Sorensen to NRC, "Safety Evaluation of the Washington Public Power Supply System Nuclear Project Number 2 Station Blackout Analysis (TAC No. M68626)," dated May 14, 1992.

8A-10 Letter, GO2-92-183, G. C. Sorensen to NRC, "Station Blackout Supplemental SER and Implementation Schedule, 10 CFR 50.63(c)(4), TAC NO. M68626," dated July 31, 1992.

8A-11 Letter, GO2-94-002, J. V. Parrish to NRC, "Updating Information Regarding Station Blackout Resolution (TAC No. N68626)," dated January 6, 1994.

8A-12 "Storage Batteries, A General Treatise on the Physics and Chemistry of Secondary Batteries and their Engineering Applications," fourth edition by G. W. Vinal, and J. Wiley & Sons.

8A-13 Letter, GO2-88-025, D. W. Mazur to NRC, "NRC Inspection Report 87-19," dated January 29, 1988.

8A-14 Letter, GO2-92-099, G. C. Sorensen to NRC, "Safety Evaluation of the Washington Public Power Supply System Nuclear Project Number 2 Station Blackout Analysis (TAC No. M68626)," dated April 15, 1992.

8A-15 Calculation ME-02-89-21.

8A-16 Letter, GO2-07-139, D.W. Coleman to NRC, "Clarification on the Role of Reactor Core Isolation Cooling During a Station Blackout for Columbia Generating Station," dated September 13, 2007.

Table 8A-1

Station Blackout Coping Determination

Station Blackout Consideration	NUMARC 87-00, Rev. 1 Reference
1. Determine the Offsite Power Design Characteristic Group	
A. Site susceptibility to grid related loss of offsite power (LOOP) events	App I, Q/A 10
with < one event/20 yrs; then, not a P3 site	
B. Frequency of a LOOP due to extremely severe weather	Table 3-2
with an annual expectation of 0.0001; then, ESW Group 1	
C. Frequency of a LOOP due to severe weather	p 3-6
$f = (1.3x10^{-4})*h_1 + b*h_2 + (1.2x10^{-2})*h_3 + c*h_4$	
with	
h_1 = annual snowfall expectation, 14 in. (FSAR Table 2.3-1)	App I, Q/A 14 Reference 8A-5
h_2 = annual expectation for a tornado of severity < f2, $2x10^{-7}$	Table 3-3
h_3 = annual expectation for wind of 75 to 124 mph, 0.03	Table 3-3
h_4 = annual expectation of a storm w/salt spray, 0.0	Table 3-3

Table 8A-1

Station Blackout Coping Determination (Continued)

	Station Blackout Consideration	NUMARC 87-00, Rev. 1 Reference
	C. Frequency of a LOOP due to severe weather (continued)	
		p 3-6
	b = 12.5 for sites w/multiple rights away	
		p 3-6
	c = 0.0 for sites w/o salt spray vulnerability	
	then	
		Table 3-4
	$f = 2.2x10^{-3}$; therefore SW Group 1	
	D. Independence of offsite power system	
	with two switch yards and with automatic transfers provided upon loss of the main generator and the preferred source	p 3-10
	then, I Group 1/2	
	E. Determine offsite power design group	Table 3-5a
	with ESW 1, SW 1, and I 1/2	
	then, Group P1	
2.	Classify Emergency Alternating Current Power Supply System Configuration	Table 3-7
	with	
	EDGs normally available = 2 EDGs required for safe shutdown = 1;	
	then, EAC Group C	

Table 8A-1

Station Blackout Coping Determination (Continued)

	Station Blackout Consideration	NUMARC 87-00, Rev. 1 Reference
3.	Determine Allowed EDG Target Reliability with 0 failures last 20 demands being >90% 1 failure in last 50 demands being >94% 1 failure in last 100 demands being >95% and with EAC Group C, then, a target reliability of 95%	Section 3.2.4
4.	Determining Coping Duration Requirement with Offsite Power Group P1 EAC Group C EDG target reliability of 95% then, the required coping duration is 4 hr	Table 3-8

Table 8A-2

Validation of NUMARC 87-00 Assumptions

NUMARC	Assumption	Comment
NUMARC 87-00, Rev. 1, Appendix J.9 Considerations		
2.4.1(1)	Confirm dc power for EDG field flashing and breaker closure.	These considerations are included in the battery capacity calculations (Reference 8A-7).
2.5.2	BWRs should consider RRC pump seal leakage.	Seal leakage is included in the required inventory calculation (see Section 8A.2.5.1).
2.7.1	LOCA and HELB temperatures may not be conservative for SBO.	A plant specific SBO primary containment heatup calculation has been performed for Columbia Generating Station, and the SBO temperatures are bounded by the LOCA analysis temperatures. The DAC area outside containment is not susceptible to HELB conditions. (see Section 8A.2.5.4).
2.7.1(2)(a)	Confirm control room temperatures do not exceed 120°F.	This assumption was confirmed for Columbia Generating Station by a plant-specific control room heatup calculation (Reference 8A-7).
2.7.1(2)(a)1 2.7.1(2)(a)2	Initial and average wall temperatures assumptions should be verified by plant data.	The use of 104°F for RPS rooms and switchgear room 2 is valid as these rooms are controlled to below this temperature per the Licensee Controlled Specifications.

Table 8A-2

Validation of NUMARC 87-00 Assumptions (Continued)

NUMARC	Assumption	Comment
		The heatup calculations for the control room used an alternate methodology for which the temperature of adjacent rooms was properly accounted for. The temperatures of the rooms adjacent to the control room were conservatively assumed to be 104°F with the exception of the communication room which may have SBO heat loads and was assumed to be at 120°F. The control room model does not use the basic NUMARC 87-00 assumption that wall temperature remains basically constant during the SBO. Rather it models the wall as several nodes (typically 10) for which time dependent heat conduction and convection are accounted for.
		The primary containment model used the maximum temperature allowed by the Technical Specifications for the drywell and suppression pool as the initial temperatures for the appropriate portions of the containment shell and internal structures. These temperatures are higher than those that would be expected for the adjacent areas outside primary containment (i.e., within the Reactor Building).

Table 8A-2

Validation of NUMARC 87-00 Assumptions (Continued)

NUMARC	Assumption	Comment
2.7.1(2)(a)(3) 2.7.1(2)(a)(4)	Drop ceilings and walls that are not poured concrete cannot be modeled by NUMARC 87-00 methodology. If either are to be modeled, an alternate methodology must be used and this should be identified to the NRC.	The control room has a drop ceiling and walls that have facia board paneling. The drop ceiling was modeled by a method identified to the NRC in Reference 8A-7. The control room model has two volumes; the main portion of the room and the volume above the drop ceiling. Walls with facia board panel were not credited as heat sinks.
2.7.1(2)(a)(5)	In order to take credit for opening doors, the adjacent room must be large relative to the DAC and at a lower temperature.	The opening of doors is not required for SBO Rule compliance.
2.7.1.(2)(b)	Loss of heating in the battery room is assumed not to affect battery capacity. Provided battery capacity calculations used the lowest electrolyte temperature anticipated under normal operating conditions, further consideration of loss of battery capacity is not required.	The battery rooms have no walls that are exterior walls of the building and some of the adjacent rooms will have SBO heat loads. As such, there will not be significant cooling of the rooms during the coping period. Also, as the I^2R heat generation within the batteries will be greater than the heat loss due to the endothermic discharge reaction (Reference 8A-12), it is likely that the electrolyte temperature will increase even with a slight decrease in room temperature.

Table 8A-2

Validation of NUMARC 87-00 Assumptions (Continued)

NUMARC	Assumption	Comment
Other Considerations		
2.3.1	Specific consideration was not given in NUMARC 87-00 for a grid related LOOP due to volcanic activity.	The eruptions of Mt. St. Helens in 1980 did not result in significant disturbance to the BPA system. Also, the probability of volcanic activity that could significantly impact the BPA system is low relative to severe weather events that could do the same. Columbia Generating Station has made procedure and design provisions to ensure continuous EDG operations during volcanic activity (see Section 9.2.5.3 and Reference 8A-13).
2.7.1.(2)(a)	RAO only needs to be established for areas that lose normal ventilation.	RAO was confirmed for those areas that contain SBO coping equipment for which ventilation is maintained (Section 8A.2.5.4).
2.7.1.(2)(a)	For a temperature ≤ 120°F, it is likely no specific actions to ensure RAO are required.	Analysis has confirmed that all equipment important to station blackout is capable of functioning at temperatures ≤ 120°F (≤ 129°F for the RPS-1 room) with no specific action required to ensure RAO.
2.7.1.(2)(a)	The DACs for BWRs are the HPCI/HPCS and RCIC rooms and the main steam tunnel.	For Columbia Generating Station, the control room and primary containment are considered as DACs.

Table 8A-2

Validation of NUMARC 87-00 Assumptions (Continued)

NUMARC	Assumption	Comment
Appendix I, Q/A 95	Plants that relied on GE HELB analysis or a plant specific analysis which bounds the GE analysis, need not address the drywell temperature.	This assumption was validated for Columbia Generating Station using a plant-specific primary containment heatup analysis that modeled the drywell, wetwell air space, and suppression pool.

Chapter 9

AUXILIARY SYSTEMS

TABLE OF CONTENTS

Section Page

9.1 FUEL STORAGE AND HANDLING 9.1-1
9.1.1 NEW FUEL STORAGE 9.1-1
9.1.1.1 Design Bases 9.1-1
9.1.1.1.1 Safety Design Bases 9.1-1
9.1.1.1.1.1 Safety Design Bases - Structural 9.1-1
9.1.1.1.1.2 Safety Design Bases - Nuclear 9.1-1
9.1.1.1.2 Power Generation Design Bases 9.1-2
9.1.1.2 Facilities Description 9.1-2
9.1.1.3 Safety Evaluation 9.1-3
9.1.1.3.1 Criticality Control 9.1-3
9.1.1.3.2 New Fuel Rack Structural Design 9.1-4
9.1.1.3.3 New Fuel Handling 9.1-5
9.1.1.3.4 Other New Fuel Storage Design Factors 9.1-5
9.1.2 SPENT FUEL STORAGE 9.1-6
9.1.2.1 Design Bases 9.1-6
9.1.2.1.1 Safety Design Bases 9.1-6
9.1.2.1.1.1 Safety Design Bases - Structural 9.1-6
9.1.2.1.1.2 Safety Design Bases - Nuclear 9.1-6
9.1.2.1.2 Power Generation Design Bases 9.1-7
9.1.2.2 Facilities Description 9.1-7
9.1.2.2.1 Spent Fuel Storage Racks 9.1-7
9.1.2.2.2 Spent Fuel Storage Pool 9.1-8
9.1.2.3 Safety Evaluation 9.1-9
9.1.2.3.1 Criticality Control 9.1-9
9.1.2.3.1.1 8 x 8 Fuel 9.1-9
9.1.2.3.1.2 9 x 9 and 10 x 10 Fuel 9.1-11
9.1.2.3.2 Spent Fuel Storage Rack Structural Design 9.1-15
9.1.2.3.3 Spent Fuel and Cask Handling 9.1-18
9.1.2.3.4 Spent Fuel Rack Design Features 9.1-19
9.1.2.3.5 Spent Fuel Storage Facilities Design 9.1-21
9.1.2.3.6 Radiological Considerations 9.1-22
9.1.2.3.6.1 Normal Operation 9.1-22
9.1.2.3.6.2 Radiological Consequences of Accidents 9.1-22
9.1.2.3.7 Conclusions 9.1-23
9.1.3 SPENT FUEL POOL COOLING AND CLEANUP SYSTEM 9.1-23
9.1.3.1 Design Bases 9.1-23

Chapter 9

AUXILIARY SYSTEMS

TABLE OF CONTENTS (Continued)

Section — Page

9.1.3.2 System Description 9.1-24
9.1.3.2.1 System Operation 9.1-25
9.1.3.2.1.1 FPC System Cooling Function 9.1-25
9.1.3.2.1.2 FPC System Clean-Up Functions 9.1-27
9.1.3.2.2 Residual Heat Removal/Fuel Pool Cooling Cleanup Assist Mode Operation 9.1-29
9.1.3.2.3 Fuel Pool Cooling System Operation Following a Seismic Event or Major Plant Disturbance 9.1-30
9.1.3.3 Safety Evaluation 9.1-30
9.1.3.4 Testing and Inspection Requirements 9.1-32
9.1.4 FUEL HANDLING SYSTEM 9.1-32
9.1.4.1 Design Bases 9.1-32
9.1.4.2 System Description 9.1-34
9.1.4.2.1 Spent Fuel Cask 9.1-34
9.1.4.2.2 Reactor Building Crane 9.1-34
9.1.4.2.2.1 Description 9.1-34
9.1.4.2.2.2 Safety Features 9.1-36
9.1.4.2.3 Fuel Servicing Equipment 9.1-37
9.1.4.2.3.1 Fuel Preparation Machine 9.1-37
9.1.4.2.3.2 New Fuel Inspection Stand 9.1-38
9.1.4.2.3.3 Channel Bolt Wrench 9.1-38
9.1.4.2.3.4 Channel Handling Tool 9.1-38
9.1.4.2.3.5 Fuel Pool Sipper 9.1-38
9.1.4.2.3.6 Fuel Inspection Fixture 9.1-39
9.1.4.2.3.7 Channel Gauging Fixture 9.1-39
9.1.4.2.3.8 General Purpose Grapple 9.1-39
9.1.4.2.4 Servicing Aids 9.1-39
9.1.4.2.5 Reactor Vessel Servicing Equipment 9.1-40
9.1.4.2.5.1 Reactor Vessel Service Tools 9.1-40
9.1.4.2.5.2 Steam Line Plug 9.1-40
9.1.4.2.5.3 Shroud Head Bolt Wrench 9.1-40
9.1.4.2.5.4 Head Holding Pedestal 9.1-40
9.1.4.2.5.5 Head Nut and Washer Racks 9.1-41
9.1.4.2.5.6 Head Stud Racks 9.1-41
9.1.4.2.5.7 Dryer and Separator Slings 9.1-41
9.1.4.2.5.8 Head Strongback 9.1-41

Chapter 9

AUXILIARY SYSTEMS

TABLE OF CONTENTS (Continued)

Section — Page

9.1.4.2.5.9 Steam Line Plug Installation Tool 9.1-42
9.1.4.2.5.10 Auxiliary Work Platform 9.1-42
9.1.4.2.5.11 Cavity In-Vessel Service Platform (CISP) 9.1-42
9.1.4.2.5.12 Head Stud Tensioner Carousel/Strongback 9.1-43
9.1.4.2.6 In-Vessel Servicing Equipment 9.1-43
9.1.4.2.7 Refueling Equipment 9.1-44
9.1.4.2.7.1 Refueling Platform 9.1-44
9.1.4.2.8 Storage Equipment 9.1-45
9.1.4.2.9 Under Reactor Vessel Servicing Equipment 9.1-45
9.1.4.2.10 Description of Fuel Transfer 9.1-46
9.1.4.2.10.1 Arrival of Fuel on Site 9.1-46
9.1.4.2.10.2 Refueling Procedure 9.1-46
9.1.4.2.10.2.1 New Fuel Preparation. 9.1-48
9.1.4.2.10.2.1.1 Receipt and Inspection of New Fuel 9.1-48
9.1.4.2.10.2.1.2 Channeling New Fuel (Non Westinghouse Fuel) 9.1-49
9.1.4.2.10.2.1.3 Channeling New Fuel (Westinghouse Fuel Only) 9.1-49
9.1.4.2.10.2.1.4 Equipment Preparation 9.1-49
9.1.4.2.10.2.2 Reactor Shutdown 9.1-49
9.1.4.2.10.2.2.1 Drywell Head Removal 9.1-50
9.1.4.2.10.2.2.2 Reactor Well Servicing 9.1-50
9.1.4.2.10.2.3 Reactor Vessel Opening. 9.1-50
9.1.4.2.10.2.3.1 Vessel Head Removal 9.1-50
9.1.4.2.10.2.3.2 Dryer Removal 9.1-51
9.1.4.2.10.2.3.3 Separator Removal 9.1-51
9.1.4.2.10.2.3.4 Fuel Bundle Sampling 9.1-51
9.1.4.2.10.2.4 Refueling and Reactor Servicing 9.1-51
9.1.4.2.10.2.4.1 Refueling 9.1-51
9.1.4.2.10.2.5 Vessel Closure 9.1-52
9.1.4.2.10.3 Departure of Spent Fuel From the Reactor Building 9.1-53
9.1.4.3 Fuel Handling Safety Evaluation 9.1-53
9.1.4.4 Testing and Inspection Requirements 9.1-57
9.1.4.4.1 Testing and Inspection of Cranes 9.1-57
9.1.4.4.2 Inspection and Testing Requirements of Refueling and Servicing Equipment 9.1-58
9.1.4.4.2.1 Inspection 9.1-58
9.1.4.4.2.2 Testing 9.1-58

Chapter 9

AUXILIARY SYSTEMS

TABLE OF CONTENTS (Continued)

Section — Page

9.1.4.5 Instrumentation Requirements 9.1-59
9.1.4.5.1 Instrument Requirements - Cranes 9.1-59
9.1.4.5.2 Instrumentation Requirements - Refueling and Servicing Equipment 9.1-59
9.1.4.5.3 Fuel Support Grapple 9.1.60
9.1.4.5.4 Other 9.1-60
9.1.4.5.5 Radiation Monitoring 9.1-60
9.1.5 CONTROL OF HEAVY LOADS 9.1-60
9.1.5.1 Introduction/Licensing Background 9.1-60
9.1.5.2 Safety Basis 9.1-61
9.1.5.3 Scope of Overhead Heavy Load Handling System 9.1-61
9.1.5.4 Control of Heavy Loads Program 9.1-63
9.1.5.4.1 Columbia Generating Station Commitments in Response to NUREG-0612 Section 5.1.1, Phase I Guidelines 9.1-63
9.1.5.4.1.1 Safe Load Path 9.1-63
9.1.5.4.1.2 Procedures 9.1-63
9.1.5.4.1.3 Crane and Hoist Operators 9.1-63
9.1.5.4.1.4 Special Lifting Devices 9.1-63
9.1.5.4.1.5 Lifting Devices that are not Specially Designed 9.1-63
9.1.5.4.1.6 Crane Inspection, Testing and Maintenance 9.1-64
9.1.5.4.1.7 Hoist and Crane Design 9.1-64
9.1.5.4.1.7.1 Hoist Design 9.1-64
9.1.5.4.1.7.2 Crane Design 9.1-64
9.1.5.4.2 Reactor Pressure Vessel Head Lifting Procedures 9.1-64
9.1.5.4.3 Single-Failure-Proof Cranes for Spent Fuel Casks 9.1-64
9.1.5.4.4 Other Analyses 9.1-64
9.1.5.5 Safety Evaluation 9.1-64
9.1.6 REFERENCES 9.1-65

9.2 WATER SYSTEMS 9.2-1
9.2.1 PLANT SERVICE WATER SYSTEM 9.2-1
9.2.1.1 Design Bases 9.2-1
9.2.1.2 System Description 9.2-1
9.2.1.3 Safety Evaluation 9.2-2
9.2.1.4 Testing and Inspection Requirements 9.2-2
9.2.1.5 Instrumentation Requirements 9.2-3

Chapter 9

AUXILIARY SYSTEMS

TABLE OF CONTENTS (Continued)

Section — Page

9.2.2 REACTOR BUILDING CLOSED COOLING WATER SYSTEM 9.2-3
9.2.2.1 Design Bases 9.2-3
9.2.2.2 System Description 9.2-3
9.2.2.3 Safety Evaluation 9.2-5
9.2.2.4 Testing and Inspection Requirements 9.2-6
9.2.2.5 Instrumentation Requirements 9.2-6
9.2.3 PLANT MAKEUP WATER TREATMENT AND DEMINERALIZED WATER SYSTEMS 9.2-6
9.2.3.1 Design Basis 9.2-6
9.2.3.2 System Description 9.2-7
9.2.3.2.1 Plant Makeup Water Treatment System 9.2-7
9.2.3.2.2 Demineralized Water System 9.2-7
9.2.3.3 Safety Evaluation 9.2-8
9.2.3.4 Testing and Inspection Requirements 9.2-8
9.2.3.5 Instrumentation Requirements 9.2-8
9.2.4 POTABLE WATER AND SANITARY DRAIN SYSTEMS 9.2-9
9.2.4.1 Design Bases 9.2-9
9.2.4.2 System Description 9.2-9
9.2.4.2.1 Potable Water System 9.2-9
9.2.4.2.2 Sanitary Drain System 9.2-9
9.2.4.3 Safety Evaluation 9.2-10
9.2.4.4 Testing and Inspection Requirements 9.2-10
9.2.4.5 Instrumentation Requirements 9.2-10
9.2.5 ULTIMATE HEAT SINK 9.2-10
9.2.5.1 Design Bases 9.2-10
9.2.5.2 System Description 9.2-11
9.2.5.3 Safety Evaluation 9.2-12
9.2.5.4 Testing and Inspection Requirements 9.2-17
9.2.5.5 Instrumentation Requirements 9.2-17
9.2.6 CONDENSATE SUPPLY SYSTEM 9.2-17
9.2.6.1 Design Bases 9.2-17
9.2.6.2 System Description 9.2-18
9.2.6.3 Safety Evaluation 9.2-19
9.2.6.4 Testing and Inspection Requirements 9.2-19
9.2.6.5 Instrumentation Requirements 9.2-20

Chapter 9

AUXILIARY SYSTEMS

TABLE OF CONTENTS (Continued)

Section Page

9.2.7 STANDBY SERVICE WATER SYSTEM 9.2-20
9.2.7.1 Design Bases 9.2-20
9.2.7.2 System Description 9.2-21
9.2.7.3 Safety Evaluation 9.2-23
9.2.7.4 Testing and Inspection Requirements 9.2-25
9.2.7.5 Instrumentation Requirements 9.2-25
9.2.8 COMPRESSOR JACKET WATER SYSTEM 9.2-25
9.2.8.1 Design Bases 9.2-25
9.2.8.2 System Description 9.2-26
9.2.8.3 Safety Evaluation 9.2-27
9.2.8.4 Testing and Inspection Requirements 9.2-27
9.2.8.5 Instrumentation Requirements 9.2-27
9.2.9 REFERENCES 9.2-27

9.3 PROCESS AUXILIARIES 9.3-1
9.3.1 COMPRESSED AIR SYSTEMS 9.3-1
9.3.1.1 Design Bases 9.3-1
9.3.1.1.1 Control and Service Air Systems 9.3-1
9.3.1.1.2 Containment Instrument Air System 9.3-2
9.3.1.2 System Description 9.3-3
9.3.1.2.1 Control and Service Air System 9.3-3
9.3.1.2.2 Containment Instrument Air System 9.3-4
9.3.1.3 Safety Evaluation 9.3-6
9.3.1.3.1 Control and Service Air System 9.3-6
9.3.1.3.2 Containment Instrument Air System 9.3-6
9.3.1.4 Testing and Inspection Requirements 9.3-6
9.3.1.5 Instrumentation Requirements 9.3-7
9.3.1.5.1 Control and Service Air Systems 9.3-7
9.3.1.5.2 Containment Instrument Air System 9.3-7
9.3.2 PROCESS SAMPLING SYSTEM 9.3-8
9.3.2.1 Design Bases 9.3-8
9.3.2.2 System Description 9.3-9
9.3.2.2.1 Sample Locations 9.3-10
9.3.2.2.2 Liquid Sample Taps and Probes 9.3-10
9.3.2.2.3 Steam Samples 9.3-10
9.3.2.2.4 Sample Piping Design 9.3-10

Chapter 9

AUXILIARY SYSTEMS

TABLE OF CONTENTS (Continued)

Section Page

9.3.2.2.5 Fume Hood Design and Grab Samples 9.3-11
9.3.2.3 Safety Evaluation 9.3-11
9.3.2.4 Tests and Inspections 9.3-12
9.3.2.5 Instrument Requirements 9.3-12
9.3.3 EQUIPMENT AND FLOOR DRAINAGE SYSTEMS 9.3-13
9.3.3.1 Design Bases 9.3-13
9.3.3.2 System Description 9.3-13
9.3.3.2.1 Radioactive Equipment Drainage System 9.3-13
9.3.3.2.1.1 Reactor Building Drains 9.3-13
9.3.3.2.1.2 Turbine Building Drains 9.3-15
9.3.3.2.1.3 Radwaste Building Drains 9.3-15
9.3.3.2.2 Radioactive Floor Drainage Subsystem 9.3-16
9.3.3.2.2.1 Reactor Building Floor Drains 9.3-16
9.3.3.2.2.2 Turbine Building Floor Drains 9.3-18
9.3.3.2.2.3 Radwaste Building Floor Drains 9.3-19
9.3.3.2.3 Nonradioactive Water Drainage System 9.3-19
9.3.3.2.3.1 Turbine and Service Buildings 9.3-19
9.3.3.2.3.2 Miscellaneous Drainage System 9.3-20
9.3.3.3 Safety Evaluation 9.3-20
9.3.3.4 Testing and Inspection Requirements 9.3-21
9.3.3.5 Instrumentation Requirements 9.3-21
9.3.4 CHEMICAL AND VOLUME CONTROL SYSTEM 9.3-21
9.3.5 STANDBY LIQUID CONTROL SYSTEM 9.3-21
9.3.5.1 Design Bases 9.3-21
9.3.5.2 System Description 9.3-22
9.3.5.3 Safety Evaluation 9.3-24
9.3.5.4 Testing and Inspection Requirements 9.3-27
9.3.5.5 Instrumentation Requirements 9.3-27
9.3.6 REFERENCES 9.3-27

9.4 HEATING, VENTILATING, AND AIR CONDITIONING SYSTEMS 9.4-1
9.4.1 MAIN CONTROL ROOM/CABLE SPREADING ROOM/CRITICAL SWITCHGEAR AREA 9.4-2
9.4.1.1 Design Bases 9.4-2

Chapter 9

AUXILIARY SYSTEMS

TABLE OF CONTENTS (Continued)

Section — Page

9.4.1.2 System Description 9.4-4
9.4.1.2.1 Main Control Room 9.4-4
9.4.1.2.2 Cable Spreading Room 9.4-7
9.4.1.2.3 Critical Switchgear Area 9.4-7
9.4.1.3 Safety Evaluation 9.4-8
9.4.1.3.1 Main Control Room 9.4-8
9.4.1.3.2 Cable Spreading Room 9.4-9
9.4.1.3.3 Critical Switchgear Area 9.4-9
9.4.1.4 Testing and Inspection Requirements 9.4-9
9.4.1.5 Instrumentation Requirements 9.4-9
9.4.1.5.1 Main Control Room 9.4-10
9.4.1.5.2 Cable Spreading Room 9.4-10
9.4.1.5.3 Critical Switchgear Area 9.4-11
9.4.2 REACTOR BUILDING 9.4-11
9.4.2.1 Design Bases 9.4-11
9.4.2.2 System Description 9.4-13
9.4.2.2.1 Supply Air System 9.4-13
9.4.2.2.2 Exhaust Air System 9.4-14
9.4.2.2.3 Sump Vent Exhaust Filter System 9.4-14
9.4.2.2.4 Miscellaneous Area Ventilation Systems 9.4-15
9.4.2.3 Safety Evaluation 9.4-16
9.4.2.4 Testing and Inspection Requirements 9.4-17
9.4.2.5 Instrumentation Requirements 9.4-18
9.4.3 RADWASTE BUILDING 9.4-21
9.4.3.1 Design Bases 9.4-21
9.4.3.2 System Description 9.4-21
9.4.3.3 Safety Evaluation 9.4-23
9.4.3.4 Testing and Inspection Requirements 9.4-24
9.4.4 RADWASTE BUILDING CHILLED WATER SYSTEM 9.4-24
9.4.4.1 Design Bases 9.4-24
9.4.4.2 System Description 9.4-24
9.4.4.3 Safety Evaluation 9.4-25
9.4.4.4 Testing and Inspection Requirements 9.4-25
9.4.4.5 Instrumentation Requirements 9.4-25
9.4.5 OFFGAS CHARCOAL ADSORBER VAULT REFRIGERATION SYSTEM 9.4-25

Chapter 9

AUXILIARY SYSTEMS

TABLE OF CONTENTS (Continued)

Section — Page

9.4.6 TURBINE GENERATOR BUILDING 9.4-26
9.4.6.1 Design Bases 9.4-26
9.4.6.2 System Description 9.4-27
9.4.6.2.1 Main Supply System 9.4-27
9.4.6.2.2 Main Exhaust System 9.4-27
9.4.6.2.3 Auxiliary Boiler Room Ventilation System 9.4-28
9.4.6.2.4 Transformer Vault Ventilation System 9.4-28
9.4.6.2.5 Sample Room Air Conditioning System 9.4-29
9.4.6.3 Safety Evaluation 9.4-29
9.4.6.4 Testing and Inspection Requirements 9.4-29
9.4.6.5 Instrumentation Requirements 9.4-30
9.4.7 EMERGENCY DIESEL GENERATOR BUILDING 9.4-30
9.4.7.1 Design Bases 9.4-30
9.4.7.2 System Description 9.4-31
9.4.7.3 Safety Evaluation 9.4-32
9.4.7.4 Testing and Inspection Requirements 9.4-32
9.4.7.5 Instrumentation Requirements 9.4-32
9.4.8 DIESEL GENERATOR AREA CABLE COOLING SYSTEM 9.4-33
9.4.8.1 Design Bases 9.4-33
9.4.8.2 System Description 9.4-34
9.4.8.3 Safety Evaluation 9.4-34
9.4.8.4 Inspection and Testing Requirements 9.4-35
9.4.8.5 Instrumentation Requirements 9.4-35
9.4.9 REACTOR BUILDING EMERGENCY COOLING SYSTEMS 9.4-36
9.4.9.1 Design Bases 9.4-36
9.4.9.2 System Description 9.4-37
9.4.9.3 Safety Evaluation 9.4-37
9.4.9.4 Testing and Inspection Requirements 9.4-37
9.4.9.5 Instrumentation Requirements 9.4-37
9.4.10 STANDBY SERVICE WATER PUMP HOUSE 9.4-38
9.4.10.1 Design Bases 9.4-38
9.4.10.2 System Description 9.4-39
9.4.10.3 Safety Evaluation 9.4-40
9.4.10.4 Testing and Inspection Requirements 9.4-40
9.4.10.5 Instrumentation Requirements 9.4-40

Chapter 9

AUXILIARY SYSTEMS

TABLE OF CONTENTS (Continued)

Section — Page

9.4.11 PRIMARY CONTAINMENT 9.4-41
9.4.11.1 Design Bases 9.4-41
9.4.11.2 System Description 9.4-42
9.4.11.3 Safety Evaluation 9.4-42
9.4.11.4 Testing and Inspection Requirements 9.4-43
9.4.11.5 Instrumentation Requirements 9.4-43
9.4.12 MAKEUP WATER PUMP HOUSE 9.4-43
9.4.12.1 Design Bases 9.4-43
9.4.12.2 System Description 9.4-44
9.4.12.3 Safety Evaluation 9.4-45
9.4.12.4 Testing and Inspection Requirements 9.4-45
9.4.12.5 Instrumentation Requirements 9.4-46
9.4.13 SERVICE BUILDING 9.4-46
9.4.13.1 Design Bases 9.4-46
9.4.13.2 System Description 9.4-46
9.4.13.3 Safety Evaluation 9.4-47
9.4.14 WATER TREATMENT AREA AND MACHINE SHOP 9.4-47
9.4.14.1 Design Bases 9.4-47
9.4.14.2 System Description 9.4-47
9.4.14.3 Safety Evaluation 9.4-47
9.4.15 CIRCULATING WATER PUMP HOUSE 9.4-48
9.4.15.1 Design Bases 9.4-48
9.4.15.2 System Description 9.4-48
9.4.15.3 Safety Evaluation 9.4-49
9.4.15.4 Testing and Inspection Requirements 9.4-49
9.4.15.5 Instrumentation Requirements 9.4-49
9.4.16 PLANT HEATING STEAM SYSTEM 9.4-50
9.4.16.1 Design Basis 9.4-50
9.4.16.2 System Description 9.4-50
9.4.16.3 Safety Evaluation 9.4-51
9.4.16.4 Testing and Inspection Requirements 9.4-51
9.4.16.5 Instrumentation Requirements 9.4-51
9.4.17 REFERENCES 9.4-51

9.5 OTHER AUXILIARY SYSTEMS 9.5-1
9.5.1 FIRE PROTECTION SYSTEM 9.5-1

Chapter 9

AUXILIARY SYSTEMS

TABLE OF CONTENTS (Continued)

Section — Page

9.5.2 COMMUNICATIONS SYSTEMS 9.5-1
9.5.2.1 Design Basis 9.5-1
9.5.2.2 System Description 9.5-2
9.5.2.2.1 Public Telephone Access 9.5-2
9.5.2.2.2 Private Branch Exchange 9.5-3
9.5.2.2.3 Sound-Powered Telephone System 9.5-4
9.5.2.2.4 Public Address and Building-Wide Alarm Systems 9.5-4
9.5.2.2.4.1 Public Address System 9.5-4
9.5.2.2.4.2 Building/Zone-Audio Alarm System 9.5-4
9.5.2.2.5 Radio Communications System 9.5-5
9.5.2.2.6 Telephone Link for Connection to the BPA Dittmer Control Center 9.5-6
9.5.2.3 Inspection and Testing Requirements 9.5-7
9.5.2.4 Capability During Postulated Accident and Anticipated Transients 9.5-7
9.5.2.4.1 Protective Measures 9.5-7
9.5.2.4.2 Severing of Lines or Trunks 9.5-8
9.5.2.4.3 High Noise 9.5-8
9.5.2.4.4 Post-Fire Safe Shutdown 9.5-8
9.5.3 PLANT LIGHTING SYSTEM 9.5-9
9.5.3.1 Design Bases 9.5-9
9.5.3.2 System Description 9.5-9
9.5.3.2.1 Normal Alternating Current (ac) Lighting Systems 9.5-9
9.5.3.2.2 Normal-Emergency ac Lighting Systems 9.5-9
9.5.3.2.3 Emergency Direct Current (dc) Lighting Systems 9.5-10
9.5.3.2.4 Battery-Pack Emergency Lighting Systems 9.5-10
9.5.3.3 Safety Evaluation 9.5-11
9.5.4 DIESEL GENERATOR FUEL OIL STORAGE AND TRANSFER SYSTEM 9.5-11
9.5.4.1 Design Bases 9.5-11
9.5.4.2 System Description 9.5-12
9.5.4.3 Safety Evaluation 9.5-15
9.5.4.4 Testing and Inspection Requirements 9.5-16
9.5.4.5 Instrumentation Requirements 9.5-16
9.5.5 DIESEL GENERATOR COOLING WATER SYSTEM 9.5-17
9.5.5.1 Design Bases 9.5-17
9.5.5.2 System Description 9.5-18
9.5.5.3 Safety Evaluation 9.5-20

Chapter 9

AUXILIARY SYSTEMS

TABLE OF CONTENTS (Continued)

Section Page

9.5.5.4 Testing and Inspection Requirements 9.5-20
9.5.6 STARTING AIR SYSTEM 9.5-21
9.5.6.1 Design Bases 9.5-21
9.5.6.2 System Description 9.5-21
9.5.6.3 Safety Evaluation 9.5-23
9.5.6.4 Testing and Inspection Requirements 9.5-23
9.5.7 DIESEL GENERATOR LUBRICATION SYSTEM 9.5-23
9.5.7.1 Design Bases 9.5-24
9.5.7.2 System Description 9.5-26
9.5.7.3 Safety Evaluation 9.5-26
9.5.7.4 Testing and Inspection Requirements 9.5-26
9.5.8 DIESEL GENERATOR COMBUSTION AIR INTAKE AND EXHAUST SYSTEM 9.5-27
9.5.8.1 Design Bases 9.5-27
9.5.8.2 System Description 9.5-27
9.5.8.3 Safety Evaluation 9.5-28
9.5.8.4 Inspection and Testing Requirements 9.5-29
9.5.9 PLANT DECONTAMINATION FACILITY 9.5-29
9.5.9.1 Design Bases 9.5-29
9.5.9.2 System Description 9.5-30
9.5.9.3 Safety Evaluation 9.5-30
9.5.9.4 Testing and Inspection Requirements 9.5-30
9.5.10 REFERENCES 9.5-31

Chapter 9

AUXILIARY SYSTEMS

LIST OF TABLES

Number	Title	Page
9.1-1	9 x 9-9X, SVEA-96, and ATRIUM-10 Assembly Parameters	9.1-67
9.1-2	Calculated Dose Rate During Refueling	9.1-68
9.1-3	Fuel Pool Cooling and Cleanup System	9.1-69
9.1-4	Spent Fuel Pool Projected Heat Loads (DELETED)	9.1-70
9.1-5	Fuel Pool Cooling and Cleanup System Performance Data	9.1-72
9.1-6	Bounding Fuel Pool Cooling Events	9.1-73
9.1-7	Tools and Servicing Equipment	9.1-75
9.2-1	Ultimate Heat Sink Spray Cooling Pond Design	9.2-29
9.2-2	Spray System Design	9.2-30
9.2-3	Diurnal Variation in Meteorological Data	9.2-31
9.2-4	Flow Rates and Associated Heat Loads Used in the Ultimate Heat Sink Analysis	9.2-35
9.2-5	Heat Load Rates Used in Ultimate Heat Sink Analysis	9.2-38
9.2-6	Spray Pond Water Losses and Content (30 days after design basis LOCA event)	9.2-40
9.2-7	Source of Spray Pond Makeup Water	9.2-41
9.2-8	Standby Service Water System Failure Analysis	9.2-42
9.2-9	Integrated Heat Data - Ultimate Heat Sink Reanalysis	9.2-44
9.3-1	Equipment Characteristics	9.3-29
9.3-2	Available Sample Locations	9.3-31

Chapter 9

AUXILIARY SYSTEMS

LIST OF TABLES (Continued)

Number	Title	Page
9.4-1	Main Control Room/Cable Spreading Room/Critical Switchgear Area Major Components of HVAC Systems	9.4-53
9.4-2	Reactor Building and Primary Containment Areas Major Components of HVAC Systems	9.4-55
9.4-3	Radwaste Building Area Major Components of HVAC Systems	9.4-61
9.4-4	Turbine Generator Building Major Components of HVAC Systems	9.4-65
9.4-5	Diesel Generator Building Areas Major Components of HVAC Systems	9.4-67
9.4-6	Standby Service Water Pump House Areas Major Components of HVAC Systems	9.4-69
9.4-7	Makeup Water Pump House Major Components of HVAC Systems	9.4-70
9.4-8	Circulating Water Pump House Major Components of HVAC Systems	9.4-71
9.4-9	Plant Heating Steam System	9.4-72
9.5-1	Strategic Work Area Communication	9.5-32
9.5-2	Locations of Fixed Emergency Lighting	9.5-34
9.5-3	Diesel Generator Fuel Oil Storage and Transfer System	9.5-37
9.5-4	Diesel Generator Heat Exchanger Design and Performance Data	9.5-38

Chapter 9

AUXILIARY SYSTEMS

LIST OF FIGURES

Number	Title
9.1-1	New Fuel Storage Vault Fuel Loading Pattern
9.1-2	New Fuel Storage
9.1-3	Typical Spent Fuel Rack 12 x 16 Array
9.1-4	Spent Fuel Pool Arrangement
9.1-5	General Arrangement Plan - El. 572 ft 0 in. and El. 606 ft 10-1/2 in. - Reactor Building
9.1-6	Fuel Pool Cooling and Cleanup System (Sheets 1 and 2)
9.1-7	Fuel Preparation Machine Shown Installed in Facsimile Fuel Pool
9.1-8	New Fuel Inspection Stand
9.1-9	Channel Bolt Wrench
9.1-10	Channel Handling Tool
9.1-11	Fuel Inspection Fixture
9.1-12	General Purpose Grapple
9.1-13	Plant View of Refueling Facilities
9.1-14	Simplified Section of New Fuel Handling Facilities - Section X-X
9.1-15	Simplified Section of Refueling Facilities - Section Y-Y
9.1-16	Simplified Section of Fuel Shipping Facilities - Section Z-Z
9.1-17	Cavity In-Vessel Service Platform (CISP) Plan View
9.1-18	Cavity In-Vessel Service Platform (CISP) Sectional View

Chapter 9

AUXILIARY SYSTEMS

LIST OF FIGURES (Continued)

Number	Title
9.2-1	Plant Service Water System (Sheets 1 and 2)
9.2-2	Closed Cooling Water System - Reactor and Radwaste Buildings (Sheets 1 and 2)
9.2-3	Makeup Water Treatment System
9.2-4	Demineralized Water System
9.2-5	Potable Hot and Cold Water (Sheets 1 through 3)
9.2-6	Plant Sanitary Drain System
9.2-7	Composite Piping Plan, Sections and Details, Spray Ponds
9.2-8	Drift Loss Test Results
9.2-9	Temperature Response Following Design Basis LOCA (Standby Service Water)
9.2-10	Water Inventory in UHS Following Design Basis LOCA
9.2-11	Condensate Supply System (Sheets 1 and 2)
9.2-12	Standby Service Water System (Sheets 1 through 3)
9.2-13	Composite Piping - Standby Service Water Pump House No. 1A Plan, Sections, and Details
9.2-14	Composite Piping - Standby Service Water Pump House No. 1B Plan, Sections, and Details
9.2-15	Flow Diagram - Compressor Jacket Water System - Turbine Generator Building
9.3-1	Control and Service Air System (Sheets 1 through 5)

Chapter 9

AUXILIARY SYSTEMS

LIST OF FIGURES (Continued)

Number	Title
9.3-2	Containment Instrument Air System (Sheets 1 and 2)
9.3-3	Steam and Liquid Sampling - Turbine and Service Buildings
9.3-4	Steam and Liquid Sampling - Reactor Building
9.3-5	Steam and Liquid Sampling - Radwaste Building
9.3-6	General Sample Probe
9.3-7	Sample Probe RFW-SP-3
9.3-8	Feedwater Condensate Sample Probe
9.3-9	Equipment Drain System - Reactor Building
9.3-10	Floor Drains - Turbine Building Equipment
9.3-11	Radwaste Building Equipment and Floor Drains
9.3-12	Floor Drains - Reactor Building
9.3-13	Nonradioactive Floor Drains
9.3-14	Standby Liquid Control System - Reactor Building
9.3-15	Sodium Pentaborate Decahydrate Volume Concentration Requirements
9.3-16	Saturation Temperature of Sodium Pentaborate Solution
9.3-17	Flow Diagram, Steam and Liquid Sampling - Reactor Building
9.4-1	HVAC for Control and Switchgear Rooms - Radwaste Building (Sheets 1 through 3)
9.4-2	HVAC Systems - Reactor Building (Sheets 1 through 3)

Chapter 9

AUXILIARY SYSTEMS

LIST OF FIGURES (Continued)

Number	Title
9.4-3	HVAC Systems - Radwaste Building (Sheets 1 and 2)
9.4-4	HVAC Chilled Water System - Radwaste Building (Sheets 1 and 2)
9.4-5	HVAC Offgas Charcoal Adsorber Vault - Radwaste Building
9.4-6	HVAC Systems - Turbine Generator Building (Sheets 1 and 2)
9.4-7	HVAC - CW, SW, and MUW Pump Houses and Diesel Generator Building
9.4-8	Flow Diagram - Reactor Building Primary Containment Cooling and Purging System (Sheets 1 through 3)
9.4-9	Heating Steam System - All Buildings (Sheets 1 and 2)
9.5-1	Diesel Oil and Miscellaneous Systems (Sheets 1 through 4)
9.5-2	General Arrangement - Diesel Generator Building
9.5-3	Supporting Systems - Lubricating Oil System and Engine Cooling Water System with Immersion Heater System - Turbocharged Units
9.5-4	Normal Engine Operation Lube Oil System - Turbocharged Engines
9.5-5	Decontamination Area General Arrangement Plan
9.5-6	Schematic Diagram - Standby Lube Oil Circulating and Keep Full System

Chapter 9

AUXILIARY SYSTEMS

9.1 FUEL STORAGE AND HANDLING

9.1.1 NEW FUEL STORAGE

9.1.1.1 Design Bases

9.1.1.1.1 Safety Design Bases

9.1.1.1.1.1 Safety Design Bases - Structural.

a. The new fuel storage racks containing a full complement of fuel assemblies are designed to withstand all credible static and dynamic loadings, to prevent damage to the structure of the racks and the contained fuel, and to minimize distortion of the rack arrangement [see Table 3.9-2(s)],

b. The racks are designed to protect the fuel assemblies from excessive physical damage so as to prevent the release of radioactive materials in excess of 10 CFR 20 limits under normal or abnormal conditions,

c. The racks are constructed in accordance with the Quality Assurance Requirements of 10 CFR Part 50, Appendix B,

d. The new fuel storage racks are categorized as Safety Class 2 and Seismic Category I, and

e. The new fuel storage vault is located within secondary containment in the reactor building and therefore complies with the objectives set forth in Regulatory Guide 1.13, and General Design Criteria (GDC) 2, 3, 4, 5, 61, 62 and 63 of 10 CFR Part 50, Appendix A.

9.1.1.1.1.2 Safety Design Bases - Nuclear.

a. The new fuel storage racks are designed and maintained with sufficient spacing between the new fuel assemblies to ensure that the array shall be subcritical by at least 5% Δk, including allowance for calculation biases and uncertainties.

Calculations were performed to ensure that $k_{eff} \leq 0.95$ for all water mist densities up to 1.0 gm/cm^3 in and around the fuel. The new fuel storage vault was modeled using the KENO

computer code (Reference 9.1-1). GE14 and GNF2 fuel bundles were modeled using the MCNP01A (GEH's version of MCNP4A) computer code (Reference 9.1-10).

The biases between the calculated results and experimental results, as well as the uncertainty involved in the calculations, are taken into account as part of the calculation procedure to ensure that the specified K_{eff} limits are met.

b. Columbia has chosen to comply with 10 CFR 50.68, "Criticality Accident Requirements".

9.1.1.1.2 Power Generation Design Bases

a. New fuel storage racks provide for approximately 8% of the full core fuel load, and

b. New fuel storage racks are designed and arranged so that the fuel assemblies can be handled efficiently during refueling operations.

9.1.1.2 Facilities Description

The new fuel storage vault containing the new fuel storage racks is a concrete structure adjacent to the spent fuel pool at the refueling floor level of the reactor building (see Figure 1.2-10). The reactor building is built to Seismic Category I requirements and is further discussed in Section 3.2. The new fuel rack design features are as follows:

a. The new fuel storage vault contains 24 sets of castings, with each casting containing 10 possible storage locations. A maximum of 60 fuel storage positions will be used. The remaining storage locations will be blocked with a positive physical barrier, such that no fuel can be placed in the blocked positions. Figure 9.1-1 shows the locations where fuel will be stored;

b. There are three tiers of castings positioned by fixed box beams. The castings hold the fuel assemblies in a vertical position; the fuel assemblies are supported at the lower tie plate, with additional lateral support;

c. The lower casting is designed to support the weight of the fuel assembly and restrict lateral movement when used in the as-built configuration. To facilitate the assembly of ABB type fuel, a stub tube rests in the bottom casting to raise the fuel approximately 30 in. The center and top castings restrict only lateral movement of the fuel assembly;

d. The new fuel storage racks are made from aluminum. Materials used for construction are specified in accordance with the latest issue of applicable ASTM specifications. The material choice is based on a consideration of the susceptibility of various metal combinations to electrochemical reaction. When

considering the susceptibility of metals to galvanic corrosion, aluminum and stainless steel are similar insofar as their coupled potential is concerned. The use of stainless steel fasteners in aluminum to avoid detrimental galvanic corrosion is a recommended practice and has been used successfully for many years by the aluminum industry. The stub tubes are used when assembling Westinghouse type fuel, are made of stainless steel and are not directly fastened to lower casting;

e. Lead-in and lead-out of the casting provide guidance of the fuel assembly during insertion or withdrawal; and

f. The nominal center-to-center spacing with rows is 7 in. and between rows is 12 in. However, as shown in Figure 9.1-1, face adjacent locations are not used. The fuel assembly center-to-center spacing is a multiple of the above dimensions.

The fuel assemblies are loaded into the rack through the top. Each hole for a fuel assembly has adequate clearance for inserting or withdrawing the assembly channeled or unchanneled. Sufficient guidance is provided to preclude damage to the fuel assemblies. The design of the racks and the blocking devices prevent accidental insertion of the fuel assembly into a position not intended for the fuel. The only spaces in the racks are those into which it is intended to insert fuel. The weight of the fuel assembly is supported by the lower tie plate which is seated in a chamfered hole or stub tube in the base casting.

The floor of the new fuel storage vault is sloped towards a drain located at the low point. This removes any water that may be accidentally and unknowingly introduced into the vault. The drain is part of the floor drain subsystem of the liquid radwaste system.

The radiation monitoring equipment for the new fuel storage area is described in Section 12.3.4.

9.1.1.3 Safety Evaluation

9.1.1.3.1 Criticality Control

The calculations of k_{eff} are based on the geometrical arrangements of the fuel array, and that subcriticality does not depend on the presence of neutron absorbing materials. To meet the requirements of GDC 62, geometrically safe configurations of fuel stored in the new fuel array are used to ensure that k_{eff} will not exceed 0.95 if fuel is stored in the dry condition or in an abnormal mist condition with water densities up to 1.0 g/cm^3.

The new fuel storage vault has concrete covers with rubber seals.

The fuel storage rack is designed using noncombustible materials. New fuel storage vault covers prevent optimum moderation in the new fuel vault (water density between 0 and 1 g/cc).

The GE14 fuel assembly is a 10 x 10 fuel rod array with 2 internal water channels offset in the center of the assembly (displacing 8 fuel rod locations). The GE14 nominal design parameters are listed in Reference 9.1-14, Table 2-1. The GE14 new fuel storage vault model makes several key assumptions:

a. New fuel assemblies are assumed to contain the highest enriched unexposed lattice for the entire length of the assembly and are associated with a beginning-of-life reactivity of 1.31 with benchmark uncertainties included.

b. The GE14 analysis assumes infinite fuel in the axial direction (no axial reflector) for normal dry storage conditions and fully flooded abnormal conditions. Neutron absorption in fuel structural components is neglected.

c. The GE14 analysis assumes a finite geometry for a single new fuel vault loaded in accordance with the loading pattern shown in Figure 9.1-1. Neutron leakage is assumed on all sides, top, and bottom for optimally moderated abnormal conditions. Neutron absorption in fuel structural components is neglected with the exception of the concrete walls of the new fuel storage vault.

d. Up to 3 GE14 bundles can be safely handled in the spent fuel pool, outside of the spent fuel rack, in any configuration.

e. The results of the analysis include a statistical rollup of all significant manufacturing and calculational uncertainties and abnormal storage condition biases.

f. An infinitely long fuel bundle is modeled to lie horizontally at 1 cm above the active fuel region of the rack.

g. An abnormal condition that evaluates a misplaced fuel bundle that is loaded in addition to the fully loaded fuel loading pattern, shown in Figure 9.1-1, in a position that yields the optimum reactivity for the scenario.

The GNF2 fuel assembly is a 10 x 10 fuel rod array with 2 internal water channels offset in the center of the assembly. The GNF2 nominal parameters are listed in Reference 9.1-14, Table 2-1. The GNF2 new fuel storage vault model is consistent with the model described for GE14 (Reference 9.1-13).

9.1.1.3.2 New Fuel Rack Structural Design

The new fuel storage racks are designed to meet Seismic Category I requirements.

The maximum stress in the fully load rack in a faulted condition is 16.5 kips. This is significantly lower than the allowable stress.

The storage rack is designed to withstand horizontal combined loads up to 222,000 lb, well in excess of expected loads.

The storage rack is designed to withstand the pull-up force of 4000 lb and a horizontal force of 1000 lb. There are no readily available forces in excess of 1000 lb. The racks are designed with lead outs to prevent sticking. However, in the event of a stuck fuel bundle, the upward force on the racks is limited to the 1000 lb load limit of the jib crane (MT-CRA-9A or 9B) used to handle new fuel.

The storage rack structure (Figure 9.1-2) is designed to withstand the impact resulting from a falling weight. Tests using a simulated fuel bundle have been conducted to verify that the rack casting can withstand the impact from a bundle dropped from above the array. During testing the lowest drop to cause the rack casting to exceed ultimate stress was a drop of 6.17 ft (4314 ft/lb) made at mid span.

Therefore, procedural requirements dictate that no more than one bundle at a time can be handled over the storage array. These requirements ensure that the racks cannot be displaced in a manner causing critical spacing as a result of impact from a dropped fuel assembly. Since the 125-ton reactor building crane can traverse the full length of the refueling floor, administrative controls will prohibit carrying loads over the new fuel.

9.1.1.3.3 New Fuel Handling

New fuel is carried to the new fuel vault and placed in the storage rack with jib crane MT-CRA-9A or 9B or the reactor building crane auxiliary hoist. To handle the new fuel, rigging controlled by plant procedures is used, which interfaces with the lifting device at the upper end and the fuel bundle bail at the lower end.

During the positioning of a new fuel assembly into the new fuel rack, the rigging is always above the upper fuel rack casting. The rigging interfaces only with the fuel bundle bail, thus precluding engagement of the fuel rack. The transfer devices used for new fuel handling to the new fuel vault, therefore, cannot impose uplift loads on the rack castings. See Section 9.1.4.2.10.1 for further discussion of new fuel handling.

9.1.1.3.4 Other New Fuel Storage Design Factors

The new fuel racks are designed to be restrained by holddown bolts to ensure that rack spacing does not vary during the safe shutdown earthquake (SSE).

The storage rack structure is so designed that the height of the rack is less than the length of the fuel bundle. Therefore, the upper tie plate of the bundle cannot pass below the top cross member of the rack. Also, the fuel bundle insertion spaces in the top casting of the rack have

a lead in chamfer on the upper and lower surfaces. These design features prevent any tendency of the fuel bundle to jam during insertion into or removal from the rack.

The new fuel storage rack castings are made from aluminum and are secured by stainless steel fasteners. Materials used for construction are specified in accordance with ASTM Specifications B108, B179, B209, B211, and B221 dated January 1971.

The new fuel storage racks do not require any periodic special testing or inspection for nuclear safety purposes.

9.1.2 SPENT FUEL STORAGE

9.1.2.1 Design Bases

9.1.2.1.1 Safety Design Bases

9.1.2.1.1.1 Safety Design Bases - Structural.

a. The spent fuel storage racks are designed to withstand the affects of the SSE and remain functional and maintain subcriticality. The racks are also designed to withstand the impact of a dropped fuel assembly or the upward force of a stuck assembly without loss of function. The racks are designed and fabricated to meet seismic and quality class requirements per 10 CFR 50, Appendix B;

b. The spent fuel storage facility is located so that no missiles can enter the fuel pool with the necessary energy to cause any damage to the fuel; and

c. The reactor building containing the spent fuel storage facility provides the capability for limiting the potential offsite exposures in accordance with 10 CFR Part 100 in the event of significant release of radioactivity from the stored fuel.

9.1.2.1.1.2 Safety Design Bases - Nuclear.

a. The center-to-center spacing between stored fuel assemblies in a fully loaded rack is sufficient to maintain a k_{eff} less than 0.95 at a conservative water temperature.

b. The spent fuel storage rack design precludes storage of a fuel assembly other than where intended at a nominal 6.5 in. center to center distance between fuel assembly placed in the storage rack.

c. The spent fuel storage racks are designed to allow adequate cooling of the stored spent fuel assemblies; and

d. Shielding for the spent fuel storage arrangement is sufficient to protect plant personnel from exposure to radiation in excess of 10 CFR Part 20 limits.

e. Columbia has chosen to comply with 10 CFR 50.68, "Criticality Accident Requirements".

9.1.2.1.2 Power Generation Design Bases

a. Spent fuel storage space in the fuel storage pool is for 2658 fuel assemblies, and

b. Spent fuel storage racks are designed and arranged so that fuel assemblies can be handled efficiently during refueling operations.

9.1.2.2 Facilities Description

9.1.2.2.1 Spent Fuel Storage Racks

Spent fuel storage racks provide a place in the fuel pool for storing the spent fuel discharged from the reactor vessel. They are top entry racks, designed to maintain the spent fuel in a space geometry that precludes the possibility of criticality under both normal and abnormal conditions. This is accomplished with the aid of neutron absorbing plates. The location of the spent fuel pool within the plant is shown in Figures 1.2-10 and 1.2-11.

The spent fuel storage rack design, shown in Figure 9.1-3, consists of fuel storage cells which are square stainless steel tubes with neutron absorbing B_4C plates between them. A stainless steel plate grid at the top and the bottom of the tubes, to which the tubes are welded, form the tubes into racks and maintain center-to-center spacing between the tubes at 6.5 in. The racks are welded together into modules which are held firmly in place by seismic restraints attached between the rack modules and the pool wall. The storage racks are made of stainless steel. The square tube storage cells are 1/8 in. thick.

The neutron absorber plates have nominal dimensions of 19 in. long, 5.88 in. wide, and 0.2 in. thick. They are composed of B_4C granular material bonded together to form a plate of uniform properties. They have a nominal B-10 loading of 0.0959 g/cm^2 of plate and a plate density of 0.05 lb/in^3. The plate has been shown by tests to have negligible corrosion in water and thermally stable over the range of pool water temperatures that can occur. The plates are seal welded in a stainless steel cavity to prevent water intrusion and are vented at the pool curb through sampling valves.

There are no load bearing requirements for the plates. Based on the results of the Modulus of Rupture tests, the plates will withstand approximately two times the calculated stresses caused by a postulated seismic event. Plate integrity and mechanical properties have been verified by

comprehensive tests. These tests included Modulus of Rupture and Modulus of Elasticity tests. The Modulus of Rupture testing was performed using a three point support method and was done on specimens at temperatures varying from ambient to 300°F, specimens soaked in water, and irradiated specimens. The modulus of elasticity was performed using a resonance procedure and was done at varying temperatures and after the plate had been immersed in water. The tests showed no swelling, cracking, or dimensional changes and provided verification of the plate mechanical properties required for the rack design.

To prevent distortion of the spent fuel rack cavities and binding of spent fuel assemblies due to pressure buildup, the enclosures are vented through an arrangement of tubing and sampling valves to above the storage pool water surface at the pool curb. Monitoring for offgas pressure, sampling of offgas, and venting to relieve pressure are provided for.

Different rack sizes are used (12 x 16, 12 x 13, 8 x 13, 7 x 18, and 11 x 16 arrays) to take full advantage of the fuel storage space in the pool (see Figure 9.1-4). The upper rack structures are welded to an elevated base plate which, in turn, is supported by a system of welded beams and stiffeners. The base serves to support the weight of the fuel assemblies and to distribute the load to the pool floor. The base plate contains an opening at each fuel assembly storage location which accommodates the fuel assembly lower nozzle. Natural circulation of pool water flows upward through the lower nozzle and the fuel assembly to remove decay heat. The storage cells are designed to provide lateral support for the storage assemblies

The minimum edge-to-edge distance of the assembly array from adjacent concrete walls is 16.75 in. between the edge of the C-14 storage rack and the shipping cask storage area wall.

The seismic restraints are stainless steel turnbuckles located between the pool walls and the racks around the periphery of the pool (Figure 9.1-4). They are located at both the top and bottom of the rack and will transmit the seismic forces of the operating basis earthquake (OBE) and the SSE between the racks and the walls and remain functional. The turnbuckles are connected at the wall to stainless steel bands which are embedded in the concrete wall and seal welded to the pool liner.

9.1.2.2.2 Spent Fuel Storage Pool

The spent fuel storage pool is designed to withstand earthquake loadings as a Seismic Category I structure. It is a reinforced-concrete structure completely lined with stainless steel, which provides a leakproof membrane that is resistant to abrasion and damage during normal and refueling operations. The stainless steel liner plates are seamwelded together and are anchored to the surrounding concrete by concrete anchors in the walls and structural members in the floor welded to the liner plates. Each liner weld seam is backed up by a drainage monitoring channel. These channels form a series of interconnecting systems designed to provide the following:

a. Detection, measurement, and location of any liner leakage,

b. Prevention of pressure buildup behind the liner plates due to leakage, and

c. Prevention of uncontrolled loss of contaminated pool water to other relatively clean locations within the secondary containment.

This network of drainage monitoring channels is embedded in the concrete behind the liners and is designed to permit free gravity drainage to the radioactive drain system, the flow of which is monitored.

The refueling canal connecting the spent fuel storage pool to the reactor well is provided with two gates in series, with a monitor drain between them. This arrangement permits monitoring for any leaks and facilitates repair of a gate or seal, if required.

A gamma scan collimator port is located 15 ft 11 in. from the bottom of the fuel pool and extends through the side of the pool. Through this port, gamma scanning of radioactive reactor components and spent fuel assemblies can be performed. This nondestructive method of analysis by the measurement of the gamma radiation being emitted by a material can indicate fuel enrichment, reactor power distribution, or fission product content of the component being analyzed.

The water supply to the spent fuel pool is provided and level maintained as described in Section 9.1.3.

9.1.2.3 Safety Evaluation

9.1.2.3.1 Criticality Control

9.1.2.3.1.1 8 x 8 Fuel. The design of the spent fuel storage racks provides for a subcritical multiplication factor (k_{eff}) of ≤ 0.95 for both normal and abnormal storage conditions. Normal conditions exist when the fuel storage racks are covered with a normal depth of water (about 23 ft above the active fuel) for radiation shielding, and with the maximum number of fuel assemblies or bundles in their design storage position. An abnormal condition may result from damage caused by accidental drop of a fuel assembly or stuck fuel assembly during attempted withdrawal.

The criticality analyses of the normal condition included several conservative assumptions as well as the effect of uncertainties in calculation method and geometric and material variations of the fuel storage rack. The following conservative assumptions were used in the calculation:

a. Fresh fuel of 3.25 wt % ^{235}U enrichment.

Initially the maximum enrichment will be much lower than this, but could approach this value if an 18-month fuel cycle is used. The enrichment selected is higher than the average enrichment of any fuel expected to be stored in the spent fuel pool. It was chosen because the fully loaded rack of fuel with this enrichment gives a more reactive condition than any presently foreseen;

b. Uniform planar array of 3.25 wt % enrichment fuel. Calculations have shown that this is conservative compared to the realistic, planar distributed enrichments within an assembly;

c. Spent fuel pool bulk water temperature 68°F. This is considerably lower than expected. Nevertheless, a calculation was done to determine the increase in reactivity due to a decrease in pool temperature to 32°F. The results showed the effect to be negligible;

d. Fuel racks are infinite in three dimensions; and

e. Fixed neutron poisons in the fuel assembly are neglected.

The majority of the calculations were performed with methods commonly used in light water reactor design; i.e., four-group diffusion theory cell calculations using PDQ-7 (Reference 9.1-2). Cross sections for these calculations are generated with NUMICE-2 (Reference 9.1-3), the NUS Corporation version of the Westinghouse LEOPARD code. This code uses the same cross section library tape and calculational techniques as LEOPARD. Selected cases were checked and the final design multiplication factors were verified with Monte Carlo calculations using KENO-IV (Reference 9.1-4), with a 123-group cross section library generated from a basic GAM-THERMOS library using two subroutines, NITAWL and XSDRNPM, in the AMPX1 (Reference 9.1-5) code package. Both the PDQ-7 and the KENO-IV calculation methods, as described above, have been benchmarked. These calculation methods, as described, were used for the Columbia Generating Station (CGS) calculation and do not contain any significant modifications.

Under normal conditions, for a center-to-center spacing of 6.5 in. between fuel assemblies with B_4C plates surrounding each stored fuel assembly, the k_{eff}, as determined using KENO, is 0.851. With the void space between the B_4C plates and the stainless steel box flooded with water, the KENO calculation yielded a lower k_{eff}. Calculation uncertainties were determined from comparison between calculation and experiments using KENO and a statistical evaluation of Monte Carlo runs. The results indicated a calculational uncertainty for the former of 0.013 Δk and for the latter 0.010 Δk at a 95% confidence level; this represents a total calculation uncertainty of 0.023 Δk. Mechanical spacing and tolerances acting in a direction close to the water gaps between adjacent racks result in a slight reactivity increase of 0.002 Δk. Production tolerances of B_4C plates result in a reactivity increase of 0.003 Δk.

To determine the effect of reduced or missing neutron absorbing material, it was assumed that one out of every 25 neutron absorber plates was missing. This case is extremely unlikely but shows poison variation sensitivity. The results of the calculation was an increase in reactivity of 0.015 Δk. A temperature decrease in pool water temperature of 32°F was included, i.e., 0.004 Δk. Adding the total calculational uncertainties of 0.023 Δk and the total geometric and material uncertainties of 0.024 Δk to the nominal k_{eff} results in a k_{eff} of 0.897 with a confidence level of 95%. This is well below the design basis of $\leq$0.95% for the normal wet condition.

Two abnormal conditions were also considered. They are (a) a dropped assembly assumed to lay across the top of a fuel rack and (b) a fuel assembly in transport in a vertical position, accidentally dropped into the water channels between racks. Of these two, the second condition is more severe. For the first condition, the end fittings on the top of the BWR assembly prohibits a spacing between the dropped assembly and the active fuel in the storage racks of less than 11.6 in. Using the same techniques, assumptions, and uncertainties previously discussed, the second case resulted in a k_{eff} of 0.903. This is only slightly different from the conservative normal condition and within the design basis k_{eff} of $\leq$0.95.

9.1.2.3.1.2 9 x 9 and 10 x 10 Fuel. The criticality safety of the spent fuel storage rack with 9 x 9-9X, SVEA-96 (10 x 10), ATRIUM-10 (10 x 10), GE14 (10 x 10) and GNF2 (10 x 10) fuel is assessed in accordance with NUREG 0800 and ANSI/ANS 57.2 (References 9.1-7, 9.1-8, 9.1-9, 9.1-11 and 9.1-13). The spent fuel storage rack meets the applicable criticality safety criteria subject to the conditions given below:

a. Fuel design - As specified below with a maximum enrichment of 4.0 wt % ^{235}U for 9 x 9-9X fuel.

b. For SVEA-96 fuel - Enrichment above 3.77 wt % ^{235}U is allowed in the spent fuel pool by determining the reactivity equivalency. Reactivity equivalency is predicated on the reduction in reactivity associated with the combination of fuel depletion and gadolinia burnable absorbers (Reference 9.1-8). The reactivity equivalency is checked for each SVEA assembly design for each reload. Any significant deviation from the fuel assembly geometry specified by this design will require additional analysis as specified in Westinghouse methodology (CE NPSD-786-P, Revision 1).

c. For ATRIUM-10 fuel, the maximum enriched lattice zone is ≤4.6 wt % ^{235}U with ≥10 gadolinia rods at ≥2.0 wt % Gd_2O_3. Any significant deviation from the fuel assembly geometry specified by this design will require additional analysis as specified in AREVA NP methodology (Reference 9.1-9).

d. The CGS spent fuel fuel storage racks were analyzed for the storage of GE14 fuel bundles. The analyses were performed with the MCNP01A (GEH's version of MCNP4A) Monte Carlo neutron transport program (Reference 9.1-

10). The GE14 spent fuel design basis bundle was analyzed in rack with an infinite lattice geometry and uniform 4.9w% U-235 enrichment, using both full and part length fuel rods with initial distributed fissile inventories, burnable absorber, and evaluated at its respective cold, uncontrolled, exposure-dependent reactivity statepoints. Representative placement and numbers of Gadolinium rods were used to model a peak in-core eigenvalue (k_∞) of 1.33 using the TGBLA06A production lattice physics code with benchmark uncertainties included. Any fuel meeting a k_∞ of 1.33 and the established in-core calculated benchmark uncertainties of the GE14 analysis are also bounded by the results of the GE14 analysis. No further evaluation is required.

e. The CGS spent fuel storage racks were analyzed for the storage of GNF2 fuel bundles. The GNF2 spent fuel storage rack model is consistent with the model described for GE14. Reference 9.1-13 provides additional details about the GNF2 fuel storage analysis.

f. When stored, the fuel assemblies must be inserted into the fuel storage boxes such that no fully enriched fuel protrudes above the B_4C absorber plates to a maximum fuel assembly protrusion of less than six in. (i.e., no more than 11.4 in. from the top of the bail handle to the top of the storage rack).

g. B_4C content in the absorber plates is constant over time; and

h. The B_4C plates contain no significant gaps.

The key assembly design parameters used in these calculations are listed in Table 9.1-1. The 9 x 9 assembly has 72 enriched uranium fuel rods. An internal water channel is located in the central portion of the assembly.

The SVEA-96 assembly has 96 fuel rods in a 10 x 10 array with four central rods missing. An internal cruciform water channel separates the 96 rods into four subassemblies of 24 rods each.

a. The neutron multiplication factors were calculated using KENO V.a,

b. Specular reflection was used with all models which means that no credit is taken for neutron leakage. In other words, k_∞ and k_{eff} are identical for the models used in this analysis, and

c. All codes and cross sections have been benchmarked against critical experiment data.

The major assumptions made in this analysis are as follows:

a. Fuel enrichment is the bundle average in all rod locations,

b. Fuel contains no burnable poisons,

c. No soluble poisons are present in the water,

d. Spent fuel pool bulk water temperature 68°F including a temperature decrease to 32°F,

e. B_4C content in the absorber plates is constant over time, and

f. The B_4C plates contain no significant gaps.

The first four assumptions make the analysis conservative. The last two are limiting conditions.

The ATRIUM-10 fuel assembly is a 10 x 10 fuel rod array with an internal water channel offset in the center of the assembly (displacing nine fuel rod locations). The assembly contains part length fuel rods constituting a "top" lattice (above the part length fuel rods) and a "bottom" lattice (below the part length fuel rods). The ATRIUM-10 nominal design parameters are listed in Table 9.1-1.

The following conservative assumptions are made:

a. The results are based on a moderator temperature of 4°C (39°F), which gives the highest reactivity for the fuel pool racks;

b. Fuel assemblies are assumed to contain the highest enriched lattice (highest reactive lattice) for the entire length of the assembly;

c. Each fuel assembly in the array is assumed to be at the peak reactivity of its lifetime;

d. Analyses assumes infinite fuel in the axial direction (no axial reflector);

e. Neutron absorption in fuel structural components is neglected; and

f. The maximum reactivity values include all significant manufacturing and calculational uncertainties.

The GNF2 and GE14 fuel assemblies are a 10 x 10 fuel rod array with 2 internal water rods offset in the center of the assembly (displacing 8 fuel rod locations). The GNF2 and GE14 nominal design parameters are listed in Table 2-1 of Reference 9.1-14.

The GNF2 and GE14 analysis 12 x 16 spent fuel storage rack model assumes several key assumptions:

a. Fuel assemblies are assumed to contain the highest enriched lattice for the entire length of the assembly and are associated with a peak in-core reactivity of 1.33 with benchmark uncertainties included.

b. The analysis assumes infinite fuel in the axial direction (no axial reflector).

c. Neutron absorption in fuel structural components is neglected.

d. The outer sides of the 12 x 16 storage rack array (Figures 9.1-3 and 9.1-4) contain no boron carbide absorber plates. Boron carbide absorber plates are only located along the inner walls of the spent fuel rack lattice structure. The 12 x 16 infinite array model is bounding for the actual spacing and rack configurations in the spent fuel pool with mixed adjacent 12 x 16 and 12 x 11 fuel arrays.

e. Up to three GNF2 and GE14 bundles can be safely handled in the spent fuel pool, outside of the spent fuel rack, in any configuration.

f. The results of the analysis include a statistical rollup of all significant manufacturing and calculation uncertainties and abnormal storage condition biases.

g. The following abnormal conditions have been evaluated as part of this analysis and have been accounted for within the bias of the maximum k-effective result:

    i. Four damaged fuel bundles surround the non-borated intersection of the four 12 x 16 array spent fuel storage racks. This model approximates the damage to the bundles by optimizing the fuel rod pitch of the design basis bundle within the fuel box without consideration of the bundle channel. The fuel rod arrays in each of the four fuel boxes are placed as close to the intersection of the four 12 x 16 arrays as possible. This model does not consider damage to the storage rack.

ii. Misplaced/dropped fuel bundle in between storage rack modules.

iii. An infinitely long fuel bundle is modeled to lie horizontally at 1 cm above the active fuel region of the rack.

iv. A single bundle protruding from the top of the borated region of the spent fuel rack by a maximum distance of 6 in.

All normal and credible abnormal conditions are found to have an acceptable reactivity, (k_{eff}) of ≤ 0.95 after adding the calculational uncertainty. The assumption that the entire fuel storage rack contains 9 x 9-9X fuel with up to 4.0 wt % ^{235}U, SVEA-96 fuel with up to 3.77 wt % ^{235}U, ATRIUM-10 fuel with each lattice zone ≤4.6 wt % ^{235}U with ≥10 gadolinia rods at ≥2 wt % Gd_2O_3 and GE14 and GNF2 fuel with ≤ 4.9 wt% ^{235}U and a Gd_2O_3 loading that corresponds to an in-core reactivity of 1.33 conservatively accounts for the presence and potential intermixing of older and lower enriched 8 x 8 fuel bundles.

9.1.2.3.2 Spent Fuel Storage Rack Structural Design

In accordance with Regulatory Guide 1.13, Revision 1, the spent fuel storage racks are designed to Seismic Category I requirements. Structural integrity of the racks when subject to normal and abnormal loads, as well as seismic loads, is demonstrated in accordance with the load requirements and acceptance criteria of Standard Review Plan Section 3.8.4. The loads considered are

a. Dead loads which are the dead weight of the rack and fuel assemblies and hydrostatic loads,

b. Live loads, i.e., the effect of lifting empty racks during installation,

c. Thermal loads, which include the uniform thermal expansion of the racks due to increases in average pool temperature, and a thermal gradient between adjacent storage locations,

d. The seismic forces of the OBE and SSE,

e. Accidental drop of a fuel assembly from the maximum possible height consistent with fuel handling operations, which is 4 ft above the top of fuel rack, and

f. Postulated stuck fuel assembly causing an upward force of 1200 lb, equal to the fuel grapple load limit to be exerted on the assembly upon attempted withdrawal.

The spent fuel storage racks were analyzed for six combinations of these loads using elastic working stress design methods. The combinations are

a. Dead loads plus live loads,
b. Dead loads plus OBE,
c. Dead loads plus thermal loads plus OBE,
d. Dead loads plus thermal loads plus SSE,
e. Dead loads plus thermal loads plus fuel assembly drop, and
f. Dead loads plus thermal loads plus stuck fuel assembly.

Live loads are not included in load combinations b through f. The only live load on the rack is that due to lifting of the racks which is performed with the racks empty. In all cases the loads were below the strength limits, which were determined from Part I of the AISC "Specification for the Design, Fabrication and Reaction of Structural Steel for Buildings," February 12, 1969, and Supplements 1, 2, and 3. (Supplement 3 was effective June 12, 1974.)

Individual fuel racks are welded into either 1 x 2 or 2 x 2 rack arrays or "super modules." These super modules are then attached to the fuel pool walls at two elevations by adjustable seismic restraints which are essentially large turnbuckles. These restraints are designed and positioned to eliminate any significant thermal growth loads on the walls.

The fundamental frequency of lateral vibration of the welded rack array yielding the lowest frequency was determined using the STARDYNE3 (Reference 9.1-6) computer program. The model, consisting of beam and plate elements and lumped masses, represents a three-dimensional 2 x 2 rack array. The model has an array of beams, representing fuel storage cans, connecting the upper and lower grids, and resting on a base grid which is held off the pool floor by support feet. The rack is restrained laterally by two levels springs, representing the seismic restraints. The stiffnesses of the fuel assemblies and B_4C neutron absorber plates conservatively were neglected. However, the mass of the fuel assemblies, as well as the mass of the B_4C plates and an effective mass of water was considered to be uniformly distributed over the height of the fuel boxes. The results of the STARDYNE analysis showed a lateral natural frequency of 14.7 Hz. A dynamic analysis was performed using the horizontal floor response spectra (damping 0.5% of critical).

The fundamental frequency of vertical vibration of the rack was also determined using the STARDYNE computer program. The same model replacing lateral mass with vertical mass was utilized. In this case, since the fuel rests on the base frame, the entire mass of the fuel was lumped at the base grid. Since the calculated frequency was 50.9 Hz and the vertical floor response spectra (damping 0.5% of critical) showed constant acceleration at frequencies in excess of 18 Hz, the effects of the vertical accelerations were considered using the zero-period acceleration in a static analysis. The lateral and vertical loads were considered to be acting simultaneously.

In the general seismic/structural analysis of the fuel racks, the mass of a fuel assembly is assumed to be uniformly distributed along the length of each of the fuel storage cans. Since a maximum gap on the order of 3/8 in. exists between the side of a fuel assembly and the can (when the fuel is not encased in a channel), the fuel will actually move within the can during a seismic event and cause impact loads to be transmitted to the fuel rack restraints. The effects of this fuel can interaction are determined using a simplified finite element model of the rack and fuel. A nonlinear dynamic analysis is performed using the ANSYS computer program. Details of this analysis are given in NUS Corporation Technical Report 2060, entitled "Fuel-Can Interaction Analysis," October 1977.

Using the given loads, load combinations, and analytical methods, stresses were calculated at critical sections of the rack and compared to the structural acceptance criteria. In all cases, the calculated stress did not exceed the allowable stress.

To ensure the integrity of the spent fuel storage racks in the event that water has leaked into the racks, specially designed control samples, consisting of B_4C plates in vented (to pool water) canisters, are placed in a readily accessible position in the spent fuel pool. These samples are subjected to periodic examinations to check for possible deterioration and they are also analyzed to ensure that the boron has not leached from the plates.

Section 15.7.4 presents an analysis (for radiological considerations) of fuel handling accidents.

The high density fuel rack designer, NUS Corporation, analyzed the fuel racks from both a structural and criticality standpoint concerning a 1510-lb object dropped from the surface of the fuel pool. The results indicated that none of the fuel rack damage that might occur in this situation would lead to a criticality problem. Details of these analyses are given in NUS Corporation Technical Reports 5326-FA-01 and G-RA-17 entitled, "Structural Analysis of the CGS Rack and Fuel Assemblies for an Accidental Object Drop Loading Condition," and "Criticality Analysis of Dropped Object Accident for WNP-2 Spent Fuel Storage Racks," respectively.

Similarly, independent analysis of GNF2 and GE14 fuel indicates that none of the fuel rack damage that might occur would result in increased reactivity that could exceed the 0.95 safety limit. This evaluation is based the guidance of NUREG-0612 and includes damage to the four

fuel bundles that surround the non-borated intersection of the four 12 x 16 array spent fuel storage racks (Figures 9.1-3 and 9.1-4). The 12 x 16 infinite array model is bounding for the actual spacing and rack configurations in the spent fuel pool with mixed adjacent 12 x 16 and 12 x 11 fuel arrays. This model approximates the damage to the bundles by optimizing the fuel rod pitch of the design basis bundle within the fuel box without consideration of the bundle channel. The fuel rod arrays in each of the four fuel boxes are placed as close to the intersection of the four 12 x 16 arrays as possible. The model does not consider damage to the storage rack.

During shutdown, crane operations over the spent fuel storage pool (when fuel assemblies are stored within) are suspended when operability of less than the required number of onsite and offsite power sources occurs, as defined in the Technical Specifications.

9.1.2.3.3 Spent Fuel and Cask Handling

The 125-ton reactor building crane traverses the full length of the refueling floor level of the reactor building. The design of the refueling floor provides aisles on both sides of the fuel pool for moving components past (and not over) the fuel storage pool. Interlocks on the reactor building crane prevent travel over the spent fuel racks. The interlock-controlled restricted area for crane travel is shown in Figure 9.1-5. The interlocks are bypassed only when it is necessary to operate the crane in the fuel pool area in conjunction with activities associated with fuel handling and storage. During these rare occasions when the interlocks are bypassed, administrative controls are used to prevent the crane from carrying loads that are not necessary for fuel handling or storage and which are in excess of the rack design drop load (one fuel assembly at 4 ft above the top of the fuel rack). See Section 9.1.2.3.2.

Transfer of fuel assemblies between the reactor well and the spent fuel pool is performed with the refueling platform (see Section 9.1.4.2.10.2). The fuel grapple or the auxiliary fuel hoist may be used, depending on the transfer operation.

The grapple and hoists are provided with load sensing and limiting devices designed to the following limits:

	NF-500 Fuel Grapple (lb)	Auxiliary Hoists (lb)
Load limiting switch NF500	1700	1000
Load sensing switch Auxiliary Hoist		535
Load sensing switch NF500	750	
Stall torque for hoist system	3000	3000

The load limiting features of the refueling platform grapple and auxiliary fuel hoist will prevent damage to the fuel racks if a fuel assembly accidentally engages a rack while being lifted.

These load limits provide a redundant safety feature since the fuel handling grapple is not lowered below the upper fuel rack and is designed to interface only with the fuel bail. Thus, the possibility of inadvertent direct lifting of the racks with the grapple is precluded.

Guard rails around the spent fuel pool prevent the falling of fuel handling area machinery into the pool. Other objects that could conceivably fall into the pool will not transfer energy amounts exceeding the specified limits of the fuel racks.

The preclusion of accidental dropping of the spent fuel cask on the spent fuel racks is accomplished by incorporating a separate cask storage area in the spent fuel pool, by interlocks on the reactor building crane, and by designing the path of the spent fuel cask to avoid passing over the spent fuel racks. The pool cask storage area is separated from the spent fuel racks by a wall over which the spent fuel is transferred.

For removal of spent fuel from the plant, a spent fuel cask is lowered into the cask area. Transfer of fuel to the cask is made over the wall between the spent fuel racks and the cask storage area. When the main hook of the reactor building crane removes the cask from the cask area, it follows the travel path shown in Figure 9.1-5. In addition, sufficient redundancy is provided in the reactor building crane such that no credible postulated failure of any crane component will result in the dropping of the fuel cask. See Section 9.1.4.2.2.

Failure of the gates between the reactor well and the spent fuel storage pool is improbable. However, in the event of this failure, the loss of water from the storage pool into the reactor well would not uncover the stored spent fuel due to the elevation of the weir wall under the gates. This elevation ensures that sufficient water is retained in the pool to cover the spent fuel.

To avoid unintentional draining of the spent fuel storage pool to levels below that required for adequate shielding of the spent fuel, no inlets, outlets, or drains that would normally permit the pool to be drained are provided. Discharge lines extending below the pool water level are designed to prevent any siphon back flow. Two skimmer surge tanks are provided and are sized to accommodate water displacement due to large items being placed into or removed from the spent fuel storage pool.

See Section 9.1.3 for additional evaluation of continuous cooling capabilities of the spent fuel pool cooling and cleanup (FPC) system.

9.1.2.3.4 Spent Fuel Rack Design Features

The rack, rack modules, and restraints are all stainless steel, as is the spent fuel pool liner, to minimize the potential for galvanic corrosion. Stainless steel has also been shown to be compatible with spent fuel pool water and the stored assemblies.

The fuel rack base is elevated above the floor to ensure adequate flow under the rack in each fuel assembly. Analyses have been performed and show that sufficient flow is induced by natural convection to preclude local boiling in the hottest storage location.

The analyses were based on the following assumptions:

a. The fuel element inlet temperature is the mixed hot design temperature of the pool,

b. A hot assembly peaking factor of 1.74 is applied to the core average assembly energy release rate of 5.3×10^4 Btu/hr,

c. The maximum local peaking factor is 2.49, giving a maximum local heat flux of 1334 Btu/hr-ft^2,

d. A film coefficient of 31 Btu/hr-ft^2-°F is based on pure conduction through a stagnant boundary layer at the fuel rod surface,

e. The downcomer region feeds 12 assemblies in a row, each assumed to be generating the maximum heat rate defined in assumption b, and

f. One dimensional fluid flow analysis applies.

During full core offload with the bulk pool temperature at a design value of 150°F, the mixed temperature of the water exiting from the hottest storage location is less than 181°F. This is 58°F below the local saturation temperature of 239°F, indicating that adequate margin to bulk boiling exists. Under normal operating conditions, the fuel rod surface temperature calculated on the basis of the heat flux and film coefficient defined above is more than 14°F below the local saturation temperature. Local boiling is thus precluded.

The fuel racks are designed, constructed, and fabricated with a high degree of reliability and integrity. A list of the industry design codes and standards used for the spent fuel storage racks is given below.

Design Codes

a. AISC Manual of Steel Construction, 7th Edition, 1970,

b. ASME Boiler and Pressure Vessel Code Section III-1971, Nuclear Power Plant Components. (Tables I-2.2, I-5.0, and I-6.0 are used for yield strength values, coefficients of thermal expansion, and moduli of elasticity),

c. AISC Specification for the Design, Fabrication, and Erection of Structural Steel for Buildings, February 12, 1969 and Supplements 1, 2, and 3 (Supplement 3 effective 6/12/74),

d. ASTM Specification A 240-75a, Specification for Heat-Resisting Chromium and Chromium-Nickel Stainless Steel Plate Sheet and Strip for Fusion-Welded Unfired Pressure Vessels,

e. ASTM Specification A 320-74, Specification for Alloy Steel Bolting Materials for Low-Temperature Service,

f. AWS A 5.9, Corrosion Resisting Chromium and Chromium-Nickel Steel Welding Rods and Bare Electrodes, and

g. ASME Boiler and Pressure Vessel Code Section IX-1974, Welding and Brazing Qualification.

9.1.2.3.5 Spent Fuel Storage Facilities Design

The spent fuel storage pool is designed to Seismic Category I requirements to prevent earthquake damage to the stored fuel. The exterior walls and roof of the reactor building are designed as low-leakage barriers to confine potential airborne radiation (contamination) within the reactor building and the exhaust air treatment systems.

Release of radioactive products from damaged or failed fuel in the spent fuel pool will be detected by a high level gamma radiation monitor located in the fuel pool vicinity. This instrument has a range of 100 to 10^6 mrem/hr with remote readout and alarm in the main control room. Backup detection provided by high radioactivity monitors in the reactor building ventilation system exhaust plenum (see Section 9.4.2) will initiate reactor building ventilation system isolation and operation of the standby gas treatment system (see Section 6.5.1) to block potential leakage of contaminated air to the environment. See Chapter 15 for radiological considerations.

The spent fuel storage pool contains a minimum water depth of 22 ft above the top of the irradiated fuel assemblies seated in the spent fuel storage racks. A low water level alarm is provided in the control room in the event of loss of pool water. As a backup, flow alarms are provided in the drain lines to detect leakage in the reactor vessel to drywell seal, drywell to concrete seal, and fuel pool gate. An adequate fuel pool water level can be maintained, even in the unlikely event of a pipe break between the skimmer surge tanks and the FPC system pumps, since fuel pool discharge to the skimmer surge tanks is by overflow only. A pipe break would drain the skimmer surge tank but would not reduce the spent fuel storage level. A check valve in each supply pipe from the FPC system prevents siphon back flow to the cleanup system. Provision is also made so that standby service water (SW) can be used as

backup for fuel pool makeup upon failure of the normal makeup system. This connection is capable of supplying enough water to prevent the uncovering of the spent fuel. By use of the standby SW as makeup, the fuel pool will be cooled by evaporation of the pool water. The residual heat removal (RHR) system can be operated in parallel with the fuel pool cooling system, to remove abnormal heat loads in the fuel pool. See Section 9.1.3 for details.

The reactor building below the refueling floor is designed to be tornado proof. Tornado missiles below this elevation cannot impair the structural integrity of the pool. Missiles which could reach the pool from above are small enough that they could not impair the structural integrity of the pool. Metal siding above the refueling floor blows out during a tornado. All large objects on the refueling floor are secured so that they cannot be carried into the fuel pool. See Section 3.3 and GE Topical Report, APED-5696, Tornado Protection for the Spent Fuel Storage Pool.

Leak detection channels are provided on the concrete sides of the spent fuel storage pool liner. Surveillance of flow indications from these leak channels permits early determination and localization of any leakage.

9.1.2.3.6 Radiological Considerations

9.1.2.3.6.1 Normal Operation. Three sources of exposure to personnel in the area of the spent fuel storage pool are considered:

a. Direct dose from the stored fuel,
b. Dose from the radionuclides in the spent fuel pool water, and
c. Dose from airborne tritium.

Direct dose from the stored fuel is negligible due to the height of water above the storage positions. Calculations indicate a direct dose from stored fuel of less than 1×10^{-5} mrem/hr.

Most of the personnel exposure in the area of the spent fuel storage pool comes from the radionuclide inventory in the water. Estimates of the dose from this source were calculated to be 3.5 mrem/hr during the first refueling, increasing to 6.9 mrem/hr during the eleventh refueling. These calculated values are given in Table 9.1-2.

The dose from airborne tritium is limited by spent fuel storage pool water temperature limitations as described in Section 9.1.3 and by the fuel pool exhaust ventilation described in Section 9.4.2.

9.1.2.3.6.2 Radiological Consequences of Accidents. See Chapter 15.

The storage racks, storage pool and associated equipment, and the reactor building in which the pool is located, are designed to remain functional through and after an SSE.

The impact of heavy objects on the racks has been considered in the design. The reactor building below the refueling floor is tornado proof and tornado missiles that could reach the pool from above this level are small enough that the structural integrity of the pool (and racks therein) could not be impaired. The drop of a spent fuel shipping cask is precluded by redundancy features of the crane and other design features discussed in Section 9.1.2.3.3.

9.1.2.3.7 Conclusions

From the foregoing analyses, it is concluded that the spent fuel storage arrangement and design comply with the objectives in Regulatory Guide 1.13, Revision 1.

9.1.3 SPENT FUEL POOL COOLING AND CLEANUP SYSTEM

9.1.3.1 Design Bases

The FPC system has been designed to comply with the objectives in Regulatory Guides 1.13, Revision 1, and 1.26, Revision 3, to the extent specified in the following subsections. The system and equipment are designed to the classifications given in Tables 3.2-1 and 9.1-3.

During normal reactor operation the system is designed to remove decay heat released from the stored spent fuel elements and maintain a specified fuel pool water temperature, water clarity, and water level by accomplishing the following:

a. Minimizing corrosion product buildup and controlling fuel pool water clarity so that fuel assemblies can be efficiently handled underwater,

b. Minimizing fission product concentration in the fuel pool water thereby minimizing the release of fission products from the pool to the reactor building environment,

c. Monitoring surge tank water level to thereby maintain a pool water level above the fuel sufficient to provide shielding for normal building occupancy and to control makeup flow rate from the condensate transfer system, and

d. Maintaining the fuel pool water temperature below 125°F under normal (nonrefueling) operating conditions. The maximum heat load in the fuel pool occurs during refueling. The magnitude of this heat load will vary for each refueling based on the number of irradiated fuel assemblies moved from the reactor core to the fuel pool, the burnup of each fuel assembly, and the decay time of each fuel assembly.

Additionally, the system also provides cleanup for purity and clarity control to the reactor well, dryer-separator pool, and the suppression pool.

During shutdown conditions, the RHR system may be operated to remove the decay heat load. However, the RHR assist mode may only be credited for spent fuel pool cooling during a full core offload.

In Section 1.3.2 it was indicated that a significant change was made in the fuel pool cooling system between the time of the PSAR and FSAR. The design basis originally relied on fuel pool boiling following a severe seismic event and provided for safety grade makeup from the standby SW system. In the final design, the design basis of the fuel pool cooling portion of the system was changed to Seismic Category I. Following a seismic event or major plant disturbance, the system is designed to prevent fuel pool boiling and maintain adequate water level in the spent fuel pool by means of the following:

a. Automatic isolation on low fuel pool water level of the Seismic Category I cooling portion of the system from the Seismic Category II cleanup portion of the system,

b. Remote-manual startup from the control room of redundant, active components of the fuel pool cooling portion of the system, and initiation of safety grade cooling water from the standby SW system, to the fuel pool cooling heat exchangers,

c. Remote valve operation, from the control room, to initiate SW cooling to the FPC heat exchangers, and

d. Redundant SW system makeup to the fuel pool (see Section 3.1.2.6.2) and fuel pool level monitoring from the control room.

9.1.3.2 System Description

The FPC system must operate in a variety of conditions. During normal reactor operations the FPC provides for cooling and cleaning of the spent fuel pool containing discharged fuel assemblies. During refueling outages, the FPC system may be required to provide additional decay heat removal. The spent fuel pool cooling function can be provided by operating both trains of FPC. The RHR B loop may only be credited for FPC assist during a full core offload. The RHR B loop may be operated, but not credited, to provide supplemental cooling as required. The RHR B loop can be cross connected to the FPC system. In addition, with the reactor cavity flooded and fuel pool gates removed, RHR A or B may be lined up to take suction from the surge tanks and discharge to the RPV.

The FPC system flow diagram is shown in Figures 9.1-6.1 and 9.1-6.2.

System performance data are summarized in Table 9.1-5. Major components of the system are summarized in Table 9.1-3. The system is designed to dissipate the fuel pool heat load during normal operation and refueling conditions.

The FPC system consists of two separate trains, each containing a circulating pump and a heat exchanger. The system also contains two filter demineralizers and two skimmer surge tanks, as well as the required piping, valves, and instrumentation. Except for the pumps, heat exchangers and filter demineralizers, common piping headers are used. The FPC pumps normally circulate the pool water in a closed loop, taking suction from the surge tanks, circulating the water through a heat exchanger and a filter demineralizer, and discharging it through the diffusers at the bottom of the fuel pool. During refueling, pool water is discharged through the fuel pool diffusers or through diffusers in the reactor well. The water flows from the pool surface through skimmer weirs to the surge tanks. Makeup water for the system is normally transferred from the condensate storage tank to a skimmer surge tank to make up pool water losses. The fuel pool pumps and heat exchangers are located in an enclosed room on the 548-ft level of the reactor building beneath the fuel pool.

Instrumentation is provided for both automatic and remote manual operation. Indication is provided in the control room. Surge tank high and low water level switches are provided. Control of flow to or from the reactor well can be accomplished during refueling. A fuel pool high/low water level switch sounds an alarm in the control room whenever the level is either too high or too low. The alarm points are fixed at the bottom of the weirs (low) and 1-1/8 in. above the normal water level (high).

The pumps are controlled from instrument racks on the 522 ft el. and the control room. Pump low suction pressure automatically shuts down the operating pump(s). A pump low discharge pressure alarm annunciates in the control room and starts the standby pump.

A high rate of leakage through the reactor drywell refueling bellows assembly, drywell to reactor well seal, or the fuel pool gates is indicated locally and is alarmed in the control room.

Failure of the reactor closed cooling water system (RCC), RHR, or a loss of inventory, are addressed in procedures. The FPC system operation and RHR/FPC assist modes of operation are each discussed in the following sections in more detail.

9.1.3.2.1 System Operation

9.1.3.2.1.1 FPC System Cooling Function

The system normally cools the fuel pool by transferring the spent fuel decay heat from the tube side of the two fuel pool cooling heat exchangers to the RCC. Standby SW can be manually aligned as the alternate heat sink for the heat exchangers (see Section 9.1.3.2.3 for additional

details). The fuel pool is maintained at or below 125°F during normal plant operations. The fuel pool temperature may rise above this value during refueling activities or during an anticipated operational transient of the loss of one train of the FPC system. The RHR system can also be manually aligned into several configurations to provide supplemental cooling of the fuel pool. One of these RHR configurations is the RHR/FPC assist mode of RHR (see Section 9.1.3.2.2 for additional details).

The maximum heat load is present in the spent fuel pool during refueling activities when recently irradiated fuel bundles are discharged from the reactor core to the fuel pool. The magnitude of this heat load is contingent upon the cycle-specific refueling activities, i.e., the number of the bundles discharged, the burnup of the discharged bundles, and the decay time of each bundle when it is placed in the fuel pool. The heat load associated with a planned discharge can be calculated with the ORIGEN-ARP computer code assuming a .34% thermal power uncertainty or other acceptable means to account for code bias and uncertainties. During refueling activities, the fuel pool temperature is managed by controlling the number and schedule of fuel assemblies discharged, controlling the number of heat removal systems in service, and controlling the temperatures of the systems (RCC or SW) used to remove the heat from the FPC heat exchangers.

The fuel pool cooling system was originally designed to maintain the pool at a temperature of less than or equal to 125°F during refueling activities with both trains of fuel pool cooling in operation and RCC cooling water at 95°F. The decay heat load assumed for the original design basis (normal offload) was based on the original licensed power of 3323 MW-thermal, a one-year fuel cycle, and a quarter core offload with a 20-day decay period.

Since the original design, the licensed power was increased to 3544 MW-thermal and the operating cycle was revised from a one-year cycle to a two-year cycle. These changes resulted in an increased heat load in the fuel pool, particularly during refueling outages. For the current design (3544 MW-thermal and a two-year cycle), a 150°F fuel pool temperature limit (see Table 9.1-6) applies to normal refueling activities for the scenario of both trains of fuel pool cooling in operation.

The FPC system is also designed to provide sufficient cooling for an anticipated operational transient of the loss of one train of the FPC system. For this transient, the maximum bulk fuel pool water temperature is limited to 175°F. This limit applies to both normal operation and normal refueling activities (i.e., excluding a full core offload).

The system's ability to satisfy these temperature limits could be challenged based on outage-specific plans or activities. Outage-specific calculations are performed, as needed, to ensure acceptance criteria limits are maintained and adequate decay heat removal capability exists. Management of the rate and magnitude of the heat load added to the fuel pool during refueling activities and the temperature of the credited heat sink (i.e., RCC or SW) are considered.

Energy Northwest does not routinely perform full core offloads at Columbia and as such, a full core offload is considered a non-routine evolution. If performing a full core offload, supplemental RHR cooling (RHR/FPC assist mode) is required to maintain fuel pool temperatures below 145°F. The limit for this scenario is 175°F. A single failure scenario involving the loss of one train of the FPC is not postulated for a full core offload. This exemption from a single failure is reasonable based on the expected infrequent performance of a full core offload.

During normal plant operations, the heat load in the fuel pool will be less than the heat load experienced during refueling activities. There are three fundamental operational scenarios considered in the design and licensing basis of the FPC. These scenarios are: 1) normal operations with both FPC trains available; 2) normal operations with an anticipated operational transient of the loss of one train of the FPC system; and 3) a design basis LOCA condition. The fuel pool temperature limits for each of these scenarios are presented in Table 9.1-6.

The FPC system is not credited for mitigating the consequences of a design basis event. For a postulated LOOP/LOCA event, RCC will be lost (automatically load sheds in response to an F or A signal) and one train of the FPC system is lost as the result of an assumed single failure. Standby SW can be manually aligned from the control room to replace the lost RCC. Prior to the postulated LOCA, the SW is maintained at a temperature of less than or equal to 77°F in accordance with the Technical Specifications. During the mitigation of the design basis LOCA, the SW will rise to approximately 90°F. The heat up of the fuel pool following a design basis LOCA has been evaluated using a heat load of approximately 10.1 MBTUs/hr and the peak temperature is within the acceptance criteria of 175°F. This temperature is consistent with the design limits of the FPC system.

9.1.3.2.1.2 FPC System Clean-Up Functions

Water purity and clarity in the storage pool, reactor well, and dryer-separator pool are maintained by filtering and demineralizing the pool water through the FPC system filter demineralizers. In addition to fuel pool water demineralization, the system may be used to mix and demineralize the suppression pool water. The suppression pool cleanup portion of the FPC may also be used to periodically let down suppression pool water inventory.

To establish a circulating pattern of flow in the reactor well and fuel storage pool, the diffusers and skimmer drains are placed to sweep particles dislodged during refueling operations away from the work area and out of the pool.

Particulate material is removed from the water by the pressure precoat filter demineralizer units. The finely divided disposable filter medium is replaced when the pressure drop is excessive or the ion exchange resin is depleted. The spent filter medium is backwashed to the waste sludge phase separator tank for processing in the solid radwaste handling system. New filter medium is mixed in a precoat tank and is transferred as a slurry by a precoat pump where

the solids deposit on the filter elements. The holding pump connected to each filter demineralizer maintains circulation through the filter in the interval between the precoating operation and the return to normal system operation. A strainer is provided in the effluent stream of the filter demineralizers to limit the migration of the filter material.

The two filter demineralizer units are located separately in shielded cells in the radwaste building. Sufficient clearance is provided in the cells to permit removal of the filter elements from the vessels. Each cell contains only the filter demineralizer and its associated piping. All valves are located on the outside of one shielding wall of the cell, together with necessary piping and headers, instrument elements, and controls. The FPC cleaning portion of the system is controlled from the radwaste control room.

The flow rate through the filter demineralizers is given by a flow indicator in the radwaste control room located on the demineralizer control panel.

Differential pressure and conductivity instrumentation is provided for each unit to indicate when backwash is required. Suitable alarms, differential pressure indicators, and flow indicators are provided to monitor the condition of the filter demineralizers.

There are two sampling points: SP-25A&B, at the effluent from the fuel pool filter demineralizers, FPC-DM-1A&B. There are also sample points: SP-69, at the fuel pool return line, and SP-24, at common inlet header to the demineralizers. All four sample points are piped to the sample room. All four sample points continuously transmit conductivity measurements to a 4-point recorder and also provide grab samples at the nearby associated fume hood.

Weekly fuel pool analyses is performed to ensure that the water quality specifications for the fuel pool are maintained. The water quality parameters are as follows:

Conductivity	3 µS/cm at 25°C
Chloride	0.5 ppm
pH	5.3-7.5 at 25°C
Total insolubles	1 ppm
Heavy metals	0.1 ppm

Weekly gamma analyses are performed following fuel load or when irradiated fuel is stored in the pool. Special tests on iodine or other significant radionuclide removal by the fuel pool filter demineralizers will be performed when gross gamma activity levels in the fuel pool exceed 10^{-3} mCi/cm^3 during normal power operation.

Continuous influent and effluent conductivity for the fuel pool demineralizers are monitored and recorded. A high conductivity effluent alarm setpoint of 1.5 µS/cm is chosen to reflect marginal performance of the demineralizer since they will eventually saturate with air saturated

water at an equilibrium level of about 1.1 μS/cm. Differential pressure drop is continuously monitored across the filter demineralizers and at a pressure alarm setpoint of 10.5 psid, the units are removed from service and re-precoated with a combined filtration/ion exchange media.

9.1.3.2.2 Residual Heat Removal/Fuel Pool Cooling Cleanup Assist Mode Operation

As discussed in Section 9.1.3.2.1, the RHR loop B may be operated to assist the FPC system, however, the RHR system may only be credited for the decay heat removal function during a full core offload.

The cross connect between RHR and FPC is provided by two flanged spool pieces. The installation and removal of the spool pieces is administratively controlled. However, design evaluation of the system found it acceptable to leave them permanently installed. Procedures direct initiation and operation of the RHR/FPC assist mode and provide guidance to mitigate the consequences in the event of the loss of this mode.

The supplementary cooling provided by RHR/FPC assist is not required the majority of the time. The separation of the two systems is maintained by system operating procedures and administrative controls on the valves needed to isolate the spool pieces. The two valves on the discharge side of RHR-P-2B (RHR-V-104 and FPC-V-119) are maintained as locked closed valves. The suction side isolation is provided by the locked closed FPC-V-141 and RHR-V-261 and locked open FPC-V-101 and the check valve, RHR-V-105. The initiation of the RHR/FPC assist mode is not a routine evolution. The installation, testing, and operation of this mode will require an evaluation of plant conditions and requirements. While operating in RHR/FPC assist mode, the RHR B loop will not be able to provide the low-pressure coolant injection (LPCI), shutdown cooling (SDC), or containment spray functions without local manual operations.

While in RHR/FPC assist, RHR and FPC take a suction on the skimmer surge tanks. Water directed to RHR B loop is cooled by SW and the FPC system provides for cleaning of the fuel pool water. As in normal FPC operation, the water is directed to the surge tank by skimmers near the top of the spent fuel pool. The cooled and cleaned water is returned to the pool through the 8-in. diffusers normally used by the FPC system. To limit RHR flow rates while operating in FPC assist, two restricting orifices are installed in the FPC system. While in the FPC assist mode, an optional, additional return path for the RHR B discharge is into the reactor cavity through the line normally providing RPV head spray (Section 5.4.7.2.1). During refueling outage conditions the head spray line is disconnected at a flange in the cavity and removed with the reactor head insulation package. Normally this flange is then blanked off. However, for the additional cooling, the blank can be left off providing the additional flow path of RHR to the cavity, with a rate of up to 1000 gpm.

9.1.3.2.3 Fuel Pool Cooling System Operation Following a Seismic Event or Major Plant Disturbance

The portion of the FPC system that is required for cooling the fuel pool is located within the reactor building and is designed to Seismic Category I criteria. The portion of the FPC system which is used for fuel pool cleanup is located within the radwaste building and is isolable from the reactor building by means of two Seismic Category I isolation valves per line located within the reactor building. The isolation valves are either check valves or motor-operated gate valves. The motor-operated valves close automatically on a fuel pool low water level condition.

The redundant, active components required for fuel pool cooling are powered from Division 1 and 2 power sources. Following a loss of offsite power, these components can be energized from onsite emergency power. On a loss of RCC to the fuel pool heat exchangers, the RCC supply lines to the heat exchangers can be isolated by redundant Seismic Category I motor-operated gate and check valves and the return lines by redundant Seismic Category I motor-operated gate valves. Standby SW can be supplied to the heat exchangers through motor-operated valves which are normally key locked closed. Radiation detectors are located on the SW return lines. The SW system can also be used to mitigate inventory reduction.

To preclude leakage of service water into the spent fuel pool during operation of the SW system or leakage of fuel pool cooling water into the SW system when the SW system is not operating, the manual valves (SW-V-75AA and SW-V-75BB) and the motor-operated valves (SW-V-75A and SW-V-75B) are kept normally closed when spent fuel pool temperatures are below 138°F. If during normal plant operations the spent fuel pool temperature rises above 138°F, the manual valves will be maintained open. The manual valves are located on the west side of the 522-ft el. of the reactor building and are accessible and can be opened if necessary following a LOCA prior to spent fuel pool temperatures exceeding 175°F. The access route to these manual valves is shown in Appendix J. Once the manual valve(s) are opened, spent fuel pool level can be maintained using the remote-manual valves from the main control room.

Operation and monitoring of fuel pool cooling portion of the FPC system can be done entirely from the control room.

All components required for fuel pool cooling are qualified to the reactor building accident environment. The fuel pool equipment room located on the 548 ft el. is provided with redundant Seismic Category I room coolers with one each on Division 1 and 2 power sources.

9.1.3.3 Safety Evaluation

The maximum heat load is the decay heat of one full core load of the fuel plus the remaining decay heat of previously discharged fuel assemblies. The RHR B loop is operated in parallel with the FPC system during this condition or other events which require supplemental cooling.

To permit this use of the RHR system, normally locked closed valves interconnecting the RHR system to the FPC system are opened after verification of the installation of the flanged spool pieces. A full core offload is a non-routine evolution. A single failure is not postulated to occur during this evolution and credit for RHR/FPC assist is allowed. During this evolution, sufficient cooling should be provided to maintain the fuel pool temperature at less than 145°F. The licensing basis limit is 175°F.

The fuel pool heat exchangers are normally cooled by the RCC system to contain released radioactivity in the event of a fuel pool heat exchanger tube failure. During normal operations, the system maintains the fuel pool water temperature below 125°F when removing the nominal heat load from the fuel pool. During normal refueling outage conditions, the system is evaluated to ensure it has the capability to maintain the fuel pool water temperature below 150°F. This limit applies to core offloads up to, but not including a full core offload, and is based on the assumption of 2 FPC trains in service. The system maintains fuel pool water temperature below 175°F in the event that only one pump and one heat exchanger are available. Depending on the heat load in the pool during refueling activities, RCC or SW temperature is controlled to ensure the FPC system can perform its design functions within the acceptance criteria shown in Table 9.1-6.

Following a seismic event or major plant disturbance the SW system is available to cool the fuel pool (by means of FPC or RHR-B heat exchangers) to preclude boiling of the fuel pool water. The SW pressure is higher than the fuel pool pressure; thus, any leakage will be into the fuel pool system. In addition, radiation monitors of the SW return line detect any gross failure in the heat exchangers.

The fuel pool design precludes any condition which could allow the fuel pool to be drained below the pool gate between the reactor well and the fuel pool. Two diffusers are placed in both the reactor well and the fuel pool to distribute cooled return water efficiently. Diffusers are placed to minimize stratification of either temperature or contamination. Valving is provided to prevent water from being siphoned out of the pool. All piping connected to the fuel pool and reactor well, except for drains and liner drains, are Seismic Category I, including any normally closed manual or normally open automatic valves that provide isolation from the Seismic Category II portion of the system. Drain and liner drain piping connected to the fuel pool, reactor well, and dryer separator pool are Seismic Category II supported to Seismic Category I requirements. Since the fuel pool system is at low temperature and pressure (moderate energy system) postulated breaks in the Seismic Category I portion are limited to cracks.

Fuel pool cooling can be established and monitored from the control room following a design basis LOCA. One of the two FPC trains is adequate to prevent fuel pool boiling by a large margin. However, during normal plant operation, one or both trains operate to maintain 125°F pool water. Should one of the trains be unavailable, the second train operates to maintain pool water temperature below 175°F. The 175°F value is applicable for an

anticipated operational transient involving the loss of one FPC loop. If the fuel pool heat load is such that the resulting temperature transient exceeds 125°F, procedural guidance is in place to restore the fuel pool temperature to < 125°F. Due to the large thermal capacity of the fuel pool sufficient operator time is available for the operator to take necessary corrective action to supplement cooling.

A makeup water valve controlled by skimmer surge tank level switches supplies water from the condensate transfer system to the fuel pool to replace losses. The backup source of makeup water is from the Seismic Category I, safety class 3 SW system. This source supplies makeup for long-term pool water losses.

Each filter demineralizer is capable of continuous operation at a normal fuel pool water flow rate of 575 gpm or a maximum fuel pool water flow rate of 1100 gpm and will maintain water conditions as specified in Section 9.1.3.2.

A radiological evaluation of the cleanup system is presented in Chapter 12.

From the foregoing analysis, it is concluded that the FPC system meets its design basis and satisfies the requirements of Regulatory Guide 1.13, Revision 1.

9.1.3.4 Testing and Inspection Requirements

Special testing is not required for the system except as noted below because, when fuel is stored in the pool, at least one pump, heat exchanger, and filter demineralizer are routinely in operation.

Routine, periodic visual inspection of system components, instrumentation, and alarms are adequate to verify system operability. Likewise, the interconnecting valves between the FPC system and the RCC, SW, and RHR systems are periodically inspected to verify their operability.

9.1.4 FUEL HANDLING SYSTEM

9.1.4.1 Design Bases

The fuel handling system is designed to provide a safe and effective means for transporting and handling fuel from the time it reaches the plant until it leaves the plant after postirradiation cooling. Safe handling of fuel includes design considerations for maintaining occupational radiation exposures as low as reasonably achievable during transportation and handling.

Design classification criteria for major fuel handling system equipment is provided in Table 3.2-1 which lists the safety class, quality class, quality group, and seismic category for the equipment.

The cask storage area in the spent fuel pool and the cask handling facilities are designed to accommodate a spent fuel cask of 125 tons. The reactor building crane is designed to transport the spent fuel cask between the cask receiving area, the cask storage area in the spent fuel pool, and the cask washdown area without inducing a permanent deformation of any crane element. Adequate safety features are designed into the reactor building crane system and controls to ensure that no credible postulated failure of any crane component will result in the dropping of the fuel cask.

The transfer of new fuel assemblies between the uncrating area and the new fuel inspection stand and/or the new fuel storage vault is accomplished using the jib crane or the reactor building crane auxiliary hoist.

The refueling floor jib cranes are used to transfer new fuel from the new fuel vault to the fuel storage pool. From this point on, the fuel will be handled by the telescoping grapple on the refueling platform.

The refueling platform is General Class G and Seismic Category 1M from a structural standpoint in accordance with 10 CFR Part 50, Appendixes A and B. Allowable stress due to SSE loading is 120% of yield or 70% of ultimate, whichever is less. A dynamic analysis is performed on the structures using the response spectrum method with load contributions resulting from each of three components earthquake motion being combined by the RMS procedure.

Working loads of the platform structures are in accordance with the AISC Manual of Steel Construction. All parts of the hoist systems are designed to have a safety factor of five, based on the ultimate strength of the material. A redundant load path is incorporated in the fuel hoists so that no single component failure could result in a fuel bundle drop. Maximum deflection limitations are imposed on the main structures to maintain relative stiffness of the platform. Welding of the platform is in accordance with AWS D14-1. Gears and bearings meet AGMA Gear Classification Manual and ANSI B3.5. Materials used in construction of load bearing members are to ASTM specifications. For personnel safety, OSHA Part 1910-179 is applied. Electrical equipment and controls meet ANSI-ANS C1, National Electric Code, and NEMA Publications No. IC1 and MG1.

The general purpose grapples and the main telescoping fuel grapples have redundant hooks. The main telescoping fuel grapple has an indicator which confirms positive grapple engagement.

The fuel grapple is used for lifting and transporting fuel bundles. It is designed as a telescoping grapple that can extend to the proper work level and in its fully retracted state still maintains adequate water shielding over fuel.

In addition to redundant electrical interlocks to preclude the possibility of raising radioactive material out of the water, the cables on the auxiliary hoists incorporate an adjustable, removal stop that will jam the hoist cable against the platform structure to prevent hoisting when the free end of the cable is at a preset distance below water level.

Sufficient redundancy is provided in the reactor building crane such that no credible postulated failure of any crane component will result in dropping of the fuel cask and rupturing the fuel storage pool. Furthermore, limitation of the travel of the crane handling the cask will preclude transporting the cask over any fuel storage rack. See Chapter 15 for accident considerations.

9.1.4.2 System Description

Table 9.1-7 is a listing of typical tools and servicing equipment supplied with the nuclear system. The following paragraphs describe the use of some of the major tools and servicing equipment and address safety aspects of the design, where applicable.

9.1.4.2.1 Spent Fuel Cask

The designs of cask storage and dry cask handling facilities are based on a design cask weighing approximately 125 tons and being approximately 17 ft long by 8 ft in diameter.

The following description of the spent fuel cask is based on the licensed Holtec HI-STORM 100 System. That system includes a canister that contains the fuel and a transfer cask that contains the canister. The canister confines the fuel. The transfer cask provides shielding and structural protection of the canister during canister loading or movement.

Overland offsite transportation of the cask will conform to transportation rules and regulations, 49 CFR Part 173.

9.1.4.2.2 Reactor Building Crane

9.1.4.2.2.1 Description. The main purpose of the reactor building crane is to handle the spent fuel cask between the cask receiving area, the cask loading area in the spent fuel pool, and the cask decontamination washdown area. Secondary purposes of the crane include servicing and refueling the reactor pressure vessel, and handling of equipment or parts thereof received or shipped through the loading facility in the reactor building.

The reactor building crane is a single-trolley top-running electric overhead traveling crane with a 125-ton capacity main hoist, and a span of approximately 126 ft. The general arrangement

of the crane in the reactor building is shown in Figures 1.2-11 and 1.2-12. The crane is Class A1 as defined for nuclear fuel handling by the Crane Manufacturers Association of America Specification No. 70 for Electric Overhead Traveling Cranes, (CMAA No. 70). The reactor building crane is designed, fabricated, installed, and tested in accordance with ANSI Standard B30.2, Safety Code for Cranes, Derricks and Hoists, and CMAA Specification No. 70. The crane is Seismic Category I.

Operation of the reactor building crane is from the cab or from the floor by radio control. The crane radio control system uses crystals highly tuned to a narrow frequency band, thereby precluding interferences from other signaling systems. Control at any one time is from one point only.

The structure of the crane bridge consists of welded box type girders with truck saddles and truck frames of welded-steel construction. The trolley side frames, sheave frames, and truck frames are of structural steel-welded construction.

The rated full-load capacities, lifts, and full-load speeds are as follows:

Main Hook

Rated full-load capacity, tons	125
Hook travel, ft	190 ft 0 in.
Hoisting speed, fpm at full load	5.5

Auxiliary Hook

Rated full-load capacity, tons	15
Hook travel, ft	199 ft 8 in.
Hoisting speed, fpm at full load	20

Travel Speeds

Trolley, fpm at full load	40
Bridge, fpm at full load	50

The crane is capable of raising, lowering, holding, and transporting a test work load at 125% of rated load without damage to any parts and without inducing a permanent deformation of any crane element.

Structural members not covered by the CMAA Specification No. 70 are designed in accordance with the AISC Specification for the Design, Fabrication, and Erection of Structural Steel for Buildings (September 1972).

All parts of the crane are designed to resist the maximum stresses caused by loading combinations called for in the CMAA Specification No. 70 and for the following loading combinations:

a. Dead load + trolley weight and rated load + SSE, not to exceed 90% of the yield strength,

b. Dead load + weight of unloaded trolley + tornado loading, not to exceed 90% of the yield strength, and

c. Rated breakdown torque of the motors, not to exceed allowable stresses.

The lateral loads on the crane runway, in the normal operating condition, are taken as 10% of the sum of the weights of the hook load and the crane trolley, plus the seismic load of the crane dead load, acting simultaneously at the top of each rail in either direction normal to the runway rails.

Safety factors for the main hoist cables are discussed in Section 9.1.4.2.2.2. The main hook and auxiliary hook are capable of sustaining the full-rated load with a design safety factor of five.

9.1.4.2.2.2 Safety Features. The single hoist motor drives two separate shafts. The motor has two centrifugally tripped limit switches, one outboard of each hoist input pinion at each end of the motor shaft assembly. These provide an automatic safety shutdown and protection from any control or motor malfunction which might result in a runaway condition of the load. Each motor driven shaft passes through a 150% capacity solenoid-actuated brake. A failure of either the motor shaft, the connecting shafts, or the shaft couplings would not result in a load drop since the redundant dual solenoid actuated brakes would be effective in holding the load. On loss of power to the motor, both brakes engage. They can also be engaged by the operator. Additionally, there is a 90% capacity eddy current brake to limit the rate of load lowering.

After the brake, each motor shaft enters its own gear reducer. If a component of one gear case (gear teeth, shafts, bearings, or structural component) should fail, the other gear reducer will hold the load with its brake. The brake is designed with a safety factor of five.

Each gear case is fitted on its output end with a pinion meshing with the drum gear. A failure of a pinion, drum gear, pinion shaft, or pinion bearing will result in the load being carried by the other similar set of parts on the other end of the drum. Each functioning part is designed with a safety factor of five. In each of the main hoist gear cases, there is a mechanical load brake with cooling of the gear case oil to offer additional safety in loading handling.

In the event of failure of the drum shaft, drum bearing, or drum bearing bracket, the drum flange will drop a fraction of an inch onto structural seats so located that the drum is

supported. The remaining pinion and gear will stay in mesh to restrain the load. Again, a safety factor of five is incorporated into the design of these parts.

Two separate wire ropes are led from the main hoist drum, each being reeved through a set of sheaves, upper and lower (block sheaves), and back to an equalizer bar arranged for equal division of the load between the two ropes. The individual wire rope safety factors for maximum static load and static plus inertia load (dynamic) are 9.7 and 9.0 respectively. The equalizer bar is fitted with double acting springs to minimize the shock when the entire load is transferred to one rope. Therefore, load drop is precluded. To protect against overloading of the cables and to provide indication of load balancing, a load sensing system consisting of tension type load cells is installed in each of the hoist cables at its connection to the equalizer bar assembly under the trolley.

All sheaves, both upper and block sheaves, are contained in heavy structural casings which usually carry a negligible load. In the event of a sheave pin failure, the sheaves would rise to the top of the block or drop to the base of the upper sheave housing and stop at those points. Thus a load drop is precluded. The block assembly contains two 100% capacity load carrying devices consisting of a sister hook and an eye hook. This redundancy, in attachment to lifting assembly and in load carrying capability, is such that a single failure will not cause load drop. Additional non-destructive examination (NDE) (ultrasonic and magnaflux testing for the load block swivel and the sheave shafts of the upper assembly) provide further assurance that this crane is of a quality suitable for nuclear services. Sufficient electrical circuitry is provided such that no single credible electrical component failure will cause the load to drop.

To preclude any dislodgement of the crane bridge girder and trolley system during seismic or tornado excitation, the following is provided:

a. From the bridge trucks, lugs or brackets are attached to the truck frame to limit total crane drop to 1 in. or less should a wheel or axle break, and

b. The trolley is provided with latches to engage racks attached to the bridge girder; the bridge trucks are provided with latches to engage racks attached to the crane runway girders. The latches and racks ensure that the trolley is rigidly attached to the crane runway girders. These provisions are used when the crane is not operational.

9.1.4.2.3 Fuel Servicing Equipment

The major fuel servicing equipment described below has been designed in accordance with the classification criteria listed in Table 3.2-1.

9.1.4.2.3.1 Fuel Preparation Machine. The fuel preparation machine, Figure 9.1-7, is mounted on the wall of the fuel storage pool and is used for stripping reusable channels from

the spent fuel and for rechanneling of the new fuel. The machine is also used with the fuel inspection fixture to provide an underwater inspection capability, and with the defective fuel storage container to contain a defective fuel assembly for stripping of the channel.

The fuel preparation machine consists of a work platform, a frame, and a movable carriage. The frame and movable carriage are located below the normal water level in the fuel storage pool, thus providing a water shield for the fuel assemblies being handled. The fuel preparation machine carriage has an up-travel-stop to prevent raising fuel above the safe water shield level. The movable carriage is operated by a foot pedal controlled air hoist.

9.1.4.2.3.2 New Fuel Inspection Stand. The new fuel inspection stand, Figure 9.1-8, serves as a support for the new fuel bundles undergoing receiving inspection and provides a working platform for technicians engaged in performing the inspection.

The new fuel inspection stand consists of a vertical guide column, a lift unit to position the work platform at any desired level, bearing seats and upper clamps to hold the fuel bundles in position.

9.1.4.2.3.3 Channel Bolt Wrench. The channel bolt wrench, Figure 9.1-9, is a manually operated device approximately 12 ft in overall length. The wrench is used for removing and installing the channel fastener assembly while the fuel assembly is held in the fuel preparation machine.

The channel bolt wrench has a socket which mates and captures the channel fastener capscrew.

9.1.4.2.3.4 Channel Handling Tool. The channel handling tool, Figure 9.1-10, is used in conjunction with the fuel preparation machine to remove, install, and transport box fuel channels in the fuel storage pool.

The tool is composed of a handling bail, a lock/release knob, extension shaft, angle guides, and clamp arms which engage the fuel channel. The clamps are actuated (extended or retracted) by manually rotating lock/release knob.

The channel handling tool is suspended by its bail from a spring balancer on the channel handling boom located on the fuel pool periphery.

Similar tooling is provided as appropriate by the current reload fuel vendor.

9.1.4.2.3.5 Fuel Pool Sipper. The originally supplied equipment is not used. Any fuel sipping is performed by the refueling vendor using their own equipment and procedures. Fuel sipping heads, panels, and containers are separate pieces of equipment used for out-of-core wet sipping at any time. They are used to isolate a fuel bundle while circulating water through the

fuel bundle in a closed system. The containers cannot be used for transporting a fuel bundle. The bail on the container head is designed not to fit into any of the grapples.

9.1.4.2.3.6 Fuel Inspection Fixture. The fuel inspection fixture, Figure 9.1-11, is used in conjunction with the fuel preparation machine to permit remote inspection of fuel elements. The fixture consists of two parts: (1) a lower bearing assembly, and (2) a guide assembly at the upper end of the carriage. The fuel inspection fixture permits the rotation of the fuel assembly in the carriage, and, in conjunction with the vertical movement of the carriage, provides complete access for inspection.

9.1.4.2.3.7 Channel Gauging Fixture. The originally supplied equipment is not used. Any channel gauging is performed by the refueling vendor using their own equipment and procedures.

9.1.4.2.3.8 General Purpose Grapple. The general purpose grapple, Figure 9.1-12, is a handling tool used generally with the fuel. The grapple can be attached to the jib crane and the auxiliary hoists on the refueling platforms. The general purpose grapple or other rigging controlled by plant procedures may be used to remove new fuel from the fuel container, place it in the inspection stand or vault, and transfer it to the fuel pool. It can be used to handle new fuel during channeling.

9.1.4.2.4 Servicing Aids

General area underwater lights are provided with a suitable reflector for illumination. Suitable light support brackets are furnished to support the lights in the reactor vessel and to allow the light to be positioned over the area being serviced independent of the platform. Local area underwater lights are small diameter lights for additional illumination. Drop lights are used for illumination where needed.

A radiation hardened designed portable underwater closed circuit television camera is provided. The camera may be lowered into the reactor vessel and/or fuel storage pool to assist in the inspection and/or maintenance of these areas. The camera is also equipped with a right angle lens to allow viewing at 90 degrees.

A general purpose, plastic viewing aid is provided to float on the water surface to permit better visibility. The sides of the viewing aid are brightly colored to allow the operator to observe it in the event of filling with water and sinking. A portable, submersible type, underwater vacuum cleaner is provided to assist in removing crud and miscellaneous particulate matter from the pool floors, or the reactor vessel. The pump and the filter unit are completely submersible for extended periods. The filter “package” is capable of being remotely changed, and the filters will fit into a standard shipping container for offsite burial. Fuel pool tool accessories are also provided to meet servicing requirements.

9.1.4.2.5 Reactor Vessel Servicing Equipment

The following is a description of the equipment designs.

9.1.4.2.5.1 Reactor Vessel Service Tools. These tools are used when the reactor is shut down and the reactor vessel head is being removed or reinstalled. Tools in this group are

a. Stud handling tool,
b. Stud wrench,
c. Nut runner,
d. Stud thread protectors,
e. Thread protector mandrel,
f. Bushing wrench,
g. Seal surface protector,
h. Stud elongation measuring rods, and
i. Head guide cap.

These tools are designed for a specified environment. Lifting tools are designed for a safety factor of five or better with respect to the ultimate strength of the material used. When carbon steel is used, it is either hard chrome plated, parkerized, or coated with an acceptable paint.

9.1.4.2.5.2 Steam Line Plug. The steam line plugs are used during reactor refueling or servicing; they are inserted in the steam outlet nozzles from inside of the reactor vessel to prevent a flow of water from the reactor well into the main steam lines during servicing of safety/relief valves, main steam isolation valves, or other components of the main steam lines. (The reactor water level is raised to the refueling level during servicing.)

The steam line plug design provides two seals of different types. Each one is independently capable of holding full head pressure. The equipment is constructed of noncorrosive materials. All calculated safety factors are five or greater.

9.1.4.2.5.3 Shroud Head Bolt Wrench. This is a hand held tool for operation of shroud head bolts. It is made of aluminum to be easy to handle and to resist corrosion. Testing has been performed to confirm the design.

9.1.4.2.5.4 Head Holding Pedestal. Three pedestals are provided for mounting the reactor vessel head on the refueling floor. The pedestals have studs which engage three evenly spaced stud holes in the head flange. The flange surface rests on replaceable wear pads made of aluminum. When resting on the pedestals, the head flange is approximately 3 ft above the floor to allow access to the seal surface for inspection and O-ring replacement.

The pedestal structure is a carbon steel weldment, coated with an approved paint. It has a base with bolt holes for mounting it to the concrete floor. The structure is designed in accordance with "The Manual of Steel Construction" by AISC.

9.1.4.2.5.5 Head Nut and Washer Racks. The RPV head nut and washer racks are used for transporting and storing up to six nuts and washers. The rack is a box-shaped aluminum structure with dividers to provide individual compartments for each nut and washer. Each corner has a lug and shackle for attaching a four-leg lifting sling.

The racks are designed in accordance with the "Aluminum Construction Manual" by the Aluminum Associations and for a safety factor of five.

9.1.4.2.5.6 Head Stud Racks. The head stud racks are used for transporting and storage of up to six reactor pressure vessel studs. They are suspended from the auxiliary building crane hook when lifting studs from the reactor well to the operating floor.

The racks are made of aluminum to resist corrosion.

9.1.4.2.5.7 Dryer and Separator Slings. The dryer and separator slings are lifting device assemblies used for transporting the steam dryer or the steam separator between the reactor vessel and the equipment pool. Each sling assembly consists of a cruciform shaped structure which has been designed such that one hook pin and one main beam of the cruciform is capable of carrying the total load and so that no single component failure will cause the load to drop or swing uncontrollably out of an essentially level attitude.

The safety factor of the lifting members is five or better in reference to the ultimate breaking strength of the material. The structure is designed in accordance with "The Manual of Steel Construction" by AISC. The completed assembly is proof tested at 125% or greater of rated load and all structural welds are magnetic particle inspected after load test.

9.1.4.2.5.8 Head Strongback. The RPV head strongback is used for lifting both the pressure vessel head and the drywell head. It is a cruciform shape with four equally spaced lifting points on the ends of the arms. In the center it has a hook box which engages with two pins to the reactor service crane sister hook and one pin to the hook lifting eye.

The strongback is designed such that one leg of the cruciform will support the rated load and such that no single component failure will cause the load to drop or swing uncontrollably out of an essentially level attitude. The structure is designed in accordance with "The Manual of

Steel Construction" by AISC. All welding is in accordance with the ASME Boiler and Pressure Vessel (B&PV) Code Section IX. A safety factor of five or greater in reference to the ultimate material strength is used for the design. The completed assembly is proof tested at 125% rated load. After the load test, all structural welds are magnetic particle inspected.

9.1.4.2.5.9 Steam Line Plug Installation Tool. The steam line plug installation tool is suspended from the building crane auxiliary hook or refueling platform monorail or auxiliary hoist for transporting and installing the steam line plugs in the steam line nozzles of the reactor vessel. This tool is designed for a safety factor of five.

9.1.4.2.5.10 Auxiliary Work Platform. The auxiliary work platform provides an alternate work space over the reactor cavity and equipment pool for maintenance work. The platform spans the reactor cavity and travels on the same rails as the refueling platform. The platform is equipped with two jib cranes, two electrically operated jib hoists, three jib crane support pedestals, and is driven by electric motors. To increase accessibility for maintenance work above the cavity, the center floor section of the platform is removable.

Positioning of the platform over the reactor cavity is controlled by administrative procedures.

The auxiliary work platform is designed structurally to meet Seismic Category I requirements. The structural design is in accordance with "The Manual of Steel Construction" by AISC. Materials are in accordance with ASTM Standards. The structure is coated with an approved paint.

The cranes are exempted from the NUREG 0612 requirement because the definition of heavy loads at CGS is 1200 lb. Each 500 lb hoist is equipped with a load limiting device to prevent lifting fuel bundles or unauthorized heavy loads. Interlocks on the platform or hoists are not provided since the hoists and platform are controlled administratively and will not be used for reactivity manipulation.

9.1.4.2.5.11 Cavity In-Vessel Service Platform (CISP). The CISP, Figures 9.1-17 and 9.1-18, serves as a circular H-shaped platform with an inside diameter equal to that of the reactor vessel. The CISP has an opening which may be aligned with the transfer canal (cattle chute). The CISP is used to allow personnel access over the reactor vessel annulus, between the vessel wall and the core shroud, while core alterations are in process using the refueling platform. The CISP can be oriented to allow access to either the spent fuel pool or the dryer-separator pit. The CISP is attached to three support frame legs which rest on the upper cavity shield block ledge. The platform is partially submerged with the walkway floor at a depth of approximately 16 in. when the cavity is flooded up for refueling operations. The CISP also has a 750 lb capacity electric hoist which may be positioned around the inside diameter of the CISP.

The CISP was designed and constructed to Seismic I criteria and all lifting components meet NUREG 0612 requirements for a single failure proof lift. The platform is designed to meet the requirements of the AISC Manual of Steel Construction and the NUREG 0800, Standard Review Plan (SRP) Section 3.8.4. It may be installed in the reactor cavity after the steam separator is removed from the vessel, the cavity is flooded up to normal refueling level and the fuel pool gates are removed. The CISP is removed from the cavity prior to the commencement of vessel restoration.

During movement of the CISP to and from the temporary lay-down area (north of the spent fuel pool), a small portion of the CISP must pass over the spent fuel pool in order to clear the stack monitoring equipment along the center of the refueling floor north wall. The lifting of the CISP is accomplished by the single failure proof reactor building crane, and with NUREG 0612 compliant rigging and handling equipment. Therefore drop of the CISP into the spent fuel pool is not a credible accident. In addition the distance that the CISP can extend over the spent fuel pool is administratively controlled such that only a small portion of the CISP passes over the spent fuel pool and the center of gravity of the CISP is at least 7.5 ft north of the spent fuel pool north curb.

9.1.4.2.5.12 Head Stud Tensioner Carousel/Strongback. The RPV head stud tensioner carousel/strongback is a lifting device that provides an alternate means to remove and install the RPV head. It combines the functions of the original stud tensioner handling frame, RPV head lifting strongback, and head nut and washer racks. The design allows the carousel/strongback to be released from the reactor building crane once it has been mounted onto the four lifting lugs of the RPV head. The head stud tensioners, which ride on the carousel/strongback's integral monorail, are positioned to effect head stud nut removal and reinstallation. The nuts and washers for all 76 of the RPV head studs can be stowed on the carousel/strongback's head stud nut storage ring. The RPV head, head stud nuts and washers, and carousel/strongback (with the RPV head attached) are together lifted by the reactor building crane.

The head stud tensioner carousel/strongback was designed, fabricated, and tested to meet the requirements of NUREG-0612, "Control of Heavy Loads at Nuclear Power Plants" and the guidelines of ANSI N14.6, "American National Standard for Special Lifting Devices for Shipping Containers Weighing 10,000 Pounds (4500 kg) or More for Nuclear Materials."

9.1.4.2.6 In-Vessel Servicing Equipment

The instrument strongback attached to the reactor building crane auxiliary hoist is used for servicing neutron monitor dry tubes should they require replacement. The strongback initially supports the dry tubes into the vessel. The in-core dry tube is then decoupled from the strongback and is guided into place while being supported by the instrument handling tool. Final in-core insertion is accomplished from below the reactor vessel. The instrument handling tool is attached to the refueling platform monorail hoist and is used for removing and

installing fixed in-core dry tubes as well as handling neutrons source holders and the source range monitor/intermediate range monitor dry tubes.

Each in-core instrumentation guide tube seals by metal-to-metal contact with the guide tube flange seal. In the event that the seal needs replacing, an in-core guide tube seal tool is provided. The tool is inserted into an empty guide tube and sits on the beveled guide tube entry in the vessel. When the drain on the water seal cap is opened, hydrostatic pressure seats the tool. The flange can then be removed for seal replacement.

The auxiliary hoists on the refueling platform are used with appropriate grapples to handle control rods, fuel support pieces, double blade guides, flux monitor dry tubes, sources, and other internals of the reactor. Interlocks on the fuel grapple hoist and both auxiliary hoists are provided for safety purposes; the refueling interlocks are described and evaluated in Section 7.7.1.13.

The Westinghouse Multi-Lift Tool (MLT) is used exclusively with the Monorail Auxiliary Hoist. The MLT is used to remove and replace a control rod blade with its associated fuel support piece and double blade guide. The MLT may also be used for uncoupling the control rod drive mechanism from the control rod blade to be removed. The monorail hoist backup emergency stop block position is procedurally controlled to accommodate the length of the MLT and grappled components.

9.1.4.2.7 Refueling Equipment

Fuel movement and reactor servicing operations are performed from a platform which spans the refueling, servicing, and storage cavities.

9.1.4.2.7.1 Refueling Platform. The refueling platform is a gantry crane that is used to transport fuel and reactor components to and from pool storage and the reactor vessel. The platform spans the fuel storage and vessel pools on rails bedded in the refueling floor. A telescoping mast and grapple suspended from a trolley system is used to transport and orient fuel bundles for core, storage rack, or spent fuel cask placement. Control of the platform is from an operator station on the main trolley with a position indicating system provided to position the grapple over core locations. The platform control system includes interlocks to verify hook engagement and grapple load, prevent unsafe operation over the vessel during control rod movements, and limit vertical travel of the grapple. Two 1000-lb capacity auxiliary hoists, one main trolley mounted and one auxiliary trolley mounted, are provided for servicing such as local power range monitor (LPRM) replacement, fuel support replacement, jet pump servicing, and control rod replacement. The grapple in its normal up position provides 7 ft 6 in. minimum water shielding over the active fuel during transit.

9.1.4.2.8 Storage Equipment

Specific storage equipment is used for new, used, or spent fuel, for control rods, and for other core components.

Specially designed fuel storage racks are provided in the spent fuel pool and in the new fuel vault. Additional storage equipment is listed in Table 9.1-7. For fuel storage racks description and fuel arrangement, see Sections 9.1.1 and 9.1.2.

9.1.4.2.9 Under Reactor Vessel Servicing Equipment

The primary functions of the under reactor vessel servicing equipment are to (a) remove and install control rod drives, (b) service thermal sleeve and control rod guide tube, and (c) install and remove the neutron detectors. Table 9.1-7 lists the equipment and tools required for servicing. Of the equipment listed, the equipment handling platform and the control rod drive handling equipment are powered electrically.

The control rod drive handling equipment is used for the removal and installation of the control rod drives from their housings. This equipment is designed in accordance with the requirements of National Electrical Manufacturers Association (NEMA, MG1: Motor and Generator Standards), American National Standards Institute Standards (ANSI C1, National Electric Code), Occupational Safety and Health Administration (OSHA, 1910.179), and American Institute of Steel Construction (AICS, Manual of Steel Construction). All lifting components are equipped with adequate brakes or gearing to prevent uncontrolled movement on loss of power or component failure.

The equipment handling platform provides a working surface for equipment and personnel performing work in the under vessel area. It is a polar platform capable of 360 degree rotation. This equipment is designed in accordance with the applicable requirements of OSHA (Vol. 37, No. 202, Part 191 ON), AISC, and ANSI C1 (National Electric Code).

The spring reel is designed to be used to pull the in-core guide tube seal or in-core detector into the in-core tube during in-core servicing.

The thermal sleeve installation tool locks, unlocks, and lowers the thermal sleeve from the control rod drive guide tube.

In-core flange seal test plug is used to determine the pressure integrity of the in-core flange seal. It is constructed of noncorrosive material. The key bender is designed to install and remove the antirotation key that is used on the thermal sleeve.

9.1.4.2.10 Description of Fuel Transfer

The fuel handling system provides a safe and effective means for transporting and handling fuel from the time it reaches the plant until it leaves the plant after postirradiation cooling. The previous subsection has described the equipment and methods used in fuel handling. The following paragraphs describe the integrated fuel handling system that ensures the design bases of the fuel handling system is satisfied.

9.1.4.2.10.1 Arrival of Fuel on Site. The new fuel arrives at the site in either one of two types of special shipping containers. The one type of container, designated the "RA Series," has space for two fuel bundles and the other type of container, designated "927 Series," has space for four fuel bundles.

The RA Series container consists of a metal inner container positioned by means of cushioning materials within an outer container. These containers with their contents meet all NRC requirements. Both inner and outer containers are reusable.

The 927 Series container is a steel unit with a removable cover. The fuel bundles are secured in the interior by a series of steel brackets. These containers also meet all NRC requirements.

After arrival of the fuel shipment the containers are visually inspected for evidence of damage during shipping. If there are indications of rough handling or damages, further investigation, for possible damage to fuel bundles, will be performed. With the RA Series the inner metal container is then removed from the outer container with appropriate lifting equipment. The containers are then taken to the refuel floor using lifting rigging designed for the task and the container is placed in a horizontal position. The covers are then removed to expose the fuel bundles. The fuel is then visually inspected for any obvious damage and a radiation survey for contamination is made.

Bundle restraints will be installed on the metal container in preparation for raising it to the vertical position. The container is then raised to the vertical position and secured using the reactor building auxiliary hoist with rigging designed for the task.

New fuel may also be shipped with channels already installed, in which case channel installation will not occur in the inspection stand or the fuel pool.

9.1.4.2.10.2 Refueling Procedure. Fuel handling procedures are described below and shown visually in Figure 9.1-13 through Figure 9.1-16.

The refueling floor layout is shown in Figure 9.1-5 and component drawings of the principal fuel handling equipment are shown in Figures 9.1-7 through 9.1-12.

During core alterations (except movement of control rods with their normal drive system), direct communication is maintained between the control room and refueling platform personnel. Direct communication is demonstrated within 1 hr prior to the start of and no less than once per 15 hr during core alterations (with the exceptions noted above). When direct communication cannot be maintained, core alterations (with the exceptions noted above) are immediately suspended.

The fuel handling process takes place primarily on the refueling floor above the reactor. The principal locations and equipment are shown on Figure 9.1-13. The reactor and fuel pool are connected to each other by slot (A) which is open during reactor refueling. At other times the slot is closed by means of blocks and gates, which make watertight barriers.

Since provisions for portable shielding are not provided in the drywell, administrative control is used during refueling operations to avoid overexposure of personnel as the result of a postulated fuel drop accident such as a drop occurring on the reactor seal plate.

New fuel in shipping containers is brought up to the refueling floor through the hatches.

The handling of new fuel on the refueling floor is illustrated in Figure 9.1-14. The transfer of the bundles between the fuel container (C), and the new fuel inspection stand (D), the new fuel storage vault (E) and the fuel pool storage racks (F) is accomplished using the reactor building crane auxiliary hoist or jib crane.

The jib crane is also used to transfer new fuel from the new fuel vault or inspection stand to the fuel prep machine in the spent fuel pool. From this point on the fuel is handled by the telescoping grapple on the refueling platform.

The storage racks in both the vault and the fuel pool hold the fuel bundles or assemblies vertical, in an array which is subcritical under all possible conditions.

The new fuel inspection stand holds one or two bundles in vertical position. The inspector(s) ride up and down on a platform, and the bundles are manually rotated on their axes. Thus the inspectors can see all visible surfaces on the bundles.

The refueling platform uses a grapple on the telescoping mast for lifting and transporting fuel bundles or assemblies. The telescoping mast can extend to the proper work level, and, in its normal up position, maintains adequate water shielding over the fuel being handled.

The reactor refueling procedure is shown schematically in Figure 9.1-15. The refueling platform moves over the fuel pool, lowers the grapple on the telescoping mast (H), and engages the bail on a new fuel assembly which is in the fuel storage rack. The assembly is lifted clear of the rack and moved through slot (A) and over the appropriate empty fuel

location in the core (J). The mast then lowers the assembly into the location, and the grapple releases the bail.

The operator then moves the platform until the grapple is over a spent fuel assembly which is to be discharged from the core. The assembly is grappled, lifted, and moved through slot (A) to the fuel pool.

To preclude the possibility of raising radioactive material out of the water, redundant electrical limit switches are incorporated in the hoist and interlocked to prevent hoisting above the preset limit. In addition, the cables on the auxiliary hoists incorporate adjustable stops that will jam the hoist cable against the hoist structure, which prevents hoisting if the limit switch interlock system should fail. Prior to moving irradiated fuel in the reactor pressure vessel, the reactor is verified to have been subcritical for at least 24 hr. This is consistent with fuel handling accident assumptions described in Section 15.7.4.5.

When spent fuel is to be transferred, it is placed in a cask, as shown in Figure 9.1-16. The refueling platform grapples a fuel bundle from the storage rack in the fuel pools, lifts it, carries it to the transfer cask area of the pool, and lowers it into the canister within cask (M). When the canister is loaded, the building crane sets the cover on the canister, and then lifts the cask out of the pool. The cask is then decontaminated and lowered through the open hatchways (P) to the cask transport system at near grade level.

9.1.4.2.10.2.1 New Fuel Preparation.

9.1.4.2.10.2.1.1 Receipt and Inspection of New Fuel. The incoming new fuel shipping container will be visually inspected for shipping damage as the containers are offloaded from the transport vehicle. The fuel is also visually inspected upon opening the container on the refuel floor.

Incoming fuel is inspected as governed by plant procedures prior to being placed in the reactor vessel. Preferably, the inspection will be done before the fuel is stored. However, depending on specific plans for the initial fueling and/or subsequent refueling, fuel may be stored until a more desirable time for inspection.

Inspections may be performed onsite or at the vendor facilities. Onsite inspections are performed with the fuel bundles secured in the fuel inspection stand. Inspections are performed, by qualified inspectors, in accordance with plant approved procedures.

If a fuel bundle fails inspection, discrepancies are noted and action will be taken to repair the fuel bundle or it will be set aside for disposition by the fuel manufacturer.

After satisfactory inspection, the fuel bundle is then transferred to a storage rack in the new fuel vault or to a storage rack in the spent fuel storage pool. The fuel bundle may or may not be channeled prior to storage.

9.1.4.2.10.2.1.2 Channeling New Fuel (Non Westinghouse Fuel). New fuel is channeled with new channels after the fuel is inspected in the inspection stand. The channels are visually inspected for defects prior to installing on the fuel. The inspected channel is then attached to lifting rigging and installed on the fuel while in the inspection stand.

The fuel can also be channeled in the spent fuel pool. For a channel located in the channel rack in the pool, the channel handling tool (fastened to the channel jib crane) is attached to the channel and raised manually with the assistance of the channel jib crane then positioned over the bundle to be channeled. The bundle is then raised into the channel and the channel fastener is installed with the channel bolt wrench.

9.1.4.2.10.2.1.3 Channeling New Fuel (Westinghouse Fuel Only). Westinghouse Fuel (SVEA-96 type) requires the fuel bundle to be inserted into the combination fuel channel/lower tie plate. The new channels will be received up on the refueling floor and inspected then installed into the new fuel storage vault or the fuel prep machine. The Westinghouse fuel is inspected in the inspection stand then moved to the storage vault or fuel prep machine by use of the jib crane. The bundle is positioned over the channel and the temporary lower tie plate, installed for shipping purposes, if not removed earlier, is then removed and the four mini bundle assemblies are inserted into the channel. With the bundle seated, the rigging is removed, the temporary upper bale handle is removed and the permanent bail handle is installed and torqued. The bundle, if channeled in the new fuel storage vault, is then ready to be transferred to the spent fuel pool prep machine.

9.1.4.2.10.2.1.4 Equipment Preparation. Prior to use for refueling, refueling equipment will be placed in readiness. All tools, grapples, slings, strongbacks, stud tensioners, etc. will be given a thorough check and any defective (or well worn) parts will be replaced. Air hoses on the main grapples will be routinely leak tested. Crane cables will be routinely inspected. All necessary maintenance and interlock checks will be performed to ensure no extended outage due to equipment failure.

The channeled new fuel will be ready in the storage pool.

9.1.4.2.10.2.2 Reactor Shutdown. The reactor is shut down according to a prescribed procedure. During cooldown the reactor pressure vessel is vented. The reactor well shield plugs are removed using the reactor building crane and the supplied slings.

This operation can be immediately followed by removal of the canal plugs. These activities are covered in Sections 9.1.4.2.10.2.3.3 and 9.1.4.2.10.2.4.

9.1.4.2.10.2.2.1 Drywell Head Removal. Immediately after removal of the reactor well shield plugs, the work to unbolt the drywell head can begin. The drywell head is attached by removable bolts. The bolts are unscrewed and together with their nuts are removed and stored.

The head strongback is attached to the unbolted drywell head and lifted by the overhead reactor building crane to its appointed storage space on the refueling floor.

9.1.4.2.10.2.2.2 Reactor Well Servicing. When the drywell head has been removed, an array of piping is exposed that must be serviced. Various vent piping penetrations through the reactor well must be removed and the penetrations made watertight. Vessel head piping and head insulation must be removed and transported to storage on the refueling floor.

Water level in the vessel is now adjusted in preparation for head removal.

9.1.4.2.10.2.3 Reactor Vessel Opening.

9.1.4.2.10.2.3.1 Vessel Head Removal. The stud tensioners are transported by the reactor building crane and positioned on the reactor vessel head. Each stud is tensioned and its nut loosened in a prescribed manner to uniformly detension the head. When the nuts are loose, they are backed off using a nut runner until only a few threads remain engaged. The vessel nut handling tool is engaged in the upper part of the nut and the nut is rotated free from the stud. The nuts and washers are placed in the racks provided for them and transported to the refueling floor for storage. With the nuts and washers removed, the vessel stud protectors and vessel head guide caps are installed.

The head strongback, transported by the reactor building crane, is attached to the vessel head and the head transported to the head holding pedestals on the refueling floor. The head holding pedestals keep the vessel head elevated to facilitate inspection and O-ring replacement.

Alternatively, the reactor vessel head can be removed using the RPV head stud tensioner carousel/strongback, a tool that combines the functions of the stud tensioner handling frame and the head lifting strongback. The carousel/strongback, with the stud tensioners suspended from its integral monorail, is transported by the reactor building crane and attached to the RPV head. Using the stud tensioners, the nuts are removed from the RPV head studs in the manner previously described, the nuts placed in a circular nut storage transporting rack, also integral to the carousel/strongback. When all the head stud nuts are removed, the RPV head stud tensioner carousel/strongback, with the RPV head attached and all head stud nuts stowed in the integral nut rack, is transported by the reactor building crane to the head holding pedestals on the refueling floor.

The studs in line with the fuel transfer canal are removed from the vessel flange and placed in the rack provided. The loaded rack is transported to the refueling floor for storage.

9.1.4.2.10.2.3.2 Dryer Removal. The dryer sling assembly is lowered by the reactor building crane and attached to the dryer lifting lugs. The dryer is lifted from the reactor vessel and transported to its storage location in the dryer-separator storage pool adjacent to the reactor well. The dryer is sprayed with water to control the spread of contamination during transfer and until water level in reactor well and dryer-separator pool cover the dryer.

9.1.4.2.10.2.3.3 Separator Removal. The four main steam lines are plugged from inside the vessel using the furnished plugs for this duty. Servicing of the safety and relief valves can thus be accomplished without adding to the critical refueling path time. The separator is unbolted using the shroud head bolt wrenches furnished. The fuel pool slot plugs are then removed.

The separator sling assembly is lowered into the vessel and attached to the separator lifting lugs. The water in the reactor well and in the dryer-separator storage is raised to fuel pool water level, and the separator is transferred to its allotted storage place in the equipment pool.

9.1.4.2.10.2.3.4 Fuel Bundle Sampling. During reactor operation, the core offgas radiation level is monitored. If a rise in offgas activity indicating a fuel failure has been noted, the reactor core will be sampled during a refueling outage to locate any leaking fuel assemblies.

9.1.4.2.10.2.4 Refueling and Reactor Servicing. The gates isolating the fuel pool from the reactor well are now removed thereby interconnecting the fuel pool, the reactor well, and the dryer-separator storage pool. The actual refueling of the reactor can now begin.

9.1.4.2.10.2.4.1 Refueling. The refueling pattern will depend on various factors such as fuel performance, plant loading, and fuel design.

Detailed procedures will be developed for various refueling tasks such as fuel receipt, fuel inspection, fuel transfer from vault to pool, fuel movements within the pool, fuel movements within the reactor, or between the spent fuel pool and the reactor, as well as procedures for handling of other core components.

During a normal equilibrium outage, approximately 33% of the fuel is removed from the reactor vessel, 33% of the fuel is shuffled in the core (generally from center to peripheral locations), and 33% new fuel is installed. The actual fuel handling is done with the fuel grapple which is an integral part of the refueling platform. The platform runs on rails over the fuel pool and the reactor well. In addition to the fuel grapple, the refueling platform is equipped with two auxiliary hoists which can be used with various grapples to service other reactor internals.

To move fuel, the fuel grapple is aligned over the fuel assembly, lowered and attached to the fuel bundle bail. The fuel bundle is raised out of the core, moved through the refueling slot to

the fuel pool, positioned over the storage rack and lowered to storage. Fuel is shuffled and new fuel is moved from the storage pool to the reactor vessel in the same manner.

9.1.4.2.10.2.5 Vessel Closure. The following steps, when performed, will return the reactor to operating condition. The procedures are the reverse of those described in the proceeding sections. Many steps are performed in parallel and not in the sequences listed.

a. Core verification. The core position of each fuel assembly must be verified to ensure the desired core configuration has been attained;

b. Control rod drive tests. The control rod drive timing, friction and scram tests are performed;

c. Install inner fuel pool gate;

d. Replace separator and drain dryer-separator storage pool and reactor well;

e. Bolt separator and remove the four steam line plugs;

f. Replace steam dryer;

g. Install reactor vessel head;

h. Decontaminate reactor well;

i. Open drywell vents, install vent piping;

j. Replace slot plugs;

k. Replace vessel studs;

l. Install vessel head piping and insulation;

m. Replace dryer-separator canal plugs;

n. Hydrotest vessel, if necessary;

o. Install drywell head;

p. Install reactor well shield plugs; and

q. Startup tests. The reactor is returned to full power operation. Power is increased gradually in a series of steps until the reactor is operating at rated

power. At specific steps during the approach to power, the in-core flux monitors are calibrated.

9.1.4.2.10.3 Departure of Spent Fuel From the Reactor Building. Spent fuel is removed from the Reactor Building in an NRC licensed shielded cask. The reactor building and cask handling facilities (see Section 9.1.4.2.2 for a description of the crane) are designed to handle casks up to 125 tons.

The following description of the spent fuel departure is based on the licensed Holtec HI-STORM 100 System which includes a transfer cask of 125 tons maximum weight with a capacity of 68 BWR fuel bundles.

After the cask has been inspected and prepared for lifting, it is transferred to the reactor operating floor and placed onto the cask decontamination pad where it is prepared for placement into the spent fuel cask loading area. The cask provides shielding for a canister contained within the cask. The canister, when sealed, is a confinement for the fuel.

The cask is next raised and transferred into the spent fuel cask loading area. The cask lifting yoke is lowered until it is disengaged from the cask trunnions.

Spent fuel is transferred under water from storage in the fuel pool to the cask using the telescoping fuel grapple mounted on the refueling platform. When the cask is filled with spent fuel, the canister closure head is placed on the cask and the lift yoke engaged with the cask trunnions. The loaded cask is raised and transferred to the cask decontamination pad.

The cask is checked by health physics personnel and decontamination is performed with high pressure water sprays, chemicals, and hand scrubbing, as required, to clean the cask. The canister is sealed, dewatered and inerted. The cask lid is installed and the cask prepared for lifting.

The sealed canister is then transferred to a storage cask. The storage cask and canister are moved to the spent fuel storage area.

9.1.4.3 Fuel Handling Safety Evaluation

Stresses in all structural and mechanical parts of the reactor building crane system are far below the endurance limits for infinite life of the various materials for both the rated crane capacity and the test load of 125% of rated load. All loads to be handled are below rated crane capacity. Therefore, stresses should never reach allowable working stresses. Loads on the structural parts vary but do not reverse. The only critical parts with stress reversals are the rotating parts, and these are provided with single failure protection. Since the crane is to operate under normal temperature conditions and since the stress levels are below the

endurance limits for infinite life, testing of the crane to 125% of rated capacity provides reasonable assurance that the crane will not fail while handling a spent fuel cask.

As described in Section 9.1.4.2.2.2, sufficient redundancy is provided in the reactor building crane so that no credible postulated failure of any crane component will result in the dropping of the fuel cask. Therefore, the consequences of a cask drop accident are precluded. In addition, crane travel over the spent fuel pool is controlled by travel path (Figure 9.1-5) and interlocks that prohibit the crane from traveling over the spent fuel racks. At no time while being transported does the cask pass over any safe shutdown items. The objectives of Regulatory Guide 1.13 are met. Furthermore, when the crane is carrying the cask over the refueling floor area, the clear distance between the bottom of the cask and the refueling floor is minimized by good operating practice. Should any crane failure occur while the crane is moving the cask over the refueling floor area, the crane drop of less than one inch described in Section 9.1.4.2.2.2 prevents the cask from physically contacting the floor. See Section 9.1.4.2.2.2 for safety features which ensure crane stability during tornado and seismic excitation.

Jib cranes MT-CRA-9A and 9B are designed and equipped to meet the Class A1 (standby) service requirements of CMAA Specification #70. Each crane is capable of raising, lowering, holding, and transporting a test work load of 125% of rated work load without damage to or excessive deflection in a part and without inducing permanent deformation in any crane element. Cables are of the nonrotating type to prevent rotation of load during raising or lowering operations.

The following factors of safety are used in design and are based on the maximum stress produced by worst load combinations and the average ultimate strength of the material, unless otherwise stated herein:

a. All load carrying components except structural members and hoisting ropes are designed to have a minimum safety factor of five;

b. All mechanical parts subject to dynamic strains, such as gears, shafts, drums, blocks, and other integral parts, have a minimum safety factor of five;

c. All hoisting ropes are designed to have a minimum safety factor of five based on the published breaking strength of the rope;

d. Components of the jib cranes are adequately proportioned to limit the overall deflections of the crane to safe limits under any position of the loaded trolley hoist. Maximum vertical static deflection of the boom with nameplate rated hook load is less than 0.6 in.; and

e. Structural members/shapes not covered by the above safety factors are designed in accordance with CMAA Specification No. 70, and if not covered by CMAA Specification No. 70, in accordance with the AISC Specification for the design, fabrication, and erection of structural steel for buildings except that the allowable stress shall not exceed 80% of the AISC allowable design stress.

Jib cranes MT-CRA-9A and 9B are designed to Seismic Category I requirements (with lifted load).

The cranes are equipped with switches to limit their lifted load to 1000 lb.

The cranes are exempted from the NUREG 0612 requirement because the definition of "Heavy Loads" at CGS is 1200 lb. The cranes are also not required to hold their lifted load during a seismic event since the maximum load of 1000 lb (or 1200 lb) is enveloped by analysis that indicates the high density spent fuel storage racks can withstand a drop (both from a structural and criticality standpoint) of 1510 lb from the height of the fuel pool water surface. Licensee Controlled Specifications limit the loads over spent fuel in the spent fuel pool to 1500 lb whenever irradiated fuel assemblies are in the spent fuel storage pool. Crane operations with loads will be suspended in the spent fuel storage pool area if there is less than 22 ft of water over the top of fuel assemblies seated in the storage racks. Based on the analysis presented in Section 15.7, the radiological consequences of a fuel bundle (with or without a channel) dropped by the jib crane are bounded by the fuel handling analysis which assumed a bundle dropped from 34 ft into the reactor core. This resulted in a much higher kinetic energy level. In comparing the jib crane drop to the reactor core drop, it is not possible to cause the release of more fission gases from the damaged fuel than assumed in the Section 15.7 analysis due to the shorter drop distance and resulting lower kinetic energy.

The cranes are designed so as to be capable of operating within the following tolerances:

a. With all brakes adjusted for normal operation, it is possible to control the vertical movement to within 0.25 in. under all conditions of loading,

b. Cranes operate through full hook lift without noticeable rotation of load, and

c. With hook carrying 100% of rated load and lowering at full speed, the motor does not exceed 125% of synchronous speed.

Since jib cranes MT-CRA-9A and 9B are to be used on and around the fuel pool for handling new and spent fuel and other components in the work area, the following safety features are provided:

The hoist is motorized with a motorized boom and jib. To preclude the possibility of inadvertently raising radioactive materials out of the water, a specially prepared sling or

handling tool will be used when handling materials not intended to be raised out of the water. The length of the sling or tool will be administratively controlled such that with the crane at full mechanical up travel the top of the active fuel will be at a minimum of 7 ft 6 in. below water level.

The unit is equipped with two full capacity brakes. A mechanical force gauge is supplied to automatically stop the hoist on an overload signal of 1000 +50 lb. Two additional microswitches are wired in parallel and the three leads are brought out with the power leads for connection to a platform receptacle. The two additional switches are designed to open at 400 ±50 lb (these switches are not normally used for any function).

Safety aspects (evaluation) of the fuel servicing equipment are discussed in Section 9.1.4.2.3 and safety aspects of the refueling equipment are discussed throughout Section 9.1.4.2.7. A description of fuel transfer, including appropriate safety features, is provided in Section 9.1.4.2.10. In addition, the following summary safety evaluation of the fuel handling system is provided below.

The fuel prep machine can remove and install channels with all parts remaining under water. Mechanical stops in use when handling irradiated fuel prevent the carriage from lifting the fuel bundle or assembly to a height where water shielding for the active fuel is less than 7.5 ft. Irradiated channels, as well as small parts, such as bolts and springs, are stored underwater. The spaces in the channel storage rack have center posts which prevent the loading of fuel bundles into this rack.

There are no nuclear safety problems associated with the handling of new fuel bundles, singly or in pairs. Equipment and procedures prevent an accumulation of more than two bundles in any location.

The refueling platform is designed to prevent it from toppling into the pools during a SSE. The refueling mast has normal up limit switches to prevent raising the top of active fuel to a height of less than 7.5 ft below the water surface. The grapple is hoisted by redundant cables inside the mast and is lowered by gravity. A digital readout is displayed to the operator, showing him the exact coordinates of the grapple over the core.

The mast is suspended and gimbaled from the trolley, near its top, so that the mast can be swung about the axis of platform travel to remove the grapple from the water for servicing and storage.

The grapple has two mechanically coupled hooks, operated by a single air cylinder. Engagement is indicated to the operator.

In addition to the main hoist on the trolley, there is an auxiliary hoist on the trolley, and another hoist on its own monorail. These three hoists are precluded from operating simultaneously because control power is available to only one of them at a time.

The two auxiliary hoists have electrical interlocks which will prevent lifting the top of the active fuel on lifted fuel assemblies higher than 7.5 ft under water. Adjustable mechanical jam-stops on the cables back up these interlocks.

In summary, the fuel handling system complies with Regulatory Guide 1.13, Revision 1, GDC 2, 3, 4, 5, 61, 62, and 63, and applicable portions of 10 CFR Part 50.

The safety evaluation of the new and spent fuel storage is presented in Sections 9.1.1.3 and 9.1.2.3.

9.1.4.4 Testing and Inspection Requirements

9.1.4.4.1 Testing and Inspection of Cranes

The main and auxiliary hooks of the reactor building crane are proof tested in the vertical, direction with a total uniformly applied load equal to 150% of their rated capacity. Tests on the main hook are made with a load suspended. After the load tests, the hooks are checked by magnetic particle inspection and for any dimensional change. When completely assembled, the crane components (except for wire ropes), are operated to ensure the accuracy of fabrication and the quality of workmanship.

After erection in the reactor building, the crane is statically tested to 125% of rated capacity (156.25 tons for the main hoist and 18.75 tons for the auxiliary hoist). The tests are performed in accordance with written procedures which include movement in all positions of hoisting, lowering and trolley and bridge travel. After completion of the static test, a full performance test with 100% of the design rated load is performed.

Operational tests and visual inspections are made at periodic intervals during the life of the crane to demonstrate its ability to safely perform its functions. The crane hooks are to be inspected by the magnetic particle or liquid penetrant methods as applicable. These inspections and tests will be scheduled to precede major fuel handling activities.

Jib crane hooks (9A and 9B) shall be either magnetic particle inspected in accordance with ASTM E-109 (July, 1975) or liquid penetrant inspected in accordance with ASTM E-165 (July, 1975). Standard shop tests shall be performed on all equipment. Field tests shall be performed upon each piece of equipment, after completion of erection and installation, in order to verify the overall performance of the equipment against requirements and to check the mechanical performance of the equipment with regard to applicable specification requirements.

Periodic operational tests and inspection will be performed on the jib cranes to demonstrate their ability to perform their safety function.

9.1.4.4.2 Inspection and Testing Requirements of Refueling and Servicing Equipment

9.1.4.4.2.1 Inspection. Refueling and servicing equipment is subject to the strict controls of quality assurance, incorporating the requirements of 10 CFR Part 50, Appendix B. Components defined as important to safety, such as the fuel storage racks and refueling platform, have an additional set of engineering specified "quality requirements" that identify safety-related features which require specific quality assurance verification of compliance to drawing requirements.

For components classified as ASME Section III, the shop operation must secure and maintain an ASME "N" stamp, which requires the submittal of an acceptable ASME quality plan and a corresponding procedural manual.

Additionally, the shop operation must submit to frequent ASME audits and component inspections by resident state code inspectors.

Prior to shipment, every component inspection item is reviewed by quality assurance supervisory personnel and combined into a summary product quality checklist (PQL). By issuance of the PQL, verification is made that all quality requirements have been confirmed and are on record in the product's historical file.

9.1.4.4.2.2 Testing. Qualification testing is performed on refueling and servicing equipment prior to multiunit production. Test specifications are defined by the responsible design engineer and may include; sequence of operations, load capacity and life cycles tests. These test activities are performed by an independent test engineering group and, in many cases, a full design review of the product is conducted before and after the qualification testing cycle. Any design changes affecting function, that are made after the completion of qualification testing, are requalified by test or calculation.

Functional tests are performed in the shop prior to the shipment of production units and include electrical tests, leak tests and sequence of operations tests.

When the unit is received at the site, it is inspected to insure no damage has occurred, during transit or storage. Prior to use and at periodic intervals, each piece of equipment is again tested to ensure the electrical and/or mechanical functions are operational.

Passive units, such as the fuel storage racks are visually inspected prior to use.

There is an operation and maintenance instruction manual for each tool that additionally requires a series of functional checks each time the unit is operated for reactor refueling or servicing.

Fuel handling and vessel servicing equipment preoperational tests are described in Section 14.2.12.1.12.

9.1.4.5 Instrumentation Requirements

9.1.4.5.1 Instrument Requirements - Cranes

Operation of the reactor building crane is from the cab or from the floor by radio control. Control at any one time is from one point only. Sufficient electrical circuitry in the system is provided such that no single credible electrical component failure will cause the load to drop. The reactor building crane and its safety features are described in Section 9.1.4.2.2.

The refueling platform contains a position-indicating system that indicates the position of the fuel grapple over the core. Interlocks on both the fuel grapple hoist and the auxiliary hoists are provided for safety purposes. The refueling interlocks are described and evaluated in Section 7.7.1.13.

For a description of jib crane safety-related interlocks, see Section 9.1.4.3. Except for jib cranes MT-CRA-9A and MT-CRA-9B, limit switches are provided for all electrically operated hoists to prevent overhoisting. Pushbutton pendant controls are provided with stepped controls for multispeed motions.

9.1.4.5.2 Instrumentation Requirements - Refueling and Servicing Equipment

The majority of the refueling and servicing equipment is manually operated and controlled by the operator's visual observations. This type of operation does not necessitate the need for a dynamic instrumentation system.

However, there are several components that are essential to prudent operation that do have instrumentation and control systems.

The refueling platform has a non-safety-related X-Y-Z position indicator system that informs the operator which core fuel cell the fuel grapple is accessing. Interlocks and control room monitor are provided to prevent the fuel grapple from operating in a fuel cell where the control rod is not in the proper orientation for refueling. Refer to Section 7.7.1.13 for discussion of refueling interlocks.

Additionally, a programmable logic controller (PLC), which is a part of the refueling platform control system, provides indications to the operator for grapple limits, hoist load conditions, and confirmation that the grapple hook is either engaged or released.

The load for the main hoist, auxiliary frame hoist, and monorail hoist is determined by electronic load cells and strain gauge transmitters. The load for the main hoist and auxiliary frame hoist is input to the PLC. The PLC provides hoist loaded and hoist overload signals for both the main hoist and auxiliary frame hoist, and provides slack cable signal for the main hoist. Setpoint modules monitor the monorail hoist load and provide hoist loaded and hoist overload interlock signals. Automatic shutdown occurs whenever threshold limits are exceeded on either the main hoist, the auxiliary frame hoist, or the monorail hoist.

9.1.4.5.3 Fuel Support Grapple

Although the fuel support piece grapple is not important to safety, it has an instrumentation system consisting of mechanical switches and indicator lights. This system provides the operator with a positive indication that the grapple is properly aligned and oriented and that the grappling mechanism is either extended or retracted.

The Westinghouse MLT, also used to grapple and remove fuel support pieces, is designated Safety Class 3. The instrumentation system for the MLT consists of flag-type indicators directly linked to each grapple mechanism to show when the grapple is engaged to the fuel support piece. The MLT also incorporates internal guide tubes for underwater cameras, allowing the MLT operator to view and verify proper seating and alignment of the fuel support piece on its guide pin.

9.1.4.5.4 Other

See Table 9.1-7 for additional refueling and servicing equipment.

9.1.4.5.5 Radiation Monitoring

The radiation monitoring equipment for the refueling and servicing area is discussed in Sections 11.5.2.1.2 and 12.3.4.

9.1.5 CONTROL OF HEAVY LOADS

9.1.5.1 Introduction/Licensing Background

Columbia Generating Station controls heavy load lifts by implementing NUREG-0612 recommended guidelines in its plant procedures. Columbia's heavy loads program procedures focus on areas where a load drop could impact stored spent fuel, fuel in the reactor core, or equipment that may be required to achieve safe shutdown or permit continued decay heat

removal. Columbia reduces the likelihood of dropping heavy loads by implementing criteria for establishing safe load paths, procedures for load handling operations, training of crane operators, design, testing, inspection, and maintenance of cranes and lifting devices, and analyses of the impact of heavy load drops. Columbia also mitigates the consequences of a heavy load drop with the use of a single-failure-proof crane in certain applications for increased handling system reliability. In other areas where a single-failure-proof crane is not used, load drop and consequence analyses are performed for assessing the impact of dropped loads on plant safety and operations.

9.1.5.2 Safety Basis

The recommended guidelines established in NUREG-0612 are the safety basis that provides a defense-in-depth approach to controlling the handling of heavy loads near spent fuel and safe shutdown equipment. These guidelines are reflected in Columbia's heavy loads handling procedures. These procedures incorporate NUREG-0612 requirements except for those deviations approved by the NRC. Columbia's heavy loads handling procedures ensure that the risk associated with load handling failures is acceptably low, based on meeting requirements of Phase 1 of NUREG-0612, Section 5.1.1, and based on increasing the handling system reliability by meeting NUREG-0612 Phase II guidelines with the utilization of a single-failure-proof crane where a load drop could impact on stored spent fuel and fuel in the reactor core. An exception to NUREG-0612 Phase I, Section 5.1.1(1) was approved to not require load paths marked on the floor for monorail hoists because the single available path cannot vary. Additionally, load paths for the Reactor Building Crane loads are not required to be permanently marked on the refueling floor because the multiple paths would overlap in places and would be difficult to follow. Furthermore, protective coverings on the refueling floor would cover the paths for many lifts. The main Reactor Building crane (MT-CRA-2) has been approved as single-failure-proof crane that meets the criteria established in either NUREG-0554 or NUREG-0612 Appendix C. Additional defense-in-depth analyses and evaluations are performed for heavy load lifts not associated with the use of a single-failure-proof crane in areas where a load drop could impact equipment that may be required to achieve safe shutdown or permit continued decay heat removal.

9.1.5.3 Scope of Overhead Heavy Load Handling Systems

At CGS, overhead handling systems are used to handle heavy loads in the area of the reactor vessel or spent fuel in the spent fuel pool. Additionally, loads are handled in other areas where their accidental drop may damage safe shutdown systems or systems that permit continued decay heat removal. The following is the committed heavy lifts along with their associated cranes/hoists.

Committed Heavy Lifts

	Committed Heavy Load Lift		Committed Heavy Load Lift
1	Vessel Cavity Shield Plug (MT-CRA-2)	21	MPC Lid (MT-CRA-2)
2	Dry/Separator Pool Plugs Top (MT-CRA-2)	22	HI-STORM Lid (MT-CRA-2)
3	Dry/Separator Pool Plugs Bottom (MT-CRA-2)	23	MPC with contents (MT-CRA-2)
4	Spent Fuel Gates (MT-CRA-2)	24	MPC without contents (MT-CRA-2)
5	Fuel Pool Shield (Slot) Plugs (MT-CRA-2)	25	Sea Van Container & other loads during plant operation (MT-CRA-1)
6	"Cattle" Chute (MT-CRA-2)	26	Standby Service Water Pumps (MT-CRA-6A & 6B)
7	Space Frame (w/head insulation) (MT-CRA-2)	27	RHR A&B Shield Blocks (MT-HOI-6)
8	Drywell Head (MT-CRA-2)	28	RHR A&B Pumps (MT-HOI-6)
9	Reactor Head (MT-CRA-2)	29	RHR C Shield Blocks (MT-HOI-8)
10	Steam Dryer (MT-CRA-2)	30	RHR C Pumps (MT-HOI-8)
11	Moisture Separator (MT-CRA-2)	31	RCIC Shield Blocks (MT-HOI-7)
12	Reactor Vessel Service Platform (MT-CRA-2)	32	RCIC Pump & Turbine (MT-HOI-7)
13	RHR HX Floor Plugs (MT-CRA-2)	33	LPCS Shield Blocks (MT-HOI-9)
14	New Fuel Pit Floor Plugs (MT-CRA-2)	34	LPCS Pump/Motor (MT-HOI-9)
15	FPC Skimmer Surge Tank Plugs (MT-CRA-2)	35	HPCS Shield Blocks (MT-HOI-10)
16	Refueling Basket (MT-CRA-2)	36	HPCS Pump (MT-HOI-10)
17	RPV Head Stud Tension/Carousel (MT-CRA-2)	37	RRC Motors (MT-HOI-16)
18	Mating Device (MT-CRA-2)	38	Steam (Pipe) Tunnel Shield Blocks (MT-HOI-18)
19	HI-TRAC Cask with or without MPC, lid, etc. (MT-CRA-2)		
20	HI-TRAC Top Lid (MT-CRA-2)		

9.1.5.4 Control of Heavy Loads Program

Columbia's Control of Heavy Loads Program consists of the following:

1. Commitments to NUREG-0612, Phase I General Requirements.

2. Commitments to NUREG-0612, Phase II with the utilization of a single-failure-proof crane for Reactor Pressure Vessel Head (RPVH) lifts and for spent fuel cask lifts over the spent fuel pool. Additional defense-in-depth analyses and evaluations are performed for heavy load lifts not associated with the use of a single-failure-proof crane in areas where a load drop could impact equipment that may be required to achieve safe shutdown or permit continued decay heat removal.

9.1.5.4.1 Columbia Generating Station Commitments in Response to NUREG-0612 Section 5.1.1, Phase I Guidelines

9.1.5.4.1.1 Safe Load Path. Safe load paths are defined in Columbia's heavy load lifting procedures and some temporary paths may be marked when it can help assure safe load handling. A person in charge, other than the operator, is responsible for inspecting the load path for potential interferences. Load paths are not marked on the floor for monorail hoists because the single available path can not vary. Load paths for the Reactor Building Crane loads are not permanently marked on the refueling floor because the multiple paths would overlap in places and would be difficult to follow. Protective coverings on the refueling floor would cover the paths for many lifts. The above exceptions are approved NRC deviations.

9.1.5.4.1.2 Procedures. Procedures are implemented to prevent personnel errors consistent with the requirements of Section 5.1.1(2) of NUREG-0612.

9.1.5.4.1.3 Crane and Hoist Operators. Plant-wide training and qualification procedures have been implemented and meet the requirement found in Section 5.1.1(3) of NUREG-0612.

9.1.5.4.1.4 Special Lifting Devices. Special lifting devices satisfy the guidelines of ANSI N14.6-1978 are identified, maintained and controlled by plant procedures. These requirements are consistent with Section 5.1.1(4) of NUREG-0612. Dynamic loads determined as a percentage of static loads are added to the static load to obtain the design load.

9.1.5.4.1.5 Lifting Devices that are not Specially Designed. Lifting devices that are not specially designed are used in accordance with ANSI B30.9-1971. Usage is restricted to properly trained and qualified site rigging personnel consistent with the requirements found in Section 5.1.1(5) of NUREG-0612. Dynamic loads determined as a percentage of static loads are added to the static load to obtain the design load.

9.1.5.4.1.6 Crane Inspection, Testing and Maintenance. Cranes are inspected, tested, and maintained in accordance with the guidance in Chapter 2-2 of ANSI B30.2-1976 by inspection, maintenance and testing procedures. This is consistent with the requirements found in Section 5.1.1(6) of NUREG-0612.

9.1.5.4.1.7 Hoist and Crane Design

9.1.5.4.1.7.1 Hoist Design. In the absence of specific guidance from NUREG-0612, hoists are designed to applicable requirements of industry standards CMAA 74, ANSI B30.11 and ANSI B30.16.

9.1.5.4.1.7.2 Crane Design. Cranes are designed according to applicable criteria and guidelines of Chapter 2-1 of ANSI B30.2-1976. These crane requirements are consistent with Section 5.1.1(7) of NUREG-0612.

9.1.5.4.2 Reactor Pressure Vessel Head Lifting Procedures

Columbia Generating Station RPV handling procedures are used to control the lift and replacement of the reactor pressure vessel head. These procedures rely on the use of the main Reactor Building Crane (MT-CRA-2) which is a single-failure-proof crane.

9.1.5.4.3 Single-Failure-Proof Cranes for Spent Fuel Casks

The Spent Fuel Casks lifts and movements are controlled by CGS procedures. These procedures rely on the use of the main Reactor Building Crane (MT-CRA-2) which is a single-failure-proof crane.

9.1.5.4.4 Other Analyses

Additional defense-in-depth analyses and evaluations are performed for heavy load lifts not associated with the use of a single-failure-proof crane in areas where a load drop could impact equipment that may be required to achieve safe shutdown or permit continued decay heat removal.

9.1.5.5 Safety Evaluation

The heavy loads handling activities at CGS are controlled in a manner consistent with the requirements of Phase I of NUREG-0612, except as allowed by the NRC, and with industry standards to ensure defense-in-depth is maintained during heavy load movements. A single-failure-proof crane is used for Reactor Pressure Vessel Head and Spent Fuel Cask movements. Evaluations are performed for heavy load lifts not associated with the use of a single-failure-proof crane and appropriate measures are implemented as necessary to ensure adequate safety

is maintained. Risks associated with heavy load lifting are identified, assessed and managed through usage of CGS lifting procedures.

9.1.6 REFERENCES

9.1-1 EMF-2837(P), Revision 0, "Columbia Generating Station New Fuel Storage Vault Criticality Safety Analysis for ATRIUM-10 Fuel," Framatome ANP, December 2002.

9.1-2 WAPD-TM-678 PDQ-7 Reference Manual by W. R. Caldwell, Bettis Atomic Power Laboratory, January 1967.

9.1-3 NUS-894 NUMICE-2, A Spectrum Dependent Non-spatial Cell Depletion Code by Y. S. Kim, NUS Corporation, March 1972. Numice is NUS' version of LEOPARD.

9.1-4 ORNL-4938 KENO-IV An Improved Monte Carlo Criticality Program by L. M. Petrie and N. F. Cross, ORNL, November 1975.

9.1-5 ORNL-TM-3706 AMPX-L Modular Code System for Generating Coupled Multi-Group Neutron Gamma Libraries from ENDF/B by N. M. Greene et al., ORNL, November 1974.

9.1-6 MRI/STARDYNE3 (Version 3), developed by Mechanics Research, Inc., Los Angeles, California.

9.1-7 ANF-91-069(P), "Criticality Safety Analysis Washington Public Power Supply System WNP-2 Spent Fuel Storage Rack with 9 x 9-9X Fuel," March 1991.

9.1-8 CE NPSD-786-P, Revision 1, "WNP-2 SVEA-96 Spent Fuel Storage Criticality Safety Evaluation," September 1998.

9.1-9 EMF-2874(P), "Columbia Generating Station Spent Fuel Storage Pool Criticality Safety Analysis for ATRIUM-10 Fuel," Framatome ANP, February 2003.

9.1-10 MCNP4A - A General Monte Carlo N-Particle Radiation Transport Code, Version 4A, LA-12625, March 1994.

9.1-11 GEH-0000-0075-4920, Revision 6, GE14 Fuel Design Cycle-Independent Analyses for Energy Northwest Columbia Generating Station, May 2017.

9.1-12 NUREG-0612, Control of Heavy Loads at Nuclear Power Plants, Resolution of Technical Activity A-36, July 1980.

9.1-13 002N3439, GNF2 Fuel Design Cycle-Independent Analyses for Energy Northwest Columbia Generating Station (most recent version referenced in the COLR).

9.1-14 NEDC-33270P "GNF2 Advantage Generic Compliance with NEDE-24011-P-A (GESTAR II)," Global Nuclear Fuel, (most recent version referenced in COLR).

Table 9.1-1

9 x 9-9X, SVEA-96, and ATRIUM-10 Assembly Parameters

Parameters	9 x 9-9X	SVEA-96	ATRIUM-10
Enrichment (wt % ^{235}U)	Bundle average up to 4.0	Bundle average up to 3.77	Lattice average up to 4.6
Pellet diameter (in.)	0.3665	0.3224	0.3413
Pellet density (% TD)	95	95.8	95.85
Average fuel length (in.)	Infinite (tie plates not modeled)	95.8	Infinite
Clad I.D./ O.D. (in.)	0.374/0.433	0.329/0.379	0.3480/0.3957
Gd_2O_3 content	None	None	≥10 rods at ≥2 wt % Gd_2O_3
Fuel rods per assembly	72	96	91
Internal water channel	1	1	1
Rod pitch (in.)	0.569	0.488	0.510

Table 9.1-2

Calculated Dose Rate During Refueling

Refueling	5 Ft Above Fuel Pool Water Level (mrem/hr)
1	3.5
2	4.3
3	4.8
4	5.3
5	5.7
6	6.0
7	6.2
8	6.4
9	6.6
10	6.8
11	6.9

Table 9.1-3

Fuel Pool Cooling and Cleanup System

Equipment	Data
Fuel pool heat exchangers	
Number	2
Type	Tube and shell
Material tube/shell	SS/CS
Capacity, Btu/hr/heat exchanger	4.0×10^6
Cooling water flow, gpm/heat exchanger	575
Code and standards	ASME/III, Class 3, and TEMA, Class R
Seismic Category	I
Fuel pool circulation pumps	
Number	2
Type	Horizontal, centrifugal
Material	SS
Flow, gpm	575
Head, ft of H_2O	160
Motor size, hp	50
Seismic Category	I
Code	ASME/III, Class 3
Fuel pool filter demineralizer	
Number	2
Design flow rate, gpm	1100
Design pressure, psig	150
Design temperature, °F	150
Material	CS-plastic lined
Code	ASME/III, Class 3
Seismic Category	II

Table 9.1-3

Fuel Pool Cooling and Cleanup System (Continued)

Equipment	Data
Piping and valves	
Design pressure, psig	150 HX tube side/300 HX shell side
Material	CS/SS
Code	ASME/III, Class 3
Seismic Category	
Fuel pool cooling portion	I
Cleanup portion	II

Table 9.1-4

Spent Fuel Pool Projected Heat Loads

Table 9.1-4 is deleted. The cycle-specific information provided in this table is obsolete. The heat load in the spent fuel pool during normal refueling activities will vary based on outage-specific activities and the transfer of spent fuel to the Independent Spent Fuel Storage Installation.

Table 9.1-5

Fuel Pool Cooling and Cleanup System
Performance Data

Design heat load, Btu/hr	8.0×10^6
Maximum heat load, Btu/hr	44.3×10^6 (see note)
System design pressure, psig	150
System design temperature, °F	150 normal, 175 maximum
Fuel pool water volume, gal	350,000
Dryer-separator pool water volume, gal	293,600
Reactor well water volume, gal	210,000

NOTE: The maximum heat load is the decay heat of one full core load of the fuel plus the remaining decay heat of previously discharged fuel assemblies. The heat load and the fuel pool cooling system will be controlled such that the temperature limits shown in Table 9.1-6 are maintained.

Table 9.1-6

Bounding Fuel Pool Cooling Events

Fuel Pool Heat Load/Scenario	Fuel Cycle Length (Months)	FPC Loops		RHR Loops in FPC Assist Mode		Acceptance Criteria[a] (°F)
		Available	Credited	Available	Credited	
Normal refueling[b] (non-transient condition)	24	2	2	1	0	150
Normal refueling[c] (anticipated operational transient condition)	24	1	1	1	0	175
Full core offload refueling[d]	24	2	0	1	1	145/175
Normal Operations[e] (non-transient/non-accident condition)	24	2	2	0	0	125
Normal Operations[f] (anticipated operational transient condition)	24	1	1	0	0	175
Normal Operations[g] (design basis LOCA condition)	24	2	1	0	0	125 (pre-accident) 175 (post-accident)

Table 9.1-6

Bounding Fuel Pool Cooling Events (Continued)
Performance Data

Table Notes:

[a] Outage-specific/Cycle-specific calculations are performed, as needed, to ensure acceptance criteria limits are maintained.

[b] A normal refueling does not involve a full core offload. The normal refueling temperature limits go into effect upon placing the plant in cold shutdown and remain in effect until plant start-up. The 150°F acceptance criterion is applicable for the case of both FPC loops available.

[c] A normal refueling does not involve a full core offload. The 175°F acceptance criterion is applicable for an anticipated operational transient of the loss of one FPC loop.

[d] A full core offload is a non-routine evolution. Although no single failure is postulated to occur during this evolution, only credit for RHR/FPC assist is taken. During this evolution, sufficient cooling is provided to maintain the fuel pool temperature at less than 145°F. The licensing basis limit is 175°F.

[e] Normal Operations is defined as any plant condition other than a refueling outage. The normal operation temperature limits become applicable upon plant start-up following a refueling outage. The 125°F value supports the initial (i.e., pre-accident) fuel pool temperature assumption in the design basis LOCA analysis.

[f] Normal Operations is defined as any plant condition other than a refueling outage. The 175°F value is applicable for an anticipated operational transient involving the loss of one FPC loop. If the fuel pool heat load is such that the resulting temperature transient exceeds 125°F, procedural guidance is in place to restore the fuel pool temperature to < 125°F.

[g] Normal Operations is defined as any plant condition other than a refueling outage. The 125°F and 175°F values support the initial fuel pool temperature assumption and the calculated peak fuel pool temperatures, respectively, in the design basis LOCA analysis. For this event, RCC is assumed to be lost and SW is manually aligned to the FPC system heat exchangers. An equilibrium temperature of 90°F is assumed for the SW.

Table 9.1-7

Tools and Servicing Equipment

Fuel Servicing Equipment	In-Vessel Servicing Equipment
Fuel preparation machines	Instrument strongback
New fuel inspection stand	Control rod grapple
Channel bolt wrenches	Control rod guide tube grapple
Channel handling tool	Fuel support grapple
Fuel pool sipper	Grid guide
Channel gauging fixture	Control rod latch tool
General purpose grapples	Instrument handling tool
Fuel bundle inspection fixture	Control rod guide tube seal
	In-core guide tube seals
Servicing Aids	Blade guides
Pool tool accessories	Fuel bundle sampler
Actuating poles	Peripheral orifice grapple
General area underwater lights	Orifice holder
Local area underwater lights	Peripheral fuel support plug
Drop lights	Fuel bail cleaner
Underwater TV monitoring system	Dummy fuel assembly
Underwater vacuum cleaner	Multi Lift Tool (MLT)
Viewing aids	
Light support brackets	Refueling Equipment
In-core detector cutter	Refueling equipment servicing tools
In-core manipulator	Refueling platform
Reactor Vessel Servicing Equipment	Storage Equipment
Reactor vessel servicing tools	Spent fuel storage racks
Steam line plugs	Channel storage racks
Shroud head bolt wrenches	In-vessel racks
Head holding pedestals	New fuel storage rack

Table 9.1-7

Tools and Servicing Equipment (Continued)

Reactor Vessel Servicing Equipment (Continued)	Under Reactor Vessel Servicing Equipment
Head stud rack	Control rod drive servicing tools
Dryer-separator sling	Control rod drive hydraulic system tools
Head strongback	Spring reels
Steam line plug/installation tool	Control rod drive handling equipment
Auxiliary work platform	Equipment handling platform
Head stud tensioner carousel/strongback	Thermal sleeve installation tool
	In-core flange seal test plug
	Keybender

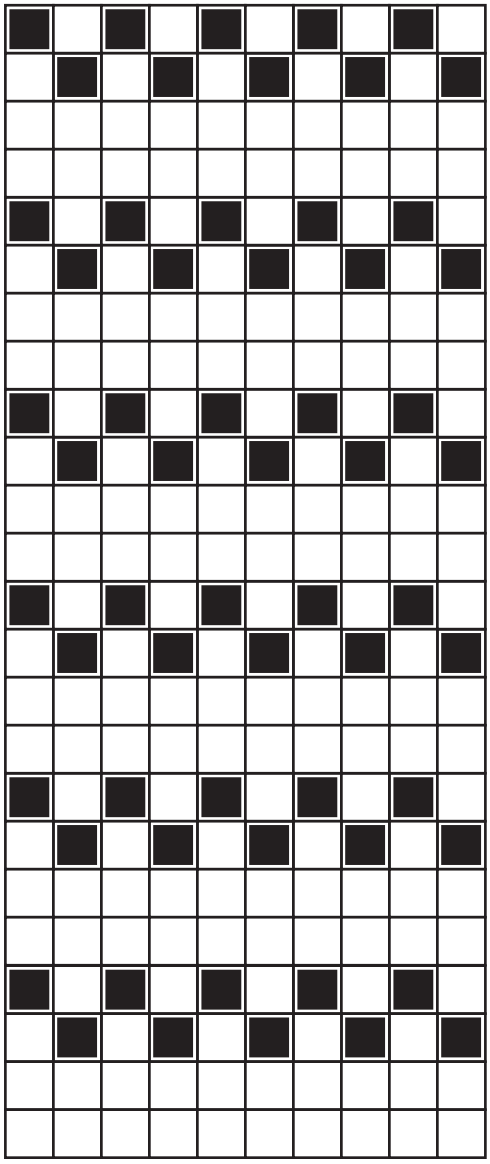

Fuel Location

Blocked Location

Columbia Generating Station
Final Safety Analysis Report

New Fuel Storage Vault Fuel Loading Pattern

Draw. No. 900547.33	Rev.	Figure 9.1-1

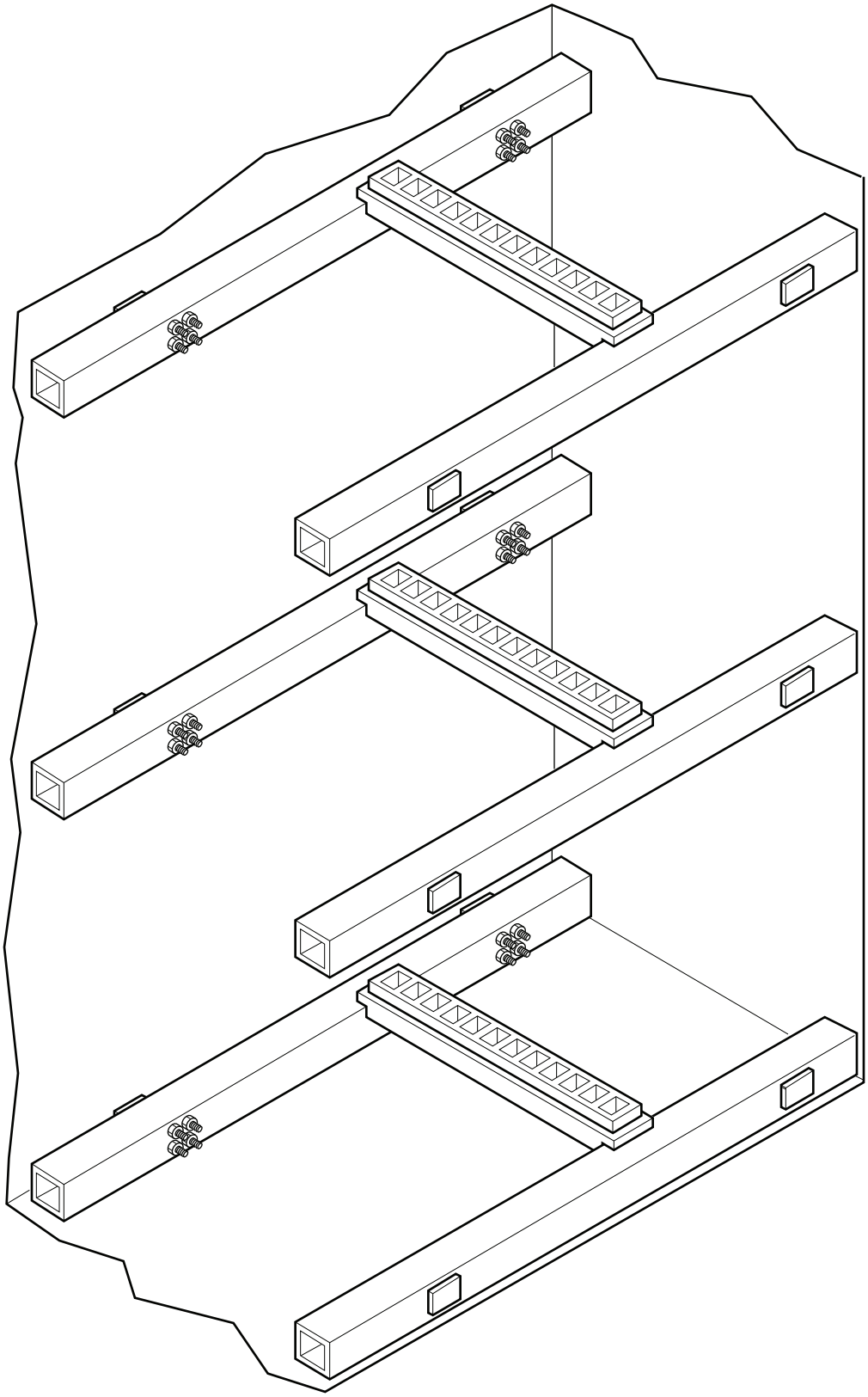

Columbia Generating Station
Final Safety Analysis Report

New Fuel Storage

Draw. No. 960690.63	Rev.	Figure 9.1-2

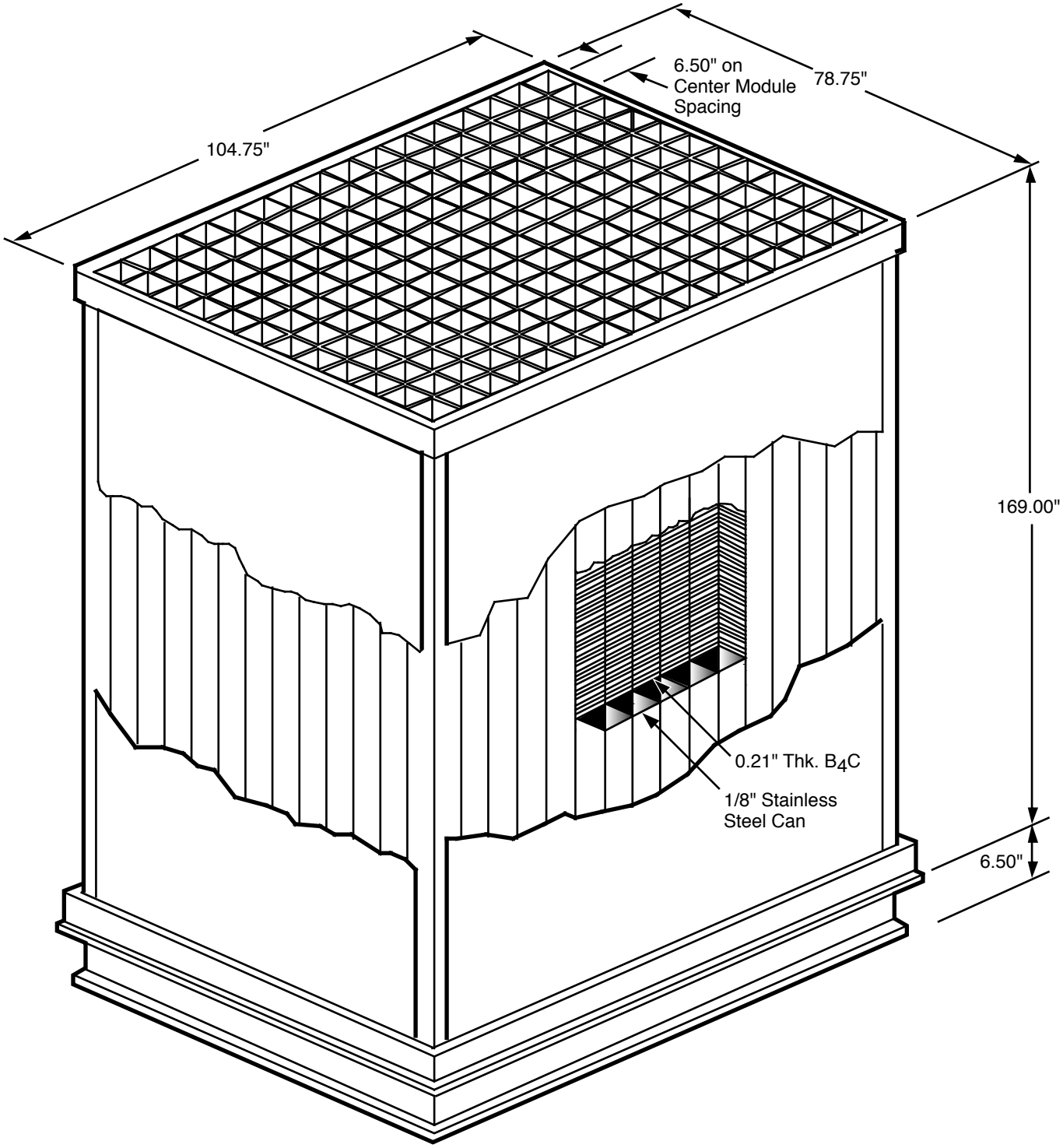

Columbia Generating Station Final Safety Analysis Report	Typical Spent Fuel Rack 12 x 16 Array		
	Draw. No. 960690.64	Rev.	Figure 9.1-3

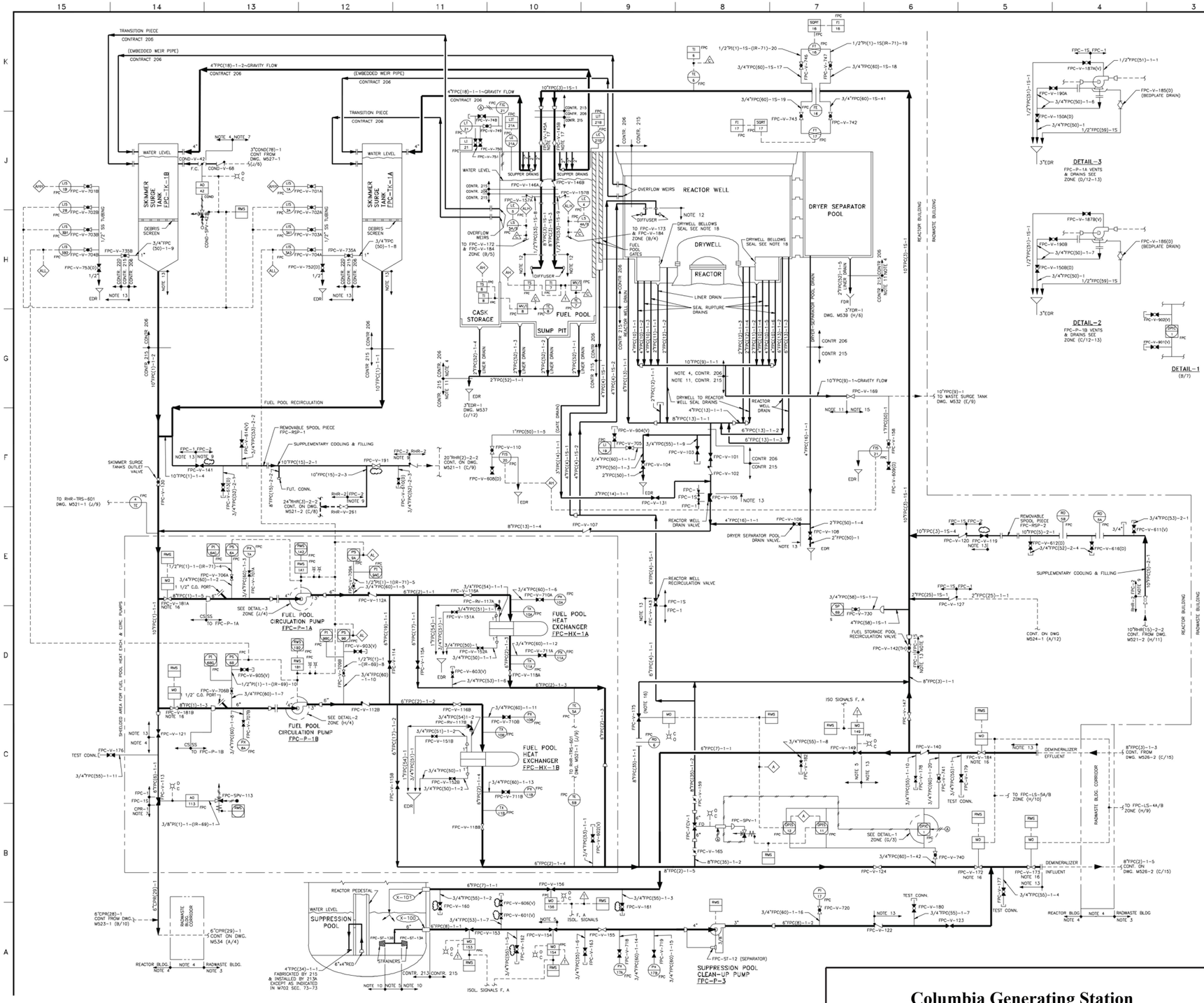

Columbia Generating Station
Final Safety Analysis Report

Fuel Pool Cooling and Clean-Up System

Draw. No. M526-1	Rev. 104	Figure 9.1-6.1

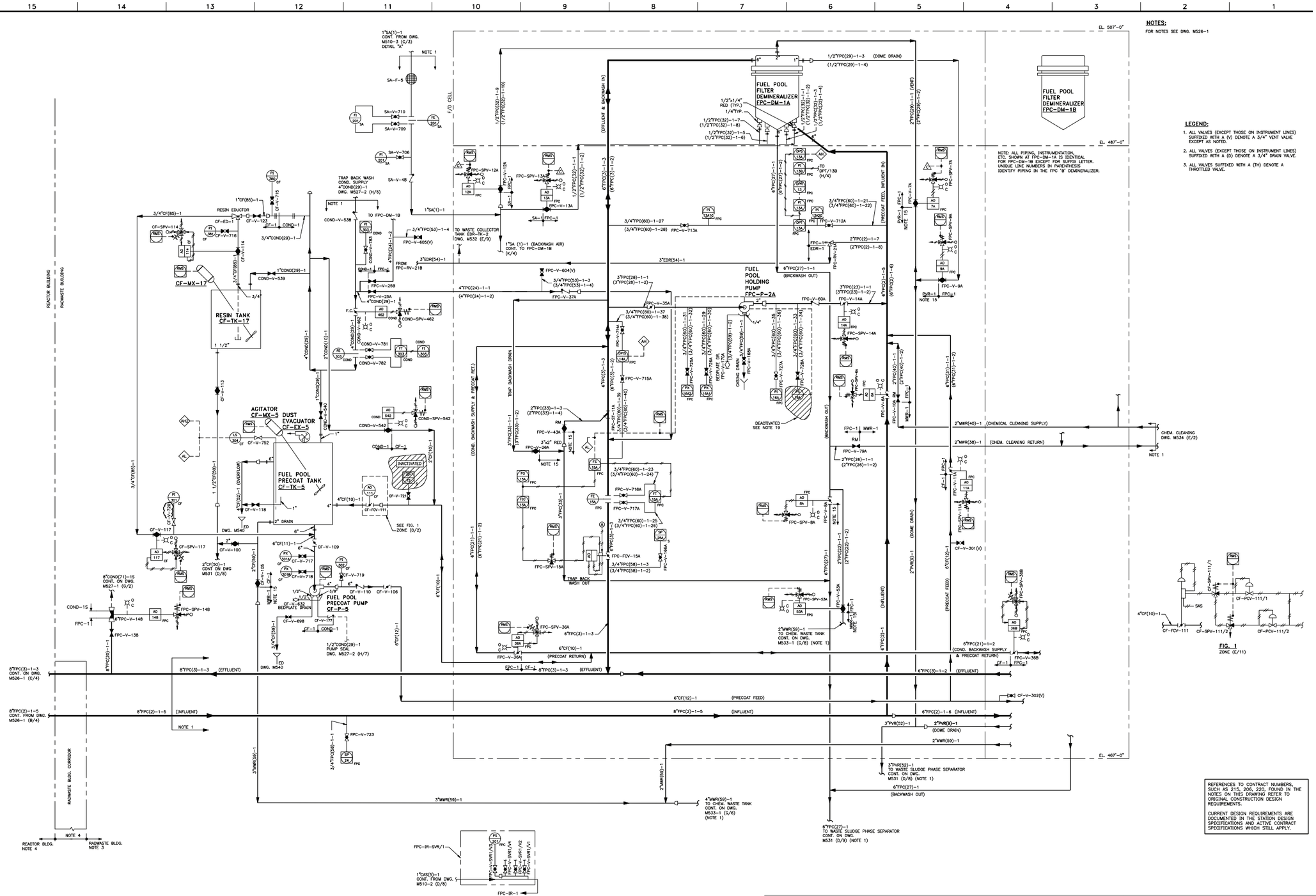

Columbia Generating Station
Final Safety Analysis Report

Fuel Pool Cooling and Clean-Up System

Draw. No. M526-2	Rev. 3	Figure 9.1-6.2

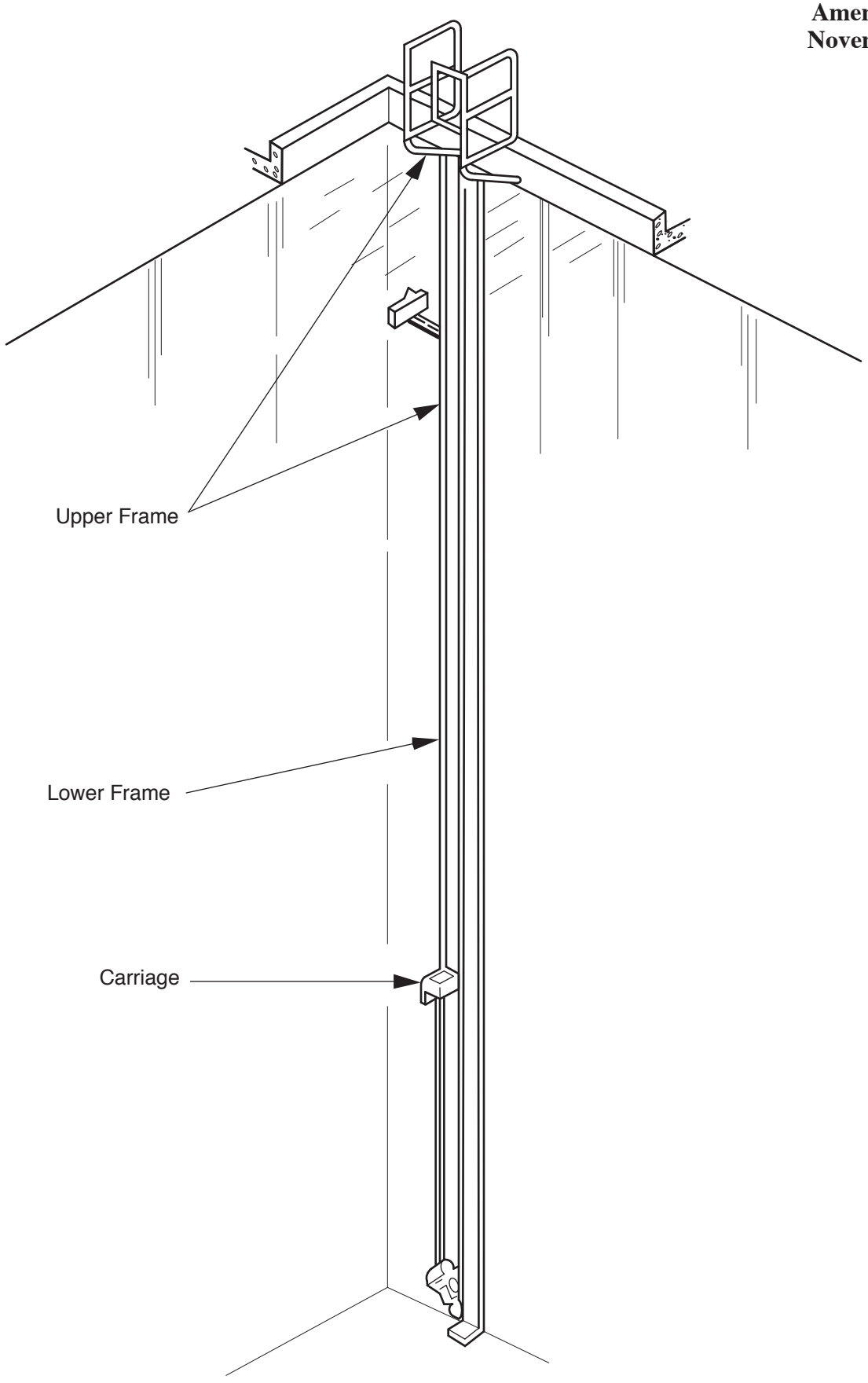

Columbia Generating Station Final Safety Analysis Report	**Fuel Preparation Machine Shown Installed in Facsimile Fuel Pool**		
	Draw. No. **960690.66**	Rev.	Figure **9.1-7**

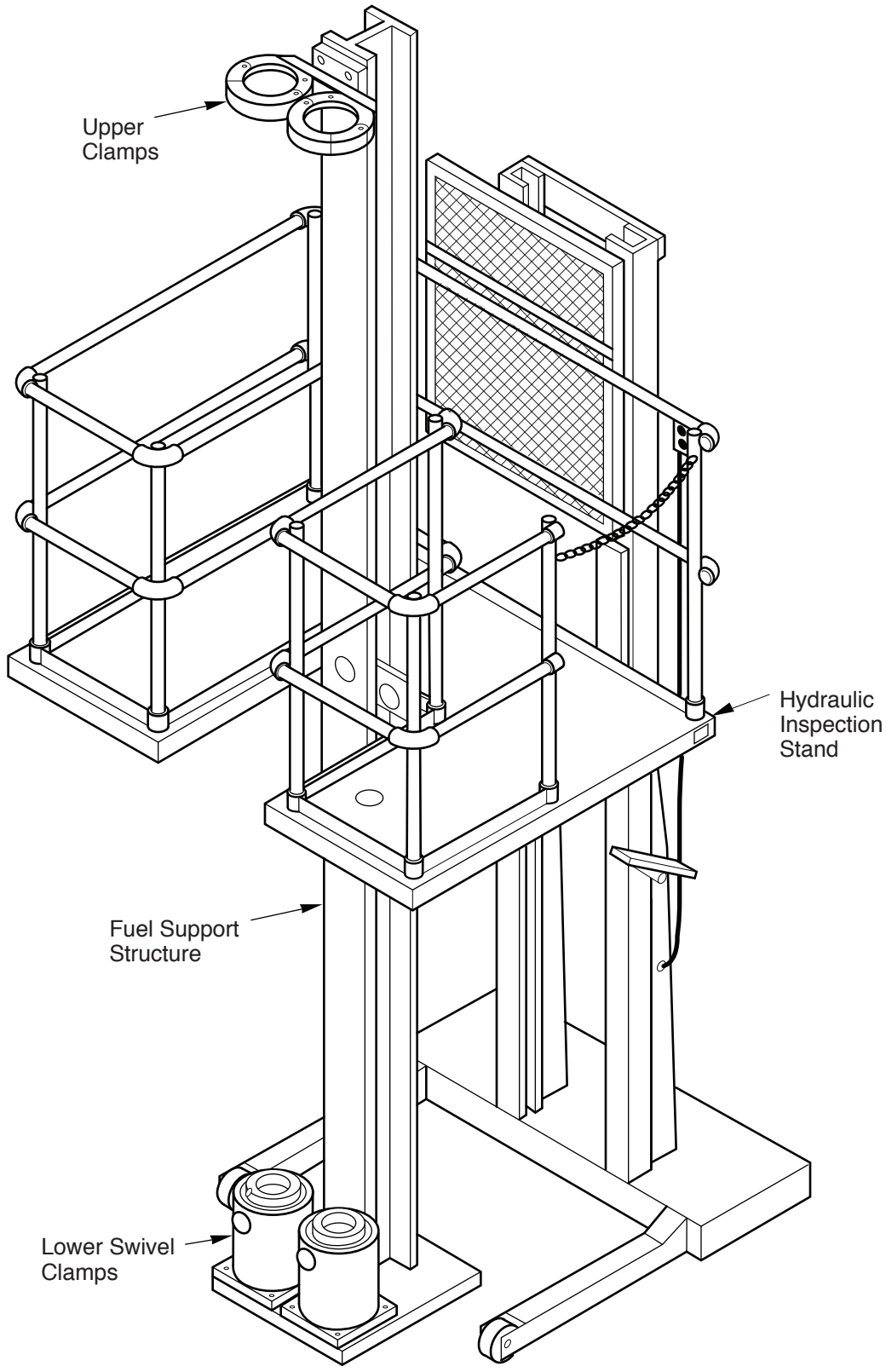

Columbia Generating Station
Final Safety Analysis Report

New Fuel Inspection Stand

Draw. No. 960690.68	Rev.	Figure 9.1-8

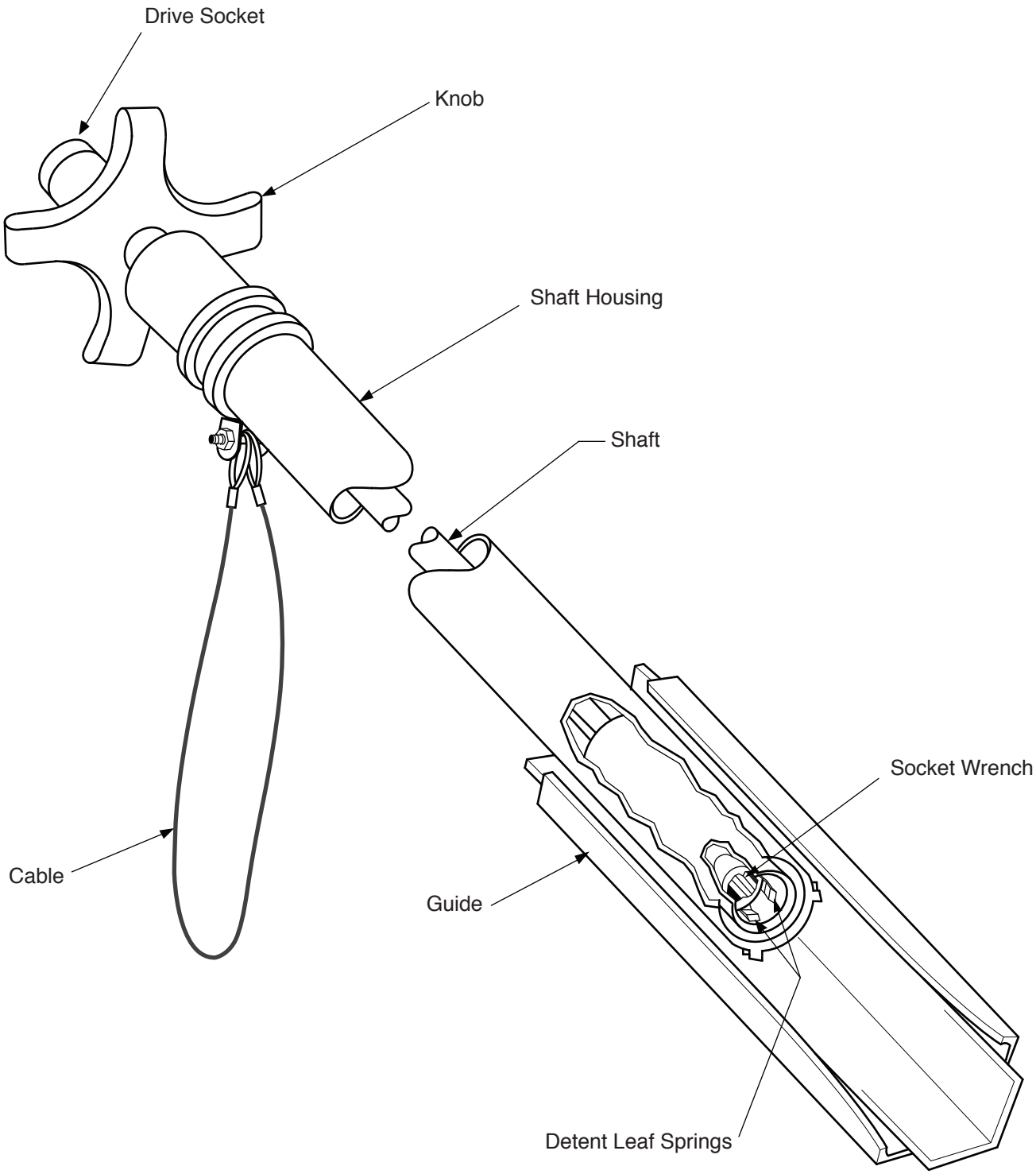

Channel Bolt Wrench

Columbia Generating Station
Final Safety Analysis Report

Draw. No. 960690.69	Rev.	Figure 9.1-9

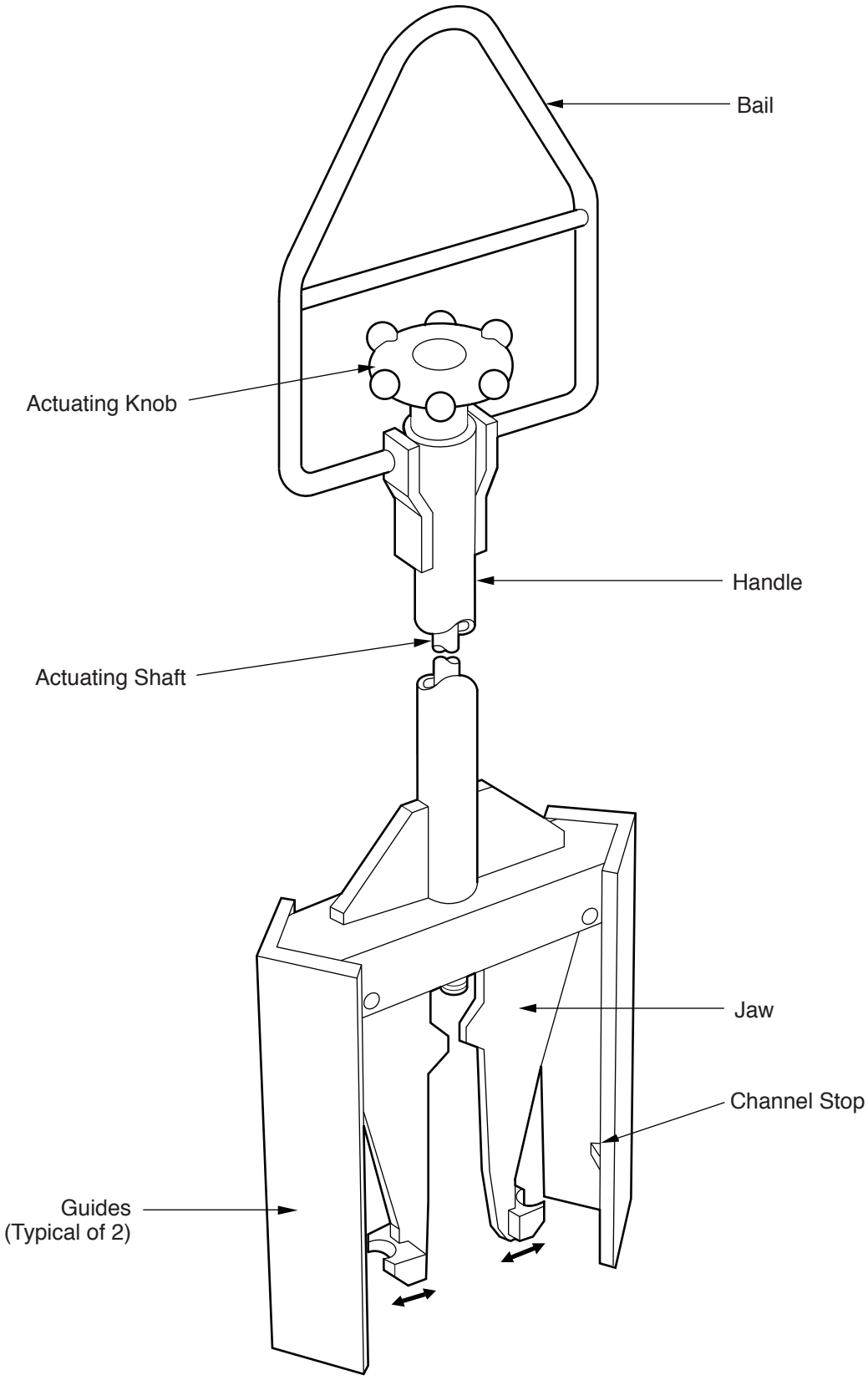

Columbia Generating Station
Final Safety Analysis Report

Channel Handling Tool

Draw. No. 960690.70	Rev.	Figure 9.1-10

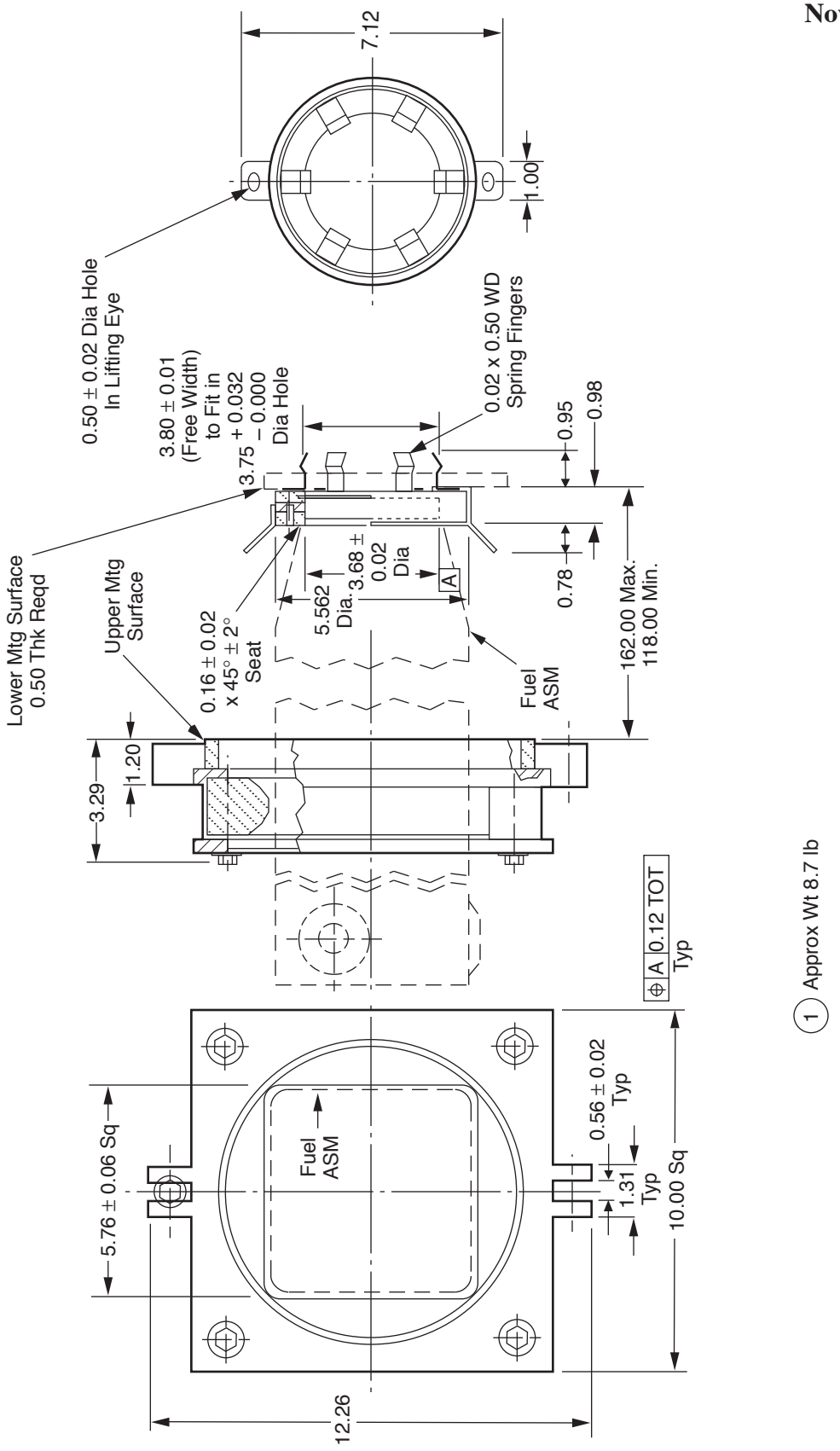

Columbia Generating Station Final Safety Analysis Report	**Fuel Inspection Fixture**		
	Draw. No. **960690.71**	Rev.	Figure **9.1-11**

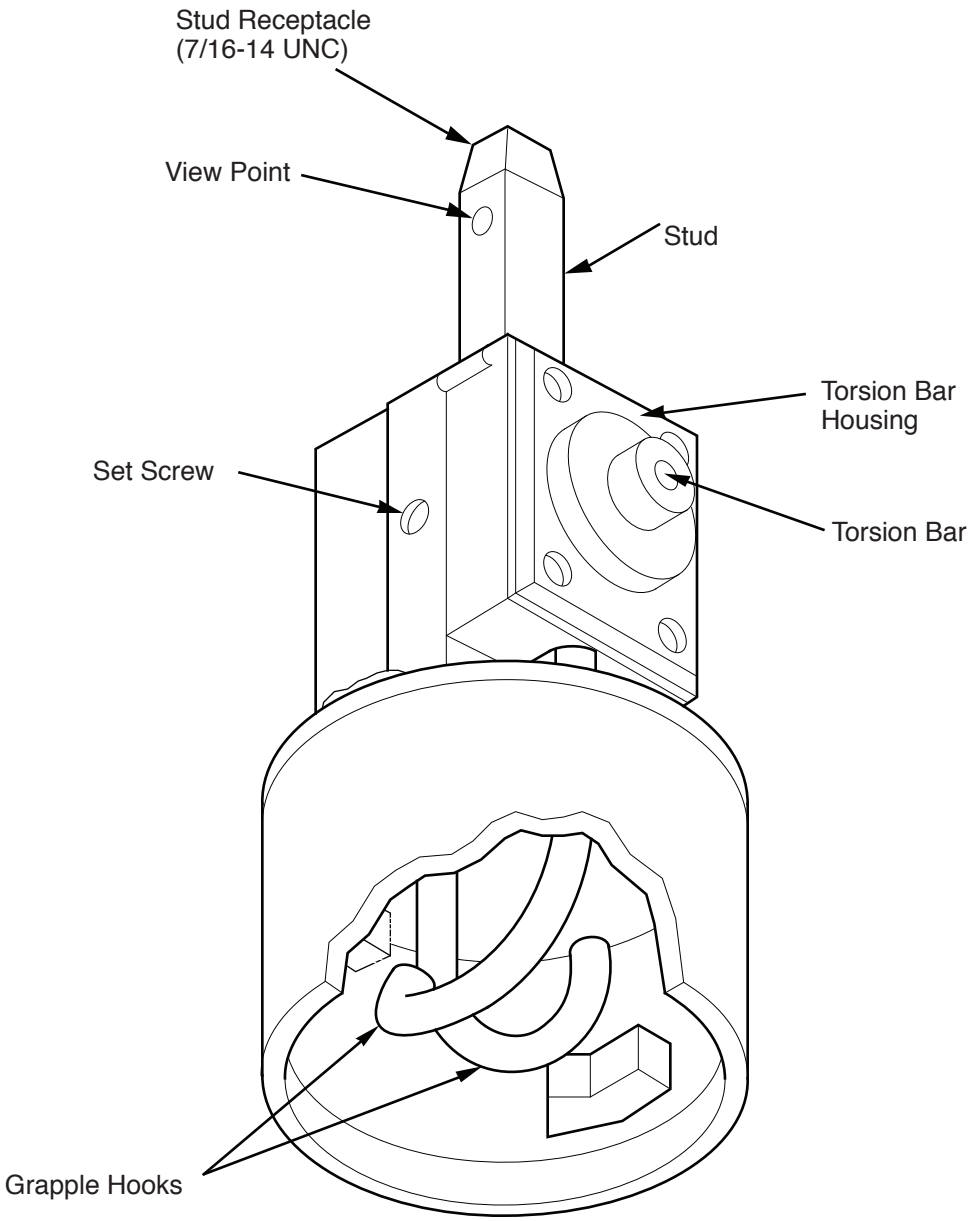

General Purpose Grapple

Columbia Generating Station
Final Safety Analysis Report

Draw. No. 960690.72	Rev.	Figure 9.1-12

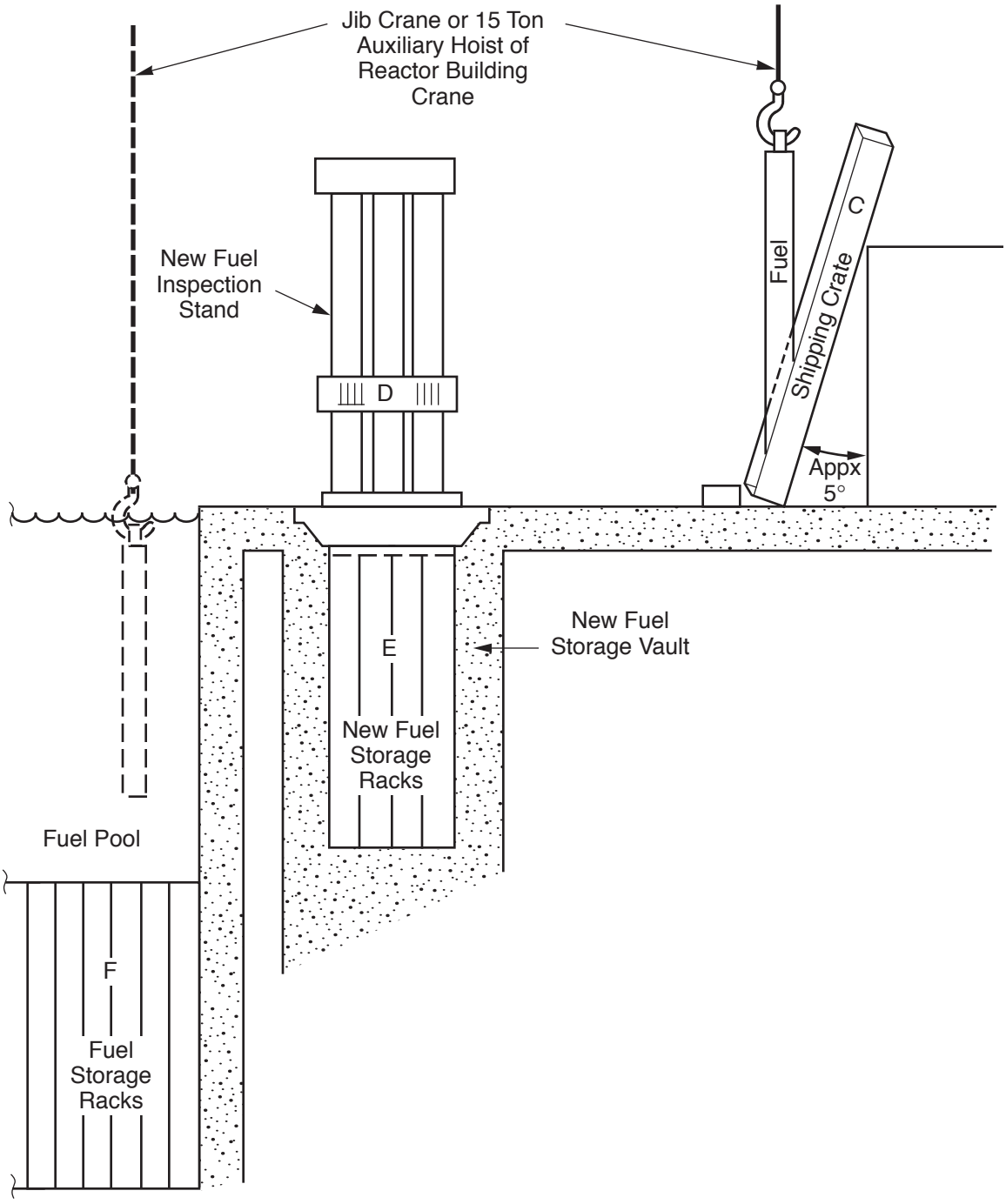

Columbia Generating Station **Final Safety Analysis Report**	**Simplified Section of New Fuel Handling Facilities (Section X-X)**		
	Draw. No. **960690.74**	Rev.	Figure **9.1-14**

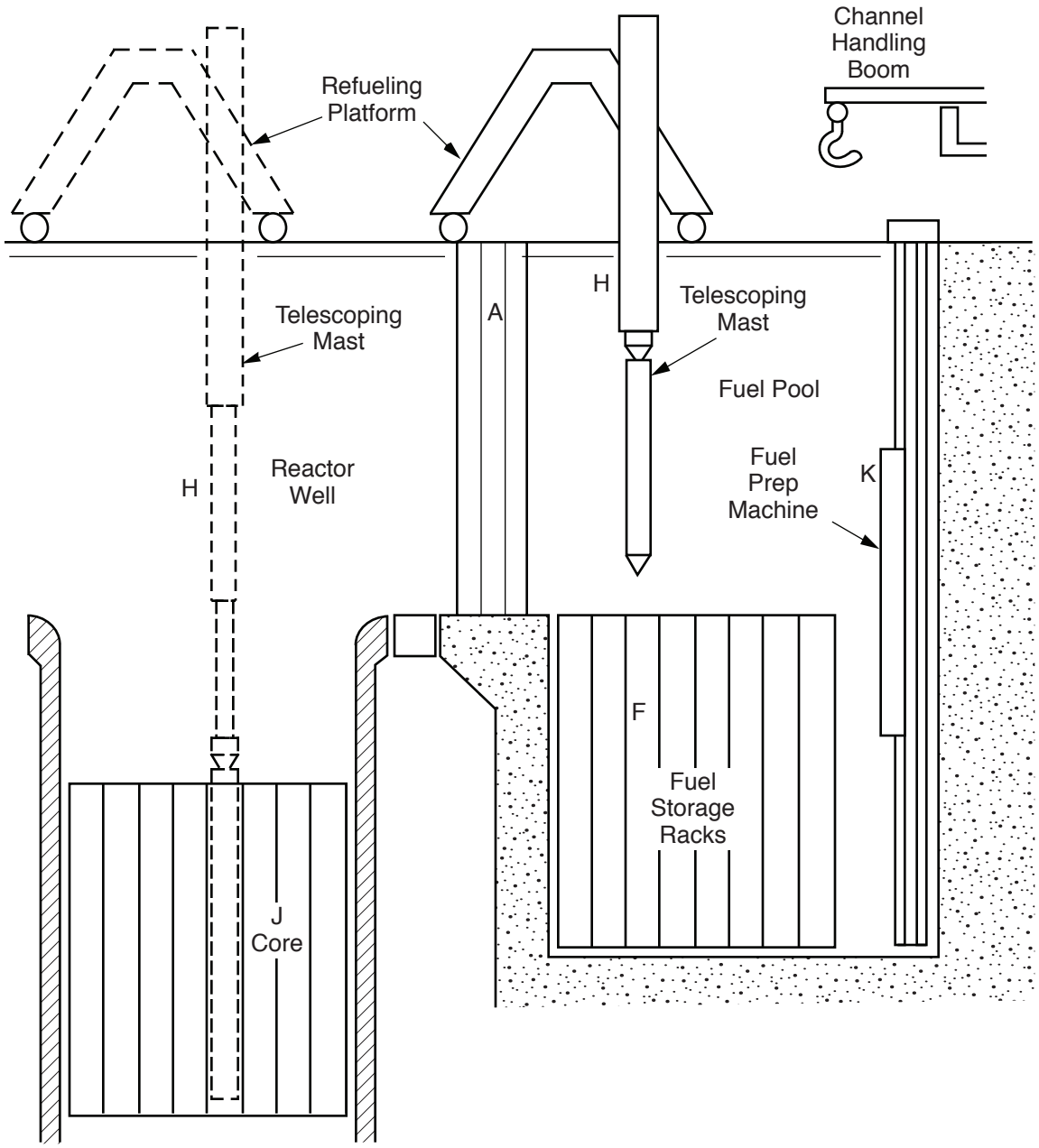

Columbia Generating Station
Final Safety Analysis Report

Simplified Section of Refueling Facilities (Section Y-Y)

Draw. No. 960690.67	Rev.	Figure 9.1-15

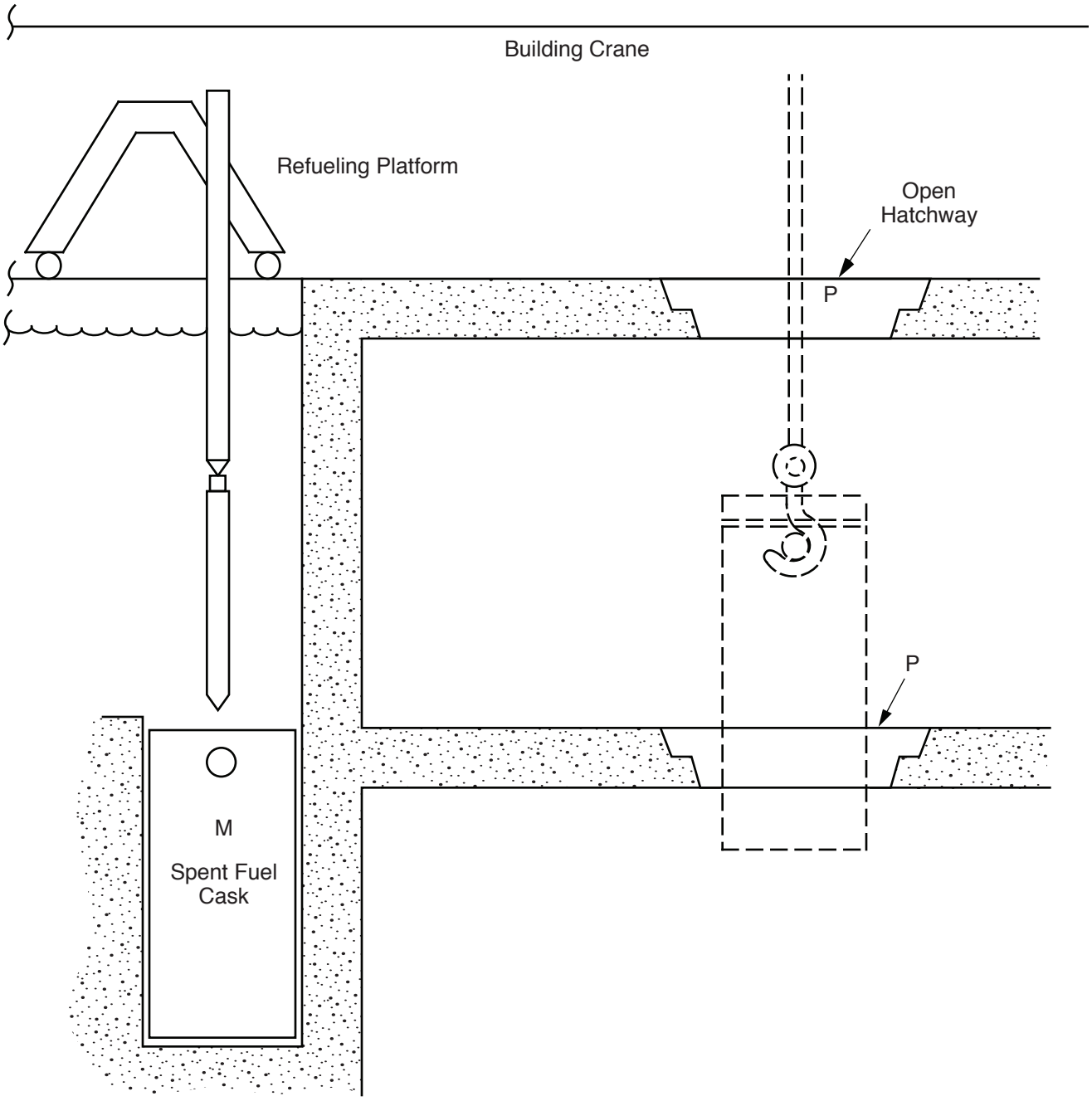

Columbia Generating Station **Final Safety Analysis Report**	**Simplified Section of Fuel Shipping Facilities (Section Z-Z)**		
	Draw. No. **960690.75**	Rev.	Figure **9.1-16**

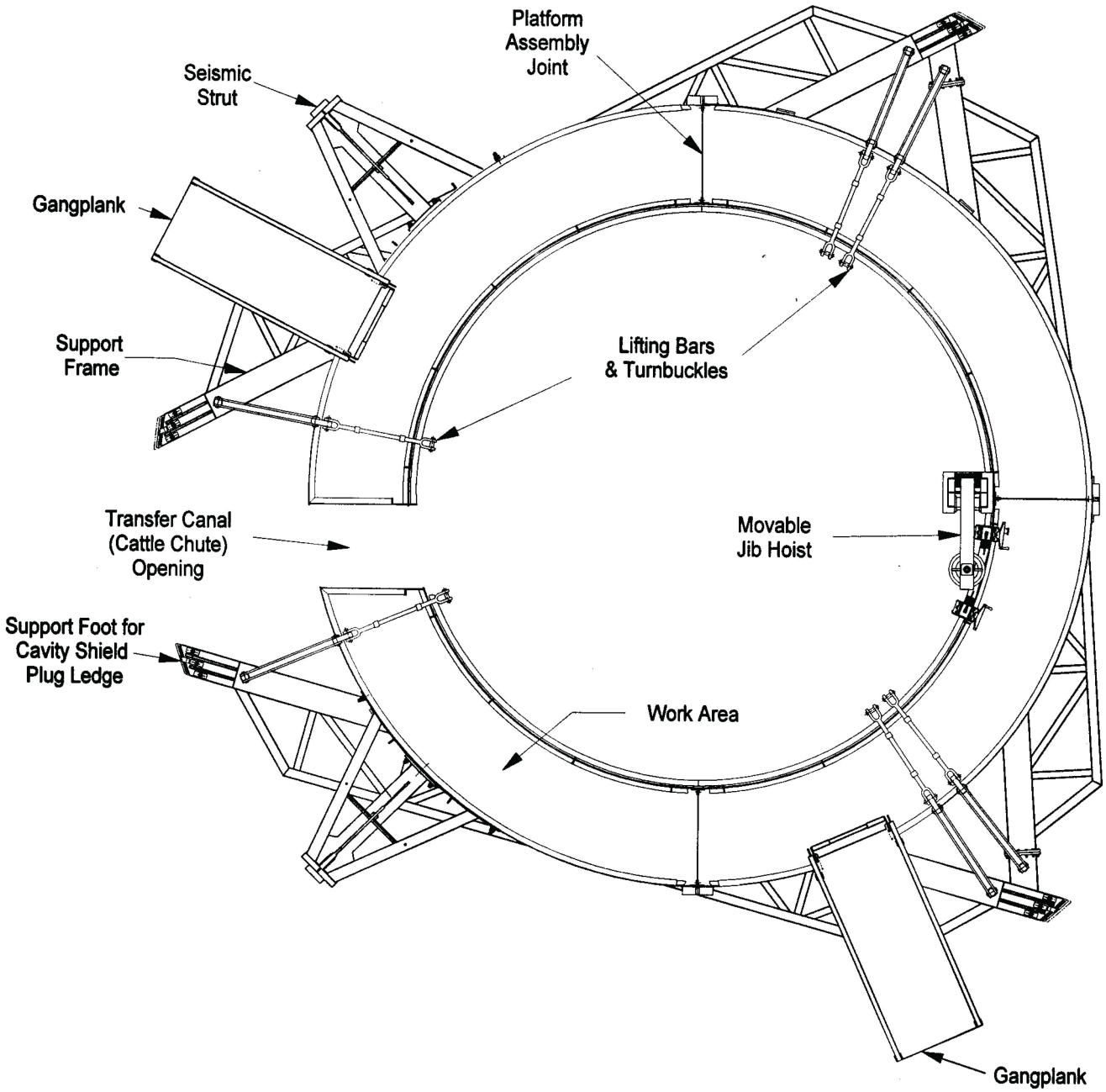

Columbia Generating Station Final Safety Analysis Report	Cavity In-Vessel Service Platform (CISP) Plan View		
	Draw. No. 910402.45	Rev.	Figure 9.1-17

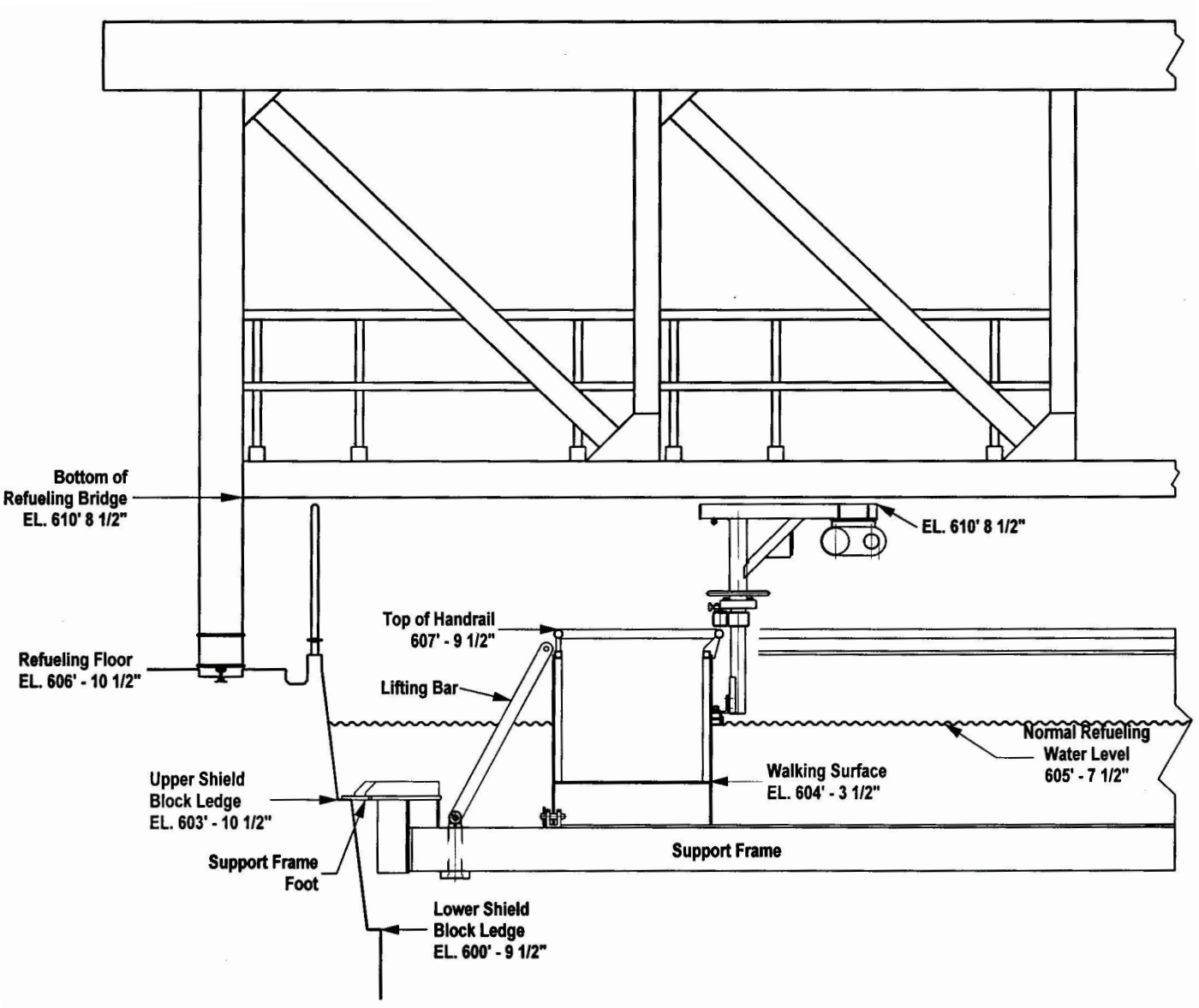

Columbia Generating Station **Final Safety Analysis Report**	**Cavity In-Vessel Service Platform (CISP) Sectional View**		
	Draw. No. 910402.44	Rev.	Figure 9.1-18

9.2 WATER SYSTEMS

9.2.1 PLANT SERVICE WATER SYSTEM

9.2.1.1 Design Bases

a. The plant service water (TSW) system is designed to provide cooling water for removal of heat rejected from auxiliary (nonessential) equipment, including turbine generator and reactor auxiliaries located throughout the plant, and

b. The plant service water system is designed to remove the maximum expected heat load of the equipment under normal operating conditions.

9.2.1.2 System Description

The plant service water system consists of two 100% capacity pumps (TSW-P-1A, TSW-P-1B) taking suction from the circulating water intake structure and supplying cooling water to equipment located throughout the plant (see Figure 9.2-1).

Plant service water is returned to the circulating water tunnel for heat removal by the circulating water system cooling towers.

The plant service water system is designed to function continuously during all modes of operation except during loss-of-coolant accident (LOCA) with loss of offsite power. Following loss of power under nonLOCA conditions, the plant service water pumps will be supplied from standby power buses (see Section 8.3.1.1.1). The plant service water radiation monitor is continuously recorded in the control room and will alarm if the water becomes contaminated except during loss of offsite power when plant service water will be manually monitored for radiation. The circulating water system blowdown line radiation monitor serves as backup (see Figure 10.4-4). On detecting radiation in the blowdown line, it automatically isolates the blowdown to the river except during plant outages as described in Section 11.5.2.2.2.4.

In addition to the biocide treated circulating water supply utilized by the plant service water system, the plant service water system is equipped with a biocide treatment system to retard biological growth. Additional chemical treatment capability is provided to minimize silt deposition, scale formation, corrosion, and consequent fouling of heat transfer surfaces.

Required makeup to the plant service water system is included as part of the overall circulating water system makeup requirements. The makeup flow can be directed in to the circulating water bay or to one or both of the plant service water pump suctions. This is accomplished by means of a weir box and sluice gate arrangement in the circulating water mixing bay (see Section 10.4.5).

Water for plant service water (TSW) pump 1B (TSW-P-1B) bearing lubrication and for both TSW pumps 1A and 1B (TSW-P-1A and TSW-P-1B) motor cooling is supplied from the plant service water pump during operation of the pump. This water is filtered before being injected to lubricate the bearings. The Fire Protection system provides TSW pump bearing lubrication water for initial system startup for TSW pump 1B (TSW-P-1B). The Fire Protection system also provides water for motor cooling of both TSW pumps 1A and 1B (TSW-P-1A and TSW-P-1B) during initial TSW system startup after both pumps have been secured (or tripped) (see F.2, Section F.2.4.1).

The plant service water system piping is designed in accordance with ANSI B31.1. The two service water pumps are designed in accordance with the Standards of the Hydraulic Institute, Centrifugal Pump Section.

9.2.1.3 Safety Evaluation

The operation of the plant service water system is not required to ensure any of the following conditions:

a. The integrity of the reactor coolant pressure boundary (RCPB),

b. The capability to shut down the reactor and maintain it in a safe shutdown condition, or

c. The ability to prevent or mitigate the consequences of accidents which could result in potential offsite exposures in excess of the guideline exposures of 10 CFR Part 100.

A single-failure analysis has not been provided for the plant service water system since this system serves only nonessential systems and is not required to perform a safety function. See Section 3.6 for a discussion of piping failures. The system, however, incorporates features that ensure continuity and reliability of operation. Plant service water pumps will be alternately operated to minimize wear, and the standby pump is available as a replacement during maintenance of the normally operating pump.

All piping, valves, and associated components of the plant service water system are classified Seismic Category II except in the reactor building and control building where system hangers are designed for Seismic Category I loads (seismic 1M).

9.2.1.4 Testing and Inspection Requirements

The components used in this system were tested and inspected at the manufacturer's plant for conformance with specifications. After installation, major components were checked and the system hydrostatically tested to ensure leak tightness prior to plant startup. Preoperational testing included testing of automatic controls for actuation at the proper setpoints, calibration

of instruments and alarms. Routine visual inspection of system components, instrumentation, and trouble alarms verify system operability and performance.

9.2.1.5 Instrumentation Requirements

Suitable alarms and indicators are provided to monitor and control the system throughout the system to allow the control room operator to take corrective action as required.

Each pump is manually started from the main control room. The standby pump is automatically started by actuation of a low pressure switch in the operating pump discharge line. The pressure at the discharge of each pump is indicated locally and also in the main control room. A pressure switch provides annunciation in the main control room on low pump discharge pressure signal.

9.2.2 REACTOR BUILDING CLOSED COOLING WATER SYSTEM

9.2.2.1 Design Bases

a. The RCC is designed to provide adequate cooling water to auxiliary plant equipment in the reactor and radwaste buildings during all normal modes of operation, and

b. The RCC is designed to provide a closed cooling water loop between nonessential systems which are potentially contaminated and the plant service water which is used for cooling. This loop provides an additional barrier between the potentially contaminated systems and the plant service water discharged to the circulating water system.

9.2.2.2 System Description

The RCC is a closed loop system which provides parallel-flow cooling to auxiliary equipment in the primary containment, the reactor building, and radwaste building. The system consists of pumps, heat exchangers, tanks, piping, valves, and instrumentation as shown in Figure 9.2-2. Each of the three pumps and three heat exchangers are half capacity based on maximum normal cooling requirements. Heat is removed from the RCC system by the plant service water system. The plant service water is passed through the tube side of the RCC heat exchangers and the closed-loop water is passed through the shell side. A 550-gal surge tanks accommodates volume changes from thermal expansion and contraction. Makeup water to the system is supplied to the surge tank by the demineralized water system.

The RCC cools the following equipment:

a. Reactor recirculation pumps,
b. Drywell fan unit cooling coils,
c. Drywell equipment drain condenser,

d. Reactor water cleanup (RWCU) nonregenerative heat exchangers,
e. Reactor building equipment drain heat exchanger,
f. Control rod drive pumps,
g. Fuel pool heat exchangers,
h. RWCU recirculating pumps, and
i. Offgas glycol refrigeration machines.

The RCC piping inside primary containment is constructed in accordance with ASME Section III, Class 3, and Seismic Category II requirements. The RCC piping outside of primary containment is constructed in accordance with ANSI B31.1. In the reactor building and inside primary containment, RCC piping is supported to Seismic Category I. In the radwaste building, RCC piping is supported to Seismic Category II requirements. System primary containment penetrations and isolation valves are constructed to Seismic Category I, and ASME Code Section III, Class 2, requirements. The RCC pumps are constructed to Seismic Category II, and RCC heat exchangers are constructed to ASME Code Section VIII and the Standards of the Tubular Exchanger Manufacturers Association, Class R. The system design pressure is 195 psig. The design temperature is 150°F for all piping except the RWCU nonregenerative heat exchanger discharge piping. The piping from the RWCU heat exchanger to the 18-in. return line has a design temperature of 175°F. The system operates at pressures and temperatures below the stated design values.

Equipment Design Parameters

Closed Cooling Water Pumps (RCC-P-1A, RCC-P-1B, RCC-P-1C)

Quantity	3
Driver	200 hp motor - ac
Design capacity	2500 gpm
Head	200 ft
Speed, rpm	1775

Closed Cooling Water Heat Exchangers (RCC-HX-1A, RCC-HX-1B, RCC-HX-1C)

Quantity	3
Heat duty	25×10^6 Btu/hr

	Shell side	Tube side
Flow rate	2500 gpm	3333 gpm
Inlet temperature	115°F	85°F
Outlet temperature	95°F	100°F
Pressure drop	11.2 psig	5.0 psig

A chemical addition tank (RCC-TK-2) and metering pump (RCC-P-2) were included in the original design for the addition of corrosion inhibiting chemicals if required. This chemical addition equipment is not normally used.

The RCC pumps supply water to the specified auxiliary plant equipment during all modes of operation except under LOCA conditions. Following loss of normal power and under nonLOCA conditions, the RCC pumps are supplied from standby power.

9.2.2.3 Safety Evaluation

The RCC provides a barrier between nonessential, potentially contaminated systems, and the plant service water discharged to the circulating water system. A radiation monitor is provided in the RCC to detect inleakage to this system from any contaminated system. Leakage is also detected by pressure instrumentation in the system supply headers or by monitoring system surge tank level.

Portions of the RCC which penetrate the primary containment are provided with containment isolation valves which can be remotely actuated by the operator in the main control room and close automatically on the high drywell pressure (F) and the reactor vessel low water level (A) containment isolation signals.

A pressure bypass line exists around the inboard isolation valve on the return line to prevent overpressurization of the piping between the inboard and outboard isolation valve. The bypass line has a check valve that acts as an inboard isolation valve in parallel with the normal inboard isolation valve.

A single-failure analysis has not been provided for the RCC since this system serves only nonessential systems and is not required to perform a safety function. See Section 3.6 for a discussion of piping failures.

9.2.2.4 Testing and Inspection Requirements

Pumps in the RCC are proven operable by their continuous use during normal plant operation. The motor-operated isolation valves are tested to ensure that they are capable of opening and closing by operating manual switches in the main control room and observing the position lights. The check valve in the bypass line across the inboard isolation valve on the return line is tested to ensure that it is capable of opening and closing by manual means during an outage. Routine visual inspection of the system components, instrumentation, and trouble alarms is adequate to verify system operability.

9.2.2.5 Instrumentation Requirements

The RCC is a balanced constant-flow system. Local pressure and temperature gauges and test points are provided throughout the system. Temperature in the primary containment is transmitted to the main control room, as is pressure downstream of the closed cooling water heat exchangers. A temperature switch downstream of the heat exchangers actuates an alarm in the main control room on high water temperature. When an operating pump trips, the standby pump is automatically brought on line. Alarms are actuated in the main control room following a decrease in pressure sensed by pressure switches on each pump discharge.

The system water volume is maintained from the plant demineralized water system by a level control valve actuated by level switches in the surge tank.

9.2.3 PLANT MAKEUP WATER TREATMENT AND DEMINERALIZED WATER SYSTEMS

9.2.3.1 Design Basis

a. The plant potable water system provides the supply water for the plant makeup water treatment system. A vendor furnished and maintained trailer-mounted demineralizer provides the purified water to the demineralized water system using the potable water source.

b. The demineralized water system is designed to utilize the demineralized effluent from the plant makeup water treatment system to provide demineralized water to the condensate storage tanks and to distribute demineralized water throughout the plant.

9.2.3.2 System Description

9.2.3.2.1 Plant Makeup Water Treatment System

The plant makeup water treatment system is shown in Figure 9.2-3. Raw water is normally supplied from the Columbia River through a branch line of the tower makeup system (TMU). From this line a branch is routed to the service building basement and is isolated. Another branch line continues to pump house 3, where raw water is processed into potable water. Here the water is chemically deflocculated and transferred to a 300,000-gal potable water storage tank. Sodium hypochlorite is injected into the potable storage tank influent line. In case the TMU is temporarily not in service, water is supplied from a cross tie with the WNP-1 potable water system.

The trailer-mounted demineralizer is supplied with water from the potable water pump PWC-P-103 which runs continuously. Demineralized water is pumped from the trailer demineralizer to tank DW-TK-1 in the basement of the service building through a tank level control valve.

Demineralized water is stored in a 50,000-gal epoxy-lined carbon steel demineralized water storage tank (see Figure 9.2-4 and Section 9.2.3.2.2).

The effluent from the trailer-mounted demineralizer is continuously recorded with associated alarms.

9.2.3.2.2 Demineralized Water System

The demineralized water system shown in Figure 9.2-4 consists of a 50,000-gal steel, epoxy-lined storage tank (DW-TK-1) with two 200-gpm transfer pumps with a 265-ft head (DW-P-1A, DW-P-1B). Among the components being supplied by the pumps are the following:

a. Condensate storage tanks,
b. RCC surge tank,
c. Diesel generator expansion tanks,
d. Auxiliary boiler condensate return tanks,
e. Chemical addition tanks,
f. Stator cooling makeup,
g. Refueling floor service boxes,
h. Decontamination facilities,
i. Flushing and washdown services,
j. Sealing water,
k. Laboratory water,
l. Reactor containment services,

m. Instrument flushing water, and
n. CJW surge pipe.

During operation one demineralized water transfer pump runs continuously to keep the system headers pressurized to supply demineralized water on demand. The operating pump recirculates a minimum flow back to the storage tank to prevent damage to the pump under low flow conditions.

9.2.3.3 Safety Evaluation

The demineralized water and plant makeup treatment systems are not required for a safe shutdown of the plant and are therefore, not safety related. A failure of these systems will not affect the operation of systems that are vital to safe shutdown of the plant. Alarmed instrumentation is provided to prevent delivery of out-of-specification water to safety-related systems or components. The piping associated with the demineralized water and plant makeup water treatment systems is designed in accordance with ANSI B31.1 except for piping that penetrates containment is designed ASME III, Class 2. All demineralized water and plant makeup water treatment system piping is classified Seismic Category II except that piping penetrating or routed inside primary containment, which is classified Seismic Category I. In the reactor and diesel generator buildings and inside primary containment, piping is supported to Seismic Category I requirements.

9.2.3.4 Testing and Inspection Requirements

The demineralized water and plant makeup water treatment systems are in daily use and as such do not require periodic testing to ensure operability. Grab samples are periodically tested in the laboratory to verify filter and demineralizer performance and to ascertain stored water quality. Periodic visual inspection and preventive maintenance are conducted.

The major components of these systems were subject to manufacturer shop tests including performance and hydrostatic tests.

Prior to initial operation the piping systems were subject to a hydrotest in accordance with their respective code groups. In addition, the completed systems were subjected to acceptance testing during plant startup as discussed in Section 14.2.

9.2.3.5 Instrumentation Requirements

Instrumentation and controls for the plant makeup water treatment and demineralized water systems are provided to control and monitor the operation of each of the subsystems.

Level controls in the demineralized water storage tank maintain the tank at the proper level by opening and closing a valve in the makeup demineralizer discharge piping.

9.2.4 POTABLE WATER AND SANITARY DRAIN SYSTEMS

9.2.4.1 Design Bases

The function of the potable water system is to supply potable water throughout the plant, provide supply water to the plant makeup water treatment system, and can be used to supply makeup water to the spray ponds.

The potable water system is designed to provide cold and/or hot water to the points of potable water usage such as lavatories, urinals, toilets, showers, eyewashes, sinks, electric drinking water coolers located in the various plant buildings, and site grounds irrigation.

The sanitary waste system is designed to drain the noncontaminated sanitary waste from the various buildings served.

All system fixtures, piping, and component material, as well as the fabrication, erection, and testing comply with applicable sections of appropriate codes and standards.

The potable water storage tank is designed and constructed in accordance with ASME Section VIII and Seismic Category II requirements.

9.2.4.2 System Description

9.2.4.2.1 Potable Water System

The potable water system is shown in Figure 9.2-5. Water is supplied to the potable water storage tank (PWC-TK-1). The makeup water treatment system is described in Section 9.2.3. The potable water tank is located in the basement of the service building from which potable water is pumped to all buildings serviced.

Potable hot water is provided to the various plant buildings by individual electric hot water heaters.

9.2.4.2.2 Sanitary Drain System

The plant sanitary waste system is shown in Figure 9.2-6. All noncontaminated sanitary waste from all buildings is directed into this system. Potentially contaminated drainage, such as that from the radiochemical laboratory sinks, is routed to the radioactive drainage system as described in Section 11.2.

All sanitary drains in the plant are collected into a main 6-in. sewage header which leaves the plant building complex, below grade, from the service building. All waste lines are vented to

the atmosphere via roof vents in accordance with applicable codes except those in the reactor building, which are vented to the main reactor building exhaust system (see Section 9.4.6) and in the main control room are vented to the main control room exhaust system.

All sanitary lines drain by gravity flow into the main 6-in. sewage pipe which connects to an 8-in. line leading to a centrally located sanitary waste treatment facility (SWTF) serving WNP-1, Columbia Generating Station (CGS), WNP-4, the Kootenai Building (Plant Support Facility), and the Department of Energy's 400 Area (FFTF facility). Low levels of radioactive materials, particularly tritium from the 400 Area, are expected to be present in the treatment facility as a result of processing these waste streams. The SWTF is permitted and regulated by the State of Washington and is not part of the CGS licensing basis. Therefore, the radioactive material from FFTF is not considered to be licensed material.

9.2.4.3 Safety Evaluation

The potable water and sanitary drain systems are of conventional design and have no safety function. All contaminated drains are routed to the liquid radwaste system as discussed in Section 11.2. All system piping except that in the reactor building and control building is Seismic Category II as defined in Section 3.2.1. The piping in the reactor building and control building is Seismic Category I.

9.2.4.4 Testing and Inspection Requirements

Routine monitoring during normal operation verifies the system is performing acceptably.

9.2.4.5 Instrumentation Requirements

The system is provided with sufficient instrumentation and controls to monitor and operate the system to meet the normal operating requirements of the facility.

9.2.5 ULTIMATE HEAT SINK

9.2.5.1 Design Bases

a. The ultimate heat sink (UHS), a spray pond system, supplies cooling water to remove heat from all nuclear plant equipment that is essential for a safe and orderly shutdown of the reactor and to maintain it in a safe condition;

b. The UHS is capable of accomplishing its safety function for a normal cooldown or an emergency cooldown following a LOCA without the availability of offsite power. The sink provides this cooling capability for a period of 30 days without outside makeup (except following a tornado). Provisions are made for replenishment of the sink to allow continued cooling capability beyond the initial 30-day period. The sink will accomplish its safety function despite the

occurrence of the most severe site-related natural events including earthquake, tornado, flood, or drought; and

c. Regulatory Guide 1.27 compliance is described in Section 1.8.

9.2.5.2 System Description

During all normal operating conditions, including normal shutdown as well as emergency conditions, waste heat from the reactor auxiliaries is transferred to the UHS by the standby service water (SW) system.

The UHS consists of two concrete ponds. The concrete ponds provide suction and discharge points for the redundant pumping and spray facilities of the SW system. The pond and pump house arrangements are shown in Figure 9.2-7. The ponds and pump houses are designed to Seismic Category I requirements. Standby service water loop A draws water from pond A, cools the Division 1 equipment required for safe shutdown, and discharges through a spray ring into pond B for heat dissipation. Similarly, SW loop B draws water from pond B, cools Division 2 equipment, and discharges through a spray ring into pond A. The high-pressure core spray (HPCS) SW system draws water from pond A, cools Division 3, and discharges without spray into pond A. A siphon between the ponds allows for water flow from one pond to the other.

The spray system illustrated in Figure 9.2-7 consists of two annuli of spray trees, one for each of the SW subsystems. Each annulus is 140.0 ft in diameter and contains 32 spray trees equally spaced (13.75 ft between vertical centerlines) on the circumference. The vertical trees are serviced by the annulus water pipe, 20 in. in diameter, mounted above the water level. The annulus pipe is fed by the main header from each respective pump house. Each spray tree consists of a vertical riser pipe or trunk 8 in. in diameter and horizontal limbs of 1.5-in. pipe. The limbs are attached to the riser at 2 ft-8 in. intervals of heights and are rotated at 90 degree subsequent angles from each other so that the arms resemble a counterclockwise helix with increasing height. The arms radial to the annulus are 4 ft-6-7/16 in. long. The lowermost arm is a tangent arm. The arms tangent to the annulus pipe are 3 ft-6 in. long. Spray nozzles are located at the end of each arm and are connected by fittings. The orientation of every nozzle is radially inward with an angle of 55 degrees upward from horizontal. The nozzles are 1-1/2-CX-27-55 Whirljet nozzles supplied by Spraying Systems Company. Since each tree nozzle is located at a different elevation, each nozzle pressure is different. The uppermost nozzle water pressure is approximately 17 psig, and the total water flow from a tree is approximately 300 gpm.

The HPCS SW flow is treated as a straight heat dump in the thermal analyses.

The combined water volume of the spray ponds is adequate to provide cooling water for 30 days without makeup. Although the ponds are not routinely used for cooling during normal

operation, some small losses are to be expected due to normal evaporation from the surface, minor leakage from the ponds, and occasional blowdown needed to maintain water chemistry. A gravity makeup line is provided from the circulating water pump house to the spray ponds; however, the required pond level will normally be maintained by makeup directly from the TMU water pumps (see Section 10.4.5) or directly from the potable water system. The TMU is the makeup source credited in the event of water loss due to a tornado. Design parameters for the spray pond are given in Tables 9.2-1 and 9.2-2.

An SW pump is located in each spray pond pump house along with its associated equipment so that an accident, such as a fire or pipe break associated with one pump, would not affect the operation of the redundant pump.

The bottom of the pump sump is depressed below the pond bottom. This ensures that there is still sufficient submergence for the pumps at the lowest possible water level in the pond. A sand trap and screen precede the pump sump to prevent heavy debris from entering the pump sump area. A skimmer wall and fixed screen prevent floating debris from entering the pumps.

A spray ring bypass is provided that allows water to be returned directly to the pond through use of manually operated dump and spray ring isolation valves. This allows pond temperature to be controlled during cold weather operations, mixing of the pond volumes, minimization of drift losses, and other situations where bypass of the spray rings is desirable. If the spray ring header is bypassed, it will be realigned to allow spray mode of operation before pond temperature exceeds 70°F. Analysis demonstrates that at pond temperatures less than or equal to 70°F, sufficient time is available under accident conditions to permit realignment to the spray mode prior to pond temperature exceeding 77°F.

To prevent adverse operation during freezing weather, all SW piping and components are either below the frost line, within heated buildings, heat traced or drained when not in use.

To allow for infrequent maintenance of the spray pond piping and piping supports, a cross connection, consisting of a removable spool piece and two isolation valves, is available between the two redundant loops of SW. A removable siphon plug is available to prevent one pond siphoning to the drained pond. The cross connecting spool piece and siphon plug are normally not installed and are only used while the plant is shut down for refueling. This cross connection allows water to be pumped back directly to the pond from which it was removed, thus allowing for the other pond to be drained.

9.2.5.3 Safety Evaluation

An oriented spray cooling system (OSCS) is utilized for cooling the water inventory of the UHS. The OSCS was developed as a result of intensive analytical studies and experimental verification over a period of more than 6 years. Details of the OSCS experimental and

analytical developmental efforts are described in Topical Report, Oriented Spray Cooling System (OSCS) for Ultimate Heat Sink Application (UHS), I-R 100, which has been submitted for Nuclear Regulatory Commission staff review.

The thermal performance model is based on the correlation of the Canadys test data described in Section 3.1 of the Topical Report, I-R 100. The resulting KAV/L for this application is 2.66. This includes a 10% derate of the KAV/L to cover conservatively the data scatter experienced at Canadys. Since the KAV/L represents the performance of the specified geometry and nozzle pressure, the KAV/L combined with the meteorological data are sufficient to determine the system cooling performance. The performance predicted by this model is modified as shown below.

$$CR = (-0.761 + 0.009 \times TWB) + (0.2677 + 0.004029 \times TWB) \times CP + (0.001179 - 7.14 \times 10^{-6} TWB) \times CP^2$$

CR = cooling range
TWB = wet bulb temperature
CP = cooling potential

The system model for both the thermal performance analysis and the mass loss analysis was based on the following assumptions:

a. The pond contains total inventory upon onset of LOCA less 0.5 ft for sedimentation of the pond basin;

b. Water losses result only from drift, leakage, evaporation of the sprayed droplets and evaporation due to heat rejection on the pond surface;

c. All the heat transfer is accomplished by evaporation, none of the heat transfer is accomplished by sensible heat transfer;

d. The first 3 days of the thermal performance analysis assume the worst single day of record conditions (Table 9.2-3). It was found that repeating the worst day conditions for 3 days resulted in the maximum peak. The 4 through 30 days are the average meteorological conditions of the worst 30-day period of record (Table 9.2-3). For conservatism, the root mean square (RMS) average wind speed during each period is used rather than the diurnal variation;

e. The 1 through 30 days of the mass loss analysis are the average meteorological conditions of the worst 30-day period of record (see Section 2.3.1.2 and Table 9.2-3). The analysis assumes a mass loss due to drift of 1.02% of the spray flow. This value is an upper bound obtained from results of tests

performed on the spray ponds. Its conservatism was confirmed by testing reported in Reference 2 and shown in Figure 9.2-8;

f. For the design basis mass loss case evaluation, the spray flow is continuous for one spray ring for the first 3 days, with one SW pump in operation. The sprays are cycled on and off for the 4 through 30 days depending on pond temperature. The sprays are turned on when the SW temperature in the suction pond reaches 85°F and are turned off when the temperature drops below 80°F. This method of operation resulted in one cycle on and off per day;

g. Minor leakage was observed in testing of the spray ponds, so test results were used to establish a leakage rate of 3.94 gpm total for both ponds (170,000 gal per 30 days);

h. While not a design basis case, mass loss was also evaluated assuming two spray rings in continuous operation for 2 days, followed by one spray ring in cyclic mode described in item f;

i. The design basis fuel pool cooling heat load is included;

j. For design basis analysis, offsite power is lost and Division 2 diesel fails to start, resulting in a loss of the pond A spray header. (Division 1 heat loads are slightly higher); and

k. The major heat loads considered are reactor core decay heat, sensible heat from both the coolant and the reactor, fuel pool decay heat, pump work, and the heat removed from the station auxiliaries. These heat loads are listed in Table 9.2-4 (using the calculated heat load values) and Table 9.2-5. The fuel pool decay heat generation rate, listed in Table 9.2-4 as variable, is found in Table 9.2-5. No credit was taken for heat sinks in the primary containment other than the suppression pool volume.

The RMS average wind speed during the selected 30-day period for the mass loss analysis was 6.91 mph. The drift loss was based on the calculated drift value at the RMS wind speed. The mass loss analysis thus demonstrates that the spray ponds contain sufficient water inventory to meet drift losses significantly higher than expected. Figure 9.2-8 shows the conservatism demonstrated in confirmatory drift loss testing.

The analyses assume an initial temperature of 77°F. This is approximately the highest monthly average temperature expected if the sprays are not operated. To maintain the pond temperature below this limit, the spray headers will be operated and/or river water makeup to the cooling towers will be diverted through the spray ponds. Analyses were performed which demonstrate that the above operations can maintain the spray pond below 77°F.

An analysis was conducted which verified failure of Division 1 or Division 2 power results in the most severe service water transient. If the failure was postulated in Division 3 (HPCS) instead of Division 1 or 2, the peak pond temperature is lower. The HPCS SW flow is a straight heat dump; therefore, inasmuch as the spray pond is concerned, it raises rather than lowers the temperature transient.

The resulting peak spray pond temperature, 89.6°F, predicted by the "worst case" analysis is below the 90°F service water temperature assumed in the analysis performed in Section 6.2.1 for containment heat removal, adding further conservatism to the containment temperature and pressure transients therein presented. The service water temperature, however, exceeds the design basis temperature, 85°F, for short periods of time as shown in Figure 9.2-9.
A temperature of 90°F has been evaluated for those rooms served by emergency heating, ventilating, and air conditioning (HVAC) equipment, and room temperatures remain within the design limit.

A sensitivity study was performed to determine the effect of the RHR heat exchanger effectiveness on the spray pond temperature transient. The RHR heat exchanger effectiveness varies with the amount of fouling and with the flow rates. The RHR heat exchanger flows different from the rated values in Table 6.2-2 are anticipated only if the operator delays or fails to close the RHR heat exchanger shell side bypass valve as discussed in Section 6.2.2.3. Anticipated variations in fouling were determined to have essentially no affect on the spray pond temperature transient following a design basis LOCA. However, the combination of low SW to RHR cooling flow, low overall SW flow, design RHR HX fouling and no containment spray does adversely affect peak pond temperature. For this reason the temperature case uses low flow/design fouling while the mass loss case uses high flow/clean heat exchangers.

The results of the design basis mass loss analysis assuming an unfouled heat exchanger is shown in Figure 9.2-10 and is tabulated in Table 9.2-6.

Drift losses following loss of makeup to the ponds may be controlled during two spray ring operations by bypassing the spray header on one pond whenever spray pond temperatures drop below approximately 80°F. Continuous, simultaneous operation of both spray rings is not required after a LOCA. Since the two SW loops are redundant to each other, operators will be able to secure any redundant safe shutdown equipment when they determine that the peak temperatures have been passed.

Table 9.2-7 lists the available sources of makeup water to provide continued cooling beyond the initial 30-day period. This table assumes that offsite power is restored within the 30 days. No credit is taken for the water stored in the cooling tower basins. However, it is expected that this water will not be instantaneously lost and may flow to the pond for the same period of time. Table 9.2-7 also summarizes the effects of natural phenomena and of a LOCA on the water supplies to the spray pond.

The possibility of a tornado passing over the spray pond and removing a significant amount of water is considered a credible event. For this reason, the makeup water pump house is designed to be tornado proof, with all piping and electrical power supply between the plant and the pump house underground with adequate soil cover to provide protection from tornado-generated missiles. Since it is not credible to assume an earthquake coincident with a tornado, this system need not be Seismic Category I. Two 12,500-gpm tower makeup water pumps are provided, one powered from each emergency diesel generator. Should pond water be lost due to a tornado, one of these pumps will be started to provide makeup. If the spray headers are damaged by a tornado-generated missile, cooling is provided by a feed-and-bleed mode of operation. In the feed-and-bleed mode, cooling water is supplied to the spray ponds from the makeup water pump house. The service water system takes suction from the spray ponds to provide cooling to safe shutdown equipment. The cooling water is then routed to tornado-protected underground circulating water piping and discharged to the circulating water basin.

The design basis of the UHS includes a 6-in. sedimentation allowance for water inventory considerations. This allowance includes all forms of accumulation, such as dust, silt, or volcanic ash. The design basis ashfall is 3 in. which bounds the Mount St. Helens eruption of May 18, 1980. When sedimentation levels reach 3 inches, an administrative requirement to clean the spray ponds has been incorporated into plant procedures. This ensures adequate water supply even in the event of a design basis ashfall.

With regard to SW pump operation following a design basis ashfall, experience has shown that there may be some increased seal leakage as a result of ashfall. An evaluation was performed which concludes that the pumps would remain operable during a volcanic ashfall condition. Bearing life could be shortened, and bearings would be examined for wear when possible following a significant ashfall.

While the plant is shut down it may be necessary to drain one spray pond for maintenance using the cross connecting spool piece and siphon plug to provide a flow path back to the same pond from which the water was pumped. For this infrequently used mode, there is less than a 30-day supply of water available in one pond without makeup. However, with the reactor vessel depressurized, flooded up to 22 ft or greater above the reactor flange, the fuel pool gates removed, and the reactor at a relatively low temperature (less than about 140°F) prior to removal of a pond from service, the risk to public safety is very small. Alternative makeup water sources for the UHS can be made readily available. Experience has shown that temporary pipe lines can be run from the river in about 3 days. Even in the unlikely event of a loss of the siphon plug, the water inventory would not be lost and the system would remain operable. In that event, water in the inactive pond could be transferred back to the operating pond via portable pumps.

9.2.5.4 Testing and Inspection Requirements

Availability is ensured by periodic functional tests and inspections as required by the Technical Specifications.

9.2.5.5 Instrumentation Requirements

The spray pond is equipped with redundant level and temperature sensors which are alarmed and indicated in the main control room.

In the event that the spray pond level falls below the minimum level required for 30 days of cooling, an alarm is sounded and makeup to the spray ponds is provided using the TMU.

High and low temperature alarms are provided. If the pond water temperature approaches the upper design limit, the spray system is manually initiated to lower the temperature. On a low water temperature signal, return water is dumped directly into the ponds to prevent spray trees and spray headers from icing.

9.2.6 CONDENSATE SUPPLY SYSTEM

9.2.6.1 Design Bases

The condensate supply system (COND) is designed to:

a. Store and provide a condensate supply to the reactor core isolation cooling (RCIC) system, the HPCS system, and the RHR loops;

b. Maintain an adequate level of condensate in the condenser hotwell;

c. Provide a condensate supply for the control rod drive pumps;

d. Provide makeup water to the spent fuel pool;

e. Provide condensate for various radwaste processes;

f. Facilitate testing and/or flushing of the HPCS, low-pressure core spray (LPCS), RHR, and the RCIC;

g. Receive and accommodate a surge volume for condensate returned to the storage tanks after treatment in the liquid radwaste system; and

h. System piping is constructed to ANSI B31.1. Condensate storage tanks are constructed to ASME Section III, Class 3 requirements. System piping inside

the reactor building is Seismic Category II, supported to Seismic Category I requirements. All other piping and system pumps are designed to Seismic Category II requirements. The radwaste building condensate supply pump and the condensate filter demineralizer backwash pump are constructed to ASME Code Section III, Class 3. The reactor building condensate supply pump is designed to the Standards of the Hydraulic Institute.

9.2.6.2 System Description

The demineralized water system and the liquid radwaste system are the primary sources of makeup water to the condensate storage tanks.

The COND is shown in Figure 9.2-11. The system consists of two storage tanks (COND-TK-1A, COND-TK-1B) each with a nominal capacity of 400,000 gal and equipped with electric heaters, a reactor building condensate supply pump (COND-P-3), a radwaste building condensate supply pump (COND-P-4), a condensate filter demineralizer backwash pump (COND-P-5), and necessary piping and instrumentation. The tanks are manufactured with a design pressure of atmospheric plus full static head and maximum design temperature of 140°F. Minimum operating temperature of the tanks is 40°F. The tanks are designed to withstand a wind load of 20 psf on the vertical projected area of the tank and a snow load of 20 psf.

The radwaste building condensate supply pump and the condensate filter demineralizer backwash pump each are designed to supply 1535 gpm at 185 ft total head. The radwaste condensate supply pump has a secondary operating point of 500 gpm at 220 ft total head. The reactor building condensate supply pump is designed to supply 200 gpm at 220 ft total head.

A minimum inventory of 135,000 gal in the condensate storage tanks is reserved for the RCIC and HPCS pumps. This ensures the immediate availability of a sufficient quantity of condensate for emergency core cooling, and reactor shutdown, as discussed in Section 9.2.6.3 and Station Blackout as discussed in Appendix 8A.

Makeup for the condenser hotwell is gravity fed from the storage tank. Bleedoff water from the condensate system is returned to the storage tanks from the discharge of the condensate demineralizer.

A separate line is provided to supply the control rod drive pumps with condensate. Condensate is supplied for various reactor building services, including fuel pool makeup by the reactor building condensate supply pump. The condensate storage tank can be drained to the condenser hotwell. Inadvertent overflow of the tanks is collected in the concrete retaining basin surrounding the tanks. This water can be drained to the radwaste system for processing if sampling indicates that the water is radioactively contaminated. Rain water collected in the retaining basin can be drained to the radwaste system for processing.

9.2.6.3 Safety Evaluation

The condensate storage facilities are not required to ensure any of the following:

a. The integrity of the RCPB,

b. The ability to shut down the reactor and maintain it in a safe shutdown condition, or

c. The ability to prevent or mitigate the consequences of accidents which could result in potential offsite exposures in excess of the guideline exposure of 10 CFR Part 100.

Although a minimum of 135,000 gal is maintained in the condensate storage tanks as a source of water for the RCIC and HPCS pumps, the supply of water in the suppression pool is the emergency source of water for these pumps. The reserve of water is maintained by monitoring the level in the condensate storage tank and by preventing condensate transfer when this reserve level is reached. The RCIC and HPCS pumps are gravity fed from the condensate storage tanks.

The condensate storage tanks are Seismic Category II; however, they are located inside a Seismic Category I concrete dike which is designed to retain the condensate from both tanks. Drainage from the dike is routed to the radwaste system for processing. During precipitation, drainage from the dike is sampled and analyzed for radioactivity before being discharged to a Turbine Building sump and processed in the radwaste system.

The evaluation of radiological considerations for the COND is presented in Section 2.4.13.3. Since the dike is designed to contain any condensate from a postulated tank rupture in conjunction with the heaviest recorded precipitation, the resulting offsite dose rate from this occurrence would be no greater than the value presented in Section 2.4.13.3.

For corrosion protection, the tanks are made of carbon steel with a 1/16-in. corrosion allowance and lined with a modified phenolic coating. Quality control for the application of the coating was in accordance with ANSI N101.4. The interior surfaces of the tanks were blasted to white metal in accordance with SSPC-SP-5 prior to the application of a minimum of 10 mils dry film thickness of Plasite 7155. Coating repairs are made with a compatible amine cured epoxy coating.

9.2.6.4 Testing and Inspection Requirements

The components were inspected and cleaned prior to installation into the system. The condensate storage tanks side wall, side wall to bottom, and nozzle joints were examined in

accordance with ASME Section III, Subsection NC-5000. The tank thickness was tested by magnetic means in accordance with ASTM E376. Underground portions of the HPCS and RCIC piping welds were 100% radiographed to ensure the integrity of the piping.

Periodic functional tests and inspections as required by the Technical Specifications ensure system availability for nonroutine functions. Routine monitoring during normal operation verifies satisfactory system operation to support plant requirements for normal operation.

9.2.6.5 Instrumentation Requirements

Condensate storage tank level is monitored in the main control room. High- and low-level alarms are provided to prevent overflow and to prevent the water level from dropping below the required reserve level for reactor pressure vessel (RPV) makeup. Level switches provide low-low annunciation and interlock with the HPCS and RCIC systems. Building condensate supply pumps are provided with manual controls for maintaining condensate supply pressure in the system headers so that condensate is available for system process services, based on demand.

The following parameters apply to the condensate storage tanks.

Reserve capacity for RPV makeup is provided between the setpoints of the low-level switch and the low-low-level switch. The elevation differential provides a reserve capacity of approximately 67,500 gal per tank.

Thermostatically controlled tank heaters are provided to maintain water temperature in the tanks at or above a nominal 40°F at all times. All above-ground piping that contains water is heat traced to prevent freezing.

System logic diagrams are given in Chapter 7.

9.2.7 STANDBY SERVICE WATER SYSTEM

9.2.7.1 Design Bases

a. The SW system is designed to remove heat from plant systems that are required for a safe reactor shutdown following a LOCA;

b. The system is designed to remove reactor decay heat from the residual heat removal system during normal plant shutdown;

c. The system is designed to perform its required cooling water function following a LOCA, assuming a single active failure;

d. The system is designed to provide a means of flooding the vessel and containment, if required during the post-LOCA period;

e. The system is designed to provide a long-term cooling and makeup source to the fuel pool cooling system following a loss of the RCC system which is the normal source of cooling to fuel pool cooling and cleanup (FPC); and

f. The system is constructed to Seismic Category I and ASME Code Section III, Class 3, requirements with the exception of that portion to and from the plant cooling towers, which is constructed to ANSI B31.1 and Seismic Category II requirements; the spray bypass line discharge orifice and mating flange, which are also constructed to ANSI B31.1 and supported Seismic Category I, the keep full subsystem located in the pump house which is constructed to ANSI B31.1 and supported Seismic Category I, and the spray pond crossover piping which is constructed to ANSI B31.1 and supported Seismic Category I.

9.2.7.2 System Description

The SW system includes vertical service water pumps located adjacent to the two spray ponds in two separate pump houses designed to Seismic Category I criteria. The pumps discharge to three independent piping systems which serve emergency core cooling system (ECCS) equipment, auxiliary plant equipment, and reactor shutdown cooling equipment (see Figures 9.2-7, 9.2-12 through 9.2-14).

The SW pumps consist of two independent 100% capacity pumps each supplying normal and emergency shutdown cooling equipment as shown in Table 9.2-4. A third 100% capacity HPCS service water pump (housed in pump house A) supplies the HPCS system cooling equipment as shown in Table 9.2-4.

Each of the three SW pumps receives its power from independent electrical buses. Each bus is powered from the offsite power supply or its own diesel generator.

During the normal and emergency shutdown modes of operation, water is circulated from the spray ponds to the equipment requiring cooling, and returned to the ponds. The two SW systems return via the spray rings prior to recycle. The HPCS service water returns directly to pond A with no sprays. Spray pond operation and a description of its ability to dissipate waste heat from the plant during normal, shutdown, and accident conditions are provided in Section 9.2.5.

The system is designed such that on receipt of an ECCS start signal, all three pumps are started automatically.

The two spray ponds are sized to have a combined equivalent storage for at least 30 days of operation, assuming no makeup and maximum evaporation and drift losses (see Section 9.2.5).

The SW system is chemically treated to control biological growth and to minimize corrosion.

A small keep-full subsystem is attached to the SW system piping. The keep-full subsystem was originally designed to provide back pressure on the pump discharge valve so that maintenance repairs on the valve could be minimized (i.e., the keep-full subsystem was never intended to keep the system piping completely full). The pump discharge valve design and the system start sequence were changed so that back pressure on the pump discharge valve during the start sequence was no longer necessary. The SW system is able to start from a partially drained condition without damage to system components. The keep-full subsystem has been deactivated and spared in place because it no longer provides a useful function.

The spray ponds are provided with makeup water by the TMU system or the potable water system. The makeup water system supplies Columbia River water to the cooling towers or spray pond to replace water lost during normal operation due to evaporation and drift. The potable water system replaces normal spray pond evaporation and drift losses. In addition, the makeup system is designed to replace spray pond water lost during a tornado. To ensure system availability for this mode of operation, the makeup system is designed to withstand a design basis tornado coincident with a loss of offsite power (see Section 9.2.5.2).

The SW system piping is carbon steel designed to 309 psig (some 150 psig), 150°F, and with a corrosion allowance of 0.080 in. Where SW piping degradation due to erosion/corrosion or other degradation mechanisms occurs, stainless steel material may be substituted to prevent future recurrence.

Standby makeup water to the fuel pool system can be supplied through normally closed Seismic Category I, Quality Class 1, isolation valves by remote manual operation from the control room for SW-V-75A and SW-V-75B and by manual operation for SW-V-75AA and SW-V-75BB (see Section 9.1.3.2.3).

EQUIPMENT DESIGN PARAMETERS

Standby Service Water Pumps (SW-P-1A, SW-P-1B)

Quantity	2
Driver	Motor - ac
Design Capacity	10,300 gpm
Head	500 ft

HPCS Service Water Pump (HPCS-P-2)	
Quantity	1
Driver	Motor - ac
Design Capacity	1200 gpm
Head	123 ft

9.2.7.3 Safety Evaluation

The SW system provides cooling for plant equipment that is essential to a safe reactor shutdown following a design basis LOCA.

System failure mode and effects analyses of passive and active components of the SW system is presented in Table 9.2-8. Any of the assumed failures of the SW system is detected in the main control room by indications and/or alarmed from the various system instruments.

The SW is routed through the tube side of the RHR heat exchanger, through the shell side of the FPC heat exchangers, and through the shell side of the RHR pump seal coolers. The RHR heat exchanger, the FPC heat exchanger, and the RHR pump seal coolers are the only potential sources of radioactive leakage into the standby water system.

A restricting orifice and bypass valve is installed on return lines of loops A and B to maintain sufficient back pressure to ensure flow to all components and to maintain the pressure in the system at a level such that tube leakage in the RHR heat exchanger or pump seal cooler is from the service water system into the RHR system after the reactor is depressurized following shutdown or after a LOCA. Liquid effluent radiation monitors are provided in each of the two RHR heat exchangers outlet lines of the service water system to detect radioactivity resulting from a tube leak in one of the RHR heat exchangers. This condition can occur only for a short time when the RHR system is operated in the shutdown cooling mode in which the service water system pressure may be lower than the RHR system pressure. On detection of radioactive leakage in one of the subsystems, that subsystem is isolated by operator action in the main control room and the cooling requirements are met by the redundant train.* Per the CGS emergency procedures the operators are directed to utilize the alternate shutdown cooling mode when a degraded core condition has been identified. The alternate shutdown cooling mode does not have the potential for radiation leakage into the SW system due to the lower RHR pressure. Consequently, radioactivity released to the spray ponds and/or cooling tower basins is minimized.

Under emergency conditions, i.e., loss of RCC system, the SW system can be routed through the shell side of the FPC heat exchangers to provide long-term cooling. The SW system

* Note that the Safety Evaluation Report for CGS (NUREG – 0892) states in 5.2.5 that automatic isolation is provided. The response for CGS has always been by operator action.

pressure is higher than the FPC system pressure, so that any leakage will be into the FPC system.

An intertie with the RHR system is provided from the SW system supply header B which contains two remote manually operated isolation valves. These valves can be opened from the main control room in the event primary containment flooding is required following a LOCA.

An atmospheric syphon is provided to allow the transfer of water between the two spray ponds. In addition, the SW pumps are provided with double valved, normally closed bypass connections for transferring water from one pond to another.

Temperature/pressure controlled and/or manually operated throttle valves are located on the return side of all SW serviced coolers and heat exchangers. The system is balanced for optimum operation and the throttle valves left in that position. The RHR heat exchanger service water outlet valve, while open during normal standby lineup, is interlocked to open on starting of an SW pump to prevent excess flow conditions in other portions of the system.

Normal SW return is to the spray pond, with normally closed redundant isolation valves on the SW return line to the cooling towers. These valves are mechanically and electrically prevented from opening to preclude returning SW to the cooling towers during normal system operation. This is to ensure that the spray ponds always maintain the capability to meet the system requirements described in Section 9.2.5 and allows control of water chemistry by minimizing dilution.

The non-safety-related SW keep-full subsystem cannot inhibit the ability of the SW system to meet its safety function. Keep-full piping is small and any break in that piping would result in a flow change to SW that is insignificant. The potential flooding of the valve pit area has been evaluated to ensure continued system performance should a break occur in the deactivated keep-full system.

An orifice is installed on the discharge of each spray bypass line where it enters the spray pond. The purpose of the orifice is to mitigate cavitation damage that has occurred in the past due to the higher flow rate of the system in the spray bypass mode of operation. The orifice balances the flow in the bypass mode so it is approximately the same as that in the spray mode. The orifice and its mating flange serve no safety-related function and serve to reduce the potential for long-term effects of cavitation. Failure of the orifice cannot affect the ability of the SW system to fulfill its safety function. The elbow to which the orifice is attached directs the return water into the pond after it passes through SW-V-165A/B, and failure of the orifice would not obstruct or limit flow of return water to the spray pond.

During normal plant operation, the SW pumps are not operating. If a LOCA occurs, the diesel generators and respective SW pumps start automatically. Consequently, no operator action is

required following a LOCA to start the SW system and put the system into its LOCA operating mode.

9.2.7.4 Testing and Inspection Requirements

The SW system is designed to permit periodic inspection of all active system components to ensure the integrity and capability of the system. For inservice inspection see Section 6.6.

The SW system is periodically tested as required by the Technical Specifications to ensure system availability and capability to perform its required design functions.

Requirements for monitoring of heat exchangers cooled by SW are discussed in Generic Letter 89-13. Energy Northwest response to Generic Letter 89-13 outlines compliance with these requirements.

9.2.7.5 Instrumentation Requirements

Each of the SW discharge lines from the RHR heat exchangers contains radiation monitors to detect any radioactivity resulting from a tube leak in the RHR heat exchanger.

Flow indicators and/or switches are provided for most serviced components to indicate low flow. The radiation monitors have transmitters but no indicators due to the use of gravity flow. There are no permanently installed flow instruments for the control room chilled water (CCH) since service water flow through the chiller condensers is controlled by pressure control valves. Temperature indicators, temperature switches, pressure indicators, and/or pressure switches are located in each system to determine pump, individual cooling coil, cooler, or heat exchanger performance.

To avoid excessive system surge pressures, SW pumps SW-P-1A and SW-P-1B are started only if the associated pump discharge valve is closed. HPCS-P-2 can auto start with its discharge valve open, in order to minimize running the HPCS DG without service water cooling (see Section 9.5.5 for discussion of the diesel generator cooling water systems). All three pumps start automatically when the associated diesel generator is started. For each of the three pumps, the pump discharge valve automatically opens when the associated pump is running and the pump discharge pressure is greater than 50 psig. The system instrumentation is shown in Figure 9.2-12.

9.2.8 COMPRESSOR JACKET WATER SYSTEM

9.2.8.1 Design Bases

a. The CJW system is designed to circulate clean water to remove heat from the control air system compressor oil coolers and aftercoolers,

b. The CJW system provides clean water to remove heat from the control air system refrigerated dryer condensers, and

c. Heat is rejected from the CJW system to the plant service water system (TSW).

The CJW system piping and valves are designed in accordance with the ANSI B31.1 Power Piping Code, using design conditions of 125 psig and 200°F, except for the fill and makeup supply piping at the surge pipe, which is designed to 150 psig and 150°F, the same as the demineralized water system. The CJW system is open to the atmosphere at the surge pipe, and the maximum system pressure at the pump discharge is less than design pressure. The heat exchangers are designed and constructed to the ASME Boiler and Pressure Vessel (B&PV) Code Section VIII for design conditions of 150 psig and 200°F.

9.2.8.2 System Description

The CJW system is shown diagrammatically in Figure 9.2-15. Fill and makeup water is supplied from the demineralized water system to the surge pipe through a float operated valve (CJW-LCV-1). An overflow line allows expansion volume to drain to an equipment drain. The surge pipe is connected to the circulating coolant return header at a high point and is open to the atmosphere to vent free air released from the heated water. A positive suction head of approximately 20 ft is provided at the circulating pump suction by the water level in the surge pipe.

Two full-capacity centrifugal pumps (CJW-P-1A and CJW-P-1B) are provided, permitting the system to remain in operation while one pump is isolated for servicing or repair. The operating pump draws water through the return header from the outlets of the compressor(s) and refrigerated dryers(s) in service at that time. This heated water is discharged from the pump toward two full-capacity plate and frame heat exchangers.

The heat exchangers (CJW-HX-1A and CJW-HX-1B) are designed for one to be in operation while the other is isolated. Heat is rejected from the CJW system to the plant service water system. The plant service water is essentially river water which may contain considerable amounts of particulate solids. The CJW to TSW heat exchangers are of the plate and frame type that maintain water velocities high through the passes on both sides, and are readily opened to clean the plate surfaces without disturbing the connecting piping. In the event a heat exchanger becomes fouled, it may be isolated and cleaned while both the CJW and TSW systems remain in operation. The cooled water from the heat exchangers is piped to the compressor and refrigerated dryer supply header. Coolant flow to the compressors and dryers is controlled by temperature control valves in each unit. The dryers will provide a minimal flow path so the CJW pumps do not deadhead because the dryers are designed for continuous operation.

Cooling water at each compressor and refrigerated dryer may be manually isolated when a compressor or dryer is taken out of service for repair, and the coolant may be drained, without disturbing coolant flow at the other compressors and dryers.

9.2.8.3 Safety Evaluation

Operation of the CJW system is not required for the initiation of any engineered safety feature system, or for safe shutdown of the reactor. However, plant availability depends on an adequate supply of compressed control air to operate nonnuclear plant systems, and the CJW system includes redundant components to ensure operability of the system under most conditions.

9.2.8.4 Testing and Inspection Requirements

Routine surveillance inspections while in operation will discover conditions requiring correction before functional failure of the system will occur.

9.2.8.5 Instrumentation Requirements

Sufficient instruments and controls are provided for system operation to support normal facility requirements.

9.2.9 REFERENCES

9.2-1 "1979 Ultimate Heat Sink Spray System Test Results," Washington Public Power Supply System Nuclear Project No. 2 Report (WPPSS-EN-81-01).

9.2-2 "WNP-2 Spray Pond Drift Loss Report," Washington Public Power Supply System, July 1985.

9.2-3 "Plant Service Water (TSW) System," Design Basis Document, Section 350.

9.2-4 "Standby Service Water (SW) System," Design Basis Document, Section 309.

Table 9.2-1

Ultimate Heat Sink Spray Cooling
Pond Design

Parameter	Quantity
Pond configuration	Square (250 ft x 250 ft)
Surface area (two ponds)	125,000 ft^2
Normal water elevation (above msl)	433 ft 6 in.
Maximum operating water elevation (above msl)	433 ft 9 in.
Overflow water elevation (above msl)	434 ft 6 in.
Pond bottom elevation (above msl)	420 ft 0 in.
Pump sump bottom elevation (above msl)	408 ft 3 in.
Freeboard above normal water level	1 ft 0 in.
Sedimentation allowance	6 in.
Normal pond capacity (two ponds at el. 433 ft 6 in.)	12,620,000 gal
Minimum pond capacity (two ponds at el. 432 ft 9 in.)	11,920,000 gal

Table 9.2-2

Spray System Design

Parameter	Quantity
Number of systems	2
Number of trees per system	32
Diameter of the ring headers	140 ft 0 in.
Circumferential spacing between trees	13 ft 9 in.
Number of horizontal arms per riser	7
Pressure at top nozzle	17.3[a] psig
Pressure at interface (flange)	24.5[a] psig
Flow rate per tree at design pressure	321.9[a] gpm
Total flow rate per system	10,300[a] gpm
Nozzle type	Spraying Systems Company 1-1/2-CX-27-55
Height of vertical riser	17 ft 9 in.
Spacing between arms	32 in.
Height of bottom nozzle elevation from system interface (flange) riser pipe diameter	6-11/16 in.
Riser pipe	8 in., Schedule 80
Horizontal branch arm pipe	1.5 in., Schedule 80

[a] Flow rates and pressures are for final design with fuel pool cooling system upgraded (see Section 9.1.3). Prior to completion of fuel pool cooling upgrade, total flow is approximately 9750 gpm.

Table 9.2-3

Diurnal Variation in Meteorological Data[a]
Data based on July 10, 1975

Hour	Dry Bulb (°F)	Dewpoint (°F)	Wet Bulb (°F)	Wind Speed[b] (mph)	Solar Radiation (Btu/hr)
Noon	100.91	59.41	72.98	6.60	276.56
1:00 p.m.	103.09	59.69	73.58	6.60	269.47
2:00	105.20	58.91	73.96	6.60	248.68
3:00	105.71	56.00	72.80	6.60	215.58
4:00	104.93	54.11	71.78	6.60	172.40
5:00	102.48	55.88	71.81	6.60	122.04
6:00	101.15	56.05	71.50	6.60	68.05
7:00	98.27	56.13	70.68	6.60	16.46
8:00	96.21	56.59	70.27	6.60	0.00
9:00	90.72	60.53	70.57	6.60	0.00
10:00	91.33	57.68	69.31	6.60	0.00
11:00	91.49	60.48	70.77	6.60	0.00
Midnight	90.91	58.03	69.35	6.60	0.00
1:00 a.m.	85.92	59.17	68.39	6.60	0.00
2:00	84.24	57.28	66.88	6.60	0.00
3:00	80.61	56.21	65.14	6.60	0.00
4:00	80.24	58.48	66.21	6.60	0.00
5:00	78.27	59.55	66.15	6.60	16.46
6:00	83.25	62.99	69.65	6.60	68.05
7:00	86.77	62.91	70.67	6.60	122.04
8:00	90.64	61.09	70.83	6.60	172.40
9:00	92.64	62.00	71.90	6.60	215.58
10:00	95.23	63.36	73.38	6.60	248.68
11:00	98.32	62.40	73.73	6.60	269.47

Table 9.2-3

Diurnal Variation in Meteorological Data[c] (Continued)
Data based on average values for the period July 9-August 8, 1961

Hour	Dry Bulb (°F)	Dewpoint (°F)	Wet Bulb (°F)	Wind Speed[b] (mph)	Solar Radiation (Btu/hr)
Noon	95.40	45.9	65.5	5.50	276.56
1:00 p.m.	96.80	46.1	66.0	5.50	269.47
2:00	97.30	46.1	66.2	5.50	248.68
3:00	96.80	46.2	66.0	5.50	215.58
4:00	95.40	46.2	65.5	5.50	172.40
5:00	93.10	46.0	64.7	5.50	122.04
6:00	90.10	45.6	63.6	5.50	68.05
7:00	86.60	45.6	62.3	5.50	16.46
8:00	82.80	45.6	61.0	5.50	0.00
9:00	79.00	45.2	59.6	5.50	0.00
10:00	75.60	45.6	58.4	5.50	0.00
11:00	72.50	46.0	57.3	5.50	0.00
Midnight	70.20	46.2	56.5	5.50	0.00
1:00 a.m.	68.80	46.0	56.0	5.50	0.00
2:00	68.30	46.3	55.8	5.50	0.00
3:00	68.80	46.1	56.0	5.50	0.00
4:00	70.20	46.2	56.5	5.50	0.00
5:00	72.50	45.8	57.3	5.50	16.46
6:00	75.60	46.0	58.4	5.50	68.05
7:00	79.00	46.6	59.6	5.50	122.04
8:00	82.80	45.8	61.0	5.50	172.40
9:00	86.60	45.6	62.3	5.50	215.58
10:00	90.10	45.8	63.6	5.50	248.68
11:00	93.10	45.8	64.7	5.50	269.47

Table 9.2-3

Diurnal Variation in Meteorological Data[d] (Continued)
Data based on average values for the period July 2-August 1, 1960

Hour	Dry Bulb (°F)	Dewpoint (°F)	Wet Bulb (°F)	Wind Speed[b] (mph)	Solar Radiation (Btu/hr)
Noon	96.40	42.50	64.70	6.91	276.56
1:00 p.m.	98.00	43.50	65.40	6.91	269.47
2:00	98.50	43.50	65.60	6.91	248.68
3:00	98.00	43.50	65.40	6.91	215.58
4:00	96.40	42.50	64.70	6.91	172.40
5:00	93.90	42.00	63.70	6.91	122.04
6:00	90.70	42.00	62.30	6.91	68.05
7:00	86.90	40.50	60.70	6.91	16.46
8:00	82.90	40.00	59.00	6.91	0.00
9:00	78.90	40.00	57.30	6.91	0.00
10:00	75.10	39.00	55.70	6.91	0.00
11:00	71.90	39.00	54.30	6.91	0.00
Midnight	69.40	39.00	53.30	6.91	0.00
1:00 a.m.	67.80	39.00	52.60	6.91	0.00
2:00	67.30	39.00	52.40	6.91	0.00
3:00	67.80	39.00	52.60	6.91	0.00
4:00	69.40	39.00	53.30	6.91	0.00
5:00	71.90	39.50	54.30	6.91	16.46
6:00	75.10	39.00	55.70	6.91	68.05
7:00	78.90	40.00	57.30	6.91	122.04
8:00	82.90	40.00	59.00	6.91	172.40
9:00	86.90	40.70	60.70	6.91	215.58
10:00	90.70	42.00	62.30	6.91	248.68
11:00	93.90	42.20	63.70	6.91	269.47

Table 9.2-3

Diurnal Variation in Meteorological Data (Continued)

[a] Worst single day of record used to analyze the pond thermal response during first 3 days following LOCA.
[b] Wind speed is the average wind speed for period.
[c] Day 4 through 30 used to analyze pond thermal response following LOCA.
[d] Day 1 through 30 used to analyze mass loss following LOCA.

Table 9.2-4

Flow Rates and Associated Heat Loads Used in the Ultimate Heat Sink Analysis[a]

	Equipment Cooled	Flow (gpm)	Heat Load (Btu/hr)
Division 1			
1.	Standby service water pump house cooler A (PRA-CC-1A)	80	300,000
2.	Diesel generator A	1,650	13,200,000
3.	Diesel generator building A coolers (DMA-CC-11 & 12)	144	Variable
4.	LPCS pump motor bearings	4	0
5.	LPCS pump room cooler (RRA-CC-5)	56	400,000
6.	RHR pump seal cooler A	7	120,000
7.	RHR Room Cooler A (RRA-CC-2)	33	200,000
8.	Motor control center (MCC) dc room cooler (RRA-CC-12)	20	30,000
9.	MCC room cooler (RRA-CC-11)	15	60,000
10.	Control room chiller (CCH-CR-1A)	161	764,750
11.	Cable spreading room cooler (WMA-CC-52A1)	40	135,000
12.	Switchgear room cooler (WMA-CC-53A1)	60	450,000
13.	Hydrogen recombiner MCC room cooler (RRA-CC-13)	11	40,000
14.	Deleted		
15.	RHR heat exchanger A	6,750 to 7,400	Variable
16.	Analyzer room cooler (RRA-CC-15)	10	30,000
17.	Fuel pool pump room cooler (RRA-CC-20)	35	112,000
18.	Fuel pool heat exchanger A	575	Variable
	TOTAL	9,800 to 10,301	

Table 9.2-4

Flow Rates and Associated Heat Loads
Used in the Ultimate Heat Sink Analysis[a] (Continued)

	Equipment Cooled	Flow (gpm)	Heat Load (Btu/hr)
Division 2			
1.	Standby service water pump house cooler B (PRA-CC-1B)	80	300,000
2.	Diesel generator B	1,650	13,200,000
3.	Diesel generator building B coolers (DMA-CC-21&22)	144	Variable
4.	RHR pump cooler B	7	120,000
5.	RHR pump cooler C	0	0
6.	RHR room cooler B (RRA-CC-3)	33	170,000
7.	RHR room cooler C (RRA-CC-1)	33	190,000
8.	RCIC pump room cooler (RRA-CC-6)	12	97,000
9.	MCC room cooler (RRA-CC-10)	15	55,000
10.	Control room chiller (CCH-CR-1B)	161	764,750
11.	Cable spreading room cooler (WMA-CC-52B1)	40	130,000
12.	Switchgear room cooler (WMA-CC-53B1)	60	400,000
13.	Deleted		
14.	Hydrogen recombiner MCC room cooler B (RRA-CC-14)	11	35,000
15.	RHR B heat exchanger B	6,550 to 7,400	Variable
16.	Analyzer room cooler (RRA-CC-17)	10	40,000
17.	Fuel pool pump room cooler (RRA-CC-19)	35	100,000
18.	Fuel pool heat exchanger B	575	Variable
	TOTAL	9,700 to 10,266	

Table 9.2-4

Flow Rates and Associated Heat Loads
Used in the Ultimate Heat Sink Analysis[a] (Continued)

	Equipment Cooled	Heat Load (Btu/hr)
Division 3		
1.	HPCS diesel generator	7,890,000
2.	HPCS diesel building coolers (DMA-CC-31 & 32)	Variable
3.	HPCS pump room cooler (RRA-CC-4)	600,000
	TOTAL	

[a] Information in this table is data input into the thermal analysis of the UHS calculation. The thermal analysis is constructed to provide the peak pond temperature for a LOCA. As such, the data in this table was chosen to conservatively bound the conditions in the field and, therefore, does not necessarily represent exact plant conditions.

Table 9.2-5

Heat Load Rates Used in Ultimate Heat Sink Analysis

I. Core decay heat load[a]

Calculated using BTP ASB 9-2 data.

II. Reactor coolant sensible heat load[a]

The energy (414 x 10^6 Btu referenced to 32°F) of the reactor coolant is accounted for by starting the suppression pool at 150°F).

		Time (hr)	Rate (10^6 Btu/hr)
III.	Reactor vessel, piping, and core sensible heat load[a]	$t \leq 24$ $t > 24$	8.14 Negligible
IV.	Metal-water reaction heat load[a]	$t \leq 1$ $t > 1$	0.47 Negligible
V.	ECCS pump work load[a,b,c]	$t \leq 8$ $t > 8$	13.35857 5.534
VI.	HPCS (division 3) service water system heat load[c,d]	$t \leq 8$ $t > 8$	8.623 0
VII.	Constant division 1 service water system heat load[e,f]	$t \geq 0$	20.04
VIII.	Fuel pool heat load	$t \geq 0$	8.2[g]

[a] Rejected initially to the suppression pool and subsequently transferred by the RHR heat exchangers to the UHS.

[b] RHR pump 2.16277 x 10^6 Btu/hr
LPCS pump 3.5623 x 10^6 Btu/hr
HPCS pump 7.6335 x 10^6 Btu/hr

[c] HPCS system and HPCS SW system shut down after 8 hr.
LPCS system and RHR loop A maintain long-term cooling.

Table 9.2-5

Heat Load Rates Used in
Ultimate Heat Sink Analysis (Continued)

[d]	HPCS service water pump work	0.132314×10^6 Btu/hr
	HPCS coolers (Table 9.2-4)	8.49×10^6 Btu/hr
	Does not include HPCS diesel building coolers.	
[e]	Division 1 service water pump work	4.198315×10^6 Btu/hr
	Division 1 diesel generator, Coolers and misc. equipment (Table 9.2-4)	15.84175×10^6 Btu/hr

[f] Excludes fuel pool, RHR heat exchanger, and diesel generator building "A" coolers.

[g] This heat load is treated as a constant.

Table 9.2-6

Spray Pond Water Losses and Content
(30 days after design basis LOCA event)

Analysis	Quantity (gal)
Drift losses[a]	3.0606 x 10^6
Spray evaporation[b]	5.5690 x 10^6
Surface evaporation	0.6471 x 10^6
Deleted	
Leakage	0.1728 x 10^6
TOTAL	9.4495 x 10^6
Remaining inventory	2.4705 x 10^6
Minimum volume required for system operation	2.26 x 10^6

[a] Based on conservative RHR heat exchanger flow rate of 7400 gpm and fuel pool cooling at 575 gpm.

[b] Based on inclusion of design basis fuel pool cooling heat load.

Table 9.2-7

Source of Spray Pond Makeup Water

Water Source	Design Basis Earthquake	Probable Maximum Flood	River Blockage or Drought	Tornado	LOCA
Plant makeup water pumps	N/A[a]	N/A[a]	N/A[a]	A[b]	A[b]
Cooling tower basin by gravity	N/A[a]	A[b]	A[b]	A[b]	A[b]
Tank truck or rail	A[b]	A[b]	A[b]	A[b]	A[b]

[a] Not available

[b] Available

Table 9.2-8

Standby Service Water System
Failure Analysis

Single Active Failure	Analysis
Loss of power on one emergency bus due to failure of a diesel generator to start or loss of offsite power.	The service water pump powered by the redundant emergency bus will be automatically started to provide the necessary cooling water.
Failure of pump to automatically start.	Same analysis as above.
Failure of an isolation valve in the service water piping to the cooling tower.	Redundant valve is operated to perform the isolation function.
Failure of ECCS pump room air cooling.	Essential plant cooling requirements met by the redundant ECCS subsystems which have their own independently cooled pump rooms.
Failure of a single service water pump during operation.	Essential plant cooling requirements met by the remaining operable redundant ECCS subsystems.
Failure of system return isolation valve.	Essential plant cooling requirements met by the remaining intact ECCS subsystem which includes its own independent return service water headers.
Failure of a pump discharge or RHR outlet isolation valve to open.	Essential plant cooling requirements met by the remaining operable redundant emergency core cooling subsystems.

Table 9.2-8

Standby Service Water System
Failure Analysis (Continued)

Single Active Failure	Analysis
Failure of any supply or return piping.	Essential plant cooling requirements met by the remaining intact ECCS subsystem which includes its own independent supply and return service water headers. Passive failures, i.e., pipe whip, missiles, jet loads are discussed in Sections 3.5 and 3.6.1. The SW system is a moderate-energy fluid system since it is operated at less than 275 psig and 200°F.
Failure of RHR heat exchanger.	Essential plant cooling requirements met by the remaining intact redundant RHR subsystem which includes its own 100% capacity heat exchanger.
Fire	All credible fires and their consequences were evaluated in Appendix F. Because of physical separation, redundancy, and low inventories of combustibles, there are no credible fires which could impede the SW from performing its function.
Failures of equipment by missile.	The HVAC equipment in the SW pump house is arranged in such a manner that would preclude any postulated missile from preventing the plant to be brought to a safe shutdown. External missiles are discussed in Section 3.5.

Table 9.2-9

Integrated Heat Data - Ultimate Heat Sink Reanalysis
Peak UHS Temperature Case

Time After LOCA (minutes)	Q Decay[a]	Q Sens[b]	Q Aux 1[c]	Q Aux 2[d]	Q Aux 3[e]	Q Total[f]	Q SW[g,h]
				10^7 Btu			
1	1.141	0.014	0.022	0.046	0.015	1.237	0.158
2	2.05	0.027	0.045	0.091	0.031	2.244	0.318
4	3.605	0.054	0.089	0.182	0.062	3.992	0.643
10	7.367	0.136	0.223	0.455	0.155	8.336	1.646
20	12.538	0.271	0.445	0.911	0.31	14.475	3.395
40	20.805	0.543	0.891	1.822	0.621	24.681	7.105
90	36.91	1.221	2.004	4.102	1.399	45.636	17.222
120(2H)	45.085	1.628	2.672	5.472	1.868	56.725	23.688
240(4H)	73.582	3.256	5.343	10.944	3.744	96.869	51.341
360(6H)	98.348	4.884	8.015	16.383	5.593	133.223	80.616
480(8H)	120.603	6.512	10.687	21.784	7.408	166.994	110.534
720(12H)	160.016	9.768	12.977	32.510	7.408	222.679	169.691
960(16H)	195.082	13.024	15.267	43.162	7.408	273.943	226.206
1200(20H)	227.462	16.280	17.557	53.841	7.408	322.548	279.9

Table 9.2-9

Integrated Heat Data - Ultimate Heat Sink Reanalysis (Continued)
Peak UHS Temperature Case (Continued)

Time After LOCA (minutes)	Q Decay[a]	Q Sens[b]	Q Aux 1[c]	Q Aux 2[d]	Q Aux 3[e]	Q Total[f]	Q SW[g,h]
	10^7 Btu						
1440(1D)	258.019	19.54	19.847	64.674	7.408	369.484	330.914
2160(1.5D)	342.44	19.54	26.717	97.210	7.408	493.311	467.328
2880(2D)	419.033	19.54	33.587	129.805	7.408	609.37	590.415
4320(3D)	555.03	19.54	47.327	196.061	7.408	825.362	814.75
5760(4D)	674.009	19.54	61.067	262.615	7.408	1024.635	1022.03
7200(5D)	780.8	19.54	74.808	329.883	7.408	1212.435	1215.591
8640(6D)	878.638	19.54	88.548	395.957	7.408	1390.086	1394.847
11520(8D)	1055.541	19.54	116.028	529.081	7.408	1727.594	1736.691
14400(10D)	1215.309	19.54	143.508	662.242	7.408	2048.003	2060.058
17280(12D)	1363.194	19.54	170.989	795.325	7.408	2356.451	2370.193
23040(16D)	1633.357	19.54	225.949	1061.026	7.408	2947.277	2963.377
28800(20D)	1877.638	19.54	280.910	1326.568	7.408	3512.06	3529.486
34560(24D)	2101.496	19.54	335.871	1592.057	7.408	4056.368	4074.732
43200(30D)	2406.351	19.54	418.312	1991.513	7.408	4843.12	4865.409

Table 9.2-9

Integrated Heat Data - Ultimate Heat Sink Reanalysis (Continued)
Mass Loss Case

Time After LOCA (minutes)	Q Decay[a]	Q Sens[b]	Q Aux 1[c]	Q Aux 2[d]	Q Aux 3[e]	Q Total[f]	Q SW[g,h]
				10^7 Btu			
1	1.141	0.014	0.022	0.045	0.015	1.237	0.242
2	2.05	0.027	0.045	0.090	0.03	2.242	0.486
4	3.605	0.054	0.089	0.181	0.061	3.990	0.983
10	7.367	0.136	0.223	0.453	0.152	8.33	2.514
20	12.538	0.271	0.445	0.905	0.305	14.465	5.176
40	20.805	0.543	0.891	1.811	0.61	24.659	10.767
90	36.91	1.221	2.004	4.075	1.375	45.585	25.613
120(2H)	45.085	1.628	2.672	5.433	1.833	56.651	34.807
240(4H)	73.582	3.256	5.343	10.851	3.658	96.691	71.991
360(6H)	98.348	4.884	8.015	16.228	5.449	132.924	108.443
480(8H)	120.603	6.512	10.687	21.551	7.188	166.541	143.434
720(12H)	160.016	9.768	12.977	32.078	7.188	222.027	207.743
960(16H)	195.082	13.02	15.267	42.592	7.188	273.153	265.500
1200(20H)	227.462	16.28	17.557	53.311	7.188	321.798	318.844

Table 9.2-9

Integrated Heat Data - Ultimate Heat Sink Reanalysis (Continued)
Mass Loss Case (Continued)

Time After LOCA (minutes)	Q Decay[a]	Q Sens[b]	Q Aux 1[c]	Q Aux 2[d]	Q Aux 3[e]	Q Total[f]	Q SW[g,h]
	10^7 Btu						
1440(1D)	258.019	19.54	19.847	64.271	7.188	368.861	368.821
2160(1.5D)	342.44	19.54	26.717	97.054	7.188	492.935	500.546
2880(2D)	419.033	19.54	33.587	130.138	7.188	609.482	622.072
4320(3D)	555.03	19.54	47.327	197.189	7.188	826.27	844.583
5760(4D)	674.009	19.54	61.067	262.919	7.188	1024.719	1041.614
7200(5D)	780.8	19.54	74.808	329.660	7.188	1211.991	1232.498
8640(6D)	878.638	19.54	88.548	395.876	7.188	1389.786	1412.51
11520(8D)	1055.541	19.54	116.028	528.950	7.188	1727.243	1751.881
14400(10D)	1215.309	19.54	143.508	661.898	7.188	2047.439	2073.224
17280(12D)	1363.194	19.54	170.989	794.831	7.188	2355.737	2382.182
23040(16D)	1633.357	19.54	225.949	1060.595	7.188	2946.626	2973.486
28800(20D)	1877.638	19.54	280.910	1326.316	7.188	3511.588	3538.686
34560(24D)	2101.496	19.54	335.871	1592.712	7.188	4056.803	4086.781
43200(30D)	2406.351	19.54	418.312	1992.282	7.188	4843.669	4874.731

Table 9.2-9

Integrated Heat Data - Ultimate Heat Sink Reanalysis (Continued)

[a] Q Decay	Integrated core decay heat suppression pool.
[b] Q Sensible	Integrated sensible heat rejected by the reactor vessel, piping, and core to the suppression pool.
[c] Q Auxiliary I	Integrated heat from ECCS pump work rejected to the suppression pool.
[d] Q Auxiliary 2	Integrated heat from auxiliary systems rejected to division 1 SW system. This heat includes all sources of heat into division 1 SW system except for the RHR heat exchanger. The RHR heat exchanger transfers heat from the suppression pool to division 1 SW system.
[e] Q Auxiliary 3	Integrated heat from HPCS SW system. This heat is a straight heat dump into spray pond A.
[f] Q Total	Sum of Q Decay, Q Sensible, Q Auxiliary 1, Q Auxiliary 2, and Q Auxiliary 3.
[g] Q Service	Sum of Q Auxiliary 2 and the heat rejected by the RHR heat exchanger into division 1 SW system, i.e, the sum of the heat rejected through the spray nozzles.

[h] The RHR heat exchangers provide suppression pool cooling from 10 minutes through to the end of an accident (30 days). No heat exchanger cooling is assumed for the first 10 minutes of an accident. See Sections 6.2.2.2 and 6.3.2.8 for further information on containment cooling.

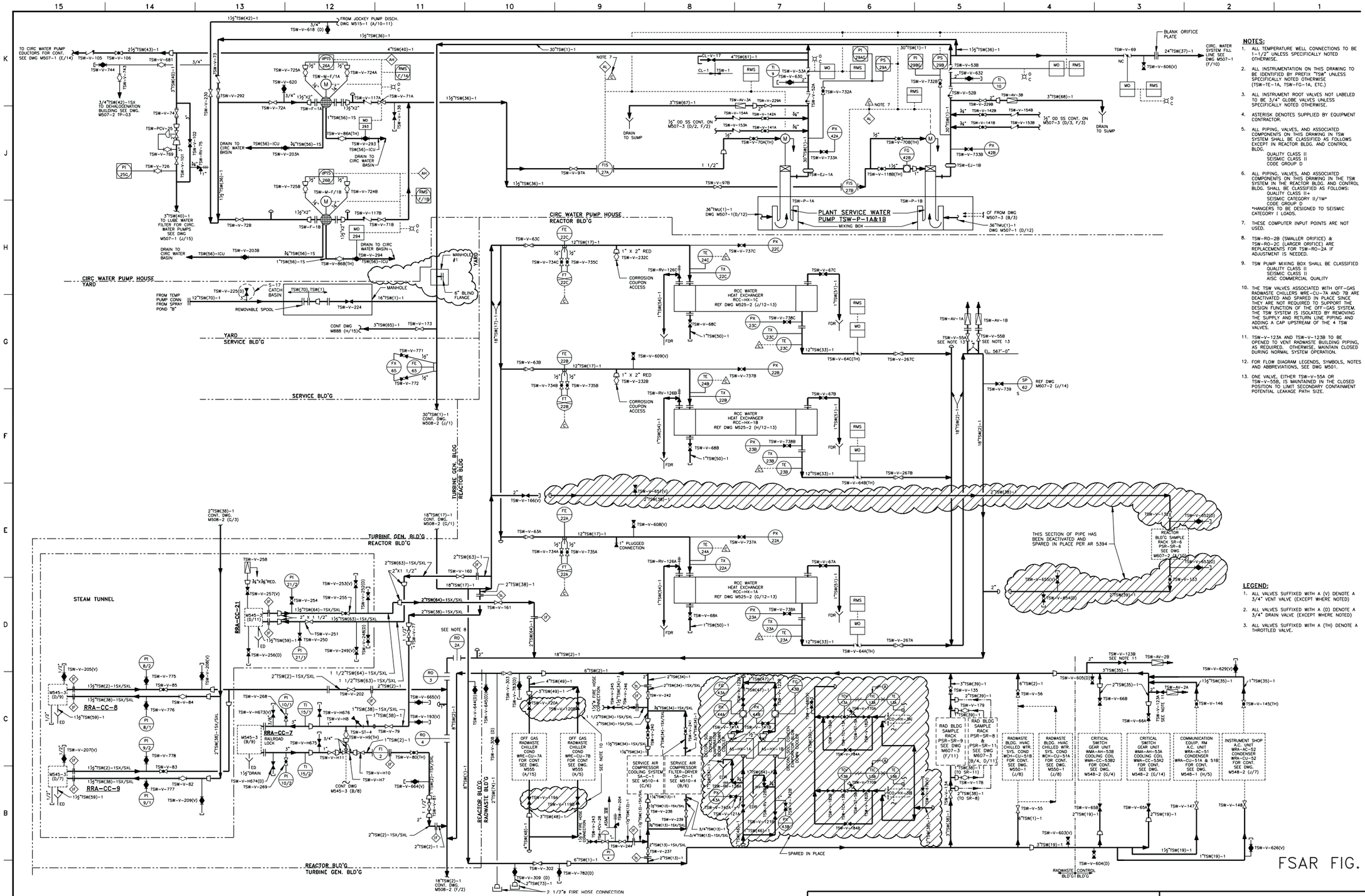
CIRC WATER PUMP HOUSE YARD
YARD SERVICE BLD'G
SERVICE BLD'G
TURBINE GEN. BLD'G REACTOR BLD'G
CIRC WATER PUMP HOUSE REACTOR BLD'G
REACTOR BLD'G RADWASTE BLD'G
STEAM TUNNEL
PLANT SERVICE WATER PUMP TSW-P-1A&1B
MIXING BOX
RCC WATER HEAT EXCHANGER RCC-HX-1A
RCC WATER HEAT EXCHANGER RCC-HX-1B
RCC WATER HEAT EXCHANGER RCC-HX-1C
RRA-CC-8
RRA-CC-7
RRA-CC-9
RAILROAD LOCK
CATCH BASIN
MANHOLE #1
6" BLIND FLANGE
REMOVABLE SPOOL
OFF GAS RADWASTE CHILLER COND WRE-CU-7A FOR CONT SEE DWG. M555 (A/15)
OFF GAS RADWASTE CHILLER COND WRE-CU-7B FOR CONT SEE DWG. M555 (A/5)
SERVICE AIR COMPRESSOR COOLING SYSTEM SA-CU-1 SEE M510-4 (G/6)
SERVICE AIR COMPRESSOR FILTER-DRYER SA-DY-1 SEE M510-4 (B/6)
RAD BLDG SAMPLE RACK PSR-SR-9 SEE DWG M607-3 (F/11)
RAD BLDG SAMPLE RACK PSR-SR-8 SEE DWG M607-3 (B/4, D/11)
RADWASTE BLDG. HVAC CHILLED WTR. SYS. COND WCH-CU-51B FOR CONT. SEE DWG. M550-1 (J/8)
RADWASTE BLDG. HVAC CHILLED WTR. SYS. COND WCH-CU-51A FOR CONT. SEE DWG. M550-1 (J/8)
CRITICAL SWITCH GEAR UNIT WMA-AH-53B COOLING COIL WMA-CC-53B2 FOR CONT. SEE DWG. M548-2 (G/4)
CRITICAL SWITCH GEAR UNIT WMA-AH-53A COOLING COIL WMA-CC-53A2 FOR CONT. SEE DWG. M548-2 (G/14)
COMMUNICATION EQUIP. RM A.C. UNIT WRA-AC-51 CONDENSER WRA-CU-51A & 51B FOR CONT. SEE DWG. M548-1 (H/5)
INSTRUMENT SHOP A.C. UNIT WRA-AC-52 CONDENSER WRA-CU-52 FOR CONT. SEE DWG. M548-2 (J/7)
RADWASTE CONTROL BLD'G
REACTOR BLD'G SAMPLE RACK SR-6 PSR-SR-6 SEE DWG M607-2 (A/10)
THIS SECTION OF PIPE HAS BEEN DEACTIVATED AND SPARED IN PLACE PER AR 5394
SPARED IN PLACE
TO CIRC WATER PUMP EJECTORS FOR CONT SEE DWG M507-1 (E/14)
TO LUBE WATER FILTER FOR CIRC. WATER PUMPS SEE DWG M507-1 (J/15)
FROM TEMP PUMP CONN FROM SPRAY POND "B"
FROM JOCKEY PUMP DISCH. DWG M515-1 (A/10-11)
CONT DWG M888 (H/15)
30"TSW(1)-1 CONT. DWG. M508-2 (J/1)
18"TSW(17)-1 CONT. DWG. M508-2 (G/1)
18"TSW(2)-1 CONT. DWG. M508-2 (F/2)
2"TSW(38)-1 CONT. DWG. M508-2 (G/3)
CIRC. WATER SYSTEM FILL LINE SEE DWG M507-1 (F/10)
REF DWG M607-2 (J/14)
DRAIN TO SUMP
DRAIN TO CIRC WATER BASIN
DRAIN TO CIRC WATER BASIN-
BLANK ORIFICE PLATE
CF FROM DWG M507-3 (B/3)
36"TMU(1)-1 DWG M507-1 (D/12)
2 1/2"ø FIRE HOSE CONNECTION
1" PLUGGED CONNECTION
CORROSION COUPON ACCESS
SEE NOTE 8
SEE NOTE 10
SEE NOTE 11
SEE NOTE 13
TSW-V-1123B
TSW-V-1124B
TSW-V-1125B
TSW-V-1126B
TSW-V-1127B
TSW-V-1128B
TSW-V-1129B
TSW-V-1130B
TSW-V-1131B
TSW-V-1132B
TSW-V-1133B
TSW-V-1134B
TSW-V-1135B
TSW-V-1136B
TSW-V-1137B
TSW-V-1138B
TSW-V-1139B
TSW-V-1140B
TSW-V-1141B
TSW-V-1142B
TSW-V-1143B
TSW-V-1144B
TSW-V-1145B
TSW-V-1146B
TSW-V-1147B
TSW-V-1148B
TSW-V-1149B
TSW-V-1150B
TSW-V-1151B
TSW-V-1152B
TSW-V-1153B
TSW-V-1154B
TSW-V-1155B
TSW-V-1156B
TSW-V-1157B
TSW-V-1158B
TSW-V-1159B
TSW-V-1160B
TSW-V-1161B
TSW-V-1162B

NOTES:

1. FOR NOTES & LEGEND SEE M508-1.
2. WIRELESS TRANSMISSION TO RFW-RCVR-2W & TSW-TT-1, FROM TT-1, 902 TO 928 MHZ FHSS, 31 mW MAX. RF POWER OUTPUT. ANTENNA GAIN IS 0.44 DBI. BASE RADIO SHALL HAVE AN EXCLUSION DISTANCE OF 1'-0" MIN. TO ELECTRICAL COMPONENTS.

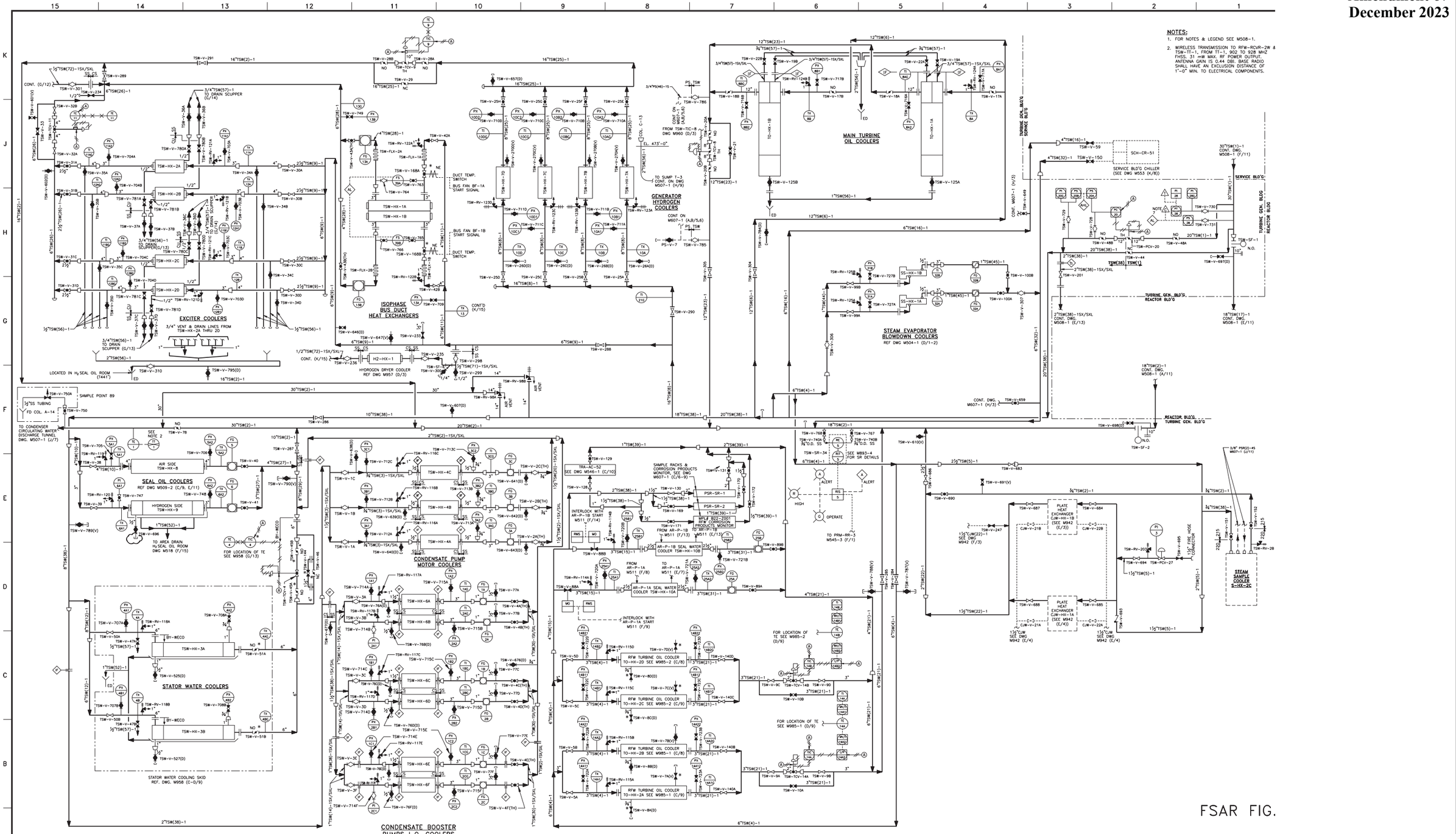
MAIN TURBINE OIL COOLERS
GENERATOR HYDROGEN COOLERS
EXCITER COOLERS
ISOPHASE BUS DUCT HEAT EXCHANGERS
STEAM EVAPORATOR BLOWDOWN COOLERS
REF DWG M504-1 (D/1-2)
SEAL OIL COOLERS
REF DWG M509-2 (C/9, E/11)
CONDENSATE PUMP MOTOR COOLERS
STATOR WATER COOLERS
STATOR WATER COOLING SKID REF. DWG. M958 (C-D/9)
CONDENSATE BOOSTER PUMPS L.O. COOLERS
SERVICE BLD'G CHILLER (SEE DWG M553 (K/8))
STEAM SAMPLE COOLER S-HX-2C
TURBINE GEN. BLD'G
SERVICE BLD'G
REACTOR BLD'G
TSW(38) TSW(1)
HYDROGEN DRYER COOLER REF DWG M957 (D/3)
TO CONDENSER CIRCULATING WATER DISCHARGE TUNNEL DWG. M507-1 (J/7)
TO AREA DRAIN H2 SEAL OIL ROOM DWG M518 (F/15)
SAMPLE POINT 89
LOCATED IN H2 SEAL OIL ROOM (7441')
3/4" VENT & DRAIN LINES FROM TSW-HX-2A THRU 2D
TSW-HX-1A
TSW-HX-1B
TSW-HX-2A
TSW-HX-2B
TSW-HX-2C
TSW-HX-2D
TSW-HX-3A
TSW-HX-3B
TSW-HX-4A
TSW-HX-4B
TSW-HX-4C
TSW-HX-6A
TSW-HX-6B
TSW-HX-6C
TSW-HX-6D
TSW-HX-6E
TSW-HX-6F
TSW-HX-7A
TSW-HX-7B
TSW-HX-7C
TSW-HX-7D
TSW-HX-8
TSW-HX-9
H2-HX-1
1D-HX-1A
1D-HX-1B
CONT. (G/12)
CONT. (K/15)
CONT'D (K/15)
CONT. DWG. M607-1 (H/3)
CONT. DWG. M607-1 (A/8,5/6)
CONT. DWG. M607-1 (A/8,5/6)
FROM TSW-TIC-8 DWG M960 (D/3)
TO SUMP T-3 CONT. ON DWG M507-1 (H/9)
TO PRM-RR-3 M545-3 (F/1)
FROM AR-P-1A M511 (E/7)
TO AR-P-1A M511 (E/7)
FROM AR-P-1B M511 (F/13)
TO AR-P-1B M511 (E/13)
AR-P-1A SEAL WATER COOLER TSW-HX-10A
AR-P-1B SEAL WATER COOLER TSW-HX-10B
INTERLOCK WITH AR-P-1A START M511 (F/9)
INTERLOCK WITH AR-P-1B START M511 (F/14)
TRA-AC-52 SEE DWG M546-1 (C/10)
SAMPLE RACKS & CORROSION PRODUCTS MONITOR, SEE DWG M607-1 (C/6-9)
MPLE B22-2001 RFW CORROSION PRODUCTS MONITOR
RFW TURBINE OIL COOLER TO-HX-2D SEE M985-2 (C/8)
RFW TURBINE OIL COOLER TO-HX-2C SEE M985-2 (C/9)
RFW TURBINE OIL COOLER TO-HX-2B SEE M985-1 (C/8)
RFW TURBINE OIL COOLER TO-HX-2A SEE M985-1 (C/9)
FOR LOCATION OF TE SEE M985-2 (D/9)
FOR LOCATION OF TE SEE M985-1 (D/9)
FOR LOCATION OF TE SEE M958 (C-D/9)
PLATE HEAT EXCHANGER CJW-HX-1B (SEE M942 (E/3))
PLATE HEAT EXCHANGER CJW-HX-1A (SEE M942 (E/4))
CONT. DWG. M508-1 (A/11)
CONT. DWG. M508-1 (E/11)
CONT. DWG. M508-1 (E/13)
CONT. DWG. M508-1 (F/11)
CONT. ON M507-1 (A/8,5/6)
CONT. ON DWG M507-1 (H/3)
SEE NOTE 2
SEE M893-4 FOR SR DETAILS
ALERT
HIGH
OPERATE
ED
NO
NC
TH
N.O.
SS-HX-1A
SS-HX-1B
SCH-CR-51
TSW-PCV-20
TSW-PCV-27
TSW-SF-1
TSW-SF-2
TSW-RV-2B
TSW-RV-12M
TSW-RV-1210
TSW-RV-1230
TSW-RV-1228
TSW-RV-1211
TSW-RV-1212
TSW-RV-1214
TSW-RV-1215
TSW-RV-1216
TSW-RV-1217
TSW-RV-1218
TSW-RV-1219
TSW-RV-1220
TSW-RV-1221
TSW-RV-1222
TSW-RV-1223
TSW-RV-1224
TSW-RV-1225
TSW-RV-1226
TSW-RV-1227
TSW-RV-1228
TSW-RV-1229
TSW-RV-1230
TSW-RV-1231
TSW-RV-1232
TSW-RV-1233
TSW-RV-1234
TSW-RV-1235
TSW-RV-1236
TSW-RV-1237
TSW-RV-1238
TSW-RV-1239
TSW-RV-1240
TSW-RV-1241
TSW-RV-1242
TSW-RV-1243
TSW-RV-1244
TSW-RV-1245
TSW-RV-1246
TSW-RV-1247
TSW-RV-1248
TSW-RV-1249
TSW-RV-1250
TSW-RV-1251
TSW-RV-1252
TSW-RV-1253

FOR INSTRUMENT & VALVE PREFIX LETTERS SEE DETAIL "A"																										
COOLING COIL BANK NUMBER	RCC-TX-						RCC-PX-				RCC-V-															
	A	B	C	D	E	F	A	B	C	D	A**	B**	C	D	E**	F**	G	H	J	K	L	M	N	P	Q	R	S	T
CRA-CC-1A	30A	31A	32A	33A	34A	35A	25A	26A	27A	28A	81A	82A	83A	84A	85A	86A	87A	88A	769A	770A	771A	772A		628(V)	630(V)	631(V)	629(V)	
CRA-CC-1B	30B	31B	32B	33B	34B	35B	25B	26B	27B	28B	81B	82B	83B	84B	85B	86B	87B	88B	769B	770B	771B	772B		624(V)	626(V)	623(V)	627(V)	
CRA-CC-1C	30C	31C	32C	33C	34C	35C	25C	26C	27C	28C	81C	82C	83C	84C	85C	86C	87C	88C	769C	770C	771C	772C		622(V)	621(V)	620(V)	625(V)	
CRA-CC-2A	30D	31D	34D	33D	32D	35D	25D	26D	27D	28D	85D	82D	87D	88D	81D	86D	83D	84D	769D	770D	771D	772D		636(V)		637(V)			
CRA-CC-2B	30E	31E	35E	34E	33E	32E	25E	26E	27E		86E	85E	84E	83E	82E	81E	88E	87E	769E	770E	771E							

**THROTTLED VALVES

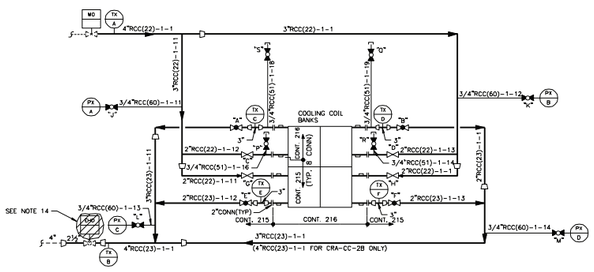

DETAIL "A"

TYPICAL DETAIL FOR COOLING COIL BANKS CRA-CC-1A, 1B, 1C, 2A, 2B.

NOTE:

FOR THE REMAINING UNITS, CHANGE THE INITIAL DIGIT OF THE UNIQUE LINE NUMBER TO CORRESPOND TO THE FOLLOWING: IF UNIT 1A (SHOWN) INDENTIFIES -1,-11-12, ETC. THEN THE UNIT 1B WILL BE: -2,-21-22, ETC; UNIT 1C: -3,-31-32, ETC; UNIT 2A: -4,-41,-42, ETC, AND UNIT 2B: -5,-51,-52, ETC.

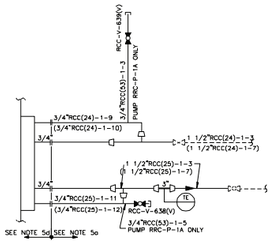

DETAIL "B"

(ZONE F/6,8)

LINE NUMBERS IN PARENTHESES DENOTE PUMP 1B SYSTEM IDENTIFICATION

DETAIL "C"				
INSTRUMENT NO.	LINE NO.			
	INLET FLOW	OUTLET FLOW	DRAWING	ZONE
RCC-FX-22A	1/2"RCC(60)-1-26	1/2"RCC(60)-1-27	M525-1	G/8
RCC-FX-22B	1/2"RCC(60)-1-28	1/2"RCC(60)-1-29	M525-1	G/6
RCC-FX-23A	1/2"RCC(60)-1-6	1/2"RCC(60)-1-7	M525-1	F/8
RCC-FX-23B	1/2"RCC(60)-1-16	1/2"RCC(60)-1-17	M525-1	F/5
RCC-FX-24A	1/2"RCC(60)-1-8	1/2"RCC(60)-1-9	M525-1	F/8
RCC-FX-24B	1/2"RCC(60)-1-18	1/2"RCC(60)-1-19	M525-1	F/5
RCC-FX-25A	1/2"RCC(60)-1-10	1/2"RCC(60)-1-15	M525-1	D/8
RCC-FX-25B	1/2"RCC(60)-1-20	1/2"RCC(60)-1-25	M525-1	D/5
RCC-FX-10A	1/2"RCC(60)-2-1	1/2"RCC(60)-2-2	M525-2	J/6
RCC-FX-10B	1/2"RCC(60)-2-6	1/2"RCC(60)-2-7	M525-2	G/6

DETAIL "C"

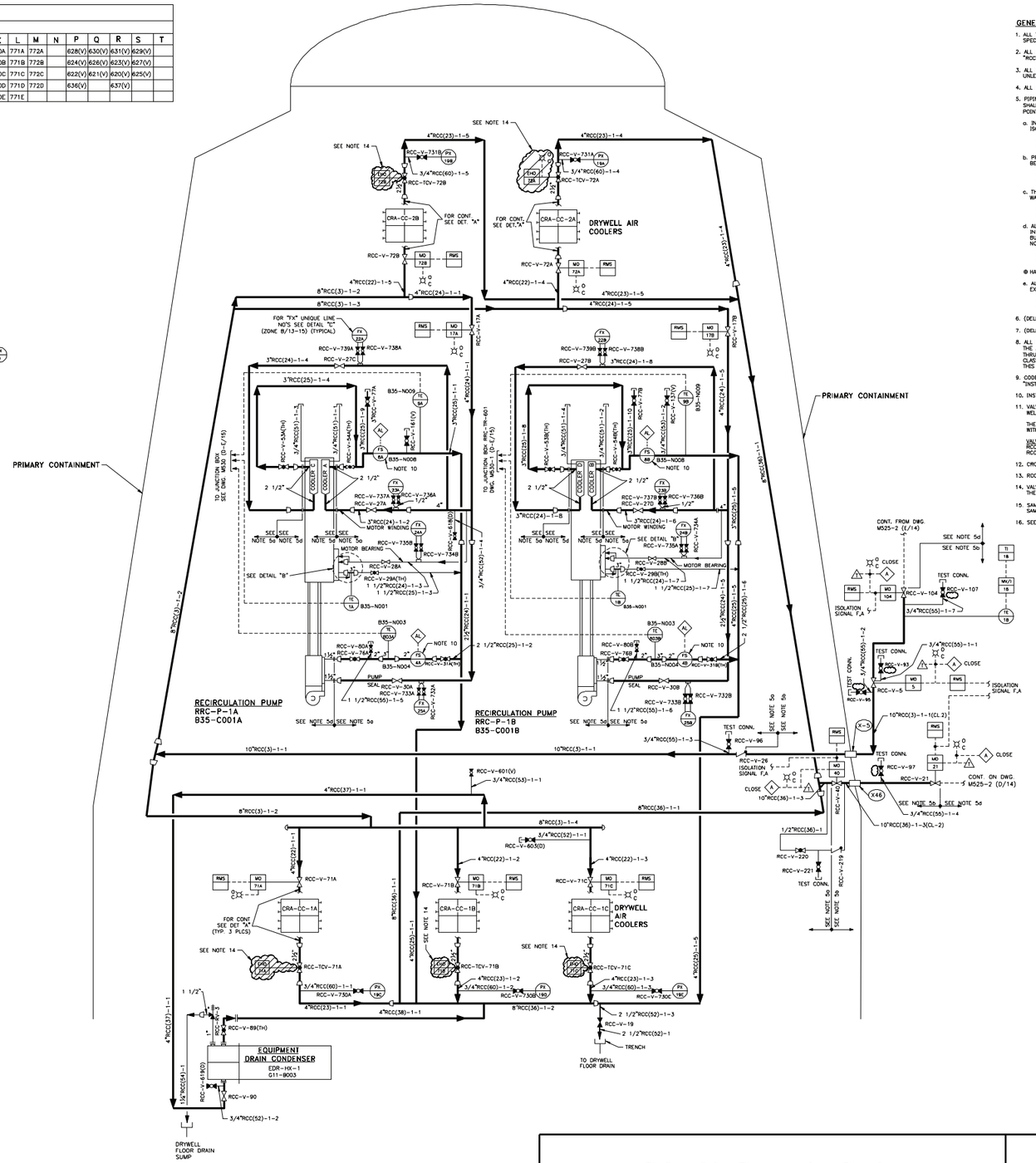

GENERAL NOTES:

1. ALL TEMPERATURE WELL CONNECTION TO BE 1 1/2" NPT UNLESS SPECIFICALLY NOTED OTHERWISE.
2. ALL INSTRUMENTATION ON THIS DRAWING TO BE INDENTIFIED BY PREFIX "RCC" UNLESS SPECIFICALLY NOTED OTHERWISE.
3. ALL INSTRUMENT ROOT VALVES NOT LABELED WILL BE 3/4" GLOBE VALVES UNLESS SPECIFICALLY NOTED OTHERWISE.
4. ALL ITEMS MARKED * ARE FURNISHED WITH ASSOCIATED EQUIPMENT.
5. PIPING, VALVES, AND ASSOCIATED COMPONENTS ON THIS DRAWING SHALL BE CLASSIFIED AS FOLLOWS, EXCEPT AS STATED IN NOTE 8. (BREAK POINTS ARE INDICATED ON THE FLOW DIAGRAM):
   a. INSIDE PRIMARY CONTAINMENT BEYOND THE INNERMOST CONTAINMENT ISOLATION VALVES:
      SEISMIC CATEGORY II @
      QUALITY CLASS II
      CODE GROUP C
   b. PRIMARY CONTAINMENT ISOLATION VALVES AND ALL PIPING AND VALVES BETWEEN THESE ISOLATION VALVES:
      SEISMIC CATEGORY I
      QUALITY CLASS I
      CODE GROUP B
   c. THE RADWASTE BLDG. STARTING FROM THE RADWASTE BUILDING EAST WALL:
      SEISMIC CATEGORY II
      QUALITY CLASS II
      CODE GROUP D
   d. ALL PIPING, VALVES, AND ASSOCIATED COMPONENTS ON THIS DRAWING IN THE RCC SYSTEM, IN THE REACTOR BUILDING, AND THE RADWASTE BUILDING CORRIDOR SHALL BE CLASSIFIED AS FOLLOWS, EXCEPT AS NOTED:
      SEISMIC CATEGORY II @
      QUALITY CLASS II
      CODE GROUP D
   @ HANGERS TO BE DESIGNED TO SEISMIC CATEGORY I LOADS.
   e. ALL PIPING, VALVES, AND ASSOCIATED COMPONENTS ON THIS DRAWING EXCEPT AS NOTED ABOVE:
      SEISMIC CATEGORY I
      QUALITY CLASS I
      CODE GROUP C
6. (DELETED)
7. (DELETED)
8. ALL PIPING DOWNSTREAM OF THE LAST ISOLATION VALVE AND OPEN TO THE ATMOSPHERE WITH THE SUBSYSTEM DESIGNATION "SYSTEM" (50) THRU (59) SHALL BE CLASSIFIED AS CODE GROUP D WITH QUALITY CLASS AND SEISMIC CATEGORY PROVIDED BY THE APPLICABLE NOTES ON THIS DRAWING.
9. CODE BREAK DEFINITIONS FOR THERMOWELLS ARE SHOWN ON M610, "INSTALLATION OF THERMOWELLS AND SAMPLE PROBES."
10. INSTRUMENTATION SO NOTED SHALL BE CODE GROUP E.
11. VALVE IS NOT ASME III CLASS 3, IT IS CONSIDERED SA105 MATERIAL WELDED TO THE SYSTEM.

    THE FOLLOWING WASHINGTON STATE SPECIAL NUMBERS ARE IDENTIFIED WITH THE CORRESPONDING VALVES:

VALVE TAG NUMBER	WASHINGTON STATE SPECIAL NUMBER
RCC-V-133A	WS-22-83W
RCC-V-133B	WS-25-83W

12. CROSS-HATCHED AND SCOPED EQUIPMENT IS NON-OPERATIONAL.
13. RCC-V-36A & RCC-V-36B HAVE BEEN GAGGED CLOSED.
14. VALVE OPERATOR HAS BEEN DEACTIVATED. VALVE IS IN THE OPEN POSITION AND FLUID DRAINED FROM OPERATOR.
15. SAMPLE POINT IS NO LONGER FUNCTIONAL. ALTERNATE METHOD OF SAMPLING IS DONE PER APPLICABLE PPM.
16. SEE DWG M501 FOR FLOW DIAGRAM LEGENDS, SYMBOLS AND ABBREVIATIONS.

LEGEND:

1. ALL VALVES (EXCEPT THOSE ON INSTRUMENT LINES) SUFFIXED WITH A (V) DENOTE A 3/4" VENT VALVE, EXCEPT AS NOTED.
2. ALL VALVES (EXCEPT THOSE ON INSTRUMENT LINES) SUFFIXED WITH A (D) DENOTE A 3/4" DRAIN VALVE.
3. ALL VALVES SUFFIXED WITH A (TH) DENOTE A THROTTLED VALVE.

REFERENCES TO CONTRACT NUMBERS, SUCH AS 215, 206, 220, FOUND IN THE NOTES ON THIS DRAWING REFER TO ORIGINAL CONSTRUCTION DESIGN REQUIREMENTS.

CURRENT DESIGN REQUIREMENTS ARE DOCUMENTED IN THE STATION DESIGN SPECIFICATIONS AND ACTIVE CONTRACT SPECIFICATIONS WHICH STILL APPLY.

Columbia Generating Station
Final Safety Analysis Report

Closed Cooling Water System - Reactor and Radwaste Buildings

Draw. No. M525-1 | Rev. 86 | Figure 9.2-2.1

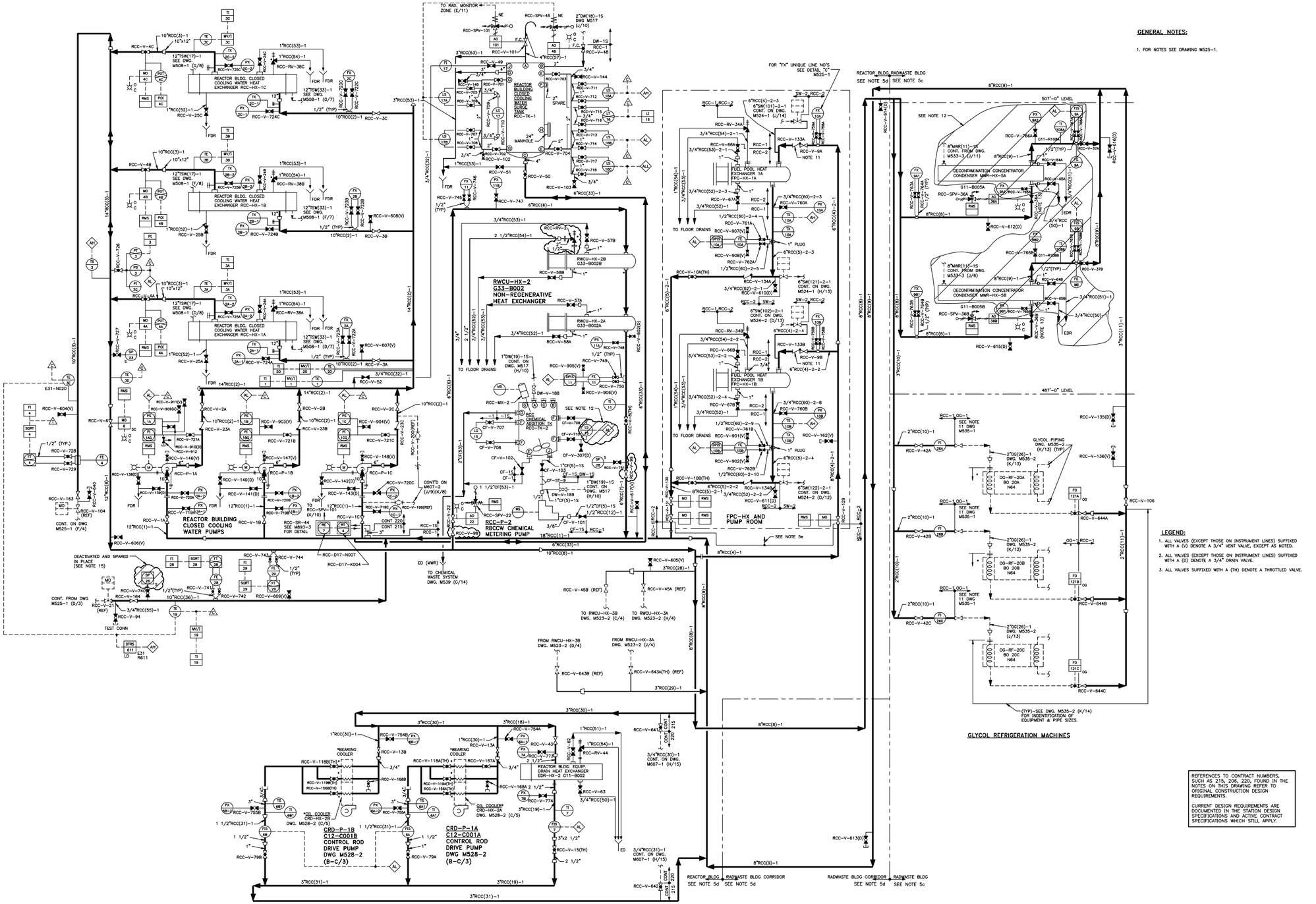

Columbia Generating Station
Final Safety Analysis Report

Closed Cooling Water System - Reactor and Radwaste Buildings

Draw. No. M525-2	Rev. 3	Figure 9.2-2.2

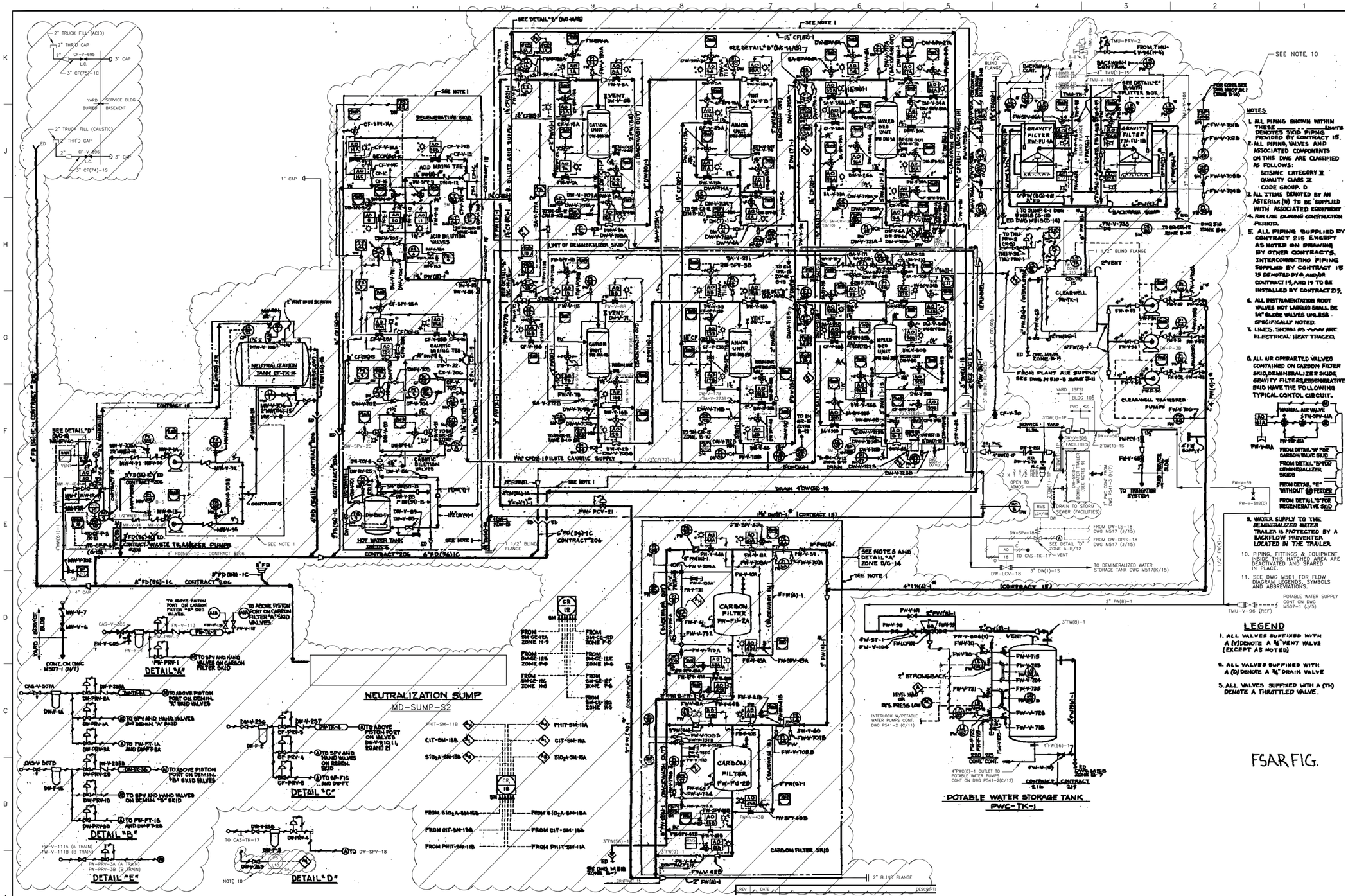

Columbia Generating Station **Final Safety Analysis Report**	**Makeup Water Treatment System**	
	Draw. No. **M516**	Rev. **80**	Figure **09.2-03**

Form No. 960690ai

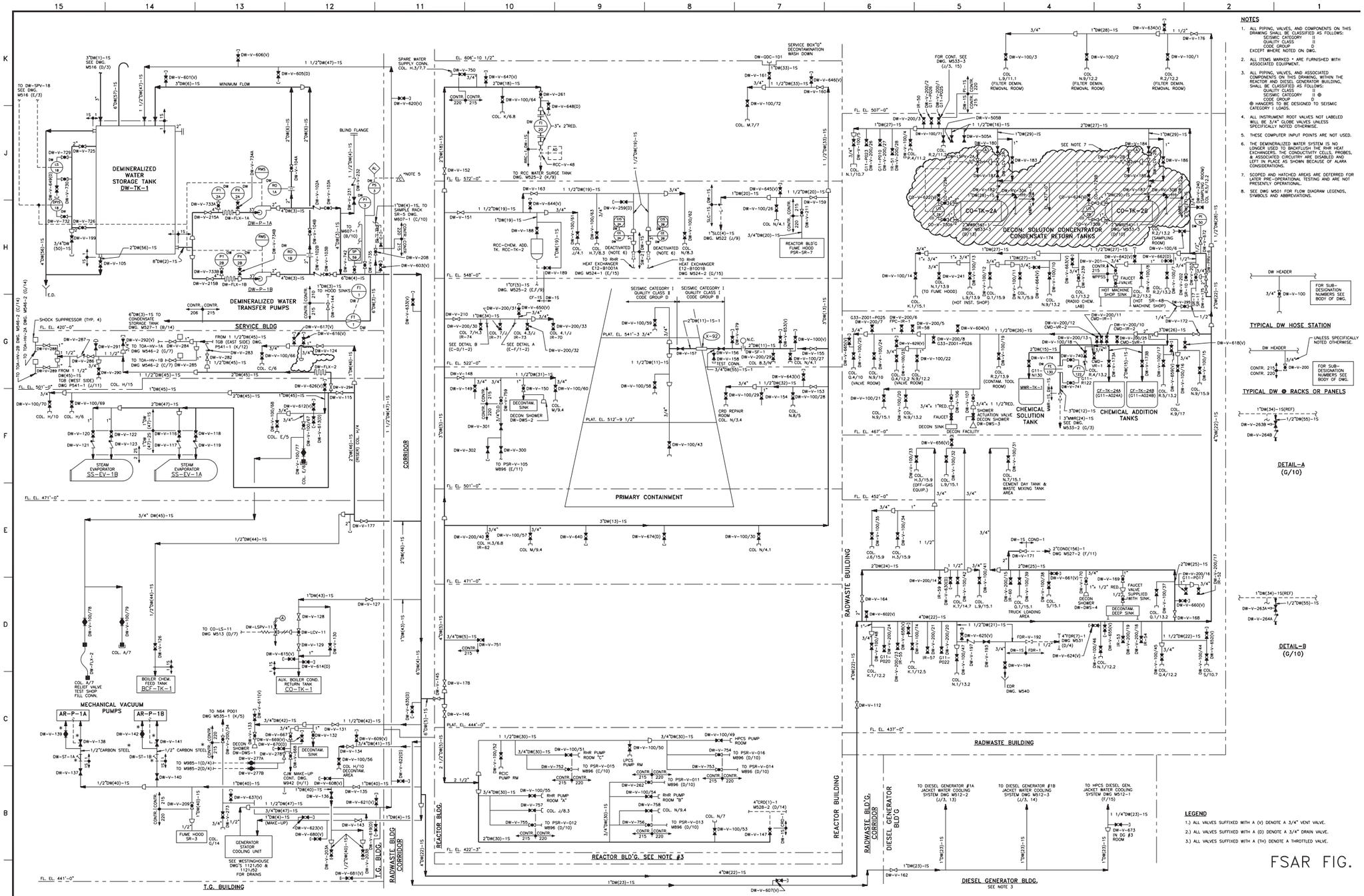
DEMINERALIZED WATER STORAGE TANK DW-TK-1
DEMINERALIZED WATER TRANSFER PUMPS
DW-P-1A
DW-P-1B
SERVICE BLDG
CORRIDOR
PRIMARY CONTAINMENT
REACTOR BLDG.
REACTOR BLDG. SEE NOTE #3
RADWASTE BUILDING
CO-TK-2A
CO-TK-2B
DECON. SOLUTION CONCENTRATOR CONDENSATE RETURN TANKS
CHEMICAL SOLUTION TANK
CHEMICAL ADDITION TANKS
CF-TK-24A (G11-A024A)
CF-TK-24B (G11-A024B)
RCF-TK-1
BOILER CHEM. FEED TANK
CO-TK-1
AUX. BOILER COND. RETURN TANK
AR-P-1A
AR-P-1B
MECHANICAL VACUUM PUMPS
STEAM EVAPORATOR XS-EV-1B
STEAM EVAPORATOR XS-EV-1A
GENERATOR STATOR COOLING UNIT
SEE WESTINGHOUSE DWG'S 1121J50 & 1121J52 FOR DRAINS
T.G. BUILDING
T.G. BLDG. CORRIDOR
RADWASTE BLDG. CORRIDOR
DIESEL GENERATOR BLD'G
DIESEL GENERATOR BLDG. SEE NOTE 3
REACTOR BUILDING
RADWASTE BUILDING
SEISMIC CATEGORY I QUALITY CLASS I CODE GROUP B
SEISMIC CATEGORY I QUALITY CLASS II CODE GROUP B
SERVICE BOX"D" DECONTAMINATION WASH DOWN
SPARE WATER SUPPLY CONNL. COL. H,3/7,7
TO DW-SPV-18 SEE DWG. M516 (E/3)
MINIMUM FLOW
BLIND FLANGE
SHOCK SUPPRESSOR (TYP. 4)
TO CONDENSATE STORAGE TANK DWG. M527-1 (B/14)
TO HOOD SINKS
TO RCC WATER SURGE TANK DWG. M525-2 (K/9)
TO RHR HEAT EXCHANGER E12-B1001A DWG M524-1 (E/15)
TO RHR HEAT EXCHANGER E12-B1001B DWG M524-2 (G/15)
REACTOR BLDG. FUME HOOD PSR-SR-7
DECONTAM. SINK
DECON SHOWER DW-DWS-2
DECONTAM. SINK
DECON SHOWER DW-DWS-1
CRD REPAIR ROOM COL. N/3,4
RHR PUMP ROOM "A"
RHR PUMP ROOM "B"
RCIC PUMP RM
LPCS PUMP RM
HPCS PUMP ROOM
TO PSR-V-015 M896 (C/10)
TO PSR-V-016 M896 (D/10)
TO PSR-V-014 M896 (D/10)
TO PSR-V-011 M896 (D/10)
TO PSR-V-012 M896 (D/10)
TO PSR-V-013 M896 (D/10)
TO PSR-105 M896 (E/11)
DECON FACILITY
SHOWER ACTUATION VALVE DECON SHOWER DW-DWS-3
DECONTAM. DEEP SINK
FAUCET VALVE SUPPLIED WITH SINK.
HOT MACHINE SHOP SINK
FAUCET (VALVE)
(HOT INST. SHOP)
(RADIO CHEM. LAB)
(MACHINE SHOP)
(SAMPLING ROOM)
(FILTER DEMIN. REMOVAL ROOM)
(FILTER DEMIN. REMOVAL ROOM)
(FILTER DEMIN. REMOVAL ROOM)
(CONTAM. ROOM)
(VALVE ROOM)
(CEMENT DAY TANK & WASTE MIXING TANK AREA)
(TRUCK LOADING AREA)
EDR DWG. M540
TO DIESEL GENERATOR #1A JACKET WATER COOLING SYSTEM DWG M512-2 (J/3, 13)
TO DIESEL GENERATOR #1B JACKET WATER COOLING SYSTEM DWG M512-3 (J/3, 14)
TO HPCS DIESEL GEN. JACKET WATER COOLING SYSTEM DWG M512-1 (F/15)
FOR CONT. SEE DWG. M533-3 (J/3, 15)
SEE NOTE 7
SEE DWG. M533-3 (D/10)
SEE DWG. M533-3 (G/10)
SEE DWG. M533-3 (J/10)
SEE DWG. M533-3 (K/10)
SEE DWG. M533-3 (G/3)
SEE DWG. M533-3 (J/3)
TO CO-LS-11 DWG M513 (D/7)
TO N64 P001 DWG M535-1 (K/5)
TO M985-1(D/4)+ TO M985-2(D/4)
TO TGB (EAST SIDE) DWG. P541-1 (K/12)
TO TGB (WEST SIDE) DWG P541-1 (J/11)
TO TOA-HV-1A DW-V-284
TO TOA-HV-1B DW-V-285
TO TOA-HV-2A DWG M546-2 (C/7)
TO TOA-HV-2B DWG M546-2 (C/7)
FROM 1 1/2"DW(45)-15 DWG M546-2 (C/7)
FROM 1 1/2"DW(45)-15 DWG M546-2 (C/7)
TO CONDENSATE STORAGE TANK DWG. M527-1 (B/14)
TO M64 P001 DWG M535-1 (K/5)
TO M985-1(D/4)+ TO M985-2(D/4)
TO N64 P001 DWG M535-1 (K/5)
TO HOOD SINKS
TO RCC WATER SURGE TANK DWG. M525-2 (K/9)
TO RHR HEAT EXCHANGER E12-B1001A DWG M524-1 (E/15)
TO RHR HEAT EXCHANGER E12-B1001B DWG M524-2 (G/15)
REACTOR BLDG. FUME HOOD PSR-SR-7
TO SAMPLE RACK SR-5 DWG. M607-1 (G/10)
TO M607-1 (B/10)
TO CO-LS-11 DWG M513 (D/7)
TO N64 P001 DWG M535-1 (K/5)
TO M985-1(D/4)+ TO M985-2(D/4)
TO TGB (EAST SIDE) DWG. P541-1 (K/12

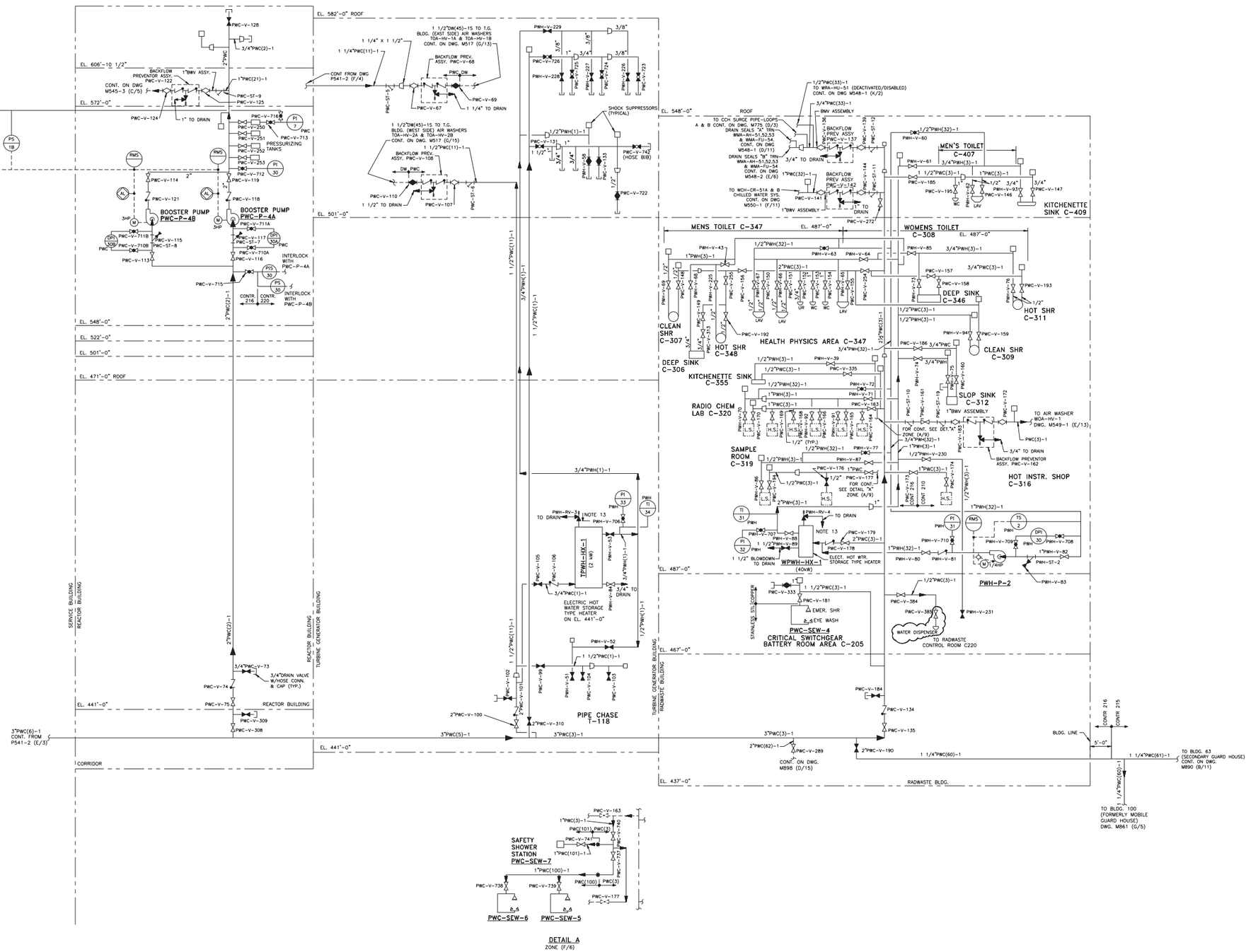

NOTES:

1. USE 1/2" BRANCH SIZE FOR ALL LAVATORIES.
2. USE 3/4" BRANCH SIZE FOR ALL URINALS.
3. USE 1" BRANCH SIZE FOR ALL WATER CLOSETS.
4. USE 3/4" BRANCH SIZE FOR ALL SERVICE SINKS.
5. USE 1/2" BRANCH SIZE FOR ALL SHOWER HEADS.
6. USE 1/2" BRANCH SIZE FOR ALL ELECTRIC WATER COOLERS.
7. USE 1/2" BRANCH SIZE FOR ALL LAB SINKS.
8. SHOCK SUPPRESSORS SHALL BE PROVIDED FOR ALL HOT & COLD WATER SUPPLY BRANCHES AS SHOWN ON DIAGRAM BY SYMBOL.
9. ALL VALVES IN PWC & PWH SYSTEM SHALL BE 1/2" SIZE, UNLESS OTHERWISE NOTED.
10. FOR FLOW DIAGRAM LEGEND, SYMBOLS, AND ABBREVIATIONS SEE DWG. M501.
11. ALL PRESSURE AND FLOW INSTRUMENT ROOT VALVES SHALL BE 3/4" GLOBE VALVES, UNLESS NOTED OTHERWISE.
12. ALL PIPING, VALVES, AND ASSOCIATED EQUIPMENT, ON THIS DWG. SHALL BE CLASSIFIED AS SEISMIC CATEGORY II, QUALITY CLASS "G", EXCEPT AS NOTED BELOW.

    ALL PIPING AND PIPING SUPPORT IN REACTOR BLDG. & CONTROL BLDG. SHALL BE CLASSIFIED AS FOLLOWS (SEE WNP-2 SPECIFICATIONS SECT. 150.2, PLUMBING AND 15Q, HANGERS).

    SEISMIC CATEGORY: 1M

    QUALITY CLASS: A

    PLUMBING FIXTURES HAVE NO SEISMIC REQUIREMENTS.

    CODE GROUP FOR ALL PIPING ON THIS DWG. – D
13. ELECTRICAL CONTROLS FOR ELECTRIC HOT WATER HEATER IN ACCORDANCE WITH SPECS.
14. ALL TAGS FOR INSTRUMENT ROOT VALVES WILL BE FURNISHED & INSTALLED BY OWNER.
15. POTABLE WATER SIZING CALCULATIONS ARE 09.51.03 AND 09.51.06.
16. THESE VALVES ARE REVERSE OPERATING BALL VALVES.
17. TO BURIED, ONE CUBIC YARD GRAVEL FIELD.
18. FOR OTHER PWC DIAGRAM INFORMATION SEE DWG. M573-1.
19. THE FOLLOWING BACKFLOW PREVENTERS ARE LOCATED WITHIN BUILDING:

BLDG.	EPN	BLDG.	EPN
33	PWC-V-378		
33	FP-V-345	27	TMU-V-BFP-1
33	TMU-V-105		

LEGEND:

1. H.S. – HOODED SINK
   L.S. – LAB SINK
   S.S. – SERVICE SINK
   W.C. – WATER CLOSET
   LAV. – LAVATORY
   SH. – SHOWER
   E.W.C. – ELECT. WATER COOLER
   J.C. – JANITORS CLOSET
   UR. – URINAL
   BWV. – BACK WATER VALVE
2. ALL VALVES SUFFIXED WITH A (TH) DENOTE A THROTTLED VALVE.

FSAR FIG.

REFERENCES TO CONTRACT NUMBERS, SUCH AS 215, 206, 220, FOUND IN THE NOTES ON THIS DRAWING REFER TO ORIGINAL CONSTRUCTION DESIGN REQUIREMENTS.

CURRENT DESIGN REQUIREMENTS ARE DOCUMENTED IN THE STATION DESIGN SPECIFICATIONS AND ACTIVE CONTRACT SPECIFICATIONS WHICH STILL APPLY.

Columbia Generating Station
Final Safety Analysis Report

Potable Hot and Cold Water
Reactor, Turbine Generator & Radwaste Bldgs.

Draw. No. P541-1	Rev. 84	Figure 9.2-5.1

NOTES:
1. GENERAL NOTES LOCATED ON P541-1.

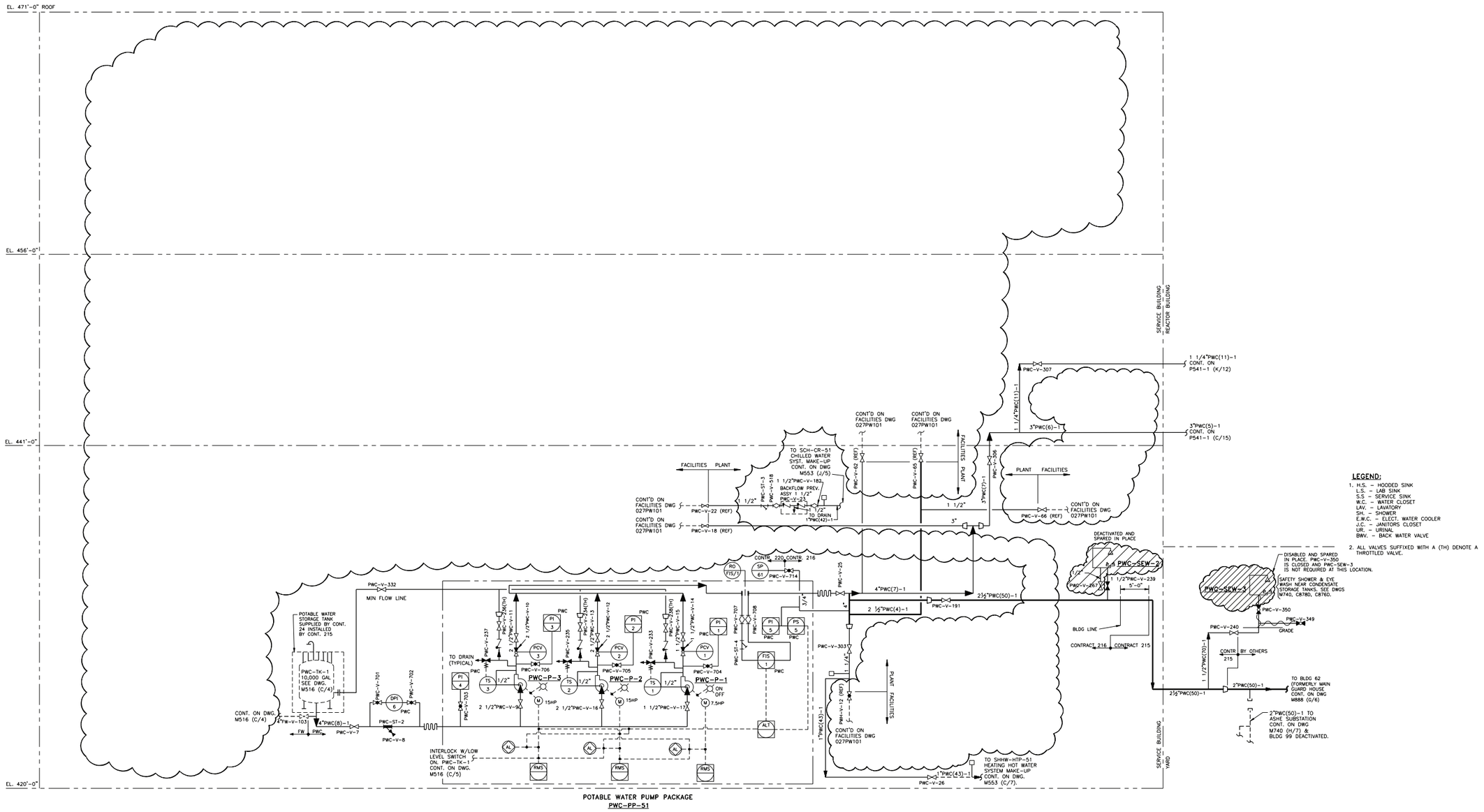

POTABLE WATER PUMP PACKAGE
PWC-PP-51

LEGEND:
1. H.S. – HOODED SINK
L.S. – LAB SINK
S.S. – SERVICE SINK
W.C. – WATER CLOSET
LAV. – LAVATORY
SH. – SHOWER
E.W.C. – ELECT. WATER COOLER
J.C. – JANITORS CLOSET
UR. – URINAL
BWV. – BACK WATER VALVE

2. ALL VALVES SUFFIXED WITH A (TH) DENOTE A THROTTLED VALVE.

Columbia Generating Station
Final Safety Analysis Report

Potable Hot and Cold Water Service Building and Yard

Draw. No. P541-2	Rev. 10	Figure 9.2-5.2

NOTES:

1. GENERAL NOTES LOCATED ON P541-1.
2. FOR FACILITIES PIPING, SEE FACILITIES DRAWING G20MP001.

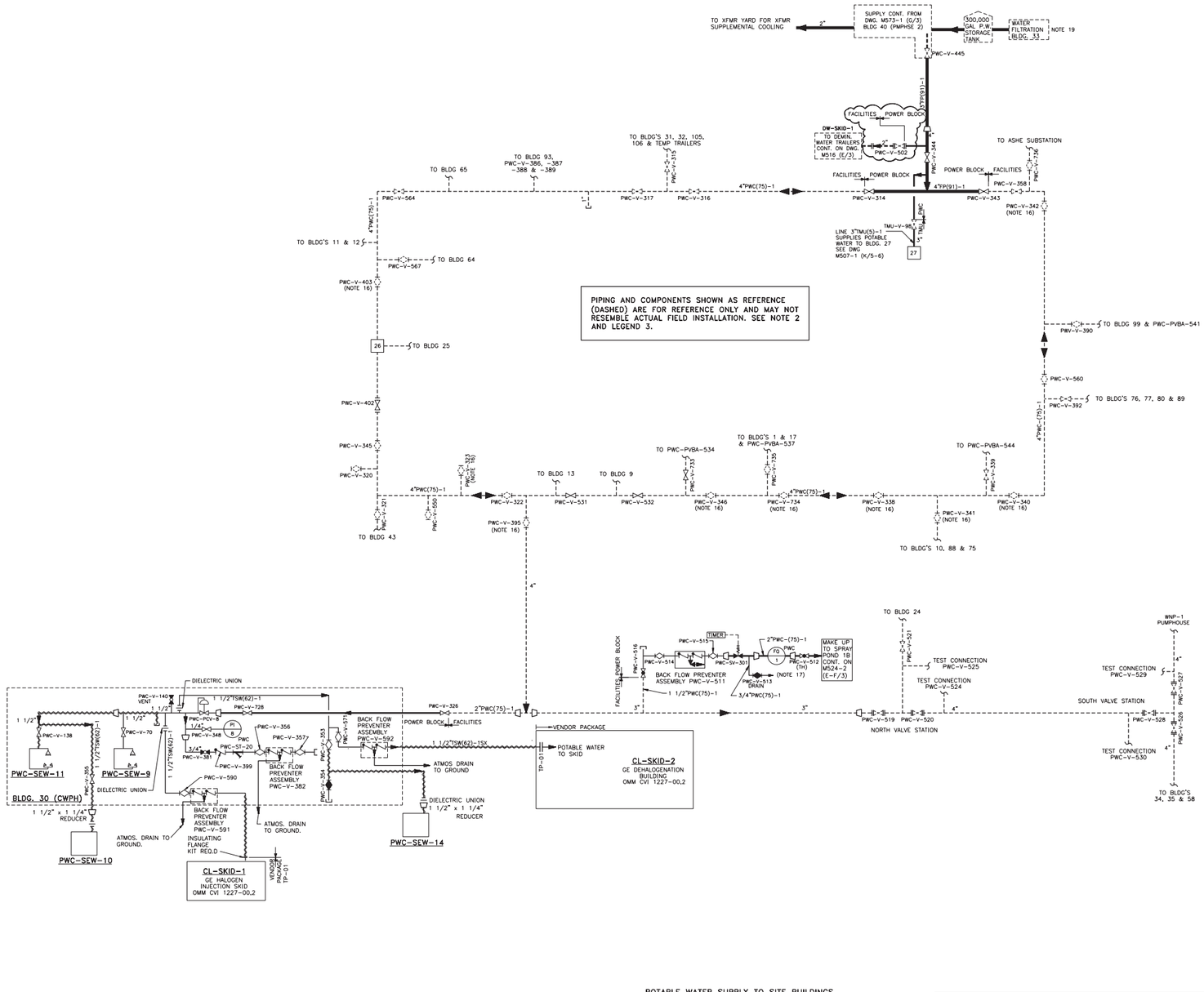

LEGEND:

2. ALL VALVES SUFFIXED WITH A (TH) DENOTE A THROTTLED VALVE.
3. PWC-V-ZZZ PWC-V-YYY — DENOTES PIPING SHOWN ON FACILITIES DRAWING G20MP001

FSAR FIG.

REFERENCES TO CONTRACT NUMBERS, SUCH AS 215, 206, 220, FOUND IN THE NOTES ON THIS DRAWING REFER TO ORIGINAL CONSTRUCTION DESIGN REQUIREMENTS.

CURRENT DESIGN REQUIREMENTS ARE DOCUMENTED IN THE STATION DESIGN SPECIFICATIONS AND ACTIVE CONTRACT SPECIFICATIONS WHICH STILL APPLY.

POTABLE WATER SUPPLY TO SITE BUILDINGS

Columbia Generating Station
Final Safety Analysis Report

Potable Hot and Cold Water Site Buildings

Draw. No. P541-3	Rev. 17	Figure 9.2-5.3

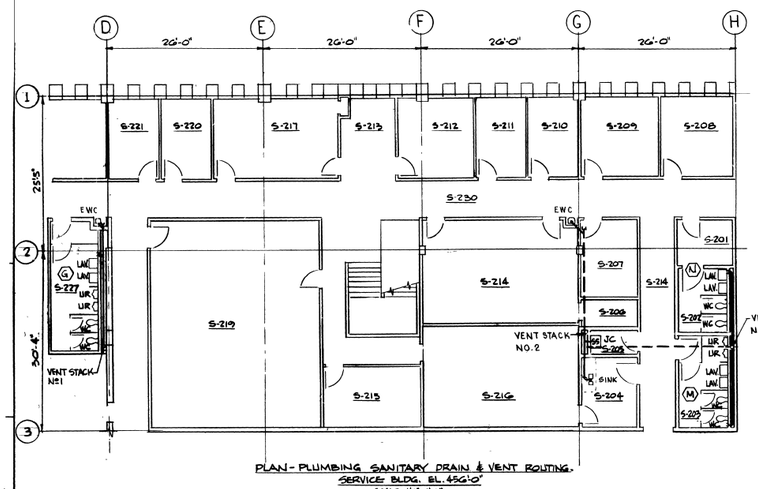

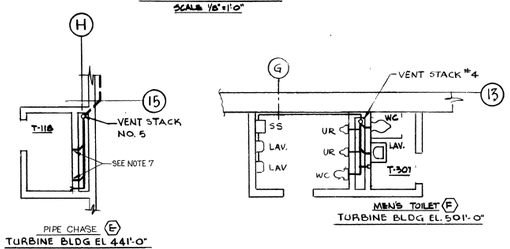

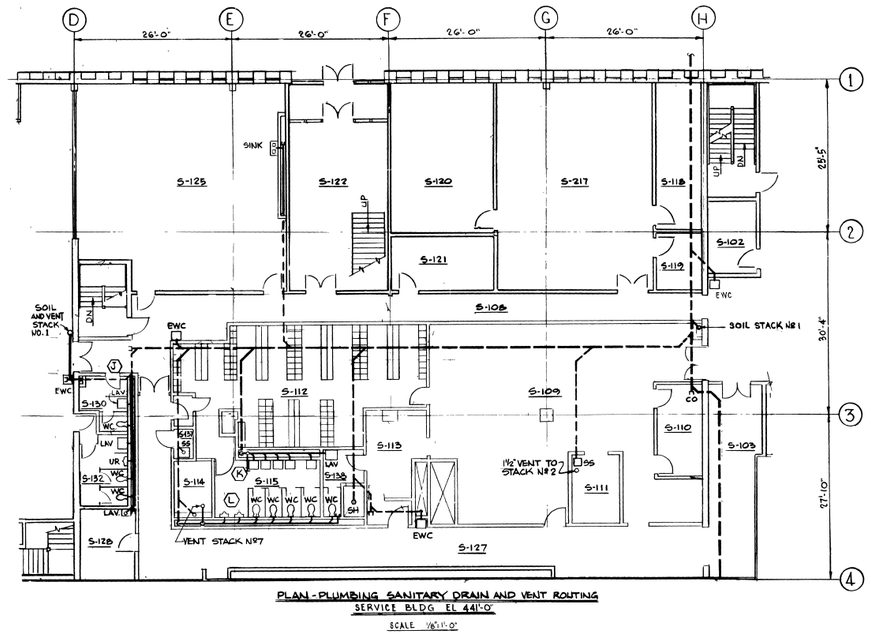

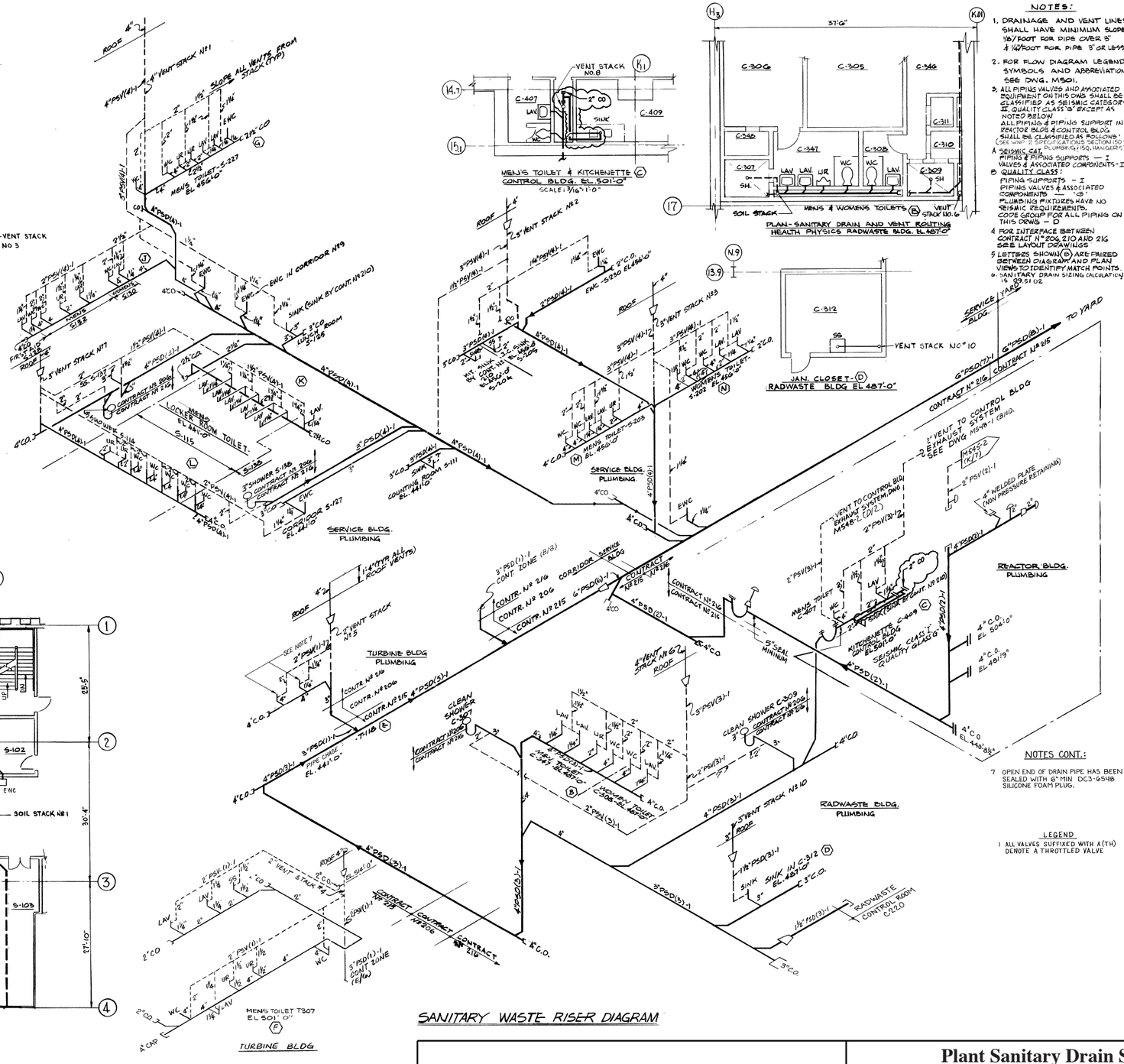

NOTES:

1. DRAINAGE AND VENT LINES SHALL HAVE MINIMUM SLOPE 1/8" PER FOOT FOR PIPE OVER 3" & 1/4" PER FOOT FOR PIPE 3" OR LESS
2. FOR FLOW DIAGRAM LEGEND, SYMBOLS AND ABBREVIATIONS SEE DWG. M501.
3. ALL PIPING VALVES AND ASSOCIATED EQUIPMENT ON THIS DWG SHALL BE CLASSIFIED AS SEISMIC CATEGORY II, QUALITY CLASS 'G' EXCEPT AS NOTED BELOW
   ALL PIPING & PIPING SUPPORT IN REACTOR BLDG & CONTROL BLDG SHALL BE CLASSIFIED AS FOLLOWS: (SEE M-P SYS DESIGN CRITERIA SECTION 3.7, PLUMBING/HVAC, PLUMBING/SQ. HANGERS)
   A SEISMIC CAT
   PIPING & PIPING SUPPORTS — I
   VALVES & ASSOCIATED COMPONENTS - II
   B QUALITY CLASS:
   PIPING SUPPORTS — I
   PIPING VALVES & ASSOCIATED COMPONENTS — G1
   PLUMBING FIXTURES HAVE NO SEISMIC REQUIREMENTS.
   CODE GROUP FOR ALL PIPING ON THIS DRWG. — D
4. FOR INTERFACE BETWEEN CONTRACT N° 206, 210 AND 216 SEE LAYOUT DRAWINGS
5. LETTERS SHOWN (E) ARE PAIRED BETWEEN DIAGRAM AND PLAN VIEWS TO IDENTIFY MATCH POINTS.
6. SANITARY DRAIN SIZING CALCULATION IS 09.51.02

NOTES CONT.:

7 OPEN END OF DRAIN PIPE HAS BEEN SEALED WITH 6" MIN DC3-6548 SILICONE FOAM PLUG.

LEGEND

I ALL VALVES SUFFIXED WITH A(TH) DENOTE A THROTTLED VALVE

Columbia Generating Station **Final Safety Analysis Report**	**Plant Sanitary Drain System**	
	Draw. No. P542	Rev. 20	Figure 9.2-6

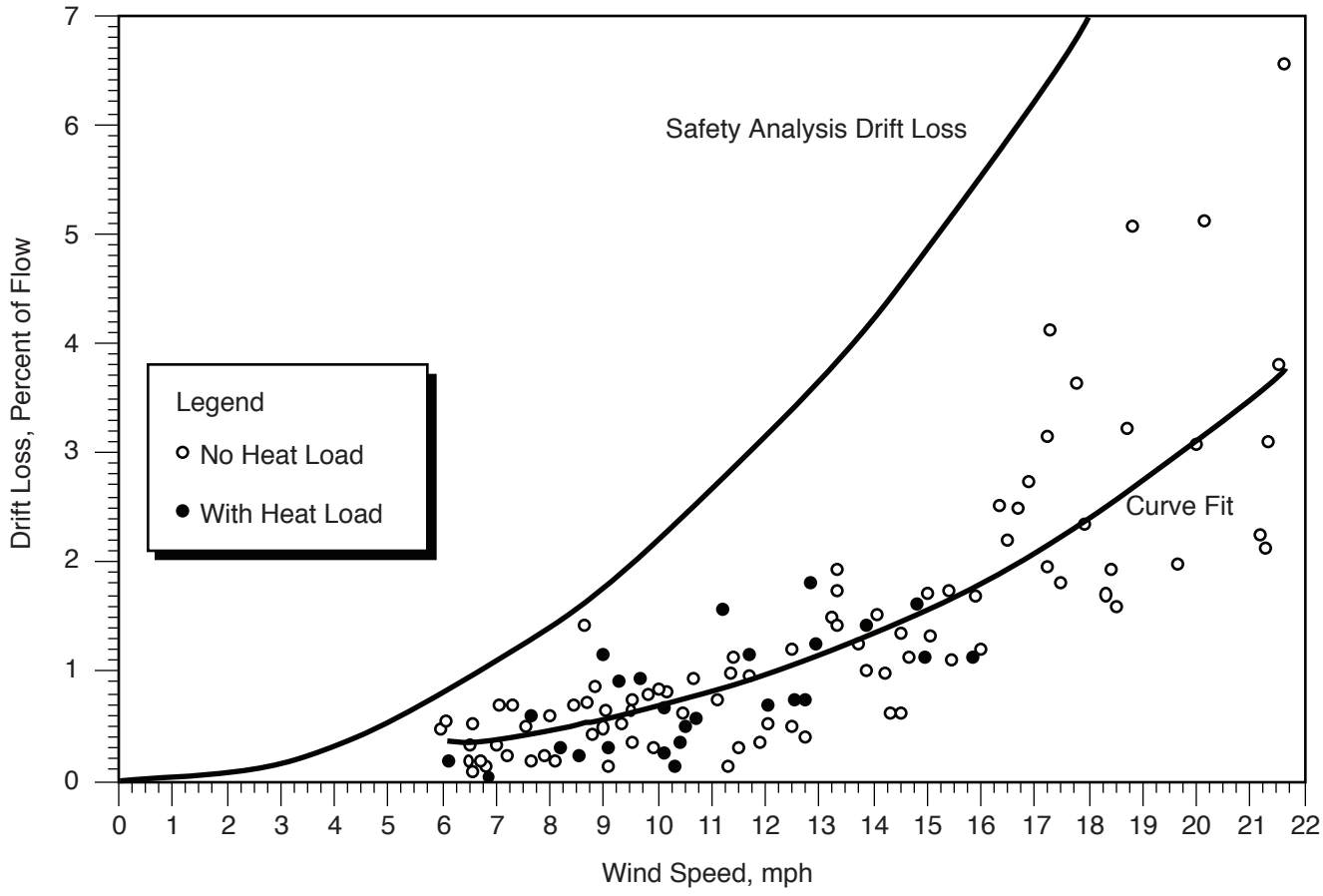

Columbia Generating Station
Final Safety Analysis Report

Drift Loss Test Results

Draw. No. 960690.76	Rev.	Figure 9.2-8

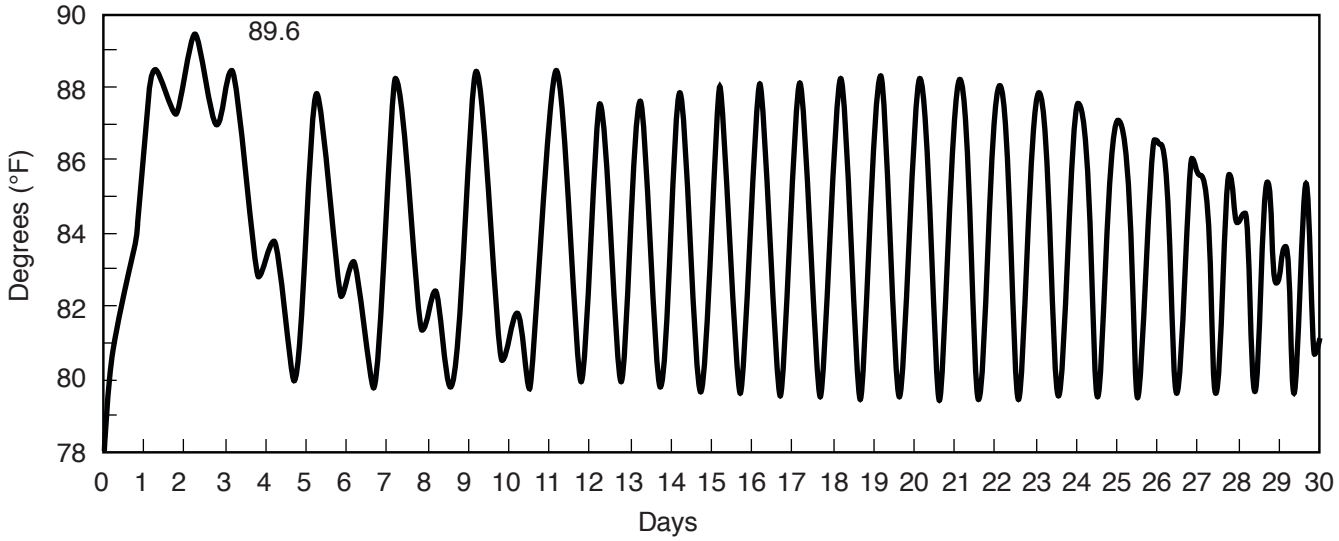

Columbia Generating Station Final Safety Analysis Report	Temperature Response Following Design Basis LOCA (Standby Service Water)		
	Draw. No. 960222.21	Rev.	Figure 9.2-9

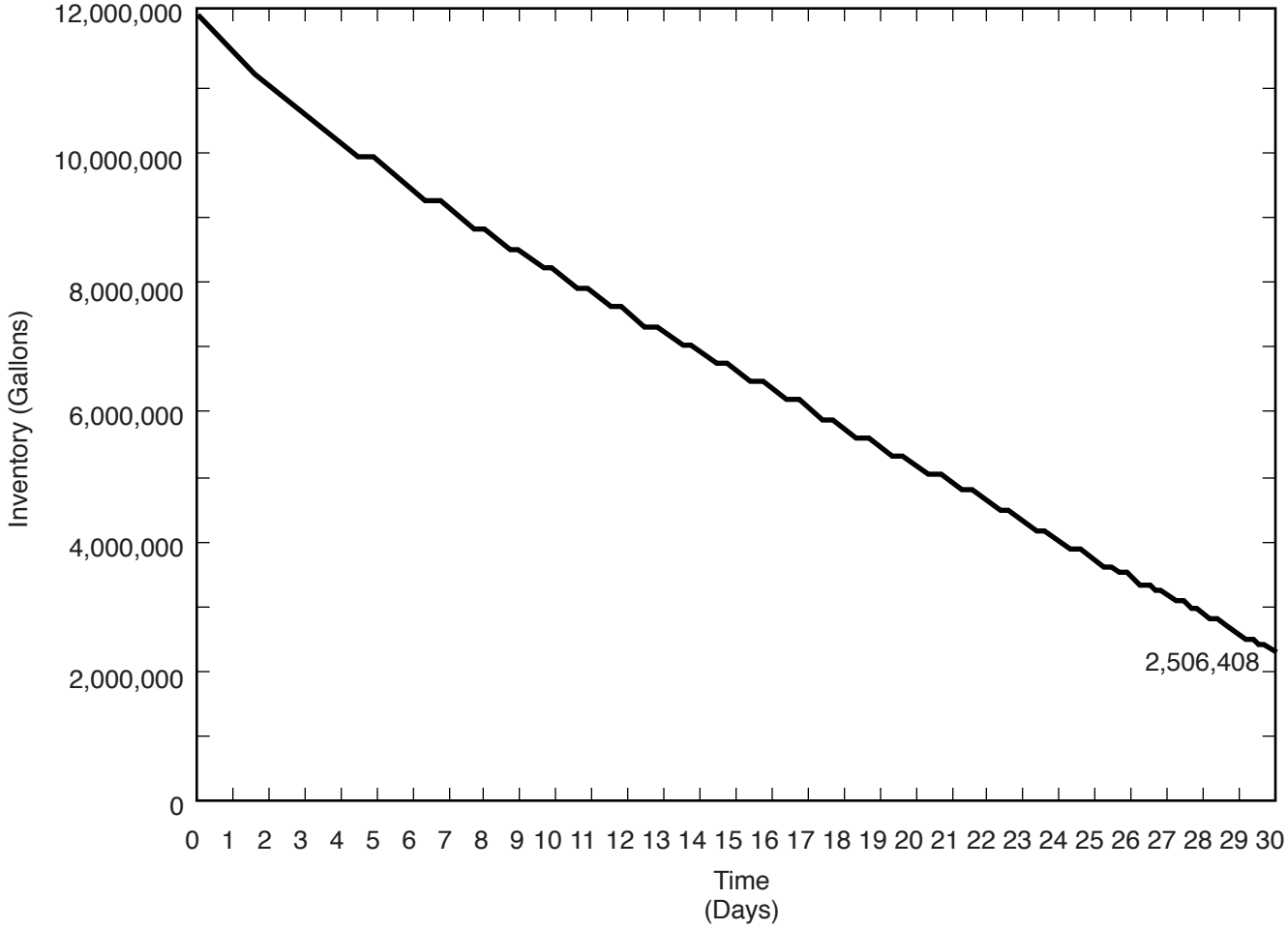

Columbia Generating Station **Final Safety Analysis Report**	**Water Inventory in UHS Following Design Basis LOCA**		
	Draw. No. **960222.22**	Rev.	Figure **9.2-10**

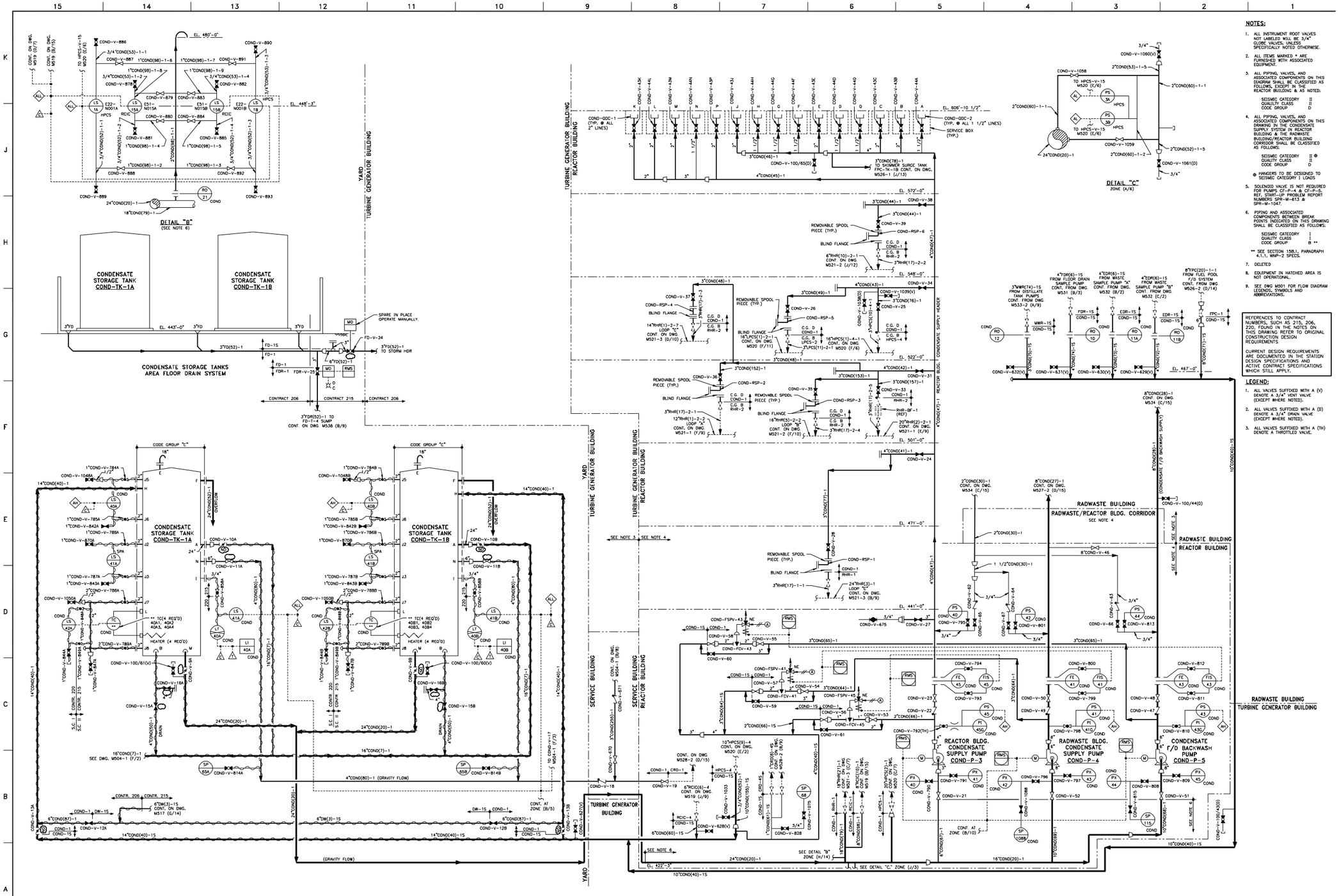

NOTES:

1. ALL INSTRUMENT ROOT VALVES NOT LABELED WILL BE 3/4" GLOBE VALVES, UNLESS SPECIFICALLY NOTED OTHERWISE.
2. ALL ITEMS MARKED * ARE FURNISHED WITH ASSOCIATED EQUIPMENT.
3. ALL PIPING, VALVES, AND ASSOCIATED COMPONENTS ON THIS DIAGRAM SHALL BE CLASSIFIED AS FOLLOWS, EXCEPT IN THE REACTOR BUILDING & AS NOTED:

   SEISMIC CATEGORY II
   QUALITY CLASS II
   CODE GROUP D

4. ALL PIPING, VALVES, AND ASSOCIATED COMPONENTS ON THIS DRAWING IN THE CONDENSATE SUPPLY SYSTEM IN REACTOR BUILDING & THE RADWASTE BUILDING/REACTOR BUILDING CORRIDOR SHALL BE CLASSIFIED AS FOLLOWS:

   SEISMIC CATEGORY II ⊕
   QUALITY CLASS II
   CODE GROUP D

   ⊕ HANGERS TO BE DESIGNED TO SEISMIC CATEGORY I LOADS
5. SOLENOID VALVE IS NOT REQUIRED FOR PUMPS CF-P-4 & CF-P-5. REF. START-UP PROBLEM REPORT NUMBERS SPR-M-613 & SPR-M-1047.
6. PIPING AND ASSOCIATED COMPONENTS BETWEEN BREAK POINTS INDICATED ON THIS DRAWING SHALL BE CLASSIFIED AS FOLLOWS:

   SEISMIC CATEGORY I
   QUALITY CLASS I
   CODE GROUP B **

   ** SEE SECTION 15B.1, PARAGRAPH 4.1.1, WNP-2 SPECS.
7. DELETED
8. EQUIPMENT IN HATCHED AREA IS NOT OPERATIONAL.
9. SEE DWG M501 FOR FLOW DIAGRAM LEGENDS, SYMBOLS AND ABBREVIATIONS.

REFERENCES TO CONTRACT NUMBERS, SUCH AS 215, 206, 220, FOUND IN THE NOTES ON THIS DRAWING REFER TO ORIGINAL CONSTRUCTION DESIGN REQUIREMENTS.

CURRENT DESIGN REQUIREMENTS ARE DOCUMENTED IN THE STATION DESIGN SPECIFICATIONS AND ACTIVE CONTRACT SPECIFICATIONS WHICH STILL APPLY.

LEGEND:

1. ALL VALVES SUFFIXED WITH A (V) DENOTE A 3/4" VENT VALVE (EXCEPT WHERE NOTED).
2. ALL VALVES SUFFIXED WITH A (D) DENOTE A 3/4" DRAIN VALVE (EXCEPT WHERE NOTED).
3. ALL VALVES SUFFIXED WITH A (TH) DENOTE A THROTTLED VALVE.

Columbia Generating Station
Final Safety Analysis Report

Condensate Supply System

Draw. No. M527-1 | Rev. 104 | Figure 9.2-11.1

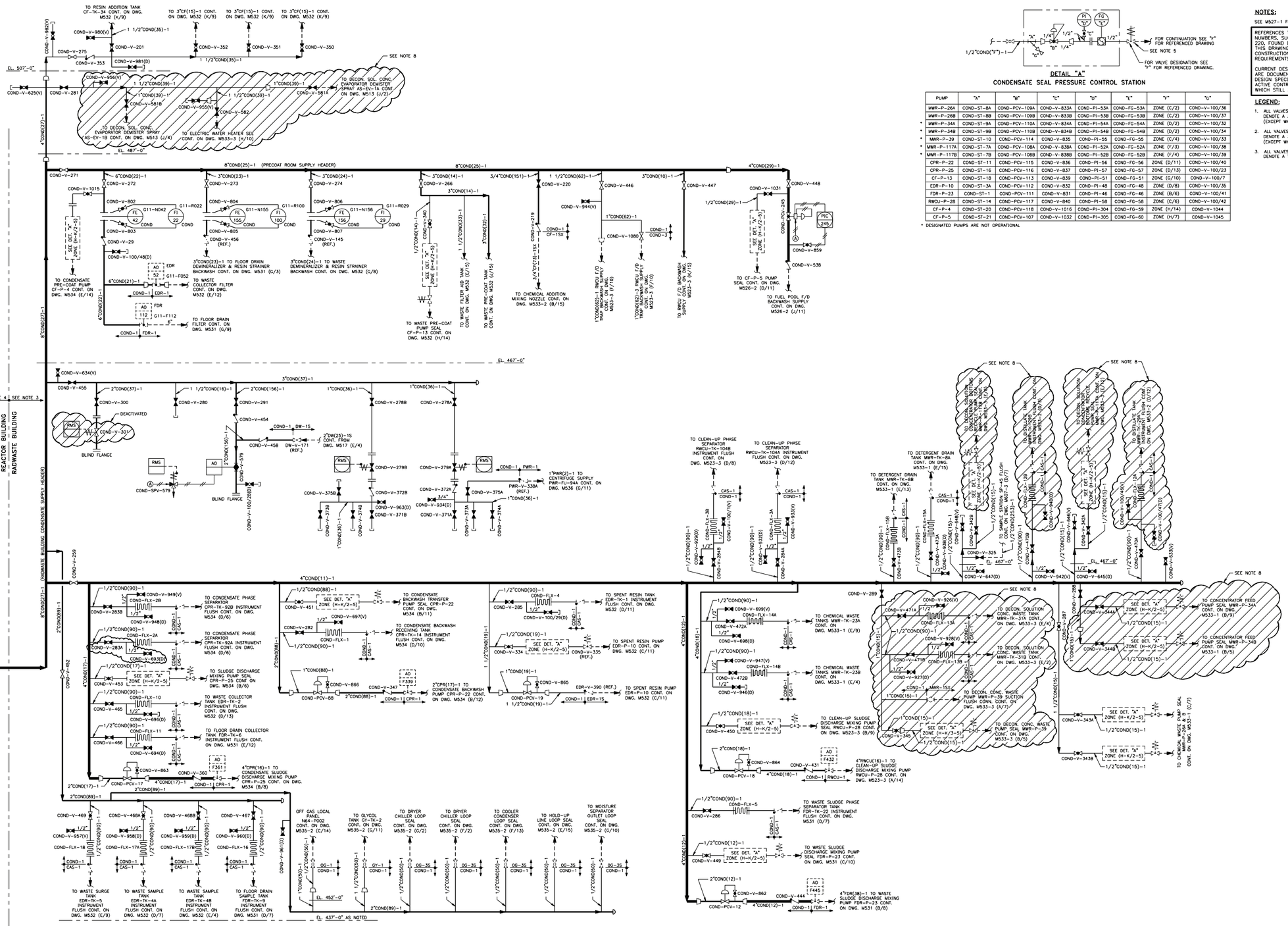

DETAIL "A"

CONDENSATE SEAL PRESSURE CONTROL STATION

PUMP	"A"	"B"	"C"	"D"	"E"	"F"	"G"
MWR-P-26A	COND-ST-8A	COND-PCV-109A	COND-V-833A	COND-PI-53A	COND-FG-53A	ZONE (C/2)	COND-V-100/36
MWR-P-26B	COND-ST-8B	COND-PCV-109B	COND-V-833B	COND-PI-53B	COND-FG-53B	ZONE (C/2)	COND-V-100/37
* MWR-P-34A	COND-ST-9A	COND-PCV-110A	COND-V-834A	COND-PI-54A	COND-FG-54A	ZONE (D/2)	COND-V-100/32
* MWR-P-34B	COND-ST-9B	COND-PCV-110B	COND-V-834B	COND-PI-54B	COND-FG-54B	ZONE (D/2)	COND-V-100/34
* MWR-P-39	COND-ST-10	COND-PCV-114	COND-V-835	COND-PI-55	COND-FG-55	ZONE (C/4)	COND-V-100/33
* MWR-P-117A	COND-ST-7A	COND-PCV-108A	COND-V-838A	COND-PI-52A	COND-FG-52A	ZONE (F/3)	COND-V-100/38
* MWR-P-117B	COND-ST-7B	COND-PCV-108B	COND-V-838B	COND-PI-52B	COND-FG-52B	ZONE (F/4)	COND-V-100/39
CPR-P-22	COND-ST-11	COND-PCV-115	COND-V-836	COND-PI-56	COND-FG-56	ZONE (D/11)	COND-V-100/40
CPR-P-25	COND-ST-16	COND-PCV-116	COND-V-837	COND-PI-57	COND-FG-57	ZONE (D/13)	COND-V-100/23
CF-P-13	COND-ST-18	COND-PCV-113	COND-V-839	COND-PI-51	COND-FG-51	ZONE (G/10)	COND-V-100/7
EDR-P-10	COND-ST-3A	COND-PCV-112	COND-V-832	COND-PI-48	COND-FG-48	ZONE (D/8)	COND-V-100/35
FDR-P-23	COND-ST-1	COND-PCV-111	COND-V-831	COND-PI-46	COND-FG-46	ZONE (B/6)	COND-V-100/41
RWCU-P-28	COND-ST-14	COND-PCV-117	COND-V-840	COND-PI-58	COND-FG-58	ZONE (C/6)	COND-V-100/42
CF-P-4	COND-ST-20	COND-PCV-118	COND-V-1016	COND-PI-304	COND-FG-59	ZONE (H/14)	COND-V-1044
CF-P-5	COND-ST-21	COND-PCV-107	COND-V-1032	COND-PI-305	COND-FG-60	ZONE (H/7)	COND-V-1045

* DESIGNATED PUMPS ARE NOT OPERATIONAL

NOTES:

SEE M527-1 FOR NOTES

REFERENCES TO CONTRACT NUMBERS, SUCH AS 215, 206, 220, FOUND IN THE NOTES ON THIS DRAWING REFER TO ORIGINAL CONSTRUCTION DESIGN REQUIREMENTS.

CURRENT DESIGN REQUIREMENTS ARE DOCUMENTED IN THE STATION DESIGN SPECIFICATIONS AND ACTIVE CONTRACT SPECIFICATIONS WHICH STILL APPLY.

LEGEND:

1. ALL VALVES SUFFIXED WITH A (V) DENOTE A 3/4" VENT VALVE (EXCEPT WHERE NOTED).
2. ALL VALVES SUFFIXED WITH A (D) DENOTE A 3/4" DRAIN VALVE (EXCEPT WHERE NOTED).
3. ALL VALVES SUFFIXED WITH A (TH) DENOTE A THROTTLED VALVE.

Columbia Generating Station
Final Safety Analysis Report

Condensate Supply System

Draw. No. M527-2	Rev. 4	Figure 9.2-11.2

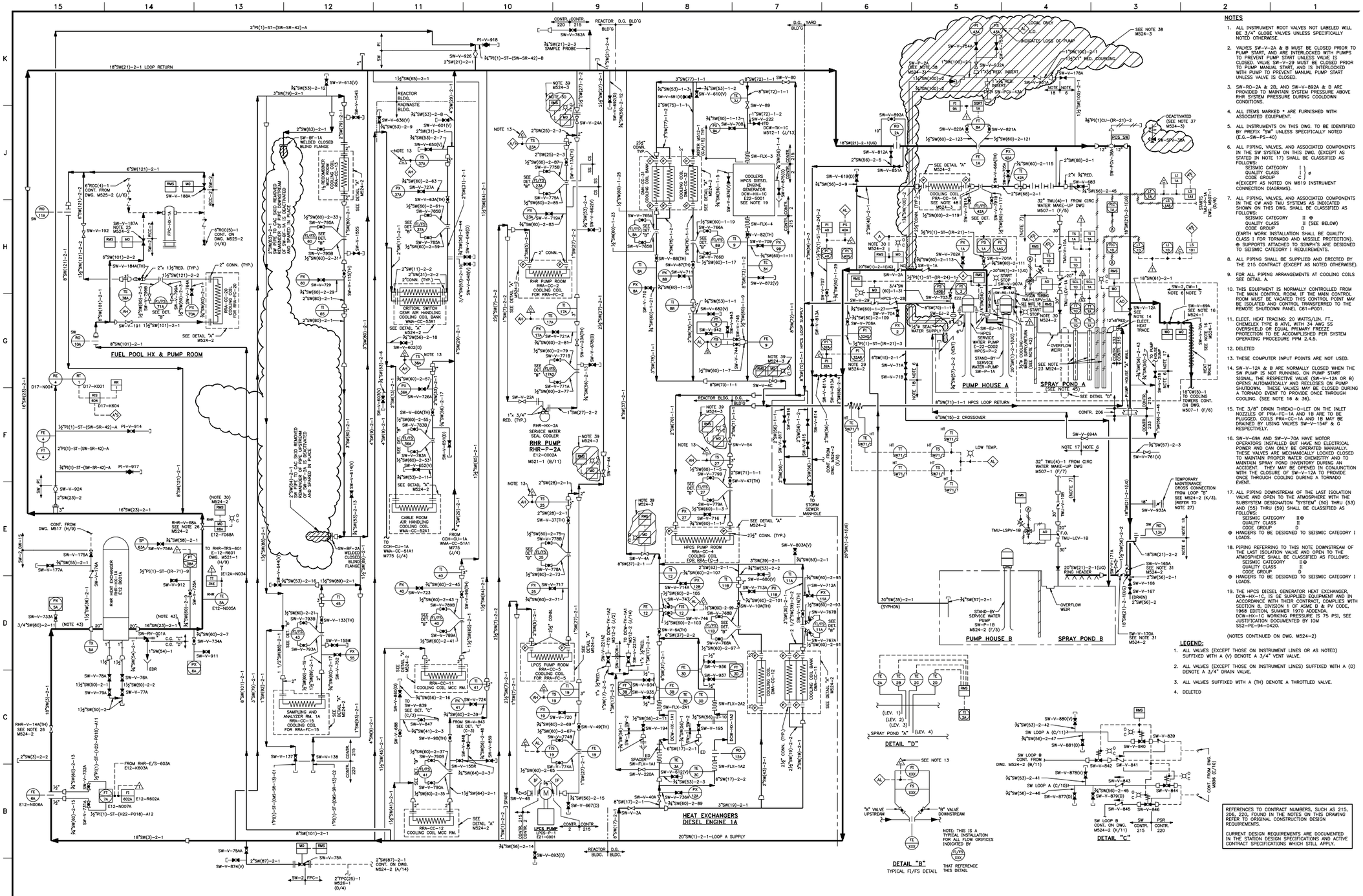
FUEL POOL HX & PUMP ROOM
RHR PUMP RHR-P-2A
E12-C002A
M521-1 (B/11)
HEAT EXCHANGERS DIESEL ENGINE 1A
PUMP HOUSE A
SPRAY POND A
PUMP HOUSE B
SPRAY POND B
RHR HEAT EXCHANGER ENR-EXC-1A E12-D001A
LPCS PUMP E21-C001
DETAIL "B"
TYPICAL F1/FS DETAIL
DETAIL "C"
DETAIL "D"
"A" VALVE UPSTREAM
"B" VALVE DOWNSTREAM
NOTE: THIS IS A TYPICAL INSTALLATION FOR ALL FLOW ORIFICES INDICATED BY F1/FS XXX
THAT REFERENCE THIS DETAIL
SEE DETAIL "A" M524-2
SEE DETAIL "B" M524-2
SEE DETAIL "C" M524-2
SEE DETAIL "D" M524-2
SEE NOTE 13
SEE NOTE 39 M524-3
SEE NOTE 50 M524-3
SEE NOTE 48 M524-3
SEE NOTE 30 M524-2
SEE NOTE 43
SEE NOTE 23 M524-2
SEE NOTE 45
SEE NOTE 42
SEE NOTE 16 M524-1
SEE NOTE 18
SEE NOTE 6
SEE NOTE 7
SEE NOTE 14 M524-1
SEE NOTE 37 M524-3
SEE NOTE 38 M524-3
SEE NOTE 31 M524-2
SEE NOTE 27
SEE NOTE 29 M524-2
SEE NOTE 15
SEE NOTE 17
SEE NOTE 10
SEE NOTE 11
SEE NOTE 12
SEE NOTE 9
SEE NOTE 8
SEE NOTE 4
SEE NOTE 5
SEE NOTE 3
SEE NOTE 2
SEE NOTE 1
CONT. FROM DWG. M517 (H/9)
CONT. FROM DWG. M525-2 (J/6)
CONT. FROM DWG. M524-2 (K/3)
CONT. FROM DWG. M524-2 (B/11)
CONT. FROM DWG. M524-2 (K/11)
CONT. FROM DWG. M524-2 (A/14)
CONT. FROM DWG. M524-2 (D/4)
CONT. FROM DWG. M524-2 (D/10)
CONT. FROM DWG. M524-2 (D/12)
CONT. FROM DWG. M524-2 (D/13)
CONT. FROM DWG. M524-2 (D/14)
CONT. FROM DWG. M524-2 (D/15)
CONT. FROM DWG. M524-2 (D/16)
CONT. FROM DWG. M524-2 (D/17)
CONT. FROM DWG. M524-2 (D/18)
CONT. FROM DWG. M524-2 (D/19)
CONT. FROM DWG. M524-2

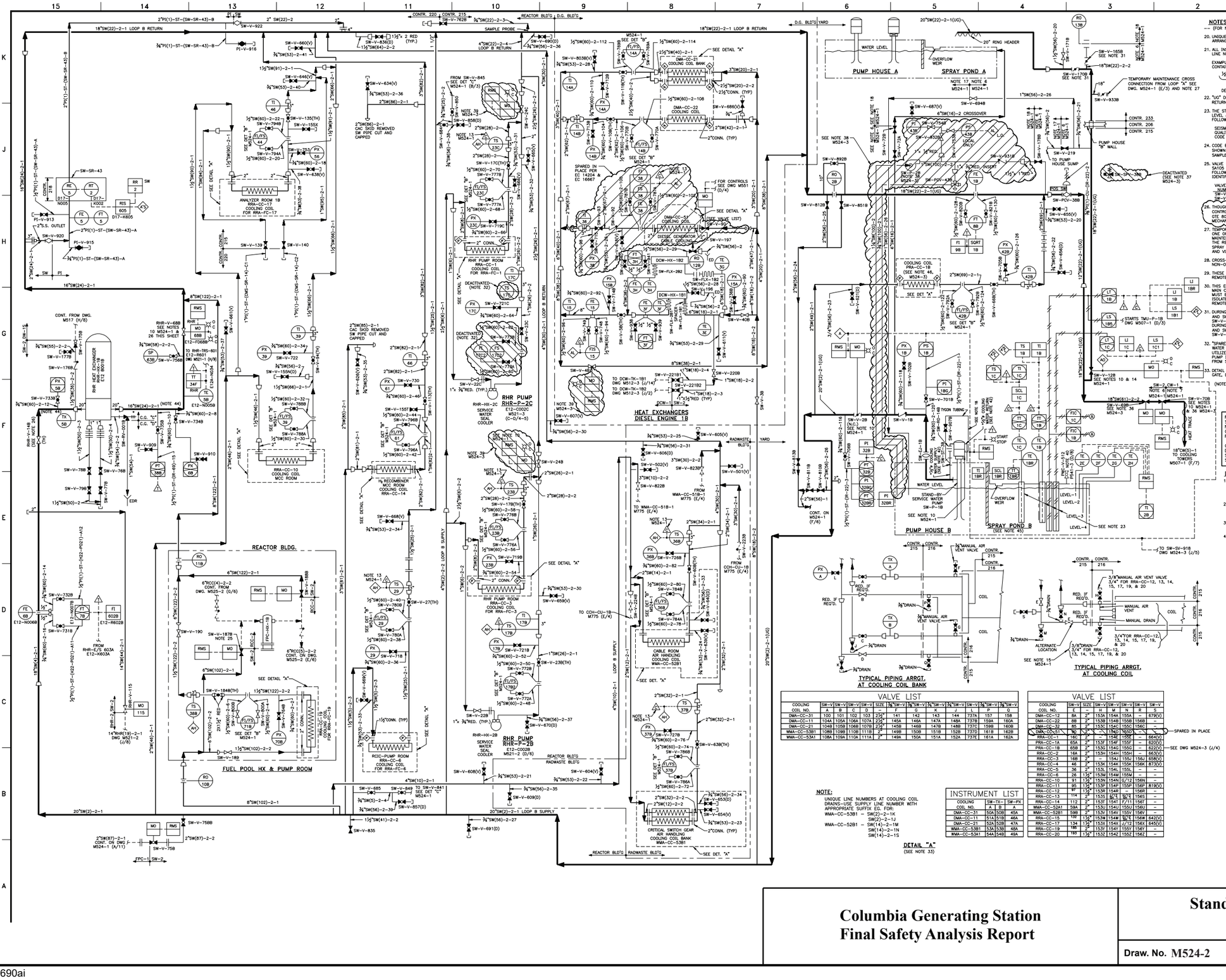
RHR HEAT EXCHANGER E12 B001B
RHR PUMP RHR-P-2C
RHR PUMP RHR-P-2B
HEAT EXCHANGERS DIESEL ENGINE 1B
PUMP HOUSE A
SPRAY POND A
PUMP HOUSE B
SPRAY POND B
REACTOR BLDG.
FUEL POOL HX & PUMP ROOM
ANALYZER ROOM 1B RRA-CC-17 COOLING COIL FOR RRA-FC-17
RRA-CC-10 COOLING COIL MCC ROOM
RHR PUMP ROOM RRA-CC-3 COOLING COIL FOR RRA-FC-3
RHR PUMP ROOM RRA-CC-2 COOLING COIL FOR RRA-FC-2
RHR PUMP ROOM RRA-CC-1B COOLING COIL FOR RRA-FC-1B
RCIC-PUMP ROOM RRA-CC-8 COOLING COIL FOR RRA-FC-8
H2 RECOMBINER MCC ROOM COOLING COIL RRA-CC-14
CABLE ROOM AIR HANDLING COOLING COIL WMA-CC-53B1
CRITICAL SWITCH GEAR AIR HANDLING COOLING COIL BANK WMA-CC-53B1
DIESEL GENERATOR CABLE COOLING
DMA-CC-21 COOLING COIL BANK
DMA-CC-22 COOLING COIL
DMA-CC-51 COOLING COIL
COOLING COIL PRA-CC-1B (SEE NOTE 46, M524-3)
TYPICAL PIPING ARRGT. AT COOLING COIL BANK
TYPICAL PIPING ARRGT. AT COOLING COIL
CONTR. 220
CONTR. 215
CONTR. 216
CONTR. 233
CONTR. 206
REACTOR BLD'G
D.G. BLD'G
RADWASTE BLD'G
YARD
SAMPLE PROBE
WATER LEVEL
OVERFLOW WEIR
20" RING HEADER
TEMPORARY MAINTENANCE CROSS CONNECTION FROM LOOP "A" SEE DWG. M524-1 (E/3) AND NOTE 27
PUMP HOUSE "B" WALL
DEACTIVATED (SEE NOTE 37 M524-3)
TO PUMP HOUSE SUMP
STARTS TMU-P-1B DWG M507-1 (D/3)
STAND-BY SERVICE WATER PUMP SW-P-1B
SEE NOTE 10 M524-1
SEE NOTE 16
SEE NOTE 23
LEVEL-1
LEVEL-2
LEVEL-3
LEVEL-4
TO SW-SV-918 DWG M524-3 (J/5)
TO COOLING TOWERS DWG M507-1 (F/7)
TO SW-SV-1888
TO SW-SV-1889
FROM RHR-E/S 603A E12-N603A
FROM RHR-E/S 603B E12-N603B
EDR
SW-RV-0011
SW-RV-115
SW-RV-119
SW-RV-120
SW-RV-121
SW-RV-122
SW-RV-123
SW-RV-124
SW-RV-125
SW-RV-126
SW-RV-127
SW-RV-128
SW-RV-129
SW-RV-130
SW-RV-131
SW-RV-132
SW-RV-133
SW-RV-134
SW-RV-135
SW-RV-136
SW-RV-137
SW-RV-138
SW-RV-139
SW-RV-140
SW-RV-141
SW-RV-142
SW-RV-143
SW-RV-144
SW-RV-145
SW-RV-146
SW-RV-147
SW-RV-148
SW-RV-149
SW-RV-150
SW-RV-151
SW-RV-152
SW-RV-153
SW-RV-154
SW-RV-155
SW-RV-156
SW-RV-157
SW-RV-158

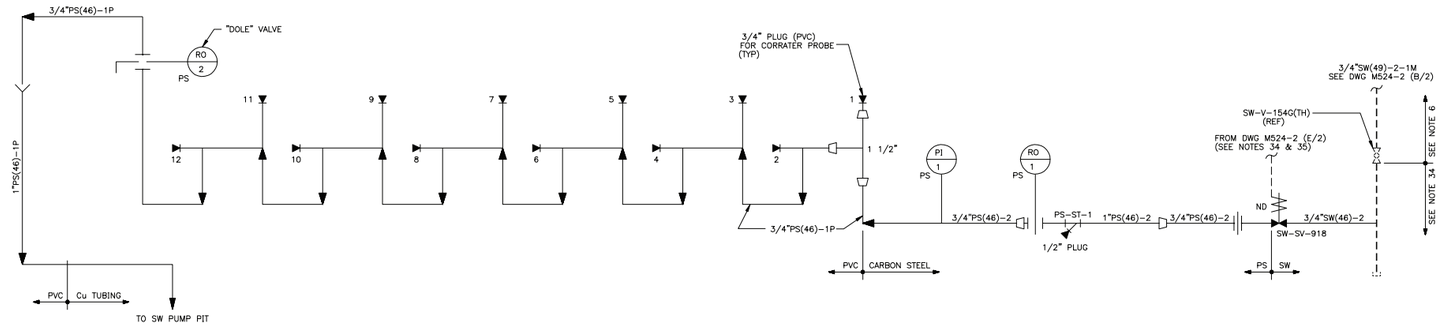

NOTES:

(FOR NOTES 1 THRU 19 SEE M524-1. FOR NOTES 20 THRU 33 SEE M524-2)

34. VALVE SW-SV-918 SHALL BE CLASSIFIED AS FOLLOWS:

SEISMIC CATEGORY	I⊕
QUALITY CLASS	II
CODE GROUP	D

CARBON STEEL SW AND PS PIPING DOWNSTREAM OF SW-V-154G SHALL BE CLASSIFIED AS FOLLOWS:

SEISMIC CATEGORY	I⊕
QUALITY CLASS	II
CODE GROUP	D

PVC PS PIPING DOWNSTREAM OF SW-SV-918 SHALL BE CLASSIFIED AS FOLLOWS:

SEISMIC CATEGORY	II
QUALITY CLASS	II
CODE GROUP	N/A

PIPING LINE NUMBER 1" SW (54)-1 LOCATED DOWNSTREAM OF RELIEF VALVES SW-RV-001A & SW-RV-001B SHALL BE CLASSIFIED AS FOLLOWS:

SEISMIC CATEGORY	I
QUALITY CLASS	II
CODE GROUP	D

⊕ HANGERS TO BE DESIGNED TO SEISMIC CATEGORY I LOADS

35. SW-SV-918 IS INTERLOCKED WITH SW-V-12B SUCH THAT IT IS OPEN ONLY WHEN SW-P-1B IS RUNNING (SEE NOTE 14)

36. SW-V-69B HAS A MOTOR OPERATOR INSTALLED BUT HAS NO ELECTRICAL POWER AND CAN ONLY BE OPERATED MANUALLY. SW-V-70B HAS ITS MOTOR CONTROL CENTER COMPARTMENT LOCKED IN THE "OFF" POSITION. THESE VALVES ARE MECHANICALLY LOCKED CLOSED TO MAINTAIN PROPER WATER CHEMISTRY AND TO MAINTAIN SPRAY POND INVENTORY DURING AN ACCIDENT. THEY MAY BE OPENED IN CONJUNCTION WITH THE CLOSURE OF SW-V-12B TO PROVIDE ONCE THROUGH COOLING DURING A TORNADO EVENT.

37. "SPARED IN PLACE" SW-SPV-38A & SW-SPV-38B CONTROLLED AIR TO SW-PCV-38A & SW-PCV-38B. SW-PCV-38A & SW-PCV-38B ARE LOCKED OPEN. THIS ELIMINATES THE NEED FOR SW-SPV-38A & SW-SPV-38B WHICH HAVE BEEN DISCONNECTED.

38. THE KEEPFULL SYSTEM IS NOT REQUIRED AND HAS BEEN DEACTIVATED AND SPARED IN PLACE.

39. VALVE MOTOR AND OPERATOR "SPARED IN PLACE". CABLES DE-TERMINATED.

40. MAKEUP WATER SUPPLY FROM THE POTABLE WATER SYSTEM. SEE P541 (G/13).

41. DELETED

42. SW-M-P/1A AND SW-M-P/1B 1/2" COOLING WATER SUPPLY/RETURN PIPING SHALL BE CLASSIFIED AS FOLLOWS:

SEISMIC CATEGORY	I
QUALITY CLASS	I
CODE GROUP	D

43. FOR PERIODIC THERMAL PERFORMANCE TESTING OF RHR-HX-1A, FOUR THERMISTORS ARE INSTALLED ON THE SERVICE WATER INLET SIDE OF RHR-HX-1A AND EIGHT THERMISTORS ARE INSTALLED ON THE SERVICE WATER OUTLET SIDE OF RHR-HX-1A. THESE ARE MOUNTED QCII+, SC IM.

44. FOR PERIODIC THERMAL PERFORMANCE TESTING OF RHR-HX-1B, FOUR THERMISTORS ARE INSTALLED ON THE SERVICE WATER INLET SIDE OF RHR-HX-1B AND EIGHT THERMISTORS ARE INSTALLED ON THE SERVICE WATER OUTLET SIDE OF RHR-HX-1B. THESE ARE MOUNTED QCII+, SC IM.

45. FOR SERVICE WATER CHEMICAL FEED (SWCF) ADDITION INTO SERVICE WATER PONDS "A" AND "B" SEE CVI 897-00,1 FOR DETAILS.

46. FOR PERIODIC THERMAL PERFORMANCE TESTING OF PRA-FC-1B, FOUR THERMOCOUPLES ARE INSTALLED ON THE SW INLET AND TWO THERMOCOUPLES ARE INSTALLED ON THE SW OUTLET OF PRA-CC-1B. THESE ARE MOUNTED QC II+ SC 1M.

47. SEE DWG M501 FOR FLOW DIAGRAM LEGENDS, SYMBOLS AND ABBREVIATIONS.

48. FOR PERIODIC THERMAL PERFORMANCE TESTING OF PRA-FC-1A, FOUR THERMOCOUPLES ARE INSTALLED ON THE SW INLET AND TWO THERMOCOUPLES ARE INSTALLED ON THE SW OUTLET OF PRA-CC-1A. THESE ARE MOUNTED QC II+ SC 1M.

Columbia Generating Station
Final Safety Analysis Report

Standby Service Water System

Draw. No. M524-3	Rev. 24	Figure 9.2-12.3

NOTES:

1. ALL TEMPERATURE WELL CONNECTIONS ARE 1 1/2" UNLESS SPECIFICALLY NOTED OTHERWISE.
2. ALL INSTRUMENTATION ON THIS DRAWING TO BE IDENTIFIED BY PREFIX "CJW" UNLESS SPECIFICALLY NOTED OTHERWISE.
3. ALL INSTRUMENT FOOT VALVES NOT LABELED WILL BE 3/4" GLOBE VALVES UNLESS SPECIFICALLY NOTED OTHERWISE.
4. ALL PIPING, VALVES AND ASSOCIATED COMPONENTS ON THIS DRAWING IN THE CJW SYSTEM SHALL BE CLASSIFIED AS FOLLOWS:

   QUALITY CLASS II
   SEISMIC CATEGORY II
   CODE GROUP D

5. SEE DWG M501 FOR FLOW DIAGRAM LEGENDS, SYMBOLS AND ABBREVIATIONS.

LEGEND:

1. ALL VALVES SUFFIXED WITH A (V) DENOTE A 3/4" VENT VALVE (EXCEPT WHERE NOTED).
2. ALL VALVES SUFFIXED WITH A (D) DENOTE A 3/4" DRAIN VALVE (EXCEPT WHERE NOTED).
3. ALL VALVES SUFFIXED WITH A (TH) DENOTE A THROTTLED VALVE.

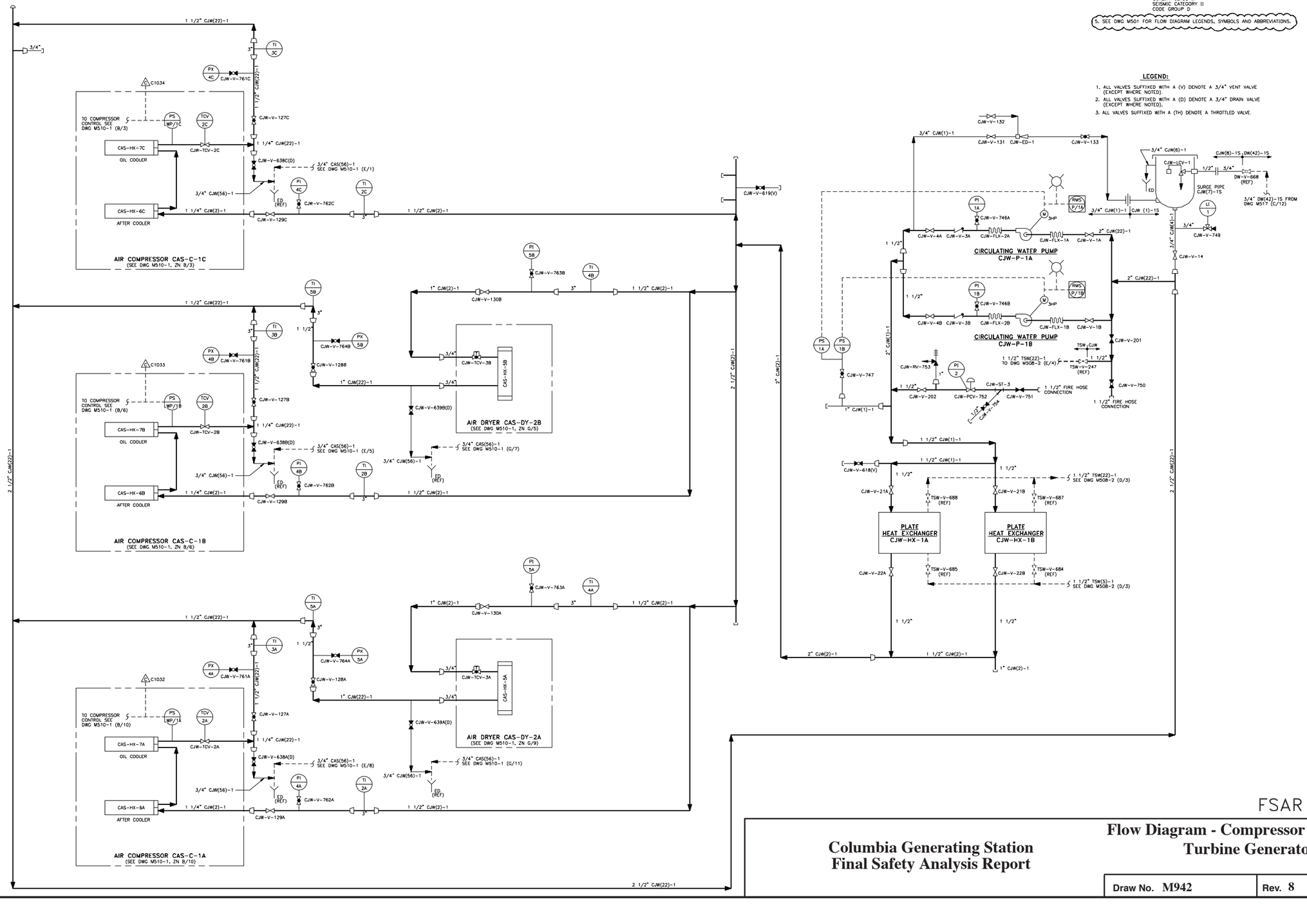

FSAR FIG.

Columbia Generating Station
Final Safety Analysis Report

Flow Diagram - Compressor Jacket Water System
Turbine Generator Building

Draw No. M942	Rev. 8	Figure 9.2-15

9.3 PROCESS AUXILIARIES

9.3.1 COMPRESSED AIR SYSTEMS

The compressed air systems consist of the control and service air systems (CAS and SA) and the containment instrument air (CIA) system.

9.3.1.1 Design Bases

9.3.1.1.1 Control and Service Air Systems

The CAS and the SA system are supplied with oil-free compressed air from three rotary screw compressors, two refrigerated dryers, two sets of filters, and three air receivers located in the turbine generator building and by one rotary screw compressor and refrigerated filtered dryer in the radwaste building. The CAS receivers are maintained at a pressure between 110 psig and 120 psig by the compression loading control devices. Normally, the SA compressor and one CAS compressor will meet the plant demand for compressed air. Should the air pressure in the three CAS air receivers, which are interconnected, drop to less than the running CAS compressor setpoint, a second and if necessary, a third CAS compressor will start. If pressure in the CAS supply header drops to less than 80 psig, the SA system will be automatically isolated from the CAS air receivers to conserve air for use in the CAS.

The CAS provides instrument quality air, oil-free, maximum particle size of 1 micron, and dried to an atmospheric dewpoint of -40°F, throughout the plant for pneumatic instrumentation, controls and actuators. Air is drawn from the air receivers, is passed through prefilters, a desiccant dryer and afterfilters, to distribution piping.

A complete loss of control air will result in a plant shutdown, but none of the reactor systems require control air to achieve and maintain a safe shutdown condition.

The SA system provides oil-free compressed air from the CAS air receivers and/or from the SA receiver in the radwaste building, for use in process functions such as backwashing filters or demineralizers, for general services and maintenance uses throughout the plant, and as a source of breathing air.

The CAS and SA system are generally designed to Safety Class G, Seismic Category II requirements; however, piping and equipment in the reactor building, diesel generator building, and the standby service water (SW) pump houses are supported to Seismic Category I requirements. Pressure vessels are designed and constructed in accordance with the American Society of Mechanical Engineers (ASME) Boiler and Pressure Vessel (B&PV) Code Section VIII. Piping and valves are designed and constructed in accordance with the ANSI B31.1 Power Piping Code, except for piping or valves performing a primary containment function and the local control piping at the outer main steam isolation valves (MSIV). These

portions of the piping are Quality Class I, Seismic Category I, and are designed and constructed in accordance with ASME B&PV Code Section III, Class 2 and Class 3, respectively.

9.3.1.1.2 Containment Instrument Air System

The CIA system is designed to deliver clean, dry, compressed gas, nitrogen or air, to the following valve actuator accumulators and valve pilot controls inside primary containment. Seven individual accumulators for the seven main steam relief valves (MSRV) dedicated to the automatic depressurization system (ADS) function are supplied with gas through two separate isolable headers at a nominal pressure of 180 psig. The four inboard MSIV actuator accumulators, 18 MSRV actuator accumulators for the power-assisted pressure relief function, and two reactor recirculation cooling (RRC) pump seal staging drain valve pilot control valves are supplied with gas at a reduced nominal pressure of 100 psig. The CIA system also provides nitrogen to the set pressure verification device (SPVD) system. For normal plant operation, nitrogen is supplied from the containment nitrogen (CN) system cryogenic storage vessel which is also the source of nitrogen for inerting the primary containment atmosphere. Should the normal nitrogen supply become unavailable, the gas supply piping to the ADS function accumulators will automatically isolate from the cryogenic nitrogen supply, and the ADS accumulator backup compressed gas manifold subsystems will provide a nominal pressure of 180 psig nitrogen from banks of high pressure compressed nitrogen cylinders. The designed pneumatic supply to the ADS accumulator is such that, following a failure of the safety-related pneumatic supply to the accumulator, at least two valve actuations can occur with the drywell at 70% of design pressure.

The 100 psig line does not have an automatic backup supply, but provision has been made for supplying air from the CAS system through the CIA dryer and filters via manually actuated intertie valves in lieu of the normal CN supply.

The piping for normal supply of compressed nitrogen or air, that is outboard of the primary containment isolation valves, is designed to the ANSI B31.1 Power Piping Code, and pressure vessels are constructed to the rules of the ASME B&PV Code Section VIII. Piping penetrating primary containment and inside of primary containment, from the outermost containment isolation valves to the point of use valve connections, is constructed to Safety Class 2, ASME B&PV Code Section III, Class 2, Seismic Category I, requirements; except that the flexible connectors at the four inboard MSIV actuator supply valves are equivalent to but are not ASME Section III stamped items. Piping located in the reactor building and the diesel generator building is supported by Seismic Category I supports, although most of the non-ADS piping itself is designed to Seismic Category II loadings. The ADS function accumulator backup compressed nitrogen supply subsystems, from the normal supply isolation valves and from the outboard containment isolation valves, to, but not including, the compressed nitrogen cylinders, pressure regulators and overpressure relief valves, are constructed to ASME B&PV Code Section III Class 3 rules including Seismic Category I load conditions. An exception to this

ASME statement occurs at the pressure control valve stations in the diesel generator building corridor, where the sections of line containing the pressure control valve in each station is non-ASME (due to the unavailability of ASME pressure control valves), but is isolable and bypassable via ASME manually operable valves. The compressed gas cylinders are U.S. Department of Transportation approved commercial shipping containers. The cylinder valves, connectors, pressure regulators, and overpressure relief valves are approved by the Compressed Gas Association. The supports for the compressed gas cylinders, cylinder valves, connectors, pressure regulators, and overpressure relief valves are designed to Seismic Category I requirements.

9.3.1.2 System Description

9.3.1.2.1 Control and Service Air System

The CAS and SA system are shown schematically in Figure 9.3-1. Three compressors and three interconnected CAS air receivers in addition to one SA compressor and SA air receiver supply both control and SA requirements.

Each CAS compressor has a run-standby-stop local selector switch. When the selector switch is set in the run position, the compressor runs continuously and loads and unloads to maintain receiver pressure. When the selector switch is in standby position, the standby CAS compressor will automatically start when the CAS supply header pressure falls below the running CAS compressor setpoint. Normally one CAS and the SA compressor are running with at least one CAS compressor on standby.

The CAS compressors take suction from the room through 10 μ filters. The air is filtered down to 0.1 μ before entering the air receivers. The CAS compressors are cooled by the compressor jacket water (CJW) system. The CJW system is a closed loop system that transfers heat from the CAS system to the plant SW system.

The SA compressor takes suction from the outside to ensure that the air, which can be used for breathing purposes, is free from contaminants. The use of SA for breathing air is permissible with the use of local air filtration and local monitoring for carbon monoxide. System-level monitoring for carbon monoxide does not provide sufficient assurance of detection and mitigation of an adverse condition. The use of local filtration and monitoring enables the entire SA system to be used for breathing air.

The CAS and SA compressors pump an air/oil mixture to an internal air receiver/oil separator and then the air enters an internal aftercooler for cooling and moisture separation. The air is then discharged to a refrigerated dryer for further moisture removal. The air then enters a series of filters to remove any remaining particles and oil vapor from the air before entering the main air receivers.

Control air for station instrumentation and controls is processed through a refrigerated air dryer, a filter array, one of two 100%-capacity air dryer skids. Each skid has two 100% capacity prefilters and after filters arranged in parallel pairs to allow for replacement of the filter cartridge without interruption of air flow. The dryer on each skid is a heatless regenerative twin tower desiccant type which dries through one tower while the other is regenerating. A timer switches between towers and a purge economizer allows reduction in purge usage when the dryer is not operated at full capacity. There are two parallel refrigerated dryer and filter arrays, one or both of which may be operating at a given time.

Service air is distributed from the header to quick-disconnect hose connections where it is used for pneumatic service equipment and maintenance throughout the plant. Service air is also distributed for plant services such as demineralizer resin mixing and filter and demineralizer backwashing (see Figure 9.3-1).

Table 9.3-1 presents the major characteristics of the air compressors, receivers, and the air dryer for the control and SA.

9.3.1.2.2 Containment Instrument Air System

The CIA system is primarily a pressurized nitrogen system as shown in Figure 9.3-2. The location of components in this system in the Seismic Category I reactor building is shown in Figures 1.2-7, 1.2-8 and 1.2-9. During normal reactor operation, the CN system, discussed in Section 6.2.5.7, supplies pressurized nitrogen from an 11,000-gal (approximately 1 million-scf) cryogenic storage tank to meet the requirements of the following valves inside primary containment:

a. Full supply pressure (180 psig nominal) loads,

   1. Seven ADS function MSRVs and their individual ADS accumulators,

b. Reduced pressure (100 psig nominal) loads,

   1. Four inboard MSIV accumulators,

   2. Eighteen main steam safety/relief valves (SRVs) and their individual accumulators to be used for the power assisted pressure relief function, and

   3. Two RRC pump seal staging drain valve pilot control valves.

For a discussion of the function and operation of the ADS, see Sections 6.3 and 7.3. In case the cryogenic nitrogen source does not maintain supply pressure to the ADS accumulator supply headers, two backup nitrogen cylinder bank subsystems are provided to automatically

supply a nominal pressure of 180 psig nitrogen. A bank of 15 nitrogen cylinders supplies three of the ADS function accumulators, and a separate bank of 19 nitrogen cylinders supplies the other four ADS function accumulators (see Figure 9.3-2). Of these backup subsystems, only 14 nitrogen bottles for three ADS accumulators and 17 nitrogen bottles for the four ADS accumulators are necessary to provide a 30-day supply of nitrogen for the ADS function during a postulated loss-of-coolant accident (LOCA) condition. The backup subsystems also provide for manual SRV operation during station blackout (Appendix 8A). A remote nitrogen cylinder connection is provided to each subsystem to permit supplementing the cylinder banks through manual connection of portable nitrogen cylinders, and thus maintain the ADS function for at least 100 days following a postulated LOCA event. The remote cylinder connections are located in the diesel generator building corridor, adjacent to the reactor building, outside the secondary containment boundary, permitting personnel access to the connections under postaccident conditions.

Remote pressure control stations, each consisting of a bypassable pressure control valve, are schematically located downstream of the junction of the backup nitrogen cylinders supply with the remote backup nitrogen cylinder supply, and are physically located in the diesel generator building corridor. Thus, any problems with the pressure control valve could be accommodated by isolating it, to allow maintenance to be performed, while the ADS function header pressure was being maintained with the manual bypass valve. The pressure control valve allows the cylinder regulators to be set at a higher, but broad range, pressure.

The backup nitrogen cylinder banks are located in the reactor building vehicle air lock (railroad bay) and are accessible during normal reactor operation. Cylinders are valved to the supply piping in a sequential manner by a pressure-controlled programmer for each bank, so that only the number of cylinders necessary to maintain pressure in the ADS accumulator supply lines are drawn on. During normal reactor operation, minimum cylinder pressure is maintained as required by the Technical Specifications. The gas cylinders used may only be charged to 3000 psig, a limitation imposed by the system piping.

Once opened, the ADS valves are not expected to be cycled during the postaccident period; nevertheless, the air supply was conservatively sized to allow for extra cycles, since they may be used for alternate shutdown cooling.

In the event the cryogenic nitrogen source totally fails to supply the system requirements, the backup nitrogen cylinder banks will supply their respective ADS supply headers as described above and the headers will be automatically isolated from the common CIA supply line. The reduced pressure loads will then be without a source of pressurized gas until the CAS intertie valves are opened. A normally open vent between the two in-line series block valves could then be closed (the vent is there to guarantee no backleakage from CIA to CAS, which could lower the oxygen content of CAS/SA and result in an adverse condition should a breathing-air tap be in use). The relatively low pressure CAS supply would still be inadequate for the ADS headers, though, and they would still automatically be supplied as discussed above.

9.3.1.3 Safety Evaluation

9.3.1.3.1 Control and Service Air System

Operation of the CAS and SA systems are not required for the initiation of any engineered safety feature systems or for safe shutdown of the reactor.

A complete loss of the CAS system during power operation results in a plant shutdown with the following expected to occur: The SA system is automatically isolated as the CAS system pressure decreases. Control rods drift into the core as the control rod drive (CRD) scram outlet valves begin to slowly open. The outboard MSIVs close causing an automatic reactor scram. Operator actions based on CAS failure would be taken in accordance with plant procedures to scram the rector, control reactor pressure vessel (RPV) pressure/water level, and to mitigate the effects of individual air-operated valve failure modes.

9.3.1.3.2 Containment Instrument Air System

Since each of the two backup nitrogen cylinder banks and the cryogenic nitrogen supply are independent of each other, a single component failure in one will not affect the operational function of the other. The two ADS header tie line isolation valves are each powered from a different division of the critical power supply.

During normal operation, the cryogenic nitrogen supply will maintain pressure in the inboard MSIV, the power-assisted MSRV, and the ADS function accumulators. The cryogenic nitrogen supply piping and the CAS supply piping are not assumed to be serviceable under accident conditions. In such an event, the local accumulators at the MSIVs and MSRVs provide a short-term source of pressure for actuating these valves. Further discussion of the effects of loss of pressure to the MSIVs and the normal function MSRVs is presented in Sections 5.2.2.4, 5.4.5, and 7.3.1.1.10. The backup nitrogen cylinder bank subsystems will supply operating nitrogen pressure to the ADS MSRV accumulators at any time the normal supply does not function.

The solenoid valves on the ADS function MSRVs could be pressurized to a pressure greater than their qualified pressure under certain accident conditions if the ADS header pressure were allowed to approach the piping design pressure; therefore, the ASME relief valves are set at a lower pressure to preclude this possibility. They are located in the diesel generator building to provide access (post-LOCA) should one open and stick open.

9.3.1.4 Testing and Inspection Requirements

A channel functional test of the ADS accumulator backup compressed gas system alarm with a channel calibration verifies an alarm setpoint of greater than or equal to 135 psig (decreasing).

At a frequency no less than once per 22.5 months, the nitrogen capacity in at least two accumulator bottles per division within the backup compressed gas system is verified.

The backup compressed gas pressure instrumentation is periodically tested and calibrated as required by the Technical Specifications.

Instrument air sampling and testing is performed periodically to ensure that the air quality meets system design requirements. Routine maintenance and inspection along with operator observation during operation ensures the system is functioning properly to support normal plant operations.

9.3.1.5 Instrumentation Requirements

9.3.1.5.1 Control and Service Air Systems

Instrumentation and controls are provided in the main control room to control and monitor the operation of the systems. Low receiver air pressure, high air temperature, high filter differential pressure, and other system operating parameters (see Figure 9.3-1) are alarmed in the control room.

An air-operated control valve isolates the SA when its header pressure drops to 80 psig to enable sufficient air flow to the CAS. Nonlubricated control valves, a solid state timer, and a purge economizer regulate the air drying cycle.

9.3.1.5.2 Containment Instrument Air System

The instrumentation provided in the CIA system is shown in Figure 9.3-2. Pressure switches and alarms are provided in this system to regulate the nitrogen supply from the 15 nitrogen bottles in one bank and the 19 bottles in the second bank. Pressure switches in the tie lines between the CIA distribution header, which is itself supplied by either the CN system or the CAS system, and the ADS function lines monitor the supply pressure and cause tie line isolation valves to independently close if the tie line pressure should drop below the switch setpoint for a time period greater than 3 minutes. A pressure switch on each ADS function header then causes the nitrogen bottles to begin supplying their respective headers after the tie-line isolation valves actually close. A redundant pressure switch on each ADS function header set at a slightly lower pressure than the tie-line isolation setpoint, acts as a backup to either the isolation valve closed position switch, or the other pressure switch on the same ADS function header, to initiate supply from the nitrogen bottles. The redundant pressure switch also initiates an alarm in the control room to alert the operators to a low-pressure condition in the ADS function header.

In addition to the low pressure switches, each ADS function header has a pressure switch that provides control room annunciation to alert the operators to a high-pressure condition.

Local pressure indication is provided just downstream of each pressure control valve station should the station require isolation and the ADS function header pressure require regulation via the manual bypass valve.

9.3.2 PROCESS SAMPLING SYSTEM

9.3.2.1 Design Bases

The plant process sampling system is designed to provide representative samples, under controlled conditions, of plant process streams. Provisions for continuous monitoring of selected systems provide a means of analytical surveillance of system trends and performance during plant operations. Laboratory samples are taken to provide (a) comprehensive analytical information on plant operations, (b) a check on continuous monitoring instrumentation, and (c) regular reports on critical plant systems to ensure safe and proper operation.

The sample system is designed to the following criteria:

a. To ensure that the samples of the process stream are representative of the conditions that exist at the sample tap, the following design practices have been implemented:

1. The shortest practical line length and smallest practical line diameter is used to reduce time lag and sample line plate-out;

2. Sample lines are routed to prevent dead legs and are assembled to avoid traps and dips;

3. Certain sample lines have a continuous purge flow of sufficient velocity to inhibit deposition of suspended solids and to satisfy the requirements of analytical instrumentation;

4. To ensure representative sampling of gaseous effluents, special sampling probes are employed which consider the process line size, flow conditions, and flow direction. Where appropriate, isokinetic probes are used to ensure representative sampling of the particulates;

5. Where precision measurements are to be made of high purity (low conductivity) water, the process sample flow stream is conditioned by constant temperature baths before in-line conductivity measurement to maintain the internal temperature compensation within the valid range.

Hot process fluids are cooled by heat exchangers before entering grab sample hoods or analysis equipment to avoid measurement errors and the potential for injury; and

6. Sample line pressures are reduced at sample racks to protect in-line instruments and minimize the potential for personnel injury. Pressure regulators with relief valves are used to control and limit sample pressure.

7. Where tubing samples are taken from high temperature and pressure lines, flow will be isolated and the temperature allowed to decay to ambient before the system is depressurized, drained and then the sample removed.

b. In addition to limiting sample temperatures and pressures, the following safety precautions are taken:

1. The sample lines are made of stainless steel tubing with a minimum of joints or connections, and

2. Process sample lines containing highly radioactive fluids are routed to minimize personal radioactive exposure.

9.3.2.2 System Description

The sampling system consists of continuous flow in-line analytical instruments, plus numerous grab sample points which are either local or routed to a centralized sampling station. The sampling system is shown in Figures 9.3-3, 9.3-4, 9.3-5 and 9.3-17.

A sample station typically consists of a sample rack and a fume hood. Process fluids enter the conditioning rack and, where necessary, pass through one or more heat exchangers to reduce temperatures to 105°F or less. Pressure is reduced, where necessary, to limit sample pressure to 40 psig or less. If sampling criteria does not allow the temperature and pressure to be reduced at a sample rack, the flow will be isolated and the system brought to a safe temperature and pressure before sample removal to minimize the potential for injury to personnel. After conditioning, the process fluid is routed to the chemical fume hood where grab samples are taken. In the case of continuously monitored process streams, a portion of the fluid is diverted through a constant temperature bath, through conductivity cells and rotameters, and then to a drain line. Selected process fluids are continuously monitored by sample line sensors for conductivity and other parameters. Electric outputs of the sensors go to monitors and continuous recorders. Electrodes located in RWCU piping and inside of the RPV provide electro-chemical potential (ECP) signals to continuous recorders on PSR-CAB-1. Liquid effluents from the sample racks and chemical fume hoods are routed through closed drains to the liquid radwaste system.

The systems that require intermittent or continuous analytical sampling are arranged to permit sampling during normal and shutdown conditions. Many of the sample lines flow continuously. For those that do not, written procedures specify the flow rate and time required for sample line purge before taking the sample. This ensures that representative samples are obtained.

9.3.2.2.1 Sample Locations

The available process liquid sampling system points are described in Table 9.3-2 (not all available sample points are used). The sampling system for radiation monitoring equipment is described in Section 11.5.

9.3.2.2.2 Liquid Sample Taps and Probes

Sample line connections are, where possible, located after a straight run of pipe. Since process piping is designed for turbulent flow conditions, sample taps for nominal line sizes 3 in. and less can be taken from tees or welded-pipe connections. For nominal pipe sizes 4 in. and larger, sample probes are installed into the pipe line. Sample connections to process pipes are a minimum of 0.75 in. and have the root valves as close to process lines as possible. The root valve and connection are the same quality and code group as that of the process pipe.

The sample probes are fabricated in accordance with Figures 9.3-6, 9.3-7, and 9.3-8 and are designed to avoid failure through vibration or wear.

Sampling taps, where possible, are located at the sides of horizontal process lines rather than at the top or bottom.

9.3.2.2.3 Steam Samples

Two sample taps for main steam are installed, one of which is a spare.

The sample line is stainless steel tubing of sufficient total length (from sample point to sample rack) to allow for decay of ^{16}N to minimize radiation dose rate at the sample station. The steam sample is condensed near the process line tap and the resultant condensate is piped to the sample rack.

9.3.2.2.4 Sample Piping Design

The sample piping, from the root valve at the process tap to the sample conditioning rack in a sample room, is small diameter heavy wall stainless steel tubing to minimize corrosion or contamination of the sample. The small diameter also provides a passive flow restriction in the event of a sample line break.

Sample lines are sized to ensure turbulent flow conditions at the required flow rate. This turbulence alleviates stratification or plate-out of particles in the sample line.

Continuous flow lines containing fluids over 150°F are insulated to protect personnel. When warranted by high anticipated radiation levels, sample lines containing radioactive fluids are routed or shielded as described in Section 12.3.

9.3.2.2.5 Fume Hood Design and Grab Samples

All liquid sample lines entering the sample rooms have provisions for grab sampling. Each fume hood is an enclosed sheet metal structure (stainless steel) with manual grab sample valves positioned over a stainless steel sink, all located within the hood. The face of the hood has a transparent sash opening for hood access. Ambient air enters the opening to remove any gases or droplets released from the liquid sample. Air is exhausted from the top of the hood into the building ventilation exhaust system. The hood sink collects the sample liquids not collected in the grab sample and pipes the effluent to a closed drain system. A demineralized water faucet and a compressed air nozzle is located near the sink in the hood to flush and clean sampling apparatus.

9.3.2.3 Safety Evaluation

The process sampling system has no direct process control functions. Each continuously monitored sample line is provided with local indication and annunciation. This includes a high alarm, a low alarm where appropriate, and a continuous recorder. Remote indication is provided on certain samples.

Components of the process sampling system which form part of the reactor coolant pressure boundary (RCPB) or containment isolation system are designed in accordance with Seismic Category I requirements and other code and quality requirements as described in Section 3.2. Sample lines which form part of the containment isolation are provided with automatic fail-closed isolation valves both inside and outside of containment. The components of the process sampling system that do not form part of the RCPB or containment isolation system and are not in the reactor building are not designed to Seismic Category I requirements since they are not necessary to ensure any of the following:

a. The integrity of the RCPB,

b. The capability to shut down the reactor, and

c. The capability to prevent or mitigate the consequence of accidents which could result in potential offsite exposure in excess of the limits of 10 CFR 50.67.

The operation of the liquid sampling system is not necessary for plant safety. Therefore, in the unlikely event of an accident, all sample lines which pass through the containment are automatically isolated by fail-closed valves. Electrical power for the sampling subsystem is from a nonessential bus.

The routing of high temperature and high pressure sample lines outside the containment is not considered hazardous because of limited flow and limited stored energy as discussed in Section 3.6. The location of sample temperature and pressure reduction equipment outside the containment allows maintenance during plant operation.

The sample station is a closed system with grab samples taken under the safety of a chemical fume hood to minimize radiological hazard. The hood maintains a constant air velocity of approximately 100 ft/minute through the working face to ensure that airborne contamination will not enter the room.

Pressure control valves are installed in high-pressure sample lines so that operators will not be exposed to high sample pressure when obtaining grab samples.

At PSR-SR-49 sample rack, tubing samples are taken from high temperature and pressure lines that will utilize double isolation valves to protect the worker from harm due to the operating conditions of the high-energy line. This sample rack will be isolated then cooled to ambient temperature and then depressurized. The rack is then drained before the tubing sample is removed. This rack is located in the RWCU heat exchanger room, which minimizes exposure or contamination of personnel and maintains contamination control in case of a spill.

9.3.2.4 Tests and Inspections

The sample nozzles and associated piping, tubing, fittings, and valves are tested and inspected in accordance with the requirements of the main process pipes from which the samples are taken.

The process sampling system is proved operable by its use during normal plant operation. Grab sampling is provided for laboratory analysis for verification of proper operation and calibration of continuous analyzers.

9.3.2.5 Instrument Requirements

Continuous analyzers and associated recorders monitor conductivity and dissolved oxygen at selected points in the sampling system. Alarms annunciate in the main control room or the radwaste control room when the variables are out of specification to alert the control room operator that corrective action is required.

9.3.3 EQUIPMENT AND FLOOR DRAINAGE SYSTEMS

9.3.3.1 Design Bases

The equipment and floor drainage systems are designed to collect and convey the various operational waste liquids from their points of origin to their points of ultimate disposal under controlled conditions. The following design bases are used to ensure the system integrity during normal plant operation and preclude any danger to the health and safety of plant personnel, the environs, and the general public.

Drainage systems which carry radioactive waste are isolated from drainage systems which do not carry radioactive waste. Radioactive wastes are collected separately in tanks or sumps, based on their classification as floor drainage (low purity), equipment drainage (high purity), chemical drainage (nonneutral) and detergent drainage, to facilitate their treatment in the radwaste building.

Floor and equipment drains in the diesel generator building, service building, isolated areas of the turbine building, and storm water drainage are not intended to be operated as radioactive systems.

The majority of radioactive drainage piping 1-in. and above is of butt-welded construction to avoid the collection of radioactive solids, see Section 12.3.1.3.2. Drain lines are sloped to ensure complete drainage of piping. Appropriate shielding is used in locations which could result in increased radiation exposure. Cover plates are an integral part of all floor drains to prevent solids from entering drain piping and causing subsequent clogging.

9.3.3.2 System Description

Equipment and floor drainage systems are provided to handle radioactive and nonradioactive wastes in separate systems. Radioactive wastes are collected in the building sumps and transferred to the radwaste system (see Section 11.2) for treatment, sampling, and disposal or reuse within the plant. Roof drains are drained by gravity or pumped to the storm drain system.

9.3.3.2.1 Radioactive Equipment Drainage System

9.3.3.2.1.1 Reactor Building Drains. Reactor building equipment drains are collected in two separate subsystems (see Figure 9.3-9). One subsystem handles drainage from all equipment drains located in the primary containment. The other handles drainage from equipment drains located in remaining portions of the reactor building.

The primary containment equipment drain subsystem starts at funnel drains located at pieces of equipment, collects in branch lines, and discharges to the drywell equipment drain sump. The

drywell equipment drain sump is the collecting point for valve leakoffs, the inner refueling bellows seal support drains, reactor recirculation pump seal leakoffs, and equipment vents and drains within the drywell.

The drywell equipment drain sump is drained through a 3-in. line penetrating the containment wall to the reactor building equipment drain sump. This drain line includes two isolation valves located outside the drywell and a flow meter for monitoring of the leakage into the drywell sump during reactor operation. Leakage into the drywell equipment drain sump is considered identified leakage (see Section 5.2.5.2). This drain line is provided with a loop seal to prevent gas flow between the drywell and the reactor building during normal operation.

The containment isolation valves in the drywell sump drain line will close on a high pressure signal in the drywell to prevent blowing out the water seals. All equipment drainage piping in the drywell has been designed to Seismic Category 1M requirements. The drywell equipment sump drain line is Seismic Category I and is constructed to ASME Section III Class 2 requirements from the sump outlet to the second containment isolation valve.

The equipment drains for the remainder of the reactor building start at funnel drains located at pieces of equipment, collect in branch lines, and discharge to the reactor building equipment drain sump. The reactor building equipment drain sump collects drainage and leakage from the following major sources:

a. Fuel pool gate drainage,

b. Residual heat removal system equipment,

c. Fuel pool cooling system equipment,

d. CRD system equipment,

e. Reactor water cleanup system equipment,

f. High-pressure core spray (HPCS) system equipment,

g. Low-pressure core spray system equipment,

h. Reactor core isolation cooling system equipment,

i. Condensate filter demineralizer backwash pump and auxiliary condensate pumps, and

j. Drywell equipment drain sump.

Two sump pumps are installed in the reactor building equipment drain sump to transfer the collected water to the selected collector tank located in the radwaste building. Only one pump is in service at a time. A manual selector switch is located near the pumps to select the active pump.

A level switch in the sump starts and stops the active pump and timers monitor the fill and pump out rate and energize an alarm(s) in the control room if the settings on the fill and pump out timers are exceeded. A temperature sensor in the sump starts the active sump pump and directs the sump water through a heat exchanger to cool the water prior to being pumped to the radwaste system. All drainage piping in the reactor building has been designed to Seismic Category 1M requirements.

To minimize the release of radioactive contaminants, the reactor building equipment drain sump and drain headers are maintained at a negative pressure and vented through a filter system (see Section 9.4.2).

9.3.3.2.1.2 Turbine Building Drains. The turbine building equipment drain sumps serve as the collection point for equipment drains from all floors of the building (see Figure 9.3-10).

The equipment drains start at funnel drains located at pieces of equipment, collect in branch lines, and discharge to one of two turbine building equipment drain sumps. The turbine building equipment drain sumps collect drainage and leakage collection includes the following major sources:

a. Low-pressure feedwater heaters,
b. High-pressure feedwater heaters,
c. Gland steam evaporators,
d. Reactor feed pumps,
e. Instrument racks,
f. Steam jet air ejector condensers,
g. Mechanical vacuum pumps, and
h. Main condenser.

Two sump pumps are installed in each turbine building equipment drain sump since the pumps are not accessible during plant operation due to their location in a high radiation area. These pumps transfer the collected water to the waste collector tank located in the radwaste building. Level switches are provided in each sump to start and stop the sump pumps at predetermined levels. Drainage piping in this system is designed to Seismic Category II requirements.

9.3.3.2.1.3 Radwaste Building Drains. The radwaste building equipment drainage is collected in a separate equipment drain sump (see Figure 9.3-11). The subsystem collects drainage from components containing high purity water. The sump contains a sump pump which transfers the

water collected to the waste collector tank. The pump is controlled by a level switch in the sump.

To minimize the release of radioactive contaminants, the radwaste building equipment drain sump and drain header are maintained at a negative pressure and vented to the radwaste building ventilation system (see Section 9.4.3).

The radwaste building chemical waste sump collects wastes from equipment drains and floor drains associated with the chemical waste system (see Section 11.2.2) in a separate sump (see Figure 9.3-11). These wastes are collected and pumped to the chemical waste tank. The pump is controlled by a level switch located in the sump.

Drainage piping in these systems is designed to Seismic Category II requirements.

9.3.3.2.2 Radioactive Floor Drainage Subsystem

9.3.3.2.2.1 Reactor Building Floor Drains. Reactor building floor drainage is collected in two separate systems (see Figure 9.3-12). One handles drainage from the drywell which collects leakage from piping and equipment. The other handles drainage from all floor drains located in the remaining portions of the reactor building.

The drywell floor drains subsystem collects leakage in the drywell from piping, valves, and equipment in the drywell floor drain sump. In addition, drains from the drywell coolers are routed to this sump.

The floor drain sump system is a gravity flow feed from the drywell floor drain into one of the reactor building floor drain sumps. The floor drain sump geometry is such that the gravity feed is connected to a perforated standpipe in the center of the sump. Approximately 50 gal of liquid is required to fill a completely dry sump to the first row of holes in the perforated pipe outlet. A flow transmitter continuously measures flow from the drywell floor drain and supplies this flow information to a flow totalizer in the control room. Drywell floor drain flow is also provided to a recorder whose function is to actuate a control room alarm if flow exceeds a pre-established limit.

The drywell floor drain sump is drained through a 3-in. line penetrating the containment wall to one of the reactor building floor drain sumps. This drain line includes two isolation valves located outside the containment and an in-line flow meter for monitoring the flow from the drywell sump during reactor operation. Leakage into the drywell floor drain sump is considered unidentified leakage (see Section 5.2.5.2). The drain line is provided with a loop seal to prevent gas flow between the drywell and the reactor building during normal operation.

The containment isolation valves in the drywell sump drain line will close on a high-pressure signal in the drywell to prevent blowing out the water seal.

All floor drainage piping in the drywell has been designed to Seismic Category 1M requirements. The drywell floor drain sump piping is Seismic Category I and is constructed to ASME Section III Class 2 requirements from the sump out to the second containment isolation valve except 3 ft of 2-in. piping from the diaphragm floor seal, which does not require hydrotest or code stamp.

The floor drain system for the remainder of the reactor building contains four independent sumps. Each sump is located near one of the four corners of the building and collects drainage from roughly one quarter of the building.

The four sumps collect water from the following typical sources:

a. Floor drains throughout the building;

b. Drains from electrical trenches, refueling services boxes, valve boxes, cable reel pit and track drains on the refueling floor, pool liner drains, and the new fuel storage vault; and

c. Equipment drains from equipment containing low-purity water, such as reactor building closed cooling water system and standby gas treatment system.

As shown in Figure 9.3-12, the floor drain piping in the reactor building drains to one of four sumps listed below.

Floor Drain Sump	Room Locations	Rooms Served
FDR-SUMP-R1	RHR A pump room	RCIC RHR A
FDR-SUMP-R2	RHR B pump room	RHR B
FDR-SUMP-R3	HPCS pump room	HPCS CRD
FDR-SUMP-R4	RHR C pump room	LPCS RHR C

Each sump is equipped with level instrumentation which (a) controls the sump pumps, (b) alarms in the control room (on high sump level), and (c) initiates closure of the isolation valves in the piping between interconnected rooms. Class 1E level instrumentation is installed

just above floor level in each emergency core cooling system (ECCS) pump room. This instrumentation alarms in the control room.

The floor drain system is analyzed against potential sources of flooding as described in Section 3.6.

The effects of passive failures in the ECCS during post-LOCA long term cooling is addressed in Section 6.3.

Two of the reactor building floor drain sumps are provided with one sump pump (FD-SUMP-R4 and FD-SUMP-R2). The other two sumps have two pumps, one of which is for backup. The two sumps (FD-SUMP-R3 and FD-SUMP-R1) which have a backup pump, serve rooms containing the reactor core isolation system, residual heat removal system loop A pumps, and the CRD pump, condensate supply pumps, and the HPCS pump.

Floor drain sump FDR-SUMP-R3 also receives the leakage from the drywell floor drain sump. Each FDR sump draining more than one pump room has an isolation valve installed in the drain header between the connected pump rooms. The valve will close on high water level signal from the sump. Thus, except for the sump valve, room doors and piping/cable penetrations, drainage in any pump room, exceeding the capacity of the sump pump, will be confined to that room with the exception of RCIC and CRD pump rooms which are connected by an unisolable sump pipe.

The reactor building floor drain pumps transfer the collected water to the floor drain collector tank located in the radwaste building. Level switches are provided in each sump to start and stop the sump pumps at predetermined levels. A timing switch in each sump monitors the fill-up rate in the sump. Abnormal sump fill-up rate is alarmed in the main control room.

In addition, wall-mounted level sensing instrumentation is provided in each ECCS pump room to detect passive failures in the ECCS during post-LOCA long-term cooling and to alarm in the control room. As discussed in Section 6.3.2.5, ample operator time is available after detection of the leak to identify and isolate the source before the leak has any adverse effect on the ECCS.

To minimize the release of radioactive contaminants the reactor building floor drain sumps and drain headers are maintained at a negative pressure and vented through a filter system (see Section 9.4.2).

9.3.3.2.2.2 Turbine Building Floor Drains. Turbine building radioactive floor drains are collected in two sumps located in the turbine building (see Figure 9.3-10). Each sump is equipped with two sump pumps. Floor drain water collected in these sumps is pumped to the floor drain collector tank in the radwaste building for processing.

Level switches are provided in each sump to start and stop the sump pumps at predetermined levels. A mechanical alternator installed in each sump alternates the operation of each pump.

Drainage piping in this system is designed to Seismic Category II requirements.

9.3.3.2.2.3 Radwaste Building Floor Drains. Three sumps collect radioactive floor drains and equipment drains and overflows from equipment containing water of low purity (see Figure 9.3-11). Two of these sumps pump to the floor drain collector tank. The remaining sump, which collects drainage from the solid waste handling area, discharges to the waste sludge phase separator.

Level switches are provided in each sump to start and stop the pump at predetermined levels.

Drainage piping in this system is designed to Seismic Category II requirements and supported to Seismic Category I requirements.

9.3.3.2.3 Nonradioactive Water Drainage System

9.3.3.2.3.1 Turbine and Service Buildings. Equipment and floor drains from normally uncontaminated areas of the turbine building are collected in three sumps (see Figure 9.3-13). All these sumps are routed to the radwaste system for processing (see Section 11.2).

Level switches are provided in each sump to start and stop the pumps at predetermined levels.

Area floor drains and equipment drains collected by this system are as follows:

a. Operating floor (el. 501 ft 0 in.)

Air handling units (equipment drains)
Air handling wash pumps (equipment drains)
Instrument panels (equipment drains)
Air washers (equipment drains)
Clean area drains

b. Mezzanine floor (el. 471 ft.0 in.)

Clean area drains
Turbine oil coolers (cooling water drains)
HP fluid reservoir (cooling water drains)

c. Ground floor (el. 441 ft 0 in.)

Clean area drains
H_2 seal oil unit (cooling water drains)
Stator cooling water unit (equipment drain)
Main condenser water box (equipment drain)
Elevator pit drain
Auxiliary boiler blowdown tank (equipment drain)
Auxiliary condensate tank (equipment drain)
Service and instrument air compressors (equipment drain)

Equipment and floor drains in the service building are collected in a single sump containing two sump pumps. Water collected in the service building floor drain sump is pumped to the storm water drainage system.

Equipment and floor drains in the diesel generator building are routed to the storm water drainage system. Building roof drains are collected in branch lines which empty into a header prior to discharge to the storm water system.

Water collected by the storm water drainage system is conveyed by a concrete pipe to a point approximately 1500 ft northeast of the plant. The pipe discharges to lined evaporation ponds. Grab samples of the discharge are analyzed as part of the radiological environmental monitoring program (REMP). A composite water sampler was installed in late 1992.

9.3.3.2.3.2 Miscellaneous Drainage System. Liquid waste from curbed oil equipment areas are directed to separate oil sumps for collection and disposal. These areas are as follows:

a. Turbine lube oil storage and conditioning area, and
b. H_2 seal oil room.

Curbs are provided around fuel oil tanks, auxiliary boiler, and other equipment to contain spillage and prevent oil from entering drainage systems.

9.3.3.3 Safety Evaluation

Each of the sumps in the reactor, radwaste, turbine generator, and service buildings are provided with high-high level alarm signals. The sump pump starts operating on actuation of the high water level switch and shuts down on actuation of the low level switch. On sumps containing two pumps the standby pump is started when a high-high water level switch is actuated and an alarm is actuated. Both pumps shut down on actuation of the low level switch.

Sumps in the reactor building are provided with timers which initiate an alarm when the fill-up rate of a sump exceeds a preset value. These sumps serve as leakage monitors for the CRD

seals, the drywell equipment, the RCIC system, ECCS system, and other systems that support and protect the nuclear steam supply system.

Containment integrity is maintained in the transfer of liquid waste from the drywell sumps to the reactor building sump by a loop seal and isolation valves located outside the containment. These valves close on high containment pressure or low reactor vessel water level. In the reactor building, floor drain sumps that serve more than one ECCS equipment room isolate the rooms from one another on a high-high level sump signal that closes sump influent isolation valves.

In addition, if failure of the normal sump level detection and isolation system in the ECCS pump rooms should occur, a Class 1E leak detection system is installed (see Section 6.3).

9.3.3.4 Testing and Inspection Requirements

The equipment and floor drainage systems are in daily use and as such do not require periodic testing to ensure operability. Testing and calibration of the leak detection system components are discussed in Section 5.2.5.

9.3.3.5 Instrumentation Requirements

Sump pumps are equipped with run lights and elapsed time meters located on the radwaste control panel. High-high level alarms for the turbine and radwaste building sumps are also annunciated in the radwaste control room. Reactor building equipment drain sump temperature and reactor building sump level are monitored in the main control room.

9.3.4 CHEMICAL AND VOLUME CONTROL SYSTEM

Not applicable to BWRs.

9.3.5 STANDBY LIQUID CONTROL SYSTEM

9.3.5.1 Design Bases

The standby liquid control (SLC) system meets the following design bases:

a. Backup capability for reactivity control is provided, independent of normal reactivity control provisions in the nuclear reactor, to shut down the reactor if the normal control ever becomes inoperable. The SLC system equipment essential for injection of neutron absorber solution into the reactor is designed to Seismic Category I requirements (see Section 3.7). The system piping and

equipment are designed in accordance with the requirements stated in Sections 3.2 and 3.9;

b. The system has the capacity for controlling the reactivity difference between the steady-state operating condition of the reactor with voids and the cold shutdown condition, including shutdown margin, to ensure complete shutdown from the most reactive condition at any time in core life;

c. The system has the capability to inject sodium pentaborate solution into the RPV in response to a LOCA to control the pH in the suppression pool. Re-evolution of iodine from the suppression pool water can be minimized by maintaining the suppression pool pH level greater than 7.0.

d. The system meets the requirements of 10 CFR 50.62 for response to anticipated transients without scram (ATWS). System modifications have been done in conformance with the criteria presented in the BWR Owner's Group ATWS Licensing Topical Report, NEDE-31096-P, and in Generic Letter 85-06;

e. The time required for actuation and effectiveness of the SLC system is consistent with the nuclear reactivity rate of change predicted between rated operating and cold shutdown condition. This system is not safety related and is not designed to provide a fast scram of the reactor or operation of fast reactivity transients;

f. The functional performance capability of the SLC system components can be verified periodically under test conditions consistent with system operating parameters. In addition, demineralized water, rather than the actual neutron absorber solution, can be injected during cold shutdown or refueling into the reactor to test the operation of all redundant components of the system;

g. The neutron absorber is dispersed within the reactor core in sufficient quantity to provide a reasonable margin for leakage or imperfect mixing; and

h. The possibility of unintentional or accidental shutdown of the reactor by this system is minimized.

9.3.5.2 System Description

The SLC system (see Figure 9.3-14) is manually initiated through two keylock switches from the main control room to pump a boron neutron absorber solution into the reactor if the operator determines the reactor cannot be shut down with the control rods or suppression pool pH control is required to mitigate the dose consequences of a LOCA. The key locked switches prevent inadvertent injection of neutron absorber by the SLC system.

The two key locked switches are provided to ensure positive action from the main control room should the need arise. Standard power plant procedural controls are applied to the operation of the key locked control room switches.

The boron solution tank, the test water tank, the two positive displacement pumps, the two explosive valves, the two motor-operated pump suction valves, and associated local valves and controls are located in the reactor building.

The solution is piped into the reactor vessel and discharged into the core via the HPCS spray header so it mixes with the cooling water (see Section 5.3). In the event of a LOCA, the mixed solution and cooling water flows to the suppression pool by flowing through the break and downcomers.

The SLC system can deliver enough sodium pentaborate solution into the reactor (see Figure 9.3-15) to ensure reactor shutdown. As well, the SLC system can inject sufficient sodium pentaborate solution to ensure the pH in the suppression pool is maintained greater than 7.0 following a LOCA. The sodium pentaborate solution is prepared in the SLC tank. The sodium pentaborate enrichment is verified prior to addition to the SLC tank by isotopic analysis. The required sodium pentaborate concentration and solution volume in the SLC tank to ensure reactor shutdown capability is included in the Technical Specifications. An air sparger is provided in the tank for mixing. To prevent system plugging, the tank outlet is raised above the bottom of the tank. Samples for analyses are taken in accordance with approved procedures.

The saturation temperature of the solution is 67°F at the maximum concentration of 15.0% (see Figure 9.3-16). An automatic electrical resistance heater system provides heat to maintain the solution temperature greater than saturation conditions for sodium pentaborate to prevent precipitation during storage. The pump suction piping from the storage tank to the pump suction valves is also electrically heat traced. Administrative controls limit the solution temperature to less than 150°F during heatup and mixing using manual temperature control.

Liquid level in the storage tank is alarmed at either high level or low level.

The positive displacement pumps are sized to inject the solution into the reactor in approximately 1 hr with both pumps operating. The system design pressure between the pump discharge and the explosive valves is 1400 psig, at which pressure the two relief valves are set. To prevent bypass flow from one pump in case of relief valve failure in the line from the other pump, a check valve is installed downstream of each relief valve line in the pump discharge pipe.

The two explosive-actuated injection valves provide assurance of opening when needed and ensure that boron will not leak into the reactor even when the pumps are being tested. Each

explosive valve is closed by a plug in the inlet chamber. The plug is circumscribed with a deep groove so the end will readily shear off when pushed with the valve plunger. This opens the inlet hole through the plug. The sheared end is pushed out of the way in the chamber, and it is shaped so it will not block the ports after release.

The shearing plunger is actuated by an explosive charge with dual ignition primers inserted in the side chamber of the valve. The two ignition circuits of each explosive valve are monitored for continuity. If either circuit opens, a bypass and inoperable status indication (BISI) display occurs in the main control room.

The SLC system is actuated by two key locked switches on the main control room console. This ensures that switching from the "off" position is a deliberate act. Operating either switch starts one of the injection pumps, actuates both of the explosive valves, opens both pump suction motor-operated valves, and closes the RWCU system outboard isolation valve to prevent loss or dilution of the boron. (This is the sole purpose of this RWCU isolation. This isolation is not related to RWCU isolation to ensure containment integrity.)

A green light in the control room indicates that power is available to the pump motor contactor and that the contactor is deenergized (pump not running). A red light indicates that the contactor is closed to energize.

Storage tank liquid level, tank outlet valve position, pump discharge pressure, flow indication, and loss of continuity on the explosive valves indicate that the system is functioning. Cross piping and check valves ensure a flow path through either pump and either explosive valve. Pump discharge pressure and system flow is indicated in the control room.

Equipment drains and tank overflow are not piped to the radwaste system but to separate containers (such as 55-gal drums) that can be removed and disposed of to prevent any trace of boron from inadvertently reaching the reactor.

Instrumentation consisting of solution temperature indication and control, solution level, and heater system status is provided locally at the storage tank. The SLC system is seismically qualified from the storage tank (including the tank) to the injection point to the HPCS piping. Seismic category and quality class are included in Table 3.2-1. Principles of system testing are discussed in Section 9.3.5.4.

9.3.5.3 Safety Evaluation

The SLC system is a reactivity control system and is maintained in an operable status whenever the reactor is critical. The SLC system may also be used to maintain suppression pool pH above 7.0 following a LOCA and is maintained operable when critical or in hot shutdown.

The system is designed to bring the reactor from rated power to a cold shutdown at any time in core life. The reactivity compensation provided will reduce reactor power from rated to zero level and allow cooling the nuclear system to below 200°F with the control rods remaining withdrawn in the rated power pattern. It includes the reactivity gains that result from complete decay of the rated power xenon inventory. It also includes the positive reactivity effects from eliminating steam voids, changing water density from hot to cold, reduced doppler effect in uranium, reducing neutron leakage from boiling to cold, and decreasing control rod worth as the moderator cools.

The minimum average concentration of natural boron in the reactor to provide adequate shutdown margin, after operation of the SLC system, is 780 ppm. Calculation of the minimum quantity of sodium pentaborate to be injected into the reactor is based on the required 780 ppm average concentration in the reactor coolant, including recirculation loops, at 70°F and reactor normal water level. The amount is increased by 25% to allow for imperfect mixing and leakage. An additional 275 ppm is provided to accommodate dilution by the RHR system in the shutdown cooling mode. This concentration is achieved when the solution is prepared as described in Section 9.3.5.2 and maintained above saturation temperature.

The saturation temperature of the maximum concentration solution is 67°F. To ensure complete solubility of the solution, a tank operating heater is provided which turns on when the temperature drops below approximately 80°F. The tank heater turns off when the temperature increases to approximately 90°F.

Cooldown of the nuclear system requires a minimum of several hours to remove the thermal energy stored in the reactor, cooling water, and associated equipment. Use of the main condenser and various shutdown cooling systems requires 10 to 24 hr to lower the reactor vessel to room temperature (70°F); this is the condition of maximum reactivity and, therefore, the condition that requires the maximum concentration of boron.

To mitigate the consequences of an ATWS, the SLC system is capable of injecting the equivalent in reactivity control of 86 gpm at 13.0% (by weight) of sodium pentaborate solution per the requirements of 10 CFR 50.62. Each SLC pump injects at not less than 41.2 gpm at 13.6% concentration which is mathematically equivalent to 86 gpm at 13.0%. At this injection rate with only one pump, the solution is injected into the reactor in approximately 2 hr which provides negative reactivity insertion considerably quicker than the reactivity increase caused by the cooldown. The SLC injection path via the HPCS spray ring provides sufficient mixing so that any power oscillations are precluded. This same amount and concentration of boron, at the flow rate of a single pump is adequate to maintain the suppression pool pH greater than 7.0, when used in a LOCA.

The SLC system has redundant electrical components requiring AC power to actuate for sodium pentaborate solution injection. These divisional components are powered by separate safety-related AC divisions that are backed by onsite emergency diesel generators.

The SLC system and pumps have sufficient pressure margin, up to the system relief valve setting of approximately 1400 psig, to ensure solution injection into the reactor above the normal pressure in the reactor. The nuclear system safety/relief valves begin to relieve pressure at approximately 1100 psig. Therefore, the SLC system positive displacement pumps cannot overpressurize the nuclear system.

The SLC system is evaluated against the applicable General Design Criteria as follows:

Criterion 2:

The SLC system is located in the area outside of the primary containment and below the refueling floor. In this location, it is protected by walls from external natural phenomena such as earthquakes, tornadoes, hurricanes, and floods and also from the effects of internal postulated accident events.

Criterion 4:

The SLC system is designed for the expected environment in the compartment in which it is located. In this compartment, it is not subject to the conditions postulated in this criterion such as missiles, whipping pipes, and discharging fluids. The SLC system components are qualified in accordance with the CGS Equipment Qualification Program to operate in a post-LOCA environment for a minimum of 24 hours.

Criterion 26:

The SLC system is a backup reactivity control system for the normal reactivity control systems.

Criterion 29:

Although GDC 29 is not a design basis, certain valves outboard of the isolation valves are redundant. Two suction valves and two injection valves are arranged and cross-tied such that operation of either one of a pair results in successful operation of the system. The SLC system also has test capability. A special test tank is supplied for providing test fluid for the injection test.

Pumping capability and suction valve operability may be tested at any time. A trickle current continuously monitors continuity of the firing mechanisms of the injection squib valves.

Regulatory Guide compliance is described in Section 1.8.

This system is used in the special plant capability demonstration events, "Reactor Shutdown and Cooldown - ATWS" and "Reactor Shutdown and Cooldown Without Control Rods." These events are extremely low probability non design basis postulated accidents. Various single failure analytical exercises can be examined to show additional capabilities to accommodate further plant system degradations. See GE Topical Report NEDO-20626, dated October 1974, Studies of BWR Design for Mitigation of ATWS.

9.3.5.4 Testing and Inspection Requirements

Operational testing of the SLC system is performed in accordance with applicable Technical Specifications. The SLC system injection train components and piping are included in the CGS Inservice Inspection (ISI) and Inservice Testing (IST) Programs. The reactor must be in mode 4 or 5 before changing from the SLC system standby mode to the injection test mode.

The concentration of the sodium pentaborate in the solution tank is determined periodically by chemical analysis using samples taken directly from the tank. The sodium pentaborate enrichment is verified prior to addition to the SLC tank by isotopic analysis.

Should the boron solution ever be injected into the reactor, either intentionally or inadvertently, the boron can be removed from the reactor coolant system by flushing, followed by operating the RWCU system. There is practically no effect on reactor operations when the boron concentration has been reduced below approximately 50 ppm.

The SLC system preoperational test is described in Section 14.2.

9.3.5.5 Instrumentation Requirements

The instrumentation and control system for the SLC system is designed to allow the injection of neutron absorber solution into the reactor and to maintain the neutron absorber solution well above the saturation temperature. A further discussion of the SLC system instrumentation is provided in Section 7.4.1.2.

9.3.6 REFERENCES

9.3-1 "Compressed Air Systems," Design Basis Document, Section 305.

Table 9.3-1

Equipment Characteristics

Control air system	
a. Air compressors	
1. Quantity	3
2. Rated output (each)	387 ± 4% scfm
3. Rated discharge pressure	115 psig (after filters)
b. Air receivers	
1. Quantity	3
2. Volume (each)	96 ft^3
c. Air desiccant dryers	
1. Quantity	2
2. Type	Heatless regenerative
3. Desiccant	Activated alumina
4. Rated inlet drying capacity (each skid)	750 scfm
5. Dewpoint at outlet	-40°F
6. Cycle of operation	4 or 10 minutes
d. Air dryer (refrigerated)	
1. Quantity	2
2. Type	Freon R-22
3. Maximum capacity	830 scfm (each)
4. Dewpoint	39°F ± 4°F
5. Operation	Continuous
Service air system	
a. Air compressor	
1. Quantity	1
2. Rated output	630 scfm at 100 psig
3. Pressure modulating range	100 psig to 110 psig

Table 9.3-1

Equipment Characteristics (Continued)

b. Air Receiver	
1. Quantity (main header)	1
2. Volume	140 ft^3
c. Service air dryer	
1. Quantity	1
2. Type	Refrigerated (Freon R-22)
3. Maximum capacity	650 scfm
4. Dewpoint at outlet	+40°F
5. Operation	Continuous
Containment instrument air system	
a. Air receiver	
1. Quantity	1
2. Volume	34 ft^3
b. Air dryer	
1. Quantity	1
2. Type	Twin tower, heat regenerative
3. Media: active buffer	Silica gel Activated alumina absorbent
4. Peak inlet drying capacity	84 scfm (minimum)
5. Dewpoint at outlet	-40°F
6. Cycle of operation	"As needed" basis (moisture sensor)

Table 9.3-2

Available Sample Locations

Sample Point[a]	Description[b]	Sampling Location[c]	Activity[d]	Analysis[e]
SP-1	Reactor water, recirculating inlet manifold	SR-9 (SR-48)	H	Conductivity (dissolved oxygen dissolved hydrogen)
SP-2A,B	Main steam	SR-1	H	Grab sample
SP-3	Feedwater, after heaters HP-6A,B	SR-1	L	Conductivity, dissolved oxygen, corrosion product
SP-4	Condensate, after condensate pumps 1A,B,C	SR-1	L	Grab sample
SP-5	Condensate after gland seal steam condenser	Local	L	Grab sample
SP-6	Condensate after ejector condensers	Local	L	Grab sample
SP-8	Influent to cleanup filter demineralizers A,B	SR-9 (SR-48)	H	Conductivity (dissolved oxygen dissolved hydrogen)
SP-9A,B,C	Condensate after low pressure heater 1A,B,C	Local	L	Grab sample
SP-10	Waste collection filter EDR-DM-9 outlet	SR-8	L	Grab sample
SP-11	Condensate after condensate pumps 1A,B,C	SR-1	L	Conductivity
SP-12A,B,C	Condensate after low pressure heaters 4A,B,C	SR-1	L	Grab sample
SP-13A	Condensate after low pressure heater 5A	SR-1	L	Grab sample

Table 9.3-2

Available Sample Locations (Continued)

Sample Point[a]	Description[b]	Sampling Location[c]	Activity[d]	Analysis[e]
SP-13B	Condensate after low pressure heater 5B	SR-1	L	Grab sample
SP-14A	Condensate after filter demineralizer 1A	SR-9	L	Conductivity
SP-14B	Condensate after filter demineralizer 1B	SR-9	L	Conductivity
SP-14C	Condensate after filter demineralizer 1C	SR-9	L	Conductivity
SP-14D	Condensate after filter demineralizer 1D	SR-9	L	Conductivity
SP-14E	Condensate after filter demineralizer 1E	SR-9	L	Conductivity
SP-14F	Condensate after filter demineralizer 1F	SR-9	L	Conductivity
SP-15	Combined condensate after filter demineralizers	SR-9	L	Conductivity, dissolved oxygen
SP-17A	Condenser hotwell	SR-1		Spared in place
SP-19A	RCIC pump P-1 discharge	SR-6		Spared in place
SP-19B	RCIC water to containment	SR-6		Spared in place
SP-20	HPCS pump P-1 discharge	SR-6		Spared in place
SP-21	LPCS pump P-1 discharge	SR-6		Spared in place
SP-22A	After RHR heat exchanger A	SR-6	H	Grab sample

Table 9.3-2

Available Sample Locations (Continued)

Sample Point[a]	Description[b]	Sampling Location[c]	Activity[d]	Analysis[e]
SP-22B	After RHR heat exchanger B	SR-6	H	Grab sample
SP-23	After RCC heat exchangers 1A,B,C	Local	L	Grab sample
SP-24	Inlet to fuel pool demineralizers	SR-9	L/H	Conductivity
SP-25A	Outlet from fuel pool demineralizer A	SR-9	L	Conductivity
SP-25B	Outlet from fuel pool demineralizer B	SR-9	L	Conductivity
SP-26	Drywell equipment cooling water return	SR-6		Spared in place
SP-27A	After cleanup filter A	SR-9	H	Conductivity
SP-27B	After cleanup filter B	SR-9	H	Conductivity
SP-28	Nonregenerative heat exchanger shell outlet	Local	L	Grab sample
SP-29	Waste collector pump EDR-P-11, discharge	SR-8	L	Conductivity
SP-30	Waste surge pump EDR-P-15, discharge	SR-8	L	Grab sample
SP-31	Floor drain collector pump FDR-P-16 discharge	SR-8	L	Conductivity
SP-32	Floor drain filter FDR-FU-10, discharge	SR-8	L	Grab sample
SP-33A	Waste demineralizer EDR-DM-29 inlet	SR-8	L	Conductivity

Table 9.3-2

Available Sample Locations (Continued)

Sample Point[a]	Description[b]	Sampling Location[c]	Activity[d]	Analysis[e]
SP-33B	Waste demineralizer EDR-DM-29 outlet	SR-9	L	Conductivity
SP-34A	Waste sample pump EDR-P-14A, discharge	SR-8	L	Grab sample
SP-34B	Waste sample pump EDR-P-14B, discharge	SR-8	L	Grab sample
SP-35A	Floor drain demineralizer FDR-DM-111, inlet	SR-8	L	Conductivity
SP-35B	Floor drain demineralizer FDR-DM-111, outlet	SR-9	L	Conductivity
SP-36	Floor drain sample pump FDR-P-21, discharge	SR-8	L	Grab sample
SP-37	Effluent from centrifuges PWR-FU-94A,B	Local	L	Grab sample
SP-38A	Chemical waste pump MWR-P-26A, discharge	SR-8	L	Grab sample
SP-38B	Chemical waste pumps MWR-P-26B, discharge	SR-8	L	Grab sample
SP-43	Detergent drain pumps MWR-P-20A,B discharge	Local	L	Grab sample
SP-44	Cleanup decant pump RWCU-P-27 discharge	SR-8	H	Grab sample
SP-46	Condensate decant pump CPR-P-24 discharge	SR-8	L	Grab sample

Table 9.3-2

Available Sample Locations (Continued)

Sample Point[a]	Description[b]	Sampling Location[c]	Activity[d]	Analysis[e]
SP-47	Condensate sludge discharge mixing pump CPR-P-25 discharge	Local	L	Grab sample
SP-48A	Auxiliary boiler feedwater	Local	N	Grab sample
SP-48B,C	Auxiliary boiler blowdown	Local	N	Grab sample
SP-59	Demineralized water system supply	SR-5	N	Grab sample
SP-61	Potable water supply	SR-5	N	Grab sample
SP-62	RCC heat exchangers 1A,B,C, service water outlet	Local	N	Grab sample
SP-63A	RHR heat exchanger 1A service water outlet	Local	N	Grab sample
SP-63B	RHR heat exchanger 1B service water outlet	Local	N	Grab sample
SP-65A	Condensate storage tank 1A	Local	N	Grab sample
SP-65B	Condensate storage tank 1B	Local	N	Grab sample
SP-67C	Polishing demineralizer MWR-DM-4D, outlet	SR-8	L	Conductivity
SP-69	Fuel pool demineralizer outlet	SR-9	L	Conductivity
SP-70A,B	Carbon filter FW-FU-2A,B inlet	Local	N	Grab sample

Table 9.3-2

Available Sample Locations (Continued)

Sample Point[a]	Description[b]	Sampling Location[c]	Activity[d]	Analysis[e]
SP-71	Condensate filter demineralizer, inlet header	SR-9	L	Conductivity
SP-115	COND-P-5 suction combined CSTs	Local	L	Grab sample
SP-1088	COND-P-4 suction combined CSTs	Local	L	Grab sample

[a] Sequential numbering of sample points.

[b] Indicates type of system being sampled, i.e., reactor water, main steam, condensate, etc., and general location of the process line tap.

[c] Sample is taken from either a local process line tap or in a sample station rack, i.e.,

TBSR	Turbine building sample rack, SR-1
RWSR	Radwaste building sample racks, SR-8, SR-9
RBSR	Reactor building sample rack, SR-6
SBSL	Service building sample laboratory, SR-5

[d] The sample is expected to have H (High), L (Low), or N (No) radioactivity.

[e] Type of continuous monitor and/or a grab sample.

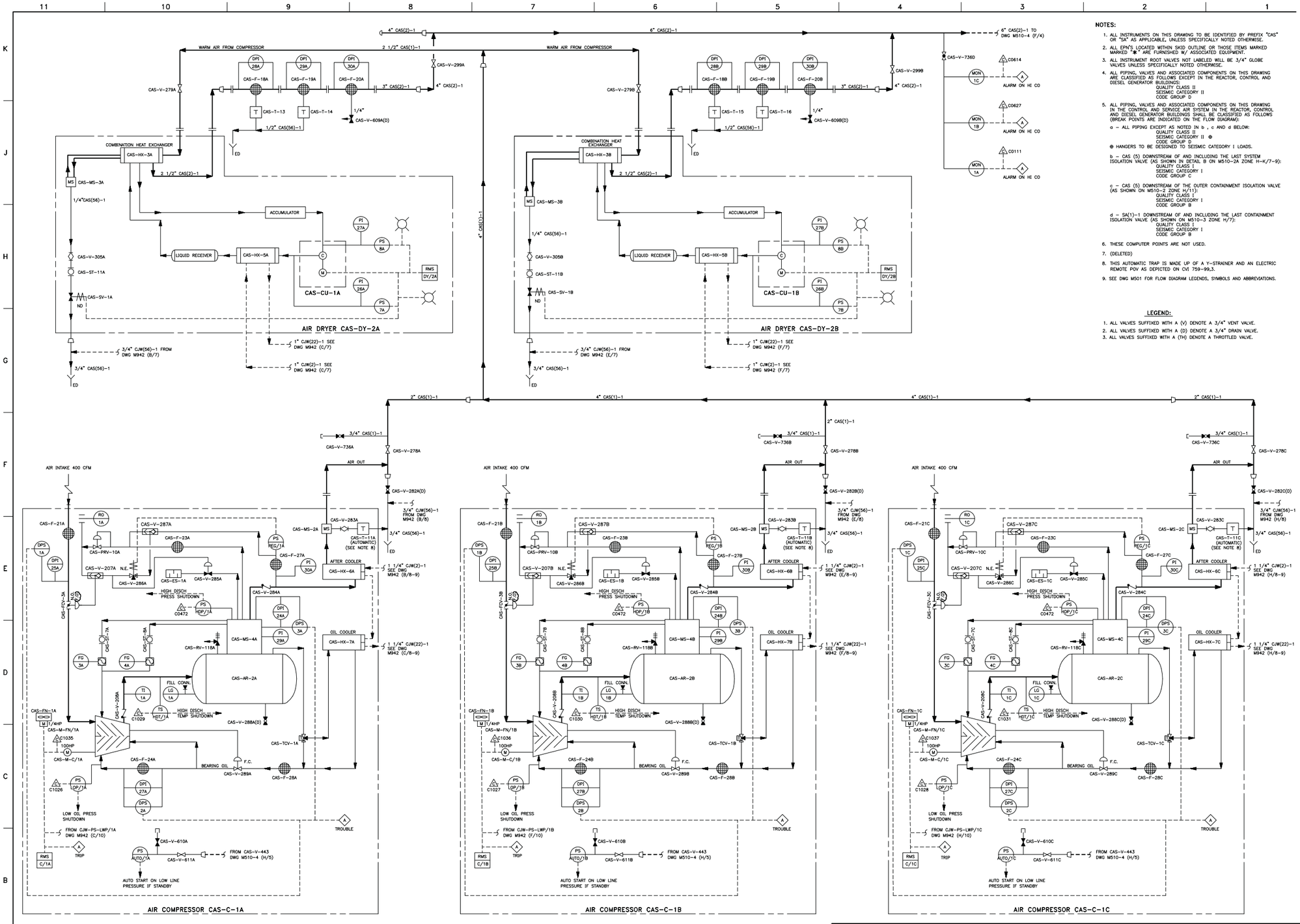

NOTES:

1. ALL INSTRUMENTS ON THIS DRAWING TO BE IDENTIFIED BY PREFIX "CAS" OR "SA" AS APPLICABLE, UNLESS SPECIFICALLY NOTED OTHERWISE.
2. ALL EPN'S LOCATED WITHIN SKID OUTLINE OR THOSE ITEMS MARKED MARKED "★" ARE FURNISHED W/ ASSOCIATED EQUIPMENT.
3. ALL INSTRUMENT ROOT VALVES NOT LABELED WILL BE 3/4" GLOBE VALVES UNLESS SPECIFICALLY NOTED OTHERWISE.
4. ALL PIPING, VALVES AND ASSOCIATED COMPONENTS ON THIS DRAWING ARE CLASSIFIED AS FOLLOWS EXCEPT IN THE REACTOR, CONTROL AND DIESEL GENERATOR BUILDINGS:
   QUALITY CLASS II
   SEISMIC CATEGORY II
   CODE GROUP D
5. ALL PIPING, VALVES AND ASSOCIATED COMPONENTS ON THIS DRAWING IN THE CONTROL AND SERVICE AIR SYSTEM IN THE REACTOR, CONTROL AND DIESEL GENERATOR BUILDINGS SHALL BE CLASSIFIED AS FOLLOWS (BREAK POINTS ARE INDICATED ON THE FLOW DIAGRAM):
   a – ALL PIPING EXCEPT AS NOTED IN b , c AND d BELOW:
   QUALITY CLASS II
   SEISMIC CATEGORY II ⊕
   CODE GROUP D
   ⊕ HANGERS TO BE DESIGNED TO SEISMIC CATEGORY I LOADS.
   b – CAS (5) DOWNSTREAM OF AND INCLUDING THE LAST SYSTEM ISOLATION VALVE (AS SHOWN IN DETAIL B ON M510–2A ZONE H–K/7–9):
   QUALITY CLASS I
   SEISMIC CATEGORY I
   CODE GROUP C
   c – CAS (5) DOWNSTREAM OF THE OUTER CONTAINMENT ISOLATION VALVE (AS SHOWN ON M510–2 ZONE H/11):
   QUALITY CLASS I
   SEISMIC CATEGORY I
   CODE GROUP B
   d – SA(1)–1 DOWNSTREAM OF AND INCLUDING THE LAST CONTAINMENT ISOLATION VALVE (AS SHOWN ON M510–3 ZONE H/7):
   QUALITY CLASS I
   SEISMIC CATEGORY I
   CODE GROUP B
6. THESE COMPUTER POINTS ARE NOT USED.
7. (DELETED)
8. THIS AUTOMATIC TRAP IS MADE UP OF A Y–STRAINER AND AN ELECTRIC REMOTE POV AS DEPICTED ON CVI 759–99.3.
9. SEE DWG M501 FOR FLOW DIAGRAM LEGENDS, SYMBOLS AND ABBREVIATIONS.

LEGEND:

1. ALL VALVES SUFFIXED WITH A (V) DENOTE A 3/4" VENT VALVE.
2. ALL VALVES SUFFIXED WITH A (D) DENOTE A 3/4" DRAIN VALVE.
3. ALL VALVES SUFFIXED WITH A (TH) DENOTE A THROTTLED VALVE.

Columbia Generating Station
Final Safety Analysis Report

Control and Service Air System

Draw. No. M510-1	Rev. 84	Figure 9.3-1.1

NOTES:

1. FOR NOTES AND LEGEND SEE DWG M510-1
2. VALVES CAS-V-98/23, CAS-V-98/24, CAS-V-98/25 & CAS-V-98/26 HAVE BEEN CLOSED, PIPING AND TUBING DOWNSTREAM IS DEACTIVATED AND SPARED IN PLACE.
3. VALVE CAS-V-100/58 HAS BEEN CLOSED, PIPING AND TUBING DOWNSTREAM IS DEACTIVATED AND SPARED IN PLACE.

Columbia Generating Station
Final Safety Analysis Report

Control and Service Air System

Draw. No. M510-2 | Rev. 44 | Figure 9.3-1.2

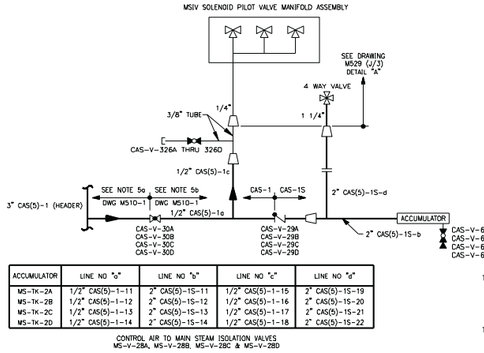

ACCUMULATOR	LINE NO "a"	LINE NO "b"	LINE NO "c"	LINE NO "d"
MS-TK-2A	1/2" CAS(5)-1-11	2" CAS(5)-1S-11	1/2" CAS(5)-1-15	2" CAS(5)-1S-19
MS-TK-2B	1/2" CAS(5)-1-12	2" CAS(5)-1S-12	1/2" CAS(5)-1-16	2" CAS(5)-1S-20
MS-TK-2C	1/2" CAS(5)-1-13	2" CAS(5)-1S-13	1/2" CAS(5)-1-17	2" CAS(5)-1S-21
MS-TK-2D	1/2" CAS(5)-1-14	2" CAS(5)-1S-14	1/2" CAS(5)-1-18	2" CAS(5)-1S-22

DETAIL "B"
M510-2 (H/10)

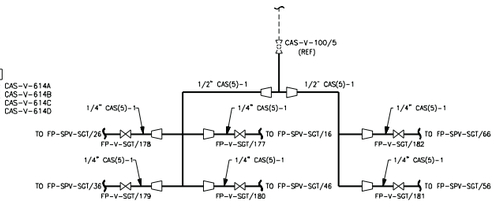

DETAIL "C"
M510-2 (K/10)

NOTES:

1. FOR GENERAL NOTES AND LEGEND SEE DRAWING M510-1.
2. CAS VALVES REFLECTED IN TABLES ARE ROOT VALVES FOR SPV'S REFERENCED. TUBING TAKE-OFFS FOR EACH SPV ARE LOCATED WITHIN 12" OF CAS VALVES. EACH TAKE-OFF HAS A 3/8" SHUT-OFF VALVE INSTALLED (TYPICALLY) NEAR THE SPV FOR SINGULAR ISOLATION OF THE SPV AIR SUPPLY.

(NOTE 2)

ISOLATION	SUPPLIES
CAS-V-100/81	EDR-SPV-44 EDR-SPV-49 EDR-SPV-51 EDR-SPV-52 EDR-SPV-53 EDR-SPV-54 EDR-SPV-57 EDR-SPV-58 EDR-SPV-59

TABLE "A"
M510-2 (D/6)

(NOTE 2)

ISOLATION	SUPPLIES
CAS-V-100/75	RWCU-SPV-206A RWCU-SPV-210A RWCU-SPV-214A RWCU-SPV-232A RWCU-SPV-234A RWCU-SPV-246A RWCU-SPV-247A

TABLE "F"
M510-2 (D/4)

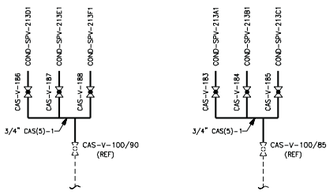

DETAIL "D"
M510-2 (D/7)

DETAIL "E"
M510-2 (D/7)

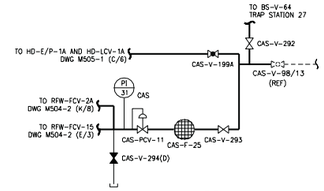

DETAIL "F"
M510-2 (B/12)

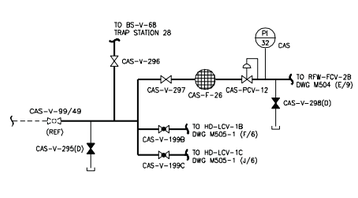

DETAIL "G"
M510-2 (B/12)

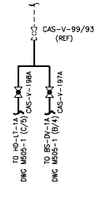

DETAIL "H"
M510-2 (D/13)

(NOTE 2)

ISOLATION	SUPPLIES
CAS-V-100/83	FDR-SPV-104 FDR-SPV-105 FDR-SPV-108 FDR-SPV-109 FDR-SPV-111 FDR-SPV-112 FDR-SPV-115 FDR-SPV-116 FDR-SPV-118

TABLE "B"
M510-2 (D/6)

(NOTE 2)

ISOLATION	SUPPLIES
CAS-V-100/77	CF-SPV-616 CF-SPV-619 CF-SPV-620 COND-PCV-264 (CVI 220-01,905,1, THRU 4)

TABLE "G"
M510-2 (D/4)

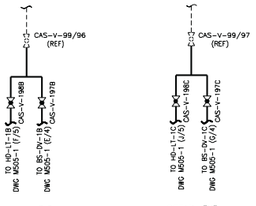

DETAIL "J"
M510-2 (D/13)

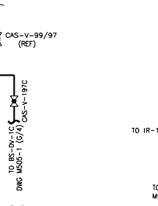

DETAIL "K"
M510-2 (D/13)

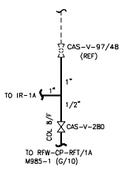

DETAIL "L"
M510-2 (B/13)

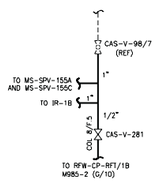

DETAIL "M"
M510-2 (B/12)

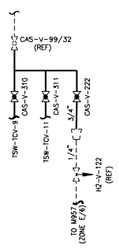

DETAIL "P"
M510-2 (D/14)

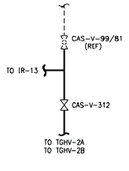

DETAIL "Q"
M510-2 (E/15)

(NOTE 2)

ISOLATION	SUPPLIES
CAS-V-100/79	RWCU-SPV-206B RWCU-SPV-210B RWCU-SPV-214B RWCU-SPV-232B RWCU-SPV-234B RWCU-SPV-246B RWCU-SPV-247B

TABLE "C"
M510-2 (D/5)

(NOTE 2)

ISOLATION	SUPPLIES
CAS-V-98/40	CF-SPV-47 CF-SPV-89 COND-SPV-221 (CVI 220-01,905,1 THRU 4) COND-SPV-218 (CVI 220-01,905,1 THRU 4) RWCU-SPV-223 SA-SPV-50

TABLE "H"
M510-2 (D/6)

(NOTE 2)

ISOLATION	SUPPLIES
CAS-V-100/78	RWCU-SPV-207B RWCU-SPV-211B RWCU-SPV-212B RWCU-SPV-213B RWCU-SPV-231B RWCU-SPV-238B

TABLE "D"
M510-2 (D/5)

(NOTE 2)

ISOLATION	SUPPLIES
CAS-V-100/76	RWCU-SPV-207A RWCU-SPV-211A RWCU-SPV-212A RWCU-SPV-213A RWCU-SPV-231A RWCU-SPV-238A

TABLE "E"
M510-2 (D/4)

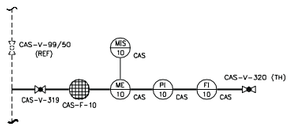

DETAIL "R"
M510-2 (B/11)

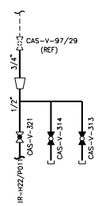

DETAIL "S"
M510-2 (K/6)



DETAIL "T"
M510-2 (K/9)

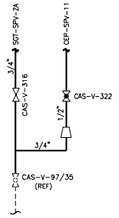

DETAIL "U"
M510-2 (K/10)

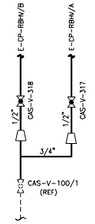

DETAIL "V"
M510-2 (K/8)

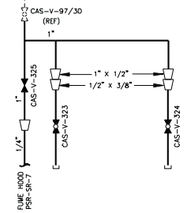

DETAIL "W"
M510-2 (K/7)

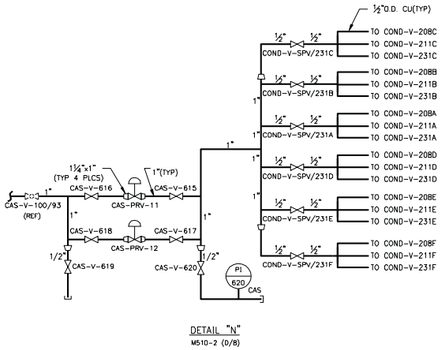

DETAIL "N"
M510-2 (D/8)

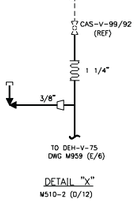

DETAIL "X"
M510-2 (D/12)

ISOLATION	SUPPLIES
CAS-V-98/48	FPC-SPV-8A FPC-SPV-8B MWR-SPV-509A MWR-SPV-509B MWR-SPV-525A MWR-SPV-525B MWR-SPV-576A MWR-SPV-576B MWR-SPV-620A MWR-SPV-620B RWCU-SPV-443 → DEACTIVATED

TABLE "J"
M510-2 (D/4)

Columbia Generating Station
Final Safety Analysis Report

Control and Service Air System

Draw. No. M510-2A | Rev. 16 | Figure 9.3-1.3

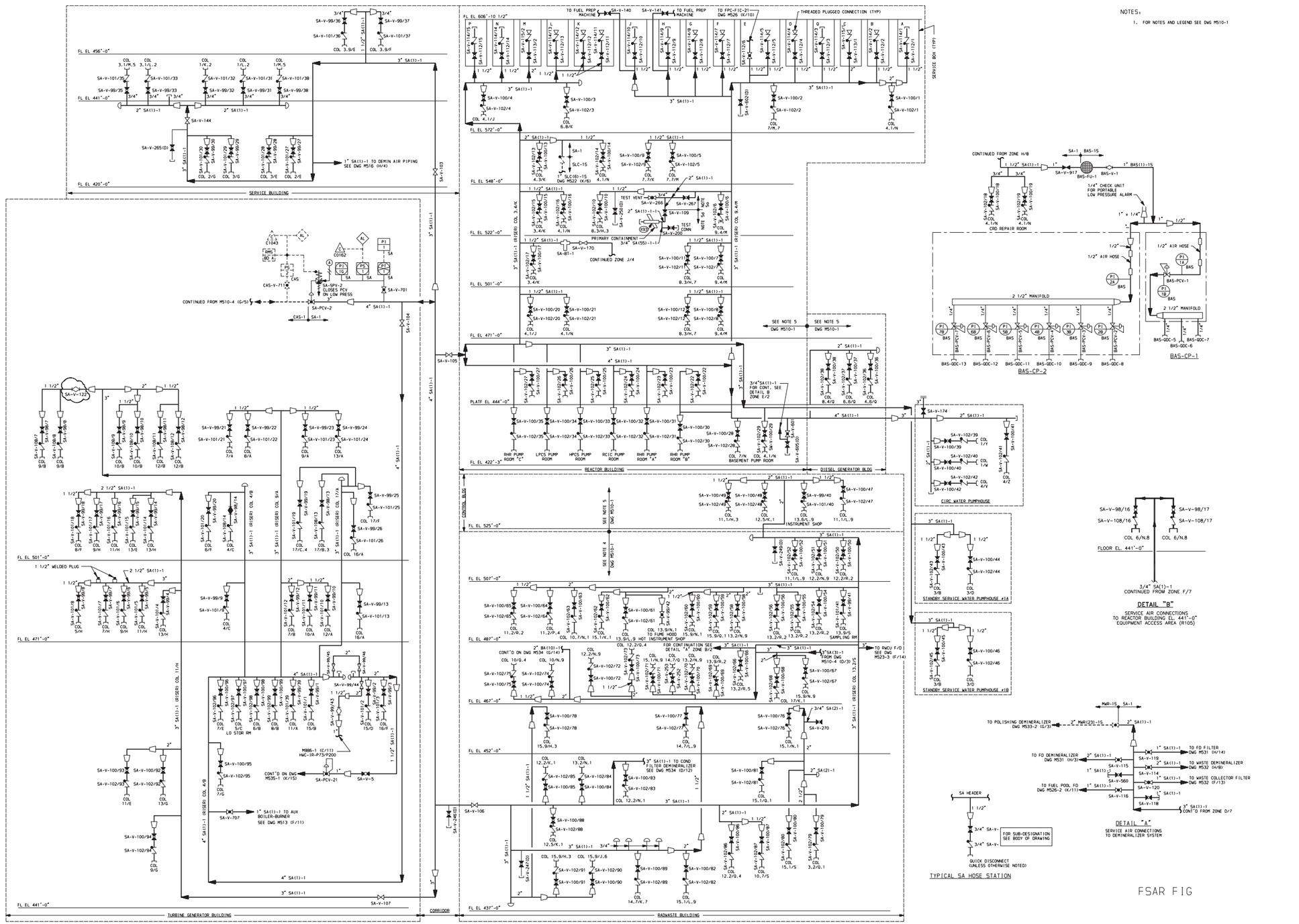

Columbia Generating Station
Final Safety Analysis Report

Control and Service Air System

Draw. No. M510-3	Rev. 27	Figure 9.3-1.4

Form No. 960690ai

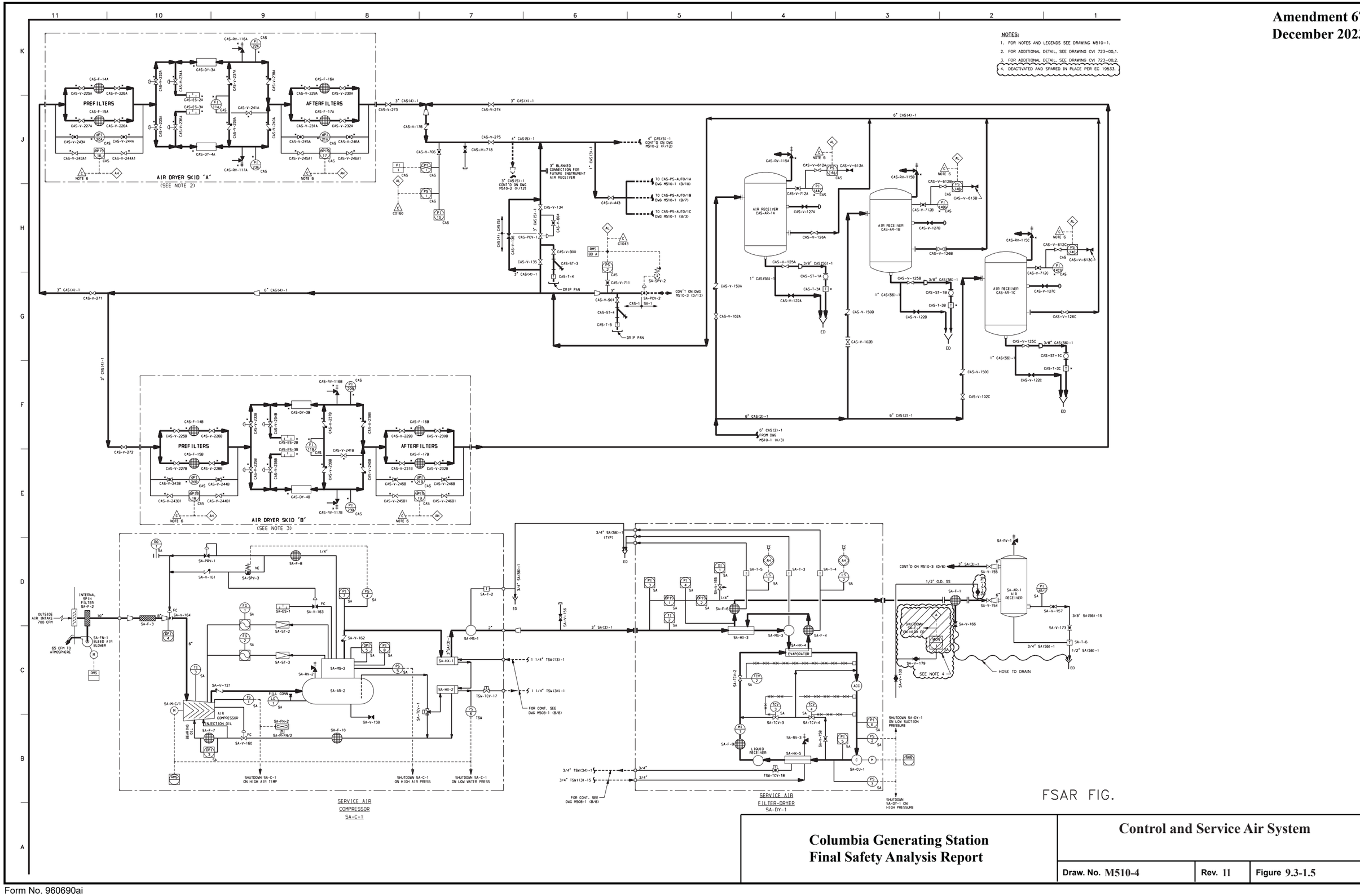

FSAR FIG.

Columbia Generating Station **Final Safety Analysis Report**	**Control and Service Air System**		
	Draw. No. **M510-4**	Rev. **11**	Figure **9.3-1.5**

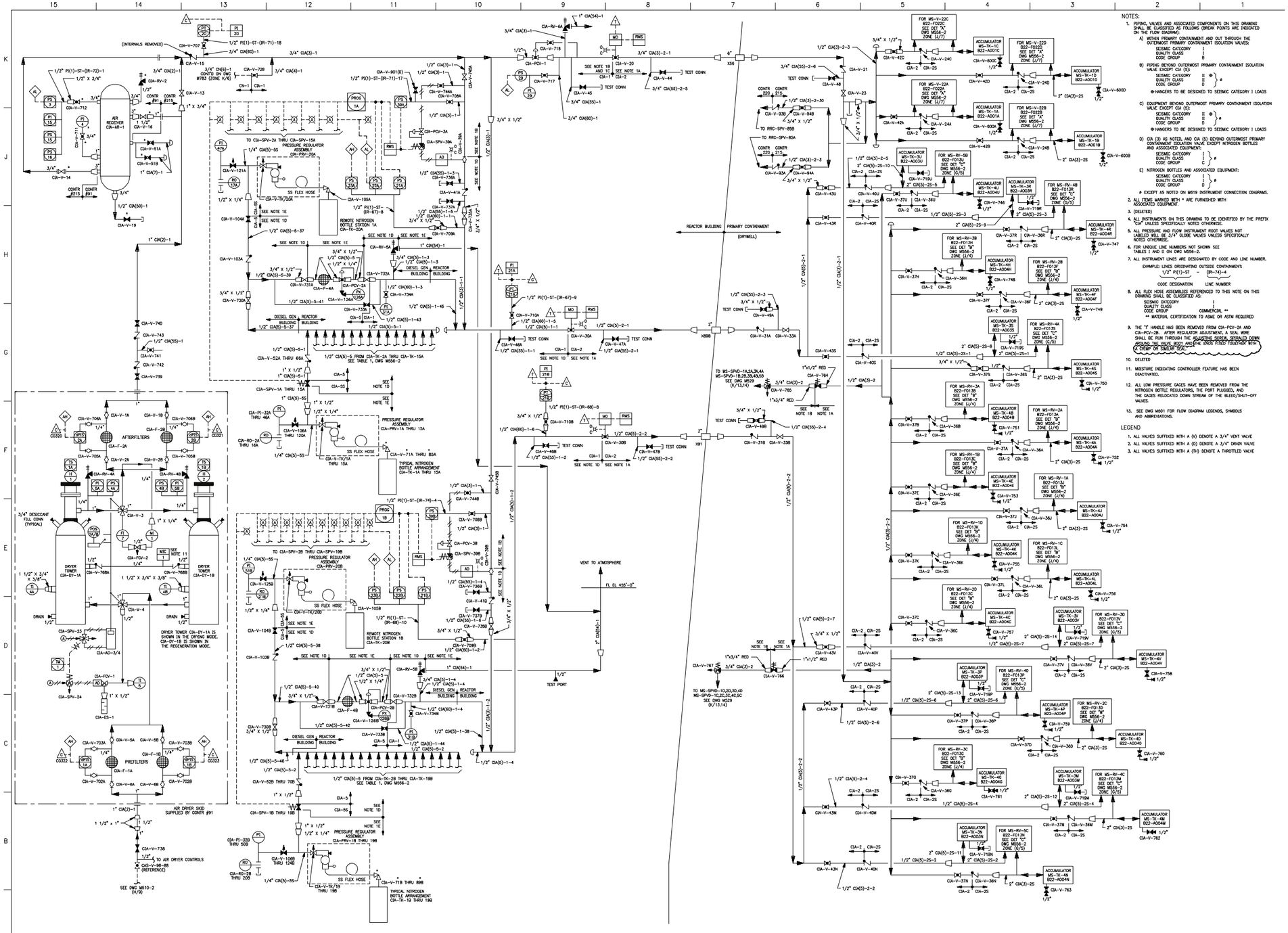
NOTES:
1. PIPING, VALVES AND ASSOCIATED COMPONENTS ON THIS DRAWING SHALL BE CLASSIFIED AS FOLLOWS (BREAK POINTS ARE INDICATED ON THE FLOW DIAGRAM):
A) WITHIN PRIMARY CONTAINMENT AND OUT THROUGH THE OUTERMOST PRIMARY CONTAINMENT ISOLATION VALVES:
SEISMIC CATEGORY I
QUALITY CLASS I
CODE GROUP B
B) PIPING BEYOND OUTERMOST PRIMARY CONTAINMENT ISOLATION VALVE EXCEPT CIA (5):
SEISMIC CATEGORY II
QUALITY CLASS II
CODE GROUP D
* HANGERS TO BE DESIGNED TO SEISMIC CATEGORY I LOADS
C) EQUIPMENT BEYOND OUTERMOST PRIMARY CONTAINMENT ISOLATION VALVE EXCEPT CIA (5):
SEISMIC CATEGORY II
QUALITY CLASS II
CODE GROUP D
* HANGERS TO BE DESIGNED TO SEISMIC CATEGORY I LOADS
D) CIA (3) AS NOTED, AND CIA (5) BEYOND OUTERMOST PRIMARY CONTAINMENT ISOLATION VALVE EXCEPT NITROGEN BOTTLES AND ASSOCIATED EQUIPMENT:
SEISMIC CATEGORY II
QUALITY CLASS II
CODE GROUP D
E) NITROGEN BOTTLES AND ASSOCIATED EQUIPMENT:
SEISMIC CATEGORY II
QUALITY CLASS II
CODE GROUP D
EXCEPT AS NOTED ON M619 INSTRUMENT CONNECTION DIAGRAMS.
2. ALL ITEMS MARKED WITH * ARE FURNISHED WITH ASSOCIATED EQUIPMENT.
3. (DELETED)
4. ALL INSTRUMENTS ON THIS DRAWING TO BE IDENTIFIED BY THE PREFIX "CIA" UNLESS SPECIFICALLY NOTED OTHERWISE.
5. ALL PRESSURE AND FLOW INSTRUMENT ROOT VALVES NOT LABELED WILL BE 3/4" GLOBE VALVES UNLESS SPECIFICALLY NOTED OTHERWISE.
6. FOR UNIQUE LINE NUMBERS NOT SHOWN SEE TABLES 1 AND 2 ON DWG M556-2.
7. ALL INSTRUMENT LINES ARE DESIGNATED BY CODE AND LINE NUMBER.
EXAMPLE: LINES ORIGINATING OUTSIDE CONTAINMENT:
1/2" P(1)-ST - (R-74)-4
CODE DESIGNATION LINE NUMBER
8. ALL FLEX HOSE ASSEMBLIES REFERENCED TO THIS NOTE ON THIS DRAWING SHALL BE CLASSIFIED AS:
SEISMIC CATEGORY I
QUALITY CLASS A
CODE GROUP COMMERCIAL **
** MATERIAL CERTIFICATION TO ASME OR ASTM REQUIRED
9. THE "I" HANDLE HAS BEEN REMOVED FROM CIA-PCV-2A AND CIA-PCV-2B. AFTER REGULATOR ADJUSTMENT, A SEAL WIRE SHALL BE RUN THROUGH THE ADJUSTING SCREW, SPROLLED DOWN AROUND THE VALVE BODY AND THE ENDS FIXED TOGETHER WITH A CRIMP OR SIMILAR SEAL.
10. DELETED
11. MOISTURE INDICATING CONTROLLER FEATURE HAS BEEN DEACTIVATED.
12. ALL LOW PRESSURE GAGES HAVE BEEN REMOVED FROM THE NITROGEN BOTTLE REGULATORS, THE PORT PLUGGED, AND THE GAGES RELOCATED DOWN STREAM OF THE BLEED/SHUT-OFF VALVES.
13. SEE DWG M501 FOR FLOW DIAGRAM LEGENDS, SYMBOLS AND ABBREVIATIONS.
LEGEND
1. ALL VALVES SUFFIXED WITH A (V) DENOTE A 3/4" VENT VALVE
2. ALL VALVES SUFFIXED WITH A (D) DENOTE A 3/4" DRAIN VALVE
3. ALL VALVES SUFFIXED WITH A (TH) DENOTE A THROTTLED VALVE
AIR RECEIVER CIA-AR-1
DRYER TOWER CIA-DY-1A
DRYER TOWER CIA-DY-1B
DRYER TOWER CIA-DY-1A IS SHOWN IN THE DRYING MODE. CIA-DY-1B IS SHOWN IN THE REGENERATION MODE.
AIR DRYER SKID SUPPLIED BY CONTR #91
SEE DWG M510-2 (V/9)
PREFILTERS
AFTERFILTERS
REMOTE NITROGEN BOTTLE STATION 1A CIA-TK-20A
REMOTE NITROGEN BOTTLE STATION 1B CIA-TK-20B
TYPICAL NITROGEN BOTTLE ARRANGEMENT CIA-TK-1A THRU 15A
TYPICAL NITROGEN BOTTLE ARRANGEMENT CIA-TK-1B THRU 19B
PRESSURE REGULATOR ASSEMBLY CIA-PRV-1A THRU 15A
PRESSURE REGULATOR ASSEMBLY CIA-PRV-1B THRU 19B
PRESSURE REGULATOR ASSEMBLY CIA-PRV-20A
PRESSURE REGULATOR ASSEMBLY CIA-PRV-20B
SS FLEX HOSE
DIESEL GEN BUILDING
REACTOR BUILDING
REACTOR BUILDING PRIMARY CONTAINMENT (DRYWELL)
VENT TO ATMOSPHERE
EL EL 455'-0"
TEST PORT
TO MS-SPVD-1A,2A,3A,4A MS-SPVD-1B,2B,3B,4B,5B SEE DWG M529 (V/13,14)
TO MS-SPVD-10,20,30,40 MS-SPVD-1C,2C,3C,4C,5C SEE DWG M529 (V/13,14)
TO CIA-SPV-2A THRU CIA-SPV-15A PRESSURE REGULATOR ASSEMBLY CIA-PRV-20A
TO CIA-SPV-2B THRU CIA-SPV-19B PRESSURE REGULATOR ASSEMBLY CIA-PRV-20B
TO RRC-SPV-85B
TO RRC-SPV-85A
CIA-TK-7A/15A
CIA-TK-7B/19B
CIA-TK-7A/1A THRU 15A
CIA-TK-7B/1B THRU

TABLE I

"A" SIGNAL TO BOTTLE (PNEUMATIC) STATION	LINE NUMBER
C11A-TK-2A	1/2" C11A13)-5-6
C11A-TK-2B	1/2" C11A13)-5-5
C11A-TK-3A	1/2" C11A13)-5-7
C11A-TK-3B	1/2" C11A13)-5-8
C11A-TK-4A	1/2" C11A13)-5-9
C11A-TK-4B	1/2" C11A13)-5-10
C11A-TK-5A	1/2" C11A13)-5-11
C11A-TK-5B	1/2" C11A13)-5-12
C11A-TK-6A	1/2" C11A13)-5-13
C11A-TK-6B	1/2" C11A13)-5-14
C11A-TK-7A	1/2" C11A13)-5-15
C11A-TK-7B	1/2" C11A13)-5-16
C11A-TK-8A	1/2" C11A13)-5-17
C11A-TK-8B	1/2" C11A13)-5-18
C11A-TK-9A	1/2" C11A13)-5-19
C11A-TK-9B	1/2" C11A13)-5-20
C11A-TK-10A	1/2" C11A13)-5-21
C11A-TK-10B	1/2" C11A13)-5-22
C11A-TK-11A	1/2" C11A13)-5-23
C11A-TK-11B	1/2" C11A13)-5-24
C11A-TK-12A	1/2" C11A13)-5-25
C11A-TK-12B	1/2" C11A13)-5-26
C11A-TK-13A	1/2" C11A13)-5-27
C11A-TK-13B	1/2" C11A13)-5-28
C11A-TK-14A	1/2" C11A13)-5-29
C11A-TK-14B	1/2" C11A13)-5-30
C11A-TK-15A	1/2" C11A13)-5-31
C11A-TK-15B	1/2" C11A13)-5-32
C11A-TK-16A	1/2" C11A13)-5-33
C11A-TK-16B	1/2" C11A13)-5-34
C11A-TK-17A	1/2" C11A13)-5-35
C11A-TK-17B	1/2" C11A13)-5-36

TABLE II

ACCUMULATOR IDENTIFICATION	LINE NUMBERS						
	A	B	C	D	E	F	G
MS-TK-4A	1/2" C11A13)-25-13	2" C11A13)-25-13	2" C11A13)-25-13	2" C11A13)-25-31	2" C11A13)-25-42	2" C11A13)-25-53	1/2" C11A13)-2-13
MS-TK-4B	1/2" C11A13)-25-14	2" C11A13)-25-14	2" C11A13)-25-14	2" C11A13)-25-32	2" C11A13)-25-43	2" C11A13)-25-54	1/2" C11A13)-2-14
MS-TK-4C	1/2" C11A13)-25-15	2" C11A13)-25-15	2" C11A13)-25-15	2" C11A13)-25-33	2" C11A13)-25-44	2" C11A13)-25-55	1/2" C11A13)-2-15
MS-TK-4D	1/2" C11A13)-25-16	2" C11A13)-25-16	2" C11A13)-25-16	2" C11A13)-25-34	2" C11A13)-25-45	2" C11A13)-25-56	1/2" C11A13)-2-16
MS-TK-4E	1/2" C11A13)-25-17	2" C11A13)-25-17	2" C11A13)-25-17	2" C11A13)-25-35	2" C11A13)-25-46	2" C11A13)-25-57	1/2" C11A13)-2-17
MS-TK-4F	1/2" C11A13)-25-18	2" C11A13)-25-18	2" C11A13)-25-18	2" C11A13)-25-36	2" C11A13)-25-47	2" C11A13)-25-58	1/2" C11A13)-2-18
MS-TK-4G	1/2" C11A13)-25-19	2" C11A13)-25-19	2" C11A13)-25-19	2" C11A13)-25-37	2" C11A13)-25-48	2" C11A13)-25-59	1/2" C11A13)-2-19
MS-TK-5A	1/2" C11A13)-25-20	2" C11A13)-25-20	2" C11A13)-25-20	2" C11A13)-25-38	2" C11A13)-25-49	2" C11A13)-25-60	1/2" C11A13)-2-20
MS-TK-4J	1/2" C11A13)-25-21	2" C11A13)-25-21	2" C11A13)-25-21	2" C11A13)-25-39	2" C11A13)-25-50	2" C11A13)-25-61	1/2" C11A13)-2-21
MS-TK-4K	1/2" C11A13)-25-22	2" C11A13)-25-22	2" C11A13)-25-22	2" C11A13)-25-40	2" C11A13)-25-51	2" C11A13)-25-62	1/2" C11A13)-2-22
MS-TK-4L	1/2" C11A13)-25-23	2" C11A13)-25-23	2" C11A13)-25-23	2" C11A13)-25-41	2" C11A13)-25-52	2" C11A13)-25-63	1/2" C11A13)-2-23
MS-TK-4M	1/2" C11A13)-25-24	2" C11A13)-25-24	2" C11A13)-25-24	2" C11A13)-25-4	2" C11A13)-25-15	2" C11A13)-25-64	1/2" C11A13)-2-24
MS-TK-4N	1/2" C11A13)-25-8	2" C11A13)-25-8	2" C11A13)-25-8	2" C11A13)-25-3	2" C11A13)-25-16	2" C11A13)-25-65	1/2" C11A13)-2-2
MS-TK-4P	1/2" C11A13)-25-25	2" C11A13)-25-25	2" C11A13)-25-25	2" C11A13)-25-5	2" C11A13)-25-17	2" C11A13)-25-66	1/2" C11A13)-2-25
MS-TK-4R	1/2" C11A13)-25-26	2" C11A13)-25-26	2" C11A13)-25-26	2" C11A13)-25-3	2" C11A13)-25-18	2" C11A13)-25-67	1/2" C11A13)-2-26
MS-TK-4S	1/2" C11A13)-25-27	2" C11A13)-25-27	2" C11A13)-25-27	2" C11A13)-25-1	2" C11A13)-25-19	2" C11A13)-25-68	1/2" C11A13)-2-27
MS-TK-4U	1/2" C11A13)-25-28	2" C11A13)-25-28	2" C11A13)-25-28	2" C11A13)-25-5	2" C11A13)-25-20	2" C11A13)-25-69	1/2" C11A13)-2-28
MS-TK-4V	1/2" C11A13)-25-29	2" C11A13)-25-29	2" C11A13)-25-29	2" C11A13)-25-7	2" C11A13)-25-21	2" C11A13)-25-70	1/2" C11A13)-2-29
MS-TK-1A	1/2" C11A13)-2-5	1/2" C11A13)-25-9	2" C11A13)-25-5	2" C11A13)-25-1	1/2" C11A13)-2-8		
MS-TK-1B	1/2" C11A13)-2-8	1/2" C11A13)-25-6	2" C11A13)-25-6	2" C11A13)-25-2	1/2" C11A13)-2-10		
MS-TK-1C	1/2" C11A13)-2-7	1/2" C11A13)-25-7	2" C11A13)-25-7	2" C11A13)-25-3	1/2" C11A13)-2-11		
MS-TK-1D	1/2" C11A13)-2-9	1/2" C11A13)-25-8	2" C11A13)-25-8	2" C11A13)-25-4	1/2" C11A13)-2-12		

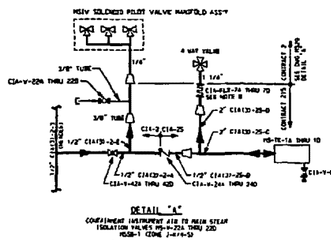

DETAIL "A"
CONTAINMENT INSTRUMENT AIR TO MAIN STEAM ISOLATION VALVES MS-V-22A THRU 22D
M556-1 (ZONE J-4/F-5)

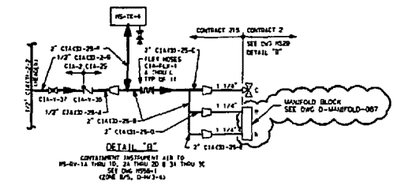

DETAIL "B"
CONTAINMENT INSTRUMENT AIR TO MS-RV-1A THRU 1D, 2A THRU 2D & 3A THRU 3C
SEE DWG M556-1
(ZONE B/G, D-M/J-4)

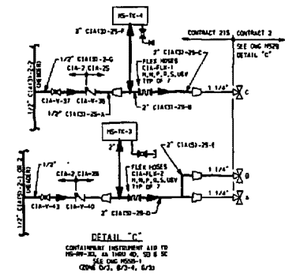

DETAIL "C"
CONTAINMENT INSTRUMENT AIR TO MS-RV-3A, 3A THRU 4D, 3B & 3C
SEE DWG M556-1
(ZONE D-3, B/3-4, G/3)

NOTE:
1. FOR GENERAL NOTES AND LEGEND SEE C11A-1NG M588-1.

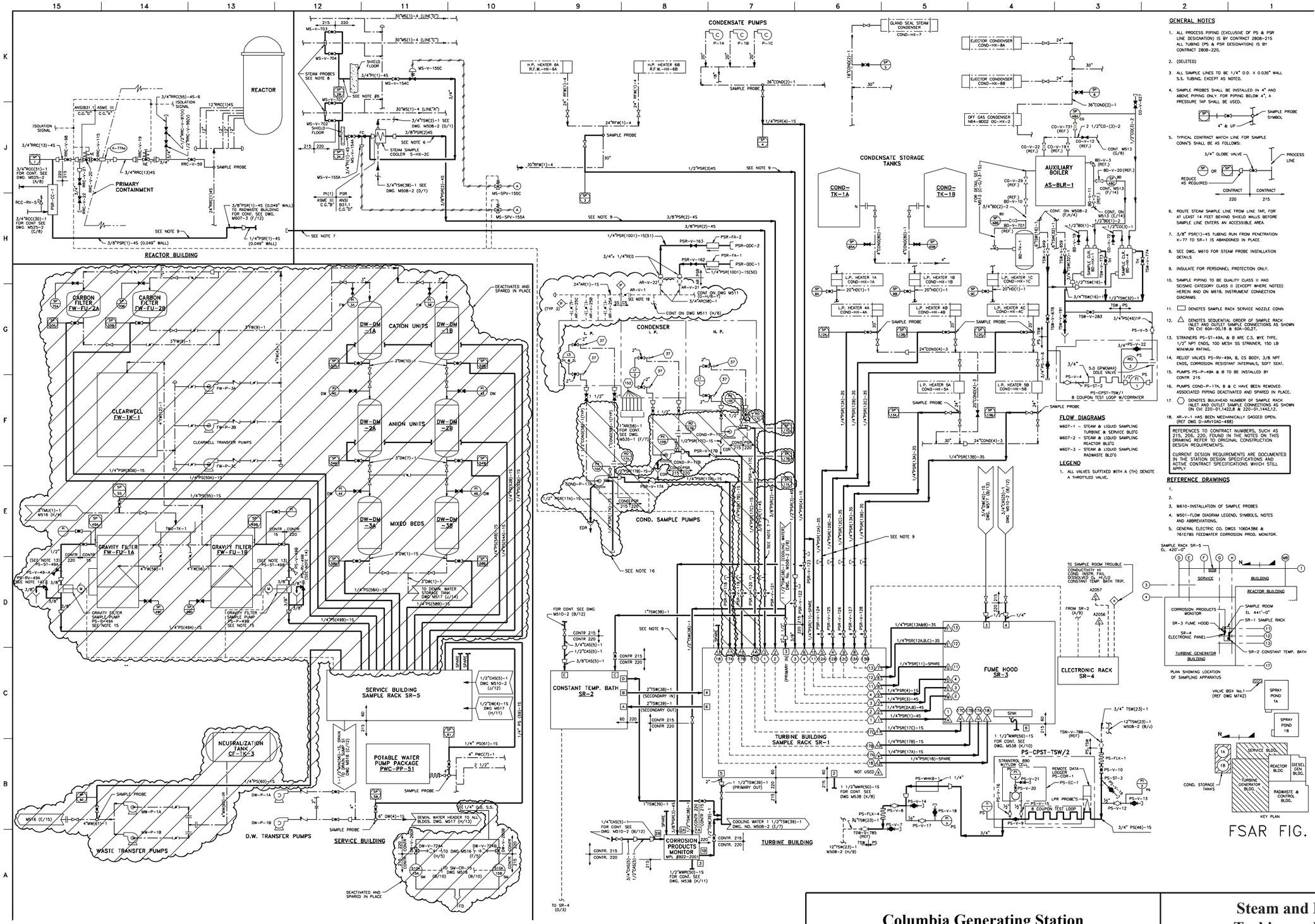

FSAR FIG.

GENERAL NOTES

1. ALL PROCESS PIPING (EXCLUSIVE OF PS & PSR LINE DESIGNATION) IS BY CONTRACT 2808-215 ALL TUBING (PS & PSR DESIGNATION) IS BY CONTRACT 2808-220.
2. (DELETED)
3. ALL SAMPLE LINES TO BE 1/4" O.D. X 0.035" WALL S.S. TUBING, EXCEPT AS NOTED.
4. SAMPLE PROBES SHALL BE INSTALLED IN 4" AND ABOVE PIPING ONLY. FOR PIPING BELOW 4", A PRESSURE TAP SHALL BE USED.

5. TYPICAL CONTRACT MATCH LINE FOR SAMPLE CONN'S SHALL BE AS FOLLOWS:

6. ROUTE STEAM SAMPLE LINE FROM LINE TAP, FOR AT LEAST 14 FEET BEHIND SHIELD WALLS BEFORE SAMPLE LINE ENTERS AN ACCESSIBLE AREA.
7. 3/8" PSR(1)-4S TUBING RUN FROM PENETRATION X-77 TO SR-1 IS ABANDONED IN PLACE.
8. SEE DWG. M610 FOR STEAM PROBE INSTALLATION DETAILS.
9. INSULATE FOR PERSONNEL PROTECTION ONLY.
10. SAMPLE PIPING TO BE QUALITY CLASS II AND SEISMIC CATEGORY CLASS II (EXCEPT WHERE NOTED) HEREIN AND ON M619, INSTRUMENT CONNECTION DIAGRAMS.
11. ▭ DENOTES SAMPLE RACK SERVICE NOZZLE CONN.
12. △ DENOTES SEQUENTIAL ORDER OF SAMPLE RACK INLET AND OUTLET SAMPLE CONNECTIONS AS SHOWN ON CVI 60A-00,1B & 60A-00,2T.
13. STRAINERS PS-ST-49A, & B ARE C.S. WYE TYPE, 1/2" NPT ENDS, 100 MESH SS STRAINER, 150 LB MINIMUM RATING.
14. RELIEF VALVES PS-RV-49A, B, CS BODY, 3/8 NPT ENDS, CORROSION-RESISTANT INTERNALS, SOFT SEAT.
15. PUMPS PS-P-49A & B TO BE INSTALLED BY CONTR 215
16. PUMPS COND-P-17A, B & C HAVE BEEN REMOVED ASSOCIATED PIPING DEACTIVATED AND SPARED IN PLACE.
17. ◯ DENOTES BULKHEAD NUMBER OF SAMPLE RACK INLET AND OUTLET SAMPLE CONNECTIONS AS SHOWN ON CVI 220-01,1422,B & 220-01,1442,L2.
18. AR-V-1 HAS BEEN MECHANICALLY GAGGED OPEN. (REF DWG D-ARV1GAC-488)

REFERENCES TO CONTRACT NUMBERS, SUCH AS 215, 206, 220, FOUND IN THIS NOTES ON THIS DRAWING REFER TO ORIGINAL CONSTRUCTION DESIGN REQUIREMENTS.

CURRENT DESIGN REQUIREMENTS ARE DOCUMENTED IN THE STATION DESIGN SPECIFICATIONS AND ACTIVE CONTRACT SPECIFICATIONS WHICH STILL APPLY

FLOW DIAGRAMS

M607-1 – STEAM & LIQUID SAMPLING TURBINE & SERVICE BLD'G
M607-2 – STEAM & LIQUID SAMPLING REACTOR BLD'G
M607-3 – STEAM & LIQUID SAMPLING RADWASTE BLD'G

LEGEND

1. ALL VALVES SUFFIXED WITH A (TH) DENOTE A THROTTLED VALVE.

REFERENCE DRAWINGS

1.
2.
3. M610-INSTALLATION OF SAMPLE PROBES
4. M501-FLOW DIAGRAM LEGEND, SYMBOLS, NOTES AND ABBREVIATIONS.
5. GENERAL ELECTRIC CO. DWGS 106D4386 & 761E785 FEEDWATER CORROSION PROD. MONITOR.

Columbia Generating Station
Final Safety Analysis Report

Steam and Liquid Sampling - Turbine and Service Buildings

Draw. No. M607-1	Rev. 56	Figure 9.3-3

RCC WATER HEAT EXCHANGERS

RCC FILTER/DEMIN STATION (SEE NOTE 3)

PRIMARY CONTAINMENT

REACTOR VESSEL

SUPPRESSION POOL

LOW PRESSURE CORE SPRAY PUMP LPCS-P-1 E21-C001

HIGH PRESSURE CORE SPRAY PUMP HPCS-P-1 E22-C001

RHR PUMP RHR-P-2A E12-C002A

RHR PUMP RHR-P-2B E12-C002B

RCIC-P-1 E51-C001 RCIC PUMP

ENLARGED PLAN OF REACTOR BUILDING SHOWING LOCATION OF SAMPLE RACK SR-6 AND FUME HOOD SR-7.

EXPANSION TANKS AT DIESEL ENGINES

NOTES:

1. FOR GENERAL NOTES & REFERENCE DRAWINGS SEE M607-1.
2. PIPING & TUBING WITHIN THE REACTOR BUILDING SAMPLE ROOM TO BE QUALITY CLASS I, SEISMIC CATEGORY I. FOR SAMPLE RACK SR-6, FUME HOOD SR-7, AND TSW LINES. SERVICE WATER (SW) LINES TO BE QUALITY CLASS I. SEISMIC CATEGORY I EXCEPT AS NOTED ON M618, INSTRUMENT CONNECTION DIAGRAMS.
3. PIPING, VALVES, AND COMPONENTS REFERENCED TO THIS NOTE ARE CLASSIFIED AS FOLLOWS:
   SEISMIC CATEGORY II ⊕
   QUALITY CLASS II
   CODE GROUP D
   ⊕ HANGERS TO BE DESIGNED TO SEISMIC CATEGORY I LOADS.
4. SAMPLE POINTS ARE NO LONGER FUNCTIONAL. ALTERNATE METHOD OF SAMPLING IS DONE PER THE APPLICABLE PPM.

REFERENCES TO CONTRACT NUMBERS, SUCH AS 215, 206, 220, FOUND IN THE NOTES ON THIS DRAWING REFER TO ORIGINAL CONSTRUCTION DESIGN REQUIREMENTS.

CURRENT DESIGN REQUIREMENTS ARE DOCUMENTED IN THE STATION DESIGN SPECIFICATIONS AND ACTIVE CONTRACT SPECIFICATIONS WHICH STILL APPLY.

KEY PLAN

Columbia Generating Station
Final Safety Analysis Report

Steam and Liquid Sampling - Reactor Building

Draw. No. M607-2	Rev. 28	Figure 09.3-04

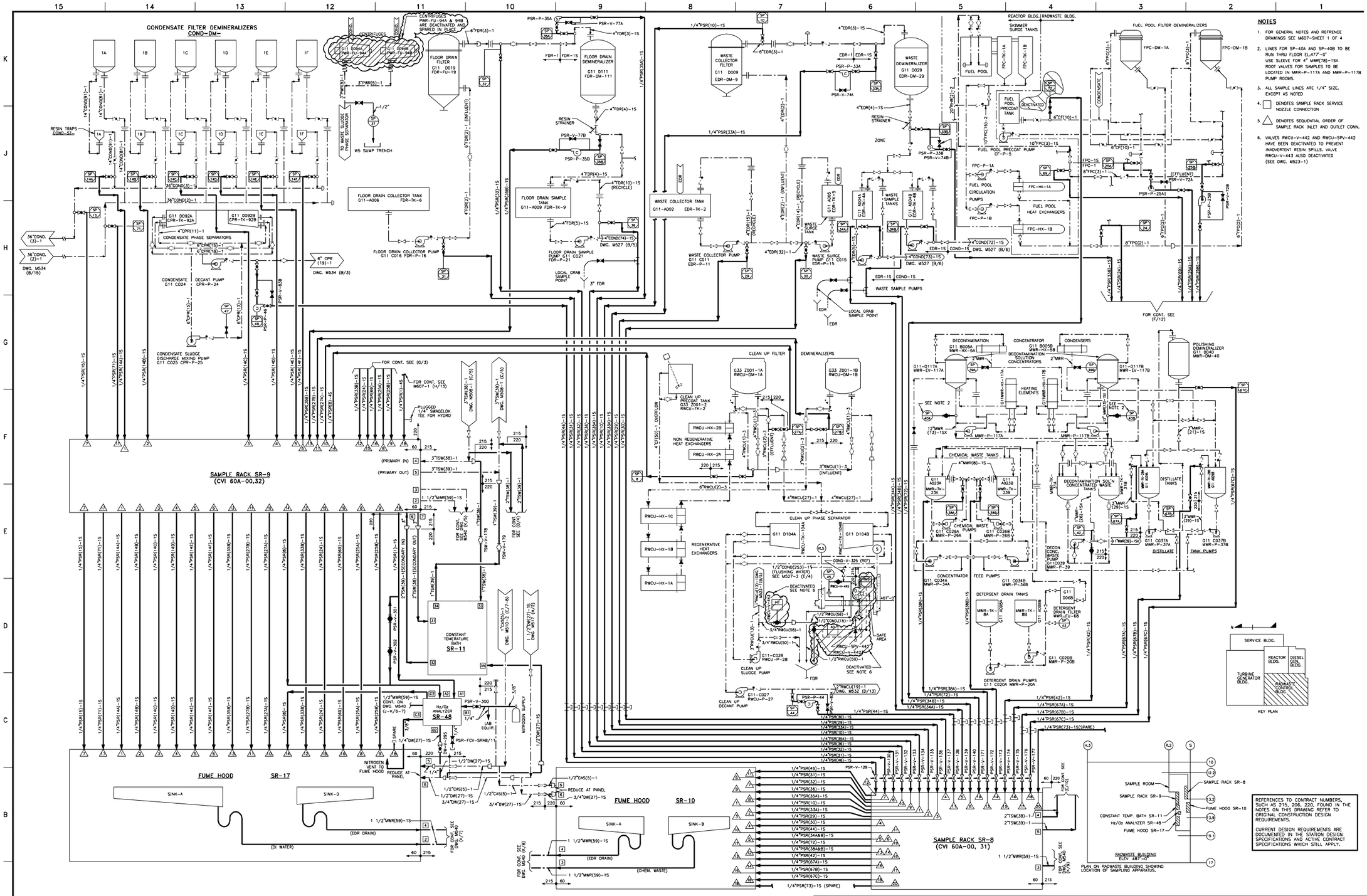

NOTES

1. FOR GENERAL NOTES AND REFRENCE DRAWINGS SEE M607-SHEET 1 OF 4
2. LINES FOR SP-40A AND SP-40B TO BE RUN THRU FLOOR EL.477'-0" USE SLEEVE FOR 4" MWR(78)-15X ROOT VALVES FOR SAMPLES TO BE LOCATED IN MWR-P-117A AND MWR-P-117B PUMP ROOMS.
3. ALL SAMPLE LINES ARE 1/4" SIZE, EXCEPT AS NOTED
4. □ DENOTES SAMPLE RACK SERVICE NOZZLE CONNECTION
5. △ DENOTES SEQUENTIAL ORDER OF SAMPLE RACK INLET AND OUTLET CONN.
6. VALVES RWCU-V-442 AND RWCU-SPV-442 HAVE BEEN DEACTIVATED TO PREVENT INADVERTENT RESIN SPILLS. VALVE RWCU-V-443 ALSO DEACTIVATED (SEE DWG. M523-1)

REFERENCES TO CONTRACT NUMBERS, SUCH AS 215, 206, 220, FOUND IN THE NOTES ON THIS DRAWING REFER TO ORIGINAL CONSTRUCTION DESIGN REQUIREMENTS.

CURRENT DESIGN REQUIREMENTS ARE DOCUMENTED IN THE STATION DESIGN SPECIFICATIONS AND ACTIVE CONTRACT SPECIFICATIONS WHICH STILL APPLY.

Columbia Generating Station
Final Safety Analysis Report

Steam and Liquid Sampling – Radwaste Building

Draw. No. M607-3	Rev. 29	Figure 9.3-5

22A2708, Rev 5
Reference Specification

Sampling of Process Fluids

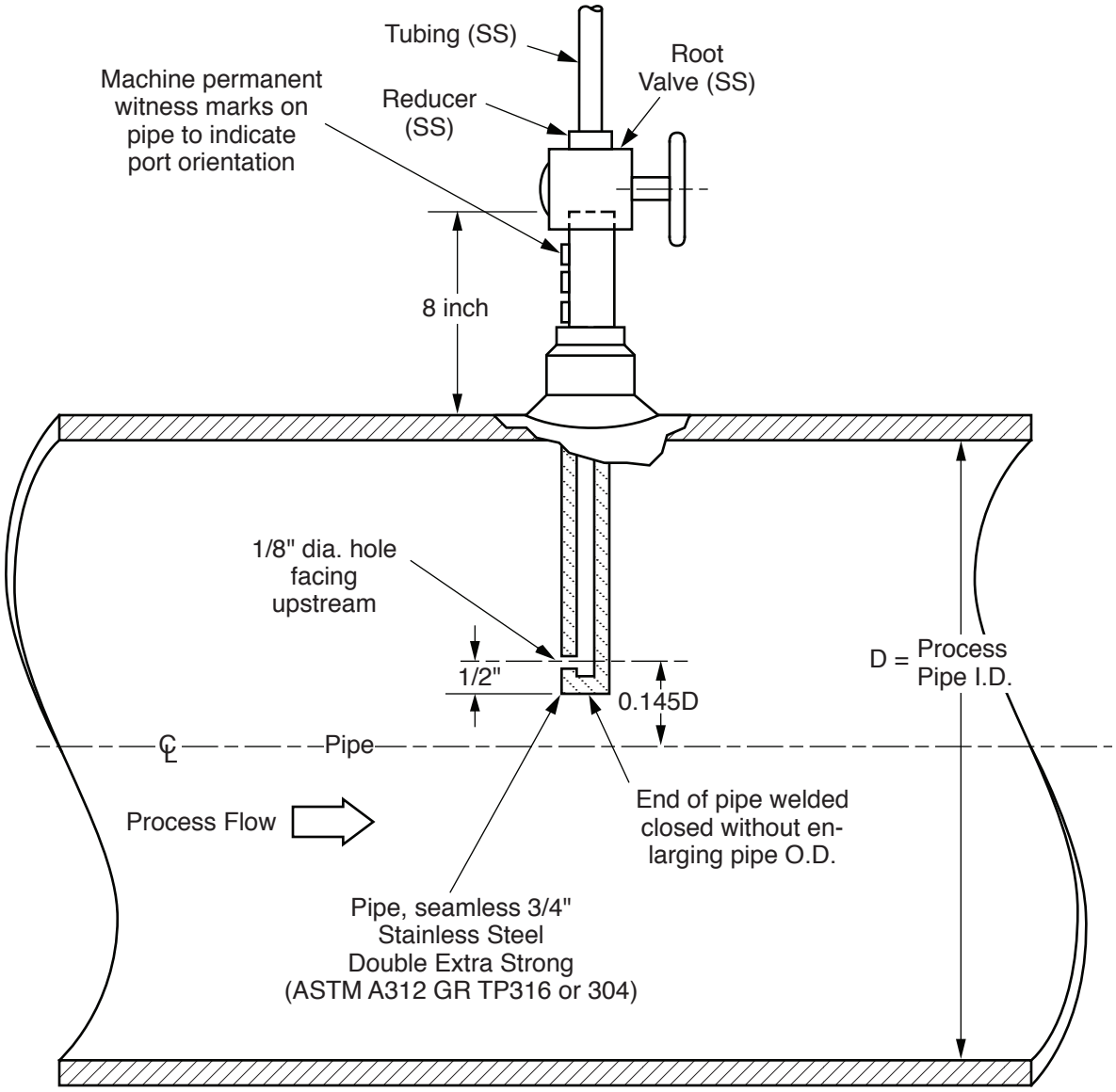

Columbia Generating Station Final Safety Analysis Report	**General Sample Probe**		
	Draw. No. **960690.79**	Rev.	Figure **9.3-6**

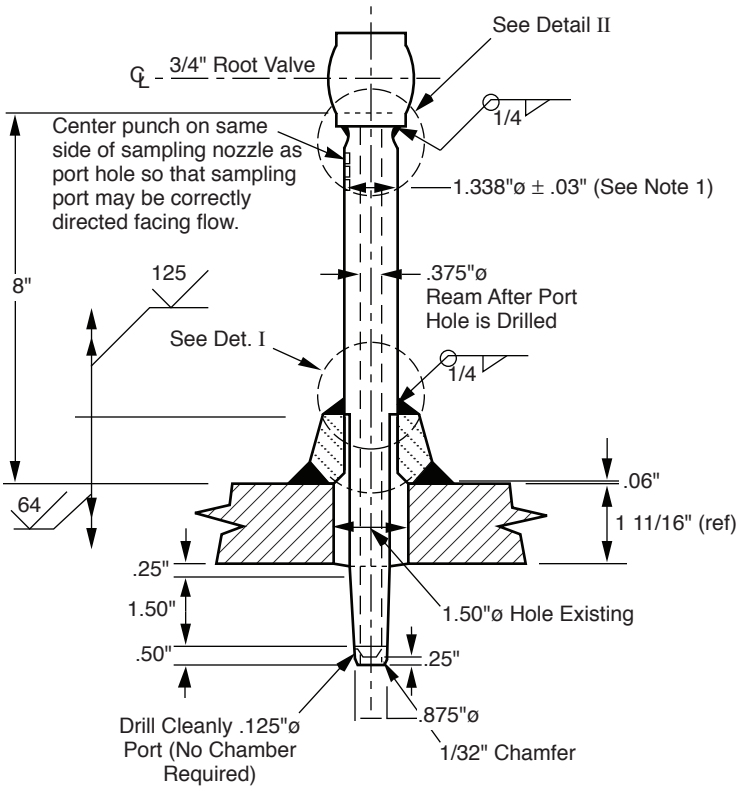

SAMPLE PROBE SP-3
Scale: Half Size

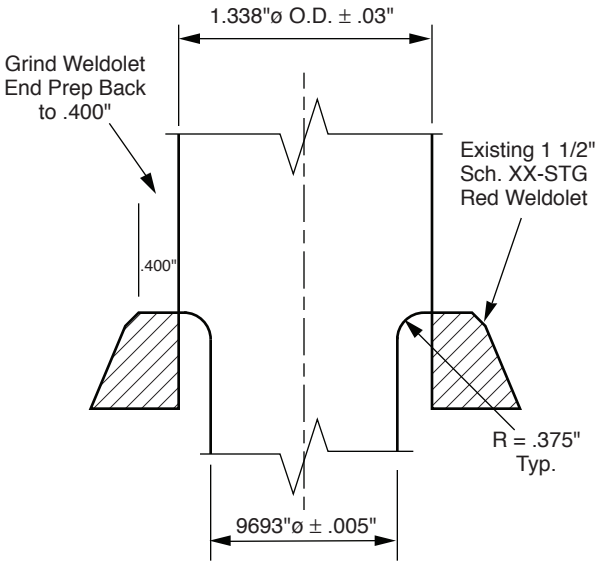

DETAIL I
Scale: 2X

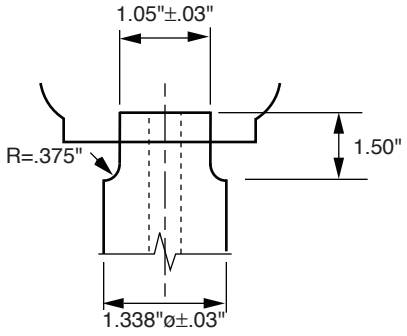

DETAIL II
Scale: Full

Note 1: Sample Probe to Weldolet Weld Omitted for Clarity

Columbia Generating Station Final Safety Analysis Report	**Sample Probe RFW-SP-3**		
	Draw. No. **960690.94**	Rev.	Figure **9.3-7**

22A2708, Rev 5
Reference Specification

Sampling of Process Fluids

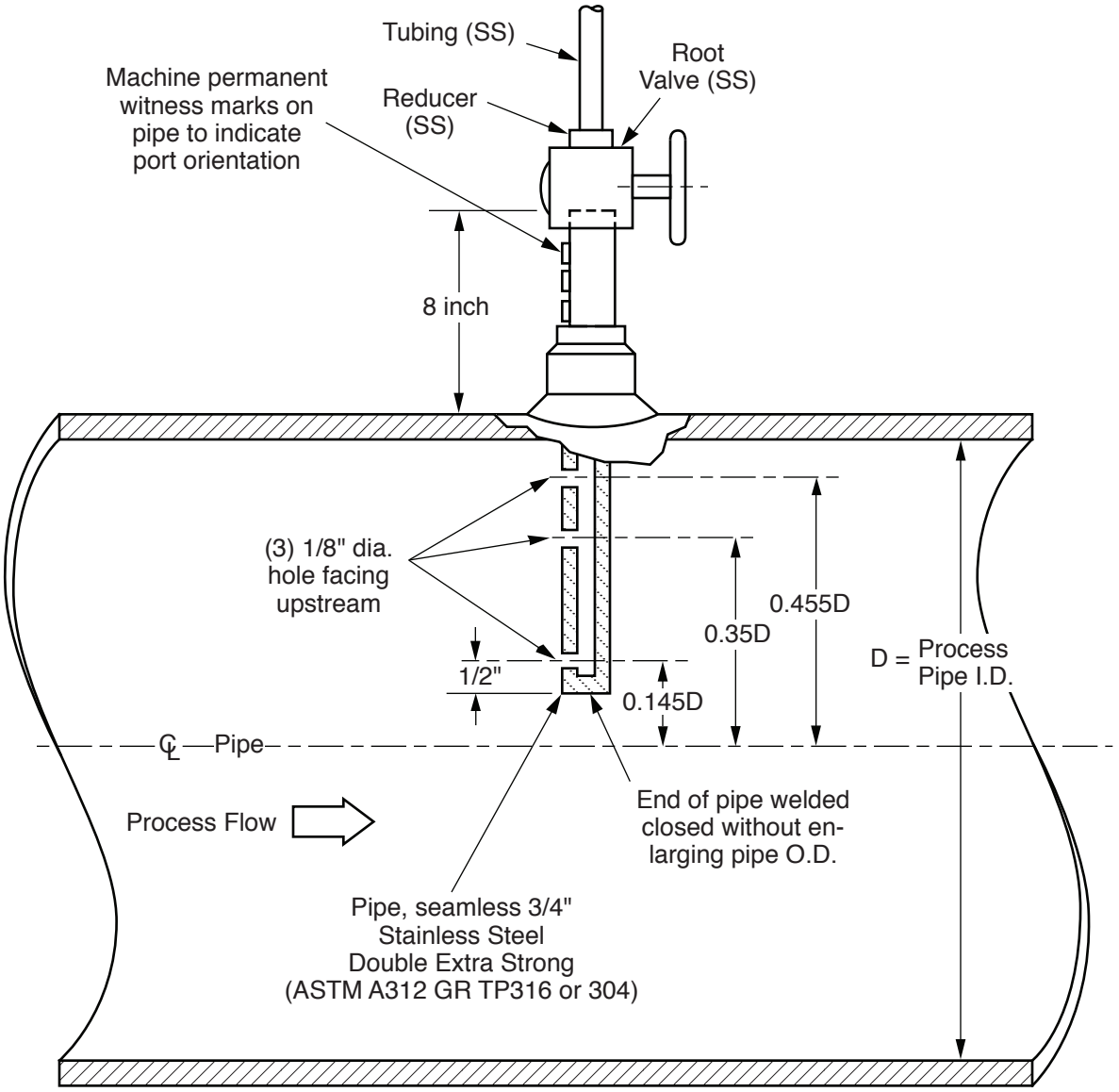

Columbia Generating Station
Final Safety Analysis Report

Feedwater Condensate Sample Probe

Draw. No. 960690.80	Rev.	Figure 9.3-8

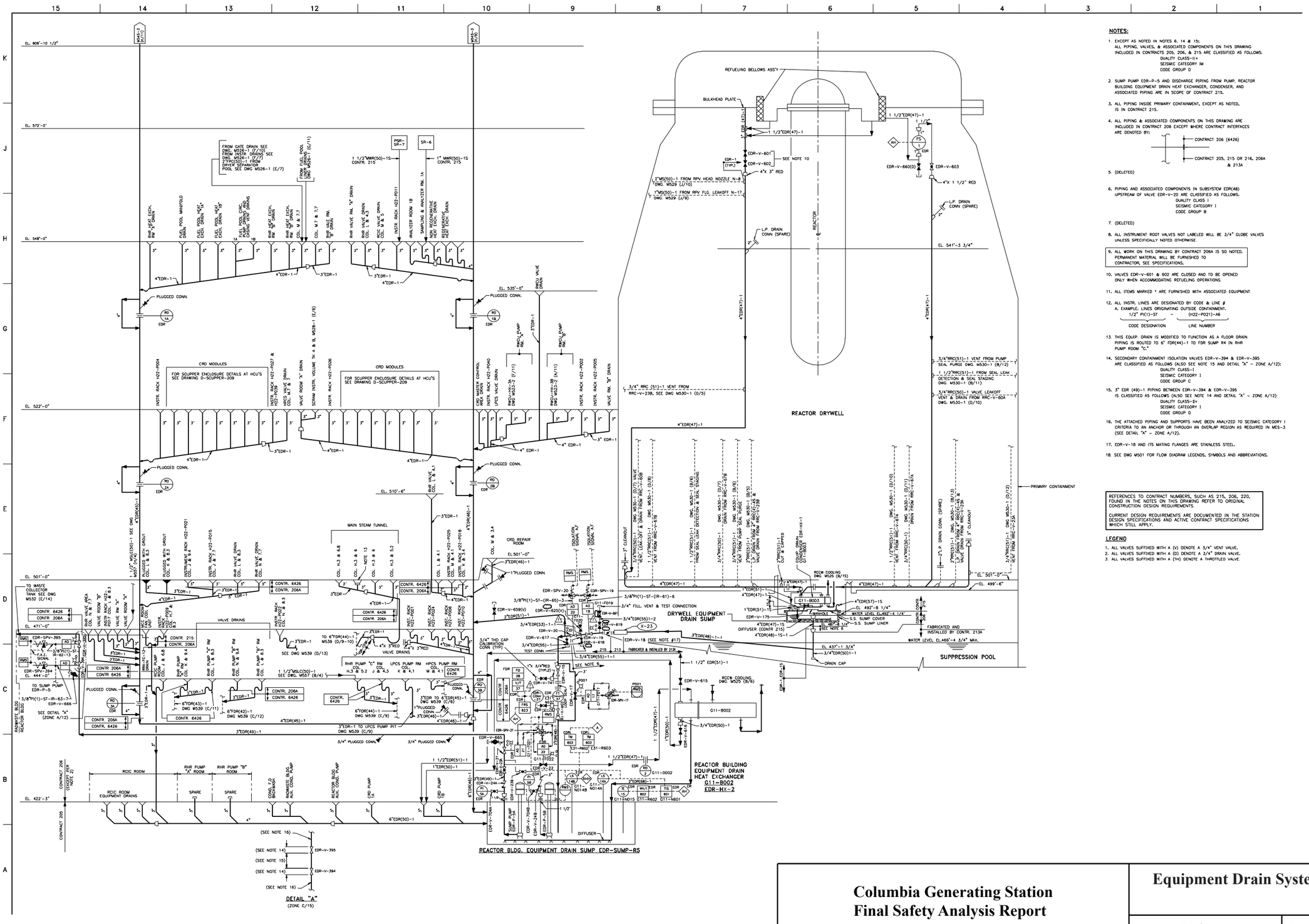

NOTES:

1. EXCEPT AS NOTED IN NOTES 6, 14 & 15; ALL PIPING, VALVES, & ASSOCIATED COMPONENTS ON THIS DRAWING INCLUDED IN CONTRACTS 205, 206, & 215 ARE CLASSIFIED AS FOLLOWS:
   QUALITY CLASS-II+
   SEISMIC CATEGORY IM
   CODE GROUP D
2. SUMP PUMP EDR-P-5 AND DISCHARGE PIPING FROM PUMP, REACTOR BUILDING EQUIPMENT DRAIN HEAT EXCHANGER, CONDENSER, AND ASSOCIATED PIPING ARE IN SCOPE OF CONTRACT 215.
3. ALL PIPING INSIDE PRIMARY CONTAINMENT, EXCEPT AS NOTED, IS IN CONTRACT 215.
4. ALL PIPING & ASSOCIATED COMPONENTS ON THIS DRAWING ARE INCLUDED IN CONTRACT 206 EXCEPT WHERE CONTRACT INTERFACES ARE DENOTED BY:
   CONTRACT 206 (6426)
   CONTRACT 205, 215 OR 216, 208A & 213A
5. (DELETED)
6. PIPING AND ASSOCIATED COMPONENTS IN SUBSYSTEM EDR(48) UPSTREAM OF VALVE EDR-V-20 ARE CLASSIFIED AS FOLLOWS:
   QUALITY CLASS I
   SEISMIC CATEGORY I
   CODE GROUP B
7. (DELETED)
8. ALL INSTRUMENT ROOT VALVES NOT LABELED WILL BE 3/4" GLOBE VALVES UNLESS SPECIFICALLY NOTED OTHERWISE.
9. ALL WORK ON THIS DRAWING BY CONTRACT 206A IS SO NOTED. PERMANENT MATERIAL WILL BE FURNISHED TO CONTRACTOR, SEE SPECIFICATIONS.
10. VALVES EDR-V-601 & 602 ARE CLOSED AND TO BE OPENED ONLY WHEN ACCOMMODATING REFUELING OPERATIONS.
11. ALL ITEMS MARKED * ARE FURNISHED WITH ASSOCIATED EQUIPMENT.
12. ALL INSTR. LINES ARE DESIGNATED BY CODE & LINE #
    A. EXAMPLE: LINES ORIGINATING OUTSIDE CONTAINMENT.
    1/2" P(1)-ST – (H22-P021)-A6
    CODE DESIGNATION — LINE NUMBER
13. THIS EQUIP. DRAIN IS MODIFIED TO FUNCTION AS A FLOOR DRAIN. PIPING IS ROUTED TO 6" FDR(44)-1 TO FDR SUMP R4 IN RHR PUMP ROOM "C."
14. SECONDARY CONTAINMENT ISOLATION VALVES EDR-V-394 & EDR-V-395 ARE CLASSIFIED AS FOLLOWS (ALSO SEE NOTE 15 AND DETAIL "A" – ZONE A/12):
    QUALITY CLASS-I
    SEISMIC CATEGORY I
    CODE GROUP C
15. 3" EDR (49)-1 PIPING BETWEEN EDR-V-394 & EDR-V-395 IS CLASSIFIED AS FOLLOWS (ALSO SEE NOTE 14 AND DETAIL "A" – ZONE A/12):
    QUALITY CLASS-II+
    SEISMIC CATEGORY I
    CODE GROUP D
16. THE ATTACHED PIPING AND SUPPORTS HAVE BEEN ANALYZED TO SEISMIC CATEGORY I CRITERIA TO AN ANCHOR OR THROUGH AN OVERLAP REGION AS REQUIRED IN WES-3 (SEE DETAIL "A" – ZONE A/12).
17. EDR-V-18 AND ITS MATING FLANGES ARE STAINLESS STEEL.
18. SEE DWG M501 FOR FLOW DIAGRAM LEGENDS, SYMBOLS AND ABBREVIATIONS.

REFERENCES TO CONTRACT NUMBERS, SUCH AS 215, 206, 220, FOUND IN THE NOTES ON THIS DRAWING REFER TO ORIGINAL CONSTRUCTION DESIGN REQUIREMENTS.

CURRENT DESIGN REQUIREMENTS ARE DOCUMENTED IN THE STATION DESIGN SPECIFICATIONS AND ACTIVE CONTRACT SPECIFICATIONS WHICH STILL APPLY.

LEGEND

1. ALL VALVES SUFFIXED WITH A (V) DENOTE A 3/4" VENT VALVE.
2. ALL VALVES SUFFIXED WITH A (D) DENOTE A 3/4" DRAIN VALVE.
3. ALL VALVES SUFFIXED WITH A (TH) DENOTE A THROTTLED VALVE.

Columbia Generating Station
Final Safety Analysis Report

Equipment Drain System – Reactor Building

Draw. No. M537	Rev. 79	Figure 9.3-9

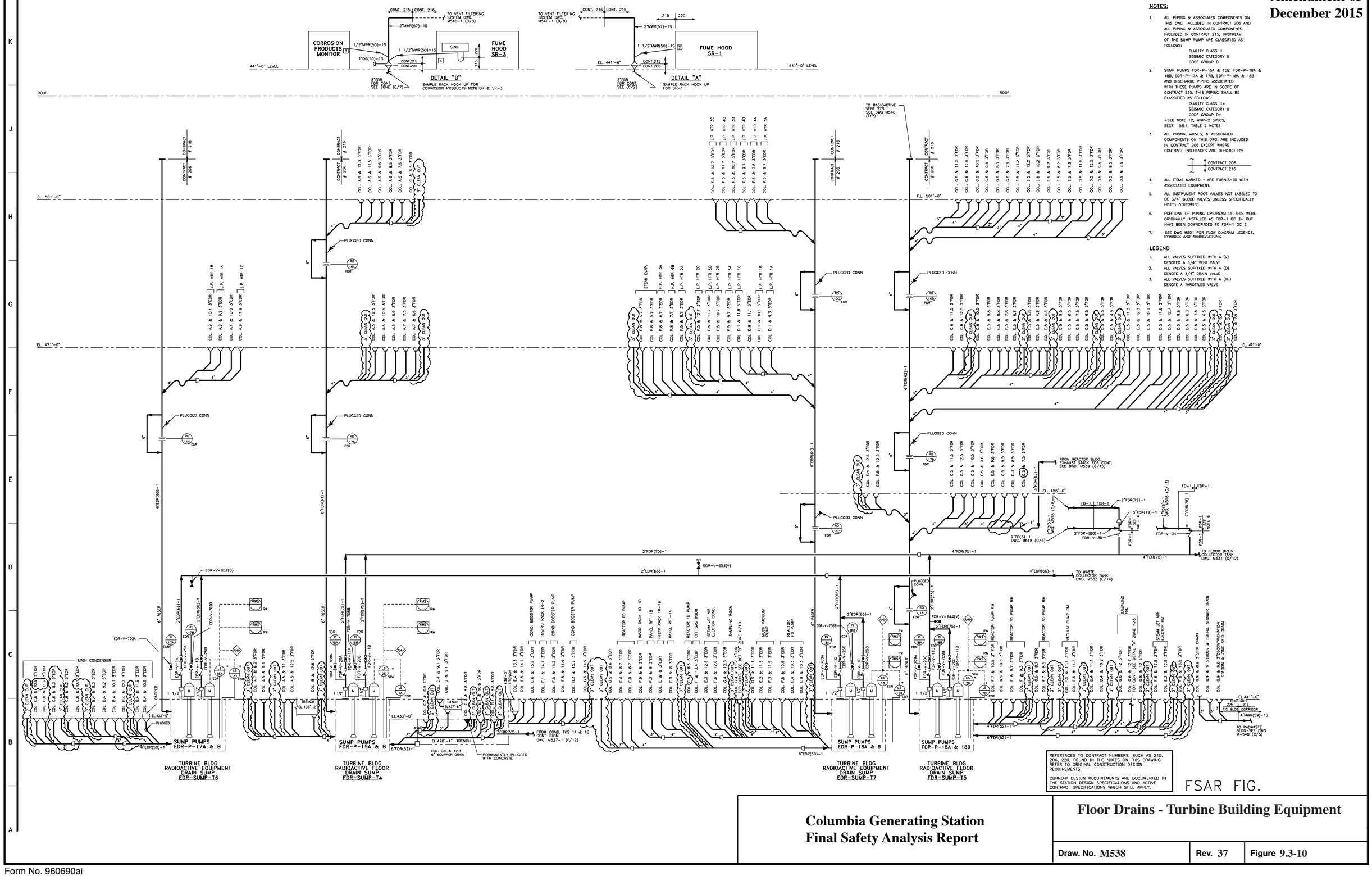

NOTES:

1. ALL PIPING & ASSOCIATED COMPONENTS ON THIS DWG. INCLUDED IN CONTRACT 206 AND ALL PIPING & ASSOCIATED COMPONENTS INCLUDED IN CONTRACT 215, UPSTREAM OF THE SUMP PUMP ARE CLASSIFIED AS FOLLOWS:
   QUALITY CLASS II
   SEISMIC CATEGORY II
   CODE GROUP D
2. SUMP PUMPS FDR-P-15A & 15B, FDR-P-18A & 18B, EDR-P-17A & 17B, EDR-P-18A & 18B AND DISCHARGE PIPING ASSOCIATED WITH THESE PUMPS ARE IN SCOPE OF CONTRACT 215, THIS PIPING SHALL BE CLASSIFIED AS FOLLOWS:
   QUALITY CLASS II+
   SEISMIC CATEGORY II
   CODE GROUP D+
   +SEE NOTE 12, WNP-2 SPECS, SECT. 15B.1. TABLE 2 NOTES
3. ALL PIPING, VALVES, & ASSOCIATED COMPONENTS ON THIS DWG. ARE INCLUDED IN CONTRACT 206 EXCEPT WHERE CONTRACT INTERFACES ARE DENOTED BY:
   CONTRACT 206
   CONTRACT 216
4. ALL ITEMS MARKED * ARE FURNISHED WITH ASSOCIATED EQUIPMENT.
5. ALL INSTRUMENT ROOT VALVES NOT LABELED TO BE 3/4" GLOBE VALVES UNLESS SPECIFICALLY NOTED OTHERWISE.
6. PORTIONS OF PIPING UPSTREAM OF THIS WERE ORIGINALLY INSTALLED AS FDR-1 QC II+ BUT HAVE BEEN DOWNGRADED TO FDR-1 QC II.
7. SEE DWG M501 FOR FLOW DIAGRAM LEGENDS, SYMBOLS AND ABBREVIATIONS.

LEGEND

1. ALL VALVES SUFFIXED WITH A (V) DENOTED A 3/4" VENT VALVE
2. ALL VALVES SUFFIXED WITH A (D) DENOTE A 3/4" DRAIN VALVE
3. ALL VALVES SUFFIXED WITH A (TH) DENOTE A THROTTLED VALVE

REFERENCES TO CONTRACT NUMBERS, SUCH AS 215, 206, 220, FOUND IN THE NOTES ON THIS DRAWING REFER TO ORIGINAL CONSTRUCTION DESIGN REQUIREMENTS

CURRENT DESIGN REQUIREMENTS ARE DOCUMENTED IN THE STATION DESIGN SPECIFICATIONS AND ACTIVE CONTRACT SPECIFICATIONS WHICH STILL APPLY.

Columbia Generating Station
Final Safety Analysis Report

Floor Drains - Turbine Building Equipment

Draw. No. M538	Rev. 37	Figure 9.3-10

LEGEND

1. ALL VALVES SUFFIXED WITH A (TH) DENOTE A THROTTLED VALVE.

NOTES:

1a. ALL PIPING AND ASSOCIATED COMPONENTS ON THIS DWG. INCLUDED IN CONTRACT 206 AND ALL PIPING & ASSOCIATED COMPONENTS INCLUDED IN CONTRACT 215, UPSTREAM OF THE SUMP PUMPS, EXCEPT AS NOTED IN 1b ARE CLASSIFIED AS FOLLOWS:
QUALITY CLASS – II
SEISMIC CATEGORY – II ⊕
CODE GROUP – D
⊕ HANGERS TO BE DESIGNED TO SEISMIC CAT. I LOADS

1b. ALL PIPING & ASSOCIATED COMPONENTS ON THIS DWG. UPSTREAM OF THE SUMP PUMPS IN THE CONTROL BUILDING ARE CLASSIFIED AS FOLLOWS:
QUALITY CLASS – II
SEISMIC CATEGORY – II ⊕
CODE GROUP – D
⊕ HANGERS TO BE DESIGNED TO SEISMIC CATEGORY I LOADS.
SUMP PUMPS FDR–P–8, FRD–P–9, FDR–P–12, EDR–P–13, & MWR–P–11 & DISCHARGE PIPING ASSOCIATED WITH THESE PUMPS ARE IN SCOPE OF CONTRACT 215, THIS PIPING SHALL BE CLASSIFIED AS FOLLOWS:
QUALITY CLASS – II+
SEISMIC CATEGORY – II ⊕
CODE GROUP – D+

⊕ HANGERS TO BE DESIGNED TO SEISMIC CAT. I LOADS
+ SEE NOTE 12, WNP–2 SPEC, SECT. 15B.1, TABLE 2 NOTES

3. ALL PIPING, VALVES, & ASSOCIATED COMPONENTS ON THIS DRAWING ARE INCLUDED IN CONTRACT 206 EXCEPT WHERE CONTRACT INTERFACES ARE DENOTED BY:
CONTRACT 216
CONTRACT 206
CONTRACT 216
CONTRACT 215

4. ALL INSTRUMENT ROOT VALVES NOT LABELED TO 3/4" GLOBE VALVES UNLESS SPECIFICALLY NOTED OTHERWISE.

5. FOR SCUPPER ENCLOSURE DETAILS SEE DRAWING D–SCUPPER–210.

6. SEE DWG M501 FOR FLOW DIAGRAM LEGENDS, SYMBOLS AND ABBREVIATIONS.

DETAIL "B"
SAMPLE RACK HOOK–UP FOR SR–8 & SR–10

DETAIL "C"
SAMPLE RACK HOOK–UP FOR SR–9, SR–17, & SR–48

DETAIL "A"
(SINK HOOK UP)

DETAIL "D"

SUMP	REFERENCE DWG & ZONE
W–1	M549–2 (E/9)
W–2	M549–2 (C/9)
W–3	M549–2 (C/11)
W–4	M549–2 (C/5)
W–5	M549–2 (F/5)

FLOOR DRAIN SUMP FDR–SUMP–W1

EQUIPMENT DRAIN SUMP FDR–SUMP–W3

FLOOR DRAIN SUMP FDR–SUMP–W2

CHEMICAL WASTE SUMP MWR–SUMP–W4

FLOOR DRAIN SUMP FDR–SUMP–W5

EQUIPMENT DRAIN SUMP FDR–SUMP–W6

REFERENCES TO CONTRACT NUMBERS, SUCH AS 215, 206, 220, FOUND IN THE NOTES ON THIS DRAWING REFER TO ORIGINAL CONSTRUCTION DESIGN REQUIREMENTS.

CURRENT DESIGN REQUIREMENTS ARE DOCUMENTED IN THE STATION DESIGN SPECIFICATIONS AND ACTIVE CONTRACT SPECIFICATIONS WHICH STILL APPLY.

FSAR FIG.

Columbia Generating Station
Final Safety Analysis Report

Radwaste Building Equipment and Floor Drains

Draw. No. M540	Rev. 55	Figure 9.3-11

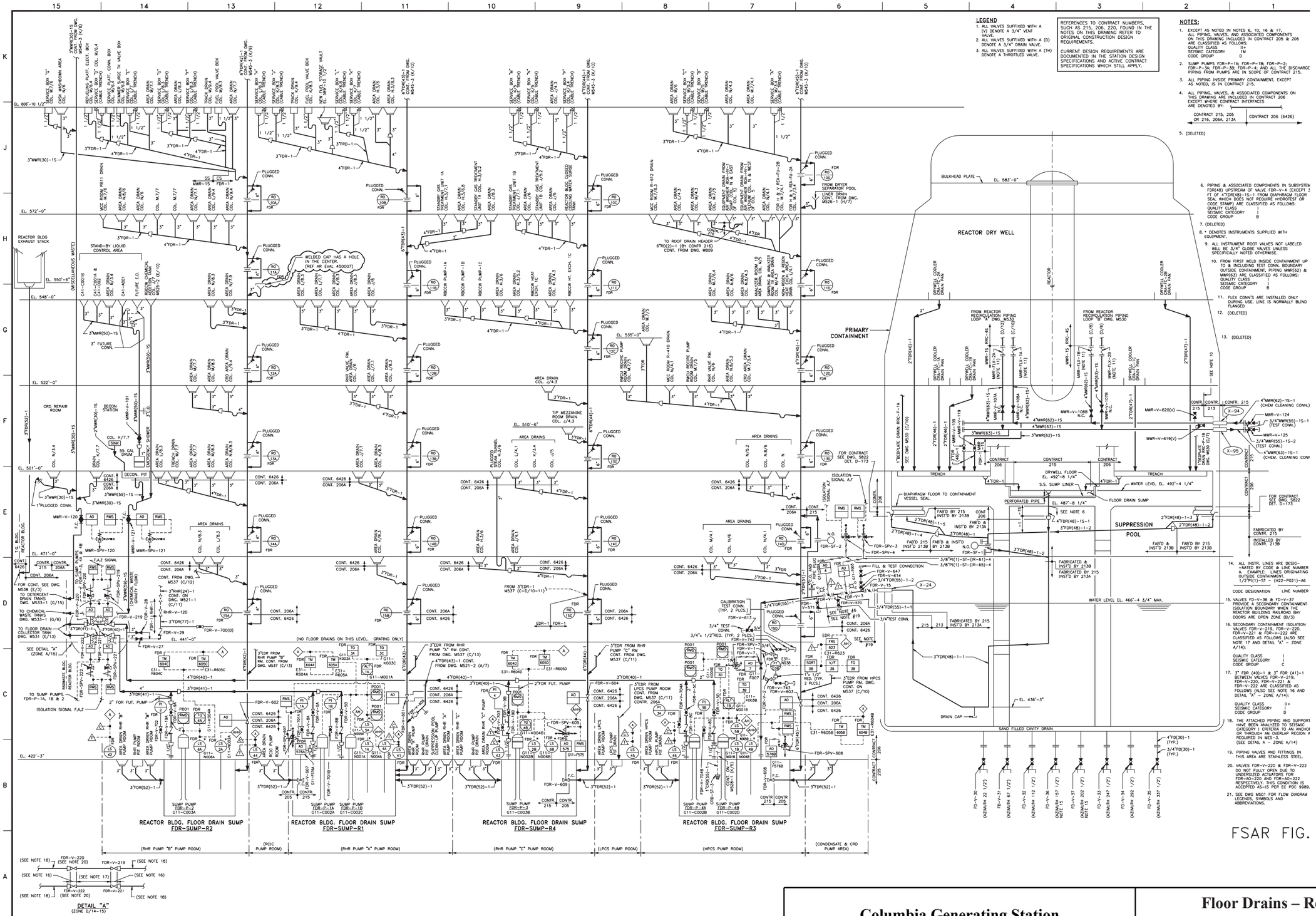

FSAR FIG.

Columbia Generating Station
Final Safety Analysis Report

Floor Drains – Reactor Building

Draw. No. M539	Rev. 91	Figure 9.3-12

Form No. 960690ai

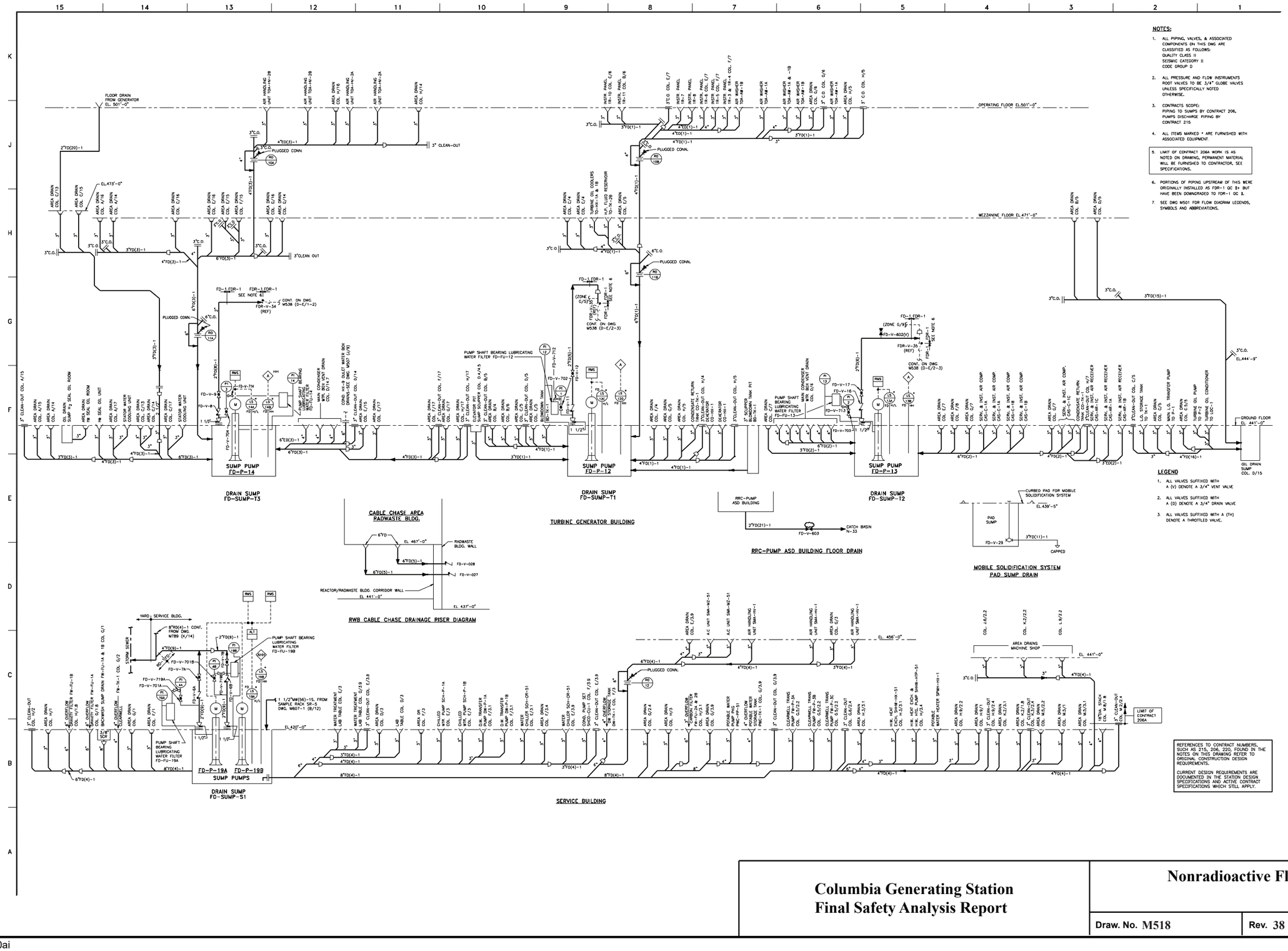

Columbia Generating Station
Final Safety Analysis Report

Nonradioactive Floor Drains

Draw. No. M518	Rev. 38	Figure 9.3-13

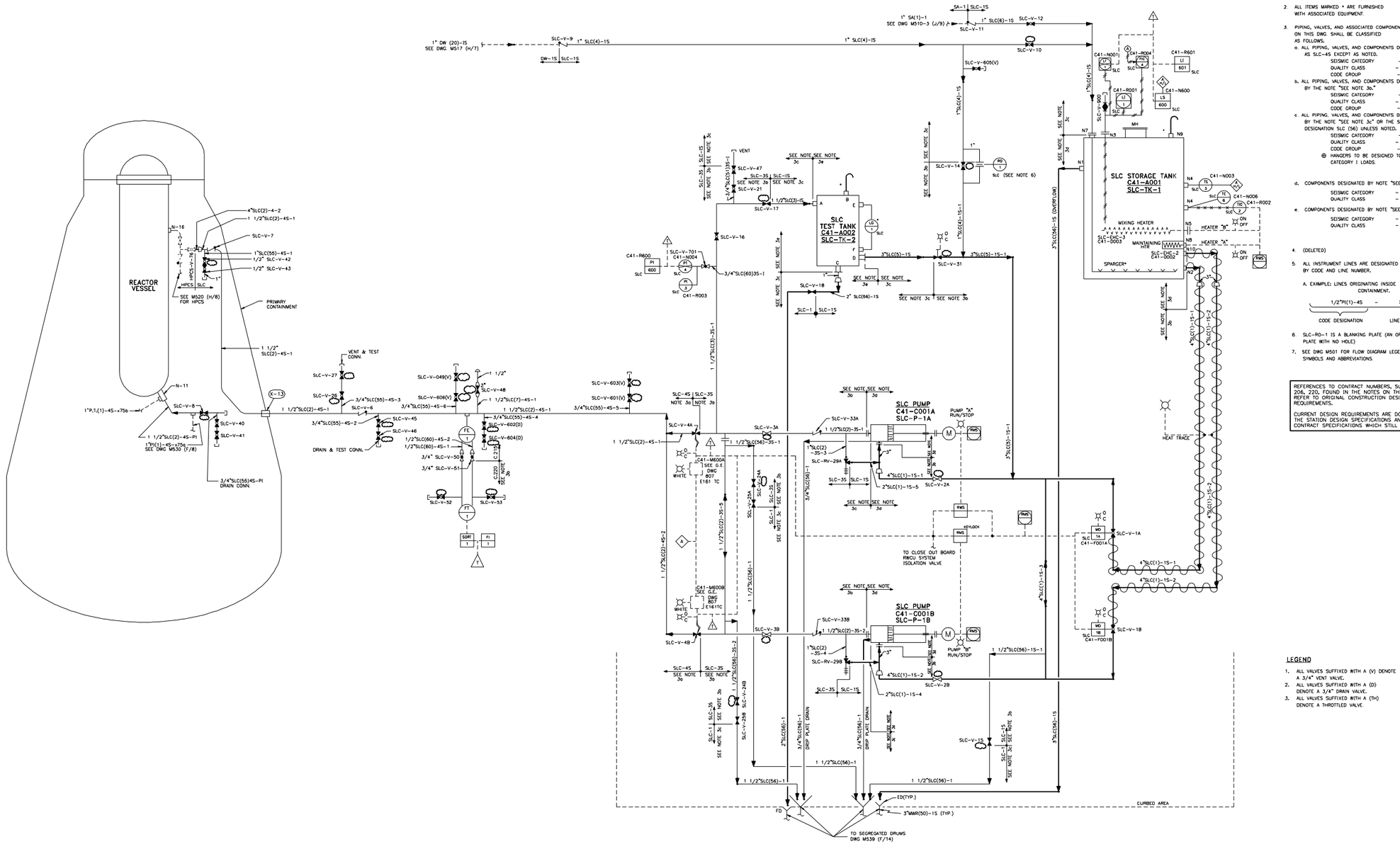

NOTES:

1. ALL INSTRUMENT ROOT VALVES NOT LABELED SHALL BE 3/4" GLOBE VALVES UNLESS SPECIFICALLY NOTED OTHERWISE.
2. ALL ITEMS MARKED * ARE FURNISHED WITH ASSOCIATED EQUIPMENT.
3. PIPING, VALVES, AND ASSOCIATED COMPONENTS ON THIS DWG. SHALL BE CLASSIFIED AS FOLLOWS:
   a. ALL PIPING, VALVES, AND COMPONENTS DESIGNATED AS SLC-4S EXCEPT AS NOTED.
      SEISMIC CATEGORY – I
      QUALITY CLASS – I
      CODE GROUP – A
   b. ALL PIPING, VALVES, AND COMPONENTS DESIGNATED BY THE NOTE "SEE NOTE 3b."
      SEISMIC CATEGORY – I
      QUALITY CLASS – I
      CODE GROUP – B
   c. ALL PIPING, VALVES, AND COMPONENTS DESIGNATED BY THE NOTE "SEE NOTE 3c" OR THE SYSTEM DESIGNATION SLC (56) UNLESS NOTED.
      SEISMIC CATEGORY – II ⊕
      QUALITY CLASS – II
      CODE GROUP – D
      ⊕ HANGERS TO BE DESIGNED TO SEISMIC CATEGORY I LOADS.
   d. COMPONENTS DESIGNATED BY NOTE "SEE NOTE 3d"
      SEISMIC CATEGORY – I
      QUALITY CLASS – II *
   e. COMPONENTS DESIGNATED BY NOTE "SEE NOTE 3e"
      SEISMIC CATEGORY – II
      QUALITY CLASS – II
4. (DELETED)
5. ALL INSTRUMENT LINES ARE DESIGNATED BY CODE AND LINE NUMBER.
   A. EXAMPLE: LINES ORIGINATING INSIDE CONTAINMENT.
      1/2"PI(1)-4S – X 106
      CODE DESIGNATION / LINE NUMBER
6. SLC-RO-1 IS A BLANKING PLATE (AN ORIFICE PLATE WITH NO HOLE)
7. SEE DWG M501 FOR FLOW DIAGRAM LEGENDS, SYMBOLS AND ABBREVIATIONS.

REFERENCES TO CONTRACT NUMBERS, SUCH AS 215, 206, 220, FOUND IN THE NOTES ON THIS DRAWING REFER TO ORIGINAL CONSTRUCTION DESIGN REQUIREMENTS.

CURRENT DESIGN REQUIREMENTS ARE DOCUMENTED IN THE STATION DESIGN SPECIFICATIONS AND ACTIVE CONTRACT SPECIFICATIONS WHICH STILL APPLY.

LEGEND

1. ALL VALVES SUFFIXED WITH A (V) DENOTE A 3/4" VENT VALVE.
2. ALL VALVES SUFFIXED WITH A (D) DENOTE A 3/4" DRAIN VALVE.
3. ALL VALVES SUFFIXED WITH A (TH) DENOTE A THROTTLED VALVE

Columbia Generating Station
Final Safety Analysis Report

Standby Liquid Control System - Reactor Building

Draw. No. M522	Rev. 40	Figure 9.3-14

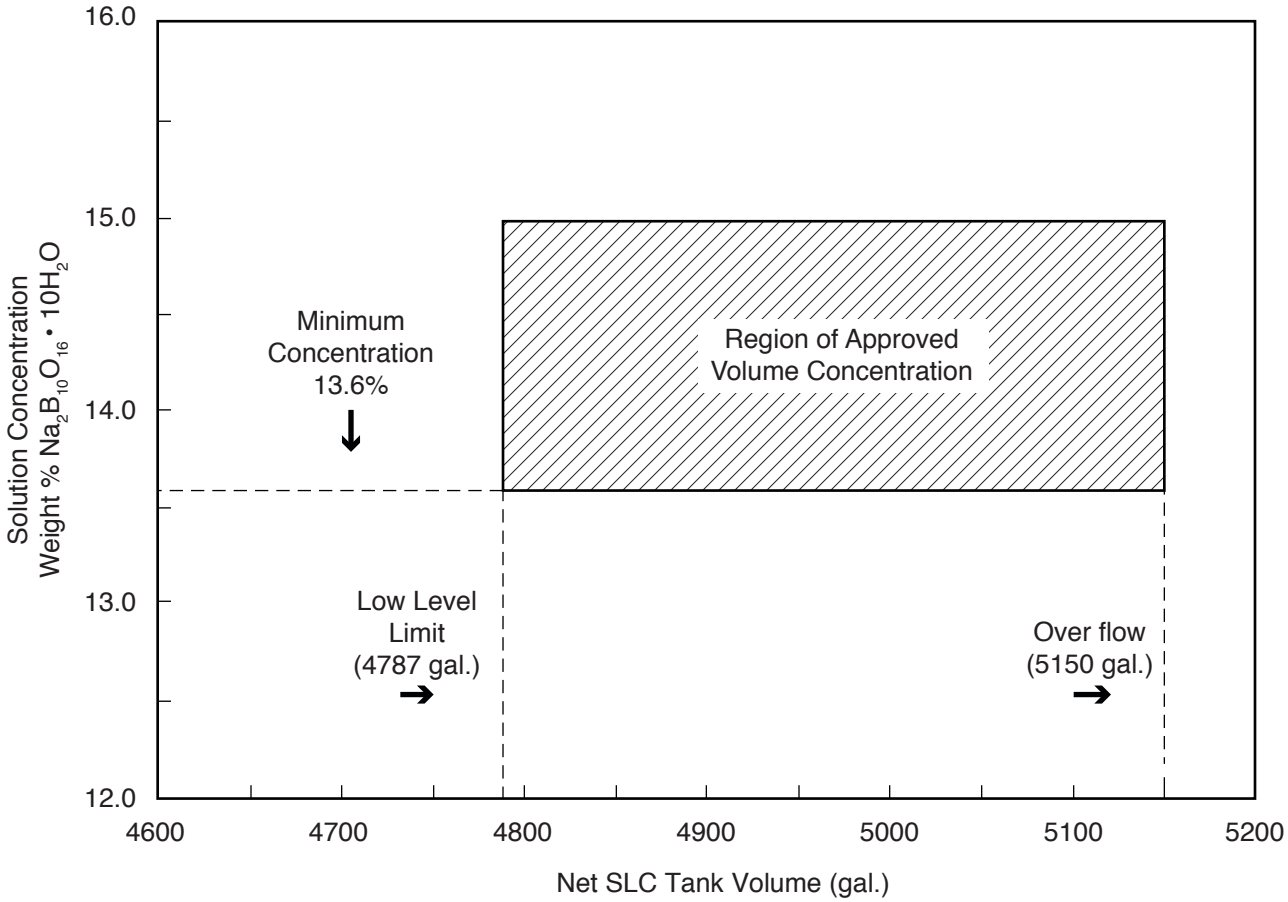

Sodium Pentaborate Decahydrate
($Na_2B_{10}O_{16} \cdot 10H_2O$)
Volume Concentration Requirements

The minimum required volume to ensure reactor shutdown is 4587 gal. The Low Level Limit (4587 + 200 gal) includes 200 gal process margin to minimize air entrainment in the pumps. Operators may shutoff the pumps at 200 gal net SLC Tank Volume or less.

Columbia Generating Station Final Safety Analysis Report	**Sodium Pentaborate Decahydrate Volume Concentration Requirements**		
	Draw. No. **960690.77**	Rev.	Figure **9.3-15**

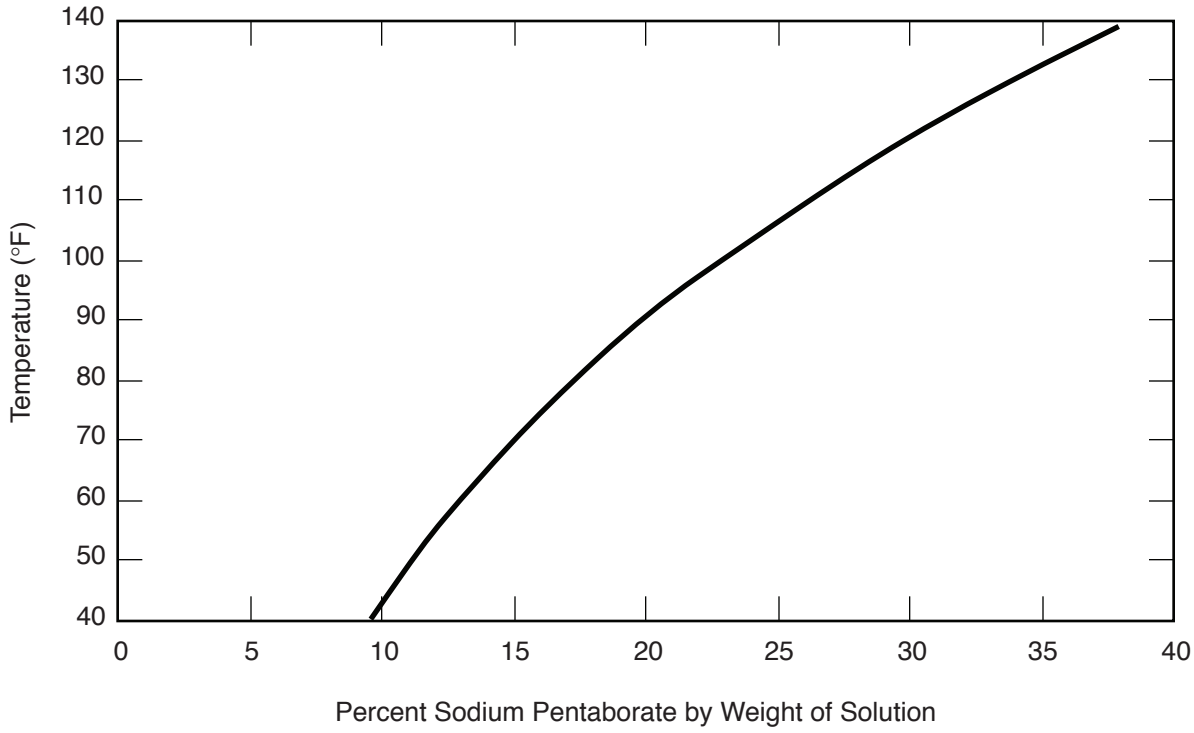

Columbia Generating Station **Final Safety Analysis Report**	**Saturation Temperature of Sodium Pentaborate Solution**		
	Draw. No. **960690.78**	Rev.	Figure **9.3-16**

NOTES

1. ALL PIPING, VALVES, AND ASSOCIATED COMPONENTS ON THIS DRAWING SHALL BE CLASSIFIED AS FOLLOWS:
   QUALITY CLASS II
   SEISMIC CATEGORY I/M
   CODE GROUP D
2. ALL PIPING COMPONENTS AND INSTRUMENTATION SHOWN IN THE CONFINES OF THE SKID PACKAGE, EXCEPT QUICK DISCONNECTS FOR LOW DRAIN, ARE SUPPLIED WITH THE ASSOCIATED EQUIPMENT.
3. FOR FLOW DIAGRAM LEGEND, SYMBOLS AND ABBREVIATIONS SEE DRAWING M501 AND CVI 02-02A42-04.2.
4. 28 DURABILITY TEST SECTIONS (COUPONS) WERE INITIALLY SUPPLIED WITH THE SAMPLE SKID. HOWEVER THESE COUPONS ARE PERIODICALLY REMOVED FOR SAMPLING, THEREFORE NUMBER OF COUPONS VARIES.

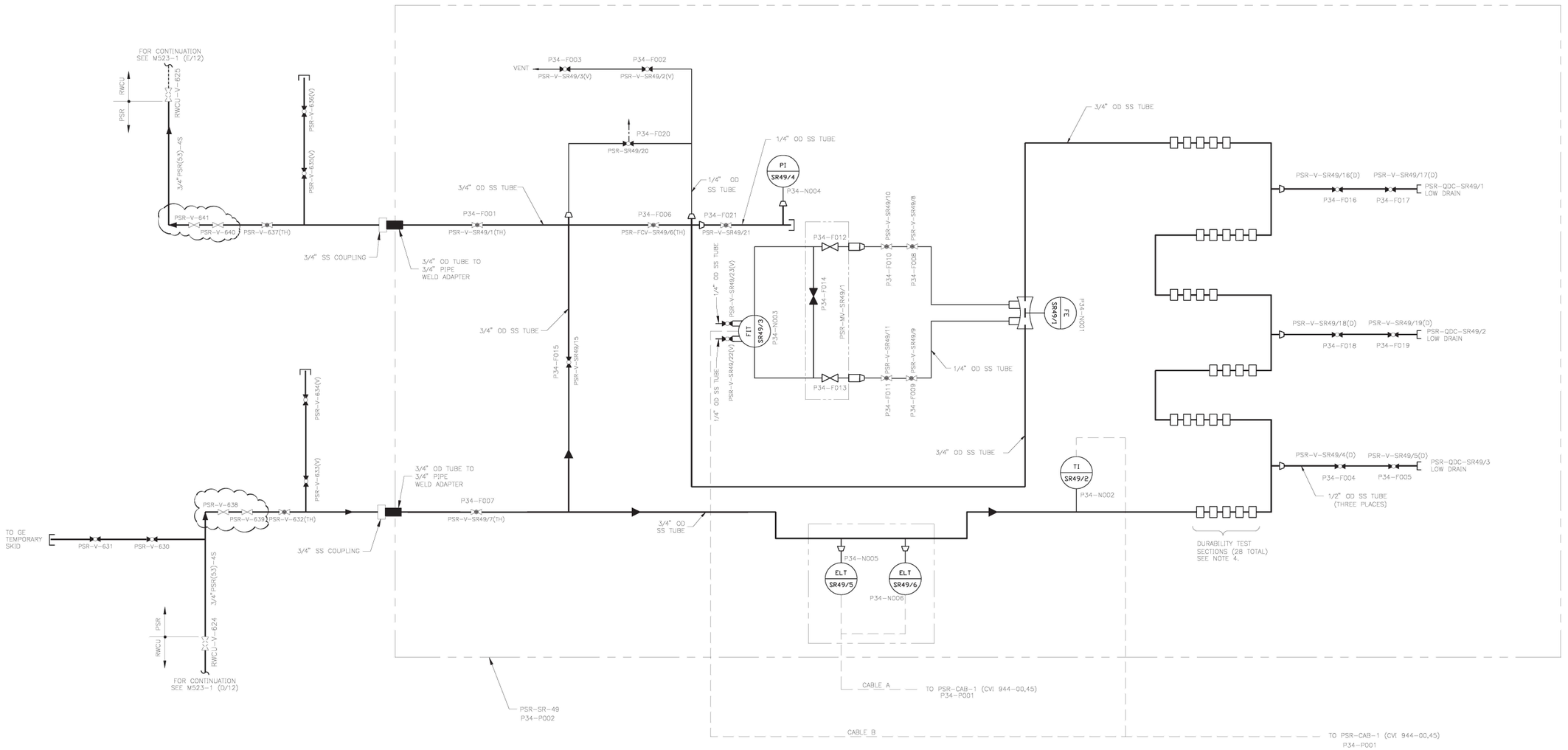

Columbia Generating Station **Final Safety Analysis Report**	**Flow Diagram Steam and Liquid Sampling Reactor Building**		
	Draw. No. **M607-4**	Rev. **2**	Figure **9.3-17**

9.4 HEATING, VENTILATING, AND AIR CONDITIONING SYSTEMS

The various heating, ventilating, and air conditioning (HVAC) systems serving the plant are designed to provide suitable environmental conditions throughout the plant for personnel comfort and/or equipment operation.

The following performance objectives are implemented in the design of the HVAC systems:

a. Maintain appropriate ambient temperature and humidity conditions for station operating personnel and equipment,

b. Control and monitor all potentially radioactive airborne releases from the plant so that releases are within the limits of 10 CFR Part 20,

c. Control and limit airborne radioactive contaminants within the plant structures by inducing air flow from areas of low contamination potential into areas of progressively higher contamination potential, and

d. Remove all potentially explosive gases, noxious fumes, or smoke from the plant.

In addition, a number of HVAC systems are required to ensure a safe shutdown of the reactor or to mitigate the results of the design basis accident. These systems are designed to continue operation in the event of any or all of the following events:

a. Safe shutdown earthquake (SSE),
b. Loss of offsite power,
c. Single failure of any active component, and
d. Design basis accident.

The effect of a loss of normal ventilation during a station blackout is discussed in Appendix 8A.

The following areas containing engineered safety features (ESF) equipment are serviced by critical HVAC systems:

a. Main control room/cable spreading room/critical switchgear area,
b. Diesel generator building,
c. Standby service water (SW) pump houses,
d. Reactor building emergency pump rooms,
e. Reactor building critical electrical equipment rooms, and
f. Diesel generator cable area corridor.

The balance of the plant structures are serviced by noncritical HVAC systems.

The following outdoor design conditions are used in the design of HVAC systems having ESF:

Summer:	105°F dry-bulb, 71°F wet-bulb
Winter:	0°F dry-bulb

The extreme outdoor conditions are:

Summer:	115°F dry-bulb
Winter:	-27°F

The effect of these extreme outdoor conditions on main control room/cable spreading room and critical switchgear area temperatures is negligible for the frequency and duration of these conditions since the rooms are interior rooms and the total load changes due to fresh air (maximum 5% of total air flow for control room and maximum 10% of total air flow for critical switchgear area) are within equipment capacity limits for maintaining inside design conditions. The mechanical equipment rooms housing these three systems are of extra heavy exterior wall and roof construction and the effect of extreme outside conditions is considered to be negligible for the frequency and duration of these extremes.

Extreme outside conditions have no effect on reactor building emergency pump rooms and reactor building critical electrical equipment rooms since these are interior rooms without any outdoor air supply during emergency. During normal operation the emergency pumps are not running and the critical electrical equipment is operating at a reduced load. The battery rooms are provided with room heaters to prevent excessive cooling from SW that could affect battery capacity.

The effect of extreme outdoor conditions on the diesel generator building ventilation system, diesel generator area cable cooling system, and SW pump house ventilation systems is discussed in Sections 9.4.7, 9.4.8, and 9.4.10 respectively.

9.4.1 MAIN CONTROL ROOM/CABLE SPREADING ROOM/CRITICAL SWITCHGEAR AREA

9.4.1.1 Design Bases

The critical switchgear area, cable spreading room, and main control room are located, one above the other, on three successive levels of the radwaste building, with the main control room on the top level. Each level is served by a separate HVAC system. Redundant HVAC systems are provided for the main control room and the cable spreading room. These three systems are ESF systems and all system components, except the radwaste building chilled water system (WCH) (see Section 9.4.4) to the control room, cable spreading room and critical

switchgear area systems, and the plant service water (TSW) system to the switchgear area system, are designed to operate under all emergency modes. During an emergency condition, the SW system is used as the cooling medium for the cable spreading room and switchgear area systems. The control room chilled water (CCH) system, or SW system when capable of the required heat removal, is used as the cooling medium for the control room HVAC system during emergency conditions.

The three systems are designed to satisfy the following design criteria:

a. Main control room

During normal operation the main control room ambient conditions are normally maintained at 75°F ±3° dry-bulb temperature by the radwaste chillers. In the event both radwaste chillers are inoperative (emergency condition), the control room temperature will be maintained to ensure 30 days continuous occupancy of the control room and ensure the equipment qualification temperature limit is not exceeded. The control room habitability design condition is 85ºF with a sustained occupancy of 10 persons. The equipment qualification temperature limit for equipment cooled by the control room HVAC system is 104ºF. The CCH system is the preferred cooling source to the control room HVAC system, however, SW is an acceptable alternate cooling source when evaluated as capable of maintaining the bounding 85ºF long term steady state control room temperature. The ingress of smoke or combustion vapors (due to a fire within the plant but external to the control room), or of airborne radioactive contaminants released due to the design basis accident, is minimized by pressurizing the control room. During a loss-of-coolant accident (LOCA), the control room emergency pressurization mode through the emergency filter unit maintains a positive pressure with respect to its surroundings as measured in the cable spreading room.

Three air intakes are provided from which fresh air can be drawn. One local intake is provided for normal operation and two remote intakes are provided for normal and emergency operation. Fire external to the plant and any ingress of smoke or combustion vapors are detected by smoke detectors in the control room fresh air intake ducting, which will alarm in the control room.

Isolation of the control room fresh air intakes would place the control room HVAC in an unfiltered recirculation mode. In the event of a hazardous chemical release, the control room HVAC is manually isolated into the recirculation mode without filtration through the emergency filter units by closing the normal fresh air isolation damper.

b. Cable spreading room

The cable spreading room HVAC system is designed to maintain the cable spreading room and the remote shutdown room at approximately 80°F during

normal operation and to limit the temperature below equipment operability limits during all emergency modes of operation. See Table 3.11-1.

c. Critical switchgear area

The critical switchgear area HVAC system is designed to maintain temperatures in the electrical rooms between 55°F and 104°F during normal operation and to limit the temperatures below equipment operability limits during all emergency modes of operation. See Table 3.11-1. The system is also designed to remove any combustible fumes generated by the emergency batteries.

9.4.1.2 System Description

The HVAC systems of the main control room, cable spreading room, and critical switchgear areas are shown in Figure 9.4.1-1 through 9.4.1-3. The HVAC systems for these three areas are located in equipment rooms above the main control room. These two equipment rooms are separated from each other by a missile barrier. Each equipment room houses three separate and independent systems serving the three areas. Equipment details are given in Table 9.4-1. Equipment seismic information is given in Table 3.2-1.

9.4.1.2.1 Main Control Room

Each of the main control room's 100%-capacity HVAC systems are composed of a primary air handling system and an emergency filter system. The two HVAC systems share a common outside air intake system and a common duct distribution system within the main control room. A single exhaust system, composed of a fan, shutoff damper, and ductwork, discharges air from the main control room toilet and kitchen. The exhaust fan operates continuously during normal operations.

Each primary air handling system consists of a centrifugal supply fan which blows through an air handling unit consisting of an air filter, two water cooling coils in series (one normal use coil for radwaste chilled water and one emergency use coil for control room chilled water or SW), and an electric blast coil heater and associated ductwork and dampers.

Separate return air ductwork containing a sound absorber unit is provided from the main control room to each of the primary air handling systems.

During normal operation one air handling system operates, distributing air to the main control room. The temperature is controlled by electronic controllers located in the main control room which modulate the radwaste chilled water flow to the cooling coil.

Chilled water is normally supplied to the main control room air handling systems by the WCH. The WCH, which includes two 100%-capacity chillers and two 100%-capacity pumps is not an

ESF. During emergency conditions, CCH water is supplied to the air handling unit emergency cooling coil for control room cooling. The CCH system is normally in standby alignment for emergency use and is manually initiated. The CCH system is capable of maintaining the control room below the control room habitability design condition of 85ºF which also bounds the 104ºF equipment qualification temperature limit for the control room. SW can be used as an acceptable alternate emergency cooling source when CCH is unavailable and when SW is evaluated as capable of maintaining the bounding 85ºF long term steady state control room temperature.

The two 1000-cfm capacity filter systems are normally in standby and operate in the event of an emergency (F, A, Z signal). Each of the emergency filter systems consists of an emergency filter unit, a 5-kW electric heater, bypass and recirculation control dampers, and associated ductwork. Each emergency filter unit consists of a medium efficiency prefilter, high efficiency particulate air (HEPA) filter, activated charcoal filters, and direct drive centrifugal fan, all enclosed in an all-welded sheet metal housing. A deluge water spray system is provided to soak the charcoal filters in the event of high temperatures in the charcoal beds. Check valves are provided on all drain connections from the filter unit, and the drain header is provided with a deep water seal trap to prevent inleakage of air during unit operation. The electric heater located in the fresh air duct to each emergency filter limits the relative humidity of the air entering the filter to 70%.

The medium efficiency prefilters are provided to protect and extend the life of the HEPA filters. They have an 80% to 85% dust spot efficiency by ASHRAE Standard 52.1 (MERV 13 rating by ASHRAE standard 52.2).

Regulatory Guide 1.52 compliance is described in Section 1.8.

Motor-operated outside air intake (bypass) dampers WMA-AD-51A-1 and 51B-1 are spring-loaded fail-closed type and are provided with limit switches to indicate full open and full closed positions on the main control room panel. Each damper is provided with a remote manual switch in the main control room. Dampers are automatically closed when deenergized by isolation signal or by the main control room panel-mounted switch. These dampers have a design leak rate of 0.5% of the rated flow. Main control room supply fan inlet pressure is higher than the emergency filter unit fan; therefore, when the emergency filter unit is operating, a negative pressure is developed on the inlet side of the bypass dampers preventing any contaminated air bypass of the emergency filter unit. In the event that either bypass damper does not close, an alarm will be activated in the main control room.

The three fresh air intakes (one normal and two remote) for the main control room are fitted with two butterfly isolation valves in series. The normal control room fresh air local intake valves are automatic isolation valves which isolate on an F, A, or Z signal. The normal fresh air intake valves have electrohydraulic operators which are powered from the Class 1E buses. All fresh air intakes are connected via ductwork to a common intake header from which both main control room air handling systems and both emergency filter systems draw fresh air. The isolation valves in the purge lines and the normal air intake and position indication on all fresh

air intakes, the emergency filter units, and the bypass dampers that direct fresh air through the emergency filter units are division oriented electrically.

The remote air intake valves are manual, and the design is simple and reliable enough that the valve may be manually repositioned in a short period of time.

In the event of a LOCA, the main control room is protected from potential airborne radioactivity by pressurizing the control room with air supplied via the remote air intakes. The system operates in the following manner:

The isolation valves in the normal fresh air intake are closed by any of the F, A, or Z signals. These are the same signals provided for isolating the primary and secondary containments.

Both sets of remote air intake isolation valves are normally locked open. At least one air intake must be maintained open to ensure the control room is pressurized.

The two purge exhaust systems each consists of two isolation valves in series. One purge valve is equipped with an electrohydraulic operator and is interlocked with its remote intake valve, and the other purge valve is maintained open.

Both purge exhaust systems utilize battery exhaust fans WEA-FN-53A and WEA-FN-53B (which are both ESF) to purge air from the remote intake headers.

Both battery exhaust fans provide the necessary redundancy through cross over ductwork between each set of purge exhaust valves.

The emergency filter units are energized by F, A, Z signals and all outdoor pressurizing air is automatically diverted through the filter units. The main control room kitchen exhaust fan and its isolation damper are also shut off by F, A, Z signals.

Operating in the above manner ensures that the main control room is continuously pressurized with filtered air. The details of the control room dose analysis are discussed in Sections 15.4.9, 15.6.4, 15.6.5 and 15.7.4.

9.4.1.2.2 Cable Spreading Room

The cable spreading room HVAC system consists of two 100%-capacity air-handling units, each with its own duct distribution system, common distribution system inside the cable spreading room, and one purge exhaust fan. The air handling units are similar to those servicing the main control room, i.e., filter, SW coil, chilled water coil, electric heater, and centrifugal fan in the sheet metal housing. Normally one air handling unit operates continuously on a 100% recirculation mode of operation maintaining the cable spreading room and remote shutdown room at approximately 80°F.

The cable spreading room purge exhaust fan does not normally operate. In the unlikely event of fire developing in the cable spreading room, the purge fan can be manually operated to remove any smoke from the cable spreading room prior to personnel access.

If the radwaste chilled water supply to the cable spreading room air handling units is lost, SW is supplied to the units for emergency cooling. Under this mode of operation the cable spreading room and remote shutdown room temperature is limited below equipment operability limits. See Table 3.11-1.

9.4.1.2.3 Critical Switchgear Area

The switchgear and batteries associated with the redundant emergency electric power systems are located in separate equipment rooms below the cable spreading room. A separate heating and ventilation system is provided for each set of equipment rooms. Ventilation of the emergency chiller area at the 525 ft level is also provided by this system. Each of the two heating and ventilating systems consists of an air handling unit, battery room exhaust fans and associated ductwork and controls. The air handling unit consists of a roughing filter, two water coils in series (one for WCH or plant service water, one for SW), an electric blast coil heater, and a centrifugal fan in a sheet metal housing. The two air handling units have different capacities due to heat load differences between the two sets of rooms. Electric heaters are provided in the ducts supplying air to the battery rooms to maintain temperature in those rooms above 60°F.

Both heating and ventilating systems normally operate continuously during all modes of operation. They are both partial recirculation systems with fresh air provided as makeup for the air exhausted from the battery rooms. The battery rooms are continuously exhausted (no recirculation) to prevent the possible buildup of combustible gases generated by the batteries. During normal operation, either WCH or plant service water is provided to the air handling units as the cooling medium.

Under all emergency modes of operation SW is provided to both units as the cooling medium. The critical switchgear area air handling units also provide the normal and emergency ventilation for the HVAC equipment rooms and the emergency chiller area at the 525 ft level. Temperatures in the HVAC equipment rooms are limited to a range of 55°F to 104°F during normal operation and below equipment operability limits during all emergency modes of operation. See Table 3.11-1.

9.4.1.3 Safety Evaluation

9.4.1.3.1 Main Control Room

The reliability of the HVAC system serving the main control room is achieved by providing two 100% redundant trains. Only one of the two redundant trains is required to operate to provide adequate cooling and dose mitigation. The two HVAC trains are physically separated to preclude simultaneous failure from any one incident. These HVAC trains are cooled

normally by the non-safety related Radwaste Building Chilled Water (WCH) System. During an emergency, the HVAC trains are cooled by the CCH system, or can be cooled by the SW system when CCH is unavailable and the SW is evaluated as capable of the required heat removal. All components of the two HVAC trains and the SW and CCH cooling systems are designed to withstand the effects of a SSE and are powered from emergency diesel buses. The emergency chillers are located in a general area. During initial licensing the emergency chillers were installed as directed in License Condition 2.c.(21) of the Operating License. The emergency chillers were required to be redundant, Seismic Category I, and environmentally qualified.

The CCH system is normally aligned for emergency standby service. The CCH system is manually started post-accident upon a loss of normal control room cooling. Analyses were performed to evaluate control room heat up without cooling, acceptable temperature levels/stay times for operators, and time available to bring cooling back online. The results demonstrated that temperatures would not exceed acceptable limits during manual operation. At no time will the control room exceed the 104ºF equipment qualification temperature limit. Prior to start of the CCH system, the control room may temporarily exceed the steady state habitability temperature of 85ºF but would remain below the National Institute for Occupational Safety and Health wet-bulb globe temperature for unlimited duration habitability (Reference 9.4-1).

The normal fresh air intake is provided with two division oriented valves (normally open, fail closed) in series to close in the event of an F, A, Z signal. The valves are a highly reliable butterfly-type with the disc keyed to the pivot shaft. If one of the remote air intake isolation valves should fail it may be easily repositioned or repaired. One remote intake will always remain open to ensure a pressurized control room and prevent infiltration.

The remote fresh air intakes are used to pressurize the main control room through emergency filter units. This limits infiltration of airborne radioactive contaminants and smoke due to a fire within the plant but external to the control room. Infiltration of airborne radioactivity in the main control room is discussed in Section 6.4.

The emergency filter unit starts operating in the event of a LOCA.

The main control room is maintained at 75 $\pm$3°F dry-bulb temperature under normal conditions. In the event of an emergency, the control room will be cooled by CCH. When CCH is unavailable, SW can be an acceptable alternate cooling source when evaluated as capable of maintaining the bounding 85°F long term steady state control room temperature.

9.4.1.3.2 Cable Spreading Room

The cable spreading room is provided with two 100%-capacity HVAC systems which are physically separated. All components of the two systems, except the chilled water system, are designed to operate through the SSE and are powered from emergency diesel buses. As with the control room HVAC system, SW is used as the cooling water for the cable spreading room

handling units to maintain an acceptable temperature in the cable spreading room for equipment operation in the event that the chilled water system is inoperable.

9.4.1.3.3 Critical Switchgear Area

The essential electric equipment for each of the redundant emergency diesel generators is serviced by separate heating and cooling systems. Each system is powered from a Class 1E bus which is supplied by the diesel generator it serves and is designed to operate through an SSE.

Standby service water is used as the system cooling medium whenever WCH or plant service water are not available, thus ensuring cooling during all modes of plant operation. The two systems are physically separated and arranged in such a manner that the failure of one system can affect only the diesel generator that it services.

9.4.1.4 Testing and Inspection Requirements

The performance of the HVAC systems servicing the main control room, cable spreading room, and critical switchgear areas can be verified while the systems are operating. The operability and performance of standby equipment is determined by alternating the duty of redundant systems.

The control room system ductwork was subject to leak tests during erection and was balanced for air flows in accordance with the procedures of the Associated Air Balance Control Council (AABC). All system components were subject to preoperational testing. All piping systems components were subject to hydrostatic tests during erection.

The emergency filter housings and filters were subject to both shop and field efficiency tests.

The HEPA and charcoal adsorber filters are periodically tested as required by the Technical Specifications. Charcoal samples laboratory test results are required within 31 days of removal.

9.4.1.5 Instrumentation Requirements

All essential controls for the control room, cable spreading room, and critical switchgear area HVAC systems are electric or electronic except the remote air intake isolation valves. Pneumatic controls are used only on nonessential components.

9.4.1.5.1 Main Control Room

The following controls are provided in the main control room in addition to those discussed in Section 9.4.1.2.1.

Both air handling systems serving the main control room can be started from separate selector switches located in the main control room. When an air handling unit fan is started, all

controls associated with that system are energized via electrical interlocks initiating the following operations:

a. The fresh air intake damper is opened, and

b. The electronic thermostat in the main control room modulates the radwaste valve and energizes the two stages of electric heaters, as required, to satisfy the heating/cooling requirements of the main control room. (The heater breakers are normally locked open in modes 1, 2, and 3.)

In the emergency condition (loss of radwaste building chilled water during a design basis accident), the emergency cooling coils in the HVAC air handling units are supplied from the CCH system. The CCH system is manually initiated. The HVAC air handling unit recirculation fans auto-start on a F, A, Z signal. During a LOOP event, the recirculation fan that had been running will restart upon its associated diesel generator start. The control room operator will re-establish control room cooling from the control room, however, local field operation at the CCH chiller is required to load (adjust) the chiller to obtain the required heat removal. No valve manipulations are required to initiate control room cooling using the CCH system when it is maintained in the standby emergency cooling configuration.

Use of the SW system to provide cooling, in lieu of the CCH system, and when evaluated as capable of the required heat removal, requires local valve manipulations to isolate the CCH system supply and align SW to the HVAC air handling unit emergency cooling coil. To support the use of SW, valves SW-V-104C(D) and SW-V-106C(D) on the outlet of the air handling unit emergency cooling coils will be throttled to provide a minimum 125 GPM SW flow rate through the air handling unit coils.

Control switches are provided in the main control room for all fans, local air intake isolation valves, and dampers so that all components can be controlled manually as well as automatically. The remote air intake isolation valves are manual valves.

9.4.1.5.2 Cable Spreading Room

The air handling units serving the cable spreading room are started from separate selector switches located in the main control room. When an air handling unit fan is started, an associated solenoid valve is energized permitting the air handling unit pneumatic chilled water control valve and electric heating coils to receive a pneumatic control signal from a temperature controller sensing temperature in the air return duct from the cable spreading room (the heater breakers are normally locked open in modes 1, 2, and 3). The starting of the fan also energizes the air handling automatic roll filter control circuit permitting the filter drive motor to change media at selected preset timer intervals. Redundant temperature switches located in the cable spreading room will annunciate alarms in the main control room in the event of a temperature rise to 90°F thus alerting the operator of a possible equipment

malfunction. A differential pressure switch across the air handling unit filter will alarm in the event of high differential pressure.

Smoke detectors in the cable spreading room return air ducts annunciate alarms in the main control room in the event of smoke so that the operator can activate the fire protection system (see Appendix F).

There are no control valves associated with the SW coils in the cable spreading room units. Whenever SW is on, there is full water flow through the coil. During normal operation any heat added to the space by the SW coil is compensated for by the air handling units chilled water coil.

9.4.1.5.3 Critical Switchgear Area

The two air handling units and the two battery room exhaust fans which service the critical switchgear area each have their own selector switch located in the main control room. When an air handling unit fan is started, an associated solenoid valve is energized permitting the air handling unit pneumatic plant service water valve and electric heating coils to receive a pneumatic control signal from a temperature controller sensing temperature in the supply air duct to the critical switchgear area. The temperature controller is set to maintain the temperature as described in Table 3.11-1. The starting of the fan also energizes the air handling unit automatic roll filter control circuit, permitting the filter drive motor to change media at selected preset timer intervals.

Temperature switches located in each of the electrical equipment rooms serviced by the critical switchgear system annunciate alarms in the main control room in the event of abnormally high temperatures thus alerting the operator of a possible malfunction of the cooling system. Smoke detectors in the main return air ducts to the air handling unit and in the battery room exhaust ducts will annunciate alarms in the main control room in the event of fire in the switchgear area. Differential pressure switches across each of the battery room exhaust fans and across the filter of the air handling units will annunciate alarms in the main control room in the event of low differential pressure across fan or high/low differential pressure across filter.

As with the cable spreading room air handling units, there are no control valves associated with the SW coils in the switchgear area units. Whenever SW is on, there is full water flow through the coil.

9.4.2 REACTOR BUILDING

9.4.2.1 Design Bases

The reactor building, or secondary containment, is provided with a HVAC system designed to meet the requirements for all general areas of the building, the spent fuel pool, potentially contaminated areas and the primary purge as follows.

a. To provide fresh, tempered, ventilating air to the various spaces in the reactor building in sufficient quantity to limit the temperature during all normal operating conditions and/or during loss of ac power as specified in Table 3.11-1, while providing at least one air change per hour in all areas;

b. To draw air across the surface of the spent fuel pool, reactor well, and dryer/separator pool by exhausting around their perimeters to control temperature and to maintain airborne radioactivity within acceptable levels in these spaces;

c. To provide for controlled air movement from areas of potentially low radiation to areas of potentially high radiation. This serves to isolate and segregate airborne radioactivity which may be released due to equipment failure or malfunction. The system is designed to preclude recirculation of reactor building air under normal operating conditions;

d. To maintain the reactor building during normal operation at a negative pressure of 0.25 in. w.g. with respect to atmosphere as indicated at the reactor building el. 572 ft to minimize release of airborne radioactive material. During emergency operation, the standby gas treatment (SGT) system (see Section 6.5) maintains the reactor building at a negative pressure;

e. Maintain the reactor building equipment drain sumps and headers at a negative pressure with respect to the rest of the reactor building, and provide means to filter the effluent before discharging it to the main reactor building exhaust header so that the release of radioactive contaminants is minimized;

f. Provide means to monitor all effluent from the reactor building prior to release for radioactive contamination and to isolate all ventilation openings in the building in the event that radiation levels so monitored exceed the limits defined in 10 CFR Part 20; and

g. In addition, the reactor building ventilation system is designed to provide for purging of the primary containment. Primary containment purge air is supplied and exhausted by the reactor building ventilation system.

Except for the emergency cooling system which is described in Section 9.4.9, the only portions of the reactor building heating and ventilating system which are designed as ESF are the isolation valves located in the outdoor air intake duct and the exhaust system discharge duct, and the isolation valves on the purge connections to the primary containment. The reactor building isolation valves are designed, manufactured, and N-stamped Class 3 in accordance with Section III of the ASME Boiler and Pressure Vessel (B&PV) Code. The primary containment purge isolation valves are N-stamped Class 2 in accordance with

Section III of the ASME B&PV Code. All isolation valves are Seismic Category I. The means of protecting the system vents and louvers from missiles is discussed in Section 3.5.

9.4.2.2 System Description

The reactor building heating and ventilating system is shown in Figure 9.4-2. The system is basically a "push-pull" heating and ventilation system providing once-through air flow with no recirculation and consists of the following systems:

a. Supply air,
b. Exhaust air,
c. Sump vent exhaust filter,
d. Emergency cooling (described in Section 9.4.9), and
e. Miscellaneous ventilation.

Equipment details are given in Table 9.4-2. Equipment seismic information is given in Table 3.2-1.

9.4.2.2.1 Supply Air System

The supply air consists of a heating and ventilation unit, air distribution ductwork, two isolation butterfly valves on the fresh air intake, and associated controls. The heating and ventilation unit is composed of the following elements in an insulated housing:

a. An automatic roll type prefilter,

b. Steam coils with face and bypass dampers,

c. A capillary type, evaporative cooling section with two 100%-capacity spray pumps, and

d. Two 100%-capacity vaneaxial fans with back draft dampers on the fan discharges.

During normal plant operation and shutdown, the supply air system isolation valves are open and the ventilation system operates continuously distributing tempered, 100% outdoor air throughout the building. One supply fan is normally operating with the second fan in standby. The standby fan starts automatically in the event the operating fan fails. During winter months, the steam coil in the ventilating unit heats the supply air. A second steam booster heater in the supply duct to the refueling floor heats the air to maintain the refueling floor area. (See Table 3.11-1 for temperature limitations.) During summer months, the capillary type air washer cools the incoming air by evaporative cooling. Water for this air washer is supplied from the potable water system (see Section 9.2.4).

The reactor building supply air system also provides makeup air to the primary containment during primary containment purge if needed. During purge, supply air is directed into the primary containment through the isolation valves. The purge supply air flow rate is controlled by an air operated directing damper in the supply system ductwork which is set manually from the main control room. A backdraft damper is provided in this purge line and is counterweighted so that the pressure drop across the backdraft damper in the open position, does not exceed 0.25 in. w.g.

9.4.2.2.2 Exhaust Air System

The reactor building exhaust system draws air from all areas with potential radiation contamination and discharges it to the elevated release point. There are two 100%-capacity vaneaxial fans in the system. One fan normally operates with the second fan in standby.

Approximately one-half of the reactor building exhaust air is drawn from the refueling level of the reactor building. Intake ducts to the exhaust system are embedded around the periphery of the spent fuel pool, dryer/separator pool, and reactor well to remove any potentially radioactive vapors generated in the pools. Volume control dampers in the ducts from each pool are controlled from a local panel in the reactor building to permit the operator to vary the flow over each pool during various fuel handling operations.

Primary containment purge can be performed by discharging the purge air through the reactor building exhaust system or through the SGT system (see Section 6.5). Ducts connect the primary containment drywell and suppression pool area with both systems. The reactor building exhaust system is normally used for purge after the SGT system is used for the first 24 hr. The SGT system is also used when an unacceptably high level of airborne radioactivity is present inside the primary containment.

Radiation monitors are located just outside of the air plenum on the intake side of the two reactor building exhaust fans. In the event that a preset high level limit of radioactivity is exceeded, the radiation monitors will annunciate an alarm in the main control room and transmit an isolation signal to the affected emergency safeguards systems. In the event of an F, A, or Z signal, the reactor building exhaust fans stop and the isolation valves close. All isolation signals which stop and isolate the reactor building exhaust system also start the SGT system (see Section 6.5.1).

9.4.2.2.3 Sump Vent Exhaust Filter System

All potentially radioactive leaks and/or spills in the reactor building are channeled to the equipment and/or floor drain systems. To minimize the release of radioactive contaminants from the building, the drain system sumps and drain headers are maintained at a negative pressure and vented through a filter system. The sump vent exhaust system is composed of

two, full-capacity, filter units which draw air from the sumps and drain headers and pass it through filters, a moisture separator, and electric heater before discharge to the main reactor building exhaust system upstream of the radiation monitors.

Each filter unit consists of the following elements in a sheet metal housing:

a. A moisture separator to remove entrained moisture,

b. An electric blast coil heater to limit the relative humidity of the air entering the filter to 70%,

c. A medium efficiency particulate prefilter,

d. A HEPA filter,

e. A tray type, 2-in.-thick activated charcoal filter, and

f. A centrifugal fan.

All filters in the sump vent exhaust units are designed to satisfy the same efficiency requirements as those of the control room emergency filter units outlined in Section 9.4.1.2.1. One filter unit operates continuously during normal plant operation. The standby unit is started from the main control room in the event that the fan of the operating unit fails. Neither unit operates in the event of a reactor building isolation signal. Deluge fire protection is provided for each filter unit (see Appendix F).

9.4.2.2.4 Miscellaneous Area Ventilation Systems

The following miscellaneous HVAC systems are provided to service local areas in the reactor building:

a. The main steam tunnel is serviced by three fan coil units located within the tunnel. Three fan coil units are composed of a water cooling coil supplied by the plant service water system and a direct drive centrifugal fan in a sheet metal housing. Two fan coil units normally operate continuously in the recirculation mode to remove heat generated by the steam piping in the tunnel. Two fan coil units operating has sufficient capacity to limit the temperature in the tunnel to 130°F with one fan coil unit in standby.

b. The reactor water cleanup (RWCU) sample hood is provided with an exhaust filter unit which is operated whenever a sample is taken. The hood is of the air curtain type with supply air to the hood provided from the reactor building supply air system. An electric duct heater is provided in the supply air duct to

temper the air into the hood to 70°F. The exhaust filter unit, which draws air from the hood, is composed of a medium efficiency prefilter, a HEPA filter, and a centrifugal fan in a sheet metal housing. The exhaust fan discharges air into the reactor building exhaust system upstream of the radiation monitors.

c. The vehicle air lock (railroad bay), on grade elevation, is heated and cooled by an air handling unit which operates in a 100% recirculation mode. The air handling unit is composed of a prefilter, water cooling coil, and centrifugal fan in a sheet metal housing. A 15-kW electric blast coil heater is provided in the unit discharge duct for heating. Plant service water is supplied to the water coil for cooling.

During periods when the large railroad lock door (R106) is open for operations associated with the Independent Spent Fuel Storage Installation (ISFSI), or other activities requiring the door to be open for an extended period, engineered features are available to maintain the railroad lock at temperate conditions. Eight thermostatically controlled heaters are installed near the door, and an air curtain is installed above the door. These supplemental heaters, used in conjunction with the air curtain, keep the railroad lock warm during winter conditions when the door is open.

9.4.2.3 Safety Evaluation

The following safety features are incorporated in the design of the reactor building ventilation system:

a. The air distribution within the building provides for controlled air movement from areas of potentially low radiation to areas of potentially high radiation. Under normal operating conditions, recirculation of contaminated air is precluded by system design.

b. There are only two penetrations of the reactor building associated with the building ventilation system. Two butterfly valves in series are provided in the duct connections to each of these ventilation openings. The four valves close, isolating the reactor building, and the ventilation system fans stop in the event of any of the F, A, Z isolation signals.

The redundant, fail-closed valves on each ventilation opening ensure reactor building isolation in the event of failure of any one valve.

Two fail-closed, air-operated isolation valves, in series, are also provided on all purge connections to the primary containment. These valves are open only

during primary containment purge operations and close automatically in the event of any of the above isolation signals.

c. The reactor building is maintained at a negative pressure of 0.25 in. w.g. with respect to atmosphere by differential pressure controllers which position the blade settings of the exhaust fans. This atmospheric control limits the exfiltration of radioactive contaminants from secondary containment. See Section 6.5.1 for emergency operation of the SGT system which maintains the reactor building at a negative pressure under postulated accident conditions. Each set of main supply and exhaust fans are powered from different divisions of the Class 1E power supply.

d. Radiation monitors, located just outside of the exhaust air discharge plenum, monitor exhaust air discharged from the building and transmit an isolation signal in the event that the radiation level exceeds a preset level. See Chapter 11 for further discussion of radiation monitoring.

e. The equipment drain system sumps and headers are vented through two 100%-capacity filter units. This operation minimizes the release of radioactive material during normal plant operation. Two 100%-capacity redundant filter trains ensures continuous system operation in the event of any single component failure.

f. Each ventilation header with embedded exhaust duct connections around the spent fuel pool, reactor well and dryer/separator pool is equipped with a flow transmitter and flow indicator to ensure that the designed quantity of air is being exhausted for proper airborne contamination control. See Figure 9.4-2.

9.4.2.4 Testing and Inspection Requirements

The performance of the HVAC systems servicing the reactor building can be verified while the systems are operating. The operability of standby equipment is determined by rotating the duty of the redundant components.

The performance of those portions of the exhaust system which serves the fuel pool can be verified by measuring air flow in the fuel pool exhaust system exhaust header. A damper located in the fuel pool exhaust header controls this air flow. The flow indicator and damper controller are mounted on a local panel in the reactor building.

All system ductwork was balanced for air flows in accordance with procedures of the AABC. All system components were subject to preoperational testing to verify that the system functions in accordance with the design requirements. All piping systems and components were subject to hydrostatic and/or pressure tests during erection. Primary containment purge

system isolation valves are normally closed and are leak tested in accordance with the Technical Specifications.

The sump vent exhaust system filter housings and filters were subject to both shop and field efficiency tests. The HEPA filters are given in-place DOP tests in accordance with ANSI N510-1980, "Testing of Nuclear Air Cleaning System." Filters are tested at rated flow with an acceptance limit of less than 0.05% penetration at rated flow. Charcoal adsorber filters are leak tested in accordance with ANSI N510-1980 to ensure that filter bypass is less than 0.05% of full flow.

9.4.2.5 Instrumentation Requirements

The following are the major instrumentation devices used for controlling the reactor building heating and ventilation system:

a. Isolation valve control

The isolation valves on the purge lines to the primary containment and the reactor building supply air intake and exhaust air discharge ducts are controlled by individual OPEN-AUTO-CLOSE selector switches located in the main control room. The switch springs back to AUTO from either the OPEN or CLOSE position. With the selector switch in the AUTO position, an isolation signal will deenergize the solenoid and close the isolation valve. The isolation valves are designed to fail in the closed position in the event of loss of control air.

b. Supply ventilation unit fan control

Selector switches, with indicating lights, are provided in the main control room for the two supply ventilation unit fans.

A differential pressure switch, with probes on either side of the fan/damper assembly, will automatically start the standby fan in the event of low differential pressure which is indicative of fan failure. The differential pressure switch will also annunciate an alarm in the main control room.

In the event of an isolation signal, both supply fans are stopped automatically via electric interlocks.

c. Main exhaust system fans

The two main exhaust fans are controlled by selector switches located in the main control room. When one fan is started, an associated solenoid valve is

energized causing the pneumatic, fail-closed damper on the fan discharge to receive control air and open. A differential pressure switch, with probes on either side of the fan/damper assembly, will start the standby fan in the event of low differential pressure which is indicative of fan or damper failure.

The reactor building is maintained at a negative pressure of 0.25 in. w.g. with respect to atmosphere by automatically varying the pitch of the main exhaust fan blades, thereby changing fan capacity, via a pneumatic controller. There is an electronic differential pressure sensor across each of the reactor building's four exterior walls. The lowest of the four signals is transmitted to a differential pressure controller which transmits a signal, converted to a pneumatic signal, to the pneumatic fan blade controller to maintain the lowest differential pressure at the selected setpoint.

In the event of an isolation signal, both exhaust fans are stopped via electric interlocks.

d. Primary containment purge control

When the primary containment is purged to the reactor building exhaust system, the following operations are performed:

The primary containment purge exhaust isolation valves and the valve connecting the purge exhaust header to the reactor building exhaust system are opened via individual selector switches located in the main control room.

A pneumatic volume damper in the purge line to the exhaust system is controlled by an adjustable differential pressure controller. The pressure is sensed between the ductwork connecting the primary containment and the reactor building. The differential pressure controller is located in the main control room. The primary containment is depressurized, if required, by slowly lowering the setpoint of the differential pressure controller thus gradually opening the damper. Flow indication of purge exhaust is provided in the main control room so that depressurization can be performed at a controlled rate.

Once the containment is depressurized, the isolation valves on the supply purge connection to the containment are opened via selector switches in the main control room. Pneumatic dampers in the supply system, which divert supply air into the purge supply header, are used for purge rate control. When the valve in the supply line to the supply purge header is opened, an associated solenoid valve is energized permitting the diverting damper to receive a control signal. The control signal is transmitted from an adjustable flow controller located in the main control room, which will modulate the damper as required to maintain

the purge supply rate at the controller setpoint. Purge flow is adjustable up to 10,500 cfm.

Normally the primary containment drywell and suppression pool area are purged separately by opening the appropriate isolation valves. In the event of an isolation signal during purge, all isolation valves are automatically closed.

e. Sump vent exhaust system control

Selector switches with running lights are provided for each sump vent exhaust unit. When a unit fan is started, the control circuit for the unit is energized causing the electric blast coil heater to start and a damper control solenoid valve to energize. When energized, the solenoid valve permits the pneumatic volume damper on the unit fan discharge to receive a control signal from a differential pressure controller set to maintain a flow of 1000 cfm through the unit.

The drain system main exhaust header from which the filter unit draws is maintained at a negative pressure of approximately 1.0 in. w.g. with respect to the reactor building atmosphere. A volume control damper, located between the exhaust header and reactor building atmosphere, is modulated by a differential pressure controller set to maintain that pressure differential.

In the event that the operating sump exhaust unit fails, a differential pressure switch with probes set across the unit filters will annunciate an alarm in the main control room, thus alerting the operator to start the standby unit. The differential pressure switch also deenergizes the units electric heater.

A thermocouple on the charcoal filter will annunciate an alarm in the main control room on a temperature rise to 250°F.

f. Heating control

Supply air is heated in the supply ventilation unit by a steam coil with pneumatic face and bypass dampers. The source of the heating steam (HS) is from the gland steam evaporator during turbine generator operation and from the auxiliary boiler during shutdown. The dampers are controlled by a temperature controller which senses supply air temperature downstream of the fans. The setpoint of the temperature controller is adjustable. A temperature switch with a sensor in the outdoor air intake energizes a solenoid valve, thus causing the steam shutoff valve in the feed line to the steam coil to open whenever the outdoor temperature drops below the setpoint.

The steam booster heater in the supply duct to the refueling floor is controlled in a similar manner to that of the main ventilation unit and is supplied HS from the same sources that supply the main unit. Face and bypass dampers on the booster heater are modulated by an adjustable, area mounted, temperature controller.

g. Evaporative cooler control

The supply ventilation unit evaporative cooler (air washer) section is controlled by temperature switches with sensors located in the outdoor air intake.

9.4.3 RADWASTE BUILDING

9.4.3.1 Design Bases

The radwaste building houses the solid, liquid, and gaseous radwaste treatment systems. The HVAC systems serving the radwaste building are designed to satisfy the following requirements:

a. To provide fresh tempered ventilation air to the various spaces in the radwaste building in sufficient quantity to limit the temperature as specified in Table 3.11-1, while providing at least three air changes per hour in potentially contaminated areas. Additionally, areas in which personnel will spend extended periods of time performing sensitive operations are air conditioned for personnel comfort;

b. The air distribution within the building provides for controlled air movement from areas of low radiation contamination potential to areas of progressively higher radiation contamination potential;

c. To filter the exhaust air from the building before discharging it to the atmosphere to limit the release of airborne radioactive particulates;

d. To heat the supply air as required during the winter season to maintain minimum temperatures as specified in Table 3.11-1; and

e. To maintain the lower level of the radwaste building at a negative pressure with respect to atmosphere to minimize the release of radioactivity.

9.4.3.2 System Description

The radwaste building HVAC system is shown in Figure 9.4-3. The main system is a push-pull heating and ventilating system providing once-through air flow with no recirculation.

In addition, individual air conditioning units are provided for all rooms which personnel will normally occupy for extended periods of time. Equipment details are given in Table 9.4-3. Equipment seismic information is given in Table 3.2-1.

The main radwaste building supply air system consists of a supply ventilation unit and distribution ductwork. The supply ventilation unit consists of an insulated steel cabinet housing a prefilter, steam coil with face and bypass dampers, an evaporative cooling section, and two 100%-capacity centrifugal fans. The prefilter is of the renewable roll type, automatically progressed to maintain uniform pressure drop. The steam coil is of the nonfreeze type with automatic face and bypass dampers for temperature control. The evaporative cooling section is of the capillary type with two full-capacity pumps with common suction from the washer basin and common discharge into the spray header system. Makeup water to the evaporative cooler is supplied from the plant potable water system.

During normal plant operation the supply unit operates continuously, providing tempered air throughout the building via the supply duct distribution system. The radwaste building supply system has no safety functions and will be inoperative in the event of loss of offsite power.

The radwaste building exhaust system is composed of three 50%-capacity exhaust filter units. Each exhaust unit consists of medium efficiency prefilters, HEPA filters, and a centrifugal fan in a sheet metal housing. The prefilters are of the cartridge type with a minimum Dust Spot Efficiency of 80%-85% by ASHRAE standard 52.1 (MERV 13 rating by ASHRAE standard 52.2). The HEPA filters are designed for removal of fine airborne particulates. These filters are of water repellent and fire-resistant construction for operation at temperatures up to 300°F. The HEPA filter has a minimum efficiency of 99.97% on a 0.3 m DOP test. The HEPA filters are fabricated in accordance with MIL-F-51068C, MIL-STD-282, and carry a UL label certifying compliance with UL586.

Each exhaust unit fan is provided with an automatic air-operated inlet vane for flow control. The inlet vanes are controlled by differential pressure controllers set to maintain the tank enclosures in the lower level of the radwaste building at a negative pressure with respect to atmosphere.

During normal plant operation two exhaust units operate, with the third unit in standby, drawing air from a common exhaust duct system and discharging the air above the radwaste building roof. All radwaste building exhaust air is processed by the exhaust units and monitored by radiation detectors prior to discharge. Radioactive releases to the environment are discussed in Section 11.3.3. The radiation monitoring system is discussed in Section 11.5.2.2.1.7 with arrangement details shown in Figure 11.5-7. The exhaust duct system is arranged in such a manner that all exhaust is drawn from areas with the highest radioactive contamination potential thus inducing air flow from clean areas into the potentially contaminated zones. Where applicable, automatic volume dampers are provided in ventilation openings in walls between clean and potentially contaminated areas. The volume dampers are

controlled by differential pressure controllers, with probes on either side of the vent opening, to maintain "hot zones" at a negative pressure with respect to "clean zones."

The radwaste control room, instrument shop, radiochemical laboratory, sample room, counting room, and health physics area are provided with air conditioning systems to maintain suitable conditions for personnel comfort. All areas except the radwaste control room are serviced by once-through air conditioning systems. The radwaste control room, which has no contamination potential, has a partial recirculation air conditioning system.

The air conditioning for each area is provided by air handling units which draw air from the radwaste building supply air system, pass it through filters, chilled water coils, and electric heaters, and discharge it into the rooms being conditioned. Chilled water is supplied to the coils from the WCH.

The conditioned air leaves the rooms by exfiltration to the rest of the building or, as in case of radiochemistry laboratory, hot instrument shop and sample room, through exhaust hoods which discharge into the main exhaust system. The exhaust hoods in the radiochemistry laboratory, hot instrument shop and sample room are provided with local filter units composed of prefilters, HEPA filters, and fans to remove radioactive particulates at the hoods prior to discharge into the exhaust system. These HEPA filters are similar to those in the main exhaust filter units.

Effluent from the radwaste building ventilation is continuously monitored for gaseous activity and continuously sampled for laboratory analysis of particulate radioactivity. The sampling and monitoring system is described in Section 11.5.2.2.3.

9.4.3.3 Safety Evaluation

The radwaste building HVAC system is not required for a safe shutdown of the plant; however, the following features are incorporated in its design to ensure system reliability and to minimize the uncontrolled release of airborne radioactive contaminants during normal plant operation:

a. The 50% standby capacity of the exhaust filter system ensures full system capacity with any unit inoperative due to equipment failure or maintenance outage,

b. Redundant supply fans ensure supply system operation in the event of single fan failure,

c. All exhaust air is passed through HEPA filters prior to discharge thus minimizing the release of radioactive contaminants, and

d. The potentially contaminated area is maintained at a negative pressure and all air is monitored by radiation detectors prior to discharge to ensure against release of radioactive contaminants.

9.4.3.4 Testing and Inspection Requirements

The performance of the HVAC systems servicing the radwaste building can be verified while the systems are operating. The operability and performance of standby equipment is determined by rotating the duty of redundant components. Pressure, temperature, and flow instrumentation is provided as shown in Figure 9.4-3.

The HEPA filters in the radwaste building exhaust filter units are subject to both shop and field efficiency tests. On installation, and periodically thereafter, HEPA filters are given in-place DOP tests in accordance with ANSI N510-1980, "Testing of Nuclear Air Cleaning System." Filters are field tested at rated flow with an acceptance limit of less than 0.05% penetration.

All system ductwork was balanced for air flows in accordance with the procedures of the AABC. All system components were subject to preoperational testing to verify that the system functions in accordance with the design requirements.

9.4.4 RADWASTE BUILDING CHILLED WATER SYSTEM

9.4.4.1 Design Bases

The WCH is designed to provide a reliable source of chilled water to the main control room air handling units, the cable spreading room air handling units, the switchgear area air handling units, and the air handling units serving the conditioned areas of the radwaste building (see Sections 9.4.1 and 9.4.3).

The temperature of the chilled water supplied to the air handling units is maintained between 44°F and 55°.

9.4.4.2 System Description

The WCH is shown in Figure 9.4-4. It is a closed loop system incorporating two 100%-capacity pumps and two 100%-capacity water chillers. The chillers are arranged to operate independently with bypass and shutoff valves provided for ease of maintenance. During normal operation, either chiller operates to maintain the chilled water supplied to the air handling units between 44°F and 55°F. The two chilled water pumps are arranged in parallel with one normally operating and one in standby. The liquid chillers are each rated at 150 tons refrigeration capacity. Each consists of a compressor, evaporator, water-cooled condenser, and controls. Condenser cooling water is supplied to the chillers from the plant service water system (see Section 9.2.1).

An air separator, expansion tank, chemical feed tank, and appropriate valves and piping connections are provided at the common suction to the two pumps for system control. Makeup water to the system is supplied from the plant potable water system (see Section 9.2.4).

9.4.4.3 Safety Evaluation

The WCH has no safety function; however, redundant circulating pumps and liquid chillers are incorporated in the design to ensure uninterrupted system operation during normal plant operation.

All components of the chilled water system are designed to Seismic Category II requirements.

9.4.4.4 Testing and Inspection Requirements

The performance of the WCH can be verified while the system is operating. The functionality of standby equipment is determined by rotating the duty of redundant components. Pressure, temperature, and flow instrumentation is provided as shown in Figure 9.4-4.

9.4.4.5 Instrumentation Requirements

Each of the two chilled water pumps are controlled locally. When either pump is energized, the chiller control circuit is energized via electrical interlocks. If the operating chilled water pump fails, a pressure switch on the pump discharge will start the standby pump after a delay and an alarm will be actuated in the main control room.

Each chiller has a temperature sensing element in the chilled water supply line which controls the chiller capacity to maintain the required temperature.

A single trouble alarm is actuated in the control room to alert operators upon chilled water low temperature, high condenser temperature, or high motor temperature.

9.4.5 OFFGAS CHARCOAL ADSORBER VAULT REFRIGERATION SYSTEM

The offgas charcoal adsorber vault refrigeration system has been permanently deactivated in-place.

9.4.6 TURBINE GENERATOR BUILDING

9.4.6.1 Design Bases

The turbine generator building is provided with HVAC systems designed to satisfy the following requirements.

a. Provide fresh, tempered, filtered ventilating air to the various spaces within the turbine generator building in sufficient quantity to limit the temperatures as specified in Table 3.11-1;

b. Provide for controlled air movement from areas of potentially lower airborne radiation contamination to areas of progressively higher airborne radiation contamination potential. This distribution serves to limit airborne contaminants from migrating from potentially contaminated areas into clean areas. The ventilation systems operate on a once-through basis without recirculation;

c. Monitor exhaust air from the building for radioactive contaminants, prior to discharge, to ensure that the release of contaminants does not exceed the concentration limits defined in 10 CFR 20;

d. Maintain the turbine generator building potentially radioactive areas at a negative pressure with respect to atmosphere to minimize the release of radioactive contaminants;

e. Automatically provide combustion air for the auxiliary boiler in the turbine generator building;

f. Provide ventilation air to the makeup water pump transformers in the turbine building, this portion of the ventilation system is to remain operable through a design basis tornado; and

g. Provide the sample room exhaust hood with a supply and exhaust filtration system and to provide tempered ventilation air to the sample room.

The components of the turbine generator building ventilation systems are classified Seismic Category II. The system fans are constructed and rated in accordance with the applicable AMCA standards.

9.4.6.2 System Description

The HVAC systems of the turbine generator building are shown in Figure 9.4-6. The primary system is a "push-pull" heating and ventilating system consisting of the following systems:

a. Main supply,
b. Main exhaust,
c. Auxiliary boiler room ventilation,
d. Transformer vault ventilation, and
e. Sample room air conditioning.

Equipment details are given in Table 9.4-4. Equipment seismic information is given in Table 3.2-1.

9.4.6.2.1 Main Supply System

The turbine generator building supply air system consists of four supply ventilation units and associated distribution ductwork. The units are operated in pairs, with one pair discharging into a common supply duct system servicing the west side of the building and the other pair discharging into a common supply duct system servicing the east side of the building.

Each of the four ventilation units consists of a prefilter, a steam coil with face and bypass dampers, an evaporative cooling section, and a centrifugal fan enclosed in an insulated housing. The prefilters are of the renewable roll type, automatically progressed to maintain uniform pressure drop. The steam coil is of the nonfreeze type with automatic face and bypass dampers used for temperature control. The evaporative cooling section is of the capillary air washer type with two full capacity pumps which have a common suction line from the washer basin and common discharge line into the washer spray healer system. Makeup water to the air washer is supplied from the plant potable water system.

The centrifugal fans of each ventilation unit have automatic inlet vanes for fan capacity control and are used to vary supply air flow to maintain the turbine building at a set pressure with respect to outdoors. The fan intake ducts of each pair of ventilation units are joined by means of a manual damper so that a single fan can draw air through both ventilation units in the event of failure of one fan. Automatic dampers are provided on the intake of each supply fan which can be controlled from the local panel.

9.4.6.2.2 Main Exhaust System

The main exhaust system consists of four roof-mounted centrifugal fans which draw air from a central exhaust plenum. Three of the exhaust fans normally operate continuously with one fan in standby. During the winter, if the temperature in the turbine generator building can be maintained within the design limit, two of the exhaust fans can be operated.

Almost all exhaust air is drawn from the shielded areas of the turbine building, where the potential for airborne radioactive contamination is highest, thus inducing flow from the less contaminated areas through the shielded areas. The air in the exhaust duct is monitored for radioactive contaminants by a recorder in the main control room. Radioactive releases to the environment are discussed in Section 11.3.3.

In the event that supply air to the turbine generator building is reduced, as during a plant outage, only one or two exhaust fans may be operated. Motor-operated shutoff dampers are provided in the main branches of the exhaust duct system so that exhaust can be stopped on an area-by-area basis. Automatic volume dampers are provided in the exhaust system so that full exhaust flow can be drawn from the shielded equipment vaults on the lower level of the turbine building when the exhaust system is operating at reduced capacity. These vaults house equipment with higher contamination potential such as the air ejectors and the offgas system hydrogen recombiners.

9.4.6.2.3 Auxiliary Boiler Room Ventilation System

The auxiliary boiler room, which is located in the lower level of the turbine generator building, is normally ventilated from the turbine generator building supply air system. This ventilation rate is sufficient when the boiler is not operating. However, when the boiler is operating and drawing combustion air from the room, additional ventilation is supplied to the boiler room by a separate air handling unit. This air handling unit starts automatically, via electrical interlocks, when the boiler is started and draws 100% outdoor air through a weather louver, heats it as required, and discharges it into the room. Part of this air is drawn by the boiler as combustion air, with the balance of the air leaving the boiler room via relief dampers in the exterior wall of the boiler room.

9.4.6.2.4 Transformer Vault Ventilation System

Two transformers, located in adjacent equipment vaults in the lower level of the turbine generator building, must remain operational in the event of a design basis tornado. The power feeds of the makeup water pumps, which are the source of makeup water to the emergency spray ponds, are drawn from these transformers which can be fed from the emergency diesel generator buses. Two tube-axial fans are provided for the ventilation of the vaults in the event of a tornado. The two fans exhaust air from the vaults with makeup air provided through ventilation openings in the vaults walls. Either fan has sufficient capacity to remove the heat generated by the transformers and both are powered from the emergency diesel generator buses. During normal plant operation, makeup air to the vaults is provided by the main turbine generator building supply air system with one vault ventilation fan operating and other in standby.

9.4.6.2.5 Sample Room Air Conditioning System

The turbine building sample room located on the lower level of the turbine generator building is provided with a sample hood exhaust filter system and a self-contained air conditioning system. The sample room hood is of the air curtain type with air supplied to the hood by a centrifugal fan which draws air from the corridor outside the sample room and from the room itself. Air is exhausted from the hood by a filter unit. This unit is composed of a medium efficiency prefilter, a HEPA filter, and an exhaust fan in a sheet metal housing. The filter unit discharges into the main turbine building exhaust system.

9.4.6.3 Safety Evaluation

The transformer vault ventilation system is designed to operate in the event of a design basis tornado. Two full-capacity fans powered from the emergency diesel buses are provided to ensure system operation in the event of a single active component failure. The vaults, which house the ventilation fans as well as the transformers, are designed to withstand the effects of the design basis tornado.

The following features are incorporated in the design of the turbine generator building HVAC system to ensure system reliability and to control air movement from the potentially contaminated areas:

a. Standby exhaust fan capacity is provided (three of four fans operating) to ensure full system capacity in the event of a single fan failure,

b. The supply system ventilation units are designed with cross ties between fans to minimize the effect of a fan failure on system capacity,

c. The building air is monitored by radiation monitoring system sampling from the exhaust ductwork, and

d. Exhaust air is drawn from within the shielded areas of the turbine generator building thus inducing air flow from “clean” areas to areas of potential airborne contamination.

The radiological considerations of normal system operation are evaluated in Chapters 11 and 12.

9.4.6.4 Testing and Inspection Requirements

The performance of the HVAC systems serving the turbine generator building can be verified while the systems are operating. The operability and performance of standby equipment is

determined by rotating the duty of redundant components. Pressure, temperature, and flow instrumentation is provided, as shown in Figure 9.4-6, to monitor system performance.

All system ductwork was balanced for air flows in accordance with the procedures of the AABC. All system components were subject to preoperational testing to verify that the system functions in accordance with the design requirements.

9.4.6.5 Instrumentation Requirements

Control devices for the turbine generator building HVAC system are mounted on racks in unshielded areas of the building. The following major instrumentation devices are used for the turbine generator building HVAC system:

a. Main supply system: The inlet vortex damper on each supply fan is automatically controlled by a differential pressure controller and transmitter, which sense the pressure inside the turbine building relative to outside the building. The differential pressure controller can maintain a differential pressure from approximately -0.25-in. w.g. to +0.25-in. w.g.

b. Auxiliary boiler room ventilation system: The unit is automatically started, via electrical interlocks, when the boiler is started.

c. Transformer vault ventilation system: The two transformer vault fans are controlled by locally mounted selector switches. One unit normally operates continuously with the second unit in standby. In the event of operating fan failure, a pressure switch on the fan discharge will annunciate an alarm and start the standby fan.

9.4.7 EMERGENCY DIESEL GENERATOR BUILDING

9.4.7.1 Design Bases

Each of the three diesel generator rooms is serviced by a separate HVAC system. With the exception of the fuel oil day tank room and the oil pump room exhaust fans, the function of the three systems is to maintain suitable temperatures within the rooms for equipment operation. The exhaust fans provided in each of the three oil pump rooms and in the three day tank rooms prevent the buildup of oil fumes.

All three HVAC systems operate automatically to maintain ambient temperature below equipment operability limits during all emergency modes of operation (see Table 3.11-1) for the various locations in the diesel generator building. Electric heaters are designed to maintain diesel generator rooms above the minimum required for reliable equipment operation (down to the design low of 0°F) and may be supplemented as necessary by other means (down to the

extreme low of -27°F). The high-pressure core spray (HPCS) diesel generator batteries will be maintained at a temperature of 60°F or greater by the HVAC system and supplemented as necessary by portable heaters or other means.

Since an independent and separate diesel generator HVAC system serves each diesel generator, a failure in one system will not effect the operational function of the other systems. The HVAC systems are housed in separate rooms in the Seismic Category I diesel generator building. The means of protecting system vents and louvers from missiles is discussed in Section 3.5.

All system components (except the electric unit heaters, the intake filters, the day tank room exhaust fans, and the fuel oil pump room exhaust fans) are Seismic Category I. The system fans are constructed and rated in accordance with applicable AMCA standards.

9.4.7.2 System Description

The three similar heating and ventilating systems serving the diesel generator rooms are shown in Figure 9.4-7.

Each room has a main "push-pull" ventilation system and an exhaust system for each oil day tank room. Each diesel fuel pump room is served by its own independent ventilation system. Equipment details are given in Table 9.4-5. Equipment seismic information is given in Table 3.2-1.

Each "push-pull" ventilation system is composed of two air handling units, an exhaust fan, associated ductwork, and controls. The two air handling units share a fresh air intake plenum and a common intake air filter bank. Each air handling unit has a water cooling coil (with a bypass damper) and a centrifugal fan in a sheet metal housing. The exhaust fan is a direct drive, vaneaxial fan.

Normally, the smaller of the two air handling units operates continuously to maintain proper temperatures in the diesel generator room. Heating is provided by an electric blast coil heater located in the air handling unit discharge duct. Ambient temperature control is provided by temperature regulated proportional dampers on the air handling unit intake which mix outside air and recirculated room air.

When a diesel generator is started, the larger air handling unit and the main exhaust fan automatically start, and SW is supplied to the water cooling coils in both air handling units. The exhaust fan ductwork is arranged such that the exhaust air can be discharged outside (via the pipe area) or recirculated through the two air handling units in any proportion from 0% to 100% to control supply air temperature. The water cooling coils provide additional cooling during high outdoor air temperatures.

The fuel oil day tank exhaust fans and the fuel oil pump room exhaust fans operate to purge oil fumes from the rooms. An outside air intake louver is provided in each oil pump room. The oil pump exhaust fan discharges to the atmosphere. The explosion-proof electric unit heaters in the pump rooms will maintain the temperature above 50°F.

9.4.7.3 Safety Evaluation

Components of the three emergency diesel generators are serviced by separate and independent HVAC systems. Each HVAC system is powered from a Class 1E bus which is supplied by the diesel generator it serves. All components of each system are located within the equipment room it serves and are therefore protected from all external missiles. All HVAC components required to ensure emergency diesel generator operation are Seismic Category I and Quality Class I.

The HVAC system is started automatically, via electric interlocks, whenever the associated diesel generator is started. Failure of part of any of the three systems will only effect the diesel served and will not impair the operational function of the remaining two systems. These systems are designed to operate in the event of a LOCA coincident with loss of offsite power.

9.4.7.4 Testing and Inspection Requirements

The diesel generators are normally on standby with the ventilation system equipment accessible for out-of-service inspection. All system ductwork was balanced for air flows in accordance with the procedures of AABC. All system components were subject to preoperational testing to verify that the system functions in accordance with the design requirements. All piping system components were subject to hydrostatic tests during erection.

The performance of the heating and ventilation system components are verified while the system is in operation. The performance of standby components are verified during Technical Specifications required testing of the diesel generators. Temperature and pressure instrumentation are provided as shown in Figure 9.4-7.

9.4.7.5 Instrumentation Requirements

The following is a discussion of the instrumentation provided for each of the three emergency diesel generator room HVAC systems.

The smaller air handling unit in each room is controlled by a local rack-mounted ON-OFF switch. In the ON position, the fan operates and the control circuits of all associated equipment are energized causing the following:

a. Electric duct heater control circuit is energized permitting the heater to operate, to satisfy the electric heating thermostat. (Heaters can only operate when the differential pressure switch across the air handling unit fan indicates air flow);

b. Fresh air/recirculation air damper control circuit permitting the electronic temperature controller to proportion air to maintain a proper supply air temperature (100% outdoor air supplied when outdoor temperature is above the damper motor controller setpoint). A sensor located in the supply air duct upstream of the heating unit signals the temperature of the supply air to the damper control; and

c. A motor-operated face and bypass damper on the air handling unit water cooling coil is controlled by a temperature switch located in the fresh air intake. When the fresh air temperature falls below the damper motor controller setpoint, the air is bypassed over the cooling coil to prevent the supply air temperature from dropping below the setpoint temperature.

The larger air handling unit fan and the main exhaust fan are controlled by separate local rack-mounted ON-OFF-AUTO switches. Both unit switches are normally in the AUTO position and are started automatically, via electric interlocks, whenever the associated diesel generator is started. The control circuits for the dampers associated with the larger air handling unit are energized when the fan is started and operated in the same manner as those of the smaller air handling unit.

The oil day tank room and fuel oil pump room exhaust fans are all controlled by local rack mounted ON-OFF switches. The explosion proof electric unit heaters are controlled by local ON-OFF switches. In the ON position, the heaters are cycled on and off by electric room thermostats.

Differential pressure switches are installed across all fans serving the diesel generator rooms. In the event of low differential pressure, an alarm is annunciated in the main control room and/or on local panels. Temperature sensors in the diesel generator rooms and in the exhaust ducts also annunciate alarms in the event of abnormally high or low temperatures (see Figure 9.4-7).

9.4.8 DIESEL GENERATOR AREA CABLE COOLING SYSTEM

9.4.8.1 Design Bases

The critical electric cabling which runs between the emergency diesel generators and the main control room and critical switchgear room is routed in corridors adjacent to the diesel generator building and in corridors between the reactor building and radwaste building. These corridors are normally ventilated by the turbine building and radwaste building ventilation

systems with normal ambient temperatures below 115°F (except for corridor C-121 below 104°F); however, an emergency cable cooling ventilation system is provided to ensure that ambient temperatures in the corridors do not exceed the ambient environmental temperatures for which the cables are rated, in the event of loss of offsite power. During an extreme winter outside temperature of -27°F, the incoming air is heated to a minimum temperature of 35°F.

The ventilation system is comprised of two independent and separate systems which cool Division 1 and Division 2 cable areas. A failure in one system will not effect the operational functions of the other cooling system.

The fresh air intake opening is located in the south exterior wall and is shielded by a concrete barrier which would preclude entry by a missile such as generated by a tornado. Division 1 exhaust fan discharges air into a cable chase which is not open to the atmosphere. The air is removed by the radwaste building exhaust system.

All components in the system are Seismic Category I, Quality Class I. The system fans are constructed and rated in accordance with AMCA standards.

9.4.8.2 System Description

The cable cooling system is shown in Figure 9.4-7. The system is composed of one exhaust fan powered from the Division 1 emergency power bus and one supply air handling unit powered from the Division 2 emergency power bus.

The exhaust fan, which is normally in standby, is started automatically when the Division 1 diesel generator is started. The operation of this standby exhaust fan opens the outdoor air bypass damper when outdoor air temperature is above 40°F and when the Division 2 supply fan is not running.

The Division 2 air handling unit is composed of a 30-kW electric blast coil heater and a centrifugal fan in a sheet metal housing. It is normally in standby. When the Division 2 diesel generator is started, this air handling unit is automatically started through interlocks. When this air handling unit is started, a damper in the supply air duct from the turbine building HVAC system (which is used for normal ventilation of the corridors) is automatically closed. This air handling unit then supplies tempered air to the corridors in which Division 2 cable is routed.

9.4.8.3 Safety Evaluation

All components of the cable cooling system are powered from their respective emergency diesel buses. All HVAC components in this system are Seismic Category I, Quality Class I.

The capacity of the Division 1 and Division 2 components of the HVAC system is sufficient to maintain safe ambient conditions in the event of failure of either power division. The components powered from the two divisions are independent and physically separated to preclude the possibility of any single failure damaging both systems.

9.4.8.4 Inspection and Testing Requirements

All components of the cable cooling system which are normally in standby are accessible for out-of-service inspection. All system ductwork was balanced for air flows in accordance with the procedures of AABC. All system components were subject to preoperational testing to verify that the system functions in accordance with the design requirements.

The performance of the ventilation system components are verified while the system is in operation. Temperature and pressure instrumentation is provided, as shown in Figure 9.4-7, to monitor system performance.

9.4.8.5 Instrumentation Requirements

The Division 1 standby exhaust fan and the Division 2 air handling unit are controlled by separate, local, ON-AUTO-OFF switches (spring back from OFF to AUTO). With the control switches in the AUTO position, the Division 1 standby exhaust fan starts automatically, via electric interlocks, when the Division 1 diesel generator is started.

The Division 2 air handling unit control switch is normally in the AUTO position. It automatically starts and its control circuit energizes, via electric interlocks, when the Division 2 diesel generator is started. When energized, the air handling unit's control circuits perform the following function:

The inlet mixing damper and electric blast coil heaters are controlled by electric thermostats located in the corridor. When corridor temperature is above 70°F, the damper is positioned for 100% outdoor air. When the temperature drops below a nominal 70°F, the damper is positioned for minimum outdoor air. When the temperature drops below a nominal 62°F and 54°F, respectively, the two stages of electric heater are energized.

Failure of air flow through the air handling unit fan after the fan motor is energized will trip a differential pressure switch that deenergizes the air handling unit control circuits and activates an alarm. Also, the filter bank in the air handling units is provided with a differential pressure switch which activates an alarm on high differential pressure.

The operation of the Division 1 standby exhaust fan opens the outdoor air bypass damper when outdoor air temperature is above 40°F and when the Division 2 supply fan is not running.

9.4.9 REACTOR BUILDING EMERGENCY COOLING SYSTEMS

9.4.9.1 Design Bases

All equipment located within the Seismic Category I reactor building which requires a controlled environment to operate, and which must operate in the event of a LOCA, is enclosed in individual equipment rooms. These rooms are normally heated and ventilated by the reactor building HVAC system (see Section 9.4.2); however, under emergency conditions, the rooms are automatically cooled by recirculation of room air through their respective reactor building emergency cooling system. Ambient temperatures of the following rooms are maintained below equipment operability limits during all emergency modes of operation. See Table 3.11-1.

HPCS pump room
Division 1 Low-pressure core spray (LPCS) pump room
Division 2 Reactor core isolation cooling (RCIC) pump room
Division 1 Residual heat removal (RHR) pump room
Division 2 RHR pump rooms (2 pump rooms)
Division 1 Motor control center (MCC) room (el. 522)
Division 2 MCC room (el. 522)
Division 1 dc MCC room (el. 471)
Division 1 H2 recombiner MCC room (el. 572)
Division 2 H2 recombiner MCC room (el. 572)
Fuel pool cooling (FPC) pump room

The critical MCC and FPC pump rooms emergency cooling fans auto start and the rooms are isolated from the reactor building HVAC system on an F, A, or Z signal. Although the FPC pump room is isolated from the reactor building HVAC system, the room temperature can be maintained below equipment operability limits with the reactor building HVAC dampers open. The ECCS and RCIC pump rooms emergency cooling fans auto start when their respective pump starts. SW is provided to the emergency cooling coils as described in Section 9.4.9.5.

All components of the reactor building emergency cooling system are designed Quality Class I, Seismic Category I and are powered from the same diesel generator bus as the equipment being served. Since each separate cooling system services redundant emergency equipment systems, a failure of one cooling system will not effect the operational function of the other cooling systems or the safe shutdown of the reactor. The means of protecting the system vents and louvers from missiles is discussed in Section 3.5.

All ductwork connected to the fan coil units in this system is designed to Seismic Category I requirements. The system fans are constructed and rated in accordance with the applicable AMCA standards. The water cooling coils are designed and code stamped in accordance with the requirements of the ASME Code Section III, Class 3.

9.4.9.2 System Description

The reactor building emergency cooling system is shown in Figure 9.4-2. Each of the rooms housing critical equipment is provided with an individual air handling unit (two units in the FPC pump room) which is fully enclosed within the room. Each air handling unit is comprised of a direct drive centrifugal or vane axial fan and a water cooling coil in a sheet metal housing. Water is supplied to the water coils by the SW system (see Section 9.2.7). During normal operation, these air handling units are in standby.

All units recirculate the air within the room they serve, removing the heat generated in the room via the water coil, to maintain temperatures below the design limits. Equipment details are on Table 9.4-2. Equipment seismic information is given in Table 3.2-1.

9.4.9.3 Safety Evaluation

Each of the emergency equipment rooms in the reactor building is provided with a separate, independent cooling system, all components of which are located within the room serviced. Each cooling system is powered from a Class 1E bus of the same division as the equipment it serves and is designed to withstand the effects of an SSE. A failure of one cooling system will not affect the operational function of any other system or the safe shutdown of the reactor.

With the exception of the FPC pump room the air handling units serving the pump rooms are interlocked electrically with the pumps they serve in such a manner that they start when the pump is started. The air handling units serving the FPC pump room and critical MCC rooms are started by any of the F, A, or Z isolation signals.

The FPC pump room air handling units also start on loss of offsite power.

9.4.9.4 Testing and Inspection Requirements

All components of the reactor building emergency cooling system are normally in standby and are accessible for out-of-service inspection. All piping systems were subject to hydrostatic tests during manufacture and erection.

The cooling system was subject to preoperational testing to verify that the system functions in accordance with the design requirements, and performance is verified periodically by testing during unit operation.

9.4.9.5 Instrumentation Requirements

With the exception of the FPC pump room units, the air handling units serving the pump rooms are controlled identically. Each is electrically interlocked with the pump it serves to

operate when the pump operates. Running lights for the fans are located on the MCCs. The SW system supplies the air handling unit water coil when the pump is started. A local manual switch is provided in each pump room for testing the air handling unit fan.

The controls for each of the air handling units serving the FPC pump room and the critical MCC rooms are identical. An ON-AUTO-OFF switch (spring back from OFF to AUTO) is provided for each fan unit in the main control room. Normally all switches are in the AUTO position and the fan units are in standby. In the AUTO mode, any of the three isolation signals (F, A, Z) will cause the following operations, via electric interlocks.

a. Air handling unit fans start,

b. Solenoid valves associated with the air-operated dampers in the reactor building ventilation system supply air ducts to the critical MCC and FPC pump rooms are deenergized, thus isolating these rooms from the balance of the reactor building.

For the F isolation signal, the Division 1 and 2 SW systems are auto started as described in Section 7.3.1.1.6 and provide cooling water to these unit cooling coils. For the A isolation signal, the Division 2 SW system is auto started via RCIC as described in Section 7.3.1.1.6 and the Division 1 SW system can be manually started as needed from the control room. For the Z isolation signal, the Division 1 and 2 SW systems can be manually started as needed from the control room.

In addition, the FPC pump room fan units will start on loss of offsite power when the control switch is in the AUTO position.

Room temperature indicators, alarms and/or HVAC related alarms are provided in the main control room for each of the equipment rooms as shown on Figure 9.4-2 or 9.2-12, as applicable. The alarms will annunciate in the event that temperatures exceed the design limit.

In addition, the leak detection system provides temperature indication and alarms in the main control room for Division 1 RHR A pump room, Division 2 RHR B pump room and the RCIC pump room as shown on Figure 7.6-1.

9.4.10 STANDBY SERVICE WATER PUMP HOUSE

9.4.10.1 Design Bases

The SW pump house HVAC systems are designed to remove the heat generated by operation of the SW pumps and the HPCS service water pump and to limit the temperature in the two pump houses as specified in Table 3.11-1. The ventilation systems are designed as ESF systems and are powered from a Class 1E bus of the same division as the pumps being served.

Since each HVAC system associated with the redundant SW pumps is separate and independent, a failure in one system will not affect the operational function of the other system. The means of protecting the system vents and louvers from missiles is discussed in Section 3.5.

Heating of the pump houses is provided by electric unit heaters (four in each building) sized to heat the building spaces to maintain temperatures as specified in Table 3.11-1. The unit heaters are powered from the emergency diesel-generator buses, but are classified Seismic Category II. If the pumps are required to operate following a seismic event, the heat generated from the pump motor is sufficient to maintain the building above freezing. The SW pumphouse outside air supply fans and motors are classified Seismic Category IM. These fans and motors are not required to operate to cool the safety related equipment in the pump houses under accident conditions. The remaining components, ductwork, and piping in the SW pump house ventilation systems are classified Seismic Category I.

The fan coil units and the supply fans are constructed and rated in accordance with the applicable AMCA standards. The water cooling coils are designed and code stamped in accordance with the requirements of ASME Code Section III, Class 3.

9.4.10.2 System Description

The SW pumps are located in pump houses adjacent to the emergency spray ponds. The loop A SW pump and the HPCS service water pump share one pump house and the loop B SW pump is in a second pump house. The HVAC systems serving the two pump houses are depicted in Figure 9.4-7. Each system consists of a fan coil unit composed of a sheet metal cabinet containing a direct-drive centrifugal fan and a water cooling coil, and a separate centrifugal supply fan with inlet mixing dampers.

Each fan coil unit is interlocked electrically with the associated SW pump it serves in such a manner that the unit fan starts and recirculates room air over the water cooling coil when the pump starts. Water is supplied to the unit coil from the main supply header of the SW pump. The fan coil units are normally in standby and operate only when the pump is started.

The supply ventilation fans in both pump rooms operate automatically when required. A room thermostat in the pump house starts the fan on a temperature rise to 80°F or above and stops the fan on a temperature drop to 60°F or below. When the outdoor temperature is above 40°F, 100% outdoor air is supplied to the room. When the outdoor temperature falls below 40°F, a temperature indicating switch, with its sensor in the outdoor air intake duct, positions the motor-operated intake mixing damper to a position for 4400 cfm recirculation air and 600 cfm outdoor air. Air is exhausted from the pump houses through relief dampers at a rate between 600 cfm and 5000 cfm depending on the intake of outside air.

There are four 10-kW electric unit heaters in each pump house. Each heater is controlled by a separate wall-mounted thermostat which starts the heater on a drop in room temperature to

below 40°F. Equipment details are given in Table 9.4-6. Equipment seismic information is given in Table 3.2-1.

9.4.10.3 Safety Evaluation

The following safety features are incorporated in the design of the heating and ventilating systems serving the SW pump houses:

a. Each of SW pump rooms 1A and 1B is serviced by a separate 100%-capacity fan coil unit powered from the same Class 1E bus as the pump room being serviced,

b. The HPCS service water pump is located in SW pump house 1A,

c. Both fan coil units and the HPCS supply fan start when the pump serviced starts,

d. In the event of loss of offsite power, the ventilation equipment is powered from the emergency diesel generator buses, and

e. All ESF components of the system are designed to operate in the event of an SSE.

Since each HVAC system associated with the redundant SW pumps is separate and independent, a failure in one system will not effect the operational function of the other system.

9.4.10.4 Testing and Inspection Requirements

The performance of normally operating components of the SW pump house ventilating systems can be verified while operating. All standby equipment is accessible for out-of-service inspection. All system ductwork was balanced for air flows in accordance with the procedures of AABC. All system components were subject to preoperational testing to verify that the system functions in accordance with the design requirements. All piping systems and components were subject to hydrostatic tests during erection.

9.4.10.5 Instrumentation Requirements

In addition to the instrumentation described in Section 9.4.10.3 the following devices are provided:

a. Each fan coil unit fan is provided with a local rack-mounted ON-AUTO-OFF switch (spring back to AUTO) which is used to test fan operation,

b. Each supply air fan is provided with a local rack-mounted ON-AUTO-OFF switch (spring back from OFF to AUTO) which is used to test fan operation,

c. Differential pressure switches are provided across each fan coil unit fan and each supply fan which annunciate an alarm in the main control room in the event of low differential pressure when the fan is given a start signal, and

d. Temperature switches in each pump room annunciate alarms in the main control room in the event of high or low temperatures.

9.4.11 PRIMARY CONTAINMENT

9.4.11.1 Design Bases

The primary containment is divided into two separate volumes: the drywell which houses the reactor vessel and auxiliaries, and the wetwell which housed the suppression pool. There is no heat producing equipment in the wetwell; therefore, a wetwell air cooling system is not required. The drywell, which has a high internal heat load, is provided with recirculation cooling system designed to meet the following requirements:

a. To limit during normal plant operation, the average air temperature within the primary containment drywell to Table 3.11-1 limits,

b. To provide suitable working temperatures inside the primary containment for personnel during shutdown and refueling operations, and

c. To remove the additional heat released in the event of a reactor scram, and to limit temperatures in the neutron monitoring cable area beneath the reactor to Table 3.11-1 limits.

The primary containment cooling system is not required for safe shutdown of the reactor. Essential equipment located in primary containment that is required for safe shutdown of the reactor is designed to function without the containment cooling system in operation.

All components of the primary containment cooling system are classified Seismic Category I. System fans are constructed and rated in accordance with applicable AMCA codes. The water cooling coils are designed and code stamped in accordance with the requirements of the ASME Code Section III, Class 3.

9.4.11.2 System Description

Equipment seismic information is given in Table 3.2-1. The equipment details are described in Table 9.4-2. The primary containment cooling system is shown in Figure 9.4-8. Cooling of the drywell is provided by five fan coil units which recirculate containment air through water cooling coils for heat removal. Seven recirculation fans and two head area return fans are also provided at various locations in the drywell to provide additional air turbulence to prevent pockets of hot air from developing. Each of the five fan coil units consists of two vaneaxial fans, both of which operate at the same time, and a water cooling coil in a sheet metal housing. Provisions have been made to install filters in the units, for coil protection, while the units are operated during plant construction; however, no filters are required during normal plant operation. Water is supplied to the unit cooling coils from the reactor building closed cooling water system as described in Section 9.2.2.

Three of the fan coil units are located low in the drywell and two of the units are located at a higher level.

Each of the three lower level fan coil units are provided with two vaneaxial fans one of which discharges directly into the general drywell volume, and the other discharges, via ductwork, into the neutron monitoring cable area beneath the reactor and general drywell volume.

The two upper level fan coil units are each provided with one 30,000-cfm capacity fan and one 10,000-cfm capacity fan. The larger fans discharge directly into the upper volume area. The smaller fans discharge into the containment head area above the refueling bellows. Two vaneaxial head area return fans draw air from the containment head area and discharge it below the refueling bellows. Return air to the upper fan coil units is drawn from immediately below the refueling bellows. During normal operation, one or both of the head area return fans will be running.

Three recirculating fans are located at lower level and four fans are located at upper level in the drywell to provide air circulation. During normal operation, up to three lower level fans and up to four upper level fans are operating.

In the event of a reactor scram, both of the head area return fans are started (unless already operating).

9.4.11.3 Safety Evaluation

The primary containment cooling system does not have to operate, in the event of LOCA, to ensure the safe shutdown of the reactor. Head area return fans (CRA-FN-4A and CRA-FN-4B) will operate post-LOCA to help ensure hydrogen mixing. Design of the system incorporates the following features to ensure safe operation.

a. All fan coil units, recirculation fans, and head area return fans are designed to withstand the effects of an SSE and are powered from the emergency diesel buses;

b. All containment fans have been evaluated for the normal environmental conditions in containment to ensure long term reliable operation; and

c. Those fans used for hydrogen mixing following a LOCA are identified and qualified to Class 1E requirements. Additionally, these fans are powered from Class 1E sources.

9.4.11.4 Testing and Inspection Requirements

All components of the primary containment cooling system were subject to shop and field tests prior to plant operation. System performance is verified during reactor operation when the equipment is operating at design conditions.

All system ductwork was balanced for air flows in accordance with the procedures of the AABC. All system components were subject to preoperational testing to verify that the system functions in accordance with the design requirements.

9.4.11.5 Instrumentation Requirements

The primary containment fan coil units, recirculation fans, and cooling water isolation valves are each controlled by individual selector switches with indication lights, mounted in the main control room.

Temperature sensors are located throughout the primary containment as indicated in Figure 9.4-8. These sensors continuously monitor ambient conditions inside the containment and the performance of the cooling system.

9.4.12 MAKEUP WATER PUMP HOUSE

9.4.12.1 Design Bases

The heating and ventilating system provided in the makeup water pump house is designed to maintain temperatures within the structure between 50°F and 104°F to ensure suitable conditions for equipment operation. In the event of the hypothesized dewatering of the SW spray ponds due to a tornado, the makeup water pumps may be operated to refill the spray ponds (see Sections 9.2.7 and 10.4.5).

Since the ventilation system must be operated to ensure an acceptable environment for the makeup pump motors, the system is designed with redundant equipment to ensure that a single

component failure will not interfere with the operation function of the system. In the event a tornado causes the loss of offsite power, the system is powered from the emergency diesel generator buses. The fresh air intake and exhaust air openings are located in the east exterior wall and are shielded by a concrete barrier wall which precludes entry of a missile such as a tornado-generated missile.

The makeup water pumps and auxiliaries are not required to operate in the event of an SSE; therefore, all components of the heating and ventilating system serving the pump house are designed to Seismic Category II requirements as defined in Section 3.2. The system fans are constructed and rated in accordance with applicable AMCA standards.

9.4.12.2 System Description

The makeup water pump house heating and ventilating system is shown in Figure 9.4-7. It consists of two full-capacity air handling units and two battery hood exhaust fans which service the electric equipment area, and two full-capacity fan coil units and two electric space heaters which service the pump area. Equipment details are given in Table 9.4-7. Equipment seismic information is given in Table 3.2-1.

The two air handling units serving the electric equipment area consist of an insulated sheet metal cabinet housing a replaceable roughing filter, a two-stage electric blast coil heater, a water cooling coil, and a centrifugal fan. One of the two air handling units operates at all times to maintain design temperatures in the electric equipment area. The second unit is in standby and starts in the event that the operating unit fails.

The air handling units draw air from the outside atmosphere through intake louvers. The air is discharged, via ductwork, into the electric equipment area from which it flows into the pump room. It is then released either to the outside atmosphere, via relief dampers, or is partially recirculated back through the unit. Motor-operated dampers on the unit intake ducts are so arranged that the unit can draw 100% outdoor air or recirculate air drawn from the pump area back through the unit. The damper motor is controlled by a temperature switch which senses outdoor temperature. The damper will be positioned for 100% outdoor air when the outside temperature is between 50°F and 70°F.

The fan coil units servicing the pump area consist of a centrifugal fan, a water cooling coil, and a roughing filter in a sheet metal housing. The units recirculate air in the pump room only and are interlocked electrically with the makeup water pumps to start when the pumps start. Each unit has sufficient capacity to maintain design conditions with two of the makeup water pumps operating. In the event all three pumps are operating, the second fan coil is automatically started.

Water is supplied to the electrical area air handling units and the pump area fan coil units from the discharge header of the makeup water pumps. A fail-closed, motor-operated valve is

provided in the water supply line to each unit. The valve control circuit is energized when its respective fan is energized. With the control circuit energized, the valve is controlled by a thermostat, located in the area serviced, which opens the valve on a temperature rise to 90°F or above.

The electric blast coil heaters in the electrical equipment area air handling units are controlled by separate two-stage room thermostats. Two electric unit heaters provide supplementary heating to the pump area. A temperature switch starts the heaters at the desired temperature setpoint.

Two spark resistant, battery hood exhaust fans both operate continuously to exhaust any combustible gases generated from the batteries to the atmosphere.

9.4.12.3 Safety Evaluation

The makeup water pumps are required to supply water to the SW spray ponds in the event a design basis tornado empties the ponds of their coolant (see Section 9.2.7). The pump house HVAC system is required to ensure that the operation of the makeup pumps is not diminished by extremes in temperature. The HVAC system provided in the makeup water pump house incorporates the following safety features to ensure that a single component failure will not prevent the system from performing its operational function:

a. Two full-capacity air handling units are provided for the electrical equipment area and two full-capacity fan coil units are provided for the makeup pump area; therefore, failure of any one unit will not effect system operation,

b. The redundant HVAC equipment is powered from different divisions of the emergency diesel generator buses; therefore, failure of any one bus will affect only one train of ventilating equipment, and

c. All heating and ventilating equipment is located within the pump house where it is protected from tornado missiles.

9.4.12.4 Testing and Inspection Requirements

The performance of the heating and ventilating system servicing the makeup water pump house can be verified while the systems are operating. The operability of standby equipment is determined by rotating the duty of redundant systems.

All systems ductwork was balanced for air flows in accordance with the procedures of AABC and all piping systems and components were subject to hydrostatic tests during erection.

9.4.12.5 Instrumentation Requirements

The following major instrumentation devices are used in the control and monitoring of the makeup water pump house heating and ventilating system in addition to those described in Section 9.4.12.2:

a. Three position selector switches (ON-OFF-AUTO) are provided locally for each of the two pump area fan coil units and are normally in the AUTO position. In this position, the starting of the makeup pump, powered from the same bus as the fan coil unit, will start the fan coil unit and energize its control circuit via an electric interlock. The second makeup pump start will not start the second fan coil unit. Both fan coil units operate only when all three pumps are operating. Differential pressure switches across the fan of each unit will annunciate an alarm and start the standby unit in the event of a low differential pressure;

b. Three position selector switches (ON-OFF-STANDBY) are provided locally for each of the two electrical equipment area air handling units. One unit is normally operating with the second unit in standby. Differential pressure switches across each fan, annunciate an alarm and start the standby unit in the event of low differential pressure across the operating fan;

c. Each of the two battery hood exhaust fans are provided with local selector switches and a differential pressure switch across the fan which annunciates a local alarm in the event of fan failure; and

d. Temperature switches located in the electrical equipment and pump areas annunciate alarms in the main control room on high or low ambient temperature conditions.

9.4.13 SERVICE BUILDING

9.4.13.1 Design Bases

The service building HVAC system is designed to provide a controlled environment for personnel comfort within the building. The heating and air conditioning system is of a conventional design.

9.4.13.2 System Description

The service building HVAC system is a “push-pull,” multizone system using chilled water for cooling and hot water for heating.

9.4.13.3 Safety Evaluation

The service building HVAC system has no safety function. Malfunction or failure of the HVAC system will not impair normal or emergency plant operations.

There are no potential sources of radioactive contaminants, with the exception of tritium (see Section 9.4.16.3), nor safety related equipment in the service building.

9.4.14 WATER TREATMENT AREA AND MACHINE SHOP

9.4.14.1 Design Bases

The HVAC system serving the water treatment area and machine shop, both of which are in the service building, is designed to remove noxious fumes generated in the area served and to provide tempered air for personnel comfort. The HVAC system is of a conventional design. The system is sized to provide three air changes per hour in the areas served.

9.4.14.2 System Description

The system is basically a once-through system with the facility for partial recirculation of air from the machine shop to reduce heating requirements during the winter months.

Air is supplied to the machine shop and water treatment area by a central supply air system composed of a ventilation unit and distribution ductwork.

Exhaust fans are provided to exhaust air from the machine shop and water treatment area.

9.4.14.3 Safety Evaluation

The heating and ventilating system serving the water treatment area and machine shop has no safety function. Malfunction or failure of the system will not effect reactor operation nor cause the release of radioactive materials.

There are no potential sources of radioactive contaminants, with the exception of tritium (see Section 9.4.16.3) nor safety-related equipment in the areas serviced.

9.4.15 CIRCULATING WATER PUMP HOUSE

9.4.15.1 Design Bases

The HVAC system serving the circulating pump house is designed to satisfy the following criteria:

a. Limit the maximum temperature in the circulating pump area to within 10°F of the ambient temperature when the pumps are operating,

b. Maintain the pump area at a minimum temperature of 50°F when the pumps are not operating,

c. Maintain the electrical equipment room and control room pressurized, with respect to the adjacent rooms, to prevent the ingress of noxious fumes, and maintain the room temperature between 65°F and 85°F,

d. Exhaust air from the halogen storage tank room, halogen injection pump room, and acid pump room to prevent the potential buildup of noxious fumes, and heat the halogen injection pump room to 65°F for personnel comfort during room occupancy, and

e. Continuously exhaust air to atmosphere from the diesel oil storage room to prevent the potential buildup of combustible fumes.

9.4.15.2 System Description

The HVAC systems serving the circulating water pump house are shown in Figure 9.4-7.

The pump area is ventilated by six 33,000-cfm capacity roof exhaust fans, each of which is controlled by a manual switch.

When the exhaust fans are on, air is induced into the pump area through weather louvers in the exterior walls of the structure. Heat is provided in the pump area by twelve electric unit heaters, each controlled by separate room thermostats.

The electrical equipment room and control room are serviced by an air-cooled, roof-mounted air conditioning unit. The unit has a built-in, electric blast coil heater, a roughing filter bank, an integral air-cooled condenser, and a centrifugal fan. The unit supplies air to the two rooms, drawing outdoor air to pressurize the rooms and recirculating air from the electric equipment room. The pressurizing outside air supplied to the rooms is relieved to the pump area via relief dampers in the partition wall between the rooms and the pump area.

A fiberglass roof ventilator continuously exhausts air from the halogen injection pump room, and the acid pump room. The halogen storage tank room is served by a heat pump unit, which recirculates air from this area. If needed, the fiberglass roof ventilator can be used to exhaust air from the halogen storage tank room by opening a volume damper in the exhaust duct. Makeup air is induced into the halogen injection pump room and the acid pump room through relief dampers from the pump area. An electric unit heater is provided in the halogen injection pump room for personnel comfort when the area is occupied. A motor-operated damper in the branch exhaust duct from the halogen injection pump room is controlled by a thermostat located in the halogen storage tank room in such a manner that air exhaust from the halogen injection pump room can be reduced when the outdoor temperature (as sensed in the halogen storage tank room) falls below a predetermined setpoint to minimize the halogen injection pump room heating requirements.

An explosion proof wall fan continuously exhausts air from the diesel oil tank storage room to the atmosphere to prevent the buildup of combustible gases. Air is introduced into the room from the pump area through a vent opening protected by a 3-hr rated fire damper. Air exhausted from the room is also vented through a 3-hr rated fire damper. Equipment details are given in Table 9.4-8. Equipment seismic information is given in Table 3.2-1.

9.4.15.3 Safety Evaluation

The HVAC system serving the circulating water pump house has no safety function. Malfunction or failure of the system will not impair normal or emergency operation.

9.4.15.4 Testing and Inspection Requirements

All system ductwork was balanced for air flows in accordance with the procedures of AABC. All system components were subjected to preoperational testing to verify that the system functions in accordance with the design requirements.

9.4.15.5 Instrumentation Requirements

Each electric unit heater is put in service by a local hand switch and is controlled by its own thermostat.

Each fan is put in service by an OFF-ON switch.

The electrical equipment room air conditioning unit is put in service by a local ON-OFF switch. When ON, the fan runs continuously and the unit control circuit is energized permitting a one-stage cooling, two-stage heating thermostat to cycle the unit compressor or the two-stage electric blast coil heater, as required.

Pressure switches with sensors in the exhaust duct of the chlorine exhaust fan and the supply duct of the air conditioning unit fan will annunciate alarms in the event of a fan failure.

9.4.16 PLANT HEATING STEAM SYSTEM

9.4.16.1 Design Basis

The plant HS system, in conjunction with heating coils, humidifiers, and steam unit heaters in the plant HVAC systems, discussed previously in this section, is designed to:

a. Maintain a minimum temperature of 50°F in the reactor, radwaste, and turbine generator buildings during cold weather conditions,

b. Maintain a minimum temperature of 65°F on the refueling floor of the reactor building and in the service building machine shop and water treatment areas,

c. Provide humidified air to the radwaste control room, radiochemistry laboratory, counting room, and hot instrument shop, and

d. Generate, through a hot water heat exchanger, 180°F water for perimeter heating of service building offices and laboratories.

The plant HS system is designed for 50 psig service. The source of the HS is the gland steam evaporator during turbine generator operation and the auxiliary boiler during plant shutdown. The heating condensate (HCO) system is designed as a gravity return to the auxiliary boiler condensate return tank (CO-TK-1) in the turbine generator building.

9.4.16.2 System Description

The plant HS system is depicted in Figure 9.4-9. The system originates from four pressure reducing stations (two in the turbine generator building and one each in the reactor and radwaste buildings). Steam at 200 psig pressure is supplied to these pressure reducing stations from either the auxiliary boiler or the gland steam evaporator. At the pressure reducing stations, the steam pressure is reduced to 50 psig and this steam is fed to the heating coils, humidifiers, steam unit heaters, and hot water heat exchanger.

The condensate from the HS system is returned to the auxiliary boiler condensate return tank located in the auxiliary boiler room of the turbine generator building. Condensate from the reactor building, turbine generator building, and upper level of the service building is returned to the auxiliary condensate return tank by gravity.

In the radwaste building and lower level of the service building, the condensate returns are below the level of the auxiliary condensate return tank. A condensate pump-set is, therefore,

provided in each of these areas to pump the condensate to the return tank. Equipment details are given in Table 9.4-9. Equipment seismic information is given in Table 3.2-1.

9.4.16.3 Safety Evaluation

The auxiliary boiler and associated steam systems were originally intended to be free from radiological contamination. During operation, however, the system has become contaminated with tritium. Possible sources of the tritium activity are tube leaks in the feedwater heaters or the steam evaporator. As is discussed in Section 11.1.3, all tritium produced in the reactor is eventually released to the environs. Tritium may be released from the heating system in vapor and gaseous form or in auxiliary boiler water blowdown. The boiler blowdown tank drains to a turbine building sump (see Section 9.3.3.2.3.1) which is directed to radwaste processing. The tritium contamination in the auxiliary boiler and associated steam systems is monitored and efforts are made to minimize the levels of activity. The tritium does not necessitate changes in system design or operation and will not cause significant radiological impacts.

The plant HS system has no safety function. Any rupture in HS or HCO piping does not impair safe reactor shutdown as discussed in Sections 3.6.1.15.3 and 3.6.1.18.3.6. All system piping except that in the reactor building is Seismic Category II. All system piping in the reactor building is analyzed and supported to Seismic Category I loading requirements.

9.4.16.4 Testing and Inspection Requirements

The performance of plant HS system was verified by tests prior to startup and is verified during system operation. All components in the system were tested and inspected at the manufacturers plant for conformance with specifications. After installation, the major components were checked and the system hydrostatically tested to ensure leaktightness.

9.4.16.5 Instrumentation Requirements

Adequate instrumentation is provided to monitor and control operation of the system.

9.4.17 REFERENCES

9.4.1 Calculation ME-02-17-02, Control Room Habitability during a LOCA with LOOP and Emergency A/C Coils Aligned to Emergency Chillers (CCH)

Table 9.4-1

Main Control Room/Cable Spreading Room/Critical Switchgear Area
Major Components of HVAC Systems

a. Exhaust fans

1. Tag number	WEA-FN-51	WEA-FN-52	WEA-FN-53A	WEA-FN-53B
2. Number of fans	1	1	1	1
3. Area served	Main control room	Cable spreading room	Battery room 1	Battery room 2
4. Fan type and style	Centrifugal SWSI	Centrifugal SWSI	Centrifugal SWSI	Centrifugal SWSI
5. Drive	Direct	Direct	Direct	Direct
6. Capacity	750 acfm	1000 scfm	2400 scfm	900 scfm
7. Total static pressure (in., w.g.)	1.4	1.75	1.64	1.5
8. Motor type	Open drip-proof self-ventilated with Class B insulation with a maximum temperature rise of 50° C above a 50°C ambient			
9. Motor (hp)	1	1	2	1

b. Air handling units

1. Tag number	WMA-AH-51A WMA-AH-51B	WMA-AH-52A WMA-AH-52B	WMA-AH-53A WMA-AH-53B
2. Number of units	2 (1 standby)	2 (1 standby)	2
3. Area served	Main control room	Cable spreading room	Critical switchgear
4. Air flow per unit (acfm)	21,000	9500	28,100 (22,800 for WMA-AH-53B)
5. Total static pressure (in., w.g.)	5.50	4.27	6.13
6. Sensible cooling capacity (Btu/hr) per unit			
a) Normal operation	600,000	235,000	370,000 (320,000 for WMA-AH-53B)
b) Emergency operation	285,000	160,000	370,000 (320,000 for WMA-AH-53B)
7. Water supply source			
a) Normal operation	Chilled water	Chilled water	Chilled water or Plant service water
b) Emergency operation	CCH or standby service water	Standby service water	Standby service water

Table 9.4-1

Main Control Room/Cable Spreading Room/Critical Switchgear Area
Major Components of HVAC Systems (Continued)

c. Main control room emergency filter units	
1. Tag number	WMA-FU-54A, WMA-FU-54B
2. Number of units	2
3. Capacity (scfm)	1000
4. Fan	Centrifugal direct drive
5. Total static press (in., w.g.)	9.6
6. Prefilters	
a) Type	Replaceable media
b) Efficiency	80-85%
c) Initial pressure drop	0.5 in. maximum
7. HEPA filters	
a) Type	High efficiency
b) Media	Glass media, water repellent and fire resistant
c) Efficiency (DOP 0.3 μ particle size)	99.97%
d) Initial pressure drop (in., w.g.)	1.0 maximum
8. Charcoal adsorber	
a) Media	Activated carbon
b) Test efficiency @ 70% RH	97.5% (methyl iodide)
d. Emergency chiller units	
1. Tag number	CCH-CR-1A, CCH-CR-1B
2. Number of units	2 (1 each division)
3. Peak operating load	50 tons
4. Motor (kW)	126
5. Chilled water (gpm)	145
6. Chilled water supply temperature	44°F
7. Condenser cooling source	Standby service water
e. Emergency chiller pumps	
1. Tag number	CCH-P-1A, CCH-P-1B
2. Number of units	2 (1 each division)
3. Capacity	145 gpm at 56 ft total head
4. Motor (hp)	7.5
5. Units served	CCH-CR-1A, CCH-CR-1B

Table 9.4-2

Reactor Building and Primary Containment Areas
Major Components of HVAC Systems

a. Heating and ventilating unit (evaporative air washer)

1. Tag number	ROA-HV-1
2. Number of units	1
3. Air flow (scfm)	80,000
4. Steam flow (lb/hr)	6800
5. Supply air temperature	
a) Summer	72°F DB (evaporative cooling)
b) Winter	50°F
6. Fan type	Vaneaxial V-belt drive (200 hp motor)
7. Number of fans	2 (1 standby)
8. Fan total pressure (in., w.g.)	9.3

b. Reactor building exhaust fans

1. Tag number	REA-FN-1A REA-FN-1B
2. Number of fans	2 (1 standby)
3. Fan type	Vaneaxial
4. Drive	Direct (200 hp motor)
5. Capacity	80,000 - 105,000
6. Total (scfm) pressure (in., w.g.)	9.43 @ 105,000 scfm
7. Motor type	TEAO with Class “RH” insulation

Table 9.4-2

Reactor Building and Primary Containment Areas
Major Components of HVAC Systems (Continued)

c. Reactor building emergency fan coil units (part 1 of 2)

1. Tag number	RRA-FC-1 RRA-FC-2 RRA-FC-3	RRA-FC-19 RRA-FC-20	RRA-FC-4	RRA-FC-5	RRA-FC-6
2. Number of units	3	2	1	1	1
3. Air flow per unit (acfm)	5208	10,000	15,625	9375	3125
4. Sensible cooling capacity (Btu/hr) per unit	165,000	134,000	500,000	280,000	60,000
5. Total static pressure (in.,w.g.)	1.34	0.5	1.64	1.46	1.53
6. Area served	RHR pump rooms	FPC pump room	HPCS pump room	LPCS pump room	RCIC pump room
7. Water supply service	Standby service water	Standby service water	Standby service water	Standby service water	Standby service water

c. Reactor building emergency fan coil units (part 2 of 2)

1. Tag number	RRA-FC-10 RRA-FC-11	RRA-FC-12	RRA-FC-13 RRA-FC-14
2. Number of units	2	1	2
3. Air flow per unit (acfm)	5730	6500	4100
4. Sensible cooling capacity (Btu/hr) per unit	71,280	85,000	53,900
5. Total static pressure (in.,w.g.)	0.5	1.41	1.39
6. Area served	MCC rooms	Division 1, dc-MCC-room	H_2 recombiner rooms
7. Water supply service	Standby service water	Standby service water	Standby service water

Table 9.4-2

Reactor Building and Primary Containment Areas
Major Components of HVAC Systems (Continued)

d. Reactor building steam tunnel fan coil units

1. Tag number	RRA-FC-8 RRA-FC-9 RRA-FC-21
2. Number of units	3
3. Air flow per unit (scfm)	4250 (RRA-FC-8) 4000 (RRA-FC-9) 3000 (RRA-FC-21)
4. Sensible cooling capacity (Btuh) per unit	97,200 RRA-FC-8 84,758 RRA-FC-9 97,200 RRA-FC-21
5. Total static pressure (in., w.g.)	1.53
6. Area served	Steam tunnel
7. Water supply source	Plant service water

e. Vehicle air lock (railroad bay) HVAC

1. Tag number	RRA-AH-7	RRA-AH-8	RRA-EUH-1 RRA-EUH-2 RRA-EUH-3 RRA-EUH-4 RRA-EUH-5 RRA-EUH-6 RRA-EUH-7 RRA-EUH-8
2. Number of units	1	1	8
3. Fan type	Centrifugal DWDI	Centrifugal	Axial
4. Drive (per unit)	V-belt (3 hp motor)	Belts (20 hp motor)	Direct drive (1/3 hp motor)
5. Nominal air flow	5000 scfm	32,500 cfm	1635 cfm
6. Sensible cooling capacity at nominal air flow (MBtu/hr)	42.5	None	None
7. Electric heating capacity per unit (kw)	15	None	38.4
8. Total static pressure (in., w.g.)	1.68	N/A	N/A
9. Area served	Vehicle air lock (railroad bay)	Vehicle air lock (railroad bay) R106 Door	Vehicle air lock (railroad bay)

Table 9.4-2

Reactor Building and Primary Containment Areas
Major Components of HVAC Systems (Continued)

f. Sump vent filter units	
1. Tag number	REA-FU-2A REA-FU-2B
2. Number of units	2 (1 standby)
3. Capacity (scfm)	1000
4. Fan	Centrifugal direct drive
5. Total static pressure (in., w.g.)	9.6
6. Prefilters	
a) Type	Replaceable media
b) Efficiency	80-85%
c) Initial pressure drop (in., w.g.)	0.5
7. Heater	
a) Type	Electric resistance (3 stage)
b) Quantity	1
c) Capacity	21 kW total
8. HEPA filters	
a) Type	High efficiency
b) Media	Glass media, water repellent and fire resistant
c) Efficiency (DOP 0.3 μ particle size)	99.97%
d) Initial pressure drop (in., w.g.)	Maximum 1.0
9. Charcoal adsorber	
a) Media	Activated carbon
b) Test efficiency @ 70% RH	99.9% elemental iodine 99% methyl iodide
10. Moisture separator	
a) Type	Impingement
b) Initial pressure drop (in., w.g.)	Maximum 1.0

Table 9.4-2

Reactor Building and Primary Containment Areas
Major Components of HVAC Systems (Continued)

g. Sample room fume hood exhaust filter unit

1. Tag number	REA-FU-15
2. Number of units	1
3. Capacity (scfm)	850
4. Type of fan	Centrifugal direct drive (3 hp motor)
5. Prefilter	Replaceable viscous impingement type
6. HEPA filter	Glass media, water repellent and fire resistant
7. HEPA filter efficiency (DOP 0.3 μ particle size)	99.97%
8. Total static pressure (in., w.g.)	4.5

h. Primary containment fan coil units

1. Tag number	CRA-FC-1A CRA-FC-1B CRA-FC-1C	 CRA-FC-2A CRA-FC-2B
2. Number of units	3 (1 standby)	2 (1 standby)
3. Fan type	Vaneaxial (2 per unit)	Vaneaxial (2 per unit)
4. Fan motor type	TEAO with Class RN insulation	TEAO with Class RN insulation
5. Nominal air flow (scfm)	40,000	40,000
6. Cooling capacity (sensible) at nominal air flow (Btu/hr)	1,140,000	1,140,000
7. Water supply source	Reactor building closed cooling system	Reactor building closed cooling system

Table 9.4-2

Reactor Building and Primary Containment Areas
Major Components of HVAC Systems (Continued)

i. Primary containment head area return fans	
1. Tag number	CRA-FN-4A CRA-FN-4B
2. Number of fans	2 (1 standby)
3. Fan type	Vaneaxial
4. Drive	Direct
5. Capacity (acfm)	5000
6. Total pressure (in., w.g.)	1.68 (normal condition) 5.23 (accident condition)
7. Motor type	TEAO with Class RN insulation
j. Primary containment recirculating fans	
1. Tag number	CRA-FN-3A, CRA-FN-3B, CRA-FN-3C, CRA-FN-5A, CRA-FN-5B, CRA-FN-5C, CRA-FN-5D
2. Number of fans	7 (2 standby)
3. Fan type	Vaneaxial
4. Drive	Direct
5. Capacity (acfm)	20,000
6. Total pressure (in., w.g.)	0.83
7. Motor type	TEAO with Class RN insulation

Table 9.4-3

Radwaste Building Area Major Components of HVAC Systems

a. Heating and ventilating unit (evaporative air washer)

1. Tag number	WOA-HV-1
2. Number of units	1
3. Maximum air flow (acfm)	91,304 (82,430 cfm normal)
4. Steam flow (lb/hr)	6980
5. Supply air temperature	
a) Summer	72°F DB (evaporative cooling)
b) Winter	50°F (minimum)
6. Fan type	Centrifugal SWSI V-belt drive (150 hp motor)
7. Number of fans	2 (1 standby)
8. Total static pressure (in., w.g.)	5.43

b. Air handling units

1. Tag number	WOA-AH-3	WOA-AH-4	WOA-AH-5	WMA-AH-6	WOA-AH-9
2. Number of units	1	1	1	1	1
3. Drive	V-belt (1 hp motor)	V-belt (5 hp motor)	V- belt (2 hp motor)	V-belt (5 hp motor)	V-belt (1.5 hp motor)
4. Nominal air flow (scfm)	1475	6900	3000	7000	2000
5. Cooling capacity (sensible and latent) at nominal air flow (MBtu/hr)	57	255	155	204	76
6. Total static pressure (in., w.g.)	1.9	1.9	1.77	1.9	1.7
7. Area served	Health physics area	Radio chem lab	Hot instrument shop	Radwaste control room	Counting room
8. Cooling water supply source	Chilled water	Chilled water	Chilled water	Chilled water	Chilled water

Table 9.4-3

Radwaste Building Area Major Components of HVAC Systems (Continued)

c. Exhaust filter units	
1. Tag number	WEA-FU-1A, WEA-FU-1B, WEA-FU-1C
2. Number of units	3
3. Maximum capacity (scfm)	42,000
4. Fan type	Centrifugal direct drive (75 hp motor)
5. Total static pressure (in., w.g.)	7.6
6. Prefilters	
a) Type	Replaceable media
b) Efficiency	80-85%
c) Initial pressure drop (in., w.g.)	0.5 maximum
7. HEPA filters	
a) Type	High efficiency
b) Media	Glass media, water repellent and fire resistant
c) Efficiency (DOP 0.3 μ particle size)	99.97%
d) Initial pressure drop (in., w.g.)	Maximum 1.0

Table 9.4-3

Radwaste Building Area Major Components of HVAC Systems (Continued)

d. Fume hood filter units

1. Tag number	WEA-FU-2A WEA-FU-2B WEA-FU-2C	WEA-FU-4 WEA-FU-5	WEA-FU-6
2. Number of units	3	2	1
3. Capacity (scfm)	1850	1850	3700
4. Fan type	Centrifugal direct drive	Centrifugal direct drive	Centrifugal direct drive
5. Prefilter	Replaceable viscous impingement type	Replaceable viscous impingement type	Replaceable viscous impingement type
6. HEPA filter	Glass media, water repellent and fire resistant	Glass media, water repellent and fire resistant	Glass media, water repellent and fire resistant
7. HEPA filter efficiency (DOP 0.3 μ particle size)	99.97%	99.97%	99.97%
8. Total static pressure (in., w.g.)	4.5	4.5	4.5
9. Area served	Fume hood radio chem labs	Fume hood instrument shop	Fume hood sample room

e. Water chillers

1. Tag number	WCH-CR-51A, WCH-CR-51B
2. Number of units	2 (1 standby)
3. Nominal capacity	150 tons
4. Chilled water (gpm)	360
5. Chilled water supply temperature	44°F
6. Condenser cooling water source	Plant service water
7. Area served	Main control room, cable spreading room, health physics area, radwaste control, radio chem lab, counting room, and hot instrument shop

Table 9.4-3

Radwaste Building Area Major Components of HVAC Systems (Continued)

f. Offgas charcoal adsorber vault air handling units (spared in place)

1. Tag number	WRA-AH-7A, WRA-AH-8A, WRA-AH-7B, WRA-AH-8B
2. Number of units	4 (2 standby)
3. Drive	V-belt (15 hp motor)
4. Nominal air flow (acfm)	15,000
5. Total cooling capacity at -55°F brine (R-11) temp (MBtu/hr)	155
6. Nominal brine flow (gpm)	150
7. External static pressure (in., w.g.)	1.5

g. Brine chillers (spared in place)

1. Tag number	WRE-CR-7A, WRE-CR-7B
2. Number of units	2 (1 standby)
3. Brine	R-11
4. Brine flow range (gpm)	265
5. Brine inlet and outlet temperature	-51°F and -55°F
6. Nominal capacity (MBtu/hr)	175
7. Condenser cooling water source	Plant service water or chilled water (both physically disconnected from brine chillers)
8. Area served	Offgas charcoal adsorber vault

Table 9.4-4

Turbine Generator Building Major Components of HVAC Systems

a. Heating and ventilating unit (evaporative air washer)

1. Tag number	TOA-HV-1A TOA-HV-1B	TOA-HV-2A TOA-HV-2B
2. Number of units	2	2
3. Nominal air flow (scfm)	80,000	97,000
4. Steam flow (lb/hr)	4530	5570
5. Supply air temperature		
a) Summer	72°F DB (evaporative cooling)	72°F DB (evaporative cooling)
b) Winter	50°F	50°F
6. Fan type	Centrifugal V-belt (125 hp motor)	Centrifugal V-belt (125 hp motor)
7. Number of fans	2 (1 for each unit)	2 (1 for each unit)
8. Total static pressure (in., w.g.)	5.8	4.8

b. Exhaust fans

1. Tag number	TEA-FN-1A, TEA-FN-1B, TEA-FN-1C, TEA-FN-1D
2. Number of fans	4 (one standby)
3. Fan type	Centrifugal SWSI
4. Drive	Direct (200 hp motor)
5. Capacity (acfm)	117,000
6. Total static pressure (in., w.g.)	7.0

Table 9.4-4

Turbine Generator Building Major Components of HVAC Systems (Continued)

c. Boiler room air handling unit

1. Tag number	TOA-AH-51
2. Number of units	1
3. Drive	V-belt (15 hp motor)
4. Nominal air flow (scfm)	15,000
5. Steam flow (lb/hr)	980
6. Total static pressure (in., w.g.)	2.1
7. Area served	Boiler room

d. Local exhaust fans

1. Tag number	TEA-FN-52	TEA-FN-53	TEA-FN-2	TEA-FN-3A TEA-FN-3B
2. Number of units	1	1	1	2
3. Drive	Direct (2 hp motor)	Direct (3/4 hp motor)	Direct (1/4 hp motor)	Direct (2 hp motor)
4. Nominal air flow (scfm)	1350	810	400	9000
5. Total static pressure (in., w.g.)	4 1/2	5/8	3/4	1/4
6. Area served	Fume hood sample room	Sample room	Toilet	Transformer room

Table 9.4-5

Diesel Generator Building Areas Major Components of HVAC Systems

a. Diesel generator building air handling units

1. Tag number	DMA-AH-11 DMA-AH-21 DMA-AH-31	DMA-AH-12 DMA-AH-22 DMA-AH-32	DMA-AH-51
2. Number of units	3	3	1
3. Design air flow per unit (scfm)	36,000	15,000[a]	6000
4. Sensible cooling capacity (Btu/hr)	506,000	210,000	
5. Total static pressure (in., w.g.)	3.57	4.37	2.57
6. Water supply source	Standby service water	Standby service water	
7. Area served	Electrical equipment and generator area (normally standby)	Electrical equipment and generator area (normally standby)	Corridor area

Table 9.4-5

Diesel Generator Building Areas Major Components of HVAC Systems (Continued)

b. Diesel generator building exhaust fans

1. Tag number	DEA-FN-11 DEA-FN-21 DEA-FN-31	DEA-FN-52	DEA-FN-12 DEA-FN-22 DEA-FN-32	DEA-FN-13 DEA-FN-23 DEA-FN-33
2. Number of fans	3	1	3	3
3. Fan type	Vaneaxial	Propeller	Centrifugal SWSI	Centrifugal SWSI
4. Drive	Direct (50 hp motor)	Direct (1.0 hp motor)	Direct (0.5 hp motor)	Direct (1.5 hp motor)
5. Design air flow (scfm)	51,000[a]	2,000	350	300
6. Total pressure (in., w.g.)	4.03	1.07	1.25	0.5
7. Motor type	Totally enclosed air over (TEAO) class F insulated windings, rated for a 50°C ambient temperature		Open drip proof self ventilated type class B insulated windings with a maximum temperature rise of 50°C above ambient	Explosion proof type with class B insulated windings
8. Area served	Diesel generator area	Corridor area	Day tank rooms	Oil pump rooms

[a] Actual air flow of the units is higher and is shown in Figure 9.4-7.

Table 9.4-6

Standby Service Water Pump House Areas
Major Components of HVAC Systems

a. Standby service water pump house supply fans

1. Tag number	POA-FN-2A POA-FN-2B
2. Number of fans	2
3. Fan type and style	Centrifugal SWSI
4. Drive	Direct (2 hp motor)
5. Capacity (scfm)	5000
6. Total static pressure (in., w.g.)	1.0

b. Standby service water pump house fan coil units

1. Tag number	PRA-FC-1A PRA-FC-1B
2. Number of units	2
3. Nominal air flow (scfm) per unit	17,000
4. Sensible cooling capacity (Btu/hr) per unit	404,000
5. Total static pressure (in., w.g.)	1.71
6. Water supply source	Standby service water

Table 9.4-7

Makeup Water Pump House Major Components of HVAC Systems

a. Air handling and fan coil units		
1. Tag number	PMA-AH-81A PMA-AH-81B	PRA-FC-91A PRA-FC-91B
2. Number of units	2	2
3. Air flow per unit (acfm)	8000	16,500
4. Sensible cooling capacity per unit (Btu/hr)	221,000	474,000
5. Total static pressure (in., w.g.)	2.57	2.19
6. Fan motor (hp)	7 1/2	10
7. Area served	Electrical equipment area	Pump area
8. Water supply service	Cooling tower makeup water	Cooling tower makeup water
b. Exhaust fans		
1. Tag number	PEA-FN-81A PEA-FN-81B	PEA-FN-82
2. Number of units	2	1
3. Air flow per unit (scfm)	150	100
4. Total static pressure (in., w.g.)	0.625	0.375
5. Area served	Battery hood exhaust	Toilet room
6. Motor (hp)	1/6	1/8

Table 9.4-8

Circulating Water Pump House
Major Components of HVAC Systems

a. Ventilators

1. Tag number	PEA-FN-51	PEA-FN-52	PEA-RVT-11 PEA-RVT-12 PEA-RVT-13 PEA-RVT-14 PEA-RVT-15 PEA-RVT-16
2. Number of units	1	1	6
3. Rated air flow, (scfm)	4800	250	33,000
4. Total static pressure (in., w.g.)	0.5	1/8	1/8
5. Fan (hp)	2	1/12	7-1/2

b. Air conditioning unit

1. Tag number	PMA-AC-51
2. Number of units	1
3. Rated air flow (scfm)	2000
4. Cooling capacity (Btu/hr)	52,000
5. Heating capacity (Btu/hr)	66,000

Table 9.4-9

Plant Heating Steam System

a. Unit heaters

1. Tag number	TRA-SUH-1	TRA-SUH-2	SRA-SUH-1	WRA-SUH-1	WRA-SUH-3 WRA-SUH-4 WRA-SUH-5
2. Number of units	1	1	1	1	3
3. Heating capacity (mbh)	1410	708	915	1265	204
4. Entering air temperature (°F)	50	50	65	65	65
5. Nominal flow (cfm)	25,000	12,000	15,400	25,000	2250
6. Steam flow (lb/hr)	1540	775	1000	1490	224
7. Area served	Turbine building railroad door	Turbine building truck door	Machine shop truck door	Radwaste building truck door	Radwaste building mechanical equipment room and demineralizer removal area

b. Steam humidifiers

1. Tag number	WOA-HU-4	WOA-HU-5	WMA-HU-6	WOA-HU-9
2. Capacity (lb/hr)	200	95	35	75
3. Area served	Radio chem lab	Hot instrument shop	Radwaste control room	Counting room

Table 9.4-9

Plant Heating Steam System (Continued)

c. Condensate pumps		
1. Tag number	SHCO-CU-1	WHCO-CU-1
2. Unit capacity	15,000	80,000
3. Pumpset capacity (gpm)	22.5	120
4. Discharge pressure (psig)	20	25
5. Area served	Service building	Radwaste building
d. Heat transfer package		
1. Tag number	SHHW-HX-51	
2. Heating capacity (mbh)	1800	
3. Steam flow (lb/hr)	1980	
4. Water flow (gpm)	190	
5. Inlet water temperature	161°F	
6. Outlet water temperature	180°F	
7. Area served	Service building	
e. Reheat Coil		
1. Tag number	ROA-HC-2	
2. Air flow (cfm)	33,200	
3. Steam flow (lb/hr)	2560	
4. Air temperature in	50°F	
5. Air temperature out	115°F	
6. Area served	Reactor building	

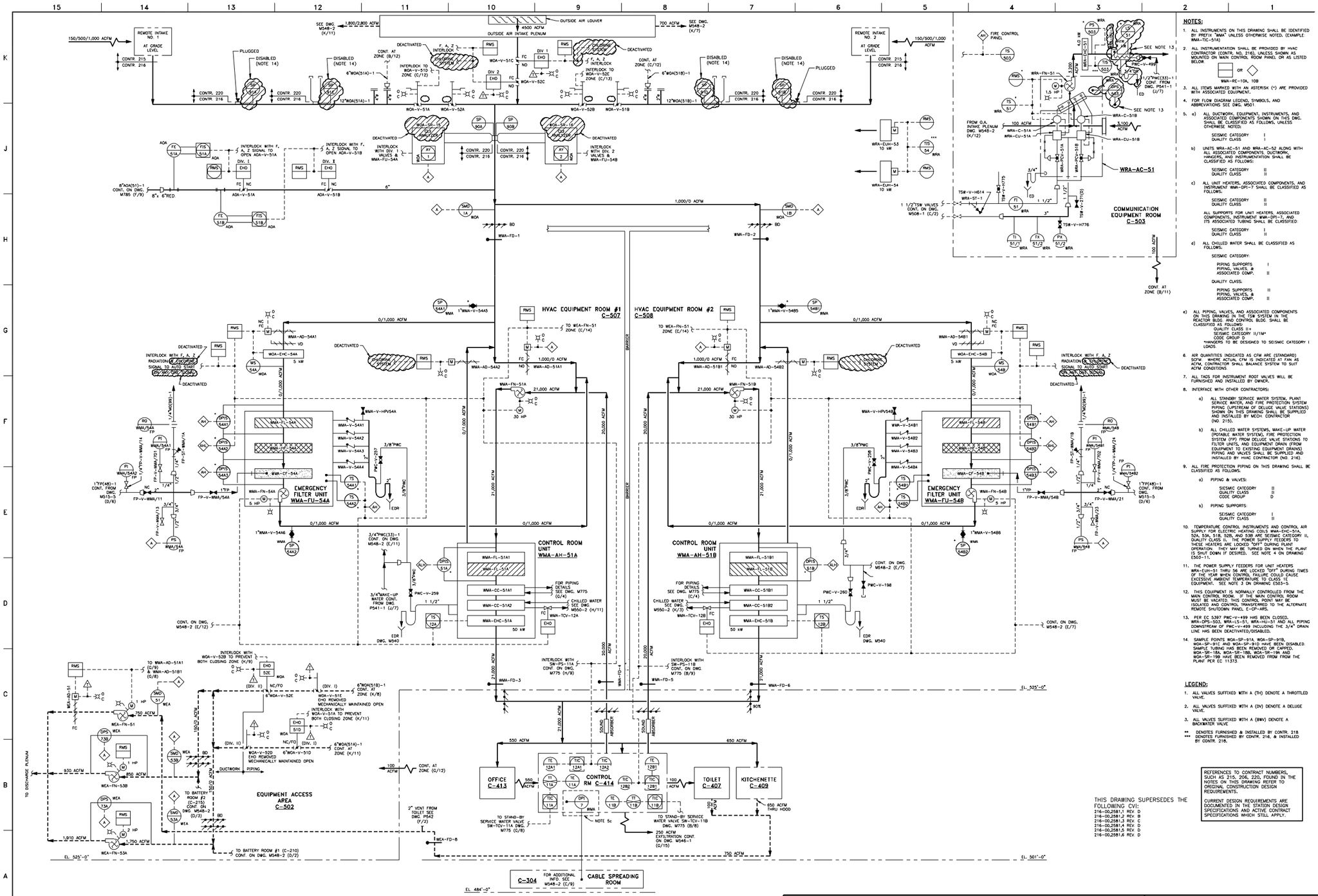

NOTES:

1. ALL INSTRUMENTS ON THIS DRAWING SHALL BE IDENTIFIED BY PREFIX "WMA" UNLESS OTHERWISE NOTED. (EXAMPLE: WMA-TIC-51A)
2. ALL INSTRUMENTATION SHALL BE PROVIDED BY HVAC CONTRACTOR (CONTR. NO. 216), UNLESS SHOWN AS MOUNTED ON MAIN CONTROL ROOM PANEL OR AS LISTED BELOW.

   ▭ OR ◇

   WMA-RE-10A, 10B
3. ALL ITEMS MARKED WITH AN ASTERISK (*) ARE PROVIDED WITH ASSOCIATED EQUIPMENT.
4. FOR FLOW DIAGRAM LEGEND, SYMBOLS, AND ABBREVIATIONS SEE DWG. M501.
5. a) ALL DUCTWORK, EQUIPMENT, INSTRUMENTS, AND ASSOCIATED COMPONENTS SHOWN ON THIS DWG. SHALL BE CLASSIFIED AS FOLLOWS, UNLESS OTHERWISE NOTED:

   SEISMIC CATEGORY I
   QUALITY CLASS I

   b) UNITS WRA-AC-51 AND WRA-AC-52 ALONG WITH ALL ASSOCIATED COMPONENTS, DUCTWORK, HANGERS, AND INSTRUMENTATION SHALL BE CLASSIFIED AS FOLLOWS:

   SEISMIC CATEGORY II
   QUALITY CLASS II

   c) ALL UNIT HEATERS, ASSOCIATED COMPONENTS, AND INSTRUMENT WMA-DPI-7 SHALL BE CLASSIFIED AS FOLLOWS.

   SEISMIC CATEGORY II
   QUALITY CLASS II

   ALL SUPPORTS FOR UNIT HEATERS, ASSOCIATED COMPONENTS, INSTRUMENT WMA-DPI-7, AND ITS ASSOCIATED TUBING SHALL BE CLASSIFIED:

   SEISMIC CATEGORY I
   QUALITY CLASS II

   d) ALL CHILLED WATER SHALL BE CLASSIFIED AS FOLLOWS:

   SEISMIC CATEGORY:

   PIPING SUPPORTS I
   PIPING, VALVES, & ASSOCIATED COMP. II

   QUALITY CLASS.

   PIPING SUPPORTS II
   PIPING, VALVES, & ASSOCIATED COMP. II

   e) ALL PIPING, VALVES, AND ASSOCIATED COMPONENTS ON THIS DRAWING IN THE TSW SYSTEM IN THE REACTOR BLDG. AND CONTROL BLDG. SHALL BE CLASSIFIED AS FOLLOWS:
   QUALITY CLASS II+
   SEISMIC CATEGORY II/I*M*
   CODE GROUP D
   *HANGERS TO BE DESIGNED TO SEISMIC CATEGORY I LOADS.
6. AIR QUANTITIES INDICATED AS CFM ARE (STANDARD) SCFM. WHERE ACTUAL CFM IS INDICATED AT FAN AS ACFM, CONTRACTOR SHALL BALANCE SYSTEM TO SUIT ACFM CONDITIONS.
7. ALL TAGS FOR INSTRUMENT ROOT VALVES WILL BE FURNISHED AND INSTALLED BY OWNER.
8. INTERFACE WITH OTHER CONTRACTORS:

   a) ALL STANDBY SERVICE WATER SYSTEM, PLANT SERVICE WATER, AND FIRE PROTECTION SYSTEM PIPING (UPSTREAM OF DELUGE VALVE STATIONS) SHOWN ON THIS DRAWING SHALL BE SUPPLIED AND INSTALLED BY MECH. CONTRACTOR (NO. 215).

   b) ALL CHILLED WATER SYSTEMS, MAKE-UP WATER (POTABLE WATER SYSTEM), FIRE PROTECTION SYSTEM (FP) FROM DELUGE VALVE STATIONS TO FILTER UNITS, AND EQUIPMENT DRAIN (FROM EQUIPMENT TO EXISTING EQUIPMENT DRAINS) PIPING AND VALVES SHALL BE SUPPLIED AND INSTALLED BY HVAC CONTRACTOR (NO. 216).
9. ALL FIRE PROTECTION PIPING ON THIS DRAWING SHALL BE CLASSIFIED AS FOLLOWS.

   a) PIPING & VALVES:

   SIESMIC CATEGORY II
   QUALITY CLASS II
   CODE GROUP D

   b) PIPING SUPPORTS:

   SEISMIC CATEGORY I
   QUALITY CLASS II
10. TEMPERATURE CONTROL INSTRUMENTS AND CONTROL AIR SUPPLY FOR ELECTRIC HEATING COILS WMA-EHC-51A, 52A, 53A, 51B, 52B, AND 53B ARE SEISMIC CATEGORY II, QUALITY CLASS II. THE POWER SUPPLY TO THESE HEATERS ARE LOCKED "OFF" DURING PLANT OPERATION. THEY MAY BE TURNED ON WHEN THE PLANT IS SHUT DOWN IF DESIRED. SEE NOTE 4 ON DRAWING E503-11.
11. THE POWER SUPPLY FEEDERS FOR UNIT HEATERS WMA-EUH-51 THRU 56 ARE LOCKED "OFF" DURING TIMES OF THE YEAR WHEN CONTROL FAILURE COULD CAUSE EXCESSIVE AMBIENT TEMPERATURE TO CLASS 1E EQUIPMENT. SEE NOTE 3 ON DRAWING E503-5.
12. THIS EQUIPMENT IS NORMALLY CONTROLLED FROM THE MAIN CONTROL ROOM. IF THE MAIN CONTROL ROOM MUST BE VACATED, THIS CONTROL POINT MAY BE ISOLATED AND CONTROL TRANSFERRED TO THE ALTERNATE REMOTE SHUTDOWN PANEL C-CP-ARS.
13. PER EC 5397 PWC-V-499 HAS BEEN CLOSED. WRA-DPS-503, WRA-LS-51, WRA-HU-51 AND ALL PIPING DOWNSTREAM OF PWC-V-499 INCLUDING THE 3/4" DRAIN LINE HAS BEEN DEACTIVATED/DISABLED.
14. SAMPLE POINTS WOA-SP-91A, WOA-SP-91B, WOA-SP-91C, AND WOA-SP-91D HAVE BEEN DISABLED. SAMPLE TUBING HAS BEEN REMOVED OR CAPPED. WOA-SR-18A, WOA-SR-18B, WOA-SR-19A AND WOA-SR-19B HAVE BEEN REMOVED FROM THE PLANT PER EC 11373.

LEGEND:

1. ALL VALVES SUFFIXED WITH A (TH) DENOTE A THROTTLED VALVE.
2. ALL VALVES SUFFIXED WITH A (DV) DENOTE A DELUGE VALVE.
3. ALL VALVES SUFFIXED WITH A (BWV) DENOTE A BACKWATER VALVE.

** DENOTES FURNISHED & INSTALLED BY CONTR. 215.
*** DENOTES FURNISHED BY CONTR. 216, & INSTALLED BY CONTR. 215.

REFERENCES TO CONTRACT NUMBERS, SUCH AS 215, 206, 220, FOUND IN THE NOTES ON THIS DRAWING REFER TO ORIGINAL CONSTRUCTION DESIGN REQUIREMENTS.

CURRENT DESIGN REQUIREMENTS ARE DOCUMENTED IN THE STATION DESIGN SPECIFICATIONS AND ACTIVE CONTRACT SPECIFICATIONS WHICH STILL APPLY.

THIS DRAWING SUPERSEDES THE FOLLOWING CVI:
216-00.2581,1 REV. D
216-00.2581,2 REV. B
216-00.2581,3 REV. C
216-00.2581,4 REV. D
216-00.2581,5 REV. D
216-00.2581,6 REV. D

Columbia Generating Station
Final Safety Analysis Report

HVAC for Control and Switchgear Rooms
Radwaste Building

Draw. No. M548-1	Rev. 103	Figure 9.4-1.1

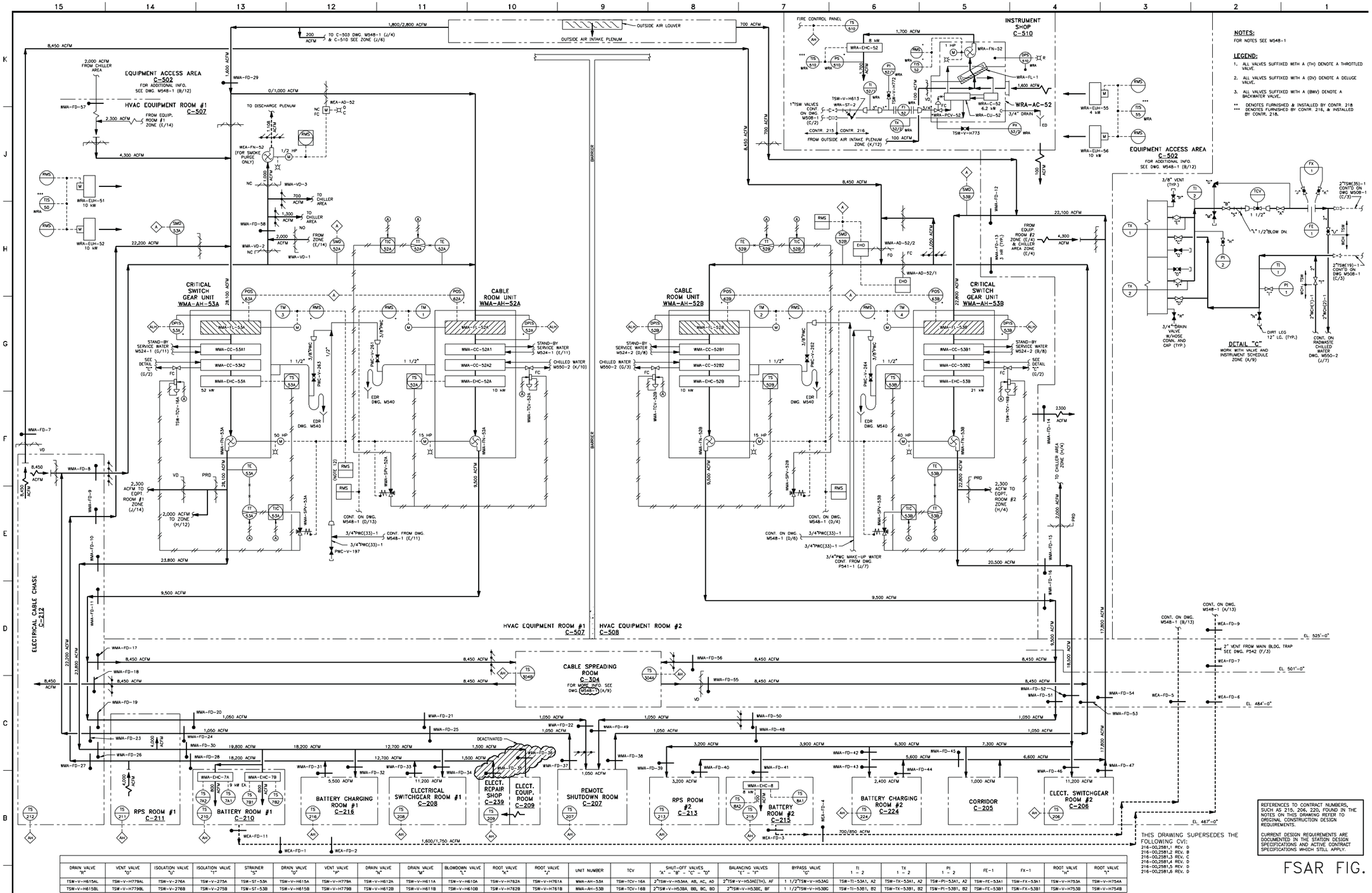

DRAIN VALVE "R"	VENT VALVE "G"	ISOLATION VALVE "J"	ISOLATION VALVE "T"	STRAINER "S"	DRAIN VALVE "Q"	VENT VALVE "P"	DRAIN VALVE "N"	DRAIN VALVE "M"	BLOWDOWN VALVE "L"	ROOT VALVE "K"	ROOT VALVE "J"	UNIT NUMBER	TCV	SHUT-OFF VALVES "A" - "B" - "C" - "D"	BALANCING VALVES "E" - "F"	BYPASS VALVE "G"	TI 1 - 2	TX 1 - 2	PI 1 - 2	FE-1	FX-1	ROOT VALVE "H"	ROOT VALVE "I"
TSW-V-H615AL	TSW-V-H779AL	TSW-V-276A	TSW-V-275A	TSW-ST-53A	TSW-V-H615A	TSW-V-H779A	TSW-V-H612A	TSW-V-H611A	TSW-V-H610A	TSW-V-H762A	TSW-V-H761A	WMA-AH-53A	TSW-TCV-16A	2"TSW-V-H53AA, AB, AC, AD	2"TSW-V-H53AE(TH), AF	1 1/2"TSW-V-H53AG	TSW-TI-53A1, A2	TSW-TX-53A1, A2	TSW-PI-53A1, A2	TSW-FE-53A1	TSW-FX-53A1	TSW-V-H753A	TSW-V-H754A
TSW-V-H615BL	TSW-V-H779BL	TSW-V-276B	TSW-V-275B	TSW-ST-53B	TSW-V-H615B	TSW-V-H779B	TSW-V-H612B	TSW-V-H611B	TSW-V-H610B	TSW-V-H762B	TSW-V-H761B	WMA-AH-53B	TSW-TCV-16B	2"TSW-V-H53BA, BB, BC, BD	2"TSW-V-H53BE, BF	1 1/2"TSW-V-H53BG	TSW-TI-53B1, B2	TSW-TX-53B1, B2	TSW-PI-53B1, B2	TSW-FE-53B1	TSW-FX-53B1	TSW-V-H753B	TSW-V-H754B

Columbia Generating Station
Final Safety Analysis Report

HVAC for Control and Switchgear Rooms
Radwaste Building

Draw. No. M548-2	Rev. 9	Figure 9.4-1.2

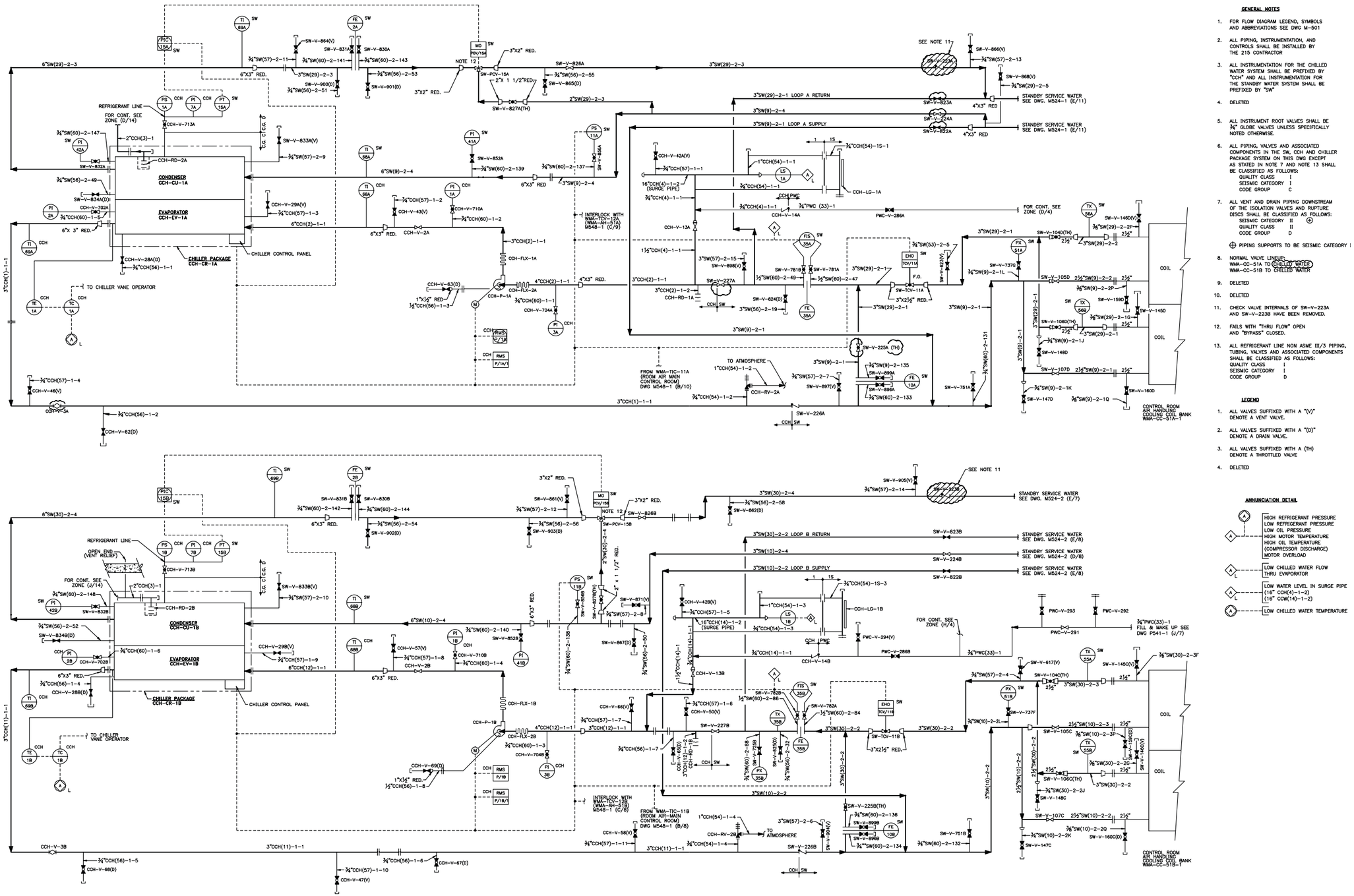

GENERAL NOTES

1. FOR FLOW DIAGRAM LEGEND, SYMBOLS AND ABBREVIATIONS SEE DWG M-501
2. ALL PIPING, INSTRUMENTATION, AND CONTROLS SHALL BE INSTALLED BY THE 215 CONTRACTOR
3. ALL INSTRUMENTATION FOR THE CHILLED WATER SYSTEM SHALL BE PREFIXED BY "CCH" AND ALL INSTRUMENTATION FOR THE STANDBY WATER SYSTEM SHALL BE PREFIXED BY "SW"
4. DELETED
5. ALL INSTRUMENT ROOT VALVES SHALL BE ¾" GLOBE VALVES UNLESS SPECIFICALLY NOTED OTHERWISE.
6. ALL PIPING, VALVES AND ASSOCIATED COMPONENTS IN THE SW, CCH AND CHILLER PACKAGE SYSTEM ON THIS DWG EXCEPT AS STATED IN NOTE 7 AND NOTE 13 SHALL BE CLASSIFIED AS FOLLOWS:
   QUALITY CLASS I
   SEISMIC CATEGORY I
   CODE GROUP C
7. ALL VENT AND DRAIN PIPING DOWNSTREAM OF THE ISOLATION VALVES AND RUPTURE DISCS SHALL BE CLASSIFIED AS FOLLOWS:
   SEISMIC CATEGORY II ⊕
   QUALITY CLASS II
   CODE GROUP D
   ⊕ PIPING SUPPORTS TO BE SEISMIC CATEGORY I
8. NORMAL VALVE LINEUP:
   WMA-CC-51A TO CHILLED WATER
   WMA-CC-51B TO CHILLED WATER
9. DELETED
10. DELETED
11. CHECK VALVE INTERNALS OF SW-V-223A AND SW-V-223B HAVE BEEN REMOVED.
12. FAILS WITH "THRU FLOW" OPEN AND "BYPASS" CLOSED.
13. ALL REFRIGERANT LINE NON ASME III/3 PIPING, TUBING, VALVES AND ASSOCIATED COMPONENTS SHALL BE CLASSIFIED AS FOLLOWS:
    QUALITY CLASS I
    SEISMIC CATEGORY I
    CODE GROUP D

LEGEND

1. ALL VALVES SUFFIXED WITH A "(V)" DENOTE A VENT VALVE.
2. ALL VALVES SUFFIXED WITH A "(D)" DENOTE A DRAIN VALVE.
3. ALL VALVES SUFFIXED WITH A (TH) DENOTE A THROTTLED VALVE
4. DELETED

ANNUNCIATION DETAIL

- A — HIGH REFRIGERANT PRESSURE; LOW REFRIGERANT PRESSURE; LOW OIL PRESSURE; HIGH MOTOR TEMPERATURE; HIGH OIL TEMPERATURE (COMPRESSOR DISCHARGE); MOTOR OVERLOAD
- A L — LOW CHILLED WATER FLOW THRU EVAPORATOR
- A L — LOW WATER LEVEL IN SURGE PIPE (16" CCH(4)-1-2; 16" CCW(14)-1-2)
- A — LOW CHILLED WATER TEMPERATURE

Columbia Generating Station
Final Safety Analysis Report

Emergency Chilled Water Piping System Control Room

Draw. No. M775	Rev. 30	Figure 9.4.1-3

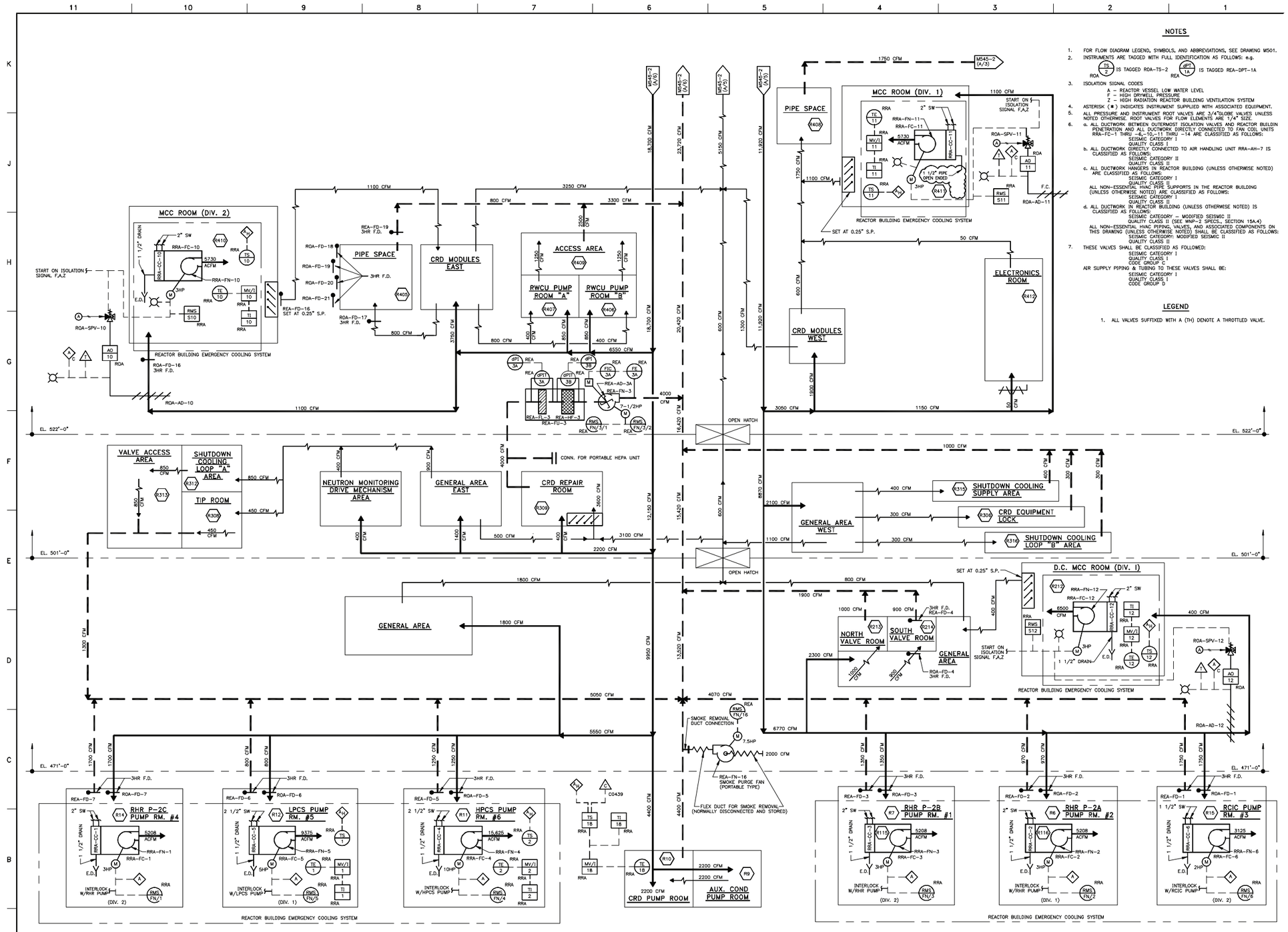

Columbia Generating Station
Final Safety Analysis Report

HVAC Systems – Reactor Building

Draw. No. M545-1	Rev. 73	Figure 9.4-2.1

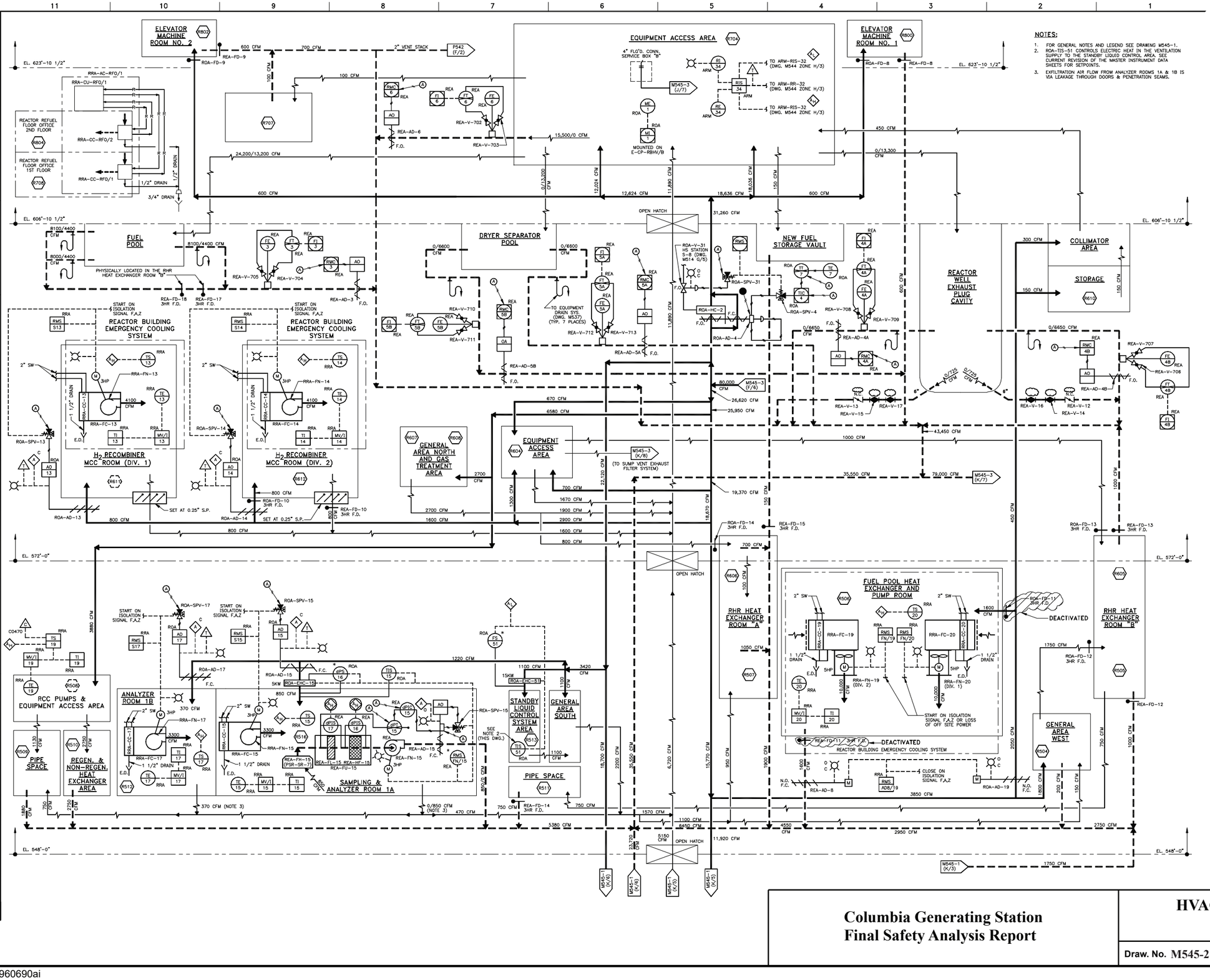

NOTES:

1. FOR GENERAL NOTES AND LEGEND SEE DRAWING M545-1.
2. ROA-TIS-51 CONTROLS ELECTRIC HEAT IN THE VENTILATION SUPPLY TO THE STANDBY LIQUID CONTROL AREA. SEE CURRENT REVISION OF THE MASTER INSTRUMENT DATA SHEETS FOR SETPOINTS.
3. EXFILTRATION AIR FLOW FROM ANALYZER ROOMS 1A & 1B IS VIA LEAKAGE THROUGH DOORS & PENETRATION SEAMS.

Columbia Generating Station
Final Safety Analysis Report

HVAC Systems – Reactor Building

Draw. No. M545-2	Rev. 14	Figure 9.4-2.2

NOTES

1. FOR GENERAL NOTES AND LEGEND SEE DRAWING M545-1.
2. SPV IS SIZED FOR A MINIMUM CV = 13 AND THE AIR LINE TO THE VALVE IS 1".
3. EXHAUST FANS REA-FN-1A/1B ARE CAPABLE OF EXHAUSTING 105,950 CFM FOR MAINTAINING 0.25" W.G. NEGATIVE PRESSURE IN THE BUILDING.
4. INSTALL THIS FILTER ACCORDING TO ABNORMAL CONDITION PROCEDURE ABN-ASH, "ASH FALL".
5. THIS EQUIPMENT DRAIN ROUTES TO FDR SUMP R-4 (SEE M537 & M539)

SUMP VENT EXHAUST FILTER SYSTEM
(PIPE MATERIAL ONLY DESIGNATED AS "SVT")

MAIN STEAM TUNNEL
EL. 501'-0"

RAILROAD LOCK
EL. 441'-0"

FSAR FIG.

Columbia Generating Station
Final Safety Analysis Report

HVAC Systems – Reactor Building

Draw. No. M545-3	Rev. 26	Figure 9.4-2.3

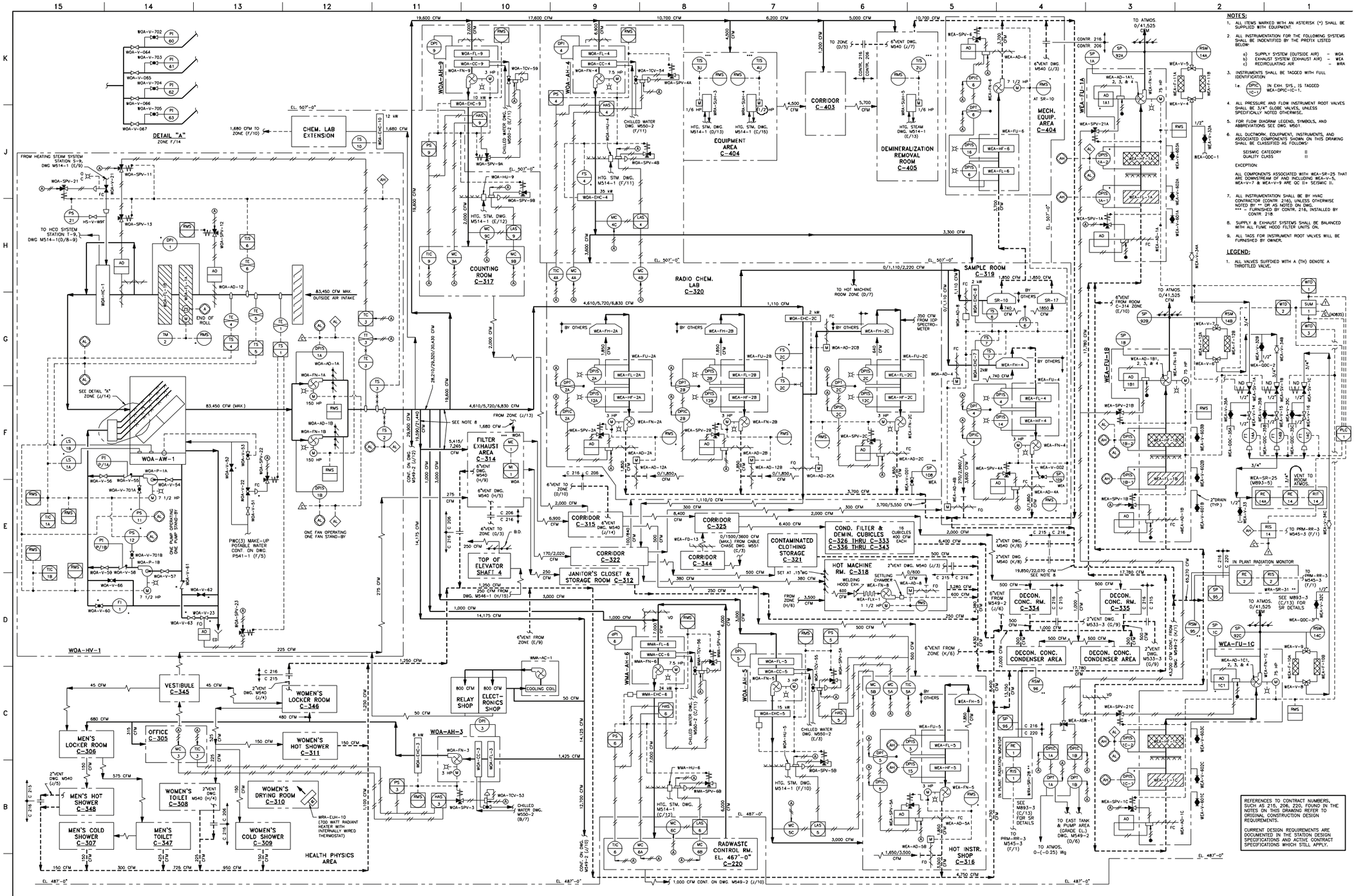

Columbia Generating Station
Final Safety Analysis Report

HVAC Systems – Radwaste Building

Draw. No. M549-1	Rev. 63	Figure 9.4-3.1

NOTES:
FOR GENERAL NOTES AND LEGEND SEE M549-1.

CORRIDOR OUTSIDE RADWASTE CONTROL ROOM C-202
EVAPORATOR BOTTOM RECYCLE PUMP C-232
EVAPORATOR BOTTOM RECYCLE PUMP C-233
FILTER VALVE AND PUMP ROOM (EAST & WEST) C-217 THRU C-219
CORRIDOR OUTSIDE PRECOAT AREA C-222
PRECOAT ROOM C-221
CF-TK-24A DWG. M533-2 (J/14)
CF-TK-24B DWG. M533-2 (J/12)
CONTR. 216
CONTR. 215
CONTR. 206
CONTR. 216
CONT. FROM DWG. M549-1 (A/8)
CONT. FROM DWG. M549-1 (B/9)
CONT. ON DWG. M549-1 (D/4)
CONT. ON DWG. M549-1 (D/3)
6"VENT M540 (G/11)
CORRIDOR BETWEEN VALVE AREA & ACCESS AREA C-218
CONTAMINATED TOOL ROOM C-225
CENTRIFUGE ROOM ENCLOSURE C-227
DECONTAMINATION FACILITY C-226
SEE DWG. M920 (K/5) FOR DETAILS
C-234
MWR-TK-27 DWG. M536 (K/3)
CENTRIFUGE ROOM ENCLOSURE C-228
C-204
OFF GAS EQUIP. ROOM EL. 452'-0" C-141
VESTIBULE EL. 452'-0" C-142
OFF GAS FILTER ROOM EL. 452'-0" C-140
OFF GAS FILTER ROOM EL. 452'-0" C-143
OFF GAS FILTER ROOM EL. 452'-0" C-139
OFF GAS EQUIP. REMOVAL AREA C-229
ELEVATOR MACHINE ROOM C-231
RWP STORAGE ROOM EL. 476'-0" C-203
WASTE MIXING TANK ROOM EL. 452'-0" C-132
DRUM/CASK OPERATING AREA C-127
SUMP W-5
EQUIPMENT ACCESS AREA INCLUDING TRUCK AREA C-126
WRA-SUH-1
BALER
DRUM/CASK STORAGE AREA EL. 435'-0" C-128
DECONTAMINATION AREA C-124
BLIND FLANGE FOR FLEX DUCT CONN. FROM CONTROL BLDG.
WEA-FN-7
SMOKE PURGE FAN FOR LOCATION SEE DWG. M825 (E/3)
25 HP
REFRIG. EQUIPMENT AREA C-105
SEE DWG. M555 (D/10) FOR OFF GAS CHARCOAL ADSORBER ROOM REFRIGERATION SYSTEM
PUMP & TANK AREA C-106
EDR-TK-5 DWG. M532 (E/8)
SUMP W-1 DWG. M540 (C/14)
TANK CORRIDOR C-106
FROM HEATING STEAM SYS. DWG. M514-1 (C/9)
TO ATMOS.
VESTIBULE C-102
VALVE ROOM C-104
DRYER EQUIPMENT ROOM C-131
DRYER EQUIPMENT ROOM C-130
COOLER & MOISTURE EQUIPMENT ROOM C-103
PUMP CORRIDOR C-125
TANK ROOM C-108
PUMP AREA C-125
SHIELDED SUMP W-5
TANK ROOM C-109
CPR-TK-92A DWG. M534 (D/7)
CPR-TK-92B DWG. M534 (D/6)
SHIELDED SUMP W-2
TANK ROOM C-110
CPR-TK-14 DWG. M534 (D/11)
TANK ROOM C-111
EDR-TK-1 DWG. M532 (D/10)
TANK ROOM C-112
FDR-TK-22 DWG. M531 (D/8)
TANK ROOM C-113
RWCU-TK-104A DWG. M523-3 (D/11)
RWCU-TK-104B DWG. M523-3 (D/9)
TANK & PUMP ROOM C-116
MWR-TK-8A DWG. M533-1 (F/14)
MWR-TK-8B DWG. M533-1 (F/12)
MWR-TK-23A DWG. M533-1 (F/8)
MWR-TK-23B DWG. M533-1 (F/5)
SHIELDED SUMP W-4
PUMP AREA C-114
TANK ROOM C-117
MWR-TK-31A DWG. M533-3 (C/5)
TANK ROOM C-118
MWR-TK-31B DWG. M533-3 (C/3)
TO DIESEL GENERATOR CABLE COOLING AIR HANDLING UNIT AREA, RM. D-113 DWG. M551 (E/3)
FROM EXHAUST FAN DIFFERENTIAL PRESSURE TRANSMITTERS DWG. M549-1 (B/4)

REFERENCES TO CONTRACT NUMBERS, SUCH AS 215, 206, 220, FOUND IN THE NOTES ON THIS DRAWING REFER TO ORIGINAL CONSTRUCTION DESIGN REQUIREMENTS.

CURRENT DESIGN REQUIREMENTS ARE DOCUMENTED IN THE STATION DESIGN SPECIFICATIONS AND ACTIVE CONTRACT SPECIFICATIONS WHICH STILL APPLY.

Columbia Generating Station
Final Safety Analysis Report

HVAC Systems – Radwaste Building

Draw. No. M549-2	Rev. 2	Figure 9.4-3.2

GENERAL NOTES

1. FOR FLOW DIAGRAM LEGEND, SYMBOLS AND ABBREVIATIONS SEE DWG. M501.
2. ALL INSTRUMENTATION AND CONTROLS ON THIS DRAWING SHALL BE IDENTIFIED BY PREFIX "WCH" UNLESS OTHERWISE NOTED.
   EXAMPLE: PI 55 IS WCH-PI-55
   PI 61 TSW IS TSW-PI-61
3. ALL ITEMS MARKED WITH AN ASTERISK (*) INDICATES SUPPLIED WITH ASSOCIATED EQUIPMENT.
4. ALL PIPING, PIPING SUPPORTS, VALVES AND ASSOCIATED COMPONENTS ON THIS DRAWING SHALL BE CLASSIFIED AS FOLLOWS:

   SEISMIC CATEGORY:

   PIPING SUPPORTS INSIDE CONTROL BLDG. – I
   PIPING SUPPORTS OUTSIDE CONTROL BLDG. – II
   PIPING, VALVES AND ASSOCIATED COMPONENTS – I

   QUALITY CLASS:

   PIPING SUPPORTS INSIDE CONTROL BLDG. – II
   PIPING SUPPORTS OUTSIDE CONTROL BLDG. – II
   PIPING, VALVES AND ASSOCIATED COMPONENTS – II
5. LINES SHOWN { —— R —— } ARE INTERCONNECTING REFRIGERANT LINES PROVIDED BY THE CHILLER MANUFACTURER.
6. ALL PRESSURE AND FLOW INSTRUMENT ROOT VALVES SHALL BE 3/4" GLOBE VALVES UNLESS OTHERWISE NOTED.

INDICATING LIGHTS (WCH-CR-51B)

MO LWF LOP LCWT LRT HRP MHT CBHT

MO —— MOTOR OVERLOAD
LWF —— LOW WATER FLOW
LOP —— LOW OIL PRESSURE
LCWT —— LOW CHILLED WATER TEMPERATURE
LRT —— LOW REFRIGERANT TEMPERATURE
HRP —— HIGH REFRIGERANT PRESSURE
MHT —— MOTOR HIGH TEMPERATURE
CBHT —— COMPRESSOR BEARING HIGH TEMPERATURE

SAFETY INDICATOR PANEL
(BY CHILLER MANUFACTURER)

WCH-CR-51B
MOTOR OVERLOAD
LOW WATER FLOW
LOW OIL PRESSURE
LOW REFRIGERANT TEMPERATURE
HIGH REFRIGERANT PRESSURE
MOTOR HIGH TEMPERATURE
COMPRESSOR BEARING HIGH TEMPERATURE

A — WCH-P-51A (PRESSURE LOW)
WCH-P-51B (PRESSURE LOW)

LEGEND

1. ALL VALVES SUFFIXED WITH A (V) DENOTE A 3/4" VENT VALVE UNLESS OTHERWISE NOTED.
2. ALL VALVES SUFFIXED WITH A (D) DENOTE A 3/4" DRAIN VALVE UNLESS OTHERWISE NOTED.
3. ALL VALVES SUFFIXED WITH A (TH) DENOTE A THROTTLED VALVE.

Columbia Generating Station
Final Safety Analysis Report

HVAC Chilled Water System – Radwaste Building

Draw. No. M550-1 | Rev. 39 | Figure 9.4-4.1

NOTES:

1. FOR GENERAL NOTES AND LEGEND SEE DRAWING M550-1.
2. ALL INSTRUMENTATION ON THIS DRAWING SHALL BE IDENTIFIED BY PREFIX "WCH" UNLESS OTHERWISE NOTED.
   EXAMPLE: PI 54/2 IS WCH-PI-54/2
3. THE EQUIPMENT ASSOCIATED WITH THE OFF-GAS CHARCOAL REFRIGERATION VAULT IS DEACTIVATED AND SPARED IN PLACE SINCE IT IS NOT REQUIRED TO SUPPORT THE DESIGN FUNCTION OF THE OFF-GAS SYSTEM. (REF. BDC 93-0150-0A)

WMA-CC-52A2 CABLE SPREADING ROOM AIR HANDLING UNIT (WMA-AH-52A) SEE DWG. M548-2 (G/10)

WMA-CC-51A2 (UPPER COIL) CONTROL ROOM AIR HANDLING UNIT (WMA-AH-51A) SEE DWG. M548-1 (D/9)

WMA-CC-51A2 (LOWER COIL) CONTROL ROOM AIR HANDLING UNIT (WMA-AH-51A) SEE DWG. M548-1 (D/9)

WOA-CC-4 RADIO CHEMICAL LAB AND SAMPLING ROOM AIR HANDLING UNIT (WOA-AH-4) SEE DWG. M549-1 (J/9)

WOA-CC-9 COUNTING ROOM AIR HANDLING UNIT (WOA-AH-9) SEE DWG. M549-1 (J/10)

WMA-CC-6 RADWASTE CONTROL ROOM AIR HANDLING UNIT (WMA-AH-6) SEE DWG. M549-1 (C/8)

WOA-CC-3 HEALTH PHYSICS ROOM AIR HANDLING UNIT (WOA-AH-3) SEE DWG. M549-1 (B/10)

WMA-CC-51B2 (UPPER COIL) CONTROL ROOM AIR HANDLING UNIT (WMA-AH-51B) SEE DWG. M548-1 (D/8)

WMA-CC-51B2 (LOWER COIL) CONTROL ROOM AIR HANDLING UNIT (WMA-AH-51B) SEE DWG. M548-1 (D/8)

WMA-CC-52B2 CABLE SPREADING ROOM AIR HANDLING UNIT (WMA-AH-52B) SEE DWG. M548-2 (G/9)

WOA-CC-5 HOT INSTRUMENT ROOM AIR HANDLING UNIT (WOA-AH-5) SEE DWG. M549-1 (C/7)

WRE-CU-7A OFF-GAS CHARCOAL ADSORBER ROOM REFRIGERATION CONDENSER

WRE-CU-7B OFF-GAS CHARCOAL ADSORBER ROOM REFRIGERATION CONDENSER

SEE NOTE 3

FOR CONTROL AND INSTRUMENT ARRANGEMENT SEE DWG. M555 (A/12)

FOR CONTROL AND INSTRUMENT ARRANGEMENT SEE DWG. M555 (A/7)

CONT. FROM DWG. M550-1 (G/11)

CONT. ON DWG. M550-1 (E/11)

FOR CONT SEE DETAIL "C" DWG. M548-2 (G/1)

Columbia Generating Station
Final Safety Analysis Report

HVAC Chilled Water System - Radwaste Building

Draw. No. M550-2 | Rev. 5 | Figure 9.4-4-2

Form No. 960690ai

NOTES:

1. FOR FLOW DIAGRAM LEGEND, SYMBOLS, AND ABBREVIATIONS SEE DWG M501.
2. ALL PRESSURE AND FLOW INSTRUMENT ROOT VALVES SHALL BE 3/4" GLOBE VALVES UNLESS OTHERWISE NOTED.
3. ALL INSTRUMENTS ON THIS DRAWING TO BE PREFACED BY "WHI" UNLESS OTHERWISE NOTED.
   i.e. (FS/10) IS TAGGED WRE-FS-10.
4. ORIFICE PLATE FE-32 SHALL BE SQUARE-EDGED ON BOTH SIDES FOR FLOW IN BOTH DIRECTIONS.
5. ALL DUCTWORK, PIPING, VALVES, EQUIPMENT, AND ASSOCIATED COMPONENTS ON THIS DRAWING SHALL BE CLASSIFIED AS FOLLOWS:
   SEISMIC CATEGORY II
   QUALITY CLASS II
6. ALL TAGS FOR INSTRUMENT ROOT VALVES WILL BE FURNISHED AND INSTALLED BY OWNER.
7. * – INSTRUMENTS SUPPLIED WITH EQUIPMENT.
   ** – FURNISHED AND INSTALLED BY 218 CONTR.
   *** – FURNISHED BY 216 CONTR, INSTALLED BY 218 CONTR.
8. THE EQUIPMENT ASSOCIATED WITH THE OFF-GAS CHARCOAL REFRIGERATION VAULT IS DEACTIVATED AND SPARED IN PLACE SINCE IT IS NOT REQUIRED TO SUPPORT THE DESIGN FUNCTION OF THE OFF-GAS SYSTEM. (REF 93-0150-0A)
9. THE EQUIPMENT REFERENCING THIS NOTE HAS BEEN REMOVED FROM THIS DRAWING AND MOVED TO M535-2 ZONE: B/10-12.

LEGEND

1. ALL VALVES SUFFIXED WITH A (TH) DENOTE A TH-ROTTLED VALVE.

REFERENCES TO CONTRACT NUMBERS, SUCH AS 215, 206, 220, FOUND IN THE NOTES ON THIS DRAWING REFER TO ORIGINAL CONSTRUCTION DESIGN REQUIREMENTS.

CURRENT DESIGN REQUIREMENTS ARE DOCUMENTED IN THE STATION DESIGN SPECIFICATIONS AND ACTIVE CONTRACT SPECIFICATIONS WHICH STILL APPLY.

DESCRIPTION

Columbia Generating Station
Final Safety Analysis Report

HVAC Offgas Charcoal Adsorber Vault - Radwaste Building

Draw. No. M555	Rev. 41	Figure 9.4-5

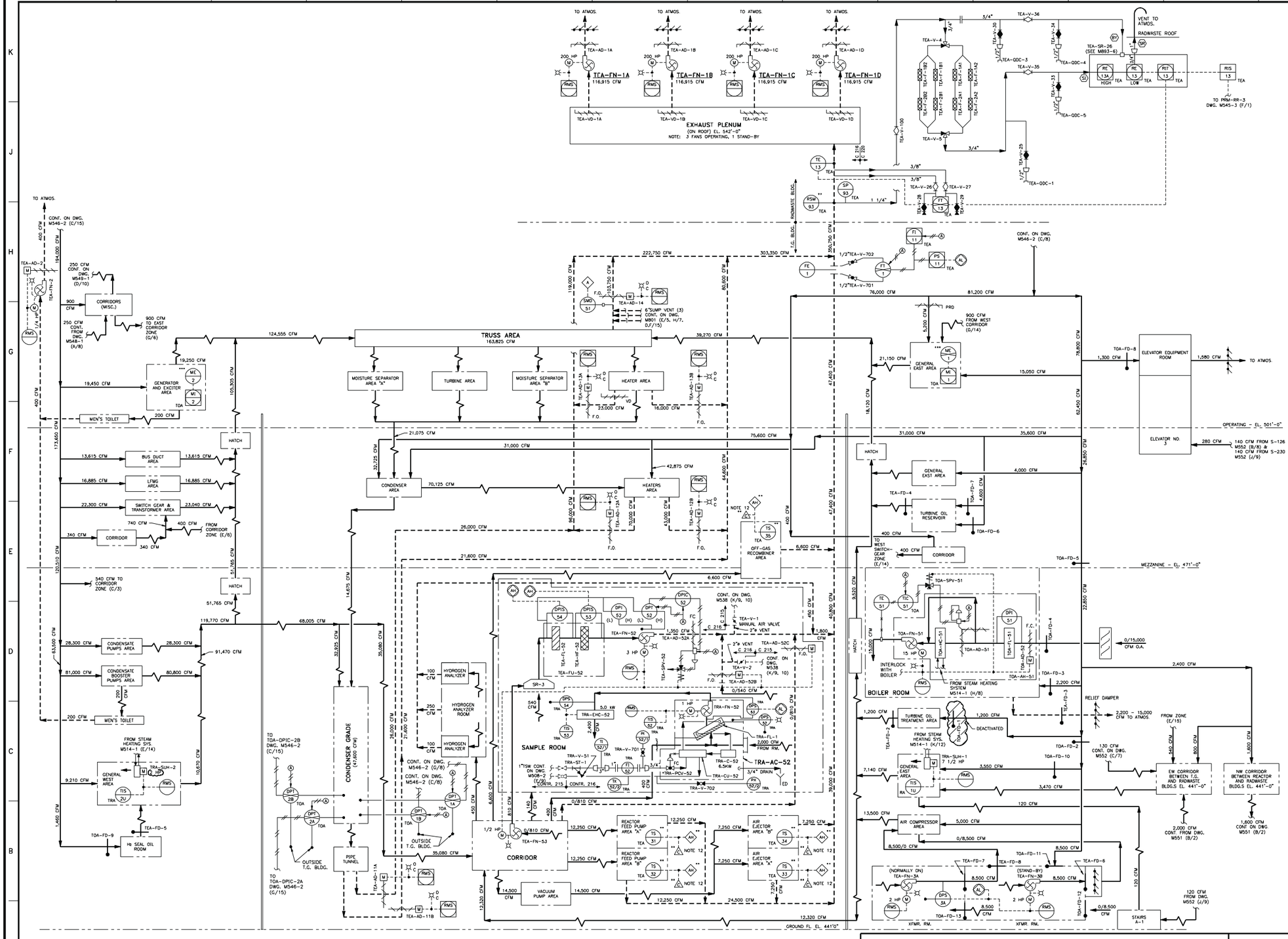

NOTES:

1. FOR FLOW DIAGRAM LEGEND, SYMBOLS, NOTES AND ABBREVIATIONS SEE DWG. M501.
2. INSTRUMENTS SHALL BE TAGGED WITH FULL IDENTIFICATION AS FOLLOWS:
   a) INSTRUMENTS IN SUPPLY SYSTEM
   TC 13A IS TAGGED TOA-TE-13A
   b) INSTRUMENTS IN EXHAUST SYSTEM.
   DPT 1A IS TAGGED TEA-DPT-1A
3. * ASTERISK DENOTES INSTRUMENTS SUPPLIED WITH EQUIP. ** ASTERISKS DENOTE INSTR. SUPPLIED BY OTHERS *** ASTERISKS DENOTE INSTR. FURNISHED BY CONTR. 216, AND INSTALLED BY CONTR 218
4. ALL PRESSURE AND FLOW INSTRUMENT ROOT VALVES SHALL BE 3/4" GLOBE VALVES, UNLESS SPECIFICALLY NOTED OTHERWISE.
5. REFER TO HEATING STEAM FLOW DIAGRAM M514 FOR LINE AND VALVE DESIGNATIONS.
6. DELETED
7. DELETED
8. ALL DUCTWORK, EQUIPMENT, AND ACCESSORIES ON THIS DWG. ARE CLASSIFIED AS FOLLOWS, EXCEPT TOILET EXH:
   SEISMIC CATEGORY II
   QUALITY CLASS II
9. TOILET EXHAUST DUCTWORK, FAN, & ACCESSORIES ARE CLASSIFIED AS FOLLOWS:
   SEISMIC CATEGORY II
   QUALITY CLASS G
10. ALL INSTRUMENTATION SHALL BE FURNISHED AND INSTALLED BY HVAC CONTRACTOR (CONTR. 216), UNLESS OTHERWISE NOTED
11. ALL TAGS FOR INSTRUMENT ROOT VALVES WILL BE FURNISHED AND INSTALLED BY OWNER.
12. THESE COMPUTER INPUT POINTS ARE NOT USED.
13. NOTE TO BALANCING CONTRACTOR:
    a) THE TRANSFER AIR QUANTITIES THRU HATCHES AND OPEN AREAS ARE FOR ESTIMATING BALANCING REQUIREMENTS FOR A ZONE AND FOR ESTIMATING TOTAL EXHAUST QUANTITIES. THE TRANSFER AIR QUANTITIES NEED NOT BE BALANCED, HOWEVER CORRECT FLOW DIRECTION OF TRANSFER AIR SHALL BE ASSURED.
    b) CFM'S INDICATED ARE STANDARD CFM'S. THE EXHAUST CFM'S SHALL BE BALANCED TO ACTUAL CFM'S (ACFM = 1.1 x CFM).
14. INSTALL THESE FILTERS ACCORDING TO ABNORMAL CONDITION PROCEDURE ABN-ASH "ASH FALL."

LEGEND:

1. ALL VALVES SUFFIXED WITH A (TH) DENOTE A THROTTLED VALVE.

REFERENCES TO CONTRACT NUMBERS, SUCH AS 215, 306, 220, FOUND IN THE NOTES ON THIS DRAWING REFER TO ORIGINAL CONSTRUCTION DESIGN REQUIREMENTS.

CURRENT DESIGN REQUIREMENTS ARE DOCUMENTED IN THE STATION DESIGN SPECIFICATIONS AND ACTIVE CONTRACT SPECIFICATIONS WHICH STILL APPLY.

FSAR FIG.

Columbia Generating Station
Final Safety Analysis Report

HVAC Systems – Turbine Generator Building

Draw. No. M546-1	Rev. 56	Figure 9.4-6.1

NOTES:
FOR NOTES 1 THRU 14 SEE M546-1.

LEGEND:
1. ALL VALVES SUFFIXED WITH A (TH) DENOTE A THROTTLED VALVE.

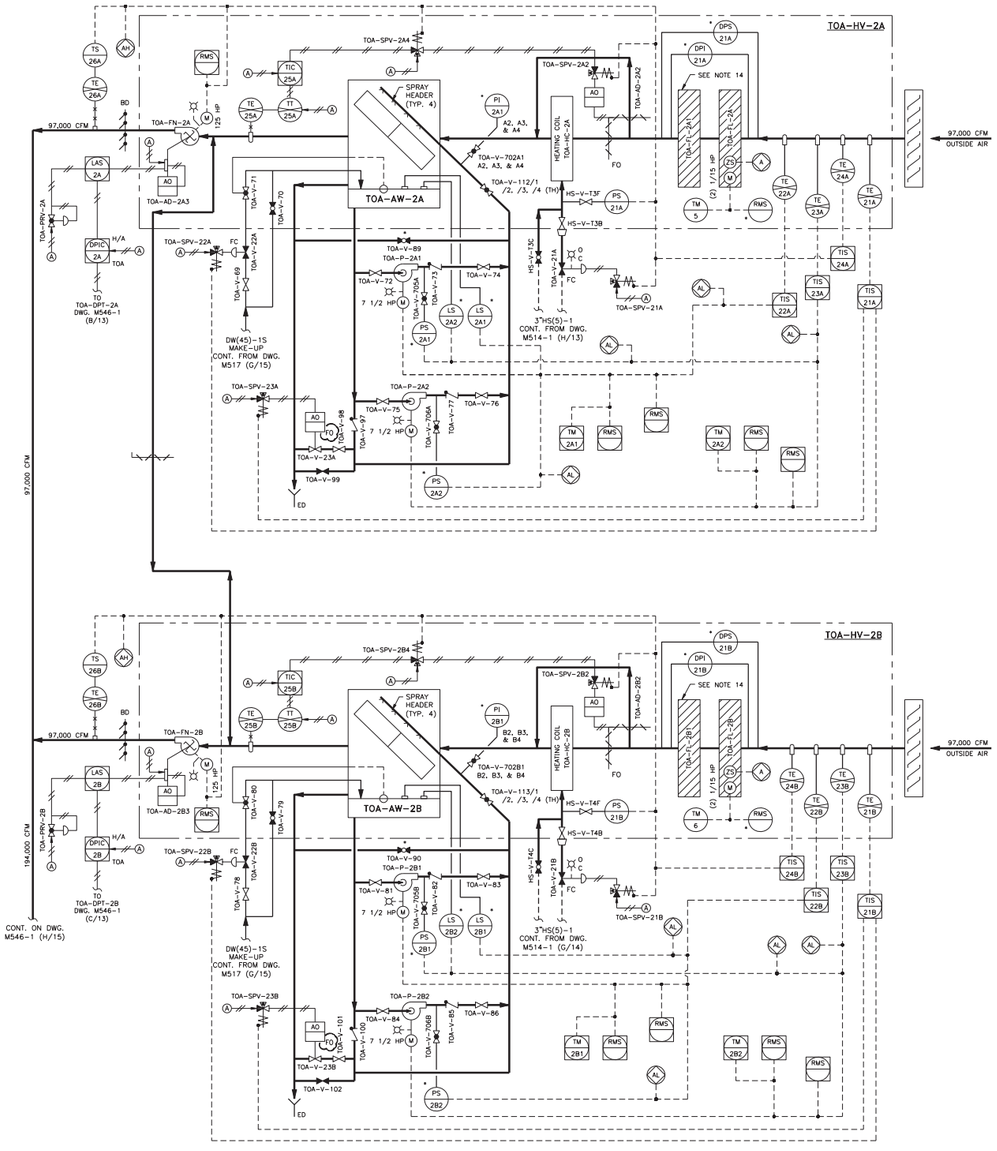

Columbia Generating Station
Final Safety Analysis Report

HVAC Systems – Turbine Generator Building

Draw. No. M546-2	Rev. 1	Figure 9.4-6.2

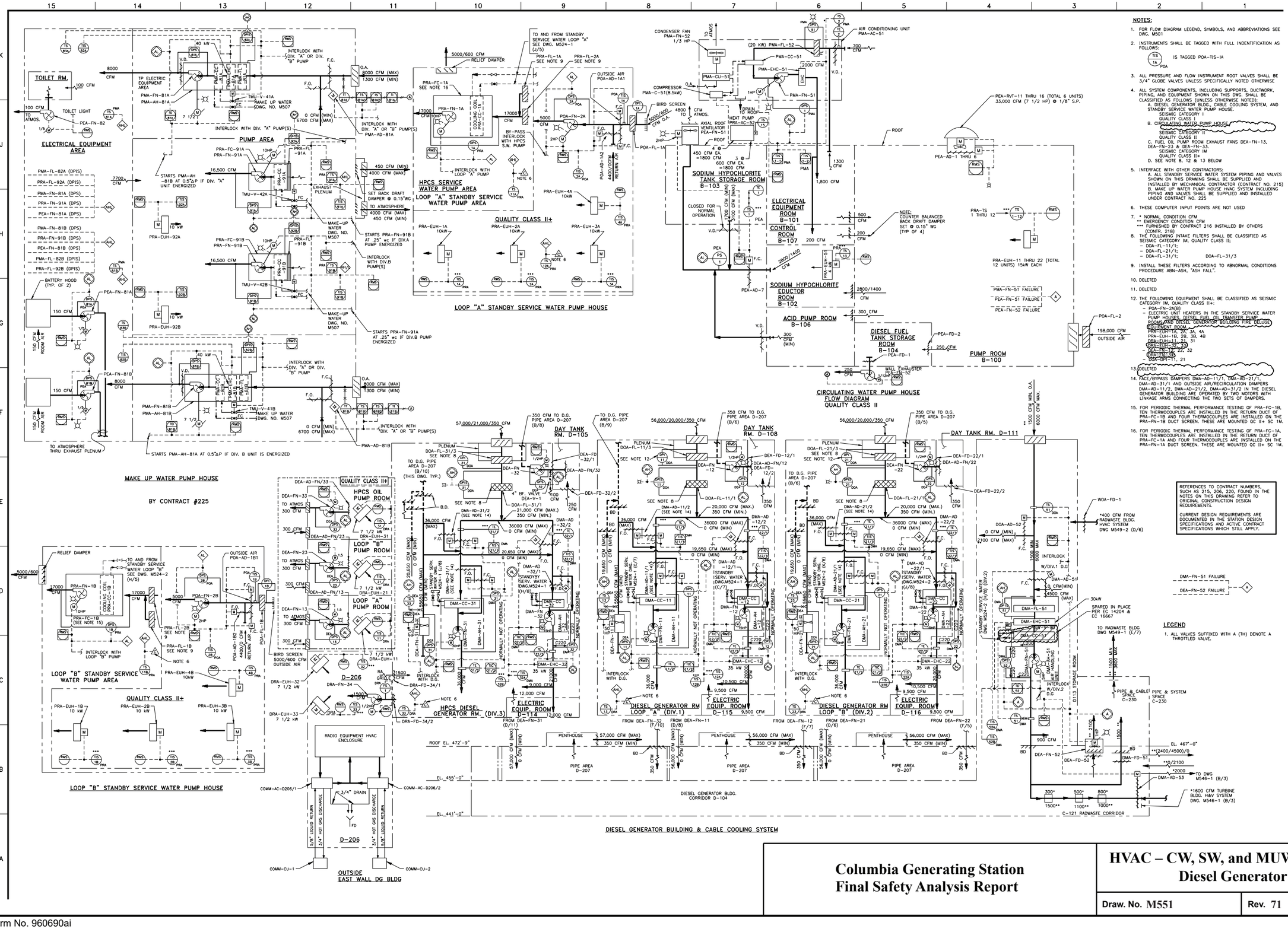

NOTES:

1. FOR FLOW DIAGRAM LEGEND, SYMBOLS, AND ABBREVIATIONS SEE DWG. M501
2. INSTRUMENTS SHALL BE TAGGED WITH FULL INDENTIFICATION AS FOLLOWS:
   115 / 1A / POA — IS TAGGED PRA-TIS-1A
3. ALL PRESSURE AND FLOW INSTRUMENT ROOT VALVES SHALL BE 3/4" GLOBE VALVES UNLESS SPECIFICALLY NOTED OTHERWISE
4. ALL SYSTEM COMPONENTS, INCLUDING SUPPORTS, DUCTWORK, PIPING, AND EQUIPMENT SHOWN ON THIS DWG. SHALL BE CLASSIFIED AS FOLLOWS (UNLESS OTHERWISE NOTED):
   A. DIESEL GENERATOR BLDG., CABLE COOLING SYSTEM, AND STANDBY SERVICE WATER PUMP HOUSE.
      SEISMIC CATEGORY I
      QUALITY CLASS I
   B. CIRCULATING WATER PUMP HOUSE
      SEISMIC CATEGORY II
      QUALITY CLASS II
   C. FUEL OIL PUMP ROOM EXHAUST FANS DEA-FN-13, DEA-FN-23 & DEA-FN-33.
      SEISMIC CATEGORY IM
      QUALITY CLASS II+
   D. SEE NOTE 8, 12 & 13 BELOW
5. INTERFACE WITH OTHER CONTRACTORS:
   A. ALL STANDBY SERVICE WATER SYSTEM PIPING AND VALVES SHOWN ON THIS DRAWING SHALL BE SUPPLIED AND INSTALLED BY MECHANICAL CONTRACTOR (CONTRACT NO. 215)
   B. MAKE UP WATER PUMP HOUSE HVAC SYSTEM INCLUDING PIPING AND VALVES SHALL BE SUPPLIED AND INSTALLED UNDER CONTRACT NO. 225
6. THESE COMPUTER INPUT POINTS ARE NOT USED
7. * NORMAL CONDITION CFM
   ** EMERGENCY CONDITION CFM
   *** FURNISHED BY CONTRACT 216 INSTALLED BY OTHERS (CONTR. 218)
8. THE FOLLOWING INTAKE FILTERS SHALL BE CLASSIFIED AS SEISMIC CATEGORY IM, QUALITY CLASS II:
   - DOA-FL-11/1;
   - DOA-FL-21/1;
   - DOA-FL-31/1; DOA-FL-31/3
9. INSTALL THESE FILTERS ACCORDING TO ABNORMAL CONDITIONS PROCEDURE ABN-ASH, "ASH FALL".
10. DELETED
11. DELETED
12. THE FOLLOWING EQUIPMENT SHALL BE CLASSIFIED AS SEISMIC CATEGORY IM, QUALITY CLASS II+:
    - POA-FN-2A(B)
    - ELECTRIC UNIT HEATERS IN THE STANDBY SERVICE WATER PUMP HOUSES, DIESEL FUEL OIL TRANSFER PUMP ROOMS AND DIESEL GENERATOR BUILDING FIRE DELUGE EQUIPMENT ROOM
      PRA-EUH-1A, 2A, 3A, 4A
      PRA-EUH-1B, 2B, 3B, 4B
      DRA-EUH-11, 21, 31
      DRA-EUH-12, 22, 32
      DRA-FN-13, 23
      - DOA-DPI-11, 21
13. DELETED
14. FACE/BYPASS DAMPERS DMA-AD-11/1, DMA-AD-21/1, DMA-AD-31/1 AND OUTSIDE AIR/RECIRCULATION DAMPERS DMA-AD-11/2, DMA-AD-21/2, DMA-AD-31/2 IN THE DIESEL GENERATOR BUILDING ARE OPERATED BY TWO MOTORS WITH LINKAGE ARMS CONNECTING THE TWO SETS OF DAMPERS.
15. FOR PERIODIC THERMAL PERFORMANCE TESTING OF PRA-FC-1B, TEN THERMOCOUPLES ARE INSTALLED IN THE RETURN DUCT OF PRA-FC-1B AND FOUR THERMOCOUPLES ARE INSTALLED ON THE PRA-FN-1B DUCT SCREEN. THESE ARE MOUNTED QC II+ SC 1M.
16. FOR PERIODIC THERMAL PERFORMANCE TESTING OF PRA-FC-1A, TEN THERMOCOUPLES ARE INSTALLED IN THE RETURN DUCT OF PRA-FC-1A AND FOUR THERMOCOUPLES ARE INSTALLED ON THE PRA-FN-1A DUCT SCREEN. THESE ARE MOUNTED QC II+ SC 1M.

Columbia Generating Station
Final Safety Analysis Report

HVAC – CW, SW, and MUW Pump Houses and Diesel Generator Building

Draw. No. M551	Rev. 71	Figure 9.4-7

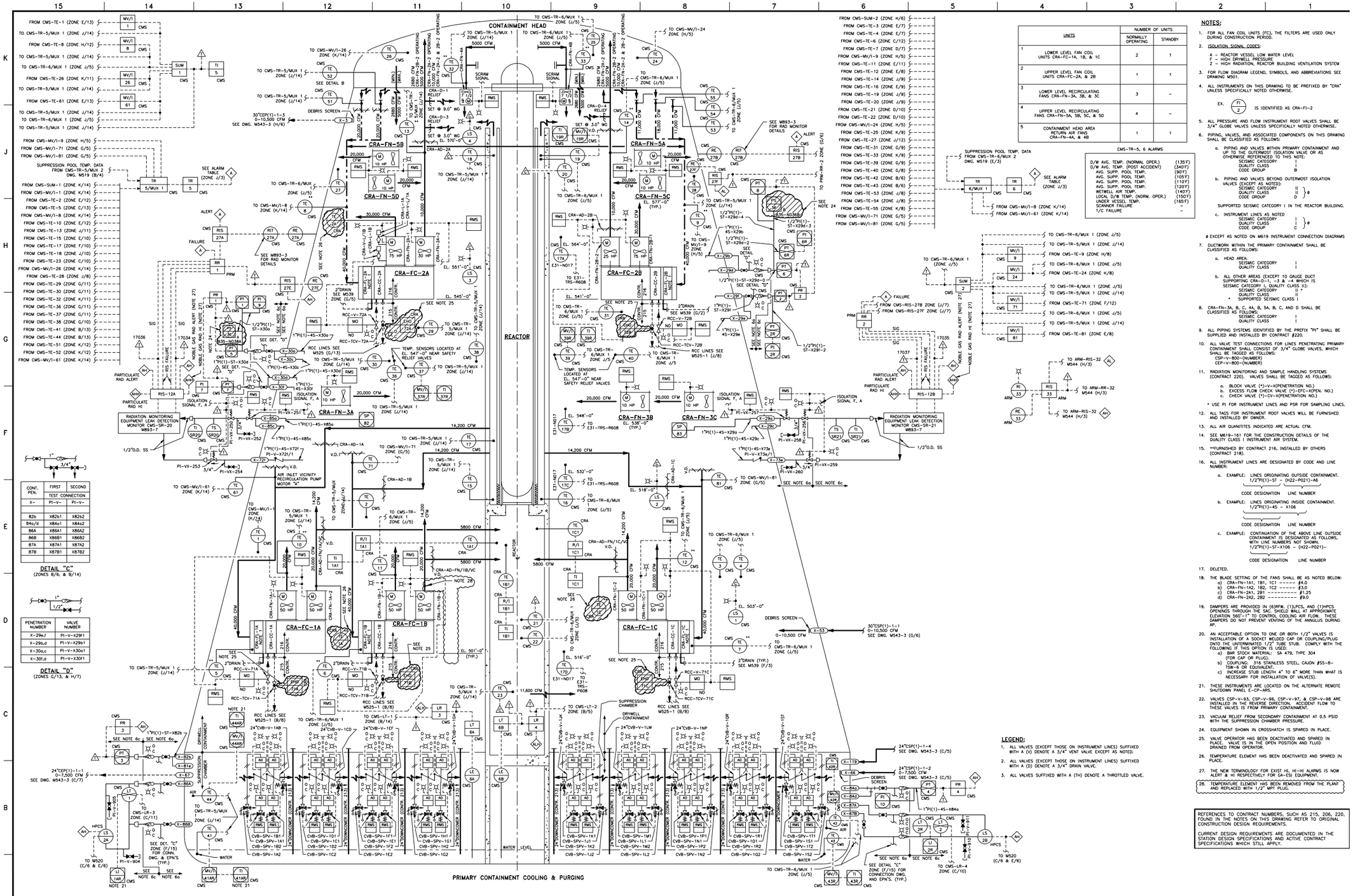
CONTAINMENT HEAD
REACTOR
CRA-FN-5B
CRA-FN-5D
CRA-FN-5A
CRA-FN-5C
CRA-FC-2A
CRA-FC-2B
CRA-FC-3A
CRA-FC-3B
CRA-FC-3C
CRA-FC-1A
CRA-FC-1B
CRA-FC-1C
PRIMARY CONTAINMENT COOLING & PURGING
WATER LEVEL
DRYWELL CONTAINMENT
SUPPRESSION CHAMBER
SUPPRESSION POOL TEMP. DATA FROM CMS-TR-6/MUX 2 DWG. M519 (B/4)
SEE ALARM TABLE (ZONE J/3)
SEE DETAIL B
SEE DET. "D"
SEE DET. "C" ZONE (F/15) FOR CONN. DWG. & EPN'S (TYP.)
SEE NOTE 24
SEE NOTE 25
SEE NOTE 26
SEE NOTE 28
SEE NOTE 6a
SEE NOTE 6c
SEE M893-3 FOR RAD MONITOR DETAILS
SEE M893-4 FOR RAD MONITOR DETAILS
RADIATION MONITORING EQUIPMENT LEAK DETECTION MONITOR CMS-SR-20 M893-7
RADIATION MONITORING EQUIPMENT LEAK DETECTION MONITOR CMS-SR-21 M893-7
AIR INLET VICINITY RECIRCULATION PUMP MOTOR "A"
RCC LINES SEE M525 (G/13)
RCC LINES SEE M525-1 (B/8)
TEMP. SENSORS LOCATED AT EL. 547'-0" NEAR SAFETY RELIEF VALVES
ISOLATION SIGNAL F, A, J
MOBILE GAS AND ALERT (NOTE 27)
PARTICULATE RAD ALERT
PARTICULATE RAD HI
RIS FAILURE
FAILURE
ALERT
SIG
PRM
2"DRAIN SEE M539 ZONE (G/5)
2"DRAIN (TYP.) SEE M539 (F/3)
2"DRAIN SEE M539 (G/2)
RCC-V-72A
RCC-V-72B
RCC-V-71A
RCC-V-71B
RCC-V-71C
RCC-TCV-72A
RCC-TCV-72B
RCC-TCV-71A
RCC-TCV-71B
RCC-TCV-71C
SUPPRESSION POOL TEMP. DATA FROM CMS-TR-6/MUX 2 DWG. M519 (E/3)
CMS-TR-5, 6 ALARMS
D/W AVG. TEMP. (NORMAL OPER.) (135°F)
D/W AVG. TEMP. (POST ACCIDENT) (340°F)
AVG. SUPP. POOL TEMP. (90°F)
AVG. SUPP. POOL TEMP. (105°F)
AVG. SUPP. POOL TEMP. (110°F)
AVG. SUPP. POOL TEMP. (120°F)
WETWELL AIR TEMP. (142°F)
LOCAL D/W TEMP. (NORM. OPER.) (150°F)
UNDER VESSEL TEMP. (165°F)
SCANNER FAILURE –
T/C FAILURE –
DETAIL "C" (ZONES B/6, & B/14)
DETAIL "D" (ZONES G/13, & H/7)
DEBRIS SCREEN
0-10,500 CFM
30"CSP(1)-1-1 0-10,500 CFM SEE DWG. M543-3 (G/6)
24"CSP(1)-1-4 SEE DWG. M543-3 (C/5)
24"CSP(1)-1-2 0-7,500 CFM SEE DWG. M543-3 (C/5)
24"CEP(1)-1-1 0-7,500 CFM SEE DWG. M543-3 (C/7)
TO M520 (C/6 & E/6)
TO CMS-LR-4 ZONE (C/10)
TO ARM-RIS-32 M544 (H/3)
TO ARM-RR-32 M544 (H/3)
TO CMS-LR-3 ZONE (C/11)
TO CMS-TR-5/MUX ZONE (J/14)
TO CMS-TR-6/MUX 1 ZONE (J/5)
TO CMS-TR-5/MUX 1 ZONE (J/14)
TO CMS-TR-6/MUX 1 ZONE (J/14)
TO CMS-MV/I-1 ZONE (K/14)
TO CMS-MV/I-61 ZONE (K/14)
TO CMS-MV/I-81 ZONE (G/5)
TO CMS-MV/I-71 ZONE (G/5)
TO CMS-MV/I-8 ZONE (K/14)
TO CMS-MV/I-26 ZONE (K/14)
TO CMS-TR-6/MUX ZONE (J/5)
TO CMS-TR-6/MUX 1 ZONE (J/5)
TO CMS-MV/I-24 ZONE (H/5)
TO CMS-TR-5/MUX 1 ZONE (J/14)
TO CMS-MV/I-9 ZONE (H/5)
TO CMS-MV/I-24 ZONE (H/5)
TO CMS-MV/I-71 ZONE (G/5)
TO CMS-MV/I-81 ZONE (G/5)
TO CMS-MV/I-1 ZONE (K/14)
TO CMS-MV/I-8 ZONE (K/14)
TO CMS-MV/I-61 ZONE (K/14)
TO CMS-TR-6/MUX 1 ZONE (J/5)
TO CMS-TR-6/MUX 1 ZONE (J/14)
TO CMS-TR-5/MUX 1 ZONE (J/14)
TO CMS-TR-6/MUX 1 ZONE (J/5

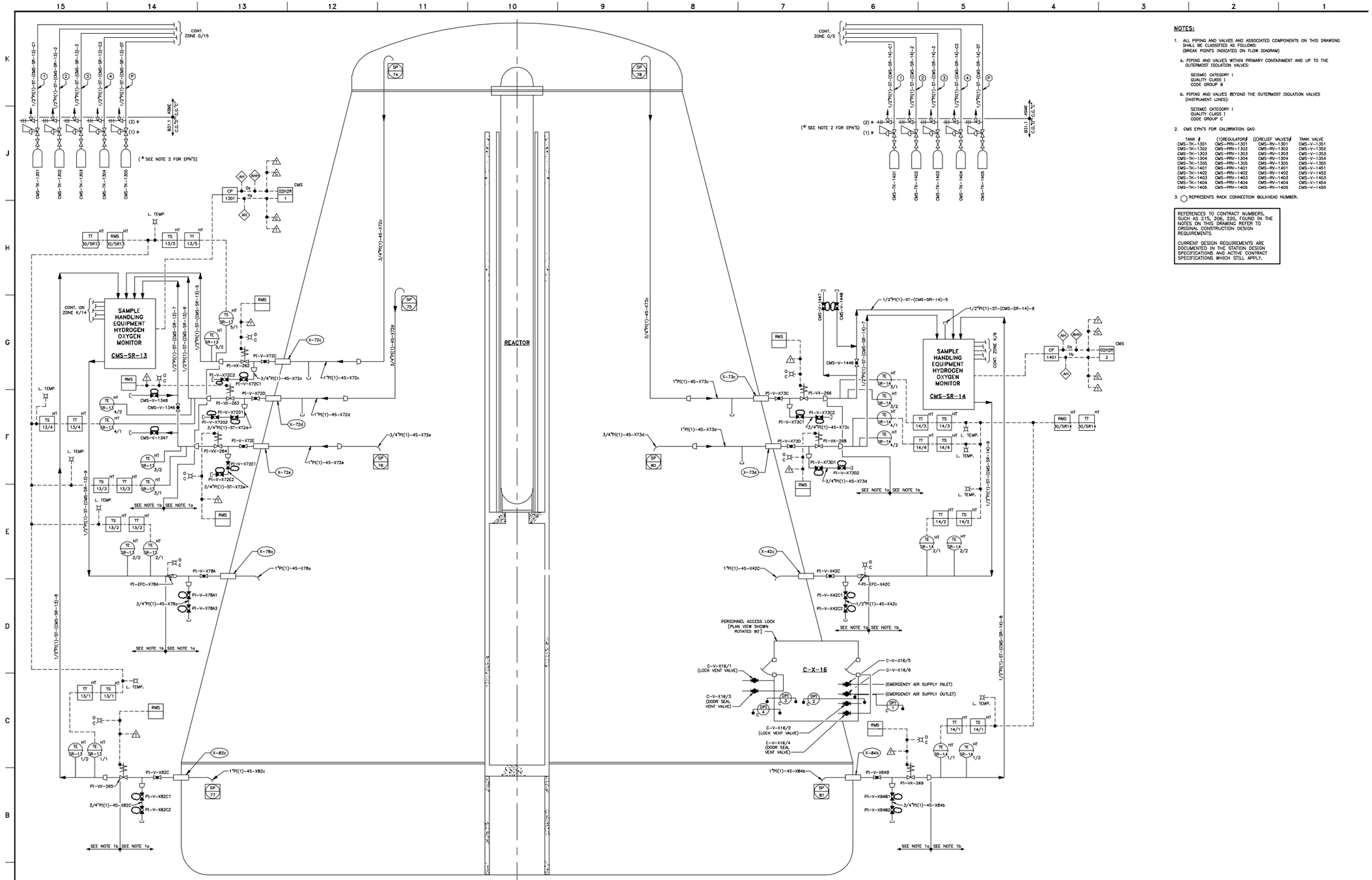

NOTES:

1. ALL PIPING AND VALVES AND ASSOCIATED COMPONENTS ON THIS DRAWING SHALL BE CLASSIFIED AS FOLLOWS:
   (BREAK POINTS INDICATED ON FLOW DIAGRAM)

   a. PIPING AND VALVES WITHIN PRIMARY CONTAINMENT AND UP TO THE OUTERMOST ISOLATION VALVES:

      SEISMIC CATEGORY I
      QUALITY CLASS I
      CODE GROUP B

   b. PIPING AND VALVES BEYOND THE OUTERMOST ISOLATION VALVES (INSTRUMENT LINES):

      SEISMIC CATEGORY I
      QUALITY CLASS I
      CODE GROUP C

2. CMS EPN'S FOR CALIBRATION GAS:

TANK #	(1)REGULATOR#	(2)RELIEF VALVES#	TANK VALVE
CMS-TK-1301	CMS-PRV-1301	CMS-RV-1301	CMS-V-1351
CMS-TK-1302	CMS-PRV-1302	CMS-RV-1302	CMS-V-1352
CMS-TK-1303	CMS-PRV-1303	CMS-RV-1303	CMS-V-1353
CMS-TK-1304	CMS-PRV-1304	CMS-RV-1304	CMS-V-1354
CMS-TK-1305	CMS-PRV-1305	CMS-RV-1305	CMS-V-1355
CMS-TK-1401	CMS-PRV-1401	CMS-RV-1401	CMS-V-1451
CMS-TK-1402	CMS-PRV-1402	CMS-RV-1402	CMS-V-1452
CMS-TK-1403	CMS-PRV-1403	CMS-RV-1403	CMS-V-1453
CMS-TK-1404	CMS-PRV-1404	CMS-RV-1404	CMS-V-1454
CMS-TK-1405	CMS-PRV-1405	CMS-RV-1405	CMS-V-1455

3. ◯ REPRESENTS RACK CONNECTION BULKHEAD NUMBER.

REFERENCES TO CONTRACT NUMBERS, SUCH AS 215, 206, 220, FOUND IN THE NOTES ON THIS DRAWING REFER TO ORIGINAL CONSTRUCTION DESIGN REQUIREMENTS.

CURRENT DESIGN REQUIREMENTS ARE DOCUMENTED IN THE STATION DESIGN SPECIFICATIONS AND ACTIVE CONTRACT SPECIFICATIONS WHICH STILL APPLY.

Columbia Generating Station
Final Safety Analysis Report

Flow Diagram - Reactor Building Primary Containment Cooling and Purging System

Draw. No. M543-2	Rev. 12	Figure 9.4-8.2

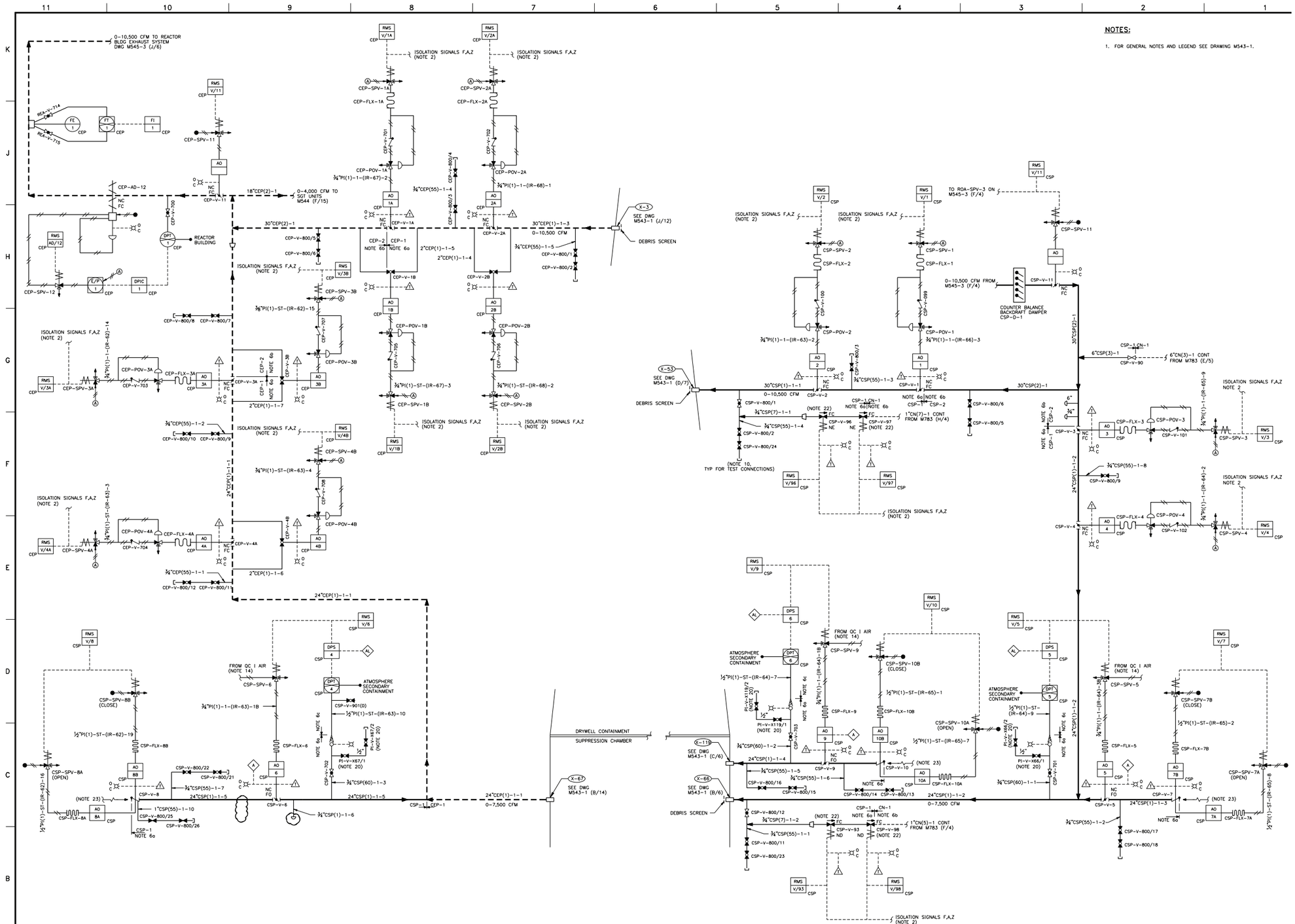

Columbia Generating Station
Final Safety Analysis Report

Flow Diagram - Reactor Building Primary Containment Cooling and Purging System

Draw. No. M543-3	Rev. 6	Figure 9.4-8.3

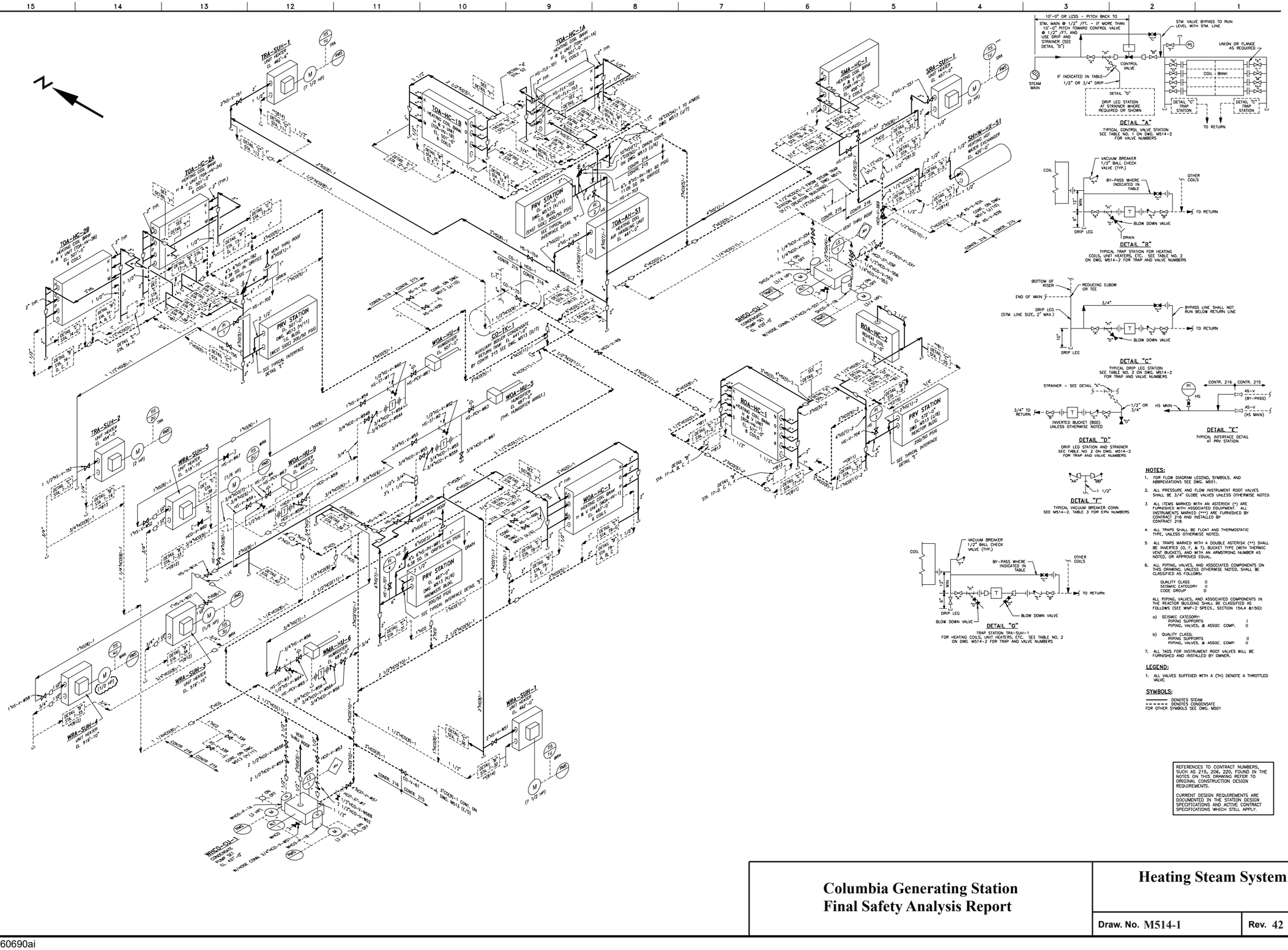

NOTES:

1. FOR FLOW DIAGRAM LEGEND, SYMBOLS, AND ABBREVIATIONS SEE DWG. M501.
2. ALL PRESSURE AND FLOW INSTRUMENT ROOT VALVES SHALL BE 3/4" GLOBE VALVES UNLESS OTHERWISE NOTED.
3. ALL ITEMS MARKED WITH AN ASTERISK (*) ARE FURNISHED WITH ASSOCIATED EQUIPMENT. ALL INSTRUMENTS MARKED (***) ARE FURNISHED BY CONTRACT 216 AND INSTALLED BY CONTRACT 218.
4. ALL TRAPS SHALL BE FLOAT AND THERMOSTATIC TYPE, UNLESS OTHERWISE NOTED.
5. ALL TRAPS MARKED WITH A DOUBLE ASTERISK (**) SHALL BE INVERTED (G, F, & T). BUCKET TYPE (WITH THERMIC VENT BUCKET), AND WITH AN ARMSTRONG NUMBER AS NOTED, OR APPROVED EQUAL.
6. ALL PIPING, VALVES, AND ASSOCIATED COMPONENTS ON THIS DRAWING, UNLESS OTHERWISE NOTED, SHALL BE CLASSIFIED AS FOLLOWS:

   QUALITY CLASS II
   SEISMIC CATEGORY II
   CODE GROUP D

   ALL PIPING, VALVES, AND ASSOCIATED COMPONENTS IN THE REACTOR BUILDING SHALL BE CLASSIFIED AS FOLLOWS (SEE WNP-2 SPECS., SECTION 15A.4 &150):

   a) SEISMIC CATEGORY:
      PIPING SUPPORTS I
      PIPING, VALVES, & ASSOC. COMP. II

   b) QUALITY CLASS:
      PIPING SUPPORTS II
      PIPING, VALVES, & ASSOC. COMP. II

7. ALL TAGS FOR INSTRUMENT ROOT VALVES WILL BE FURNISHED AND INSTALLED BY OWNER.

LEGEND:

1. ALL VALVES SUFFIXED WITH A (TH) DENOTE A THROTTLED VALVE.

SYMBOLS:

——— DENOTES STEAM
– – – – – DENOTES CONDENSATE
FOR OTHER SYMBOLS SEE DWG. M501

REFERENCES TO CONTRACT NUMBERS, SUCH AS 215, 206, 220, FOUND IN THE NOTES ON THIS DRAWING REFER TO ORIGINAL CONSTRUCTION DESIGN REQUIREMENTS.

CURRENT DESIGN REQUIREMENTS ARE DOCUMENTED IN THE STATION DESIGN SPECIFICATIONS AND ACTIVE CONTRACT SPECIFICATIONS WHICH STILL APPLY.

Columbia Generating Station
Final Safety Analysis Report

Heating Steam System – All Buildings

Draw. No. M514-1	Rev. 42	Figure 9.4-9.1

Amendment 62
December 2013

TABLE NO. 1 – VALVE NUMBERS FOR CONTROL STATIONS

HS STATION NUMBER	CONTROL VALVE	SHUT OFF VALVES "A" & "B"	SHUT OFF VALVES "F"	BY-PASS VALVE "C"	BLOW DOWN VALVE "D"	Y STRAINERS "H"	SHUT OFF VALVES "K THRU S"
S-1	3"TOA-V-31A	4"HS-V-T1A & T1B	1/2"HS-V-T1F	3"HS-V-T1C		4"HCO-ST-S1	2"HS-V-T1K THRU T1P
S-2	3"TOA-V-31B	4"HS-V-T2A & T2B	1/2"HS-V-T2F	3"HS-V-T2C		4"HCO-ST-S2	2"HS-V-T2K THRU T2P
S-3	3"TOA-V-21A	4"HS-V-T3A & T3B	1/2"HS-V-T3F	3"HS-V-T3C	1/2"HS-V-T3D	4"HCO-ST-S3	2"HS-V-T3K THRU T3P
S-4	3"TOA-V-21B	4"HS-V-T4A & T4B	1/2"HS-V-T4F	3"HS-V-T4C	1/2"HS-V-T4D	4"HCO-ST-S4	2"HS-V-T4K THRU T4P
S-5	2"HS-TCV-S5	2 1/2"HS-V-S5A & S5B		2"HS-V-S5C	3/4"HS-V-S5D	2"HCO-ST-S5	2 1/2"HS-V-S5K
S-6	3"SMA-V-21	3"HS-V-S6A & S6B	1/2"HS-V-S6F	2 1/2"HS-V-S6C		3"HCO-ST-S6	2"HS-V-S6K & S6L
S-7	3"ROA-V-21	4"HS-V-R7A & R7B	1/2"HS-V-R7F	3"HS-V-R7C	1/2"HS-V-R7D	4"HCO-ST-S7	2"HS-V-R7K THRU R7S
S-8	2"ROA-V-31	2 1/2"HS-V-R8A & R8B		2"HS-V-R8C		2 1/2"HCO-ST-S8	–
S-9	3"WOA-V-21	4"HS-V-W9A & W9B	1/2"HS-V-W9F	3"HS-V-W9C	3/4"HS-V-W9D	4"HCO-ST-S9	2"HS-V-W9K THRU W9P

TABLE NO.3–VACUUM BREAKER EPN NO'S.

HS STATION NO.	"AA"	"BB"
S-1	1" HS-V-709A	1" HS-V-709B
S-2	1" HS-V-710A	1" HS-V-710B
S-3	1" HS-V-711A	1" HS-V-711B
S-4	1" HS-V-712A	1" HS-V-712B
S-5	–	–
S-6	1" HS-V-713A	1" HS-V-713B
S-7	1" HS-V-714A	1" HS-V-714B
S-8	–	–
S-9	1" HS-V-715A	1" HS-V-715B

NOTES

1. FOR GENERAL NOTES SEE DRAWING M514–1.

TABLE NO. 2 – VALVE NUMBERS FOR TRAP STATIONS

HCO STATION NUMBER	ORIFICE SIZE	TRAP NUMBER	SHUT OFF VALVES "A" & "B"	BY PASS VALVE "C"	BLOW DOWN VALVE "D"	CHECK VALVE "E"	CHECK VALVE "F"	Y STRAINER "H"	HEATING COIL INLET VALVE OR DRIP LEG (STATION #)
T-1A	19/64"	1 1/2"HCO-T-T1A	1 1/2"HCO-V-T1AA & T1AB		1/2"HCO-V-T1AD	1 1/2"HCO-V-T1AE	HCO-V-T1AF	1 1/2"HCO-ST-T1A	HS-V-T1K EAST SIDE TOA–HC–1A (S–1)
T-1B	19/64"	1 1/2"HCO-T-T1B	1 1/2"HCO-V-T1BA & T1BB		1/2"HCO-V-T1BD	1 1/2"HCO-V-T1BE	HCO-V-T1BF	1 1/2"HCO-ST-T1B	HS-V-T1L EAST SIDE TOA–HC–1A (S–1)
T-1C	19/64"	1 1/2"HCO-T-T1C	1 1/2"HCO-V-T1CA & T1CB		1/2"HCO-V-T1CD	1 1/2"HCO-V-T1CE	HCO-V-T1CF	1 1/2"HCO-ST-T1C	HS-V-T1M EAST SIDE TOA–HC–1A (S–1)
T-1D	19/64"	1 1/2"HCO-T-T1D	1 1/2"HCO-V-T1DA & T1DB		1/2"HCO-V-T1DD	1 1/2"HCO-V-T1DE	HCO-V-T1DF	1 1/2"HCO-ST-T1D	HS-V-T1N WEST SIDE/ TOA–HC–1A (S–1)
T-1E	19/64"	1 1/2"HCO-T-T1E	1 1/2"HCO-V-T1EA & T1EB		1/2"HCO-V-T1ED	1 1/2"HCO-V-T1EE	HCO-V-T1EF	1 1/2"HCO-ST-T1E	HS-V-T1O WEST SIDE TOA–HC–1A (S–1)
T-1F	19/64"	1 1/2"HCO-T-T1F	1 1/2"HCO-V-T1FA & T1FB		1/2"HCO-V-T1FD	1 1/2"HCO-V-T1FE	HCO-V-T1FF	1 1/2"HCO-ST-T1F	HS-V-T1P WEST SIDE TOA–HC–1A (S–1)
T-1G	11/64"	1"HCO-T-T1G	1"HCO-V-T1GA & T1GB	3/4"HCO-V-T1GC	1/2"HCO-V-T1GD	1"HCO-V-T1GE		1"HCO-ST-T1G	DRIP LEG EAST SIDE TOA–HC–1A (S–1)
T-1H	11/64"	1"HCO-T-T1H	1"HCO-V-T1HA & T1HB	3/4"HCO-V-T1HC	1/2"HCO-V-T1HD	1"HCO-V-T1HE		1"HCO-ST-T1H	DRIP LEG WEST SIDE TOA–HC–1A (S–1)
T-2A	19/64"	1 1/2"HCO-T-T2A	1 1/2"HCO-V-T2AA & T2AB		1/2"HCO-V-T2AD	1 1/2"HCO-V-T2AE	HCO-V-T2AF	1 1/2"HCO-ST-T2A	HS-V-T2N SOUTH SIDE TOA–HC–1B (S–2)
T-2B	19/64"	1 1/2"HCO-T-T2B	1 1/2"HCO-V-T2BA & T2BB		1/2"HCO-V-T2BD	1 1/2"HCO-V-T2BE	HCO-V-T2BF	1 1/2"HCO-ST-T2B	HS-V-T2O SOUTH SIDE TOA–HC–1B (S–2)
T-2C	19/64"	1 1/2"HCO-T-T2C	1 1/2"HCO-V-T2CA & T2CB		1/2"HCO-V-T2CD	1 1/2"HCO-V-T2CE	HCO-V-T2CF	1 1/2"HCO-ST-T2C	HS-V-T2P SOUTH SIDE TOA–HC–1B (S–2)
T-2D	19/64"	1 1/2"HCO-T-T2D	1 1/2"HCO-V-T2DA & T2DB		1/2"HCO-V-T2DD	1 1/2"HCO-V-T2DE	HCO-V-T2DF	1 1/2"HCO-ST-T2D	HS-V-T2K NORTH SIDE TOA–HC–1B (S–2)
T-2E	19/64"	1 1/2"HCO-T-T2E	1 1/2"HCO-V-T2EA & T2EB		1/2"HCO-V-T2ED	1 1/2"HCO-V-T2EE	HCO-V-T2EF	1 1/2"HCO-ST-T2E	HS-V-T2L NORTH SIDE TOA–HC–1B (S–2)
T-2F	19/64"	1 1/2"HCO-T-T2F	1 1/2"HCO-V-T2FA & T2FB		1/2"HCO-V-T2FD	1 1/2"HCO-V-T2FE	HCO-V-T2FF	1 1/2"HCO-ST-T2F	HS-V-T2M NORTH SIDE TOA–HC–1B (S–2)
T-2G	11/64"	1"HCO-T-T2G	1"HCO-V-T2GA & T2GB	3/4"HCO-V-T2GC	1/2"HCO-V-T2GD	1"HCO-V-T2GE		1"HCO-ST-T2G	DRIP LEG NORTH SIDE TOA–HC–1B (S–2)
T-2H	11/64"	1"HCO-T-T2H	1"HCO-V-T2HA & T2HB	3/4"HCO-V-T2HC	1/2"HCO-V-T2HD	1"HCO-V-T2HE		1"HCO-ST-T2H	DRIP LEG SOUTH SIDE TOA–HC–1B (S–2)
T-3A	19/64"	1 1/2"HCO-T-T3A	1 1/2"HCO-V-T3AA & T3AB		1/2"HCO-V-T3AD	1 1/2"HCO-V-T3AE	HCO-V-T3AF	1 1/2"HCO-ST-T3A	HS-V-T3N WEST SIDE TOA–HC–2A (S–3)
T-3B	19/64"	1 1/2"HCO-T-T3B	1 1/2"HCO-V-T3BA & T3BB		1/2"HCO-V-T3BD	1 1/2"HCO-V-T3BE	HCO-V-T3BF	1 1/2"HCO-ST-T3B	HS-V-T3O WEST SIDE TOA–HC–2A (S–3)
T-3C	19/64"	1 1/2"HCO-T-T3C	1 1/2"HCO-V-T3CA & T3CB		1/2"HCO-V-T3CD	1 1/2"HCO-V-T3CE	HCO-V-T3CF	1 1/2"HCO-ST-T3C	HS-V-T3P WEST SIDE TOA–HC–2A (S–3)
T-3D	19/64"	1 1/2"HCO-T-T3D	1 1/2"HCO-V-T3DA & T3DB		1/2"HCO-V-T3DD	1 1/2"HCO-V-T3DE	HCO-V-T3DF	1 1/2"HCO-ST-T3D	HS-V-T3K EAST SIDE TOA–HC–2A (S–3)
T-3E	19/64"	1 1/2"HCO-T-T3E	1 1/2"HCO-V-T3EA & T3EB		1/2"HCO-V-T3ED	1 1/2"HCO-V-T3EE	HCO-V-T3EF	1 1/2"HCO-ST-T3E	HS-V-T3L EAST SIDE TOA–HC–2A (S–3)
T-3F	19/64"	1 1/2"HCO-T-T3F	1 1/2"HCO-V-T3FA & T3FB		1/2"HCO-V-T3FD	1 1/2"HCO-V-T3FE	HCO-V-T3FF	1 1/2"HCO-ST-T3F	HS-V-T3M EAST SIDE TOA–HC–2A (S–3)
T-3G	11/64"	1"HCO-T-T3G	1"HCO-V-T3GA & T3GB	3/4"HCO-V-T3GC	1/2"HCO-V-T3GD	1"HCO-V-T3GE		1"HCO-ST-T3G	DRIP LEG WEST SIDE TOA–HC–2A (S–3)
T-3H	11/64"	1"HCO-T-T3H	1"HCO-V-T3HA & T3HB	3/4"HCO-V-T3HC	1/2"HCO-V-T3HD	1"HCO-V-T3HE		1"HCO-ST-T3H	DRIP LEG EAST SIDE TOA–HC–2A (S–3)
T-4A	19/64"	1 1/2"HCO-T-T4A	1 1/2"HCO-V-T4AA & T4AB		1/2"HCO-V-T4AD	1 1/2"HCO-V-T4AE	HCO-V-T4AF	1 1/2"HCO-ST-T4A	HS-V-T4K EAST SIDE TOA–HC–2B (S–4)
T-4B	19/64"	1 1/2"HCO-T-T4B	1 1/2"HCO-V-T4BA & T4BB		1/2"HCO-V-T4BD	1 1/2"HCO-V-T4BE	HCO-V-T4BF	1 1/2"HCO-ST-T4B	HS-V-T4L EAST SIDE TOA–HC–2B (S–4)
T-4C	19/64"	1 1/2"HCO-T-T4C	1 1/2"HCO-V-T4CA & T4CB		1/2"HCO-V-T4CD	1 1/2"HCO-V-T4CE	HCO-V-T4CF	1 1/2"HCO-ST-T4C	HS-V-T4M EAST SIDE TOA–HC–2B (S–4)
T-4D	19/64"	1 1/2"HCO-T-T4D	1 1/2"HCO-V-T4DA & T4DB		1/2"HCO-V-T4DD	1 1/2"HCO-V-T4DE	HCO-V-T4DF	1 1/2"HCO-ST-T4D	HS-V-T4N WEST SIDE TOA–HC–2B (S–4)
T-4E	19/64"	1 1/2"HCO-T-T4E	1 1/2"HCO-V-T4EA & T4EB		1/2"HCO-V-T4ED	1 1/2"HCO-V-T4EE	HCO-V-T4EF	1 1/2"HCO-ST-T4E	HS-V-T4O WEST SIDE TOA–HC–2B (S–4)
T-4F	19/64"	1 1/2"HCO-T-T4F	1 1/2"HCO-V-T4FA & T4FB		1/2"HCO-V-T4FD	1 1/2"HCO-V-T4FE	HCO-V-T4FF	1 1/2"HCO-ST-T4F	HS-V-T4P WEST SIDE TOA–HC–2B (S–4)
T-4G	11/64"	1"HCO-T-T4G	1"HCO-V-T4GA & T4GB	3/4"HCO-V-T4GC	1/2"HCO-V-T4GD	1"HCO-V-T4GE		1"HCO-ST-T4G	DRIP LEG WEST SIDE TOA–HC–2B (S–4)
T-4H	11/64"	1"HCO-T-T4H	1"HCO-V-T4HA & T4HB	3/4"HCO-V-T4HC	1/2"HCO-V-T4HD	1"HCO-V-T4HE		1"HCO-ST-T4H	DRIP LEG EAST SIDE TOA–HC–2B (S–4)
T-5	3/8"	1"HCO-T-S5	1 1/2"HCO-V-S5A & S5B	1"HCO-V-S5C	1 1/2"HCO-V-S5D	1 1/2"HCO-V-S5E		1 1/2"HCO-ST-S5C	------
T-6A	19/64"	1 1/2"HCO-T-S6A	1 1/2"HCO-V-S6AA & S6AB	1 1/2"HCO-V-S6AC	1/2"HCO-V-S6AD	1 1/2"HCO-V-S6AE	HCO-V-S6AF	1 1/2"HCO-ST-S6A	HS-V-S6K WEST SIDE SMA–HC–1 (S–6)
T-6B	19/64"	1 1/2"HCO-T-S6B	1 1/2"HCO-V-S6BA & S6BB	1 1/2"HCO-V-S6BC	1/2"HCO-V-S6BD	1 1/2"HCO-V-S6BE	HCO-V-S6BF	1 1/2"HCO-ST-S6B	HS-V-S6L WEST SIDE SMA–HC–1 (S–6)
T-7A	5/16"	1"HCO-T-R7A	1 1/4"HCO-V-R7AA & R7AB		1/2"HCO-V-R7AD	1 1/4"HCO-V-R7AE	HCO-V-R7AF	1 1/4"HCO-ST-R7A	HS-V-R7K NORTH SIDE ROA–HC–1 (S–7)
T-7B	5/16"	1"HCO-T-R7B	1 1/4"HCO-V-R7BA & R7BB		1/2"HCO-V-R7BD	1 1/4"HCO-V-R7BE	HCO-V-R7BF	1 1/4"HCO-ST-R7B	HS-V-R7L NORTH SIDE ROA–HC–1 (S–7)
T-7C	5/16"	1"HCO-T-R7C	1 1/4"HCO-V-R7CA & R7CB		1/2"HCO-V-R7CD	1 1/4"HCO-V-R7CE	HCO-V-R7CF	1 1/4"HCO-ST-R7C	HS-V-R7M NORTH SIDE ROA–HC–1 (S–7)
T-7D	5/16"	1"HCO-T-R7D	1 1/4"HCO-V-R7DA & R7DB		1/2"HCO-V-R7DD	1 1/4"HCO-V-R7DE	HCO-V-R7DF	1 1/4"HCO-ST-R7D	HS-V-R7N SOUTH SIDE ROA–HC–1 (S–7)
T-7E	5/16"	1"HCO-T-R7E	1 1/4"HCO-V-R7EA & R7EB		1/2"HCO-V-R7ED	1 1/4"HCO-V-R7EE	HCO-V-R7EF	1 1/4"HCO-ST-R7E	HS-V-R7O SOUTH SIDE ROA–HC–1 (S–7)
T-7F	5/16"	1"HCO-T-R7F	1 1/4"HCO-V-R7FA & R7FB		1/2"HCO-V-R7FD	1 1/4"HCO-V-R7FE	HCO-V-R7FF	1 1/4"HCO-ST-R7F	HS-V-R7P SOUTH SIDE ROA–HC–1 (S–7)
T-7G	5/32"	3/4"HCO-T-R7G	1"HCO-V-R7GA & R7GB	3/4"HCO-V-R7GC	1/2"HCO-V-R7GD	1"HCO-V-R7GE		1"HCO-ST-R7G	DRIP LEG NORTH SIDE ROA–HC–1 (S–7)
T-7H	5/32"	3/4"HCO-T-R7H	1"HCO-V-R7HA & R7HB	3/4"HCO-V-R7HC	1/2"HCO-V-R7HD	1"HCO-V-R7HE		1"HCO-ST-R7H	DRIP LEG SOUTH SIDE ROA–HC–1 (S–7)
T-7J	5/16"	1"HCO-T-R7J	1 1/4"HCO-V-R7JA & R7JB		1/2"HCO-V-R7JD	1 1/4"HCO-V-R7JE	HCO-V-R7JF	1 1/4"HCO-ST-R7J	HS-V-R7S NORTH SIDE ROA–HC–1 (S–7)
T-7K	5/16"	1"HCO-T-R7K	1 1/4"HCO-V-R7KA & R7KB		1/2"HCO-V-R7KD	1 1/4"HCO-V-R7KE	HCO-V-R7KF	1 1/4"HCO-ST-R7K	HS-V-R7R SOUTH SIDE ROA–HC–1 (S–7)
T-8	7/16"	1 1/2"HCO-T-R8	2"HCO-V-R8A & R8B	1"HCO-V-R8C	1/2"HCO-V-R8D	2"HCO-V-R8E	HCO-V-R8F	2"HCO-ST-R8	------
T-9A	19/64"	1 1/2"HCO-T-W9A	1 1/2"HCO-V-W9AA & W9AB		1/2"HCO-V-W9AD	1 1/2"HCO-V-W9AE	HCO-V-W9AF	1 1/2"HCO-ST-W9A	HS-V-W9N EAST SIDE WOA–HC–1 (S–9)
T-9B	19/64"	1 1/2"HCO-T-W9B	1 1/2"HCO-V-W9BA & W9BB		1/2"HCO-V-W9BD	1 1/2"HCO-V-W9BE	HCO-V-W9BF	1 1/2"HCO-ST-W9B	HS-V-W9O EAST SIDE WOA–HC–1 (S–9)
T-9C	19/64"	1 1/2"HCO-T-W9C	1 1/2"HCO-V-W9CA & W9CB		1/2"HCO-V-W9CD	1 1/2"HCO-V-W9CE	HCO-V-W9CF	1 1/2"HCO-ST-W9C	HS-V-W9P EAST SIDE WOA–HC–1 (S–9)
T-9D	19/64"	1 1/2"HCO-T-W9D	1 1/2"HCO-V-W9DA & W9DB		1/2"HCO-V-W9DD	1 1/2"HCO-V-W9DE	HCO-V-W9DF	1 1/2"HCO-ST-W9D	HS-V-W9K WEST SIDE WOA–HC–1 (S–9)
T-9E	19/64"	1 1/2"HCO-T-W9E	1 1/2"HCO-V-W9EA & W9EB		1/2"HCO-V-W9ED	1 1/2"HCO-V-W9EE	HCO-V-W9EF	1 1/2"HCO-ST-W9E	HS-V-W9L WEST SIDE WOA–HC–1 (S–9)
T-9F	19/64"	1 1/2"HCO-T-W9F	1 1/2"HCO-V-W9FA & W9FB		1/2"HCO-V-W9FD	1 1/2"HCO-V-W9FE	HCO-V-W9FF	1 1/2"HCO-ST-W9F	HS-V-W9M WEST SIDE WOA–HC–1 (S–9)
T-9G	11/64"	1"HCO-T-W9G	1"HCO-V-W9GA & W9GB	3/4"HCO-V-W9GC	1/2"HCO-V-W9GD	1"HCO-V-W9GE		1"HCO-ST-W9G	DRIP LEG EAST SIDE WOA–HC–1 (S–9)
T-9H	11/64"	1"HCO-T-W9H	1"HCO-V-W9HA & W9HB	3/4"HCO-V-W9HC	1/2"HCO-V-W9HD	1"HCO-V-W9HE		1"HCO-ST-W9H	DRIP LEG WEST SIDE WOA–HC–1 (S–9)
T-10	1/8"	3/4"HCO-T-T10	3/4"HCO-V-T10A & T10B		3/4"HCO-V-T10D	3/4"HCO-V-T10E			------
T-11	3/8"	1"HCO-T-T11	1 1/2"HCO-V-T11A & T11B	3/4"HCO-V-T11C	1/2"HCO-V-T11D 1 1/2"HCO-V-T11H	1 1/2"HCO-V-T11E	HCO-V-T11F	1 1/2"HCO-ST-T11	DRIP LEG HCO-V-T11G SOUTH OF TRA–SUH–1
T-12	11/64"	1"HCO-T-T12	1"HCO-V-T12A & T12B	3/4"HCO-V-T12C	1/2"HCO-V-T12D	1"HCO-V-T12E		1"HCO-ST-T12	------
T-13	5/16"	1"HCO-T-T13	1 1/4"HCO-V-T13A & T13B	3/4"HCO-V-T13C	1/2"HCO-V-T13D	1 1/4"HCO-V-T13E	HCO-V-T13F	1 1/4"HCO-ST-T13	------
T-14	11/64"	1"HCO-T-T14	1"HCO-V-T14A & T14B	3/4"HCO-V-T14C	1/2"HCO-V-T14D	1"HCO-V-T14E		1"HCO-ST-T14	------
T-15	11/64"	1"HCO-T-T15	1"HCO-V-T15A & T15B	3/4"HCO-V-T15C	1/2"HCO-V-T15D	1"HCO-V-T15E		1"HCO-ST-T15	------
T-16	5/16"	1"HCO-T-T16	1 1/4"HCO-V-T16A & T16B	1"HCO-V-T16C	1/2"HCO-V-T16D	1 1/4"HCO-V-T16E	HCO-V-T16F	1 1/4"HCO-ST-T16	------
T-17	11/64"	3/4"HCO-T-T17	3/4"HCO-V-T17A & T17B	3/4"HCO-V-T17C	1/2"HCO-V-T17D	3/4"HCO-V-T17E		3/4"HCO-ST-T17	------
T-18	1/8"	3/4"HCO-T-T18	3/4"HCO-V-T18A & T18B		3/4"HCO-V-T18D	3/4"HCO-V-T18E			------
T-21	9/32"	1"HCO-T-S21	1 1/2"HCO-V-S21A & S21B	1"HCO-V-S21C	1/2"HCO-V-S21D	1 1/2"HCO-V-S21E	HCO-V-S21F	1 1/2"HCO-ST-S21	------
T-22	11/64"	1"HCO-T-S22	1"HCO-V-S22A & S22B	3/4"HCO-V-S22C	1/2"HCO-V-S22D	1"HCO-V-S22E		1"HCO-ST-S22	------
T-23	11/64"	1"HCO-T-S23	1"HCO-V-S23A & S23B	3/4"HCO-V-S23C	1/2"HCO-V-S23D	1"HCO-V-S23E		1"HCO-ST-S23	------
T-24	5/32"	3/4"HCO-T-S24	3/4"HCO-V-S24A & S24B		3/4"HCO-V-S24D	3/4"HCO-V-S24E		3/4"HCO-ST-S24	------
T-25	#38	3/4"HCO-T-R25	3/4"HCO-V-R25A & R25B	3/4"HCO-V-R25C	1/2"HCO-V-R25D	3/4"HCO-V-R25E		3/4"HCO-ST-R25	------
T-26	5/32"	3/4"HCO-T-R26	3/4"HCO-V-R26A & R26B			3/4"HCO-V-R26E			------
T-27	5/32"	3/4"HCO-T-R27	1"HCO-V-R27A & R27B	3/4"HCO-V-R27C	1/2"HCO-V-R27D	1"HCO-V-R27E		1"HCO-ST-R27	------
T-28	#38	3/4"HCO-T-R28	3/4"HCO-V-R28A & R28B	3/4"HCO-V-R28C	1/2"HCO-V-R28D	3/4"HCO-V-R28E		3/4"HCO-ST-T28	------
T-29	#38	3/4"HCO-T-R29	3/4"HCO-V-R29A & R29B	3/4"HCO-V-R29C	1/2"HCO-V-R29D	3/4"HCO-V-R29E		3/4"HCO-ST-T29	------
T-30	5/32"	3/4"HCO-T-W30	3/4"HCO-V-W30A & W30B		3/4"HCO-V-W30D	3/4"HCO-V-W30E			------
T-31	11/64"	1"HCO-T-W31	1"HCO-V-W31A & W31B	3/4"HCO-V-W31C	1/2"HCO-V-W31D	1"HCO-V-W31E		1"HCO-ST-W31	------
T-32	3/8"	1"HCO-T-W32	1 1/2"HCO-V-W32A & W32B	1"HCO-V-W32C	1/2"HCO-V-W32D	1 1/2"HCO-V-W32E	HCO-V-W32F	1 1/2"HCO-ST-W32	------
T-33	3/16"	3/4"HCO-T-W33	3/4"HCO-V-W33A & W33B	3/4"HCO-V-W33C	1/2"HCO-V-W33D	3/4"HCO-V-W33E	HCO-V-W33F	3/4"HCO-ST-W33	------
T-34	3/16"	3/4"HCO-T-W34	3/4"HCO-V-W34A & W34B	3/4"HCO-V-W34C	1/2"HCO-V-W34D	3/4"HCO-V-W34E	HCO-V-W34F	3/4"HCO-ST-W34	------
T-35	3/16"	3/4"HCO-T-W35	3/4"HCO-V-W35A & W35B	3/4"HCO-V-W35C	1/2"HCO-V-W35D	3/4"HCO-V-W35E	HCO-V-W35F	3/4"HCO-ST-W35	------
T-36	11/64"	3/4"HCO-T-W36	1"HCO-V-W36A & W36B	3/4"HCO-V-W36C	1/2"HCO-V-W36D	1"HCO-V-W36E		1"HCO-ST-W36	------
T-37									------
T-38	11/64"	3/4"HCO-T-W38	3/4"HCO-V-W38A & W38B	3/4"HCO-V-W38C	1/2"HCO-V-W38D	3/4"HCO-V-W38E		3/4"HCO-ST-W38	------
T-39	11/64"	1"HCO-T-W39	1"HCO-V-W39A & W39B	3/4"HCO-V-W39C	1/2"HCO-V-W39D	1"HCO-V-W39E		1"HCO-ST-W39	------
T-40	11/64"	1"HCO-T-W40	1"HCO-V-W40A & W40B	3/4"HCO-V-W40C	1/2"HCO-V-W40D	1"HCO-V-W40E		1"HCO-ST-W40	------

Columbia Generating Station
Final Safety Analysis Report

Heating Steam System – All Buildings

Draw. No. M514-2 | Rev. 6 | Figure 9.4-9.2

Form No. 960690ai

9.5 OTHER AUXILIARY SYSTEMS

9.5.1 FIRE PROTECTION SYSTEM

Appendix F, Fire Protection Evaluation, contains information on the plant fire protection systems.

9.5.2 COMMUNICATIONS SYSTEMS

9.5.2.1 Design Basis

Columbia Generating Station is provided with the following communication systems:

a. Public telephone access,

b. Private branch exchange (PBX),

c. Sound-powered telephone system,

d. Public address and building-wide alarm system,

e. Radio communication systems, and

f. Telephone link to Bonneville Power Administration (BPA) Dittmer Control Center.

The public telephone network provides for connection of PBX phones to outside lines.

The PBX provides intraplant communications, communication to BPA, and access to the public address and radio paging systems.

The sound-powered telephone system provides a backup to the PBX and can be used as a supplementary communications circuit to aid in the testing and maintenance of plant process systems.

The public address system provides a way of contacting personnel in the various buildings of the plant and locations of the site that might be inaccessible using other means of communication. The building-wide alarm system alerts (via the public address system speakers) operating personnel to fire hazards and other trouble conditions for which plant management finds it necessary to alert plant personnel.

The radio communications system provides a communications link for security and emergency communications to local law enforcement agencies and emergency control centers. In

addition, the radio communications system is used for communications with personnel involved in maintenance and security in and around the plant complex by means of hand-held portable radio units, mobile radio units, and paging receivers. The telephone link to BPA provides a direct communication link to the BPA Dittmer Control Center.

Post-fire safe shutdown operator actions that require emergency communication with the control room or remote shutdown room rely on the PBX phone system. The post-fire safe shutdown communication system must remain operational during a loss of offsite power. Fire brigade activities use radio communication and may communicate with the control room or remote shutdown room using a PBX phone.

All equipment, components, raceways, and support systems located in the main control room are designed and anchored such that they will not cause loss of function of nearby safety-related equipment as a result of the safe shutdown earthquake. The same criteria is followed wherever such equipment is located close to safety-related equipment.

9.5.2.2 System Description

9.5.2.2.1 Public Telephone Access

This system consists of interconnections to the public telephone network as described in the following:

a. Individual direct lines with inward and outward dialing access to several plant locations:

   1. Plant Manager's office,
   2. Main control room,
   3. Security central alarm station (CAS),
   4. Remote shutdown room, and
   5. Security secondary alarm station (SAS).

b. Provisions for extension of individual lines with direct inward and outward dialing access to other plant locations:

   1. Shift Manager's office and
   2. Radwaste control room.

c. Trunks to the PBX provide inward and outward dialing access to various plant locations.

9.5.2.2.2 Private Branch Exchange

This system consists of an all electronic, stored program, computer controlled telephone switching system with integral redundant computers. Telephones are strategically located throughout the plant complex. The system receives power from an uninterruptible power supply (UPS) system for reliable operation, consisting of a battery E-B0-PBX and battery chargers E-C0-PBX/1 and E-C0-PBX/2, located in building 25 (PAAP).

The PBX provides complete intercommunication at all times between any two telephones. Connections are established by means of a dial on each telephone. Automatic dial tone, busy tone, and ringing current are provided.

Telephone communications boxes (CBs) are provided throughout the plant. The CBs in offices have a jack for plugging in a desk-type telephone. These CBs are extensions of the PBX exchange.

Most CBs in the operating and work areas have a PBX telephone jack and a sound-powered telephone jack. Instrument and control panels in the control room have PBX and sound-powered telephone jacks installed in the panels. Operating and work areas use portable telephones plugged into the jacks. A telephone number is assigned to one CB or jack of a compatible group and the others in the group are wired in parallel to it.

Head sets may be plugged into telephones in the operating and work areas when hands-free communication is required. Approved wireless communication devices, such as cordless handsets, may be used in the plant main control room and radwaste control room. To support outage activities approved wireless communication devices can be used in the drywell and approved reactor building elevations. Administrative control of wireless devices based on the location, operating frequency, field strength, minimum distance of an exclusion zone, visual postings, and end user training are established to preclude the effects of EMI.

Dedicated communication links provide access to BPA. The PBX provides the following special features:

a. Conference - up to eight telephones can be connected into a conference network to facilitate maintenance, testing, and management activities.

b. Paging - the Public Address System can be accessed from any PBX telephone extension.

c. Ringdown - the PBX can be programmed to provide ringdown (hotline) service for selected telephones. The service provides automatic ringing without dialing.

9.5.2.2.3 Sound-Powered Telephone System

The sound-powered telephone system consists of jack access in the communications boxes and panels and connecting wiring. The system is divided into eight circuits. Each circuit serves a different area of the plant. All wiring is routed to a terminal box located in the communications equipment room. The terminal box is equipped with jumpers for interconnecting the circuits. During normal operation the jumpers are connected to form a single bus so that all sound-powered jacks are connected in parallel. Each circuit can be isolated at the terminal box if shorts or grounds occur.

Portable sound-powered telephones are plugged into the jacks to complete a communications link.

9.5.2.2.4 Public Address and Building-Wide Alarm Systems

9.5.2.2.4.1 Public Address System. The public address system is designed to provide area-wide announcements throughout the plant by means of loudspeakers located in various areas. Audio power to the speakers is provided by electronics located in equipment racks in the communications equipment room, which is located in the radwaste and control building. Power to the electronics is provided from the UPS bus.

The speakers in each of the buildings or zones are connected in two separate circuit loops. This provides an alternative path for partial communications should one loop be damaged. Paging microphones are located in various areas and are used for "all zone" pages and have priority over telephone-accessed paging.

Most telephone instruments in the PBX can access the paging system by dialing the appropriate access number. Telephone pages can be directed to a specific building/zone or to all zones. The connection between the PBX and the paging system is provided through special paging adapters which interface the two systems.

Critical electronic equipment is redundant and is automatically switched on line as required. Failure of the amplifier systems is alarmed in the control room as well as locally at the public address racks.

9.5.2.2.4.2 Building/Zone-Audio Alarm System. The audio alarm system consists of a multitone generator with redundant backup which is located within the public address (PA) system racks. The audio generators are capable of producing five distinct audio tones which are amplified by the PA system. The redundant generator is automatically switched online should the primary unit fail and an alarm is activated. The units are fed from the UPS system along with the PA system. One tone is used to alert personnel, followed by specific announcements. The audio alarm system has priority over PBX paging and "microphone actuated paging," and will override either of these functions. The main control room is

capable of activating all tones that are used. The alert tone may be activated from either the Plant Manager's office or the remote shutdown room or the TSC.

9.5.2.2.5 Radio Communications System

The radio communications system for Columbia Generating Station is integrated into the Energy Northwest radio network, which provides communications for all Energy Northwest facilities in the Hanford area.

The system is comprised of the following:

a. P25 L2 Core
b. Fiber-Optic Distributed Antenna System
c. In-Plant Repeaters
d. Area Wide Repeaters
e. Base Radio Stations
f. Radio System Desk Sets
g. Radio Dispatch Consoles
h. Portable Handheld Radios, and
i. Mobile Radios installed in vehicles.

P25 L2 Core

The P25 L2 Core zone controller system is the core of the radio communications system and is run using the ASTRO 25 "L" Core platform. The system architecture is designed with inherent fault distribution to ensure that a single point failure will not cause a complete loss of radio communications. The fault distribution includes the ability to reroute IP voice and data packets among the various redundant router configurations. Faults within the network will provide notification on the fault management terminal.

Fiber-Optic Distributed Antenna Systems (FODAS)

The FODAS consist of the ION-M master unit, ION-M4 remote unit transceivers, antennas, and rediax cables used as antennas. The master unit transmits and receives radio frequency signals to/from the base radio stations while controlling the entire ION-M system, including provisioning of the backhaul connectivity. The remote units are connected to the master unit via fiber optic cable. Up to four antennas can be connected to a transceiver using a single fiber back to the master unit.

In-Plant Repeaters

In-plant repeaters are used to provide radio communications within the plant using a fiber optic distributed antenna system. In-plant repeaters provide in-plant radio communications for

Operations, Security, Emergency Preparedness, Fire Brigade, and Maintenance. The in-plant system consists of six repeaters. One repeater is designated as a "control channel" while the other five repeaters provide the audio communications. In a trunked system the control channel notifies the zone controller when a radio user initiates or ends a call using the push-to-to-talk button on the radio, console, or desk set. The zone controller then designates an audio repeater to start or end the call. The in-plant repeaters are located in the Diesel Generator Building and are separated from other communication systems. Six traffic channels support the in-plant radio communications.

Area Wide Repeaters

Area wide repeaters provide area wide radio communications for Operations, Security, and Emergency Preparedness talkgroups. Mobile radios have been programmed to operate using area wide talkgroups. Area wide repeaters are located in the Consolidated Community Communications Facility (CCCF) on Rattlesnake Mountain.

Base Radio Stations

Base radios are programmed with talkgroups to support the in-plant and area wide radio communications. Base radios are connected to radio system desk sets and allow the desk set to talk to any talkgroup programmed within the base radio.

Radio System Desk Sets

Desk sets enable managers, supervisors, and team leaders the ability to communicate with plant and field teams through the in-plant and area wide radio communication systems to provide directional instructions.

Radio Dispatch Consoles

Dispatch consoles have access to all RF resources available to the L2 Core Trunked Digital Radio System. Offsite agencies using conventional radio channels will only be available to the dispatch consoles. Dispatch consoles serve as the mutual aid for interoperability and have the ability to patch offsite agencies into talkgroups for communications with radio users.

All equipment other than mobile radios or handheld portable radios are powered by a UPS bus for reliable operation.

9.5.2.2.6 Telephone Link for Connection to the BPA Dittmer Control Center

This circuit consists of telephones located in the main control and remote shutdown rooms of the radwaste and control building, which are directly connected to the Columbia Generating Station/BPA communications equipment. These phones automatically ring to the Dittmer Control Center of BPA when they are used.

9.5.2.3 Inspection and Testing Requirements

All communication cable conductors are tested for continuity and insulation resistance before connection to the various communication apparatus. Fiber optic cables are tested using an Optical Time Domain Reflector (OTDR) to measure continuity. A functional test on all communications systems is made after installation.

The functional test on the total installed radio communications system included a complete test of all system functions such as operation from dispatch consoles, base radios, desk sets, and two-way communication between offsite and onsite stations. Tests were made using both the maintenance and security system frequencies. Tests were performed to ensure that no harmful interference results between this equipment, the repeater station on Rattlesnake Mountain, and control room equipment. During preoperational and postoperational surveillance testing, solid state electronics in some areas exhibited spurious response to radio transmission. These areas have been flagged by signs showing "Prohibited Area For Use of Radios" and are put under administrative control.

9.5.2.4 Capability During Postulated Accident and Anticipated Transients

Table 9.5-1 shows the strategic work areas and the type of communications available between these locations and the control room, remote shutdown room, and outside Columbia Generating Station.

9.5.2.4.1 Protective Measures

The plant communications system provides assurance that a reliable communications link is available from the strategic plant work stations to the control room. The following design factors contribute toward this goal:

a. The PBX is built with plug-in modular circuit boards so that defective boards can be quickly replaced,

b. The PBX has redundant processing units with automatic switching from a failed computer to the redundant computer,

c. The sound-powered telephone system backs up the PBX system in case of a major failure of the PBX,

d. Several telephones are connected directly to the public telephone network to operate independently of the PBX. These include telephones in the main control room, remote shutdown room, building 62, and the Plant General Manager's office, and

e. During a loss of offsite power, the PEC/PAAP diesel generator ensures the PBX system operation beyond the 8-hr capacity of the PBX communication system battery, E-B0-PBX.

9.5.2.4.2 Severing of Lines or Trunks

The failure of a single line or trunk cannot prevent communications from critical plant locations. Alternate facilities are available as follows:

a. Radios do not require offsite lines and can be used in lieu of telephones if telephone lines are not available,

b. Portable radios can be used if the antenna leads to fixed stations are inoperable, and

c. Tie lines connect the PBX to the BPA communications system. The lines provides telephone communications from Columbia Generating Station to telephones in BPA facilities. These communications are independent of the public telephone network.

9.5.2.4.3 High Noise

The communication system design addresses high noise area problems as follows:

a. Telephones may be installed in sound dampening booths with either or both noise-canceling handsets and amplified receivers, and

b. Public address system speakers have volume controls which are adjusted according to the ambient noise level.

9.5.2.4.4 Post-Fire Safe Shutdown

Fire induced failures of the PBX communication system are evaluated for the various fire areas as part of the post-fire safe shutdown analysis. See F.2.6.2 for more detail.

9.5.3 PLANT LIGHTING SYSTEM

9.5.3.1 Design Bases

a. Lighting intensities are designed to provide indoor and outdoor illumination consistent with the Illumination Engineering Society recommendations (July 1974), and to meet or exceed OSHA requirements,

b. Light sources are selected with consideration for environmental conditions and ease of maintenance,

c. Fluorescent or high-intensity discharge (HID) sources are not used inside primary containment. These contain mercury, a known contaminant in reactor coolant system,

d. The normal lighting supplied from either the main generator or offsite power is designed to provide adequate lighting for normal plant operation and associated plant access routes, and for control and maintenance of equipment, and

e. The emergency lighting supplied from onsite power is designed to provide adequate lighting for safe shutdown of the plant and for associated plant access routes during the full spectrum of accidents, transients and special events.

9.5.3.2 System Description

The plant lighting system consists of four systems: normal ac lighting, normal-emergency ac lighting, emergency dc lighting, and battery-pack emergency lighting. For the location of various fixed emergency lighting systems that support safe shutdown of the plant, see Table 9.5-2. See Figures F.6-18, F.6-19 and F.6-20 for locations of portable lantern use.

9.5.3.2.1 Normal Alternating Current (ac) Lighting Systems

This system consists of two systems (A and B) which are energized from the plant non-safety-related 480-V ac auxiliary system motor control centers directly from three-phase 480-V ac, or through 208/120-V ac dry type lighting transformers and local area lighting panels.

9.5.3.2.2 Normal-Emergency ac Lighting Systems

Normal-emergency ac lighting is provided for safe and orderly shutdown during the loss of normal ac power. This system is energized from the safety-related 480-V ac motor-control centers through isolation devices to non-Class 1E three-phase, four-wire 208/120-V ac dry type lighting transformers that feed lighting panels.

This lighting system consists of two systems (Divisions 1 and 2). Each system has ac lighting energized from critical buses that are connected both to and backed by their associated diesel generators (DG1 & 2).

This ac lighting comprises approximately 15% of the normal plant lighting load. The ac lighting fixtures in the main control room are designed and supported as Seismic Category I.

Some of the ac lighting system within the main control room can be manually transferred from its critical bus to an inverter supplied source if the associated battery charger is in service.

9.5.3.2.3 Emergency Direct Current (dc) Lighting Systems

Emergency dc lighting is provided in the main control room, the access route to the remote shutdown room, and in the remote shutdown room. The emergency dc lighting system is necessary for conducting shutdown operations during the coping period of a Station Blackout event.

This lighting consists of two systems (Divisions 1 and 2). Each system is energized from a 125-V dc plant emergency battery system. The remote shutdown room and access route lighting is continuously lit, and the control room dc lighting is energized on a loss of power to the normal-emergency lighting in the main control room. This dc lighting load consists of incandescent light sources.

9.5.3.2.4 Battery-Pack Emergency Lighting Systems

Battery-pack emergency lighting consists of 1.5-hr and Appendix R lighting units. The lamps automatically energize on loss of the respective normal and/or normal-emergency ac lighting. Emergency battery units in Seismic Category I areas of the radwaste building are Seismic Category I mounted and supported.

The 1.5-hr lighting consists of Emergency Battery Units (EBUs) and Emergency Reserve Ballast (ERB) units in areas without EBUs, installed for the safety of operating personnel to provide lighting for egress routes.

Appendix R 8-hr emergency battery packs and portable 8-hr lanterns are available for use to ensure operators can perform post-fire safe shutdown manual actions outside the control room, for a fire in specific plant areas, concurrent with a LOOP. At a minimum, 8-hr emergency battery pack lighting is installed at locations where operators perform long-term plant control and shutdown actions. The portable 8-hr lanterns are used for short-duration operator actions. There are four stations provided in various plant locations with five portable lanterns available at each location.

9.5.3.3 Safety Evaluation

Normal and normal-emergency lighting is located throughout the plant to provide necessary lighting during normal plant operation and during a power system failure. In the Reactor Building, during accident conditions, the normal lighting is tripped by an accident signal (FAZ) to reduce building heat load.

In areas that are serviced by HID lighting sources, 10% of the fixtures are provided with tungsten halogen standby lamps. These standby lamps will be immediately energized after an interruption of the power source and will provide partial illumination until the HID lamps restrike.

The normal and normal-emergency lighting provide no safety-related function and thus are non-safety related.

9.5.4 DIESEL GENERATOR FUEL OIL STORAGE AND TRANSFER SYSTEM

9.5.4.1 Design Bases

a. The onsite storage capacity of each subsystem provides for continuous operation of each diesel generator for at least 7 days while satisfying post-LOCA maximum load demands;

b. The design of the system conforms to Regulatory Guide 1.137. The equipment within the system conforms to the applicable codes and standards of ASME, ASTM, ANSI, DEMA, IEEE, API, and NFPA;

c. The system piping off of the engine skid is constructed to ASME Section III, Class 3 and Seismic Category I requirements except for the portions of the piping associated with the filter/polisher system. Except for the diesel oil storage tanks and portions of the filter/polisher system, all portions of the system, including the fuel oil day tanks, are protected from tornado missiles by enclosure in tornado-hardened, Seismic Category I structures. The diesel oil storage tanks and associated piping (except for exposed fill, vent, and filter/polisher piping as described in Section 3.5) are buried for tornado protection and to maximize containment of postulated oil spills. The system is not subject to flooding since the site is not subject to flooding. The piping on the engine is constructed using ANSI B31.1 as a guide and is Seismic Category I;

d. The diesel fuel storage system is augmented by the installation of a filter/polisher unit located in a separate filter/polisher building east of the storage tanks. This unit is non-safety-related. It is used to clean bulk fuel of contaminants and fuel degradation products formed due to long storage. It is also used to polish fuel oil delivered by fuel supply tankers, if necessary, prior to delivery to the storage tanks. The filter vessels are constructed to ASME Section VIII, Division I, and the piping components to ANSI B31.1 Power Piping Code.

e. The Quality Class II Auxiliary boiler storage tank is used as an additional storage tank for the emergency diesel generator fuel oil. This tank was cleaned before putting it into diesel fuel storage service and is maintained to the same cleanliness requirements as the other Class I fuel oil tanks. The diesel fuel oil stored in this tank is surveyed to the same requirements as the other diesel storage tank's fuel oil. This storage tank and its connective piping are not required to be Seismic Category I, since this additional qualified fuel oil is non-safety-related.

9.5.4.2 System Description

The fuel oil storage and transfer system consists of separate, independent diesel oil supply systems serving each of the two tandem diesel generators (DG 1 and DG 2) and the high-pressure core spray (HPCS) diesel engine generator (DG 3). Each of these systems consists of a fuel oil storage tank, a transfer pump, a day tank, interconnecting piping and valves, and associated instruments and controls. The system diagram is shown in Figure 9.5-1.

In each supply system, a transfer pump powered from a safety-related motor control center (MCC) takes suction from the diesel oil storage tank and discharges to an associated diesel generator fuel oil day tank to maintain the fuel oil level within the day tank. The transfer pump is sized to provide a flow several times the maximum engine consumption rate (of 110% load) and is automatically controlled by level switches activated by day tank fuel level. The fuel stored in each diesel generator 60,000-gal storage tank (50,000 gal for the HPCS diesel generator) plus the fuel maintained in each 3000-gal day tank is adequate for 7 days of operation.

Each transfer pump supplies a separate day tank for each diesel generator. There is a pipe interconnecting the diesel generator 1 and 2 transfer lines with normally locked closed valves. If a rupture occurs in the interconnecting cross line when in use, this line will be manually isolated and thereby the fuel oil supply will not be interrupted between any storage tank and its associated day tank.

The volume of the day tanks permits 8.5 hr of engine operation of the associated diesel generator without resupply to the day tank. This arrangement allows the transfer pump start signal to occur prior to the day tank low level alarm. In the event the transfer pump does not start, there remains at least 3.5 more hours of operation after low level alarms are actuated to take required corrective action. These operating times are for Division 1 and Division 2 with the diesel generators operating at 100% of the continuous rated load of 4400 kW. The maximum operating time for Division 3 (HPCS) will be substantially longer since the day tanks are the same size. The single HPCS engine carrying 2600 kW will use substantially less fuel than two engines carrying a load of 4400 kW.

At normal high oil level a switch will shut off the pump. If the fuel oil level goes above the normal high level, a high level switch is activated and sends an alarm signal. If the pump does not shut off, the day tank overflow line will return all pump flow to the storage tank of the same diesel generator.

The fuel oil storage system has provisions to fill the storage tanks, transfer fuel from one tank to another, and filter/polish the fuel in the tanks or fuel being delivered to the tanks. The fill header is designed to allow delivery of fuel directly to a storage tank or run through the filter/polisher unit prior to delivering it to the tank from the fuel tanker. The piping boundary between the ASME III fill lines and header and the Quality Class II filter/polisher are at ASME III, 3 normally closed butterfly valves.

The filter/polisher, when used to polish the fuel stored in the tanks, removes oil from the bottom of the tank through a suction sparger that extends along the length of the tank. This oil is filtered and polished removing water and particulates. Then the filter/polisher returns the oil to the tank through the fill line.

The filter/polisher can be used to transfer fuel from one tank to another with or without filtering and polishing. The filter/polisher is equipped with a recording flow meter so the operator knows the quantity of fuel that has passed through the filter/polisher.

The filter/polisher suction line from the storage tank flanged nozzle to the filter/polisher suction header isolation valves is ANSI B31.1 Quality Class 2, Seismic Category I. The sparger in the tank is ANSI B31.1, Quality Class 2, Seismic Category I, and the fill line returning oil to the tank is ANSI B31.1, Quality Class 2, Seismic Category II. The suction and fill line for the auxiliary boiler storage tank is ANSI B31.1, Quality Class 2, Seismic Category II.

Operation of the fuel storage tank transfer pump is controlled manually when fuel is being transferred through the interconnecting line from storage tank A to day tank B or from storage tank B to day tank A. High level annunciation of the day tank fuel level will provide a warning of overfilling the day tank.

The fuel oil supply from the day tanks to each diesel engine consists of two systems. Either system is capable of supplying fuel oil to the engine. For diesel generator 1 and 2 each system contains a fuel supply line strainer, fuel oil pump, duplex filter, pressure gauge, relief and check valves, and separate fuel return lines to the day tanks. The HPCS diesel generator fuel oil system is slightly different, see Section 8.3.1.1.7.2.6 for a description of the HPCS diesel generator fuel oil system.

One of the fuel supply pumps is mechanically driven by the engine and is normally used during engine operation. The other supply pump is driven by a 120-V dc motor and is used to fill the fuel oil system and fuel header prior to initial operation and after maintenance has been performed on system piping and components. The dc-motor-driven pump is running during engine operation in the event fuel supply through the engine-driven pump system fails.

The fuel pumps are located 2.3 ft higher than the suction pipes inside the day tank. The fuel pumps are designed to operate at this negative suction pressure. The fuel oil supply and return piping is not exposed to ignition sources such as open flames or hot surfaces. The transfer lines between the storage and day tanks are buried.

The fuel oil day tank is located in a separate ventilated room which is sized to contain the full contents of the tank should a leak develop. For discussion of fire protection see Section 9.5.1.

The tanks are filled through individual lines from a common fill header that has a strainer and locked fill connection. Each tank also has an individual vent with a flame arrestor.

The fill and vent lines terminate at 2.33 ft and 8.0 ft, respectively, above plant grade, which prevents direct seepage of any ground water into the storage tanks.

In the event of fill line damage due to a missile, the pump-out connection which is protected by a metal enclosure, located at ground level, may be used for the fuel oil filling operation.

Prior to filling the storage tanks, the day tank will be confirmed to be full. This will allow sufficient time for sediment to settle before oil from the storage tanks is transferred to the day tank.

Diesel fuel oil conforming with the requirements of the Technical Specifications is provided for operation of the diesel generators. This grade of diesel fuel complies with the engine manufacturer's requirements and is available from local distribution sources as discussed in Section 9.5.4.3.

Equipment design characteristics for the fuel oil supply system are shown in Table 9.5-3.

9.5.4.3 Safety Evaluation

The entire diesel oil supply system is located within the confines of a Seismic Category I building except for the buried storage tank and the fill, vent, and filter/polisher piping. Each system oil storage tank transfer pump, day tank, and diesel generator set is physically separated within separate concrete enclosures designed to protect against missiles, in compliance with Section 3.5, and to provide fire protection. No high- or moderate-energy piping is present in the diesel generator building which could present a potential hazard to the operational function of these systems. The oil storage tanks are buried for protection so that storage tank failure is completely contained within the soil at a level below any building penetration or access opening. Each storage and day tank is provided with a vent directly to the outside atmosphere. In addition, the enclosures are provided with exhaust ventilation to the outside atmosphere to ensure that diesel fuel vapors are maintained well below the combustible limit. The enclosures are automatically monitored by temperature detectors which initiate the preaction sprinkler system in the event of fire (Appendix F). All storage and day tank vents are equipped with flame arrestor devices.

Although a single failure may result in loss of fuel to one diesel generator, the other diesel generator can provide sufficient capacity for emergency conditions, including safe shutdown of the reactor (see Section 8.3) coincident with loss of offsite power.

The fuel level in each storage tank is maintained above the level at which the fuel in the storage tank plus the fuel in the corresponding day tank is adequate for 7 days of continuous operation at 4400 kW for diesel generators 1 and 2, and 2630 kW for diesel generator 3 (HPCS).

The minimum site storage of 7 days is considered adequate time for obtaining additional fuel oil, if required. The auxiliary boiler storage tank is available as an additional source for qualified diesel fuel oil. On an expedited basis fuel can also be available at the site from a remote source within 12 to 24 hr.

Materials for the fuel oil supply system are provided in Table 9.5-3.

For corrosion protection, the exterior surfaces of the buried piping and components are coated with coal tar enamel. Application of coatings are in strict accordance with AWWA Standard C203.

The buried components of the fuel oil system are all at a relatively uniform temperature and not subject to condensation phenomena. The periodic sampling of the diesel fuel storage tank bottom below the transfer pump will be performed to determine if any water has accumulated and if so corrective action will be taken.

A fuel oil filter and strainer is provided on each fuel line to each engine to eliminate passage of particles, 12 μ or larger in size to the engine injectors.

The overflow lines from the day tank to the storage tank run underground south of the diesel generator building. Diesel oil pipe lines extending under the diesel generator building do not receive full protection from the exterior rectifier-anode system because of the electrical shielding effect of the ground grid and foundation reinforcing and structural steel. Since the earth area under the diesel generator building is sheltered and hence relatively much drier than the earth exterior to this building, no additional cathodic protection system is provided or required.

9.5.4.4 Testing and Inspection Requirements

System components are inspected and cleaned prior to installation. Instruments are calibrated during testing and automatic controls are tested for actuation at the proper setpoints. Alarm functions are checked for operability and limits during plant preoperational testing. Automatic actuation of system components is tested periodically in accordance with the Technical Specifications and plant procedures. The system is operated and tested initially with regard to flow paths, flow capacity, and mechanical operability (see Chapter 14).

Operability of the diesel fuel oil system is ensured by

a. At least once per 10 years: Draining each fuel oil storage tank, removing the accumulated sediment, and cleaning the tank using a sodium hypochlorite or equivalent solution, and

b. At least once per 10 years: Performing a pressure test of those portions of the diesel fuel oil system designed to Section III, Subsection ND of the ASME Code in accordance with ASME Code Section XI, Article IWD-5000.

New and stored fuel oil is sampled and tested in accordance with the Technical Specifications.

9.5.4.5 Instrumentation Requirements

Each diesel oil storage tank is provided with local level indicators and high and low level switches which actuate alarm annunciators in the main control room. In addition, there are system fault annunciators in the main control room for each diesel oil storage tank that will alert the operator of a malfunction of the level instrumentation for a given storage tank. Each day tank is provided with two level switches and a float switch which perform the following functions:

a. Start and stop the transfer pump to maintain level in the day tank,
b. Actuate an alarm in the main control room on low level, and

c. Actuate an alarm in the main control room on high level.

The fuel oil filter/polisher is equipped with a flow totalizer to aid in maintaining minimum fuel quantity in each storage tank when transferring from tank to tank. The filter/polisher is equipped with instrumentation and a level switch in a sump to alarm in the main control room if a malfunction occurs or fuel oil leakage occurs in the filter/polisher building. The filter/polisher control panel contains a bargraph/digital level indicator for each diesel oil storage tank. Each bargraph drives a visual and audible annunciator that alerts the operator of a high level condition in that tank. An outside alarm is provided at the filter/polisher facility to alert the operator if any storage tank has a high level condition. A remote shutdown switch is provided in the control room for the operator to shut down the filter/polisher. An emergency shutdown switch is also located just outside of the door of the filter/polisher building.

Each transfer pump discharge line is provided with local pressure indicators. The system maintains the proper supply of diesel oil in each day tank by means of the level switches in the day tanks which signal the corresponding pump motor starters to automatically start and stop the transfer pumps.

Each diesel generator local control panel is provided with a control switch for control of its respective transfer pump.

Local indication of differential pressure is provided across the duplex filters of the fuel oil supply lines to the diesel engines of diesel generators 1 and 2.

9.5.5 DIESEL GENERATOR COOLING WATER SYSTEM

9.5.5.1 Design Bases

a. The diesel generator cooling water system is designed to provide full load cooling for the diesel generator engines while they are operating and to maintain each engine at an acceptable starting temperature under standby conditions;

b. The piping system associated with the diesel cooling water system was constructed to the guidelines of ANSI B31.1. Seismic classification of the system is Seismic Category I as discussed in Section 3.2.4. The diesel cooling water heat exchangers for diesel generators 1A and 1B are designed and built in accordance with ASME Section III, Class 3 and TEMA Standards, Class C; diesel generator 1C (HPCS) cooling water heat exchanger is designed and built in accordance with ASME Section VIII, TEMA Standards, Class C; and

c. The reliability of the diesel cooling water system is achieved by providing separate cooling water systems for each diesel generator. Thus, failure of a single component in one cooling water system would not effect the operation of

the other diesel generator. In addition the systems are housed separately in a Seismic Category I structure containing no high- or moderate-energy piping which could present a potential hazard to the operational function of these systems.

9.5.5.2 System Description

Each diesel generator is serviced by an independent cooling system. These systems are located in separate rooms associated with their respective diesel generator. Each engine cooling water system is a closed water circuit which recirculates treated water (see Section 9.2.3) for engine cooling (see Figures 9.5-1 and 9.5-3). The treated water is circulated through the water-jacketed components of the engine to remove heat from the engine parts. This jacket water heat is rejected through a shell and tube heat exchanger to the standby service water (SW) system (see Section 9.2.7). Location of the system is shown in Figure 9.5-2.

The forced circulation of cooling water through the engine, lube oil cooler, heat exchanger, and heat exchanger bypass circuit is maintained by two engine-driven pumps. The separate bypass piping flow paths are provided to bypass the heat exchanger at low engine outlet temperatures and to heat the jacket water system during standby. The heat exchanger bypass flow and temperature is automatically regulated by a three-way self-contained thermostatic valve. This valve is set to maintain the engine outlet water temperature at about 180°F. This thermostatic valve outlet opens to the heat exchanger when the engine jacket water temperature reaches 165°F and is full open to the heat exchanger at 180°F. A high temperature alarm annunciates at 200°F (195°F for HPCS diesel engine). A high temperature shutdown switch is provided to shut down the engine when coolant temperature reaches 208°F (205°F for HPCS diesel engine) during test conditions.

The heat exchangers are designed for 110% continuous rating of each diesel generator using 95°F service water to the heat exchanger. The maximum service water temperature is always well below 95°F. This provides a 10% margin in the size of the heat exchangers.

The only time the diesel generators are run at 110% of their continuous rating is during required surveillance testing. This is usually for 2 hr once a year, and always less than 10 hr/year, compared to the 2 hr/day as allowed by the engine manufacturer's rating.

The diesel generator heat exchangers are designed to perform as given in Table 9.5-4.

An expansion tank is mounted on the diesel engine skid, located above the cooling water circulating pump suction. The expansion tank is provided with a pressure cap that maintains pressure on the cooling water system (7 psi) and prevents loss of water due to evaporation.

The expansion tank is provided with a level sight glass which is mounted on the front with instructions that indicate minimum water level. An alarm is provided in the control room to

annunciate in case of low water level. Makeup water is normally supplied by the demineralized water system, but a Seismic Category I, Safety Class 3, makeup water line from the SW system is provided as an alternate supply to the expansion tank.

Diesel generator unit reliability, including the functions required of the circulating water pump and expansion tank were demonstrated prior to installation (qualification and shop performance tests). Periodic testing and maintenance ensure continued reliability.

During shutdown periods, an electric immersion heater is provided for standby heating. The engine can thus be kept in constant readiness for an immediate start. The heating unit is mounted at the bottom of the accessory rack to heat the engine cooling water which circulates by thermosyphon action to the lube oil cooler, engine, and turbocharger after coolers. A thermostat sensing water temperature controls the heating elements. The water temperature is controlled to maintain a lube oil temperature of approximately 120°F as described in Section 9.5.7. The auxiliary motor-driven oil pump circulates lube oil through the lube oil cooler to pick up heat during standby conditions and then returns the warmed oil to the engine sump (see Section 9.5.7). Low oil temperature alarm is provided to ensure that the immersion heater is operating properly (see Sections 9.5.7.2 and 8.3.1.1.7.2.3).

To ensure that all components and piping are initially filled with water, a demineralized water supply is temporarily connected to the 1.25-in. fill-drain connection located on the engine base at the cooling water pump end. Filling the cooling water system from the bottom up allows entrapped air to be vented to the expansion tank. (The HPCS engine has a permanent connection.)

The engine cooling water return pipe (between engine block and temperature regulating valve) is slightly higher than the top of the expansion tank. However, as may be seen from Figures 9.5-1 and 9.5-3, during system operation any entrapped air will be properly relieved to the expansion tank through the provided vent lines due to the differential pressures involved.

A 500-gal reservoir tank is provided in the cooling water system of each diesel engine associated with diesel generators 1 and 2 to permit operation of the engine for the time required to receive SW cooling. The HPCS diesel engine is designed to permit operation without cooling for a time equivalent to that required to bring the cooling equipment into service with energy from the HPCS diesel generator.

In accordance with the manufacturer's maintenance instructions, a corrosion inhibitor is added to the demineralized fill water to preclude corrosion and organic fouling in the diesel engine cooling water system. Since the entire system is enclosed in the diesel generator building and maintained in a warm condition with immersion heaters, antifreeze compounds are not needed.

Cooling system materials of construction include cast irons, carbon steel, rubber, and bronze. Corrosion inhibitors can be used effectively with these materials.

Demineralized water and a corrosion inhibitor are in conformance with the engine manufacturer's recommendations.

9.5.5.3 Safety Evaluation

The diesel generator cooling water system meets the single failure criterion in that if a failure in the system prevents the operation of its associated diesel generator, the remaining diesel generators will not be affected.

This redundancy is accomplished by segregating the power supplies to engineered safety features into three mutually exclusive divisions, each provided with a diesel generator and associated cooling water system. The cooling water systems associated with a particular diesel generator are cooled from an independent SW system.

In the event of the loss of offsite power, the SW pumps which supply cooling water to the heat exchangers begin operation within a safe margin of the point at which the diesel generators 1 or 2 would require the cooling capability of the heat exchangers. See Section 9.2.7 for evaluation of this system.

The high temperature shutdown switches are locked out of the safety circuit during the automatic (emergency) operational mode of the diesel generators to ensure the availability of the emergency power from each generator.

Evaluation of the diesel generator operation under light load conditions is presented in Sections 8.3.1.1.7.1.11 and 8.3.1.1.7.2.11.

9.5.5.4 Testing and Inspection Requirements

The system is operated and tested initially with regard to flow path, flow capacity, and mechanical operability (see Section 14.2).

To ensure continued integrity of the diesel generator cooling water system, scheduled testing of equipment is performed as part of the overall engine performance checks at regular intervals in accordance with the Technical Specifications. Periodic inspections are conducted in accordance with plant procedures prepared in conjunction with the manufacturer's recommendations.

Instrumentation is provided to monitor cooling water temperature and pressure, expansion tank level, and to alarm high water jacket temperature. These instruments receive periodic calibration and inspection to verify their accuracy.

The water in the cooling water system is periodically analyzed and treated, as necessary, to maintain the desired quality.

9.5.6 STARTING AIR SYSTEM

9.5.6.1 Design Bases

a. Each emergency diesel generator, including the HPCS diesel generator, is provided with separate, independent starting air systems;

b. Each starting air system on diesel generator 1 or 2 has sufficient air receivers to provide for five diesel generator starts. The starting air system on each diesel generator consists of two completely redundant systems including two banks of air receivers, separate piping and valves, and one pair of air motors per engine which are both actuated on a start signal. The starting system on HPCS diesel generator 3 consists of two separate systems from separate air receivers through separate piping and control valves to a pair of air motors on each side of the engine. The air receivers have sufficient air capacity for three starts; and

c. The starting air piping off the engine skid is designed, fabricated, inspected, and erected in accordance with ANSI B31.1. The piping on the engine skid is constructed using ANSI B31.1 as a guide. The system is designed to Seismic Category I requirements. The air receivers associated with diesel generators 1 or 2 are designed and constructed in accordance with the requirements of ASME Section VIII (1973 Edition). The HPCS diesel generator air receivers were designed and constructed in accordance with the 1971 Edition of the same code.

9.5.6.2 System Description

The starting air system is shown schematically in Figure 9.5-1. The starting air systems for diesel generators 1 and 2 consist of two electric-motor-driven air compressors, eight air receivers, and associated piping and controls.

Control switches for the electric-motor-driven operation of the air compressors on diesel generators 1 and 2 are on the local diesel engine control board. These control switches permit on-auto-off operation. A selector switch permits selection of either compressor function as the primary pressurization compressor.

Pressure switches in either air receiver bank automatically start the selected compressor when the receiver pressure decays to 241 psig. If the selected compressor fails to operate or cannot hold system pressure, a separate low pressure alarm switch is provided for each bank of air receivers and is set to alarm at 238 psig on a local panel and in the main control room. When the receiver pressure decays to a lower pressure, the back-up air compressor starts.

The HPCS starting air system has two separate air supply trains: one supplied by a diesel-driven compressor and the other by an electric-motor-driven compressor.

The compressor discharge piping is cross connected. Both air receivers charge if either compressor operates. A check valve on each receiver inlet isolates one train from the other.

The compressors are controlled automatically by pressure switches on their associated air receiver. The compressor's low pressure setpoint ensures that the compressor starts to maintain the air receiver pressure at a sufficient amount to start the engine the required number of times.

The HPCS diesel-driven compressor may shut down prior to clearing the low pressure alarm on the receiver in the electric-motor-driven compressor train.

The air receivers are equipped with safety/relief valves set at the receiver design pressure.

The major system components are located adjacent to the diesel generator skid.

For each diesel generator (1 and 2), two separate air-cooled compressors discharge through common piping to two banks of four 32 ft^3 air receivers which are connected in parallel. Each bank of air receivers has the capability of a minimum of five engine starts. Each bank is connected through separate piping to a pair of air start motors on each engine.

The flow path is from the air receiver manifold, through an isolation valve, a pressure reducing valve, through piping to the engine, then a strainer, an air relay valve, and a lubricator to each pair of air starter motors. The starting air system on each engine consists of four air start motors. These air start motors drive a flywheel ring gear which turns the engine. When a start signal is given, an air start solenoid valve in each redundant system admits air to engage a pair of the air start motor pinions on each engine to the flywheel ring gear. When the pinions are engaged, air is admitted through an air control valve to a pair of air start motors. The other pair of start motors on the engine are simultaneously engaged by the redundant start solenoid valves. Engine cranking time is approximately 2 sec.

The starting air system is designed to provide a reliable method for automatically starting each diesel generator unit. The system design is such as to preclude fouling of its components. Downstream of the air compressors, dryers are installed to ensure the dewpoint of the air will be below the minimum room temperature if the system is filled during the worst ambient air conditions. The air dryers are drained periodically to remove oil and moisture. A filter is provided downstream of the dryer to ensure no desiccant or debris can enter the system. In addition, "Y" type strainers are provided upstream of the starting air valves and motors. These strainers are cleaned periodically to ensure that they are kept free from contaminants.

The air starting system of the HPCS diesel generator is similar to that of diesel generators 1 and 2 described above except (a) the number of air receivers: two, of approximately 36 ft^3 each, (b) the number of engine starts: three from the air receivers with the compressors locked out, (c) the redundant starting air compressor is diesel driven and automatically operates without manual actions, and (d) there are two parallel systems that each simultaneously operate a pair of air motors on the diesel generator for a start. The parallel systems provide the ability to produce a start even if one system sustains a pressure boundary failure or a failure of one starting air solenoid valve to open.

See Section 8.3.1.1.7.2.5 for additional discussion of the HPCS diesel engine starting air system.

9.5.6.3 Safety Evaluation

Each diesel generator starting air system is capable of supplying a sufficient quantity of air from its associated air receivers to ensure a successful starting operation of the diesel generator independent of normal plant power sources.

The starting air systems for each diesel generator unit are physically and electrically separated to ensure that no single failure can cause malfunction of both divisions of standby ac power. The single failure criterion is satisfied and significantly enhanced by having redundant piping systems and mechanical equipment for diesel generators 1A and 1B and duplicate (but not functionally redundant) piping systems and mechanical components for the HPCS diesel generator. All three diesel generators also have redundant starting solenoid valves.

9.5.6.4 Testing and Inspection Requirements

Preoperational testing was performed as described in Section 14.2. To ensure continued integrity of the diesel generator starting air system, scheduled testing of equipment is performed as part of the overall engine performance checks at regular intervals in accordance with the Technical Specifications. Periodic inspections are conducted in accordance with plant procedures prepared in conjunction with the manufacturer's recommendations.

9.5.7 DIESEL GENERATOR LUBRICATION SYSTEM

9.5.7.1 Design Bases

a. The diesel generator lubrication system is designed to provide sufficient lubrication for proper operation of its associated diesel generator under all loading conditions. The system is required to circulate the lube oil to the diesel engine working surfaces and to remove excess heat generated by friction during operation. The system provides oil at the engine surfaces at approximately

120°F during the anticipated long periods of standby duty by use of an electric immersion heater in the cooling water system; and

b. The piping system was constructed to the guidelines of ANSI B31.1 and Seismic Category I requirements.

9.5.7.2 System Description

The lubrication system for each diesel generator is shown in Figure 9.5-1. The lubrication system for each diesel engine is mounted on its diesel generator skid (see Figure 9.5-4) and is a combination of three separate systems. These are the main lubricating oil systems, the piston cooling system, and the scavenging oil system. Each system has its own pump. The main lube oil pump and the piston cooling oil pump are in tandem housings and share a common drive shaft. All three pumps are positive displacement, helical gear type, mounted externally at the front of the engine, and are gear-driven from the engine.

The main lubricating pump supplies oil under pressure to the various moving parts of the engine. The piston cooling pump supplies oil for the cooling of the pistons and lubrication of the piston pin bearing surfaces. After circulation through the engine parts, the lubricating oil flows back to the engine oil sump. The scavenging oil pump takes suction from the engine oil sump and pumps this oil through a filter and lube oil cooler to the strainer sump which supplies the main and piston lubricating pumps. The lube oil cooler is a shell and tube, water-cooled type capable of adequately cooling the engine lube oil when operating at any load point within the engine generation load range. The diesel cooling water acts as the lube oil cooler heat sink.

The engine lubrication system including the lube oil cooler is furnished by the engine manufacturer, Electromotive Diesel, a division of General Motors. The diesel cooling water system, also furnished with the engine, removes the heat from the lube oil coolers. Heat from the diesel cooling water system is removed in the diesel generator cooling water heat exchangers. The characteristics of these heat exchangers are described in Section 9.5.5.

The lubrication system on each engine also has three small lube oil pumps to circulate oil through the engine main bearings and the turbocharger bearings to minimize wear when the engine starts.

The circulating lube oil pump continuously circulates lube oil through the main lube oil system filter, the lube oil cooler (where it is warmed to approximately 120°F) and then through the engine main bearings. This maintains the oil level in the engine just below the camshaft so the oil pressure will increase rapidly when the engine starts from a normal standby condition or on a hot restart.

An ac-driven soak back pump continuously circulates lube oil through the turbocharger bearings to minimize wear when the engine starts and to remove heat from the turbocharger following engine shutdown. A dc-driven soak back pump is arranged in parallel with the ac soak back pump and will automatically start on loss of pressure downstream of the ac and dc pumps.

Instrumentation is provided that alarms locally and activates a "DG Trouble Alarm" in the control room on loss of pressure downstream of any of the pumps.

Abnormal lube oil pressures, temperatures, low sump level, and loss of pressure on the lube oil circulating pump discharge are annunciated.

In the event of a high crankcase pressure, annunciator and computer alarms are provided to alert the operator. A manual shutdown will then be made for diesel generators 1 and 2. For diesel generator 3 (HPCS) an automatic shutdown will occur unless an auto initiation signal is present. The hand-hole or top deck covers, following a high crankcase pressure condition, will not be opened until the engine has been allowed to cool off. This will prevent ignition of oil vapors due to air admittance.

Suitable screens and/or filters in the engine lubrication oil fill pipes prevent entry of foreign material into the engine crankcase. Procedural control, operator training, and careful labeling of fill ports to identify the standard and grade of lubricant to be used ensures that the proper lubricant is used. Lubricant storage containers are similarly labeled to identify contents. Sampling and testing of the lubricating oil to verify conformance to ASTM Standard 0975-74, Grade 2-D, is performed periodically.

The manufacturers recommendations on measures to be taken to maintain the required quality of the lubricating oil provided in the engine instruction manual are followed.

The following sensors and alarms are provided as described below (diesel generator 3 values are in parentheses):

Sensor	Alarm Point	Purpose
Engine lube oil temperature low	115°F (100°F)	To warn of loss of warm-up immersion heater
Engine lube oil temperature high	240°F (230°F)	To warn of loss of cooling water system
Engine lube oil pressure low (alarm)	26 psig (25 psig)	To warn of low oil pressure prior to engine damage

Sensor	Alarm Point	Purpose
Engine lube oil pressure low (shut down)	21 psig (23 psig)	Shut down engine only during test mode to prevent damage
Shutdown engine lube oil pressure low (alarm)	7 psig (7 psig)	Warns of inadequate lube oil pressure in standby mode.

Operator actions to be taken to resolve alarm conditions are provided in appropriate plant procedures.

See Sections 8.3.1.1.7.1.4 and 8.3.1.1.7.2.4 for additional discussion of the diesel generator lubrication system.

9.5.7.3 Safety Evaluation

The diesel generator lubrication system is capable of providing sufficient lubrication under all loading conditions. Each engine oil sump is of adequate size to contain a supply of oil to support 7 days of continuous operation.

The provision for a physically separate lubrication system for each diesel engine satisfies the requirements of the single failure criterion for complete independence and redundance of the onsite power system by avoiding any commonality between diesel generator units. All system equipment is housed inside a Seismic Category I structure containing no high- or moderate-energy piping.

The lubrication system has a low level alarm in the sump to warn of low oil level. The engines are periodically visually inspected for oil leaks to guard against excessive oil leakage.

9.5.7.4 Testing and Inspection Requirements

Preoperational testing was performed as described in Section 14.2. To ensure continued integrity of the diesel generator lubrication system, scheduled testing of equipment and lubrication oil quality is performed as part of the overall engine performance checks at regular intervals in accordance with the Technical Specifications. Periodic inspections are conducted in accordance with plant procedures prepared in conjunction with the manufacturer's recommendations.

9.5.8 DIESEL GENERATOR COMBUSTION AIR INTAKE AND EXHAUST SYSTEM

9.5.8.1 Design Bases

a. The diesel generator combustion air intake and exhaust system is designed to supply clean combustion air to each diesel engine and to exhaust combustion gases in a manner that will not effect the operational function of the diesel engines;

b. Each diesel engine is provided with an independent combustion air intake train which filters and directs air from the exterior of the diesel generator building (south side) to the engine turbocharger, and an independent exhaust train which silences and directs engine exhaust gases to the exterior of the diesel generator building (north side). Since each diesel generator unit has its own independent and separate intake and exhaust train, the single failure criterion is satisfied;

c. The air intake trains are designed to eliminate contaminating substances, such as dust and larger foreign objects, by filtering the air supply through a screened air intake louver, a prefilter, and then through an oil bath air cleaner for the HPCS engine and a cartridge type air cleaner for the engines associated with diesel generators 1 and 2; and

d. The combustion air intake and exhaust system is protected from externally generated missiles (i.e., tornado missiles) by enclosure in a Seismic Category I structure. The piping for the diesel engine intake and exhaust systems is Seismic Category I and is in accordance with the requirements of ANSI B31.1. The exhaust silencers, however, are not ANSI B31.1 material but are ASTM A569 which is suitable for the service. The seismic and quality group classification of components in this system is provided in Section 3.2.

Nondestructive examination in accordance with ASME Section III, ND-5000 requirements, was performed on the welds in the combustion air intake and exhaust systems piping.

9.5.8.2 System Description

The combustion air intake and exhaust system is shown in Figure 9.5-1 and the location within the diesel generator building is shown in Figure 9.5-2.

The air intake trains associated with each diesel generator are housed in separate rooms and each is supplied air from the exterior of the diesel generator building (south side) through a screened air intake louver. Each engine air intake system consists of prefilters, an oil bath type air cleaner for the HPCS engine and cartridge type for the engines associated with diesel

generators 1 and 2, air turning box, the necessary piping, ductwork, and flexible connections to the inlet of the engine turbocharger and aftercooler. An in-line air intake silencer is also provided in the HPCS diesel engine air intake system.

Intake air is cooled in the aftercooler by the engine cooling water system to improve engine operational efficiency. The air intake capacity of each diesel engine associated with diesel generators 1 or 2, at 14.7 psi and ambient temperature, is 10,120 cfm. The air intake flow to the HPCS diesel engine at 14.7 psi and ambient temperature is 10,200 cfm.

The exhaust trains associated with each diesel generator are also housed in separate rooms. Each engine exhaust system consists of an exhaust manifold, turbocharger, exhaust silencer, and the necessary piping and ductwork. Exhaust piping from the diesel-driven air compressor in the HPCS starting air system is connected to the corresponding diesel exhaust line upstream of the exhaust silencer.

Exhaust gases are discharged through the turbocharger from the exhaust manifold and are expelled through ductwork and an exhaust silencer to the exterior of the diesel generator building (north side). The exhaust gas flow from each diesel engine associated with diesel generators 1 or 2 is 23,000 cfm at 770°F and from the HPCS diesel engine is 23,000 cfm at 735°F.

9.5.8.3 Safety Evaluation

The provision of a physically separated and independent intake and exhaust train for each diesel generator unit satisfies the requirements of the single failure criterion for complete independence between units.

Since each air intake and exhaust train is housed within a Seismic Category I building, they are protected from externally generated missiles. No high- or moderate-energy piping is present in the diesel generator building which could present a potential hazard to the operational function of these systems.

The air intake trains are designed so that an adequate supply of quality air is available to the diesel engines as required. To eliminate foreign objects which could restrict the supply of air to an engine, air is drawn into the system from the outside atmosphere through a screened intake louver and prefilter and then through combustion filters; oil bath cleaner for the HPCS engine and a cartridge type air cleaner for the engines associated with diesel generators 1 and 2. The postulated design worst-case dust storm is defined in Section 2.3. The postulated design basis ashfall event is defined as a 20 hour event concurrent with a 2 hour loss of offsite power. The dust storm concern is negligible by comparison with the design worst-case ashfall event due to the smaller amount of particulate accumulation associated with the dust storm. The results of an analysis of the oil bath and cartridge filters for the intake air system shows the adequacy of either of these combustion filters in handling a severe dust storm event without

affecting the diesel generators performance. The results of an analysis for the intake air systems shows the adequacy of the combustion filters and pre-filters in handling an ashfall event without affecting the safe shutdown credited Division 1 and 2 diesel generators. Evaluation of a postulated release from the containment inerting nitrogen tank determined that such a release could stall all three diesels for approximately 8 minutes. This postulated release, however would not result in any conditions that would lead to turbine trip or reactor scram. Because the postulated release from a non-mechanistic failure on the nitrogen tank does not result in a reactor scram or turbine trip, offsite power remains available during the postulated nitrogen tank release and reliance on the diesel generators is not required. This assumption is consistent with guidance in Standard Review Plan (SRP) Sections 3.6.1 and 3.6.2.

There is no appreciable effect on a diesel generator's ability to carry its required load as a result of barometric pressure drops which would effect the capacity of the combustion air intake train.

Recirculation of combustion products from the diesel exhaust to the air intake which could significantly effect the operation of the diesel engine is precluded by the degree of horizontal and vertical separation between the exhaust and air intake (see Figure 9.5-2).

9.5.8.4 Inspection and Testing Requirements

The combustion air intake and exhaust system was checked for system leaks and blockage following initial installation and testing of the diesel engines (see Section 14.2).

Periodic cartridge replacement/cleaning of air intake filter units is performed at regular intervals and when the filter differential pressure observed during engine operation indicates the filter is dirty. Periodic inspection of the adapter and screen assemblies in the exhaust manifold is performed as needed. Routine testing of the diesel engines in accordance with the Technical Specifications verifies the integrity of the air intake and exhaust systems. Periodic inspections are conducted in accordance with plant procedures prepared in conjunction with the manufacturer's recommendations.

9.5.9 PLANT DECONTAMINATION FACILITY

9.5.9.1 Design Bases

The plant decontamination facility is designed to provide a central location for equipment decontamination in a relatively safe and efficient environment. Safety of personnel has been carefully considered and built into all aspects of the operation. Local filtration and increased capability, per recommendations of the Handbook of the American Conference of Governmental Industrial Hygienists, have been incorporated into the existing radwaste building ventilation system to minimize airborne contamination. Each of the facility components has been strategically located to provide a safe, efficient, and relatively quiet process from entry to

disassembly, cleaning, reassembly, and exit. Controls and indication have been positioned in a central location to minimize setup time and thus reduce personnel exposure. The decontamination facility has been designed to Quality Class II and Seismic Category II requirements.

9.5.9.2 System Description

The decontamination facility is located in the radwaste building on the 467-ft el. adjacent to the contaminated tool room (see Figure 9.5-5). This facility consists of the equipment necessary to enable decontamination of a variety of plant components, tools, and other portable equipment.

To minimize airborne contamination and process fumes in the decontamination room, cleaning tanks are provided with individual exhaust hoods per recommendations of the Ventilation Handbook of Governmental Industrial Hygienists. The exhaust system for each hood is complete with its own high-efficiency particulate air (HEPA) filter unit and exhaust fan. The air from the exhaust fans is ducted to the radwaste building exhaust system (see Section 9.4.3.2 for system description).

Differential pressure switches are provided across the prefilters and the HEPA filters to annunciate in case of a dirty filter condition. The fan flow is controlled by the fan differential pressure controller which controls a modulating damper at the fan discharge. All the fans are located in the contaminated tool room to minimize noise levels in the decontamination room during operation.

An automatic sprinkler system has been installed for protection against the unlikely event of a fire. Curbs have been installed at all doors to the decontamination room, the equipment hatch, and the contaminated tool room to contain flooding caused by a major spill or activation of the sprinkler system. A decontamination sink and an emergency eyewash shower station have been installed to permit immediate treatment in case of a splashing accident.

9.5.9.3 Safety Evaluation

The plant decontamination facility has no safety function. Malfunction or failure of the decontamination facility will not impair normal or emergency plant operations.

9.5.9.4 Testing and Inspection Requirements

On installation and periodically thereafter, HEPA filters are given in-place DOP tests in accordance with ANSI N 510-1980, Testing of Nuclear Air Cleaning Systems.

9.5.10 REFERENCES

9.5-1 H. R. Clay, "Power Generation Control Complex Design Criteria and Safety Evaluation," General Electric NEDO-10466, Revision 1, September 1977.

9.5-2 Electro-Motive Division, General Motors, LaGrange, IL, "Stationary Power Operating Manual," Volume 11, 2nd Edition, June 1971.

9.5-3 SER Licensing Condition No. 9. Letter from G. D. Bouchey, Supply System, to A. Schwencer, NRC, dated June 4, 1982 (G02-82507).

Table 9.5-1

REDACTED

Table 9.5-1

REDACTED

Table 9.5-2

Locations of Fixed Emergency Lighting

Safe Shutdown Equipment Areas/Access Egress	Normal-Emergency AC (DG Backed)	DC (125V Plant Battery Backed)	Battery Packs	
			Life Safety (1.5-hr Batteries)	(8-hr Batteries)
RADWASTE BUILDING				
Access route from the Control Room to RSD Room via stairwell A-7	YES	YES		EBU
Remainder of stairwell A-7 for PFSS event mitigation	YES		EBU	EBU
Control Room	YES	YES	EBU	EBU
RSD Room	YES	YES		EBU
ARSD Panel	YES			EBU
SM-8	YES			EBU
SM-7	YES			
Battery Chargers Div. 2	YES		ERB	
RPS 1A	YES		EBU	
RPS 1B	YES		EBU	
125 VDC Div. 1 Battery			ERB	
125 VDC Div. 2 Battery			ERB	
Remainder of RW el. 467 ft for PFSS event mitigation	YES		EBU	EBU
RW el. 525 ft PFSS event mitigation	YES		EBU, ERB	
Remainder of RW	YES		EBU, ERB, High Intensity Discharge Light	

Table 9.5-2

Locations of Fixed Emergency Lighting (Continued)

Safe Shutdown Equipment Areas/Access Egress	Normal-Emergency AC (DG Backed)	DC (125V Plant Battery Backed)	Battery-Packs	
			Life Safety (1.5-hr Batteries)	(8-hr Batteries)
TURBINE BUILDING				
Corridor C121 at el. 441 ft	YES			EBU
Corridor C120 at el. 441 ft (remainder of the access route from the Control Room to the DG Bldg. For PFSS event mitigation)	YES			EBU
SM-1, 2, 3; SH-5, 6 at el. 471 ft	YES		EBU, High Intensity Discharge Light	
Remainder of TG	YES		EBU, ERB, High Intensity Discharge Light	
DIESEL GEN. BUILDING				
Corridor D104 at el. 441 ft	YES			
Div. 1 DG	YES		EBU	
Div. 2 DG	YES		EBU	EBU
HPCS DG, SM-4	YES		EBU	
SSW PUMPHOUSE				
Pumphouse 1A (Div. 1)				
Pumphouse 1B (Div. 2 & 3)				

Table 9.5-2

Locations of Fixed Emergency Lighting (Continued)

Safe Shutdown Equipment Areas/Access Egress	Normal-Emergency AC (DG Backed)	DC (125V Plant Battery Backed)	Battery-Packs	
			Life Safety (1.5-hr Batteries)	(8-hr Batteries)
REACTOR BUILDING				
Access route via stairwell A-6 for PFSS event mitigation	YES		EBU	
Fuel Pool at el. 606 ft	YES		EBU, High Intensity Discharge Light	
MCCs at el. 572 ft	YES		EBU	
SSW Valves at el. 548 ft	YES		EBU	
RWCU-V-32 at el. 501 ft	YES		EBU	
MCCs at el. 522 ft	YES		EBU	
RHR-P-3 at el. 422 ft	YES		EBU	
LPCS-P-2 at el. 422 ft	YES		EBU	
Access Route from corridor C402 at el. 501 ft via stairwell S3 to el. 522 ft	YES		EBU	
Remainder of RB	YES		EBU	
TECHNICAL SUPPORT CENTER			EBU	

EBU Fixed Emergency Battery Units (Life Safety Units 1.5-hr, PFSS Units 8-hr)
ERB Fixed "Emergency Remote Ballast" with 1.5-hr Battery

Table 9.5-3

Diesel Generator Fuel Oil Storage and Transfer System[a]

Number	3
Capacity (gal)	
Diesel generator 1A or 1B	60,000
HPCS diesel generator	50,000
Type	Horizontal - buried
Shell material	ASME SA-515 Grade 70
Shell thickness (in.)	3/4-15/16
Design temperature	150
Design pressure	Atmosphere plus static head
Corrosion allowance (in.)	3/16
Code	ASME Section III, Class 3, April 1973
Seismic Category	I
Diesel Oil Day Tank	
Number	3
Capacity (gal)	3000
Type	Horizontal
Shell material	ASME SA-285 Grade C
Shell thickness (in.)	3/8
Design pressure	Atmosphere plus static head
Corrosion allowance (in.)	3/16
Code	ASME Section III, Class 3, April 1973
Seismic Category	I
Diesel Oil Transfer Pumps	
Number	3
Type	Vertical turbine
Rated speed (rpm)	3500
Rated capacity (gpm)	25
Total dynamic head (ft)	51
Code	ASME Section III, Class 3, April 1973
Seismic Category	I

[a]Capacities are on a per component basis.

Table 9.5-4

Diesel Generator Heat Exchanger
Design and Performance Data

	Shell Side	Tube Side
Diesel generators 1A and 1B		
Fluid circulated	Engine water	Standby service water
Number per engine	1	1
Flow (gpm)	1100	825
Temp in (°F)	190	95
Temp out (°F)	175.4	113.9
Fouling factor	0.0005	0.001
Heat load (Btu/hr)	7,800,000[a]	
Design temperature (°F)	300	300
HPCS generators 1C		
Fluid circulated	Engine water	Standby service water
Number per engine	1	1
Flow (gpm)	1100	910
Temp in (°F)	187	95
Temp out (°F)	170	118
Fouling factor	0.0005	0.00185
Heat load (Btu/hr)	8,872,000[a]	
Design temperature (°F)	250	200

[a] This heat rejection value is based on 110% of the continuous rating of the diesel generator.

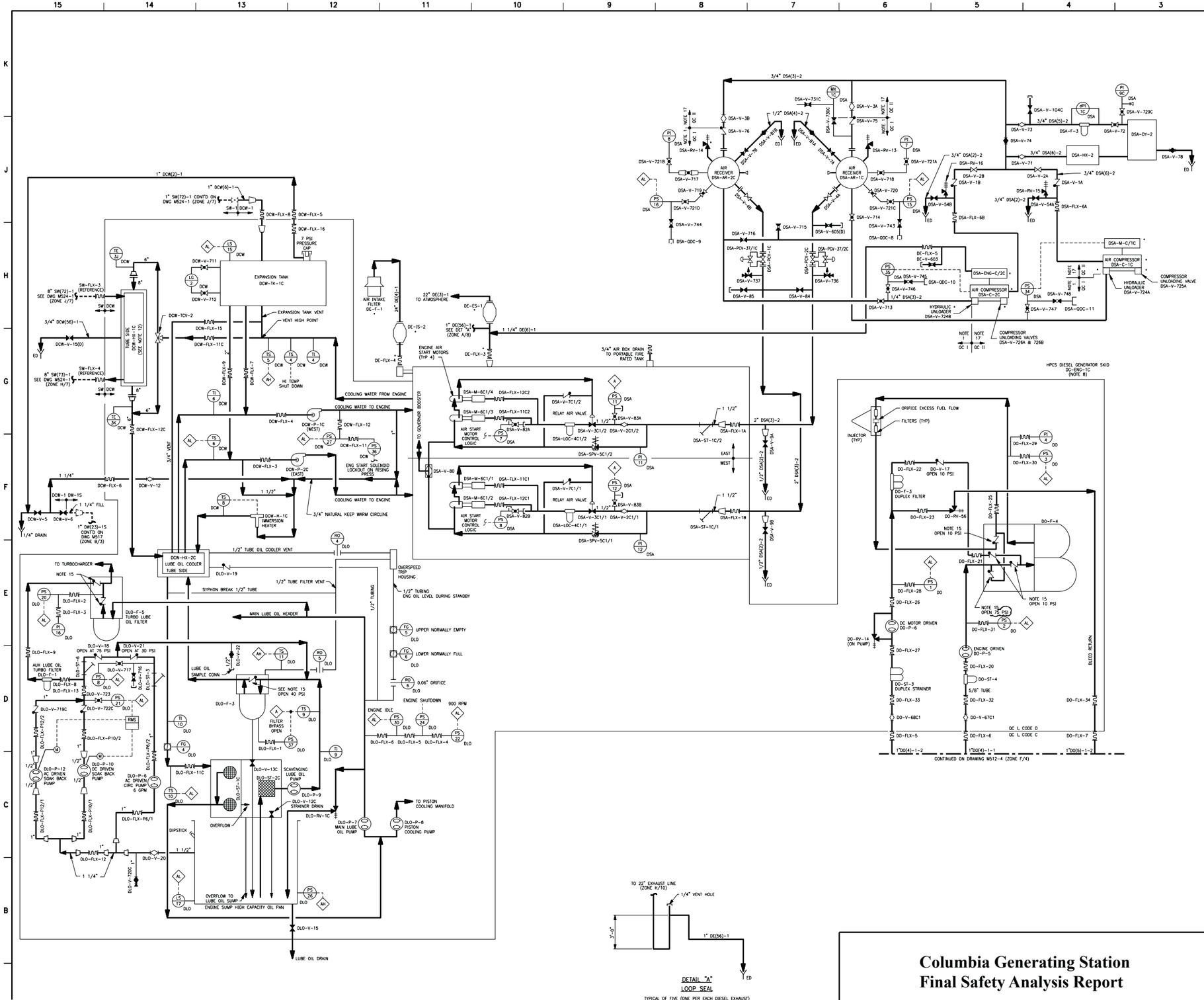

NOTES:

1. ALL DIESEL STARTING AIR (DSA), DIESEL COOLING WATER (DCW), AND DIESEL EXHAUST (DE) PIPING AND ASSOCIATED COMPONENTS ON THIS DRAWING INCLUDED IN CONTRACTS 2, 53 AND 215 EXCEPT AS NOTED IN NOTE 17 ARE CLASSIFIED:

QUALITY CLASS	I
CODE GROUP	D
SEISMIC CATEGORY	I

2. ALL DIESEL OIL (DO) PIPING AND ASSOCIATED COMPONENTS ON THIS DRAWING EXCEPT AS NOTED IN NOTES 11 AND 22 ARE CLASSIFIED:

QUALITY CLASS	I
CODE GROUP	C FOR CONTRACT 215
CODE GROUP	D FOR CONTRACT 2 AND 53
SEISMIC CATEGORY	I

3. (DELETED)
4. ALL PIPING AND FITTINGS FOR DE(1)-1 AND DE(2)-1 ARE SUPPLIED BY CONTRACT 53 AND SUPPORTED AND ERECTED BY CONTRACT 215.
5. DELETED
6. EQUIPMENT TAG NUMBER WITH SUFFIX A1 REFERS TO NUMBER 1 ENGINE OF DIESEL GENERATOR DG-ENG-1A. SUFFIX A2 REFERS TO NUMBER 2 ENGINE OF DIESEL GENERATOR DG-ENG-1A. SUFFIX B1 REFERS TO NUMBER 1 ENGINE OF DIESEL GENERATOR DG-ENG-1B AND SUFFIX B2 REFERS TO NUMBER 2 ENGINE OF DIESEL GENERATOR DG-ENG-1B.
7. ALL ITEMS MARKED * ARE FURNISHED WITH ASSOCIATED DG SKID SUPPLIER.
8. ALL PIPING COMPONENTS AND INSTRUMENTATION SHOWN WITHIN THE CONFINES OF THE ENGINE SKID OR AIR RECEIVER SKID ARE SUPPLIED BY THE DG SUPPLIER AND ARE:

QUALITY CLASS	I
CODE GROUP	D
SEISMIC CATEGORY	I

9. (DELETED)
10. (DELETED)
11. ALL DIESEL OIL(DO) PIPING AND ASSOCIATED COMPONENTS ON THIS DRAWING INCLUDED IN CONTRACT 215 AND REFERRED TO BY THIS NOTE ARE CLASSIFIED:

QUALITY CLASS	II
CODE GROUP	D
SEISMIC CATEGORY	II

12. DCW-HX-1C IS SUPPLIED BY CONTRACT 2 AND IS ASME SECTION VIII DIVISION 1, DCW-HX-1A1, 1A2, 1B1, 1B2 WERE SUPPLIED BY CONTRACT 53 AND ARE ASME III, 3.
13. (DELETED)
14. CODE BREAK DEFINITIONS FOR THERMOWELLS ARE SHOWN ON DRAWING M610 "INSTALLATION OF THE THERMOWELLS AND SAMPLE PROBES".
15. ALL ITEMS REFERRING TO THIS NOTE ARE INSTALLED WITHIN THE FILTER MANIFOLD.
16. (DELETED)
17. DSA PIPING & EQUIPMENT REFERRED TO BY THIS NOTE ARE CLASSIFIED:

QUALITY CLASS	II
CODE GROUP	D
SEISMIC CATEGORY	I*
* SEISMIC MOUNTING ONLY	

18. THE DIESEL LUBE OIL (DLO) SYSTEM FOR DG-ENG-1A & 1B IS A DUPLICATE OF STEWART & STEVENSONS VENDOR DRAWING NUMBER 209 (CVI NUMBER 53-00,53) AS MODIFIED BY POWER SYSTEMS DRAWING 6911M03002 SHEET 1 THRU SHEET 4 (CVI NUMBER 332-00,1,1 THRU 332-00,1,4 RESPECTIVELY).
19. (DELETED)
20. THE DIESEL LUBE OIL PRESSURE SWITCHES ARE INSTALLED BUT JUMPER IS INSTALLED TO BYPASS THEM. SEE ZONES D1 AND E15 ON SHEETS 2 AND 3.
21. THESE DIESEL LUBE OIL PRESSURE SWITCHES ARE SPARED IN PLACE. SEE ZONES D2 AND D15 ON SHEETS 2 AND 3.
22. ALL DIESEL OIL (DO) PIPING AND ASSOCIATED COMPONENTS ON THIS DRAWING INCLUDED IN CONTRACT 215 AND REFERRED TO BY THIS NOTE ARE CLASSIFIED:

QUALITY CLASS	II
CODE GROUP	D*
SEISMIC CATEGORY	I

23. SEE DWG M501 FOR FLOW DIAGRAM LEGENDS, SYMBOLS AND ABBREVIATIONS.

LEGEND:

1. ALL VALVES SUFFIXED WITH A (V) DENOTE A VENT VALVE.
2. ALL VALVES SUFFIXED WITH A (D) DENOTE A DRAIN VALVE.
3. ALL VALVES SUFFIXED WITH A (TH) DENOTE A THROTTLED VALVE.

Columbia Generating Station
Final Safety Analysis Report

Diesel Oil and Miscellaneous Systems

Draw. No. M512-1	Rev. 48	Figure 9.5-1.1

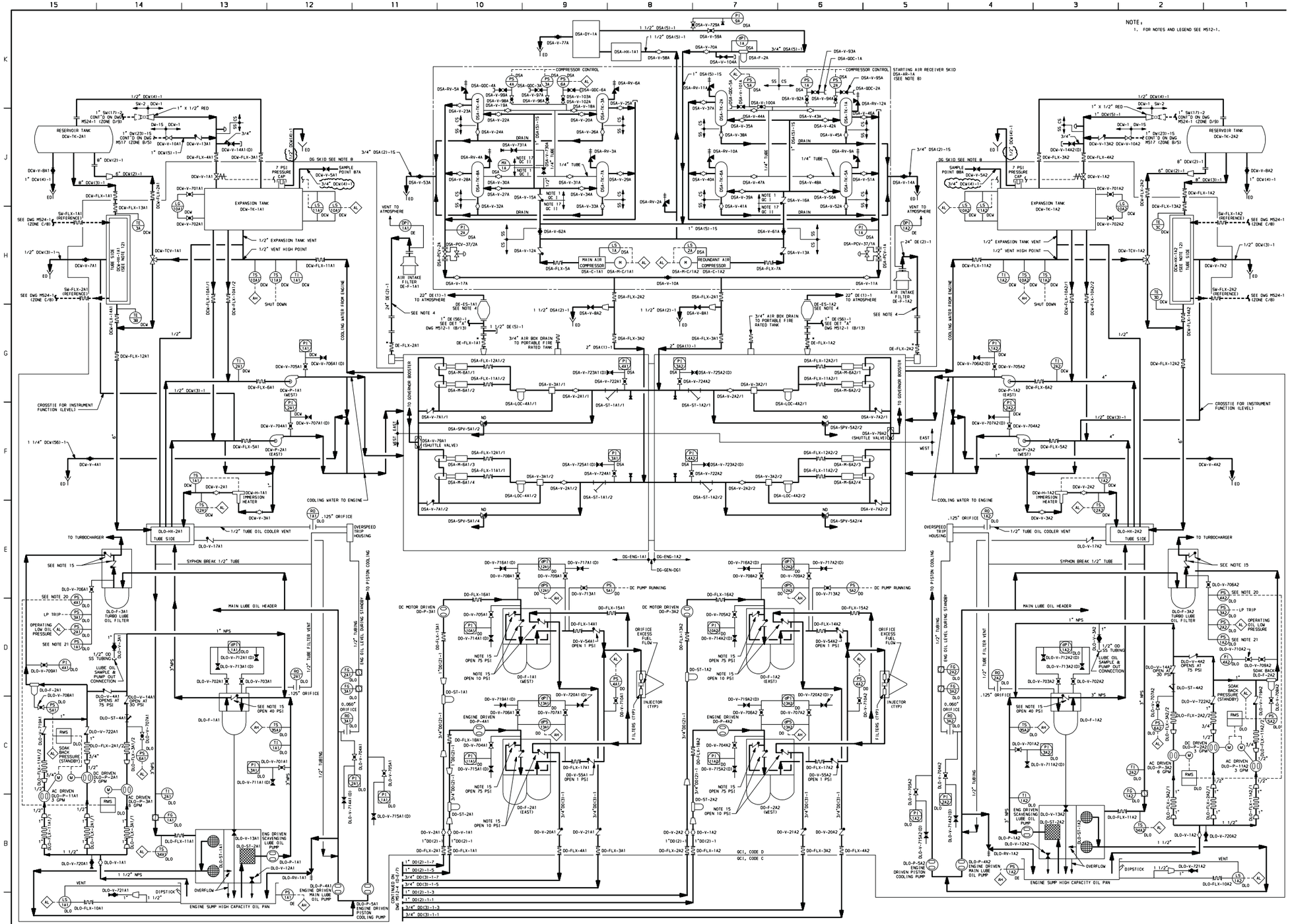

Columbia Generating Station
Final Safety Analysis Report

Diesel Oil and Miscellaneous Systems

Draw. No. M512-2	Rev. 41	Figure 9.5-1.2

Form No. 960690ai

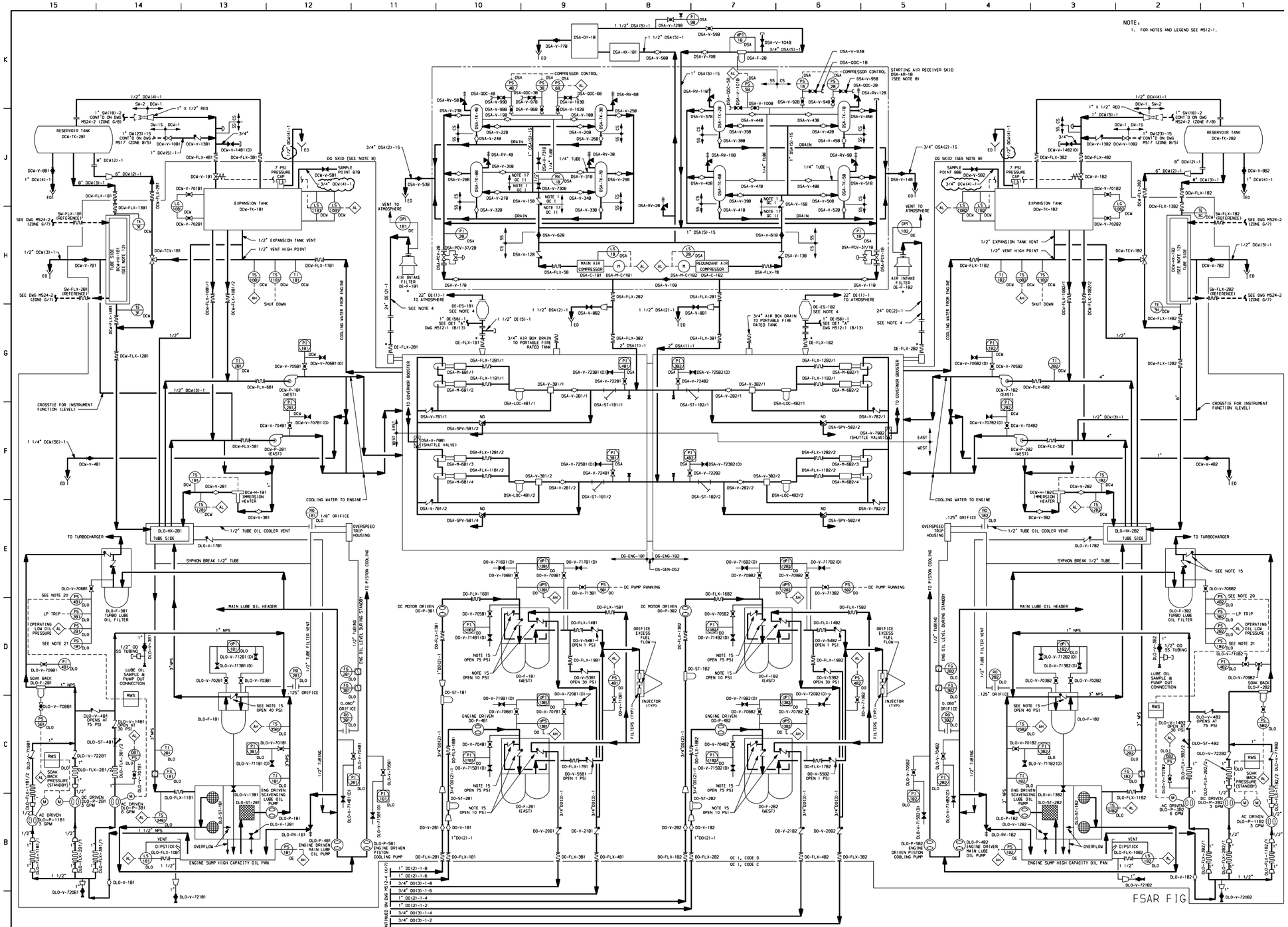

Columbia Generating Station
Final Safety Analysis Report

Diesel Oil and Miscellaneous Systems

Draw. No. M512–3	Rev. 42	Figure 9.5–1.3

Form No. 960690ai

TABLE 1

FILTER EPN	EPN					
	"A"	"B"	"C"	"D"	"E"	"F"
DO-F-5	DO-V-725	DO-V-726	DO-V-737	DO-V-738	DO-V-727	DO-V-728
DO-F-6	DO-V-739	DO-V-729	DO-V-740	DO-V-741	DO-V-730	DO-V-731
DO-F-7	DO-V-742	DO-V-732	DO-V-743	DO-V-744	DO-V-733	DO-V-734

NOTES:

1. FOR GENERAL NOTES AND LEGEND SEE DRAWING M512-1.
2. ALL INSTRUMENTATION ON THIS DRAWING TO BE IDENTIFIED BY PREFIX "DO" UNLESS SPECIFICALLY NOTED OTHERWISE.
   EXAMPLE: FO
3. DIESEL OIL STORAGE AND DAY TANK VENTS TO BE PIPED OUTSIDE OF BUILDING.
4. THIS DIESEL FUEL OIL VALVE IS NO LONGER FUNCTIONAL. INTERNAL PARTS HAVE BEEN REMOVED.
5. 2 1/2" DROP PIPE INSTALLED INSIDE 4" PIPE, SEE DRAWING D-SPL-013 FOR DETAIL.
6. DO-LS-15 & 16 ARE DEACTIVATED AND SPARED IN PLACE PER EC 7264

DETAIL-1
(SEE TABLE 1 FOR EPN #)

DIESEL OIL DAY TANK (DO-TK-3B)

DIESEL OIL STORAGE TANK (DO-TK-1B)

FILTER POLISHER SKID * (DO-FP-1)

DIESEL OIL DAY TANK (DO-TK-3A)

DIESEL OIL STORAGE TANK (DO-TK-1A)

DIESEL OIL DAY TANK (DO-TK-3C)

DIESEL OIL STORAGE TANK (DO-TK-2)

Columbia Generating Station Final Safety Analysis Report	**Diesel Oil and Miscellaneous Systems**		
	Draw. No. M512–4	Rev. 15	Figure 9.5–1.4

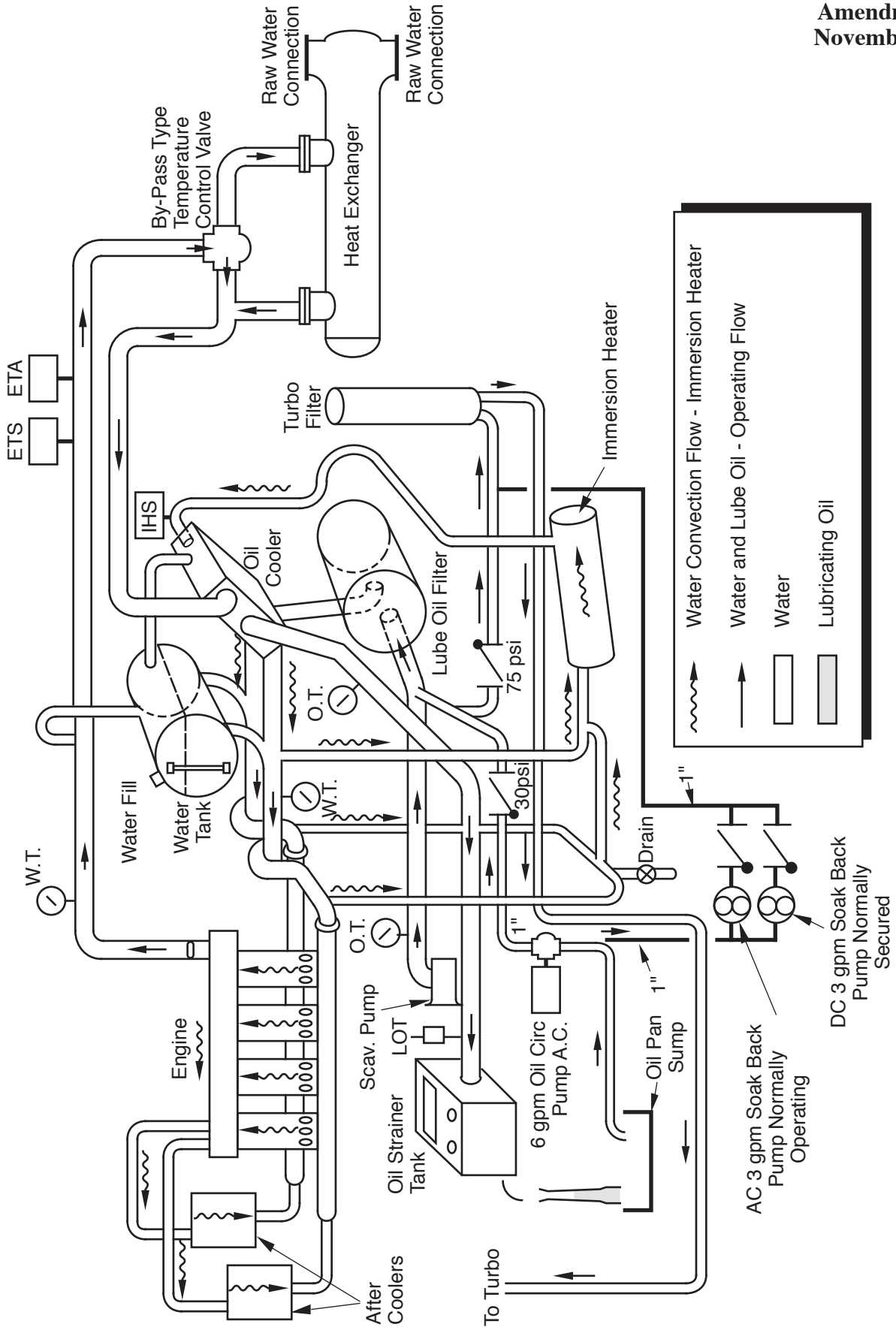

Columbia Generating Station
Final Safety Analysis Report

Supporting Systems - Lubricating Oil System and Engine Cooling Water System with Immersion Heater System - Turbocharged Units

Draw. No. 950021.37	Rev.	Figure 9.5-3

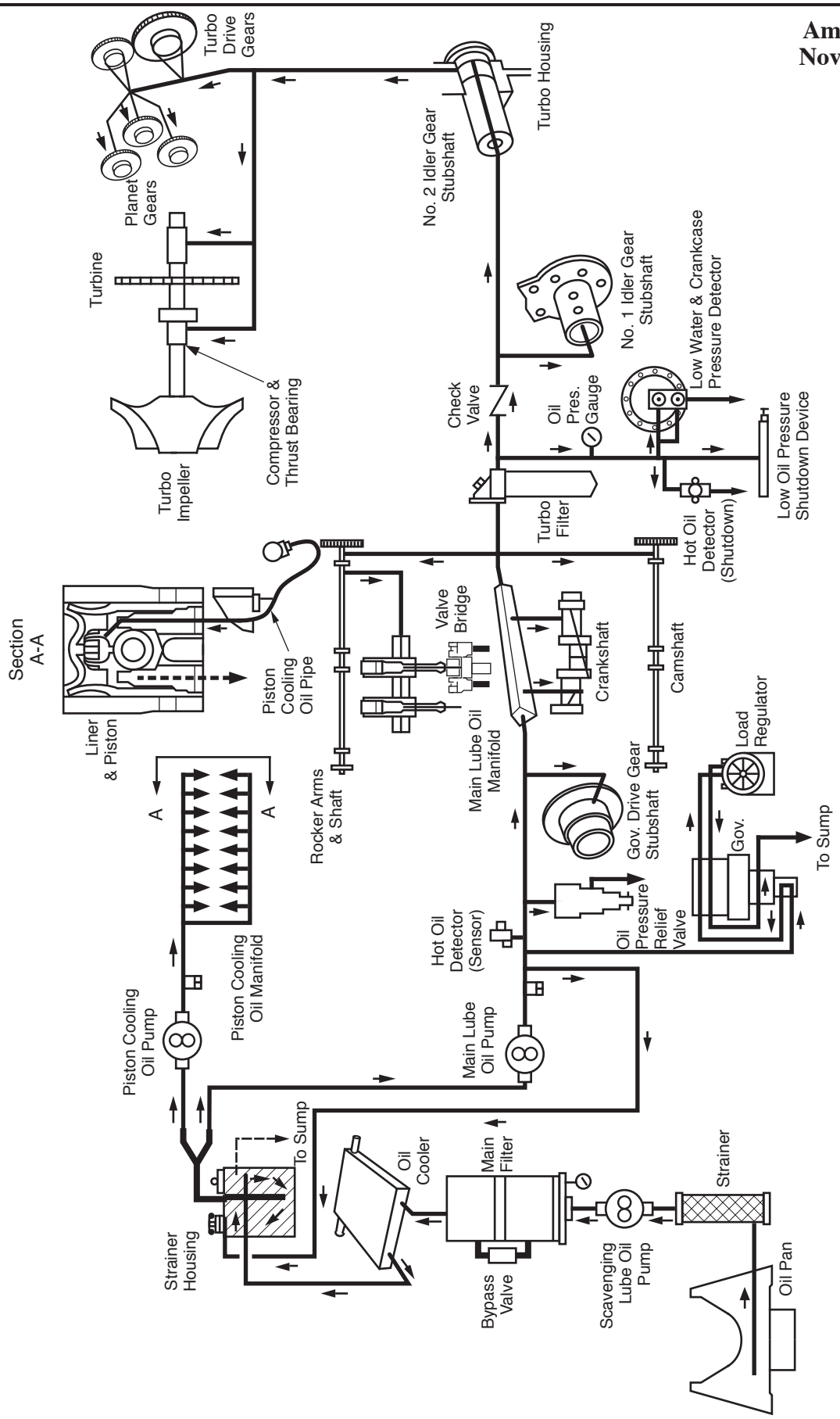

Columbia Generating Station Final Safety Analysis Report	**Normal Engine Operation Lube Oil System - Turbocharged Engines**		
	Draw. No. **950021.38**	Rev.	Figure **9.5-4**

Form No. 960690

NOTE:
1. FOR SECTIONS SEE DRAWING M919

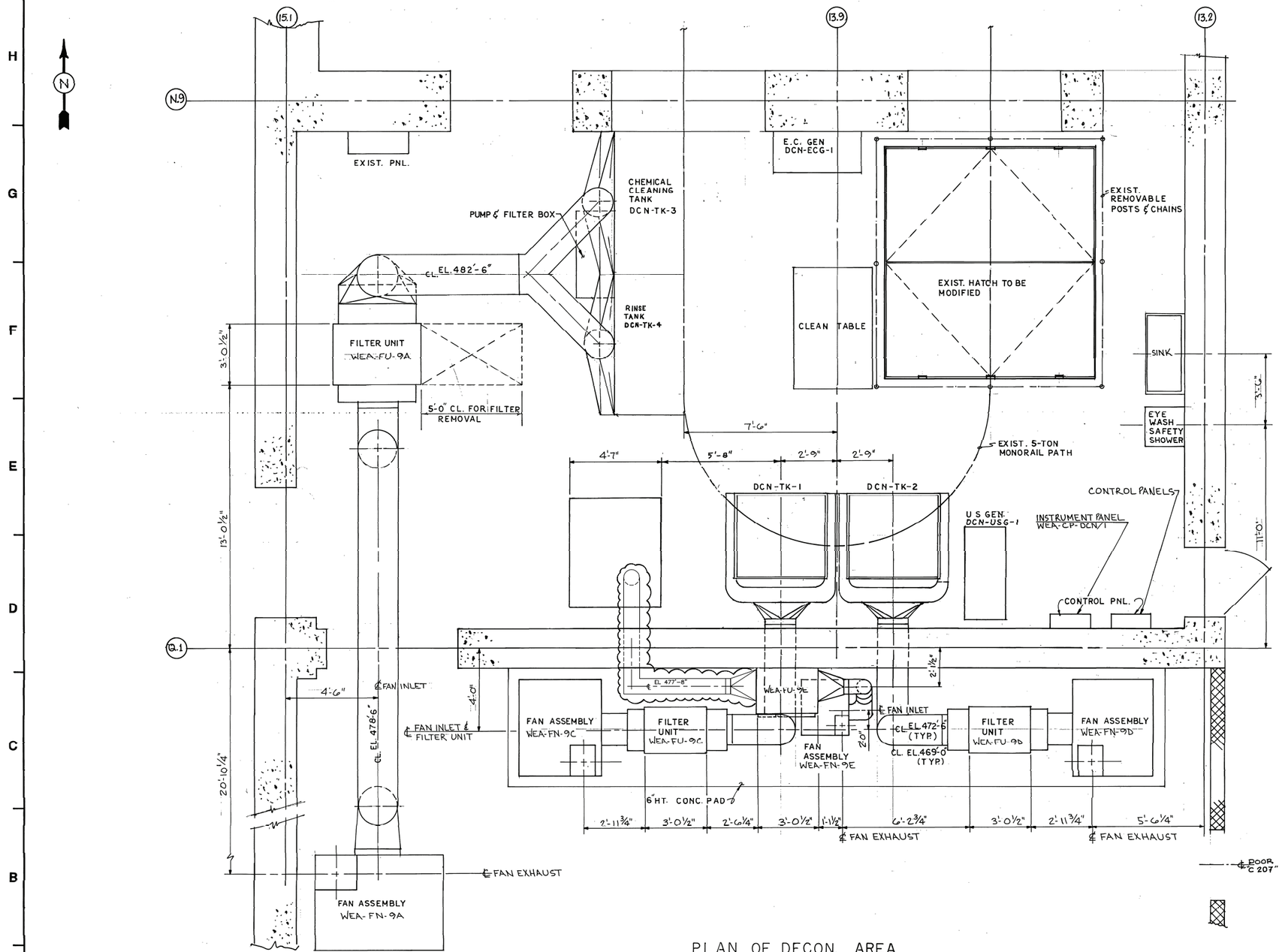

PLAN OF DECON. AREA
FLOOR EL. 467'-0"
SCALE 1/2" = 1'-0"

GRAPHIC SCALE:
0" 6" 12" 2' 4' 6'
SCALE 1/2" = 1'-0"

Columbia Generating Station Final Safety Analysis Report	Decontamination Area General Arrangement Plan		
	Draw. No. M918	Rev. 3	Figure 9.5-5

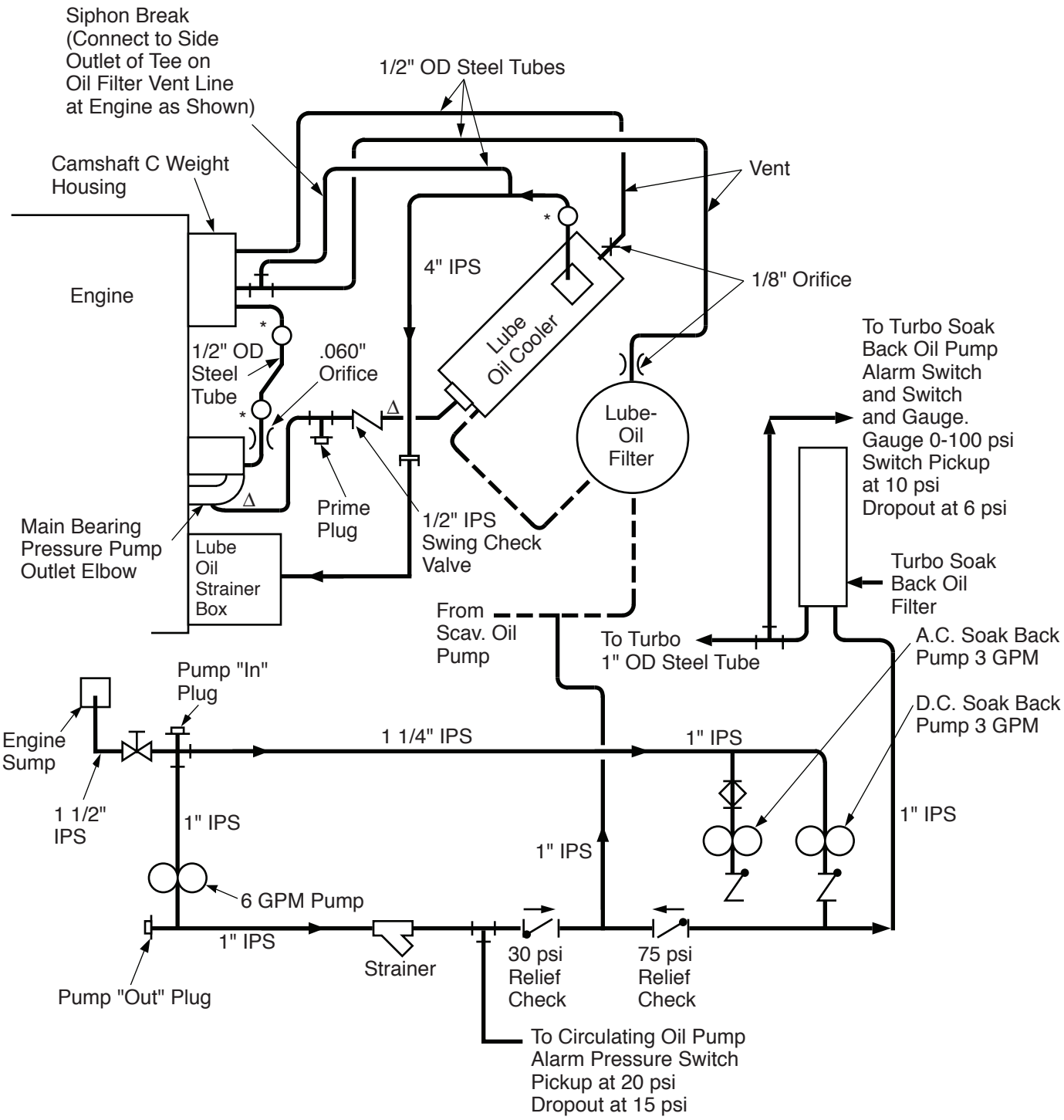

* Indicates Sight Glass (Vertical Height Critical)

Δ 5/8" OD Steel Tube on 20-645E4

Columbia Generating Station Final Safety Analysis Report	**Schematic Diagram - Standby Lube Oil Circulating and Keep Full System**		
	Draw. No. **920843.92**	Rev.	Figure **9.5-6**

Chapter 10

STEAM AND POWER CONVERSION SYSTEM

TABLE OF CONTENTS

Section — Page

10.1 SUMMARY DESCRIPTION 10.1-1

10.2 TURBINE GENERATOR 10.2-1
10.2.1 DESIGN BASIS 10.2-1
10.2.2 SYSTEM DESCRIPTION 10.2-1
10.2.3 TURBINE DISK INTEGRITY 10.2-6
10.2.4 SAFETY EVALUATION 10.2-6

10.3 MAIN STEAM SUPPLY SYSTEM 10.3-1
10.3.1 DESIGN BASES 10.3-1
10.3.2 SYSTEM DESCRIPTION 10.3-1
10.3.3 SAFETY EVALUATION 10.3-2
10.3.4 INSPECTION AND TESTING REQUIREMENTS 10.3-3
10.3.5 WATER CHEMISTRY 10.3-3
10.3.6 STEAM AND FEEDWATER SYSTEM MATERIALS 10.3-3
10.3.6.1 Fracture Toughness 10.3-3
10.3.6.2 Materials Selection and Fabrication 10.3-3

10.4 OTHER FEATURES OF STEAM AND POWER CONVERSION SYSTEM 10.4-1
10.4.1 MAIN CONDENSER 10.4-1
10.4.1.1 Design Bases 10.4-1
10.4.1.2 System Description 10.4-2
10.4.1.3 Safety Evaluation 10.4-2
10.4.1.4 Tests and Inspections 10.4-4
10.4.1.5 Instrumentation 10.4-4
10.4.2 MAIN CONDENSER EVACUATION SYSTEM 10.4-5
10.4.2.1 Design Bases 10.4-5
10.4.2.2 System Description 10.4-5
10.4.2.3 Safety Evaluation 10.4-6
10.4.2.4 Tests and Inspections 10.4-6
10.4.2.5 Instrumentation 10.4-6
10.4.3 TURBINE GLAND SEALING SYSTEM 10.4-7
10.4.3.1 Design Bases 10.4-7
10.4.3.2 System Description 10.4-7
10.4.3.3 Safety Evaluation 10.4-8
10.4.3.4 Tests and Inspection 10.4-9

Chapter 10

STEAM AND POWER CONVERSION SYSTEM

TABLE OF CONTENTS (Continued)

Section Page

10.4.3.5 Instrumentation 10.4-9
10.4.4 TURBINE BYPASS SYSTEM 10.4-9
10.4.4.1 Design Bases 10.4-9
10.4.4.2 System Description 10.4-10
10.4.4.3 Safety Evaluation 10.4-11
10.4.4.4 Tests and Inspections 10.4-11
10.4.4.5 Instrumentation 10.4-11
10.4.5 CIRCULATING WATER SYSTEM 10.4-12
10.4.5.1 Design Bases 10.4-12
10.4.5.2 System Description 10.4-12
10.4.5.3 Safety Evaluation 10.4-13
10.4.5.4 Tests and Inspections 10.4-16
10.4.5.5 Instrumentation 10.4-17
10.4.6 CONDENSATE FILTER DEMINERALIZER SYSTEM 10.4-17
10.4.6.1 Design Bases 10.4-17
10.4.6.2 System Description 10.4-19
10.4.6.3 Safety Evaluation 10.4-20
10.4.6.4 Tests and Inspections 10.4-20
10.4.6.5 Instrumentation 10.4-20
10.4.6.6 Demineralizer Resins 10.4-21
10.4.6.7 Water Chemistry Analyses 10.4-21
10.4.7 CONDENSATE AND FEEDWATER SYSTEMS 10.4-22
10.4.7.1 Design Bases 10.4-22
10.4.7.2 System Description 10.4-22
10.4.7.3 Safety Evaluation 10.4-24
10.4.7.4 Tests and Inspections 10.4-24
10.4.7.5 Instrumentation 10.4-25
10.4.8 STEAM GENERATOR BLOWDOWN SYSTEMS 10.4-25
10.4.9 AUXILIARY FEEDWATER SYSTEM 10.4-25
10.4.10 HYDROGEN WATER CHEMISTRY SYSTEM 10.4-25
10.4.10.1 Design Bases 10.4-25
10.4.10.2 System Description 10.4.26
10.4.10.2.1 Hydrogen Storage and Supply Facility 10.4-26
10.4.10.2.2 Hydrogen and Air Injection 10.4-27
10.4.10.3 Safety Evaluation 10.4-27
10.4.10.4 Tests and Inspections 10.4-30

Chapter 10

STEAM AND POWER CONVERSION SYSTEM

TABLE OF CONTENTS (Continued)

Section Page

10.4.10.5 Instrumentation 10.4-30

Chapter 10

STEAM AND POWER CONVERSION SYSTEM

LIST OF TABLES

Number	Title	Page
10.1-1	Design and Performance Characteristics of Power Conversion System	10.1-3
10.4-1	Feedwater System Equipment Characteristics	10.4-33

Chapter 10

STEAM AND POWER CONVERSION SYSTEM

LIST OF FIGURES

Number	Title
10.1-1	1259001 kW Net Load Heat Balance
10.1-2	Deleted
10.2-1	Acceptable Range for Control Valve Normal Closure Motion
10.2-2	Turbine Stop Valve Closure Characteristic
10.2-3	Turbine Control Valve Fast Closure Characteristic
10.2-4	Alternating Current (ac) Turbine Generator Gas Diagram
10.2-5	Alternating Current (ac) Turbine Generator Gas Supply Outline
10.2-6	Electrohydraulic HP Fluid and Lube Oil Diagram (Sheets 1 through 3)
10.2-7	Turbine Generator Control Elementary Diagram (Sheets 1 through 3)
10.3-1	Main Steam Supply System (Sheets 1 through 3)
10.3-2	Main Steam Supply System Piping
10.4-1	Main Condenser Evacuation System
10.4-2	Turbine Gland Sealing System
10.4-3	Turbine Bypass Valve Outline
10.4-4	Flow Diagram - Circulating Water System - Turbine Generator Building and Yard (Sheets 1 through 3)
10.4-5	Flow Diagram - Radioactive Waste System Condensate Demineralization
10.4-6	Flow Diagram - Condensate and Feedwater Systems (Sheets 1 through 3)

Chapter 10

STEAM AND POWER CONVERSION SYSTEM

LIST OF FIGURES (Continued)

Number	Title
10.4-7	Flow Diagram - Extraction Steam and Heater Vents - Turbine Generator Building (Sheets 1 and 2)
10.4-8	Flow Diagram - Heater Drain System - Turbine Generator Building (Sheets 1 through 3)
10.4-9	Flow Diagram – Hydrogen Water Chemistry – Turbine Generator Building and Hydrogen Storage and Supply Facility (Sheets 1 through 3)

Chapter 10

STEAM AND POWER CONVERSION SYSTEM

10.1 SUMMARY DESCRIPTION

The steam and power conversion system is designed to produce electrical energy through conversion of a portion of the thermal energy contained in the steam supplied from the reactor, to condense the main turbine exhaust steam, and to return condensate to the reactor as heated feedwater with a major portion of its gaseous dissolved and particulate impurities removed.

The power conversion system uses the Rankine steam cycle with a closed regenerative feedwater heating cycle. It has the capability to accept 105% of the reactor's rated steam flow. Steam leaves the reactor vessel at 1035 psia. Steam enters the turbine at 999 psia with a 0.30% moisture content. The turbine is a tandem-compound turbine generator having a six-flow exhaust end. Steam is exhausted into a triple pressure condenser designed for a 2.4-in. Hg average backpressure and is condensed with circulating water cooled by mechanical draft cooling towers. Six stages of regenerative feedwater heating are provided, four heated with extraction steam from the low pressure turbines and two from the high pressure turbine. The final design feedwater temperature at normal full load is 423°F.

The major components of the steam and power conversion system are the turbine generator, main condenser, condensate pumps, condensate booster pumps, mechanical vacuum pumps, steam jet air ejectors, turbine gland sealing system (which includes gland seal steam evaporators and condenser), turbine bypass system, condensate filter demineralizers, turbine driven reactor feed pumps, feedwater heaters, and condensate storage facilities. The turbine cycle heat balance for rated 102.4% power is given in Figure 10.1-1. This figure is representative of the overall power conversion system.

The saturated steam produced by the boiling water reactor is passed through the high pressure turbine where the steam is expanded and is then exhausted to two moisture separator/reheaters (two reheat stages) arranged in parallel. The moisture separators remove the moisture content of the steam and superheat the steam before it enters the low pressure turbines where the steam is expanded further.

Steam for the first-stage reheater is taken from the first extraction point of the high pressure turbine while steam for the second-stage reheater is taken from the main steam header. From the low pressure turbines, the steam is exhausted into the main condenser where it is condensed and deaerated. The condensate pumps take suction from the condenser hotwell and deliver the condensate through the gland seal steam condenser, steam-jet air ejector condenser, offgas condenser, and condensate demineralizers to the condensate booster pump suction. The condensate booster pumps then discharge through the low pressure feedwater heater trains to

the reactor feedwater pumps. The reactor feedwater pumps supply feedwater through the high pressure feedwater heaters to the reactor. Steam for heating the feedwater in the heating cycle is supplied from turbine extractions. The drains from the feedwater heaters, the reheaters, and the moisture separators are cascaded to the next lower pressure feedwater heater and finally discharged to the condenser.

The ability of the plant to follow system loads depends on the adjustment of the reactor power level. The steam admission valves are controlled by the initial pressure regulator so that the turbine receives the proper amount of steam required for the load demand. The turbine speed governor, however, may override the initial pressure regulator to close the steam admission valves if an increase in system frequency or loss of generator load causes an increase in turbine speed. Reactor steam in excess of that which the admission valves will pass is bypassed directly to the main condenser through pressure controlled bypass valves. Load rejection in excess of bypass capacity causes the reactor safety/relief valves to open.

The main turbine, main condenser, and moisture separator/reheaters are located in a shielded area with controlled access to limit personnel exposure.

The portions of the power conversion system which constitute part of the reactor coolant pressure boundary are the main steam lines extending from the reactor pressure vessel to the outermost containment isolation valve.

Table 3.2-1 indicates the safety class, quality group classification, and seismic category of the power conversion system. Environmental design bases are discussed in Section 3.11.

Table 10.1-1 presents a summary of important design and performance characteristics of the steam and power conversion system.

The design of various steam and condensate instrumentation systems are based on the need to monitor and control normal power generation system functions such as level, flow, pressure, and temperature. The instrumentation provides information that enables the control room operator to start up, operate, and shut down these systems.

Table 10.1-1

Design and Performance
Characteristics of Power Conversion System[a]

Turbine Data	
Manufacturer	Westinghouse
HPT building block	BB 296
LPT building block	BB 281R
LPT type/LSB length (in.)	TC6F/47
Number of casings	1-HP, 3-LP
Backpressure zones (in. Hg abs)	1.89/2.36/2.99 (2.4 average)
Generator	
Rating (kVA)	1,230,000
Gross output (MWe)	1230
Power factor	0.975
Voltage (volts)	25,000
Phase/frequency (Hz)	3/60
Hydrogen pressure (psig)	75-78
Steam conditions at throttle valve	
Flow (lb/hr)	14,412,027
Pressure (psia)	999
Temperature (°F)	544.5
Enthalpy (Btu/lb)	1191
Moisture content, maximum (%)	0.30
Turbine cycle heat rate (Btu/kW-hr)	9605
Final feedwater temperature (°F)	422.5
Turbine cycle arrangement	
Steam reheat stages	2
Number of feedwater heating stages	6
Feedwater heater in condenser neck	First stage
Type of condensate demineralizer	Powdered resin
Main steam bypass capacity (%)	23.6

[a] All data based on 100% load. See Figure 10.1-1.

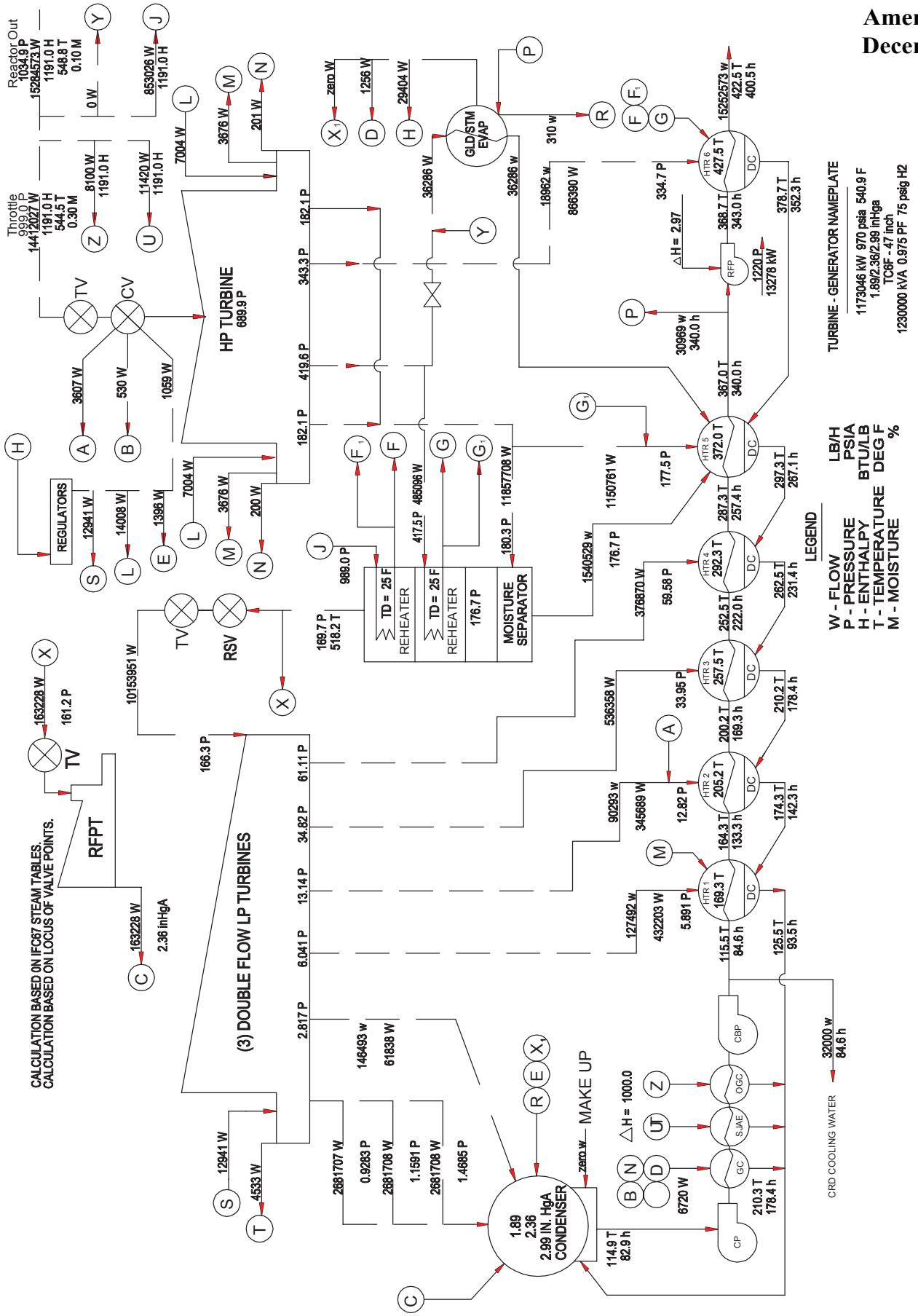

Columbia Generating Station
Final Safety Analysis Report

1259001 kW Net Load Heat Balance

Draw. No. 960222.24	Rev. 1	Figure 10.1-1

DELETED

Columbia Generating Station Final Safety Analysis Report	1292191 kW Net Load Heat Balance		
	Draw. No. 960222.25	Rev.	Figure 10.1-2

10.2 TURBINE GENERATOR

10.2.1 DESIGN BASIS

The turbine generator is designed to receive steam from the boiling water reactor, convert a portion of the thermal energy contained in the steam to electric energy, and provide extraction steam for feedwater heating.

The turbine generator, associated systems, and control characteristics, are integrated with the features of the reactor and associated systems to obtain an efficient and safe power generator unit. The turbine generator is designed to function only during normal plant conditions including startup, power generation, and shutdown. The turbine generator is not required for safe shutdown of the reactor nor to perform safety functions. The turbine generator equipment is in strict conformance with the latest edition in effect at the time of fabrication, of ANSI C.50.10, ANSI C.50.13, and the IEEE standards. The major portion of the manufacture was performed during 1975. The original LP turbine rotors were replaced with fully integral rotors during 1992. Safety class and seismic category are presented in Section 3.2.

The turbine generator design conditions are included in Table 10.1-1.

The turbine generator is intended for base load operation. Normal load swings are limited to the rate of change of power output of the nuclear steam supply system.

The turbine governor valves are capable of full stroke opening and closure within 7 sec for adequate pressure control performance. Normal governor valve closure is shown in Figure 10.2-1.

During events resulting in turbine throttle or governor valve fast closure, turbine inlet steam flow is not reduced faster than permitted by Figures 10.2-2 or 10.2-3.

10.2.2 SYSTEM DESCRIPTION

The main turbine is a tandem-compound unit, consisting of one double-flow high pressure turbine and three double-flow low pressure turbines (Figure 10.3-1), running at 1800 rpm with 47 in. last-stage blades. Exhaust steam from the high pressure turbine passes through two moisture separator/reheaters (two stage reheat) before entering the low pressure turbine inlets. The exhaust steam from the three low pressure turbines is condensed in the main condenser.

The generator is a three phase, 60 cycle, 25,000 V, 1800 rpm unit rated at 1,230,000 kVA at 0.975 power factor. The stator is water cooled and the rotor is hydrogen cooled. The hydrogen system is designed to minimize the hazard from fires or explosions as discussed in Appendix F.

The design of the system, Figures 10.2-4 and 10.2-5, and the specified operating procedures are such that explosive mixtures are not possible under normal operating conditions. The hydrogen gas supply system includes a storage trailer and storage cylinders used as backup if the trailer supply runs low. Pressure regulators are mounted on both the storage trailer and the bottle manifold for control of the hydrogen gas, and a circuit for supplying and controlling the carbon dioxide used in purging the generator during filling and degasing operations. To prevent hydrogen leakage by the generator shaft seals, a hydrogen seal oil system is provided. The hydrogen seal oil system, which includes pumps and controls, deaerates the oil before it is sent to the shaft seals.

The fundamental rule is that hydrogen and air should never be mixed. Carbon dioxide is used as an intermediate gas when changing either from air to hydrogen or from hydrogen to air. When changing from one gas to another, the generator is vented to the atmosphere. The valves, pressure gauges, regulators, and other equipment in the hydrogen gas supply system permit introducing hydrogen or prevent the flow of hydrogen into the generator and also provide means of controlling the gas pressure within the generator.

Steam is transported from the reactor by four main steam lines and flows through the turbine throttle valves and governor valves to the high pressure turbine. The steam lines are combined upstream of the throttle and governor valves. The turbine bypass valves are located upstream of the turbine throttle valves to permit steam bypass to the main condenser during transient conditions.

Two branch lines from the main steam heater supply steam to the two second-stage reheaters per moisture separator. The steam for the two first-stage reheaters per moisture separator is supplied by extraction lines from the high pressure turbine (see Figure 10.3-1). Moisture preseparator units remove moisture from the lower high-pressure turbine discharge exhaust steam as it exits the turbine. The moisture separator/reheaters remove the moisture from the high-pressure turbine exhaust steam and superheat the steam prior to admission to the low pressure turbines, thereby improving overall cycle efficiency. Extraction steam from the high pressure turbine is used in the first-stage reheater and for feedwater heating in heaters No. 5 and 6. Extraction steam from the low pressure turbines is used for the first, second, third, and fourth stage feedwater heaters. Moisture separator/reheater relief valves are provided to prevent overpressurizing the moisture separator/reheaters and the crossover lines in the event of crossover throttle or intercept valve closure; these relief valves discharge to the main condenser.

The turbine generator is equipped with a digital electrohydraulic (DEH) control system. See Section 7.7.1.5 for a detailed description of the turbine control system.

There are four methods of turbine overspeed control protection:

a. Digital Electro-Hydraulic (DEH) speed control,
b. Overspeed protection controller (OPC),
c. Digital control overspeed trip, and
d. Digital trip overspeed trip.

DEH Speed Control

The DEH speed control is designed to maintain turbine speed within 2-3 rpm of setpoint during startup; after the turbine generator has been synchronized to the grid, the grid frequency controls turbine speed. The DEH control system monitors turbine speed via three speed sensors. Upon detecting a separation from the grid and a resulting overspeed condition, the DEH speed control will rapidly close the governor valves via their servo-valves preventing an excessive overspeed condition from occurring.

Overspeed Protection Controller

The OPC primary function is to avoid excessive turbine overspeed such that a turbine trip is avoided. At 103% of rated speed, the OPC solenoids open, rapidly closing the governor and intercept valves to arrest the overspeed before it reaches the trip setting. When turbine speed falls below 101%, turbine speed control is returned to the DEH speed control mode.

Digital Control Overspeed Trip, Digital Trip Overspeed Trip and Quadvoter Hydraulic Trip Block

If the turbine accelerates further than 103% of rated speed, the digital control overspeed trip logic in the DEH control system will provide a trip signal that causes the quadvoter hydraulic trip block to de-energize and trip the turbine. Additionally, the digital trip overspeed trip has three redundant speed sensors and will initiate an independent trip of the quadvoter hydraulic trip block. Both the digital control overspeed trip and the digital trip overspeed trip use two out of three overspeed logic to initiate the trip signal prior to reaching 111% of rated speed. These signals cause the output module for the quadvoter to simultaneously de-energize, or trip, all of the quadvoter valves.

Redundant power supplies are auctioneered to assure loss of one power supply does not cause the quadvoter to trip. The quadvoter provides two channels, each with two solenoid valves in series, to depressurize the trip header and trip all the throttle, governor, intercept and reheat stop valves. The quadvoter design assures that a single failure of a quadvoter valve will neither cause the turbine to trip nor prevent the turbine from tripping if required. The DEH control system is designed to maintain the turbine speed below 120% of rated speed.

The quadvoter trip block assembly is a fail-safe design. Therefore a loss of all power or a loss of all signals to the quadvoter solenoids would cause a turbine trip as all of the quadvoter solenoid valves would de-energize. The turbine overspeed control equipment and electrical wiring may be destroyed by a postulated piping failure; however, this loss would result in a turbine trip based on the fail-safe design. A missile may destroy the electromagnetic speed pickups and associated electrical wiring, but the turbine will still trip on loss of all speed probe signals. Missile damage to the hydraulic lines for the trip block assembly would result in a loss of high pressure fluid thereby depressurizing the trip header and causing a turbine trip.

The operation of the DEH control system is continuously monitored during turbine generator operation. Detection of turbine speed variation is accomplished by the speed-control unit discussed in Section 7.7.1.5. The overspeed protection controller and two digital overspeed trips are tested during reactor startup from refueling outages. The turbine throttle, governor, interceptor, reheat stop valves and quadvoter solenoid valves are periodically tested during operation. Turbine throttle, governor, interceptor and reheat stop valves are periodically inspected. The manner and frequency of the inspection and testing will take into consideration the manufacturer's and others' recommendations and missile probability analysis (see Section 3.5.1.3) in conjunction with the plant generating requirements.

Instrumentation for the turbine generator is provided in the control room and is described in Section 7.7.1.5.

The turbine is equipped for normal operations with a shaft-driven lubricating oil pump and ac motor-driven lubricating oil pump for startup, shutdown, and turning gear, or for emergencies whenever oil pressure falls below set pressure. The turbine is also provided with a dc motor-driven lubricating oil pump with power supplied from storage batteries for emergency operation.

The turbine shaft is supplied with "clean" (essentially nonradioactive) sealing steam which prevents outleakage of steam from the high-pressure turbine and inleakage of air to the low pressure turbines. An evaporator generates essentially nonradioactive steam for turbine gland sealing (see Section 10.4.3).

Overpressure protection of the turbine exhaust hoods and the main condenser shell is provided by rupture diaphragms on the exhaust hoods.

The turbine incorporates protective devices including the exhaust hood relief diaphragms, exhaust hood temperature alarm, pilot dump valve for closing the extraction steam nonreturn valves, low vacuum alarm, thrust bearing wear alarm, and low bearing oil pressure alarm.

In addition, the following tabulation is a list of the turbine generator protective trips:

Mechanical Faults	Electrical Faults
Low vacuum	Generator power differential
Thrust bearing wear	Generator underfrequency
Low oil pressure	Generator differential current
Overspeed	Generator stator ground
Manual	Generator loss of excitation
Anti-motoring	Generator negative sequence
Low DEH pressure	Generator overcurrent during starting
Low EH (electrohydraulic) fluid level	Generator stator ground during starting
Reactor high water level	Generator overexcitation
RCIC-V-13 and 45 open	Generator/transformer overall differential
Moisture separator reheater shell side high level	Manual
Loss of DEH control power	Unit lockout
Both Throttle Valves on a steam chest closed	Unit overall lockout

The main steam throttle and governor valves are located in the steam chest assembly which is parallel to the axis of the high pressure turbine. The nominal closure time for a fully open throttle or governor valve is 0.15 sec. A failure of one governor valve causes the other valves to increase or decrease their opening to compensate for that valve. If one valve fails open at low load condition, the other valves close. If the closing of the other valves is not enough to compensate for that valve, the turbine load increases proportional to steam flow.

The reheat stop and intercept valves are in-line valves located in the crossover piping between the moisture separator/reheater and low pressure turbine. The closure time upon depressionization of the trip header for a fully open valve is 0.15 sec.

The valves described above are periodically tested as required by the Licensee Controlled Specifications (LCS) by using the DEH control system during power operation. Pressure variations caused by closing a governor valve cause the other governor valves to open. Therefore, testing must be done at a reduced power level to provide sufficient margin for pressure control. Details of the pressure control system are discussed in Section 7.7.1.5. In addition, one of each valve will have its internals periodically inspected as required by the LCS.

Each of the extraction steam lines has a reverse current valve and a gate valve, with the exception of the extraction lines to low pressure number 1 heaters. These valves are located near the condenser. On turbine trip the reverse current valves close immediately on reverse flow. Because of the fast closure and the short distance between these valves and the extraction points at the turbine, the amount of steam in these lines does not affect the turbine coastdown following a turbine trip.

10.2.3 TURBINE DISK INTEGRITY

Analysis of potential turbine missile hazards and drawings showing the orientation of the turbine with respect to important structures are presented in Section 3.5.1.3.

10.2.4 SAFETY EVALUATION

The steam entering the high pressure turbine may contain fission, coolant activation, and activated corrosion products. The anticipated concentration of nitrogen-16, which is the dominant radionuclide entering the high pressure turbine, is discussed in Section 12.2. Moisture separation and transit time between the high pressure and low pressure turbines reduces the concentration of radionuclides in the steam prior to entering the low pressure turbine. Most of the gaseous radioactivity is removed by the steam-jet air ejector and routed to the offgas system (see Section 11.3). The condensate in the condenser hotwell contains significantly less radioactive material than the inlet steam.

Access to the turbine area is controlled. Radiation levels associated with turbine components are described in Section 12.2 and shielding requirements are discussed in Section 12.3.

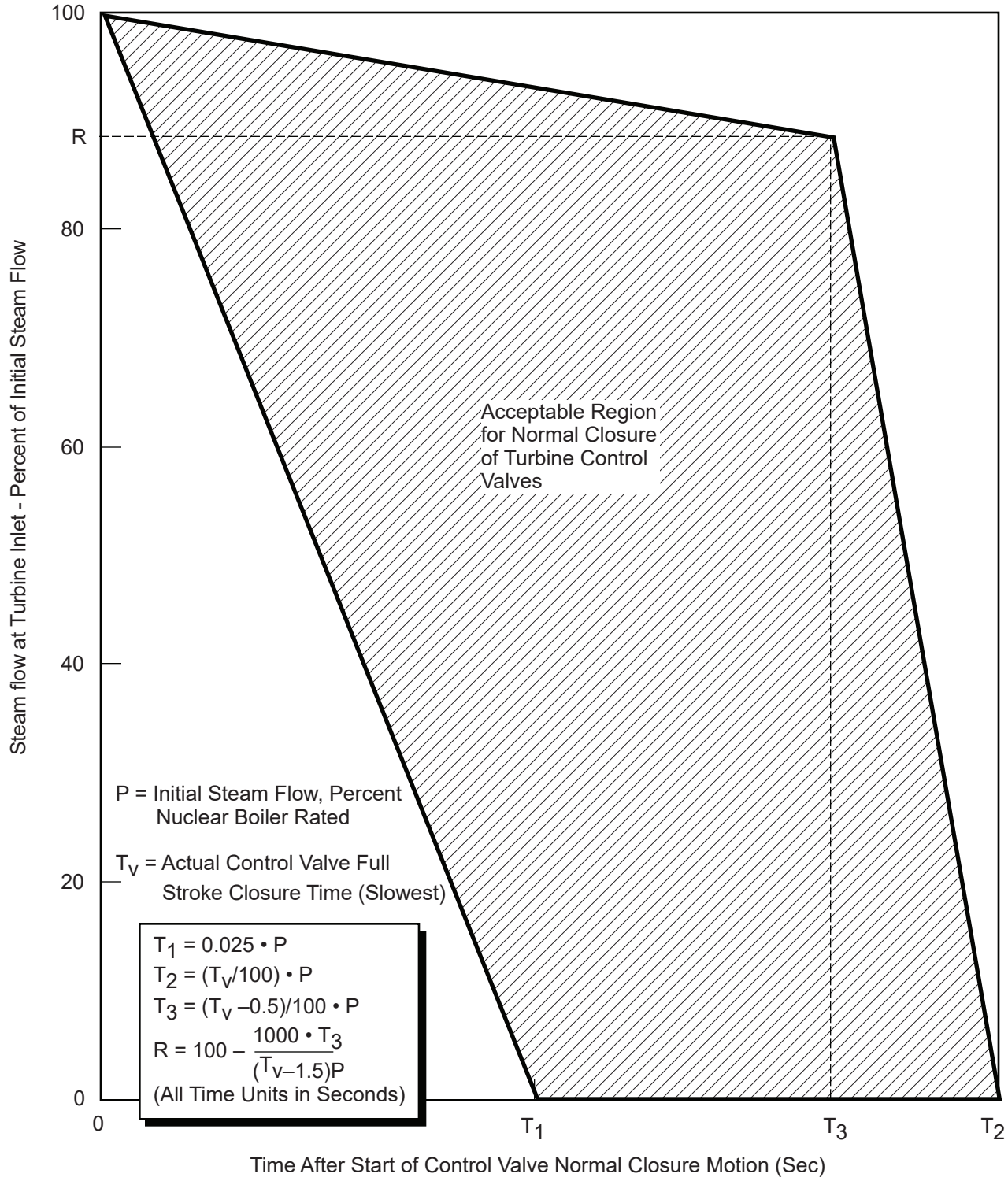

Columbia Generating Station Final Safety Analysis Report	**Acceptable Range for Control Valve Normal Closure Motion**		
	Draw. No. **950021.39**	Rev.	Figure **10.2-1**

Form No. 960690

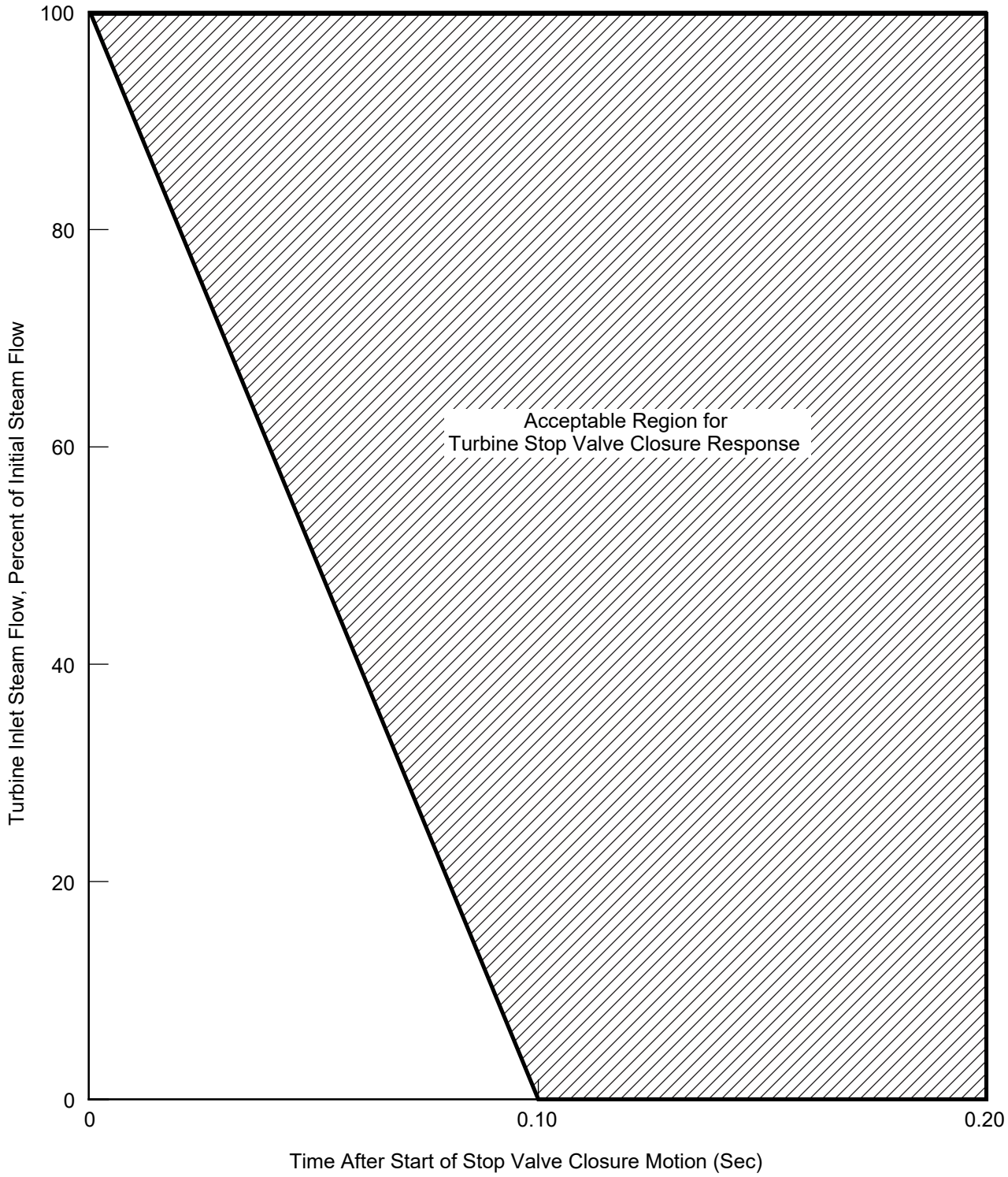

Columbia Generating Station
Final Safety Analysis Report

Turbine Stop Valve Closure Characteristic

Draw. No. 950021.40	Rev.	Figure 10.2-2

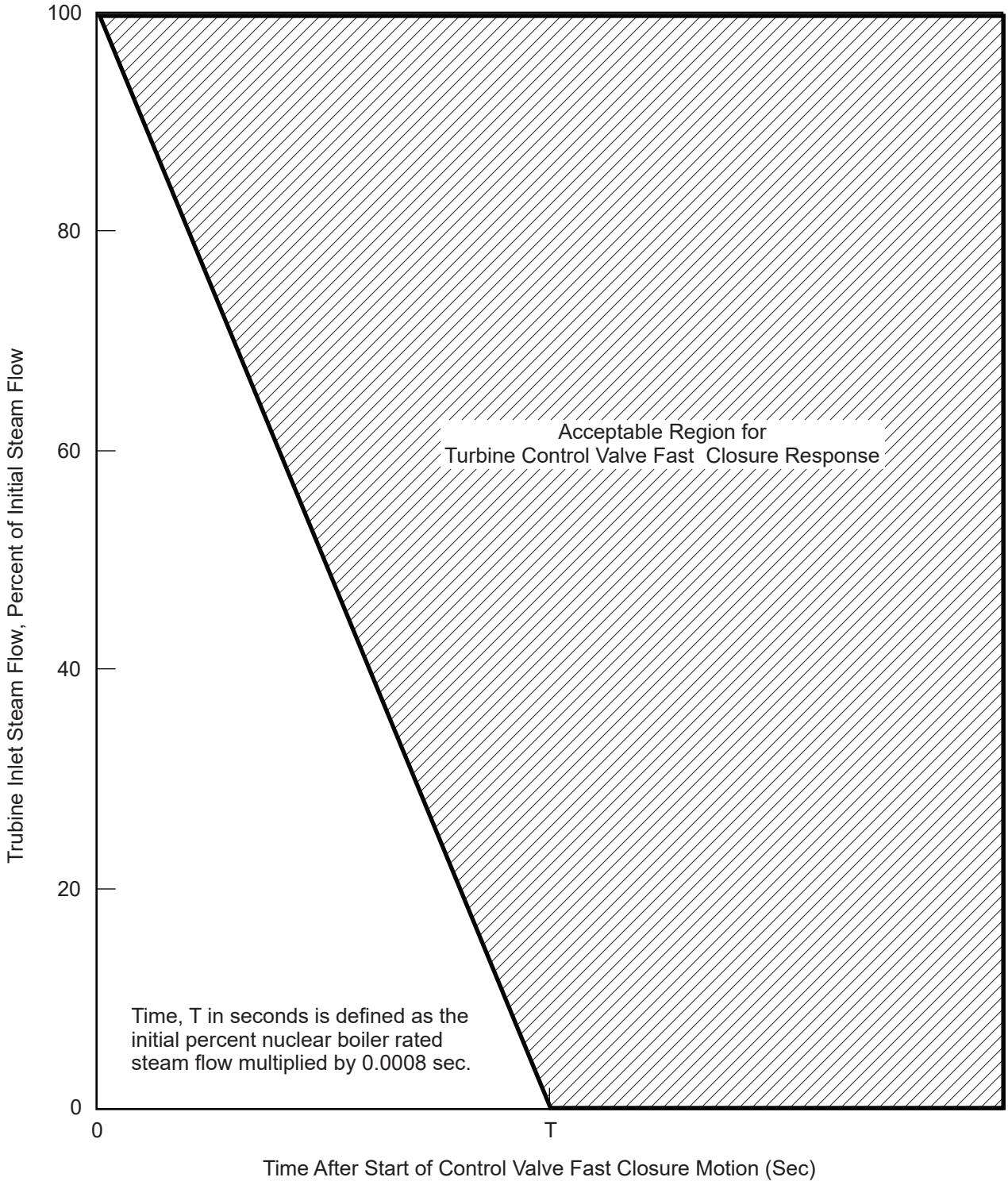

Columbia Generating Station
Final Safety Analysis Report

Turbine Control Valve Fast Closure Characteristic

Draw. No. 950021.41	Rev.	Figure 10.2-3

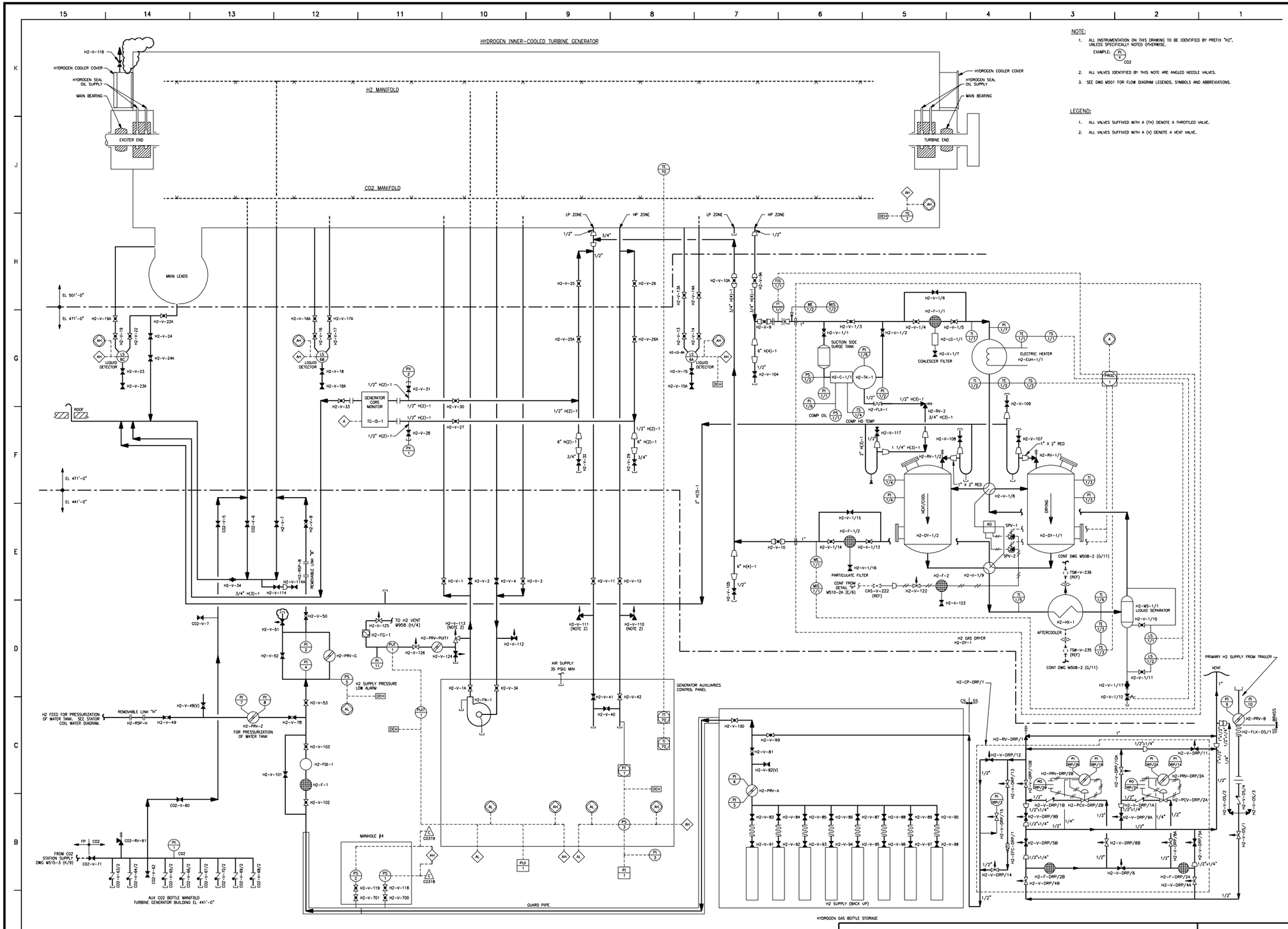

Columbia Generating Station
Final Safety Analysis Report

AC Turbine Generator Gas Diagram

Draw. No. M957	Rev. 29	Figure 10.2-4

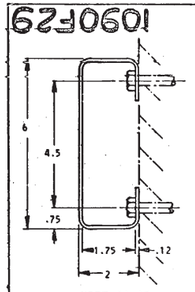

VIEW "A-A"

CO_2 CYLINDER CONNECTION
CGA-320

DETAIL Y

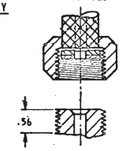

CO_2 BOTTLES ARE STANDARDIZED IN USA. CONNECTION SHOWN IS STANDARD. PURCHASER SHOULD CHECK HIS CO_2 SUPPLIER TO MAKE SURE CONNECTION SUPPLIED IS SATISFACTORY.

HYDROGEN CYLINDER CONNECTION
CGA-350

DETAIL X

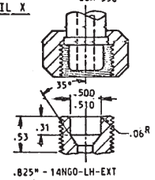

H_2 BOTTLES ARE STANDARDIZED IN USA. CONNECTION SHOWN IS STANDARD. PURCHASER SHOULD CHECK HIS H_2 SUPPLIER TO MAKE SURE CONNECTION SUPPLIED IS SATISFACTORY.

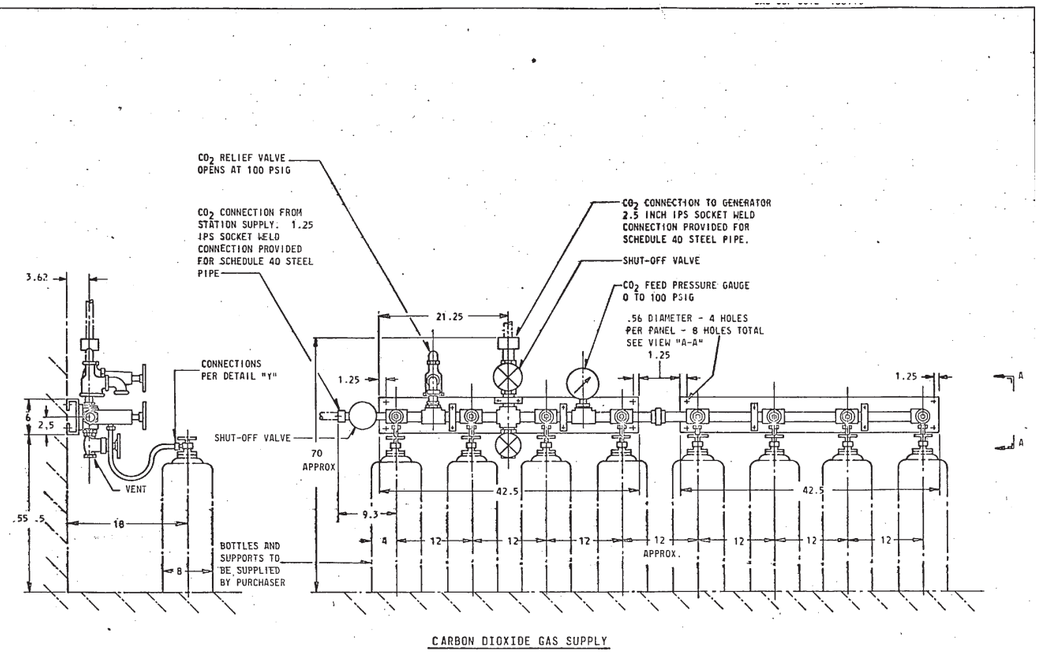

CARBON DIOXIDE GAS SUPPLY

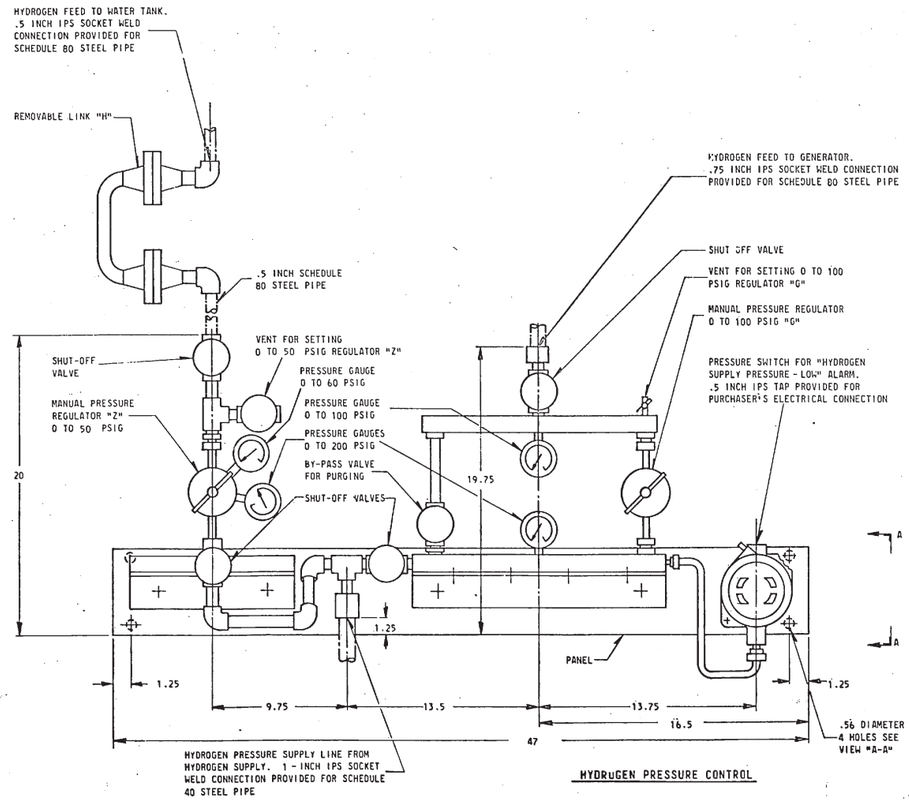

HYDRUGEN PRESSURE CONTROL

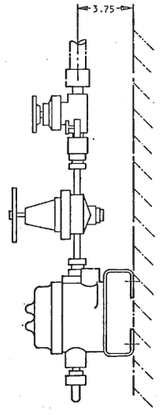

SCANNED

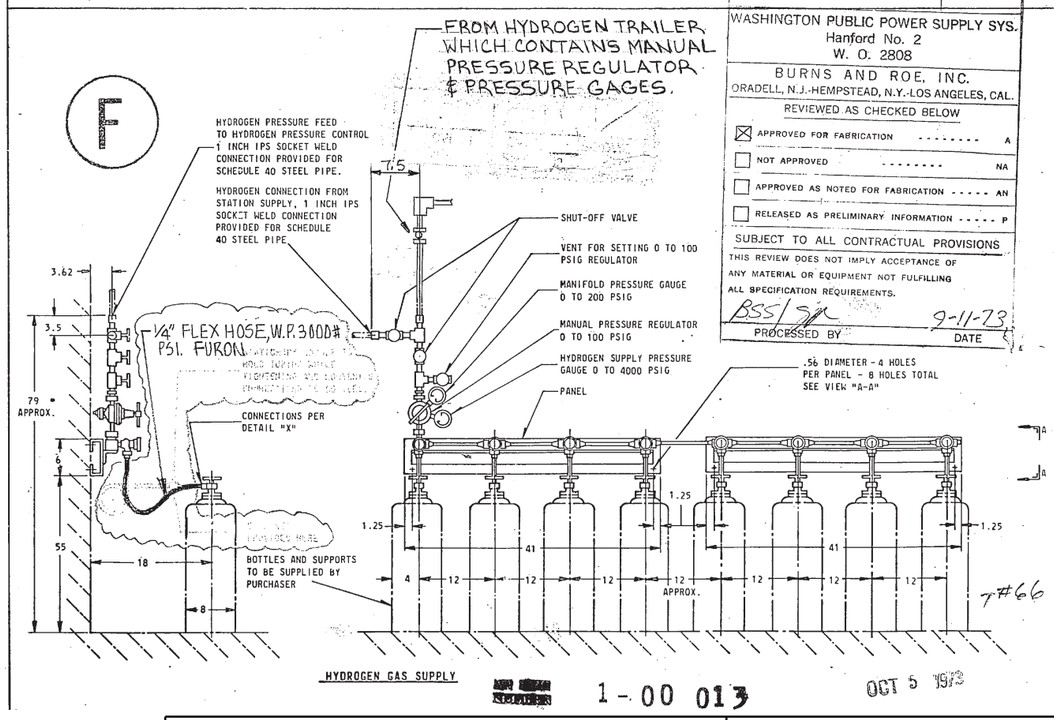

HYDROGEN GAS SUPPLY

CONTRACT

WASHINGTON PUBLIC POWER SUPPLY SYS.
Hanford No. 2
W. O. 2808

BURNS AND ROE, INC.
ORADELL, N.J.-HEMPSTEAD, N.Y.-LOS ANGELES, CAL.

REVIEWED AS CHECKED BELOW

- [x] APPROVED FOR FABRICATION ..... A
- [ ] NOT APPROVED ..... NA
- [ ] APPROVED AS NOTED FOR FABRICATION ..... AN
- [ ] RELEASED AS PRELIMINARY INFORMATION ..... P

SUBJECT TO ALL CONTRACTUAL PROVISIONS

THIS REVIEW DOES NOT IMPLY ACCEPTANCE OF ANY MATERIAL OR EQUIPMENT NOT FULFILLING ALL SPECIFICATION REQUIREMENTS.

BSS/JAC 9-11-73
PROCESSED BY DATE

7#66

1-00 013

OCT 5 1973

Columbia Generating Station
Final Safety Analysis Report

AC Turbine Generator Gas Supply Outline

Draw. No. 01-00,60 | Rev. 4 | Figure 10.2-5

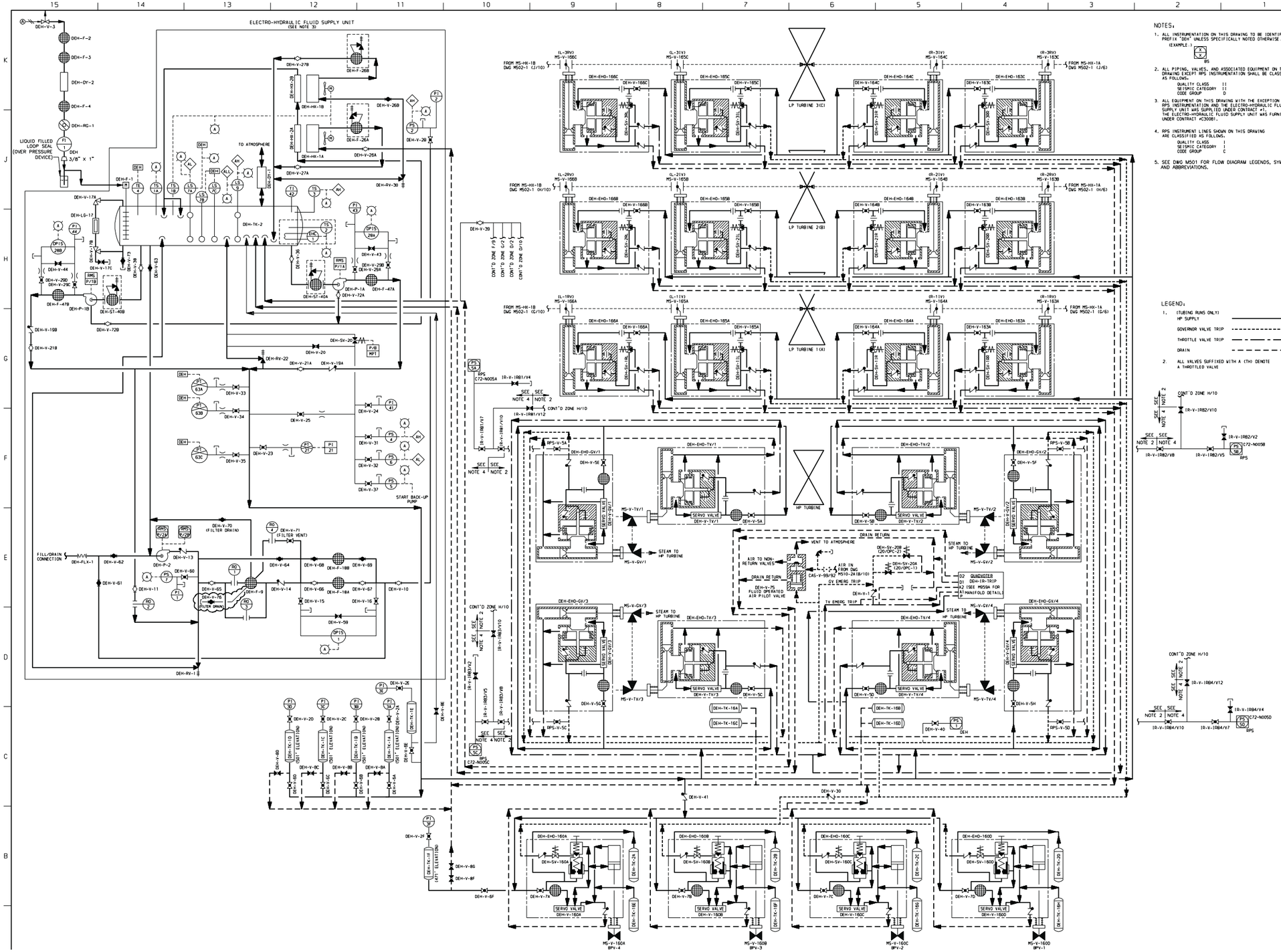

Columbia Generating Station Final Safety Analysis Report	**Electrohydraulic HP Fluid and Lube Oil Diagram**		
	Draw. No. M959	Rev. 19	Figure 10.2–6.1

NOTES:

1. ALL COMPUTER POINTS ARE BY POINT ID (TAG OR SIGNAL NUMBERS).
2. THIS DRAWING REDRAWN FROM (M) DRAWING 725J476 (CVI 01-00,82).
3. VALVE TG-V-128 IS A SIX-WAY TRANSFER VALVE SUPPLIED BY VENDOR (SEE O & M MANUAL 01-00,113,2 HEAT TRANSFER SECTION TAB 2).
4. ABANDONED IN PLACE THRUST BEARING POSITION DISK SENSING LINE.
5. SEE DWG M501 FOR FLOW DIAGRAM LEGENDS, SYMBOLS AND ABBREVIATION.

LEGEND:

ALL VALVES SUFFIXED WITH A (TH) DENOTE A THROTTLED VALVE.

BEARING LIFT OIL

AUTOSTOP OIL

GUARD PIPE, OIL RETURN

TURBINE DRIVE

PUMP

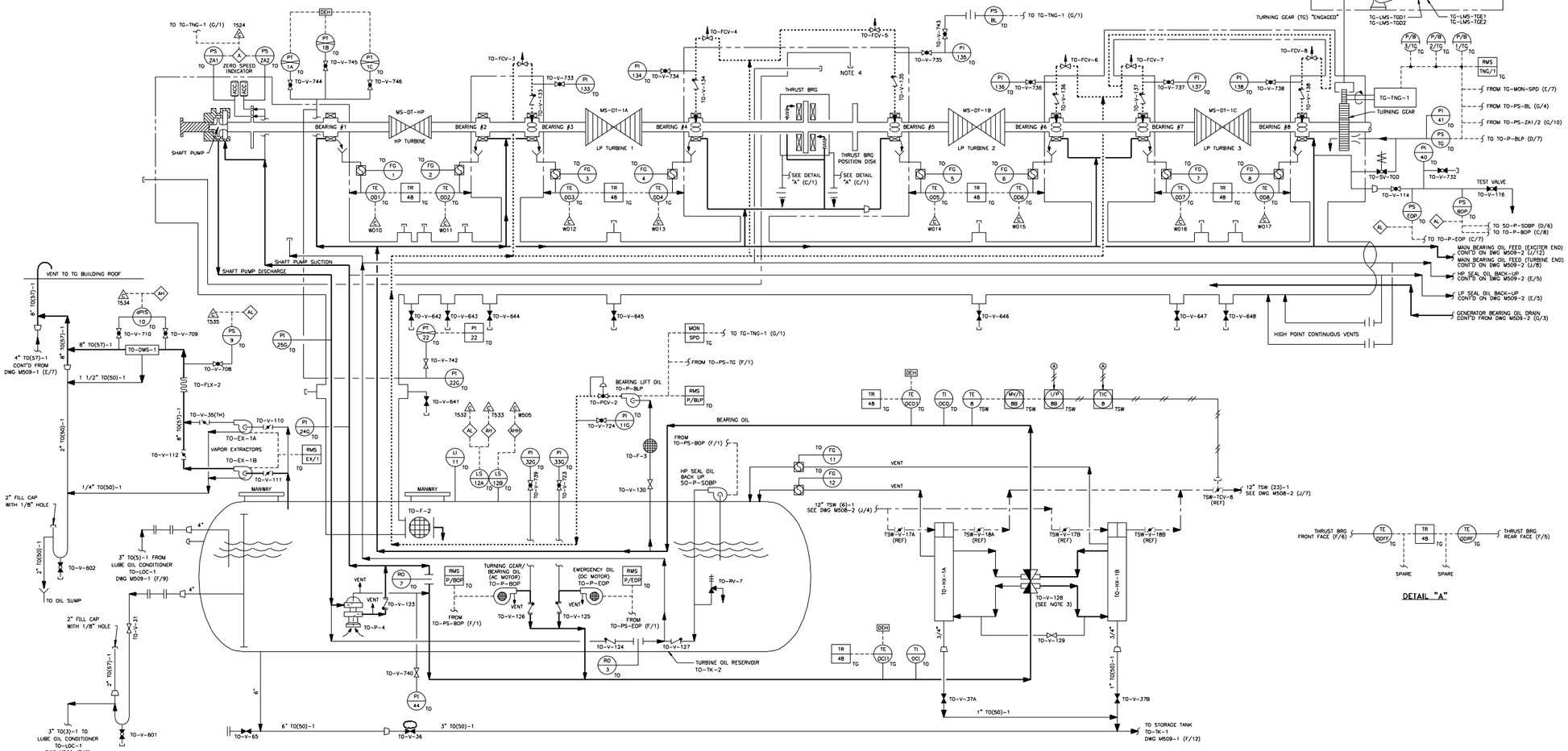
TURNING GEAR CONTROL
AIR IN
TO-SV-TGE
TO-SV-TGD
TO-SV-TGV
ENGAGE DIRECTION
TG-LMS-TGT
SPRING
TURNING GEAR (TG) "ENGAGED"
TG-LMS-TGD1
TG-LMS-TGD2
TG-LMS-TGE1
TG-LMS-TGE2
TO TG-TNG-1 (G/1)
ZERO SPEED INDICATOR
TO-V-744
TO-V-745
TO-V-746
TO-FCV-3
TO-FCV-4
TO-FCV-5
TO-FCV-6
TO-FCV-7
TO-FCV-8
TO-V-733
TO-V-734
TO-V-735
TO-V-736
TO-V-737
TO-V-738
NOTE 4
THRUST BRG
MS-DT-HP
MS-DT-1A
MS-DT-1B
MS-DT-1C
HP TURBINE
LP TURBINE 1
LP TURBINE 2
LP TURBINE 3
BEARING #1
BEARING #2
BEARING #3
BEARING #4
BEARING #5
BEARING #6
BEARING #7
BEARING #8
SHAFT PUMP
THRUST BRG POSITION DISK
SEE DETAIL "A" (C/1)
TG-TNG-1
TURNING GEAR
RMS TNG/1
FROM TO-MON-SPD (E/7)
FROM TO-PS-BL (G/4)
FROM TO-PS-ZA1/2 (G/10)
TO TO-P-BLP (D/7)
TO-SV-TGO
TO-V-114
TO-V-732
TEST VALVE TO-V-116
TO SO-P-SOBP (D/6)
TO TO-P-BOP (C/8)
TO TO-P-EOP (C/7)
MAIN BEARING OIL FEED (EXCITER END) CONT'D ON DWG M509-2 (J/12)
MAIN BEARING OIL FEED (TURBINE END) CONT'D ON DWG M509-2 (J/8)
HP SEAL OIL BACK-UP CONT'D ON DWG M509-2 (E/5)
LP SEAL OIL BACK-UP CONT'D ON DWG M509-2 (E/5)
GENERATOR BEARING OIL DRAIN CONT'D FROM DWG M509-2 (C/3)
HIGH POINT CONTINUOUS VENTS
VENT TO TG BUILDING ROOF
4" TO(57)-1 CONT'D FROM DWG M509-1 (E/7)
8" TO(57)-1
TO-DMS-1
TO-V-708
TO-V-709
TO-V-710
1 1/2" TO(50)-1
TO-FLX-2
TO-V-35(TH)
TO-V-110
TO-EX-1A
VAPOR EXTRACTORS
TO-EX-1B
TO-V-111
TO-V-112
RMS EX/1
1/4" TO(50)-1
2" FILL CAP WITH 1/8" HOLE
MANWAY
TO-F-2
2" TO(50)-1
TO-V-602
TO OIL SUMP
3" TO(5)-1 FROM LUBE OIL CONDITIONER TO-LOC-1 DWG M509-1 (F/9)
4"
2" FILL CAP WITH 1/8" HOLE
TO-V-131
2" TO(57)-1
3" TO(3)-1 TO LUBE OIL CONDITIONER TO-LOC-1 DWG M509 (F/6)
TO-V-601
SHAFT PUMP SUCTION
SHAFT PUMP DISCHARGE
TO-V-642
TO-V-643
TO-V-644
TO-V-645
TO-V-646
TO-V-647
TO-V-648
TO-V-742
TO-V-641
TO-PCV-2
BEARING LIFT OIL TO-P-BLP
TO-V-724
TO-F-3
TO-V-130
FROM TO-PS-TG (F/1)
FROM TO-PS-BOP (F/1)
BEARING OIL
HP SEAL OIL BACK UP SO-P-SOBP
TO-V-739
TO-V-733
TO-V-743
TO-V-134
TO-V-135
TO-V-136
TO-V-137
TO-V-138
TO-V-139
TO-V-140
TO-V-141
TO-V-142
TO-V-143
TO-V-144
TO-V-145
TO-V-146
TO-V-147
TO-V-148
TO-V-149
TO-V-150
TO-V-151
TO-V-152
TO-V-153
TO-V-154
TO-V-155
TO-V-156
TO-V-157
TO-V-158
TO-V-159
TO-V-160
TO-V-161
TO-V-162
TO-V-163
TO-V-164
TO-V-165
TO-V-166
TO-V-167
TO-V-168
TO-V-169
TO-V-170
TO-V-171
TO-V-172
TO-V-173

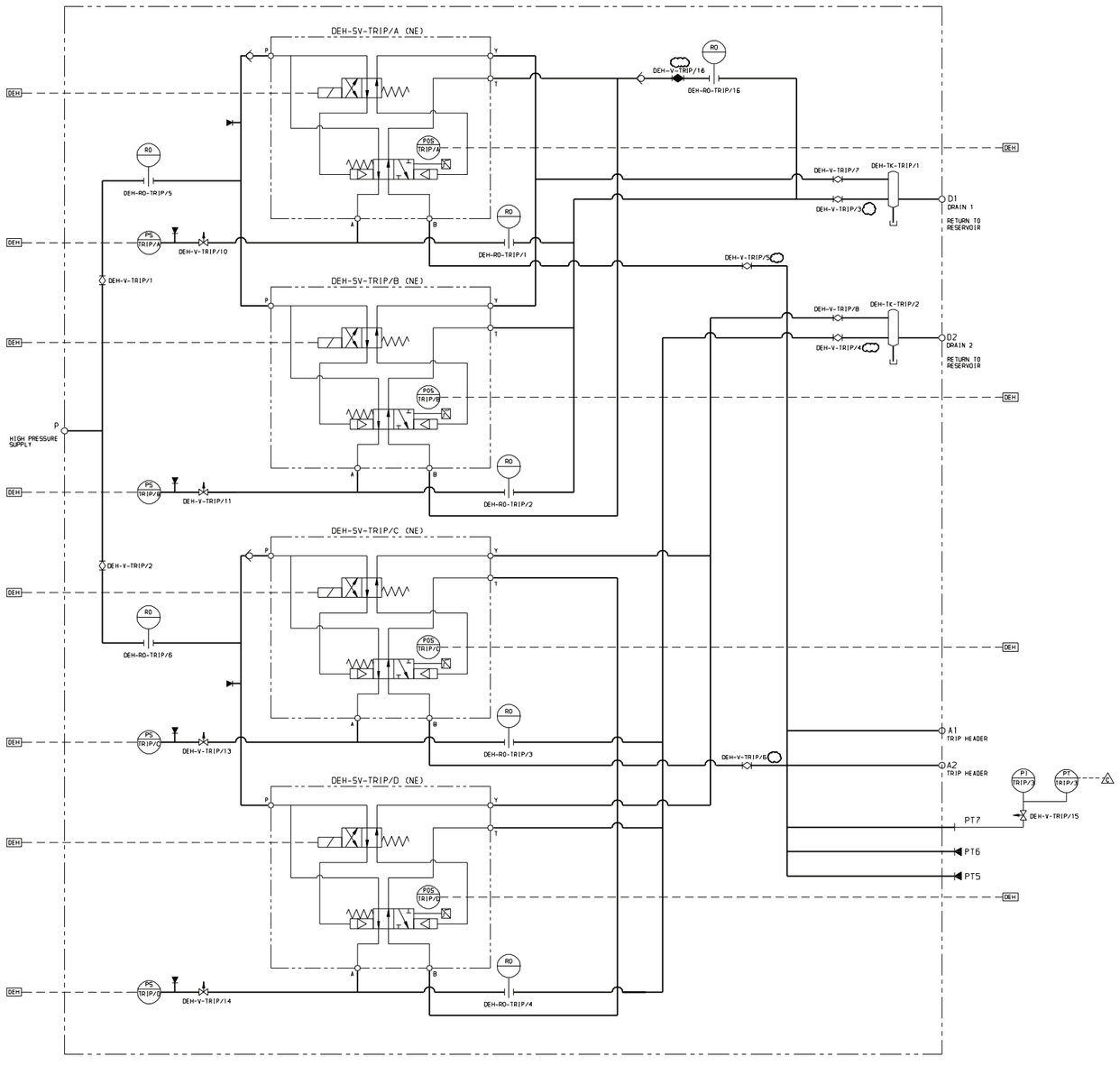

DEH-IR-TRIP
QUADVOTER MANIFOLD DETAIL
SEE M959 (ZONE E/4)

NOTES:

1. ALL INSTRUMENTATION ON THIS DRAWING TO BE IDENTIFIED BY PREFIX "DEH" UNLESS SPECIFICALLY NOTED OTHERWISE.
   (EXAMPLE.)
   X / Y — BS
2. ALL PIPING, VALVES, AND ASSOCIATED EQUIPMENT ON THIS DRAWING SHALL BE CLASSIFIED AS FOLLOWS:
   QUALITY CLASS II
   SEISMIC CATEGORY II
   CODE GROUP D
3. SEE DWG M501 FOR FLOW DIAGRAM LEGENDS, SYMBOLS AND ABBREVIATIONS.

REFERENCE DRAWINGS

CVI 1095-00.18.1 – QUADVOTER TRIP SYSTEM OUTLINE HYDRAULIC OUTLINE

Columbia Generating Station Final Safety Analysis Report	**Electrohydraulic HP Fluid and Lube Oil Diagram**	
	Draw. No. M959A	Rev. 4 / Figure 10.2-6.3

Amendment 59
December 2007

NOTES:
1. FOR SYMBOL LIST SEE DW

SYMBOL LIST

PRESSURE SWITCHES

63/BL	-BEARING LIFT OIL-OPENS AT 850 PSIG DECR. PRESS.-LOCATED IN TERM. BOX "TB"
DEH-PS-5	-EH FLUID BACKUP PUMP START-CLOSES ON DECREASING PRESSURE 1800 PSIG
63/TG-1	-TURNING GEAR-OPENS AT INCREASE OF "ENGAGE AIR" PRESS. TO 20 PSIG
63/BOP	-BEARING OIL-CLOSES ON DECREASING PRESS AT 11-12 PSIG.-LOCATED IN TERM. BOX "L"
63/EOP	-BEARING OIL-CLOSES ON DECREASING PRESS. AT 10-11 PSIG.-LOCATED IN TERM. BOX "L"
63/XO	-EXHAUST HOOD SPRAY-OPENS ON PRESS. INCREASE AT 9 PSIG (EQUAL TO 15% LOAD)
DEH-PS-2	-EH FLUID RETURN-CLOSES ON INCREASING PRESS. AT 30 PSIG
DEH-DPIS-28A	-EH FLUID PUMP #1 FILTER DIFF. PRESS. SW. CLOSES ~50 PSID
DEH-DPIS-28B	-EH FLUID PUMP #2 FILTER DIFF. PRESS. SW. CLOSES ~50 PSID
SW-10	-DIFF. PRESS. SW. CLOSES ON LOW AIR SIDE SEAL OIL PUMP PRESSURE
SCW-DPS-15(SW-15)	-DIFF. PRESS. SW. OPERATES WHEN DIFF. PRESS. <60 PSI ON PUMP SCW-P-1
SCW-DPS-16(SW-16)	-DIFF. PRESS. SW. OPERATES WHEN DIFF. PRESS. <60 PSI ON PUMP SCW-P-2
63/EHS-1	-EXHAUST HOOD SPRAY-CLOSES ON DECREASING PRESSURE
63/EHS-2	-EXHAUST HOOD SPRAY-CLOSES ON DECREASING PRESSURE
63/EHS-3	-EXHAUST HOOD SPRAY-CLOSES ON DECREASING PRESSURE
DEH-PS-6	-EH FLUID PRESS. LOW-OPENS ON DECREASE PRESS. 1900 PSIG
DEH-PS-4	-EH FLUID PRESS HI-CLOSES ON INCREASE PRESS. 2420 PSIG
SW-9	-DIFF. PRESS. SW. CLOSES WHEN AIR SIDE SEAL OIL PUMP IS OFF
SW-12	-PRESS SW. CLOSES WHEN SEAL OIL TURBINE BACK-UP PRESS LO.
SW-13	-DIFF. PRESS. SW. CLOSES WHEN H2 SIDE SEAL OIL PUMP OFF
SW-14	-DIFF. PRESS. SW. CLOSES WHEN AIR SIDE SEAL OIL BACK-UP PUMP RUNNING
SW-17	-DIFF. PRESS. SW. CLOSES WHEN COOLING WATER FILTER CLOGGED
SW-18	-PRESS. SW. CLOSES WHEN MAKE-UP WATER FLOW IS ON
SW-23	-PRESS. SW. CLOSES WHEN STATOR COIL COOLING WATER TANK PRESS. IS HI
SW-24	-DIFF. PRESS. SW. CLOSES WHEN STATOR COIL COOLING WATER FLOW IS LO
SW-25	-DIFF. PRESS SW. CLOSES WHEN STATOR COIL COOLING WATER FLOW IS LO-LO
SW-30	-DIFF. PRESS. SW. CLOSES WHEN GEN. H2/H2O DIFF PRESS. LO
63/RPS	-RPS PRESS. SWS. OPENS ON DECREASE OF PRESS.

LIMIT SWITCHES (33)

(FOR DEVELOPMENT SEE E520-2A, EXCEPT AS NOTED)

33/TGD-1	-TURNING GEAR LEVER POSITION SWITCH WIRED TO TERMINAL BOX "x"
33/TGD-2	-TURNING GEAR LEVER POSITION SWITCH WIRED TO TERMINAL BOX "x"
33/TGE-1	-TURNING GEAR LEVER POSITION SWITCH WIRED TO TERMINAL BOX "x"
33/TGE-2	-TURNING GEAR LEVER POSITION SWITCH WIRED TO TERMINAL BOX "x"
33/TGT-1	-TURNING GEAR LEVER POSITION SWITCH WIRED TO TERMINAL BOX "x"
33/RO	-RELATCH OPERATOR-WIRED TO TERM. BOX "x"
33/VTL	-VACUUM TRIP LATCH-WIRED TO TERM. BOX "x"
33/DV	-DRAIN VALVE LIMIT SW.
33/RR	-REHEAT STOP V RIGHT LIMIT SW.
33/RL	-REHEAT STOP V LEFT LIMIT SW.
33/IR	-INTERCEPTOR V RIGHT LIMIT SW.
33/IL	-INTERCEPTOR V LEFT LIMIT SW.
33/RCV	-REHEAT CONTROL VALVE
33/EHS	-EXHAUST HOOD SPRAY
33/a & 33/b	-DISCONNECT SWITCH CONTACTS - 500kV
33/EHB-1	-SEE 33/COND-V-609A DWG. E519-5 -EXHAUST HOOD BY-PASS SPRAY VALVE LIMIT SW.
33/EHB-2	-SEE 33/COND-V-609B DWG. E519-5 -EXHAUST HOOD BY-PASS SPRAY VALVE LIMIT SW.
33/EHB-3	-SEE 33/COND-V-609C DWG. E519-5 -EXHAUST HOOD BY-PASS SPRAY VALVE LIMIT SW.
33/AR-V-3A	-(N) 33/VB1 -VACUUM BKR LIMIT SWITCH SEE DWG. E523 FOR SW. DEVELOPMENT
33/AR-V-3B	-(N) 33/VB2 -VACUUM BKR LIMIT SWITCH SEE DWG. E523 FOR SW. DEVELOPMENT
33/AR-V-3C	-(N) 33/VB3 -VACUUM BKR LIMIT SWITCH SEE DWG. E523 FOR SW. DEVELOPMENT
33/OS1	-ROTOR GLAND STEAM SPILL-OVER S.O. VALVE LIMIT SW. -SEE DWG. E523 FOR SW. DEVELOPMENT
33/OS2	-ROTOR GLAND STEAM SPILL-OVER B.P. VALVE LIMIT SW. -SEE DWG. E523 FOR SW. DEVELOPMENT
DEH-POS-TRIP/A,B,C,D	-TRIP SOLENOID POSITION

ELECTRICALLY OPERATED VALVES (20)

20-1/OPC	-SOL. V-OVERSPEED PROTECTION CONTROLLER WIRED TO TERM. BOX "B"
20-2/OPC	-SOL. V-OVERSPEED PROTECTION CONTROLLER WIRED TO TERM. BOX "B"
20/TGE	-SOL. V-TURNING GEAR ENGAGE -WIRED TO TERM. BOX "x"
20/TGV	-SOL. V-TURNING GEAR ENGAGE AIR VENT -WIRED TO TERM. BOX "x"
20/TGD	-SOL. V-TURNING GEAR DISENGAGE -WIRED TO TERM. BOX "x"
20/DVI	-SOL. VALVE ENERGIZED TO ADMIT AIR TO DRAIN VALVE OPERATOR
20/DVII	-SOL. VALVE ENERGIZED TO ADMIT AIR TO DRAIN VALVE OPERATOR
20/TGO	-TURNING GEAR LOW OIL
20/MPT	-SOL. V-ELECTRO HYDRAULIC PUMP NO'S 1 & 2 AUTO START TEST
20-EHS-1,2,3	-SOL. V TO OPEN EXHAUST HOOD SPRAY WHEN TURB. SPEED EXCEEDS 600RPM
20/RL	-SOL. V -REHEAT STOP V TEST, LEFT
20/RR	-SOL. V -REHEAT STOP V TEST, RIGHT
20/IL	-SOL. V -INTERCEPTOR V TEST, LEFT
20/IR	-SOL. V -INTERCEPTOR V TEST, RIGHT
20/BV1,2,3,4	-SOL. V -STEAM BY-PASS
20/RVB	-SOL. V -FOR TEST OF 63/RVB PRESS SWS.
20/RPS	-SOL. V -FOR TEST OF 63/RPS PRESS SWS.
DEH-SV-TRIP-A,B,C,D	-TRIP BLOCK

MISCELLANEOUS

63-1/ZA	-TURNING GEAR ZERO SPEED ALARM ACTUATING CONTACTS (APPROX. 10 SEC. TIME DELAY)-LOCATED IN TERM. BOX "A"
63-2/ZA	-TURNING GEAR ZERO SPEED ALARM ACTUATING CONTACTS (APPROX. 10 SEC. TIME DELAY)-LOCATED IN TERM. BOX "A"
52a & 52b	-500kV CIRCUIT BREAKER CONTACTS. (IN MICRO WAVE CAB.)
DEH-LS-7A,B,C	-LOW EH FLUID LEVEL LOCKOUT LEVEL SWITCH CLOSES ON LOW EH FLUID
TG-RLY-SPD ARM1/NC1	-TURNING GEAR ACTUATING CONTACT-CLOSED FROM ZERO TO 600RPM TURBINE SPEED-LOCATED IN TG-MON-SPD-BOARD "B" (RELAY NORMALLY DE-ENERGIZED)
TG-RLY-SPD ARM3/NC3	-CONTACT OPENS ON DECREASING TURBINE SPEED 600RPM-LOCATED IN TG-MON-SPD-BOARD "B" (RELAY NORMALLY ENERGIZED)
(N)	-LOAD REJECTION CONTACT IN DEH CONTROLLER CABINET
ARC	-AUX. RELAY CABINET
(GAP)	-ALARM CONTACTS LOCATED IN GEN. AUX. CONTROL PANEL
60/Cx	-GENERATOR P.T. FAILURE RELAY-LOCATED IN BOARD "F" IN CONTROL ROOM (DWG. E512-2)
✱	-FURNISHED AND INSTALLED BY (N) ON TURNING GEAR CONSOLET-WIRED TO TERM. BOX "x"
○	-FAN FAILURE ALARM RELAYS LOCATED IN FAN CONTROL PANEL
◇	-LOCATED IN GEN. AUX. CONTROL STATION "GACS."
⌀	-LOCATED IN RPS/REVAB1 TEST PANEL
(⌀)	-LOCATED IN RPS/REVAB2 TEST PANEL
⏚	-CLOSES WHEN E.H. CONTROL POWER SUPPLY FAILS-LOCATED IN DEH GOVERNOR CONTROLLER CABINET
41	-VOLT. REGULATOR SUPPLY BREAKER
PB/MPT	-PUSH BUTTON ELECTRO HYDRAULIC PUMP TEST
71/OL	-HIGH & LOW LUBE OIL LEVEL SW
M/EHB-1	-SEE M/COND-V-609A DWG. E519-5 -EXHAUST HOOD BY-PASS SPRAY VALVE
M/EHB-2	-SEE M/COND-V-609B DWG. E519-5 -EXHAUST HOOD BY-PASS SPRAY VALVE
M/EHB-3	-SEE M/COND-V-609C DWG. E519-5 -EXHAUST HOOD BY-PASS SPRAY VALVE
AFS	-AIR FLOW SWITCH-OPENS ON NO. 1SO. PHASE BUS DUCT AIR FLOW (DWG. E519-11)
SW-7	-THERMOSTAT CLOSES ON H2 HIGH TEMPERATURE
SW-8	-TURBINE END -CONTACT CLOSES ON DEFOAMING TANK LEVEL HI
SW-8A	-EXCITER END -CONTACT CLOSES ON DEFOAMING TANK LEVEL HI
SW-11	-CLOSES ON H2 SIDE SEAL OIL LEVEL LO
TG-P/B-CR/TT1	-EMERGENCY TRIP PUSHBUTTON-MOUNTED IN BD "B"
TG-P/B-CR/TT2	-EMERGENCY TRIP PUSHBUTTON-MOUNTED IN BD "B"
K-7A,B,C	-REACTOR HIGH WATER LEVEL TRIP
DEH-TS-3	-TEMPERATURE SWITCH EH FLUID TEMPERATURE HI
TG-P/B-TG/TT1,TT2	-TURB. TRIP PUSHBUTTON TG 501
TG-DET-TP/A,B,C,	- THRUST BEARING
MD-LS-ML-20A,B, 21A,B,23A,B	-MSR HIGH LEVEL A,B,C
RFW-LS-624A,B,C	-REACTOR HIGH WATER LEVEL
TG-SE-05/A,B,C	-SPEED PICKUP
TG-SE-SC/A,B,C	-SPEED PICKUP

RELAYS

86XU	-UNIT TRIP LOCKOUT RELAY (DWG. E512-2)
86XUOA	-UNIT TRIP OVERALL TRIP LOCKOUT RELAY (DWG. E512-2)
14/ZSX	-ZERO SPEED RELAY-LOCATED IN TERM BOX "x"
ACR/BOP	-EMERGENCY OIL PP-AUX. RELAY DEENERGIZED FAILURE. FOR BOP CIRCUIT POWER.
VHTX	-VOLTS/HERTZ AUX. RELAY
VHT	-VOLTS/HERTZ REGULATOR TRIP RELAY
49X-EOP	-EMERGENCY OIL PUMP OVERLOAD
49X-ASOBP	-AIR SIDE SEAL OIL BACK-UP PUMP OVERLOAD
59/81	-EXCESSIVE VOLTS/HERTZ RELAY
59/81T	-EXCESSIVE VOLTS/HERTZ TIMING RELAY
41TD	-REGULATOR SUPPLY BREAKER AUX. RELAY
41/aX1,2	-REGULATOR SUPPLY BREAKER AUX. RELAY
DCF	-DC FAILURE IN GENERATOR AUX. CONTROL PANEL
62/TGS	-TURN GEAR FAILURE T.D. ALARM RELAY 0-30 SEC.
QSV	-QUICK SOL. VALVE OPERATING RELAY
MX	-EMERG. OIL PUMP RUNNING
MX-X	-AUX. RELAY FOR EMERGENCY OIL PUMP RUNNING-ALARM
TG-X/ZSX	-AUX. RELAY FOR 14/ZSX/ZERO SPEED ALARM
86X1U	-UNIT PRIMARY LOCKOUT RELAY (DWG. E512-2)
86X1UOA	-UNIT SECONDARY LOCKOUT RELAY (DWG. E512-2)
30/64F	-FIELD GROUND DETECTION PWR. SUPPLY FAILURE RELAY
90C	-VOLTAGE REGULATOR ON RELAY
94RB	-VOLTAGE REGULATOR TRIP RELAY
K4	-VOLTAGE REGULATOR FORCING ALARM RELAY
V/HZ	-MAXIMUM VOLTZ/HERTZ RELAY
PC1, PC2	-VOLTAGE REGULATOR LOSS OF FIRING PULSE RELAY
41-A	-REGULATOR BKR. AUTO TRIP ALARM RELAY
94-A	-VOLTAGE REGULATOR TRIP ALARM RELAY
FFA	-REG. COOLING FAN FAILURE ALARM RELAY
FA	-FIELD FORCING ALARM RELAY
VH/A	-VOLTZ/HERTZ LIMIT EXCEEDED ALARM RELAY
FP/A	-REGULATOR BLOWN FUSE OR LOSS OF POWER ALARM RELAY
41TD/A	-REGULATOR BKR. CLOSED ALARM RELAY
PSF/A	-REGULATOR POWER SUPPLY FAILURE ALARM RELAY
R1	-D.C. POWER FAILURE RELAY FOR GEN. AUX. CONTROL PANEL
R3	-STATOR COIL WATER INLET CONDUCTIVITY HI RELAY
R4	-STATOR COIL WATER INLET CONDUCTIVITY HI-HI RELAY
R5	-DEMINERALIZER OUTLET CONDUCTIVITY HI RELAY
64K	-GENERATOR GROUND DETECTION ALARM RELAY
64E/X	-EXCITER GROUND DETECTION ALARM RELAY
63Y/AM1	-AUX. RELAY

TRANSMITTERS

TG-PT-1A/1B/1C	-BRG. OIL PRESS TRANSMITTERS
MS-PT-8A,B,C	-CONDENSER 1 PRESSURE TRANSMITTER
DEH-PT-63A,B,C	-EH HEADER PRESS TRANSMITTERS
DEH-PS-TRIP/A,B,C,D	-TRIP BLOCK PRESS
MS-DPT-63A,B,C	-TURB. 1st STAGE DIFF PRESS.

) SYSTEM ALARM RELAYS LOCATED IN ARC

EHL/1X - LEVEL HI
EHL/2X - LEVEL LO-LO
EHL/3X - LEVEL LO
EHPR/X - PRESSURE RETURN HI
EHPF/X - PRESSURE DIFF. ON FILTER
EHPH/X - PRESSURE HI
EHPL/X - PRESSURE LO
EHTH/X - TEMPERATURE HI

REFERENCE DWG. LIST

TITLE	DWG.
TURNING GEAR	E520-3
TURNING GEAR SOLENOID VALVES	E520-3
ELECTRO-HYDRAULIC PUMPS	E520-3
BEARING OIL PUMP	E520-3
SEAL OIL BACK UP PUMP	E520-3
BEARING LIFT PUMP	EWD-48E-004
EMERGENCY OIL PUMP	E520-3
OIL VAPOR EXTRACTOR, RESERVOIR	E520-4
OIL VAPOR EXTRACTOR, GENERATOR	E520-4
GLAND STEAM COND AIR EXHAUSTERS	E520-4
EXHAUST HOOD SPRAY VALVES	E520-3
AUTO STOP RESET & VAC TRIP LATCH	E520-4
INTERCEPT & REHEAT STOP VALVES TEST & LIGHTS	E520-4
LOW EH FLUID LEVEL LOCK OUT RELAY	E520-5
ANTIMONITORING PROTECTION	E520-5
TURBINE TRIP CIRCUIT	E520-5
REVERSE CURRENT VALVES	E520-5
TURBINE ALARMS	E520-5
ROTOR GLAND STEAM SPILLOVER SHUT OFF VALVE	E520-4
ROTOR GLAND STEAM SPILLOVER BY PASS VALVE	E520-4
STEAM INLET VALVE TEST INDICATION	E520-4
STEAM BY PASS VALVES INDICATION	E520-4
STEAM PIPE DRAIN VALVES	E520-4
REHEATER CONTROL VALVES	E520-2
VOLTAGE REGULATOR CONTROL	E520-6
VOLTAGE REGULATOR BASE ADJUSTER	E520-6
VOLTAGE REGULATOR VOLTAGE ADJUSTER	E520-6
VOLTAGE REGULATOR ALARMS	E520-6
VOLTAGE REGULATOR SUPPLY BKR	E520-6
FIELD GROUND PROTECTION	E520-6
CONTROL SW DEVELOPMENTS	E520-2A
LIMIT SW DEVELOPMENTS	E520-2
HYDROGEN SIDE SEAL OIL PUMP	E520-7
AIR SIDE SEAL OIL PUMP	E520-7
AIR SIDE SEAL OIL BACK-UP PUMP	E520-7
GENERATOR AUX. PNL. REMOTE ALARMS	E520-7
VACUUM BREAKERS	E520-4
ANTI MOTORING LOCKOUT CIRCUIT	E520-5
QUICK SOL. VALVES	E520-5
RPS/REVAB - GOV. VALVE FAST CLOSURE EH PRESS SW. TEST	E520-2
EXCITER FIELD GROUND DETECTION	E520-6
EWD-51E-017 STATOR COIL WATER PUMP SCW-P-1	-
EWD-51E-018 STATOR COIL WATER PUMP SCW-P-2	-
CVI 218-03,7864 GENERATOR AUX. CONTROL STATION "GACS"	-
TRIP TRICON I/O CARD POINTS	E520-8
MONITORING TRICON I/O CARD POINT-9	E520-9
CONTROL TRICON #1 I/O CARD POINT-10	E520-10
CONTROL TRICON #2 I/O CARD POINT-11	E520-11

VALVE	EPN	LOCATION
RCV1	MS-TCV-115A	
RCV2	MS-TCV-115B	
RCV3	MS-TCV-115C	
RCV4	MS-TCV-115D	
BV1	MS-V-160D	
BV2	MS-V-160C	
BV3	MS-V-160B	
BV4	MS-V-160A	
1RR	MS-V-163A	NORTH
1IR	MS-V-164A	NORTH
1IL	MS-V-165A	SOUTH
1RL	MS-V-166A	SOUTH
2RR	MS-V-163B	NORTH
2IR	MS-V-164B	NORTH
2IL	MS-V-165B	SOUTH
2RL	MS-V-166B	SOUTH
3RR	MS-V-163C	NORTH
3IR	MS-V-164C	NORTH
3IL	MS-V-165C	SOUTH
3RL	MS-V-166C	SOUTH

Columbia Generating Station
Final Safety Analysis Report

Turbine Generator Control Elementary Diagram

Draw. No. E520-1 | Rev. 13 | Figure 10.2-7.1

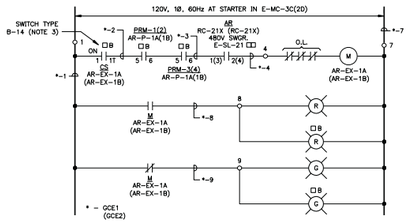

SEAL STEAM CONDENSER AIR EXHAUSTERS AR-EX-1A (AR-EX-1B)

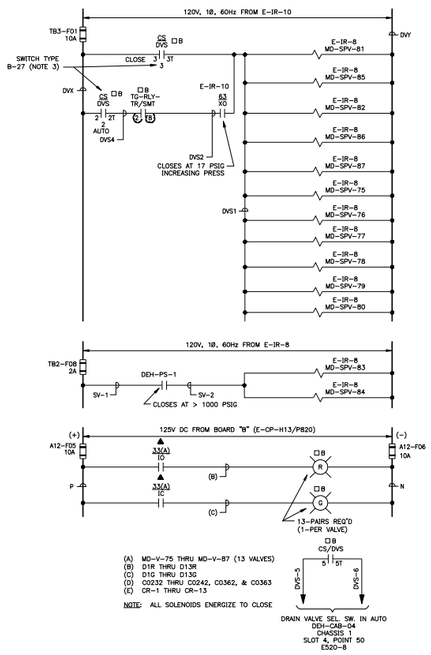

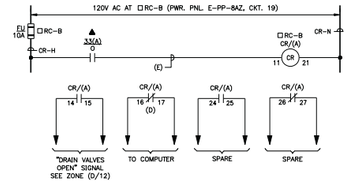

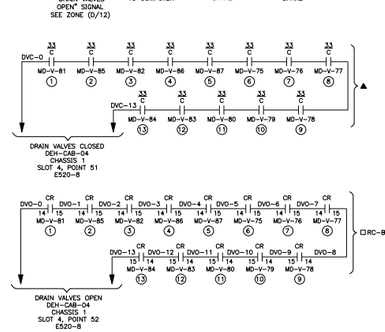

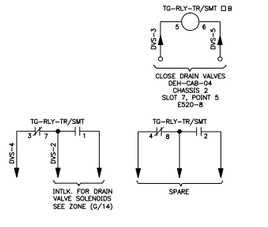

STEAM PIPE DRAIN VALVES

NOTES:

1. FOR NOTES, LEGEND, AND LOCAL CONTROL SWITCH DEVELOPMENT SEE E520-1.
2. DELETED
3. FOR CONTROL SWITCH DEVELOPMENT, AND SWITCH TYPE A-2 SEE DWG. E523-2, AND FOR SWITCH TYPE B-14, B-23, & B-27 SEE E520-2A.
4. DELETED

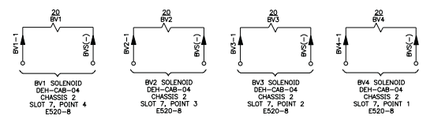

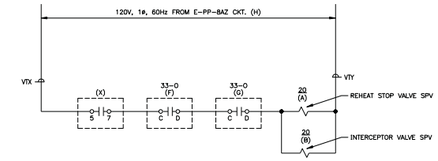

TAG No. (A)	TAG No. (B)	DEH OUTPUT (X)	INTERLOCK (F)	INTERLOCK (G)	CIRCUIT POWER (H)	TERM BOX (R)
1RL	1IL	DEH-RLY-01/3 (MS-SPV-165A & MS-SPV-166A)	MS-V-163A	MS-V-164A	E-PP-8AZ CKT.9	TB-1B
1RR	1IR	DEH-RLY-02/3 (MS-SPV-163A & MS-SPV-164A)	MS-V-166A	MS-V-165A	E-PP-8AZ CKT.12	TB-1A
2RL	2IL	DEH-RLY-01/4 (MS-SPV-165B & MS-SPV-166B)	MS-V-163B	MS-V-164B	E-PP-8AZ CKT.9	TB-2B
2RR	2IR	DEH-RLY-02/4 (MS-SPV-163B & MS-SPV-164B)	MS-V-166B	MS-V-165B	E-PP-8AZ CKT.12	TB-2A
3RL	3IL	DEH-RLY-01/5 (MS-SPV-165C & MS-SPV-166C)	MS-V-163C	MS-V-164C	E-PP-8AZ CKT.9	TB-3B
3RR	3IR	DEH-RLY-02/5 (MS-SPV-163C & MS-SPV-164C)	MS-V-166C	MS-V-165C	E-PP-8AZ CKT.12	TB-3A

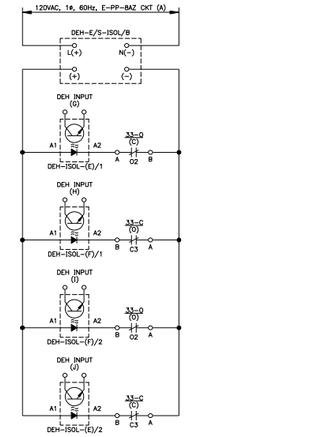

CKT No. (A)	PWR SUP (B)	LIM SW (C)	LIM SW (D)	VALVE (E)	VALVE (F)	DEH INPUT (G)	DEH INPUT (H)	DEH INPUT (I)	DEH INPUT (J)
9	B	1IL	1RL	165A	166A	CIV 1 CLOSE	RHSV 1 OPEN	RHSV 1 CLOSE	CIV 1 OPEN
12	A	1IR	1RR	164A	163A	CIV 2 CLOSE	RHSV 2 OPEN	RHSV 2 CLOSE	CIV 2 OPEN
9	B	2IL	2RL	165B	166B	CIV 3 CLOSE	RHSV 3 OPEN	RHSV 3 CLOSE	CIV 3 OPEN
12	A	2IR	2RR	164B	163B	CIV 4 CLOSE	RHSV 4 OPEN	RHSV 4 CLOSE	CIV 4 OPEN
9	B	3IL	3RL	165C	166C	CIV 5 CLOSE	RHSV 5 OPEN	RHSV 5 CLOSE	CIV 5 OPEN
12	A	3IR	3RR	164C	163C	CIV 6 CLOSE	RHSV 6 OPEN	RHSV 6 CLOSE	CIV 6 OPEN

FSAR FIG.

Columbia Generating Station
Final Safety Analysis Report

Turbine Generator Control Elementary Diagram

Draw. No. E520-4 | Rev. 35 | Figure 10.2-7.2

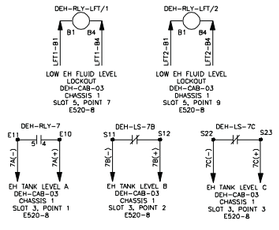

LOW EH FLUID LEVEL LOCK-OUT

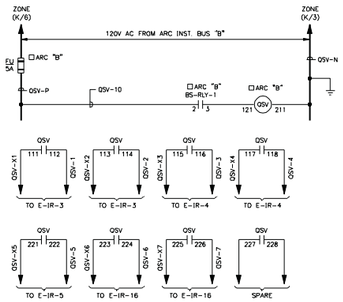

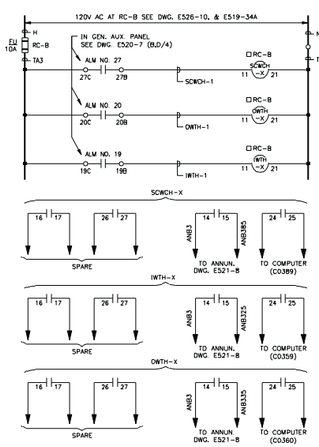

TURBINE ALARMS

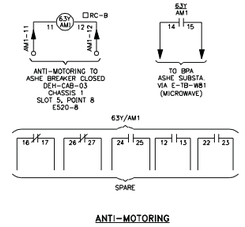

ANTI-MOTORING

VALVES (C1) TO (C10) DE-ENERGIZE TO CLOSE REVERSE CURRENT VALVES; ALL VALVES ARE LOCATED LOCALLY.

INSTR. RACK	(A)	3	4	5	16	
OSV RELAY CONTACT NUMBERS	(a)-(b)	111-112	115-116	221-222	223-224	
	(c)-(d)	113-114	117-118	NOT APPLICABLE	225-226	
QUICK SOLENOID VALVES	(C1)	BS-QSV-5A	BS-QSV-5B	BS-QSV-8E	HD-QSV-31A/HD-SPV-34A	(C1A)
	(C2)	BS-QSV-7A	BS-QSV-7B	BS-QSV-8F	HD-QSV-31B/HD-SPV-34B	(C2A)
	(C3)	BS-QSV-8A	BS-QSV-8C	BS-QSV-10E	HD-QSV-32A	
	(C4)	BS-QSV-8B	BS-QSV-8D	BS-QSV-10F	HD-QSV-32B	
	(C5)	BS-QSV-10A	BS-QSV-10C	BS-QSV-13C	HD-QSV-33A	
	(C6)	BS-QSV-10B	BS-QSV-10D	NOT USED	HD-QSV-31C/HD-SPV-34C	(C6A)
	(C7)	BS-QSV-13A	BS-QSV-13B	NOT USED	HD-QSV-31D/HD-SPV-34D	(C7A)
	(C8)	BS-QSV-21A	BS-QSV-21B	NOT USED	HD-QSV-32C	
	(C9)	NOT USED	NOT USED	NOT USED	HD-QSV-32D	
	(C10)	NOT USED	NOT USED	NOT USED	HD-QSV-33B	
WIRE NUMBER SUFFIX	(D)	1	3	5	6	
	(E)	2	4	NOT USED	7	
FUSE NUMBER	(F)	TB1A-F21	TB6B-F14	TB6B-F14	TB1A-F07	
	(G)	TB1A-F22	TB1A-F22	NOT USED	TB1B-F07	

QUICK ACTING SOL. VALVES FOR REVERSE CURRENT VALVES

NOTES:

1. FOR NOTES, LEGEND, AND SWITCH DEVELOPMENT SEE E520-1, 2, & 2A.

2 DELETED

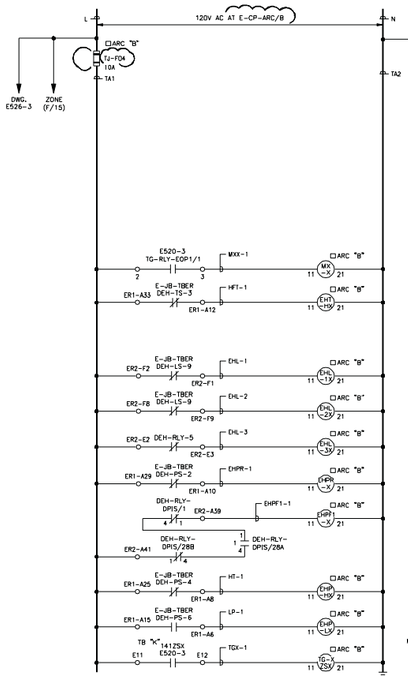

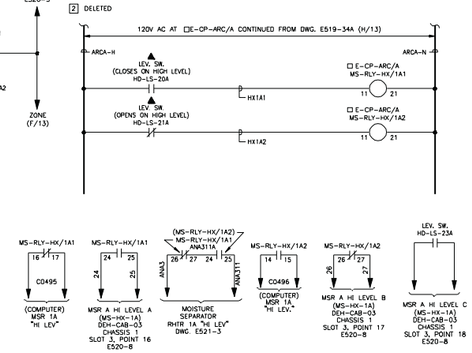

TURBINE ALARMS

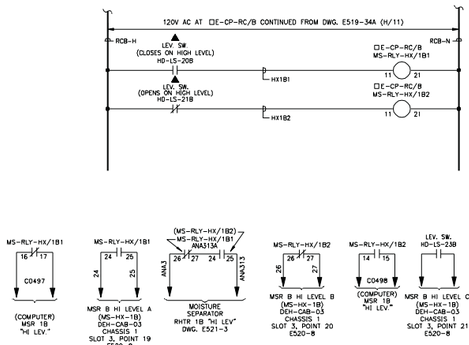

TURBINE ALARMS

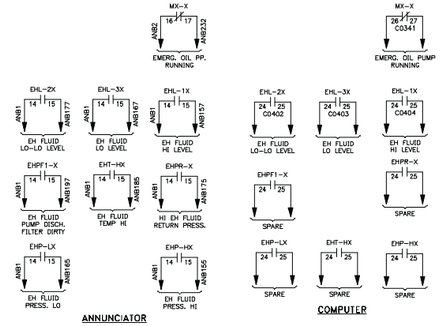

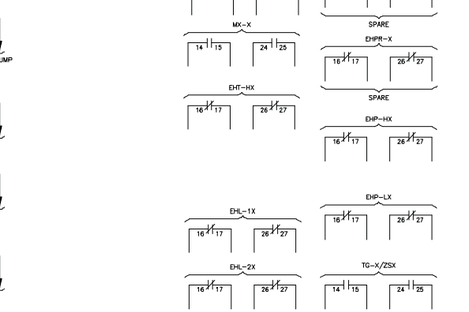

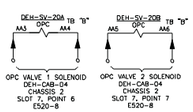



TURBINE ALARMS

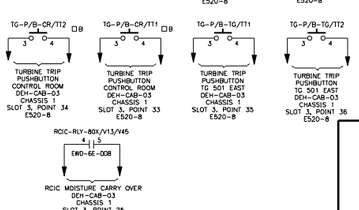

TURBINE ALARMS

FSAR FIG.

Columbia Generating Station
Final Safety Analysis Report

Turbine Generator Control Elementary Diagram

Draw. No. E520-5	Rev. 40	Figure 10.2-7.3

10.3 MAIN STEAM SUPPLY SYSTEM

10.3.1 DESIGN BASES

The main steam supply system is designed for the following conditions:

a. Deliver steam from the reactor to the turbine generator from warmup to 105% of rated load,

b. Provide steam for the second-stage reheaters and steam-jet air ejectors,

c. Bypass steam to the main condenser during startup and in the event steam requirements of the turbine generator are less than that produced by the reactor,

d. Provide steam to the gland seal steam evaporator during startup, low load operation, and shutdown,

e. Provide steam to drive reactor feedwater pumps during startup and low load operation, and

f. Provide steam to the offgas preheaters.

The design pressure and temperature of the main steam piping is 1250 psig and 575°F.

The main steam lines are designed to include accesses to permit inservice inspection and testing (refer to Sections 5.2.4 and 6.6).

Design codes are given in Table 3.2-1, item 2, Nuclear Boiler System, and item 43, Power Conversion System. The environmental design bases for the main steam supply system are contained in Section 3.11.

10.3.2 SYSTEM DESCRIPTION

The main steam supply system is shown in Figures 10.3-1 and piping drawings are shown in Figures 3.6-32, 3.6-33, 3.6-34, 3.6-35, 3.6-50, 3.6-51, 3.6-53, 3.6-58, 3.6-60, and 10.3-2. The main steam line piping consists of four 30-in. (26-in. in reactor building) lines extending from the reactor pressure vessel to the main steam header located upstream of the turbine stop and control valves. This header placement ensures a positive means of bypassing steam via the turbine bypass system during transient conditions and startup. Branch lines from the main steam line provide the steam requirements for the reactor feed pumps, second stage reheaters, gland seal steam evaporator, offgas preheaters, and steam jet air ejectors.

The MSIVs are a wye-pattern-type globe valve utilizing pneumatic air to open and spring load with pneumatic air assist to close. Energizing control valves provide pilot and actuator air to open the valve. Deenergizing the control valves removes pilot air which vents actuator opening air and directs air to assist the spring force in closing the valve.

Loss of compressed air failure mode results are

a. Loss of compressed air due to loss of nonseismic air lines* results in loss of pilot air and closure of the MSIV by both spring force and pneumatic air cylinder force.

b. Loss of compressed air due to loss of Seismic Category I air lines† results in loss of both pilot air and actuator air with the MSIVs closing by spring force only.

Under normal operation the air supply maintains the required air for holding the valve open and charging the air storage tank. The check valve at the air storage tank inlet ensures a pneumatic supply for assist in closing the valve. No safety-related makeup supply is required for closure of the MSIVs for safe plant shutdown.

The removal of electrical power or failure of both the solenoids on the control valve automatically initiates closure of the MSIVs. Safety-related components ensuring removal of power to the solenoids when required are the only electrical power requirement. Section 9.3.1 describes the compressed air systems.

Equalizing lines connecting steam lines outside of the containment are used to equalize pressure across the main steam line isolation valves prior to restart following a steam line isolation. Assuming all steam line isolation valves have closed, the outer containment isolation valves are opened first and the drain lines are used to warm up and pressurize the outside steam lines. Following warmup the inboard main steam line isolation valves are opened.

10.3.3 SAFETY EVALUATION

Table 3.2-1 lists the applicable seismic category, quality group classification, and safety class for the main steam supply system. The effects of main steam line breaks and other accident conditions outside the containment are evaluated in Chapter 15. Protection against dynamic effects associated with the postulated rupture of piping inside or outside of containment is discussed in Section 3.6.

---

* Nonseismic lines are those lines supplying air to the isolation valve upstream of the check valve and to the pilot side of the air pilot valves (Figure 9.3-1, detail B).

† Seismic Category I lines include an air storage tank, check valve, and lines from the check valve to the actuator pilot valve (Figure 9.3-1, detail B).

10.3.4 INSPECTION AND TESTING REQUIREMENTS

The main steam lines were hydrostatically tested prior to initial operation. Nondestructive testing is performed in accordance with the applicable code requirements.

Preoperational and inservice inspection of the main steam lines and the main steam line isolation valves are presented in Sections 5.2.4 and 6.6.

The use of four main steam lines permits inspection and testing of the turbine stop, control, reheat stop, and intercept valves and main steam line isolation valves during plant operation with a minimum of load reduction.

10.3.5 WATER CHEMISTRY

This section is not applicable to a BWR. See Section 10.4.6 for reactor coolant water chemistry considerations.

10.3.6 STEAM AND FEEDWATER SYSTEM MATERIALS

10.3.6.1 Fracture Toughness

Impact tests in accordance with the size limitations specified in ASME Code Section III, Class 1, are performed on all ASME Code Section III, Class 1, main steam and feedwater materials, as well as Class 2 main steam system materials for all pressure retaining ferritic steel parts. The tests are conducted at a temperature of 45°F or lower in accordance with NB or NC-2310 of the Summer 1972 or Winter 1973 Addendum of ASME Code Section III, as applicable.

10.3.6.2 Materials Selection and Fabrication

All materials used for portions of the main steam system described in this section are included in Appendix I to Section III of the ASME Boiler and Pressure Vessel (B&PV) Code. The requirements for welding the main steam piping from the reactor to the turbine generator are in accordance with ASME Section III, 1971 Edition through the Winter 1973 Addenda. The welding requirements for other steam and feedwater piping are in accordance with ANSI B31.1, October 1973 (see Section 3.2).

Cleaning of components in the main steam system is in accordance with ANSI N45.2.1 (October 1973) or ASTM A380-57 (October 1973) for stainless steel surfaces and Regulatory Guide 1.37.

Degree of conformance to the following Regulatory Guides is addressed in Section 1.8: 1.31, Control of Stainless Steel Welding; 1.36, Nonmetallic Thermal Insulation for Austenitic Stainless Steel; 1.44, Control of the Use of Sensitized Stainless Steel; 1.50, Control of Preheat Temperature for Welding of Low-Alloy Steel; and 1.71, Welder Qualification for Areas of Limited Accessibility.

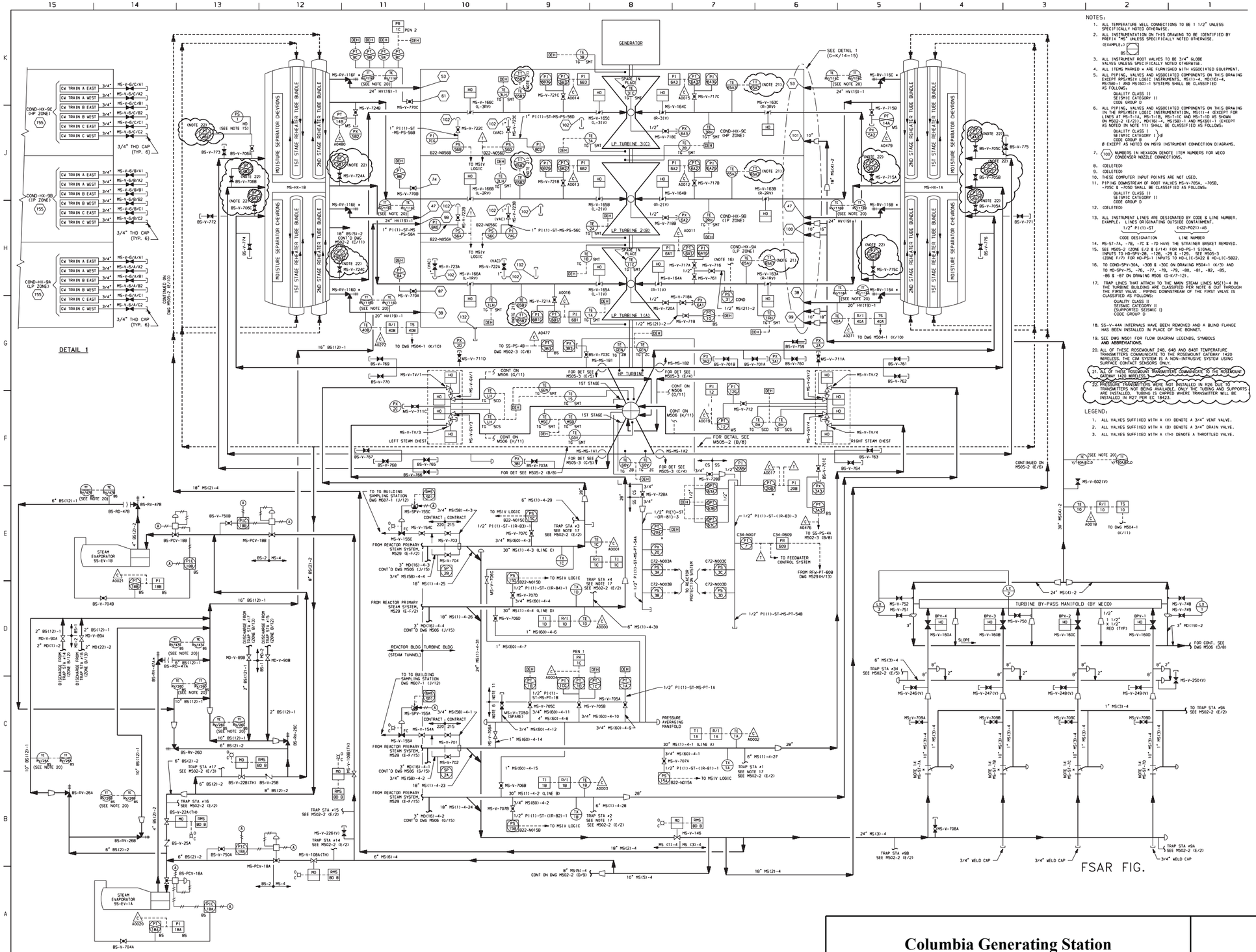

NOTES:

1. ALL TEMPERATURE WELL CONNECTIONS TO BE 1 1/2" UNLESS SPECIFICALLY NOTED OTHERWISE.
2. ALL INSTRUMENTATION ON THIS DRAWING TO BE IDENTIFIED BY PREFIX "MS" UNLESS SPECIFICALLY NOTED OTHERWISE. (EXAMPLE:) MS
3. ALL INSTRUMENT ROOT VALVES TO BE 3/4" GLOBE VALVES UNLESS SPECIFICALLY NOTED OTHERWISE.
4. ALL ITEMS MARKED * ARE FURNISHED WITH ASSOCIATED EQUIPMENT.
5. ALL PIPING, VALVES AND ASSOCIATED COMPONENTS ON THIS DRAWING EXCEPT RPS/MSIV LOGIC INSTRUMENTS, MS(13)-4, M016(8)-4, MS-TS80-1 AND MS-TS60-1 SYSTEMS SHALL BE CLASSIFIED AS FOLLOWS:
   QUALITY CLASS I
   SEISMIC CATEGORY I
   CODE GROUP D
6. ALL PIPING, VALVES AND ASSOCIATED COMPONENTS ON THIS DRAWING IN THE RPS/MSIV LOGIC INSTRUMENTATION, MS(13)-4 (EXCEPT FOR LINES AT MS-1-1A, MS-1-1B, MS-T-1C AND MS-T-1D AS SHOWN ON M502-2 (E/23), M016(4)-4, MS(58)-1 AND MS(60)-1 (EXCEPT AS NOTED IN NOTE 11) SHALL BE CLASSIFIED AS FOLLOWS:
   QUALITY CLASS I
   SEISMIC CATEGORY I (B)
   CODE GROUP B
   (B EXCEPT AS NOTED ON M619 INSTRUMENT CONNECTION DIAGRAMS.
7. (100) NUMBERS IN HEXAGON DENOTE ITEM NUMBERS FOR WECO CONDENSER NOZZLE CONNECTIONS.
8. (DELETED)
9. (DELETED)
10. THESE COMPUTER INPUT POINTS ARE NOT USED.
11. PIPING DOWNSTREAM OF ROOT VALVES MS-V-705A, -705B, -705C & -705D SHALL BE CLASSIFIED AS FOLLOWS:
    QUALITY CLASS II
    SEISMIC CATEGORY II
    CODE GROUP D
12. (DELETED)
13. ALL INSTRUMENT LINES ARE DESIGNATED BY CODE & LINE NUMBER. EXAMPLE: LINES ORIGINATING OUTSIDE CONTAINMENT.

CODE DESIGNATION	LINE NUMBER
1/2" P1(3)-ST	(N32-P023)-46

14. MS-ST-7A, -7B, -7C & -7D HAVE THE STRAINER BASKET REMOVED.
15. SEE M505-2 (ZONE E/2 & E/14) FOR HD-PS-1 SIGNAL INPUTS TO HD-SPY-29, -128, -29 & -129. SEE M505-3 (ZONE F/7) FOR HD-PS-1 INPUTS TO HD-LIC-5A22 & HD-LIC-5B22.
16. TO COND-SPY-30A, -30B & -30C ON DRAWING M504-1 (C/3) AND TO MD-SPY-75, -76, -77, -78, -79, -80, -81, -82, -85, -86 & -87 ON DRAWING M506 (G-K/7-12).
17. TRAP LINES THAT ATTACH TO THE MAIN STEAM LINES MS(1)-4 IN THE TURBINE BUILDING ARE CLASSIFIED PER NOTE 6 OUT THROUGH THE FIRST VALVE. PIPING DOWNSTREAM OF THE FIRST VALVE IS CLASSIFIED AS FOLLOWS:
    QUALITY CLASS II
    SEISMIC CATEGORY II
    (SUPPORTED SEISMIC I)
    CODE GROUP D
18. SS-V-44A INTERNALS HAVE BEEN REMOVED AND A BLIND FLANGE HAS BEEN INSTALLED IN PLACE OF THE BONNET.
19. SEE DWG M501 FOR FLOW DIAGRAM LEGENDS, SYMBOLS AND ABBREVIATIONS.
20. ALL OF THESE ROSEMOUNT 248, 648 AND 848T TEMPERATURE TRANSMITTERS COMMUNICATE TO THE ROSEMOUNT GATEWAY 1420 WIRELESS. THE CIM SYSTEM IS A NON-INTRUSIVE SYSTEM USING SURFACE CONTACT SENSORS ONLY.
21. ALL OF THESE ROSEMOUNT TRANSMITTERS COMMUNICATE TO THE ROSEMOUNT GATEWAY 1420 WIRELESS.
22. PRESSURE TRANSMITTERS WERE NOT INSTALLED IN R26 DUE TO TRANSMITTERS NOT BEING AVAILABLE. ONLY THE TUBING AND SUPPORTS WERE INSTALLED. TUBING IS CAPPED WHERE TRANSMITTER WILL BE INSTALLED IN R27 PER EC 18423.

LEGEND:

1. ALL VALVES SUFFIXED WITH A (V) DENOTE A 3/4" VENT VALVE.
2. ALL VALVES SUFFIXED WITH A (D) DENOTE A 3/4" DRAIN VALVE.
3. ALL VALVES SUFFIXED WITH A (TH) DENOTE A THROTTLED VALVE.

Columbia Generating Station
Final Safety Analysis Report

Main Steam Supply System

Draw. No. M502-1	Rev. 47	Figure 10.3-1.1

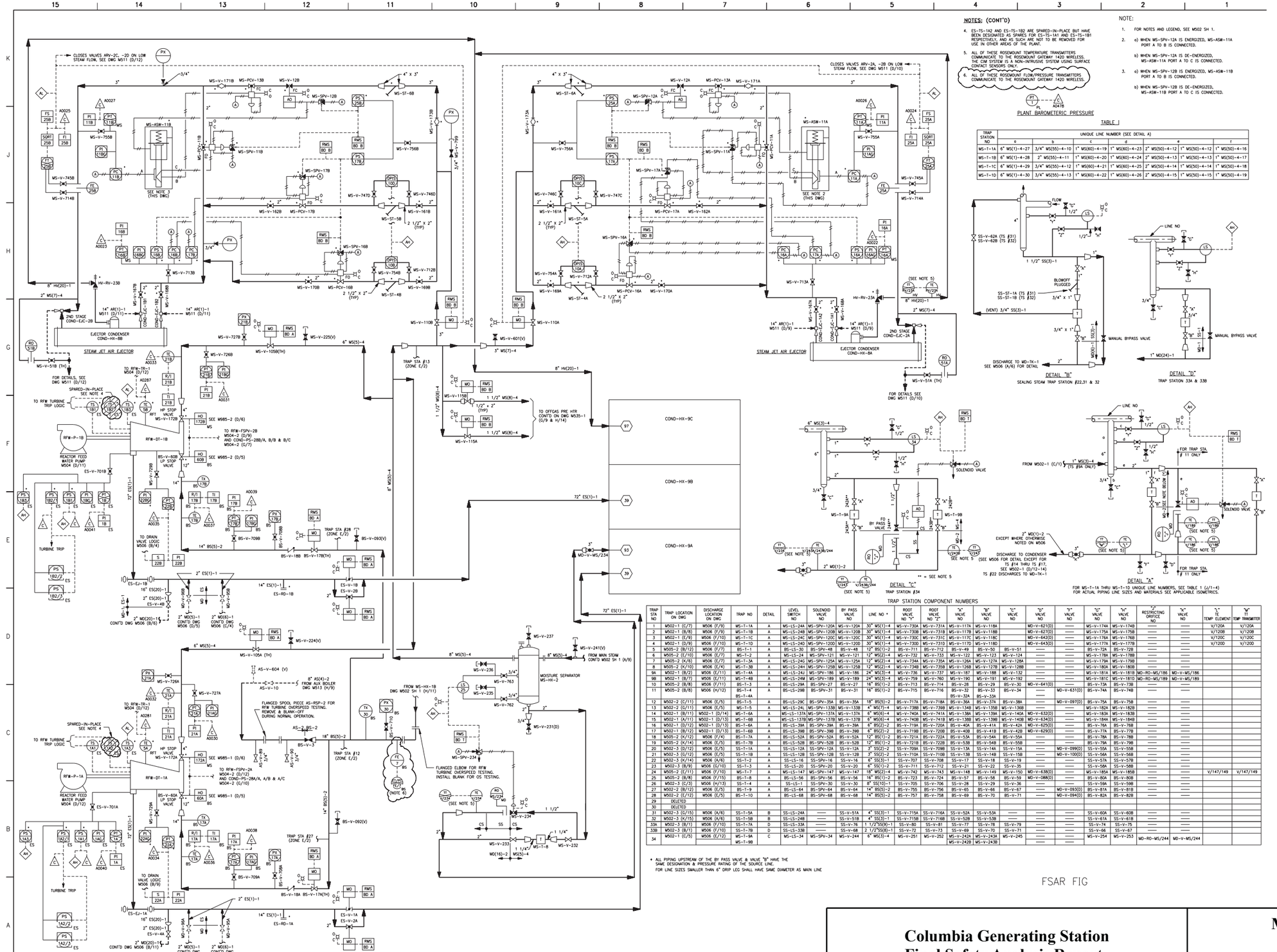
CLOSES VALVES ARV-2C, -2D ON LOW STEAM FLOW, SEE DWG MS11 (D/12)
CLOSES VALVES ARV-2A, -2B ON LOW STEAM FLOW, SEE DWG MS11 (D/10)
STEAM JET AIR EJECTOR
EJECTOR CONDENSER COND-HX-8B
2ND STAGE COND-EJC-2B
EJECTOR CONDENSER COND-HX-8A
2ND STAGE COND-EJC-2A
SPARED-IN-PLACE SEE NOTE 4
TO RFW TURBINE TRIP LOGIC
HP STOP RFT VALVE MS-V-172A
REACTOR FEED WATER PUMP MS04 (D/11)
RFW-DT-1B
RFW-DT-1A
TURBINE TRIP
TO DRAIN VALVE LOGIC MS06 (B/4)
TO DRAIN VALVE LOGIC MS06 (B/9)
SEE NOTE 3 (THIS DWG)
SEE NOTE 2 (THIS DWG)
TRAP STA #28 (ZONE E/2)
TRAP STA #27 (ZONE E/2)
TRAP STA #12 (ZONE E/2)
TRAP STA #13 (ZONE E/2)
TRAP STA #34 (ZONE E/2)
FROM MS-HX-1B DWG MS02 SH 1 (H/11)
FROM MAIN STEAM CONT'D MS02 SH 1 (A/9)
MOISTURE SEPARATOR MS-HX-2
FLANGED SPOOL PIECE AS-RSP-2 FOR RFW TURBINE OVERSPEED TESTING. REMOVE & BLANK-OFF DURING NORMAL OPERATION.
FLANGED ELBOW FOR RFW TURBINE OVERSPEED TESTING. INSTALL BLANK FOR OS TESTING.
FOR DETAILS, SEE DWG MS11 (D/12)
FOR DETAILS SEE DWG MS11 (D/10)
TO RFW-TR-1 MS04 (D/12)
TO RFW-FSPV-2B MS04-2 (D/9) AND COND-PS-28B/A, B/B & B/C MS04-2 (G/7)
TO RFW-FSPV-2A MS04-2 (D/12) AND COND-PS-28A/A, A/B & A/C MS04-2 (D/10)
TO OFFGAS PRE HTR CONT'D ON DWG MS35-1 (G/9 & H/14)
SEE MS85-2 (D/6)
SEE MS85-2 (D/5)
SEE MS85-1 (D/5)
CONT'D DWG MS06 (B/6)
CONT'D DWG MS06 (D/5)
CONT'D DWG MS06 (C/4)
CONT'D DWG MS06 (D/11)
CONT'D DWG MS06 (B/11)
CONT'D DWG MS06 (D/9)
COND-HX-9C
COND-HX-9B
COND-HX-9A
SOLENOID VALVE
MANUAL BYPASS VALVE
DETAIL "B" SEALING STEAM TRAP STATION #22,31 & 32
DETAIL "C" TRAP STATION #34
DETAIL "D" TRAP STATION 33A & 33B
DETAIL "E" FOR MS-T-1A THRU MS-T-1D UNIQUE LINE NUMBERS, SEE TABLE 1 (J/1-4) FOR ACTUAL PIPING LINE SIZES AND MATERIALS SEE APPLICABLE ISOMETRICS.
PLANT BAROMETERIC PRESSURE
DISCHARGE TO CONDENSER (SEE MS06 FOR DETAIL EXCEPT FOR TS #14 THRU TS #17, SEE MS02-1 (D/12-14) TS #22 DISCHARGES TO MD-TK-1
2" MD(1)-2 EXCEPT WHERE OTHERWISE NOTED ON MS06
DISCHARGE TO MD-TK-1 SEE MS06 (A/6) FOR DETAIL
FOR TRAP STA # 11 ONLY
SEE NOTE BELOW
SEE NOTE 5
SEE NOTE 5
SEE NOTE 5

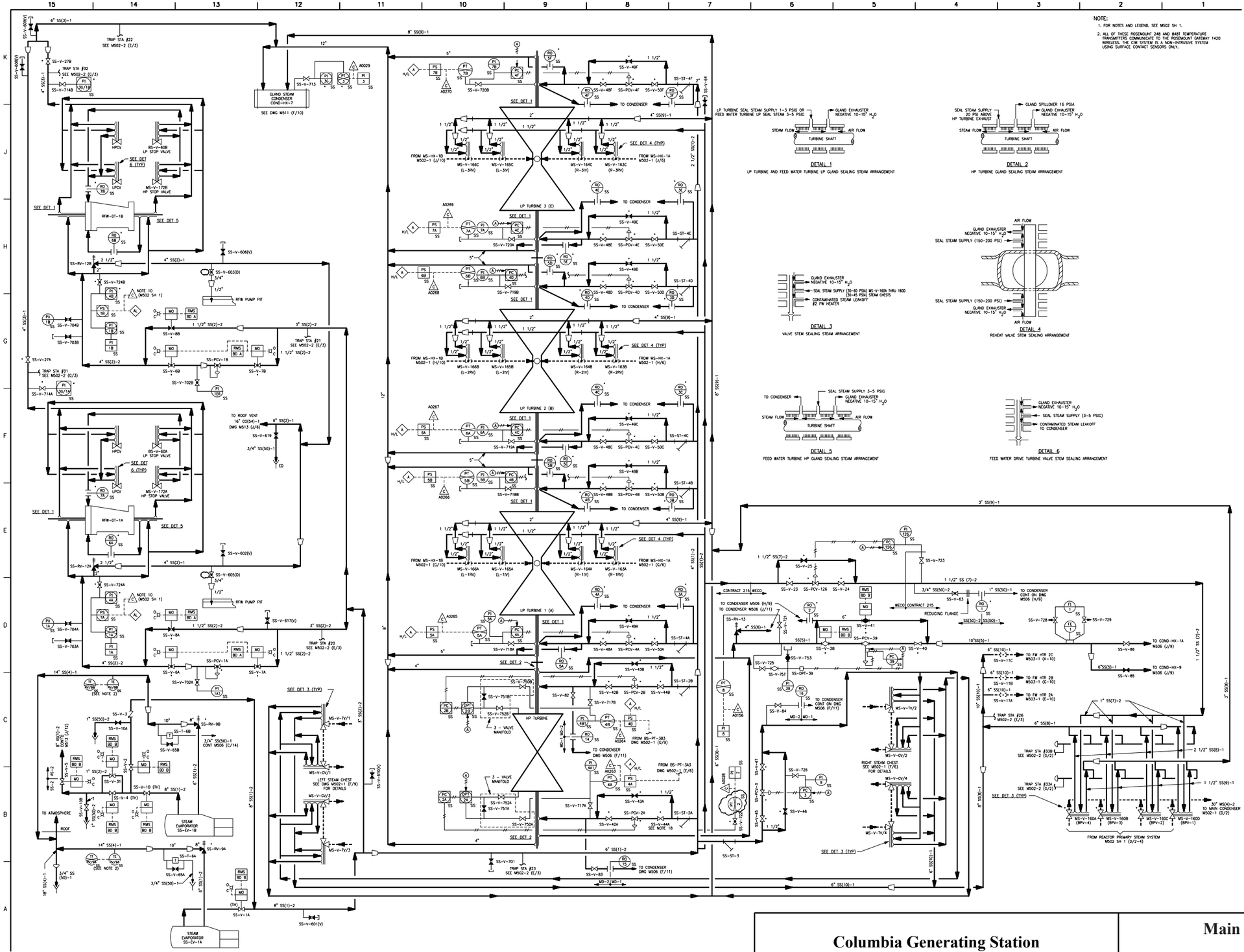

Columbia Generating Station
Final Safety Analysis Report

Main Steam Supply System

Draw. No. M502-3	Rev. 31	Figure 10.3-1.3

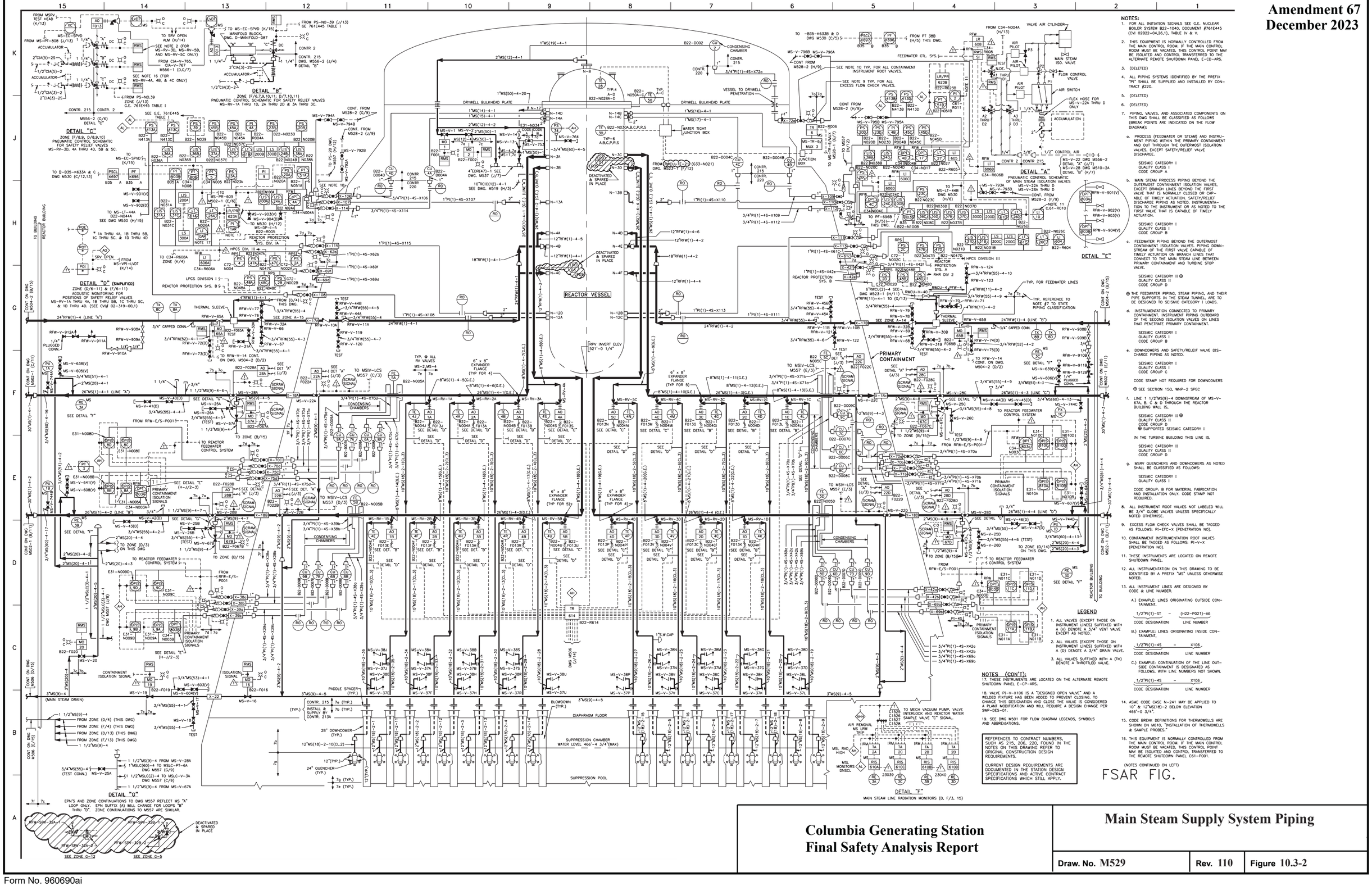

NOTES:

1. FOR ALL INITIATION SIGNALS SEE G.E. NUCLEAR BOILER SYSTEM B22-1040, DOCUMENT #761E445 (CVI 02822-04,26,1), TABLE IV & V.
2. THIS EQUIPMENT IS NORMALLY CONTROLLED FROM THE MAIN CONTROL ROOM. IF THE MAIN CONTROL ROOM MUST BE VACATED, THIS CONTROL POINT MAY BE ISOLATED AND CONTROL TRANSFERRED TO THE ALTERNATE REMOTE SHUTDOWN PANEL E-CD-ARS.
3. (DELETED)
4. ALL PIPING SYSTEMS IDENTIFIED BY THE PREFIX "PI" SHALL BE SUPPLIED AND INSTALLED BY CONTRACT #220.
5. (DELETED)
6. (DELETED)
7. PIPING, VALVES, AND ASSOCIATED COMPONENTS ON THIS DWG SHALL BE CLASSIFIED AS FOLLOWS (BREAK POINTS ARE INDICATED ON THE FLOW DIAGRAM):

   a. PROCESS (FEEDWATER OR STEAM) AND INSTRUMENT PIPING WITHIN THE PRIMARY CONTAINMENT AND OUT THROUGH THE OUTERMOST ISOLATION VALVES, EXCEPT SAFETY/RELIEF VALVE DISCHARGE:

      SEISMIC CATEGORY I
      QUALITY CLASS I
      CODE GROUP A

   b. MAIN STEAM PROCESS PIPING BEYOND THE OUTERMOST CONTAINMENT ISOLATION VALVES, EXCEPT BRANCH LINES BEYOND THE FIRST VALVE THAT IS NORMALLY CLOSED OR CAPABLE OF TIMELY ACTUATION. SAFETY/RELIEF DISCHARGE PIPING AS NOTED. INSTRUMENTATION TO THE INSTRUMENT OR AS NOTED TO THE FIRST VALVE THAT IS CAPABLE OF TIMELY ACTUATION.

      SEISMIC CATEGORY I
      QUALITY CLASS I
      CODE GROUP B

   c. FEEDWATER PIPING BEYOND THE OUTERMOST CONTAINMENT ISOLATION VALVES. PIPING DOWNSTREAM OF THE FIRST VALVE CAPABLE OF TIMELY ACTUATION ON BRANCH LINES THAT CONNECT TO THE MAIN STEAM LINE BETWEEN PRIMARY CONTAINMENT AND TURBINE STOP VALVE.

      SEISMIC CATEGORY II ⊕
      QUALITY CLASS II
      CODE GROUP D

   ⊕ THE FEEDWATER PIPING, STEAM PIPING, AND THEIR PIPE SUPPORTS IN THE STEAM TUNNEL ARE TO BE DESIGNED TO SEISMIC CATEGORY I LOADS.

   d. INSTRUMENTATION CONNECTED TO PRIMARY CONTAINMENT. INSTRUMENT PIPING OUTBOARD OF THE SECOND ISOLATION VALVES ON LINES THAT PENETRATE PRIMARY CONTAINMENT.

      SEISMIC CATEGORY I
      QUALITY CLASS I
      CODE GROUP B

   e. DOWNCOMERS AND SAFETY/RELEIF VALVE DISCHARGE PIPING AS NOTED.

      SEISMIC CATEGORY I
      QUALITY CLASS I
      CODE GROUP C

      CODE STAMP NOT REQUIRED FOR DOWNCOMERS

      ⊕ SEE SECTION 150, WNP-2 SPEC

   f. LINE 1 1/2"MS(9)-4 DOWNSTREAM OF MS-V-67A, B, C & D THROUGH THE REACTOR BUILDING WALL IS.

      SEISMIC CATEGORY II ⊕
      QUALITY CLASS II
      CODE GROUP D
      ⊕ SUPPORTED SEISMIC CATEGORY I

      IN THE TURBINE BUILDING THIS LINE IS,

      SEISMIC CATEGORY II
      QUALITY CLASS II
      CODE GROUP D

   g. MSIV QUENCHERS AND DOWNCOMERS AS NOTED SHALL BE CLASSIFIED AS FOLLOWS:

      SEISMIC CATEGORY I
      QUALITY CLASS I

      CODE GROUP: B FOR MATERIAL FABRICATION AND INSTALLATION ONLY. CODE STAMP NOT REQUIRED.

8. ALL INSTRUMENT ROOT VALVES NOT LABELED WILL BE 3/4" GLOBE VALVES UNLESS SPECIFICALLY NOTED OTHERWISE.
9. EXCESS FLOW CHECK VALVES SHALL BE TAGGED AS FOLLOWS: PI-EFC-X (PENETRATION NO).
10. CONTAINMENT INSTRUMENTATION ROOT VALVES SHALL BE TAGGED AS FOLLOWS: PI-V-X (PENETRATION NO).
11. THESE INSTRUMENTS ARE LOCATED ON REMOTE SHUTDOWN PANEL.
12. ALL INSTRUMENTATION ON THIS DRAWING TO BE IDENTIFIED BY A PREFIX "MS" UNLESS OTHERWISE NOTED.
13. ALL INSTRUMENT LINES ARE DESIGNED BY CODE & LINE NUMBER.

   A) EXAMPLE: LINES ORIGINATING OUTSIDE CONTAINMENT,

   1/2"PI(1)-ST – (H22-P021)-A6
   CODE DESIGNATION — LINE NUMBER

   B) EXAMPLE: LINES ORIGINATING INSIDE CONTAINMENT,

   1/2"PI(1)-4S – X106
   CODE DESIGNATION — LINE NUMBER

   C) EXAMPLE: CONTINUATION OF THE LINE OUTSIDE CONTAINMENT IS DESIGNATED AS FOLLOWS, WITH LINE NUMBERS NOT SHOWN.

   1/2"PI(1)-4S – X106
   CODE DESIGNATION — LINE NUMBER

14. ASME CODE CASE N-241 MAY BE APPLIED TO 10" & 12"MS(18)-2 BELOW ELEVATION 466'-0 3/4".
15. CODE BREAK DEFINITIONS FOR THERMOWELLS ARE SHOWN ON MS10, "INSTALLATION OF THERMOWELLS & SAMPLE PROBES."
16. THIS EQUIPMENT IS NORMALLY CONTROLLED FROM THE MAIN CONTROL ROOM. IF THE MAIN CONTROL ROOM MUST BE VACATED, THIS CONTROL POINT MAY BE ISOLATED AND CONTROL TRANSFERRED TO THE REMOTE SHUTDOWN PANEL C61-P001.

(NOTES CONTINUED ON LEFT)

LEGEND

1. ALL VALVES (EXCEPT THOSE ON INSTRUMENT LINES) SUFFIXED WITH A (V) DENOTE A 3/4" VENT VALVE EXCEPT AS NOTED.
2. ALL VALVES (EXCEPT THOSE ON INSTRUMENT LINES) SUFFIXED WITH A (D) DENOTE A 3/4" DRAIN VALVE.
3. ALL VALVES SUFFIXED WITH A (TH) DENOTE A THROTTLED VALVE.

NOTES (CON'T):

17. THESE INSTRUMENTS ARE LOCATED ON THE ALTERNATE REMOTE SHUTDOWN PANEL E-CP-ARS.
18. VALVE PI-V-X106 IS A "DESIGNED OPEN VALVE" AND A WELDED FIXTURE HAS BEEN ADDED TO PREVENT CLOSING. TO CHANGE THIS DESIGNATION AND CLOSE THE VALVE IS CONSIDERED A PLANT MODIFICATION AND WILL REQUIRE A DESIGN CHANGE PER SWP-DES-01.
19. SEE DWG M501 FOR FLOW DIAGRAM LEGENDS, SYMBOLS AND ABBREVIATIONS.

REFERENCES TO CONTRACT NUMBERS, SUCH AS 215, 206, 220, FOUND IN THE NOTES ON THIS DRAWING REFER TO ORIGINAL CONSTRUCTION DESIGN REQUIREMENTS.

CURRENT DESIGN REQUIREMENTS ARE DOCUMENTED IN THE STATION DESIGN SPECIFICATIONS AND ACTIVE CONTRACT SPECIFICATIONS WHICH STILL APPLY.

FSAR FIG.

Columbia Generating Station
Final Safety Analysis Report

Main Steam Supply System Piping

Draw. No. M529 | Rev. 110 | Figure 10.3-2

10.4 OTHER FEATURES OF STEAM AND POWER CONVERSION SYSTEM

10.4.1 MAIN CONDENSER

10.4.1.1 Design Bases

The purpose of the main condenser is to provide a heat sink for condensing the turbine exhaust steam, turbine bypass steam, reactor feed pump drive turbine exhaust steam, and to provide a receiver for miscellaneous drains. It also provides deaeration, noncondensable gas removal, and storage of condensate, which is returned to the condensate system after a period of radioactive decay.

The main condenser is designed for the following conditions (approximate values):

a.	Duty	7.7 x 10^9 Btu/hr
b.	Circulating water flow	555,600 gpm
c.	Circulating water inlet temperatures	78°F
d.	Circulating water outlet temperatures	106°F
e.	Total steam condensed	8,128,700 lb/hr
f.	Total condensate outflow	15,017,000 lb/hr
g.	Outlet temperature of condensate	105.0°F
h.	Condenser pressure (triple)	2.4 in Hg abs (average)
i.	Cleanliness factor	85%
j.	Number of passes	1
k.	Air inleakage flow rate limit	50 scfm
l.	Hotwell storage capacity	163,000 gal

The main condenser is designed to accept a maximum of 25% of the rated reactor steam flow from the turbine bypass system (described in Section 10.4.4) plus 75% of the rated reactor steam flow through the turbine. This steam flow is accommodated without increasing the condenser backpressure to the turbine trip setpoint or exceeding the allowable turbine exhaust temperature.

The main condenser is designed to deaerate the condensate and provide an oxygen content in the hotwell condensate between 30-100 ppb per liter over the entire load range.

Feedwater quality is maintained by the condensate filter demineralizer system described in Section 10.4.6.

The condenser hotwell is designed to contain the condensate that is required during 5 minutes of full power operation of the turbine. Baffling in the hotwell provides a minimum of 3 minutes condensate hold-up time which permits the decay of short-lived radioactive isotopes.

Condenser construction is designed in accordance with requirements of the Heat Exchange Institute, Standards for Steam Surface Condensers (October 1971). Construction of condenser module bundle replacement is designed in accordance with the Tenth Edition.

The piping associated with the condenser is designed, fabricated, inspected, and erected in accordance with ANSI B31.1 (October 1971). Seismic category, safety class, and design codes are discussed in Section 3.2.

10.4.1.2 System Description

Steam from the low-pressure turbine is exhausted directly downward into the condenser shells through exhaust openings in the bottom of the turbine casings and is condensed. The condenser serves as a heat sink for several other flows, such as exhaust steam from the reactor feedwater pump turbines, cascading feedwater heater drains, air ejector condenser drains, gland seal steam condenser drain, feedwater heater shell operating vents, turbine gland seals, and the offgas preheater drains.

Other flows to the condenser originate from the startup vents of the condensate pumps, the reactor feedwater pumps, condensate booster pumps, the condensate pumps, feedwater line startup flushing, reactor feedwater pump turbine drains, low-point drains, condensate makeup, reactor water cleanup (RWCU), and feedwater heater dumps or drains. All high temperature drains into the condenser shell have impingement baffles or spray pipes to prevent the steam and entrained water particles from impinging on the surface of the tubes. Stainless steel lagging is provided where required to protect other condenser components. The bypass valves are described in Section 10.4.4.2.

During transient conditions, the condenser is designed to receive turbine bypass steam and feedwater heater and drain tank high-level discharges. The condenser is also designed to receive relief valve discharges from moisture separators, feedwater heater shells, steam seal regulators, and various steam supply lines.

The condenser is cooled by the circulating water system described in Section 10.4.5. Air inleakage and noncondensable gases are removed by the main condenser evacuation system described in Section 10.4.2.

Before leaving the condenser, the condensate is deaerated to reduce the level of dissolved oxygen.

10.4.1.3 Safety Evaluation

During operation, radioactive steam, gases, and condensate are present in the shell of the main condenser. The inventory of radioactive contaminants during operation is discussed in Section 12.2.1.2.2.7. Shielding for and controlled access to the main condenser is provided in

Chapter 12. The means of controlling and detecting the leakage of this radioactive inventory in and out of the main condenser is discussed in Sections 11.3 and 11.5.2.2.

Hydrogen is generated by radiolysis in the reactor and injected by the Hydrogen Water Chemistry system.

Hydrogen generation buildup during operation is prevented by continuous evacuation of the main condenser by the air removal system (see Section 10.4.2) and the offgas system (see Section 11.3.2). The radiolytic decomposition rate at rated power is 102 scfm of hydrogen and 51 scfm of oxygen. Hydrogen is introduced into the condensate/feedwater system to mitigate intergranular stress corrosion cracking (IGSCC). The addition of hydrogen into a feedwater system results in reduced radiolysis. The net hydrogen in the steam during Hydrogen Water Chemistry (HWC) is less than during normal water chemistry (NWC) (without hydrogen injection). During plant shutdown, there are no hydrogen sources to the condenser. Hydrogen injection is shut down whenever the reactor is shut down. The inadvertent introduction of hydrogen to condensate/feedwater, from HWC, during extended shutdowns is prevented by isolation of the hydrogen supply, and purging the hydrogen injection system with nitrogen.

The main condenser is not required for safe shutdown of the reactor and does not perform safety functions. However, degradation of the condenser in the form of a leak, loss of circulating water, or air ejector malfunction could lead to a loss of condenser vacuum which removes the effective ability of the condenser as a heat sink. As a consequence, loss of vacuum provides a main steam isolation valve closure signal. See Section 7.3.1.1.2 for a further description. Due to the distance of the main condenser from safety-related equipment areas, there will be no damage to necessary safe shutdown equipment from flooding caused by failure of the condenser.

Exhaust hood overheating protection is provided by sprays located downstream of the last-stage blades of the turbine.

Loss of main condenser vacuum causes the turbine to trip. Should the turbine stop valves, control valves, or bypass valves fail to close on loss of condenser vacuum, rupture diaphragms on each turbine exhaust connection to the condenser protect the condenser and turbine exhaust hoods against overpressurization. In this event, steam would exhaust to the turbine building.

The main condenser is constructed with titanium tubes and the tubesheet is titanium clad carbon steel. Corrosion protection of the wetted carbon steel water boxes, inlet and outlet valves, and circulating water piping is being performed by a combination of a high quality coating, the use of stainless steels, and sacrifical anodes. The sacrifical anodes attach to the wall of the water boxes and will provide protection in case of any coating breaches or coating failure. All small bore nozzles on the circulating water side penetrating the water box 4 inches and less are of stainless steel. The water box coating will wrap into these connections to

prevent any carbon steel exposure. Isolation kits will electrically isolate any attached drain piping to help minimize any stray current corrosion.

10.4.1.4 Tests and Inspections

The condenser shell received a field hydrostatic test prior to initial operation. This test consisted of filling the condenser shell with water, and inspecting the entire tube sheet and shell welds and surfaces for visible leakage and/or excessive deflection.

The condenser module bundle replacement final test for tube or joint leakage was performed using a vacuum-bubble leak test.

During normal plant operation, the following parameters are routinely monitored:

a. Condenser vacuum,
b. Conductivity, and
c. Condensate temperature.

Any divergence from established limits for these parameters requires an investigation and testing as necessary to determine the extent of the divergence and correct the problem.

10.4.1.5 Instrumentation

The condenser shell is provided with local and remote hotwell level and pressure indication. The remote indication is by means of indicators and alarms in the main control room. The condensate level in the condenser hotwell is maintained within proper limits by automatic controls that provide for transfer of condensate to and from the condensate storage tanks as needed to satisfy the requirements of the steam system. Condensate temperature is measured in the outlet line of the condensate pumps.

Turbine exhaust hood temperature is monitored and controlled with water sprays to provide protection from exhaust hood overheating.

A main condenser low vacuum alarm is provided. Automatic turbine trip is activated on continued loss of main condenser vacuum followed by main steam isolation valve closure on further degradation of condenser vacuum. See Section 7.3.1.1.2 for a further description of main steam isolation.

Water box pressure and temperature measurements are provided.

Circulating water inleakage to the main condenser is monitored by conductivity elements located in the tube sheet troughs, in the condenser outlet line, and at the condensate pump discharge line (alarm in the main control room). Conductivity of the condensate demineralizer

influent is monitored and alarmed in the radwaste control room. A conductivity/chemical species sampling and measurement system is available for characterizing inleakage. Leakage is controlled (prevented) to the extent possible by maintaining chemistry control in the circulating water to provide optimization between scale formation and corrosion. Tube leakage can be corrected by isolating and draining the tube sections containing leaking tubes and then locating and plugging the leaking tube.

10.4.2 MAIN CONDENSER EVACUATION SYSTEM

10.4.2.1 Design Bases

The main condenser evacuation system removes gases from the turbine generator, the reactor feedwater pump turbines, and the main condenser during plant startup and maintains the condenser essentially free of noncondensable gases during operation. This system handles all noncondensable gases which may enter the main turbine and reactor feed pump turbines through their seals, the condensate piping, or which is generated by dissociation of water in the reactor. The main condenser evacuation system discharges to the offgas system through the steam jet air ejectors during normal operation (see Section 11.3).

The piping system associated with the main condenser evacuation system is designed, fabricated, and erected in accordance with ANSI B31.1 (October 1971). The air removal equipment is designed in accordance with the standards for Steam Surface Condensers, published by the Heat Exchange Institute (October 1971).

10.4.2.2 System Description

The main condenser evacuation system includes, for normal operation, two 100%-capacity steam jet air ejector units. Each unit consists of a twin-element first-stage steam jet air ejector and a single-element second-stage, steam jet air ejector which discharges to the offgas system. The capacity of each steam jet air ejector unit is 663 scfm at 70°F total equivalent of mixed gases and vapor at 1-in. Hg absolute. The main condenser design air inleakage flow rate is 50 scfm.

Two mechanical vacuum pumps are provided for hogging operation during startup (see Figure 10.4-1). During startup, both mechanical vacuum pumps can be used to rapidly remove air and noncondensable gases from the main condenser.

The discharge from the vacuum pumps is routed with the gland seal steam exhauster discharge to the reactor building elevated release duct. Because the reactor power is low, a minimal amount of activity is discharged to the environment. A radiation detector monitors the discharge and isolates the vacuum pumps when the radiation level exceeds established limits. The vacuum pumps operate until sufficient steam pressure is available to start the steam jet air ejector.

The source of steam to operate the steam jet air ejector is taken from the main steam header branch line, with steam pressure being regulated by the steam jet air ejector control valves. Air inleakage, noncondensable gases, as well as entrained water vapor, are removed from the main condenser by the first stage of the steam jet air ejector. The gas-vapor mixture is then discharged into the ejector condenser where the vapor is condensed. The resulting condensate is drained back to the main condenser via a loop seal. The ejector condenser is cooled by the condensate discharge from the condensate pumps. The noncondensing second stage of the steam jet air ejector removes the noncondensable gases and some entrained vapor from the ejector condenser and exhausts them to the offgas system (see Section 11.3). The offgas system processes the noncondensable gases and limits the release of radioactive gases to the environment.

10.4.2.3 Safety Evaluation

The main condenser evacuation system is not safety related. Consequently, the system is not designed to Seismic Category I requirements. Safety class and design codes are presented in Section 3.2.

The radionuclides in the effluent from the steam jet air ejector unit have been evaluated in Section 11.3.

The offgas from the main condenser contains hydrogen gas from dissociation of water in the reactor and from hydrogen injection. In the second-stage steam jet air ejector, sufficient steam is provided to dilute the hydrogen content to less than 4% by volume to keep the mixture below flammability limits.

10.4.2.4 Tests and Inspections

The mechanical vacuum pumps and the steam jet air ejectors were cleaned, inspected, and tested at the vendors' plant. System preoperational tests as described in Chapter 14 were successfully performed after installation. Main condenser evacuation system monitoring during normal operation along with routine maintenance and inspection ensures proper functioning and performance in accordance with its design bases. Instrumentation permits the operators to monitor system performance during operation.

10.4.2.5 Instrumentation

A radiation monitor is installed in the air removal piping discharge to the reactor building elevated release duct (a common exhaust line to the mechanical vacuum pumps and the gland seal steam condenser exhaust). A high-radiation signal from the monitor will trip both mechanical vacuum pump motors: The trip causes the suction and discharge valves to close and trips the mechanical vacuum pump seal water pumps. The vacuum pump is equipped with instrumentation to ensure proper operation (Figure 10.4-1).

A main steam line radiation monitor (MSLRM) high-radiation signal also trips both mechanical vacuum pump motors. The signal will also trip both gland seal steam condenser exhauster motors (see Section 11.5.2.1.1).

Low steam flow to the second-stage air ejector causes a signal to close the inlet gas valves to the first-stage air ejector. Steam pressure indicators for the first- and second-stage ejectors and a steam flow indicator for the second-stage ejector are provided in the main control room.

10.4.3 TURBINE GLAND SEALING SYSTEM

10.4.3.1 Design Bases

a. The turbine gland sealing system prevents air leakage into, or radioactive steam leakage out of, the main turbine and reactor feedwater pump turbines; and

b. The turbine gland sealing system is designed to provide nonradioactive (clean) sealing steam, at all loads, to the turbine shaft glands and valve stems (main stop, control reheat stop, intercept, and bypass valves). The condensate from the gland seal steam condenser is returned to the main condenser, and the noncondensable gases (inleaking air) are exhausted to the reactor building elevated release duct.

The turbine gland sealing system is in strict conformance with the latest edition in effect at the time of fabrication of the applicable ANSI, ASME, and IEEE standards. The major portion of manufacture was performed during 1975. The gland seal steam evaporators are designed, fabricated, inspected, tested, and stamped in accordance with Section VIII of the ASME Boiler and Pressure Vessel (B&PV) Code and the Standards of the Tubular Exchanger Manufacturers Association, Class R (May 1972). Seismic category, safety class, and design codes are provided in Section 3.2.

10.4.3.2 System Description

The turbine gland sealing system consists of two 100%-capacity gland seal steam evaporators, seal steam pressure regulators, seal steam header, gland seal steam condenser, exhauster blowers, and the associated piping, valves, and instrumentation (see Figures 10.3-1 and 10.4-2). Sealing steam for turbine shaft seal glands and valve stem seal glands (stop, control, reheat stop, intercept, and bypass valves) is supplied from the seal steam header at 200 psig. The source of sealing steam is from the gland seal steam evaporators or the auxiliary steam boiler. The sealing steam is produced in an evaporator which is heated by extraction steam taken from the high pressure turbine. The condensate fed to the evaporator is taken from the suction header of the reactor feedwater pumps in the feedwater system. During startup and low load operations, a branch line taken off the main steam header supplies the necessary heating steam for the evaporator.

Separate seal steam regulators are provided to regulate the pressure of sealing steam for the high pressure turbine, each low pressure turbine, each reactor feed pump turbine shaft seal, the bypass valve assembly, and the main stop and control valve assembly stems.

Since the low pressure (LP) turbine and reactor feedwater pump turbine exhaust pressures are at a vacuum, sufficient sealing steam is supplied to maintain positive pressure in the glands to prevent air inleakage along the shaft. The high pressure (HP) turbine exhaust pressure varies with load and is approximately 177 psia at its maximum. The system is designed to maintain the seal steam supply to the HP turbine glands at a pressure of 16 to 20 psi above HP turbine exhaust to prevent HP turbine exhaust steam leakage through the shaft gland seal.

The main stop, control, and bypass valve stems are provided with an intermediate zone to which sealing steam is supplied. This nonradioactive steam leaks in both directions, towards the HP stem leakoff and towards the LP stem leakoff. The HP stem leakoff contains radioactive steam and is directed to an LP feedwater heater. The LP steam leakoff is nonradioactive and is sent to the gland seal steam condenser. The reheat stop and intercept valve stems are supplied with sealing steam at a pressure greater than the crossover pressure so that any leakage that occurs is into the crossover pipes.

The reactor feedwater pump turbines at the high pressure end are provided with sealing steam at an intermediate point in the turbine gland seal. This nonradioactive steam leaks in both directions, towards the HP end leakoff and towards the LP end leakoff. The HP leakoff contains radioactive steam and is directed to the sixth stage of the turbine. The LP steam leakoff is nonradioactive and is sent to the gland seal steam condenser. Sealing steam for the reactor feed pump turbine LP stop valve, HP stop valve, and control valve is provided in a similar manner.

The outer leakoff of all glands is routed to the gland seal steam condenser which is maintained at a slight vacuum by the exhauster blower. During plant operation, the gland seal steam condenser and one motor-driven blower is in operation. The exhauster blower discharges gland air inleakage to the atmosphere via the reactor building elevated release duct. The gland seal steam condenser is cooled by the main condensate flow.

The steam evaporator is a shell-and-tube heat exchanger designed to provide a continuous supply of clean sealing steam to the seal steam header.

10.4.3.3 Safety Evaluation

The turbine gland sealing system is not safety related.

A supply of clean steam is always available from either of two 100%-capacity steam evaporators or the auxiliary steam boiler. Should the steam packing exhauster fail to function,

the sealing steam would continue to flow into the turbine and would be the only steam that could flow out of the glands and into the turbine building. Therefore, no reactor steam would be released to the environment.

A radiation monitor in the discharge of the blower alerts the operator to tube ruptures in the gland seal steam evaporator or other system malfunctions. Sealing system radioactive releases are discussed in Section 11.3.

Relief valves in the seal steam system prevent excessive steam pressure. The valves vent to the condenser and atmosphere.

10.4.3.4 Tests and Inspection

Prior to installation at the site, the gland seal steam evaporator and gland seal steam condensers were cleaned, inspected, and tested at the vendor's plant. Preoperational testing of this equipment included a hydrostatic test for visual inspection of welded joints to confirm leaktightness. The turbine gland sealing system is regularly inspected and monitored during operation to ensure proper functioning and performance in accordance with its design bases.

10.4.3.5 Instrumentation

The level in both the shell and tube sides of the steam evaporator are controlled by level-control valves: the condensate (shell) side by maintaining the water level surrounding the tubes and the steam side by maintaining the water level in the steam evaporator drain tank. The flow of heating steam is regulated by the steam pressure control valve.

Liquid level in the gland seal steam condenser is maintained by a trap connected to the main condenser. A local pressure indicator and high-level alarm switch are provided on the gland seal steam condenser. Temperature and pressure gauges and test points are provided to monitor operation and testing of the system. Instruments for monitoring system operation are provided in the main control room. Low and high level alarms are provided on the gland seal steam evaporator.

10.4.4 TURBINE BYPASS SYSTEM

10.4.4.1 Design Bases

a. The turbine bypass system controls reactor steam pressure by sending excess steam flow directly to the main condenser. This permits independent control of reactor pressure and power during reactor vessel heatup to rated pressure prior to and while the turbine is brought up to speed and synchronized under turbine speed-load control and when cooling down the reactor. Following main turbine generator trips and during power operation when the reactor steam generation

exceeds the transient turbine steam requirements, the turbine bypass controls reactor overpressure within its capacity and in accordance with the steam generation rate;

b. The turbine bypass system capacity is 25% of rated reactor steam flow. The bypass system can accommodate a 25% turbine load rejection without causing a significant change in reactor steam flow; and

c. The turbine bypass valves are capable of remote manual operation.

10.4.4.2 System Description

The turbine bypass system consists of four hydraulically operated control valves which are mounted on a valve manifold (see Figure 10.4-3). They are connected to the main steam line header upstream of the turbine main stop valves by four 10 in. lines. The four individual valves lower the pressure of the steam by reducing its flow velocity before it enters the condenser system.

Each valve outlet discharges into the manifold which is piped directly to pressure-reducing perforated pipes located in the condenser shell (see Figure 10.3-1).

The turbine DEH control system is designed to prevent spurious or unnecessary opening of the bypass valves, due to control signal noise or minor transients. The four valves in the manifold are operated automatically by the control system. The amount of steam flow allowed to pass through the turbine is limited by the DEH control system demand signal, which limits the amount that the governor valves can open. The DEH control system controls the governor valve position to maintain reactor pressure. When the governor valve opening position, required to maintain reactor pressure, exceeds the load demand limit, a signal is sent to the bypass valves to open to maintain reactor pressure. The bypass valves automatically trip closed whenever the vacuum in the main condenser is greater than approximately 23 in. Hg absolute. They have regulation capability and a fast-opening response approximately equivalent to the fast closure of the turbine stop and control valves.

The turbine bypass system piping and valves are designed to the class and seismic category presented in Table 3.2-1. The valve body is forged carbon steel while the internals are stainless steel. The environmental design bases for this system are contained in Section 3.11.

Each valve is sized for 8% of the total rated flow; however, all four valves are designed for 25% of the total flow. If the bypass system capacity is exceeded, the main steam relief valves open on high reactor pressure and excess steam is vented to the suppression pool.

10.4.4.3 Safety Evaluation

The effects of a malfunction of the turbine bypass system valves and the effects of such failures on other systems and components are evaluated in Section 15.2.2.

All safety-related components and the turbine speed control system are located remote from the turbine bypass piping and valves. The bypass system is located on the second floor of the turbine building (see Figure 1.2-3) and the speed control and safety-related components are located on the floor above, thus being separated by a concrete floor and wall making any adverse affects from a high-energy line failure in the turbine bypass system extremely unlikely. The turbine overspeed protection system is a fail-safe design, as described in Section 10.2.2.

The effects of a steam line break on the safety-related components in the turbine building are discussed in Section 3.6.1.

10.4.4.4 Tests and Inspections

The opening and closing of the turbine bypass system valves were checked during initial startup and shutdown for performance and timing. The bypass steam lines upstream of the bypass valves to MS-V-146 were hydrostatically tested to confirm leaktightness. Radiography and visual inspection of all pipe weld joints were performed on this piping. The branch connections and branch lines of this piping were examined in accordance with ANSI B31.1 rules.

Each turbine bypass valve can be tested independently and remotely during plant operation. The testing is conducted as required by the Technical Specifications.

10.4.4.5 Instrumentation

The controls and valves are designed so that the bypass valves shut on loss of control system electric power or hydraulic pressure. For testing the bypass valves during operation, the stroke time of the individual valves is increased during testing to limit the rate of bypass flow increase and decrease to approximately 1% per sec of reactor rated flow. Upon turbine trip or generator load rejection, the start of bypass steam flow is not delayed more than 0.1 sec after the start of the stop valve or the control valve fast closure motion. A minimum of 80% of the rated bypass capacity is established within 0.3 sec after the start of the stop valve or the control valve closure motion. For more detail refer to Section 7.7.1.5.

10.4.5 CIRCULATING WATER SYSTEM

10.4.5.1 Design Bases

The circulating water system is designed to provide cooling water for the condenser using the atmosphere as a heat sink via six circular mechanical-induced draft cooling towers designed to remove 7.962 x 10^9 Btu/hr from the circulating water. The design heat gain in the condenser is approximately 7.7 x 10^9 Btu/hr. In addition, the cooling towers have the capacity to cool the plant service water during normal operation and the standby service water during shutdown operation. The operation of the towers is not essential to the safety of the plant.

Makeup for tower evaporation, wind loss, and blowdown is obtained from the Columbia River by makeup pumps. Cooled blowdown from the cooling towers is discharged to the river.

Chemical treatment is provided for the circulating water system to preclude scale, biological growth, and consequent fouling of heat transfer surfaces.

The piping system associated with the circulating water system is designed, fabricated, inspected, and erected in accordance with ANSI B31.1 (October 1973) and AWWA C201. Major piping components are fabricated from carbon steel. Seismic category, safety classification and design codes are given in Section 3.2.

10.4.5.2 System Description

The circulating water system is shown schematically in Figure 10.4-4. The circulating water system is a closed cycle cooling system using six mechanical induced draft, cross-flow cooling towers. Three circulating water pumps, each having a total head of 95 ft at 186,000 gpm, are provided. These pumps, located in the circulating water pump house, take suction from a common intake plenum and discharge through a common 12-ft-diameter pipe to the three waterboxes of the single-pass triple-pressure zone condenser. The water from the condenser is returned to the cooling towers, cooled, and collected in the cooling tower basins which supply the circulating water pumps intake plenum.

In addition, as part of the cooling tower piping, a cooling tower bypass is provided for plant startup during the winter to prevent icing conditions at the towers. Inlet motor-operated valves are provided at each tower to isolate a tower for maintenance.

The towers are designed such that the buildup of ice will not restrict air flow through the louvers. Temperature range and low water temperature limits are maintained during reduced heat loads by shutting down individual towers (fans and flow) as required. In extreme cold weather, desired cold water temperatures can be achieved with all fan motors shut down but free to rotate with natural draft through the towers.

The six mechanical draft cooling towers are located such that there can be no physical interaction between them and plant structures important to safety in the unlikely event of a tower collapse.

The quantity of makeup water to the system is dependent upon cooling tower evaporation, drift losses, and system blowdown requirements. The system blowdown quantity is dependent on the concentration of dissolved solids allowed in the circulating water. The concentration of dissolved solids varies with operating status and the cycles of concentration which are controlled by operation of the blowdown valve. Makeup to the circulating water system is provided via the cooling tower makeup pumps located in a pump house adjacent to the Columbia River. The makeup pumps are designed to pump 12,500 gpm each with a TDH of 204 ft; the makeup flow can be directed into the circulating water bay or to one or both of the plant service water pump suctions by means of a weir box and sluice gate arrangement located in the circulating water inlet bay.

The evaporative-type cooling towers have the potential for creating visible plumes of water vapor under certain atmospheric conditions. The cooling tower system is designed to keep this environmental impact minimal. The cooling tower plumes rarely produce ground level fog or ice in the basin area where the plant is located and do not restrict traffic at the local airports. Since fogging occurs naturally in the area, the estimated incremental occurrences of fog attributable to cooling tower operations are small compared to the natural occurrences.

Cooling tower drift has been identified as a cause of arcing in switchyard equipment. Switchyard equipment is monitored and cleaned (as necessary) to preclude this phenomenon. Offsite environmental effects are monitored per Section 4.2.1 of the Environmental Protection Plan.

The radiological impact and the impact of thermal discharges on the environment are insignificant. The effect of cooling tower blowdown has no significant effect on the Columbia River temperature, and the environmental effect of chemical discharges is considered negligible. The system has no measurable effect on area groundwater.

The environmental considerations mentioned above are discussed in detail in Chapter 5 of the Environmental Report - Operating License Stage.

10.4.5.3 Safety Evaluation

The circulating water system is a non-safety-related system. Consequently, the circulating water system is not designed to Seismic Category I requirements. See Section 9.2.5 for a description of the ultimate heat sink which is designed to perform safety-related functions.

The condenser design ensures that the pressure on the tube side is always maintained higher than the pressure on the shell side, thus eliminating leakage into the circulating water system

should tube failure occur. Consequently, the design of the circulating water system precludes radioactive leakage into the system. Chemicals used to treat the CW system to preclude scale and biological growth and to control pH are evaluated in accordance with administrative controls to ensure compatibility with systems and components.

Two evaluations were performed to determine the effects of a postulated failure in the circulating water system inside the turbine building: a "realistic evaluation" and a bounding evaluation. For the "realistic evaluation," a moderate energy crack was postulated to occur in the circulating water system barriers (e.g., the rubber expansion joints) at the inlet to the main condenser. The inlet side was selected because it yields the severest results. For the bounding evaluation, a complete circumferential expansion joint break was assumed.

The entire condenser area is drained by means of sumps (see Figure 9.3-9), each equipped with duplex pumps. Sumps T-2 and T-3, servicing the inlet and outlet of the condenser, each have 50 gpm pumps. Each of these sumps is equipped with a level alarm and is therefore capable of detecting a circulating water system barrier failure. The level alarm will annunciate in the main control room upon reaching high level, providing a means of detecting the postulated failure within 5 minutes.

"Realistic" Break

The crack area for this postulated failure was assumed to be equal to one-half the pipe diameter times one-half the pipe wall thickness.

$$A = \frac{d}{2} x \frac{t}{2}$$ (see Section 3.6.2.1.4.2)

The flow exiting from such a crack would be an orifice flow. The head at expansion joint for normal three-pump operation at 186,000 gpm each was determined (from system energy gradients) to be 90 ft. The flow for these conditions was calculated to be

$$Q = 1737 \text{ gpm}$$

The system has different operating pressures for the various modes of pump operation. The piping was designed for an internal pressure of 60 psig, which is well above the design energy gradient.

The motor-operated inlet and outlet valves at the condenser are designed and manufactured to close in 60 sec to avoid excessive pressures caused by fast valve closure. Therefore, rapid valve closure is not a consideration. After closure of the inlet and outlet valves, however, the system will be operating with two-thirds of the condenser capacity. With three circulating water pumps in operation and two sections of the condenser in operation, the system flow as determined from the pump operating point diagram will be approximately 450,000 gpm.

Comparing the system energy gradients for this mode of operation to that when all three condenser units are in operation, the resultant difference in pressures will be

a. At the inlet side, an increase of approximately 4.3 ft of head (2 psi) occurs,
b. At the outlet side, a decrease of approximately 5.2 ft of head (2 psi) occurs.

Detection of the postulated failure will occur within 5 minutes, as described above, by the annunciation in the control room of the sump high level alarm. It is assumed that there will be a 15-minute time allowance for an operator in the control room to check the circulating water system barriers and close both the inlet and outlet valves of one unit of the condenser as may be required. This closure is accomplished by the activation of a remote manual switch in the control room, and therefore no control circuitry time delays nor coastdown times are involved. Flow will continue, however, after valve closure for about 106 minutes at a decreasing rate, until the remaining water from the condenser is completely discharged.

In the first 5 minutes after a crack, 8435 gal of water will spill into the inlet basin. The capacity of each basin and its capability to store excess flow were calculated to be as follows:

a. Inlet basin: 22,500 gal from el. 436 to el. 441,
b. Outlet basin: 27,500 gal from el. 436 to el. 441, and
c. Net volume under condenser: 180,500 gal from el. 433 to el. 441.

The time required to fill the inlet basin, after a postulated crack occurs, is computed to be 13.3 minutes. This includes the 50-gpm outflow from the sump pump. The circulating water leakage flow will continue for 6.7 minutes after filling the inlet basin, until reaching the total estimated shutoff time of 20 minutes. It can be assumed that 10% of this water will flow out over the floor at el. 441, and the remainder, about 10,170 gal, will flow into the condenser basin area. During this same time period, four sump pumps in the condenser basin area will have alternately pumped out 670 gal, leaving 9500 gal or 0.42 ft of water in the condenser basin. The rate of rise of water, therefore, is 0.021 ft/minute during the first 20 minutes after the postulated crack occurs. Note that on the high sump level, both pumps run simultaneously rather than alternately, thus doubling the calculated outflow capacity.

After the valves are closed, the water contained in the condenser unit water box will continue to discharge to the area. The quantity of water remaining is estimated to be 87,000 gal. The flow will vary with a diminishing head, the head going from about 25 ft to 0 ft. Using a 20-ft head and the same orifice flow criteria, the rate of flow will be approximately 819 gpm, discharging the remaining water in about 106 minutes. There will be an outflow from all the sump pumps of 150 gpm, with 10% of the flow from the crack again assumed to flow out over the floor. The water will accumulate in the condenser basin at about 590 gpm. After 106 minutes, the water level in this basin will rise an additional 2.77 ft, at 0.0261 ft/minute. The total height of water when the discharge has stopped is therefore 3.19 ft to el. 436.19.

This elevation is 5 ft below the floor level of the turbine building (el. 441), thus there will be no impacts on safety-related equipment from this event.

Boundary Evaluation

A complete circumferential expansion joint break in the circulating water system would result in the release of large amounts of water into the turbine generator building. The water would fill the net volume under the condenser, tripping the sump high level alarms that annunciate in the main control room. Remote-manual operation of the circulating water pumps and butterfly valves is provided in the main control room to mitigate the accident.

Disregarding operator action, however, the following evaluation is provided. Water would spill across the grade level floor of the turbine generator building at el. 441 ft, exiting through the railroad bay and access doors. Water could flow into the reactor building stairwells and elevator shafts from 441-ft el. down to the 422-ft 3-in. el., eventually filling the stairwells and elevator shafts with water. There is no safe shutdown equipment located in the stairwells or elevator shafts. The access doors to the emergency core cooling system (ECCS) and RCIC/CRD pump rooms at el. 422 ft 3 in. are designed to withstand a static head of approximately 44 ft (measured from centerline of door) of water. All penetrations into the reactor building below the 466 ft el. are designed to minimize flooding effects. Flooding will not affect any required safe shutdown equipment in the reactor building.

Water could also spill across the grade level floor into the radwaste/control building. The basement level of this building is 437 ft. It is thus possible to flood this level with 4 ft of water before the water would exit at grade level (441 ft) through access doors. No safety-related components will be affected by this flooding. The railroad bay and access doors of the turbine generator building are not watertight and are not designed to withstand any static head of water; therefore, no significant depth of water could accumulate in the turbine generator building. All safety-related equipment in the turbine generator building is located above the 471-ft el. and would not be affected.

In conclusion, a complete circumferential expansion joint break in the circulating water system inside the turbine generator building would have no effect on safety-related equipment in the turbine generator building and no effect on safe shutdown equipment in the reactor building.

Discharge operation of water accumulated under the condenser shall be performed in accordance with radioactivity checking requirements for sump discharges.

10.4.5.4 Tests and Inspections

All system components, except the condenser, are accessible during operation and may be inspected visually. The circulating water pumps were tested during preoperational testing.

The condenser was field hydrostatically tested in accordance with the Steam Surface Condenser Standards published by the Heat Exchange Institute.

All major components were inspected and cleaned prior to installation in the system, and preoperational tests were performed after system installation.

Sampling stations and test connections are provided to allow inservice testing during operation of the system.

10.4.5.5 Instrumentation

The circulating water pumps are individually equipped with shutoff valves that are interlocked with their respective pump motors to prevent startup unless the valve is closed and to prevent shutdown unless the valve is less than 15% open. Isolation valves are provided at the inlets of each condenser shell, which enable any water box to be isolated. The isolation valves are equipped with limit switches and are operated by manual switches located in the main control room. The system is monitored for temperature, pressure, level, and pH.

10.4.6 CONDENSATE FILTER DEMINERALIZER SYSTEM

10.4.6.1 Design Bases

The condensate filter demineralizer rated system capacity is 32,000 gpm, which is in excess of the 100% system capacity of 31,000 gpm.

As a design basis for this system, the effluent water quality is as follows:

NORMAL OPERATION FEEDWATER QUALITY TO THE REACTOR [a]

Parameter Frequency	*Limit*	*Sample*
Conductivity	*0.1 μmho/cm at 25°C* [b]	*Continuous*
pH	*6.5 to 7.5 at 25°C*	*As Required*
Total Metallic Impurity Filter Sample	*15 parts per billion (ppb)*	*Weekly; collected continuously*
Total Copper (Cu)	*2 ppb*	*Weekly*
Total Iron	*5 ppb*	*Weekly*

[a] *Measure after the last feedwater heater unless noted.*
[b] *Measured at demineralizer outlet.*

Nickel (Ni)	*2 ppb*	*Weekly*
Total Silica (SiO_2)	*5 ppb*	*As Required*
Chloride (Cl)	*10 ppb* [c]	*Daily*
Oxygen	*20 to 200 ppb*	*Continuous*

The design basis effluent water quality and sampling frequency was originally specified based on vendor fuel warranty and regulatory guidance. Since that time, enhanced analytical and testing techniques have determined that considerably lower concentrations of impurities can cause damage to system components. Through industry sponsored research, guidelines that are much more restrictive than the original design specifications have been developed and adopted. The implementation and documentation of these more restrictive specifications is controlled by chemistry administrative procedures.

This results in the system being designed to maintain feedwater quality such that the reactor water limits are not exceeded. This is achieved by the following:

a. Operation of the system to a less than 0.065 µS/cm conductivity end-point. After reaching this limit during normal operating conditions, the filter-demineralizer(s) are taken off line, backwashed, and precoated;

b. Establishing metallic impurity limits to preserved fuel performance by controlling the amount available for deposition on heat transfer and fluid transport surfaces. In addition, controlling corrosion product input minimizes the radiological impact from corrosion product activation, transport, and deposition;

c. Controlling undesirable anionic (chloride and sulfate) impurity input to maintain the reactor coolant concentrations below the levels where stress corrosion cracking is induced; and

d. Control of feedwater dissolved oxygen levels between 20 and 200 ppb falls in the minimal portion of the combined generalized and pitting corrosion curve for carbon steel piping. Piping is preserved and corrosion product activation, transport, and deposition are restricted.

This ensures that in conjunction with the RWCU system, reactor water quality will be maintained.

[c] *Or 25% of influent level, whichever is lower, to maintain reactor water quality of 200 ppb at rated operating pressure.*

The condensate filter-demineralizers are designed, fabricated, tested, and stamped in accordance with the ASME B&PV Code Section VIII, Division 1 (November 1971). Seismic category, safety class, and design codes are presented in Section 3.2.

10.4.6.2 System Description

The condensate filter demineralizer system consists of the necessary piping, valves, appurtenances, and instrumentation to control the condensate impurity concentration during plant operation (see Figure 10.4-5).

Six filter demineralizers are provided to polish 100% of the condensate flow: five or six are normally in operation at full power. The six filter demineralizers and associated piping, valves, and instrumentation are similar and piped in parallel.

Each filter demineralizer has an associated hold pump which is brought into service during low flow conditions to recirculate condensate through the filter demineralizer and hold the precoat material on the filter elements.

The individual effluent lines from the filter demineralizer vessels are provided with resin traps to prevent passage of ion exchange resins to the feedwater system.

The system design incorporates the following service systems which are common to all filter demineralizers:

a. Chemical mixing and supply system to circulate a chemical cleaning solution (e.g., inhibited citric acid) for the purpose of cleaning the filter demineralizer units and directing the waste to the chemical waste system (this system is not normally used);

b. A backwash system to remove the spent resin from the filter demineralizers and direct the radioactive waste to the backwash receiving tank (for further discussion of the backwash system discharge to the liquid waste management system, see Section 11.2); and

c. A precoat system wherein fresh precoat material is prepared and then circulated through the filter demineralizers to coat the filter elements.

The system control panels are located outside the equipment areas to permit remote operation of the condensate filter demineralizers without requiring the operator to enter high radiation areas.

The control panel has a graphic display. All major isolation valves, position indicators, and instrumentation are displayed at their respective locations.

10.4.6.3 Safety Evaluation

The condensate filter demineralizer system removes corrosion products, condenser inleakage impurities, and impurities present in the condensed steam.

Purified condensate and feedwater limits ensure sustained, safe plant operation by preserving the integrity of nuclear steam supply system components, vessel internals, fuel, and transport piping.

Due to improved water quality limits, any appreciable circulating water inleakage would result in water chemistry conditions outside acceptable limits and require action(s) to return the water quality to within applicable limits for continued plant operation.

Compliance with Regulatory Guide 1.56 is discussed in Section 1.8.

10.4.6.4 Tests and Inspections

The original condensate filter demineralizers, precoat and chemical mixing tanks, holding pumps, and system valves were hydrostatically tested prior to shipment by the manufacturer.

Field tests were performed after equipment installation to check satisfactory operation and functioning of control equipment, as well as to demonstrate guarantee performance. The guarantee performance test was governed by the ASTM Testing Method Procedures for High Purity Industrial Water.

10.4.6.5 Instrumentation

Instrumentation is provided for the condensate filter demineralizer system for proper operation, control, and protection against malfunction of the equipment.

The system design includes automatic flow balancing control for each filter demineralizer to maintain equal flow through each of the operating vessels by regulating the effluent discharge valve. The filter demineralizer flows are normally balanced manually and routinely monitored to maintain adequate flow balance. The cumulative flow through each filter demineralizer is recorded. Conductivity elements downstream of the flow control valves measure and record demineralizer performance. Differential pressure and conductivity alarms for each filter demineralizer annunciate when the pressure differential across a unit reaches a predetermined value or when the effluent conductivity indicates a significant reduction in ion exchange capacity. System influent and effluent conductivity are monitored and recorded. Alarms are provided for individual demineralizer differential pressures and outlet conductivities, and for the system inlet and outlet conductivities. These alarms annunciate at predetermined levels and

corrective action is initiated in accordance with plant procedures and licensee controlled specifications.

Conductivity instrumentation is calibrated in accordance with applicable ASTM Procedures.

An automatic bypass maintains the condensate system flow in the event the number of filter demineralizers in operation or the flow capacity of the units (due to clogging) is inadequate to handle the required flow.

The resin replacement equipment is designed for semiautomatic operation. A remote manual override is included as an alternate mode of operation.

Conductivity recorders, a grab sample rack with the necessary instrumentation and appurtenances to test influent and effluent condensate, differential pressure monitors, pressure indicators, and local alarms are provided for each unit in addition to the main graphic display control panel.

10.4.6.6 Demineralizer Resins

Compliance with Regulatory Guide 1.56 is discussed in Section 1.8.

Pressure precoat filter/demineralizer media on individual vessels is replaced on a cyclic basis when the pressure drop exceeds 25 psid or the effluent conductivity exceeds 0.065 µS/cm during normal operating conditions. The conductivity limitation does not apply when condenser vacuum is broken and during the period when condenser vacuum is being restored.

10.4.6.7 Water Chemistry Analyses

The filter-demineralizer condition during normal power operation is assessed by the effluent conductivity and ionic content. The influent conductivity is related to impurity concentration through the equivalent conductance of the constituents of the process fluid.

Chemical analysis methods used for determination of conductivity and ionic content are as follows:

Conductivity	Measured in accordance to ASTM-D-1125
Chloride	Determined by ion chromatography in accordance with the vendor's operating manual.

10.4.7 CONDENSATE AND FEEDWATER SYSTEMS

10.4.7.1 Design Bases

The condensate and feedwater system provides a reliable source of high purity feedwater during both normal operation and anticipated transient conditions. The system is designed with sufficient capacity to provide for 110% of the feedwater flow at rated load. This provides sufficient margin to provide flow under anticipated transient conditions. The feedwater heaters are designed to provide the required temperature of feedwater to the reactor. The final feedwater temperature is 423°F at rated load.

The condensate and feedwater system is designed and fabricated in accordance with ANSI B31.1, (October 1973) and ASME B&PV Code, Section VIII, Pressure Vessels (November 1971) and 2004 ASME B&PV Code, Section VIII, including 2005 Addenda for RFW-HX-6A and RFW-HX-6B. Seismic category and safety class are discussed in Section 3.2. The environmental design bases for this system are in Section 3.11.

10.4.7.2 System Description

The condensate and feedwater system shown in Figure 10.4-6 is a six-heater regenerative feedwater heating cycle. The extraction steam system supplying heating steam to each feedwater heater is shown in Figure 10.4-7. A discussion of the condensate supply system is presented in Section 9.2.6.

Feedwater heaters 1, 2, 3, and 4 are divided into three one-third capacity parallel trains; heaters number 5 and 6 are split into two one-half capacity parallel strings. The final feedwater temperature is approximately 423°F at design output. Tube material for RFW-HX-6A and RFW-HX-6B is type 316 stainless steel. For the rest of the heaters the tubes are type 304 stainless steel. The first-stage heaters are located in the condenser exhaust neck.

Figure 10.4-8 shows the heater drain system. All feedwater heater drains are cascaded back to the condenser (6-5-4-3-2-1 condenser). Reheater drains are carried to the number 6 heaters whereas the moisture separators drain to the number 5 heaters.

Condensate from the condenser hotwell is pumped by three motor-driven pumps of one-third capacity each. The condensate is pumped through the gland seal steam condenser, the steam jet air ejector condensers, the offgas condenser, the condensate demineralization system, and then to the suction of the condensate booster pumps. The condensate pumps are designed to pump approximately 11,000 gpm each with a TDH of 375 ft.

Three motor-driven condensate booster pumps are provided in the system. The capacity of the booster pumps matches that of the condensate pumps, one-third capacity for each pump at design rated feedwater flow. The booster pumps provide the required head to pump the

condensate through the five low pressure heaters and provide sufficient excess head to ensure sufficient net positive suction head (NPSH) at the reactor feedwater pumps suction.

The condensate booster pumps are designed to pump approximately 11,000 gpm each with a TDH of 925 ft. Using the condensate pumps, the condensate booster pumps and a series of heat exchangers, the system delivers 14,981,600 lb/hr of condensate at 467 psig and 366°F to the reactor feedwater pumps. Minimum flow through the gland seal steam condenser and steam jet air ejector condenser is controlled by using a recirculation control valve located in the condensate pump discharge lines to permit recirculation of condensate to the condenser.

Two one-half nominal capacity turbine-driven reactor feedwater pumps are provided. Each pump is capable of providing two-thirds of the rated feedwater flow during one pump operation. Minimum flow through the reactor feedwater pumps is controlled by using recirculation control valves located in the pump discharge lines to permit recirculation of feedwater to the condenser.

To minimize the corrosion product input to the reactor, a startup recirculation line is provided from the reactor feedwater supply lines, downstream of the high pressure feedwater heaters, to the main condenser.

The feedwater control system automatically controls the flow of feedwater into the reactor pressure vessel to maintain the water level in the vessel within predetermined levels during all modes of plant operation.

A hydrogen injection system is installed across the condensate booster pumps. The system uses discharge pressure to the pumps to feed dissolved hydrogen into the suction of the booster pumps.

A depleted zinc oxide (DZO) passive injection system (zinc) is installed across the feedwater pumps. The discharge pressure of the pumps can be used to inject a soluble zinc solution into the suction header of the feedwater pumps. Injection of zinc reduces the radioactive contamination on primary piping and components by reducing the levels of cobalt-60.

An iron injection system, installed on the suction line of the condensate booster pumps, can be used to inject an iron oxalate solution into the reactor feedwater. This iron injection system can be used to increase the reactor feedwater iron concentration to build a thin iron film on the inside of the piping to the vessel, vessel internals, and on the fuel.

Table 10.4-1 presents some of the major characteristics of equipment in this system.

10.4.7.3 Safety Evaluation

During operation, radioactive steam and condensate are present in the feedwater heating portion of the system which includes the extraction steam piping, feedwater heater shells, heater drain piping, and heater vent piping. Shielding and controlled access are discussed in Chapter 12. The condensate and feedwater system is designed to minimize leakage with welded construction used throughout the piping system. Feedwater heater shell-side relief valve discharges and operating vents are routed to the condenser.

The condensate and feedwater system is not required to effect or support the safe shutdown of the reactor or perform safety functions.

If it is necessary to remove a component such as a feedwater heater, pump, or control valve from service, continued operation of the system is possible by use of the multistream arrangement and the provisions for isolating and bypassing equipment and sections of the system.

The analysis of both the condensate and feedwater individual component failures is bounded by the feedwater component system failure analysis. These analyses are provided in Sections 15.1.1, 15.1.2, and 15.2.7. Included also in Section 15.6.6, are the isolation provisions that minimize release of radioactivity to the environment.

Criteria for feedwater isolation of the reactor coolant system is presented in Section 6.2.4.

10.4.7.4 Tests and Inspections

Each feedwater heater, heater drain tank, condensate pump, condensate booster pump, reactor feedwater pump, and system valves were shop hydrostatically tested at 1.5 times their design pressure. All pumps were shop performance tested. All tube joints of feedwater heaters were shop leak tested. Prior to initial operation portions of the completed ANSI B31.1 feedwater system welds were 100% X-rayed. The remainder of the completed condensate and feedwater system received a field hydrostatic test.

Pressure, temperature, conductivity, and flow instrumentation are provided to monitor system performance during operation. A separate, additional wireless monitoring system comprised of pressure, temperature and flow measuring equipment, is installed to monitor Feedwater Heaters 6A and 6B, as well as the Main Condensate Heaters 5A and 5B. The EMI/RFI characteristics were evaluated and found to be acceptable. Inservice inspection of applicable reactor feedwater piping is presented in Section 5.2.4.

10.4.7.5 Instrumentation

Feedwater flow-control instrumentation measures the feedwater flow rate from the condensate and feedwater system. This measurement is used by the feedwater control system that regulates the feedwater flow to the reactor to meet system demands. The feedwater control system is described in Section 7.7.1.4.

The isolation criteria for the feedwater system is loss of feedwater flow. Isolation valves are remotely operated from the main control room using signals which indicate loss of feedwater flow.

Instrumentation and controls regulate pump recirculation flow rate for the condensate pumps, condensate booster pumps, and reactor feed pumps. Measurements of pump suction and discharge pressures are provided for all pumps in the system. Sampling means are provided for monitoring the quality of the final feedwater (see Section 9.3.2). Temperature measurements are provided for each stage of feedwater heating and these include measurements at the inlet and outlet on both the steam and water sides of the heaters. Steam-pressure measurements are provided at each feedwater heater. Instrumentation and controls are provided for regulating the heater drain flow rate to maintain the proper condensate level in each feedwater heater shell and heater drain tank. High-level alarm and automatic dump-to-condenser on high level are provided.

Pressure, temperature, conductivity, and flow instrumentation are provided to monitor system performance. The operation of the hotwell makeup and high level dump valves is controlled by the hotwell level controller (Figure 10.4-6).

10.4.8 STEAM GENERATOR BLOWDOWN SYSTEMS

This section is not applicable to a BWR.

10.4.9 AUXILIARY FEEDWATER SYSTEM

This section is not applicable to a BWR.

10.4.10 HYDROGEN WATER CHEMISTRY SYSTEM

10.4.10.1 Design Bases

The Hydrogen Water Chemistry System (HWC) is designed to lower the electrochemical corrosion potential (ECP) of reactor coolant. Studies have shown that the lowering of ECP in the core below –230 mV_{SHE} will mitigate any existing intergranular stress corrosion cracking (IGSCC) and prevents future development of IGSCC in stainless steel components in the reactor coolant recirculation piping and lower reactor internals.

The HWC system injects hydrogen into the feedwater stream, increasing the concentration of dissolved hydrogen in reactor coolant. The presence of dissolved hydrogen suppresses the radiolytic generation of oxygen in the core and acts as a catalyst for the recombination of hydrogen and oxidants on the surface of piping and reactor internals. As a result, oxygen concentrations are reduced. The lower oxygen concentration reduces the ECP of the coolant.

The HWC system can inject up to 30 SCFM of hydrogen into the condensate/feedwater stream, resulting in a hydrogen concentration of up to 0.52 ppm in feedwater. Since the radiolytic generation of oxygen is suppressed, HWC also injects Service Air into the condenser Offgas stream to ensure that a stoichiometic ratio of hydrogen and oxygen are maintained for recombination.

10.4.10.2 System Description

The HWC system is shown schematically in Figures 10.4-9.1, 10.4-9.2, and 10.4-9.3. The system consists of a Hydrogen Storage and Supply Facility (HSSF), a hydrogen injection module, an air injection module, and a main control panel. The HSSF is located approximately 0.6 miles south-southeast of the Plant. A buried 2-inch pipe supplies hydrogen gas from the HSSF to the Turbine Generator Building (TGB) at approximately 200 psig. The hydrogen injection module, located on TGB 441′, regulates the gas flow to a sparger in a bypass line across the condensate booster pumps.

10.4.10.2.1 Hydrogen Storage and Supply Facility

The HSSF stores up to 14,000 gallons of liquid hydrogen at approximately 80 psig. The liquid H_2 is pumped, vaporized, and stored in six ASME storage tubes at approximately 2450 psig. The ASME tubes have a 40,000 SCF capacity, and serve as the primary source of gaseous H_2 for the HWC system. Gaseous hydrogen flows to a pressure control manifold that reduces the pressure to the 200 psig for supply to the TGB.

Two 100% capacity parallel pump trains, each with its own vaporizer, are provided for system reliability. One pump operates while the other acts as a backup. The ASME storage tubes are pressurized in a batch process, with pumping initiated when pressure in the tubes decays to approximately 650 psig.

The HSSF has a backup tube trailer that stores approximately 120,000 SCF of gaseous H_2. The HSSF has space for a second tube trailer that is used in the event of the functional loss of the liquid H_2 supply. Upon depletion of the inventory in the ASME tubes, the plant supply of hydrogen automatically switches to the tube trailer. As the inventory of the tube trailer is depleted, a replacement tube trailer is brought in. The depleted tube trailer is removed, replenished, and returned. In this way, the HSSF ensures a continuous, reliable supply of gaseous H_2 to the HWC system.

The HSSF also has a liquid nitrogen storage tank and vaporizer. Gaseous nitrogen is used for HSSF control functions and purging operations.

The operation of the hydrogen supply system at the HSSF is normally automatic, using programmable logic controllers (PLCs) located in a local pump control panel and hydrogen control panel.

The piping at the HSSF is designed to ASME B31.3, Chemical Plant and Petroleum Refinery Piping. The underground yard piping is designed to the requirements of ASME B31.1, Power Piping. All liquid and gas storage vessels are designed, fabricated, and stamped as ASME Boiler and Pressure Vessel Code, Section VIII, Division I, Unfired Pressure Vessels. The applicable fire protection codes are found in Appendix F Table F.3-1.

10.4.10.2.2 Hydrogen and Air Injection

The rate of hydrogen injection is regulated by a PLC in the HWC main control panel, located on the 471′ elevation of the TGB. Hydrogen injection is manually initiated above 5% reactor power, and is then automatically maintained at a rate proportional to reactor power when above 20% power. The injection rate is modulated based on reactor power.

HWC's suppression of radiolysis in the core results in an imbalance of hydrogen and oxygen in the condenser offgas stream. This imbalance is corrected by the injection of air into the Offgas system, upstream of the catalytic hydrogen recombiners. The Service Air system supplies the air for injection into offgas. The injection system is designed for a maximum flow rate of 93 SCFM.

The air injection rate is modulated based upon the rate of hydrogen injection. Since air leakage into the condenser contributes to the oxygen available for recombination, the required rate of air injection is reduced to account for the rate of air in-leakage.

The Mitigation Monitoring System (MMS) provides an indication of ECP in the reactor water. The MMS system contains an iron oxide element and a platinum element that may be used for measurement of the ECP of reactor water. ECP may also be monitored using an ECP LPRM probe in the core (see Section 7.6.1.4.2.2). The MMS and ECP LPRM provide an initial correlation of ECP to hydrogen injection to establish a baseline for operation of HWC.

10.4.10.3 Safety Evaluation

The HWC system does not fall within the definitions of any of the safety classifications identified in FSAR Section 3.2.3. However, the storage and handling of a combustible gas entails numerous safety issues that were addressed in the system's design.

The system was designed, procured, and installed to Quality Class II and Seismic Category II requirements. Exceptions are identified below.

- HWC cable terminations, electrical relays, and switches in the main control room panels are Quality Class I. Indicating lights in control room panels are Seismic Category 1M.
- HWC piping in the interfacing portion of the offgas system is Quality Class II+.
- The HSSF liquid hydrogen storage tank, its support foundation and soil were analyzed and installed to Quality Class I and Seismic Category I requirements.

All tanks and pipelines are provided with relief valves for overpressure protection. The liquid H_2 storage tank has redundant rupture discs for added protection.

The effects of the catastrophic failures of HSSF tanks at normal or elevated pressure were analyzed, and it was determined that the energy from such failures would not directly affect safety related or important to safety structures, systems, or components. Missiles generated from vessel failures at normal operating pressure would have insufficient energy to reach safety related or important to safety structures, systems, or components. Analysis has shown that missiles generated from an over pressurization event would have a total annual probability of impact less than 10^{-7} and therefore are not considered credible.

The hydrogen storage tanks at the HSSF are designed to stay in place for all natural phenomena (i.e., earthquakes, tornado winds, floods). No event will cause the tanks to be transported closer to the Plant. Local flooding from a Probable Maximum Precipitation (PMP) event would submerge the tanks (see Section 2.4.2.3), but not dislodge them. Similarly, the vent stack of the liquid H_2 storage tank is designed for flood conditions, with its outlet above PMP flood level. The vent stack design ensures that the tank will continue to off-gas vaporized hydrogen during the flood.

The HSSF is not designed to withstand tornado missiles. A tornado missile could cause the gross failure of a storage tank at the HSSF. However, as noted above, vessel failures have no effect on safety related or important to safety structures, systems, or components.

Similarly, an atmospheric release of all hydrogen stored at the HSSF will have no adverse impact on control room habitability. The HSSF has a maximum storage capacity of approximately 9800 pounds of liquid and gaseous hydrogen. The storage of this amount of hydrogen at the HSSF is not considered a hazard for control room habitability due to the distance from the plant air and remote air intakes to the HSSF.

Malfunctions at the HSSF will not have any adverse impact on Plant safety. The major potential effect of failures is the loss of supply of gaseous hydrogen for injection into condensate. The loss of hydrogen injection will cause a release of metallic radionuclides in reactor coolant, a transient N^{16} spike in the Main Steam lines and increase ECP in the reactor core. The Plant will continue to operate safely on loss of H_2 injection.

The buried supply line between the HSSF and the Plant is welded 2 in. schedule 80 pipe. Since the buried pipe passes under, and is routed next to a railroad track, the design was demonstrated to be in compliance with the American Railway Engineering Association (AREA) Manual for Railway Engineering.

In the area of the Plant, the buried H_2 supply line is encased in a guard pipe. The guard pipe provides mechanical protection, and a means to monitor the pipe for leakage. The vent of the buried line's guard pipe is directed to a hydrogen detector at the hydrogen supply valve station immediately outside the TGB. Hydrogen detectors are also located in the hydrogen injection module and at the Condensate system injection point. The HWC system is automatically shut down upon receipt of a high-high hydrogen signal from any of these detectors.

The hydrogen does not add to the combustible material in the TGB, since it is contained within welded pipe, and appropriate flow-limiting devices are included in the system. Excess flow valves are located in the supply line at both the HSSF and outside the TGB. The automatic closure of either excess flow valve would mitigate the effects of ruptures of the hydrogen supply line in or around the TGB.

The inadvertent introduction of hydrogen to condensate/feedwater during extended shutdowns is prevented by isolation of the hydrogen supply, and purging the hydrogen injection system with nitrogen.

The injection of hydrogen results in a transient increase in N^{16} activity in steam exiting the reactor, and an increase in the transport of metallic radionuclides to the recirculation system's piping and components. These effects are similar to those resulting from NobleChem injection (Section 5.2.3.2.2). The increased dose rates have no effect on equipment qualification.

The injection of hydrogen into feedwater reduces radiolysis in the reactor core, and results in a net reduction of hydrogen in Main Steam. The injection of hydrogen decreases secondary-side concentrations of dissolved oxygen. Secondary side chemistry is maintained in accordance with EPRI NP-5283-SR-A, "Guidelines for Permanent BWR Hydrogen Water Chemistry Installations". Dissolved oxygen is maintained in a range where Flow-Accelerated Corrosion (FAC) will not be exacerbated.

Hydrogen injection terminates automatically when feedwater flow drops below 25%. Hydrogen injection can also be terminated manually from the control room.

The injection of air into offgas increases the transport rate of radioactive species through the system with no adverse effect on system function. Offsite releases are maintained within the limits of 10 CFR 50 Appendix I and 10 CFR 20 Appendix B, Table II.

With the lowered net flow of hydrogen through offgas, the condenser's steam jet air ejectors provide sufficient dilution steam to maintain the hydrogen concentration below the maximum allowable concentration of 4% by volume (FSAR Section 10.4.2.3).

10.4.10.4 Tests and Inspections

The Hydrogen Water Chemistry system underwent a series of factory acceptance tests and site tests. The tests verified the operability of components, the logic of PLC programming, and the functionality of the integrated system. Site testing included the tuning of the HWC system to achieve the required ECP in the core, and benchmarking the Columbia Station's response to hydrogen and air injection.

10.4.10.5 Instrumentation

The Hydrogen Water Chemistry system is controlled by an integrated system of instrumentation and programmable logic controllers.

The HSSF is automatically operated by two PLCs, one located in the pump control panel and the other in the hydrogen control panel. The PLCs:

- Monitor pressures, temperatures and levels of the hydrogen and nitrogen systems,
- Control and monitor the hydrogen pumps and associated interlocks,
- Contain industrial safety interlocks for the HSSF facility, and
- Provide system status, process and alarm data to a remote annunciator panel.

The remote annunciator panel is located in the chemistry laboratory of the Radwaste Building, el 487′. The panel includes a human-machine interface PC that displays mimics, process information, and all HSSF alarms. The panel has one control interface with the HSSF, allowing the remote isolation of the HSSF from the Plant. The panel also receives HWC process information from a PLC in the HWC control panel, located on TGB el 441′.

The HWC control panel's PLC controls the injection of hydrogen and air into the condensate and offgas systems, respectively. The PLC control logic is based upon input flow signals from the hydrogen control module, oxygen control module, and feedwater system. In addition, the PLC receives signals from TGB hydrogen leakage detectors, offgas hydrogen analyzers, and a

summed alarm from the HSSF PLCs. Finally, the PLC receives an enable signal from a switch located on a panel in the main control room. The switch is a permissive for the operation of the hydrogen water chemistry system. The switch can also be used to shut the system down.

Hydrogen and air injection is manually initiated from the HWC Control Panel. Injection is automatically terminated by the PLC when the reactor is shut down. Injection can also be manually terminated at the HWC control panel.

Alarms from the HSSF and the HWC injection system are annunciated at the HWC control panel and in the main control room. HSSF process alarms display as a summed "HSSF Trouble Alarm" at the HWC control panel and as "HWC Trouble" in the main control room. The HWC control panel has annunciators for the display of specific, local process alarms. The HWC process alarms also actuate the summed "HWC Trouble" alarm in the main control room.

Any manual or automatic shutdown of HWC is annunciated as "HWC Shutdown" in the main control room. Automatic shutdown occurs if any of the following signals is received:

Reactor Scram
Offgas Isolation
High Hydrogen Flow
PLC Fault
High Hydrogen Pressure
Loss of Feedwater or H_2 Flow Signal
Low Process Air Pressure
Offgas Analyzers O.O.S.
High-High Area Hydrogen
Low Condensate flow at Injector
Offgas % Hydrogen High Shutdown
Purge
Local Shutdown Demand
Control Room Shutdown Demand

These signals simultaneously annunciate on the HWC control panel.

Table 10.4-1

Feedwater System Equipment Characteristics[a]

Condensate pumps	
Quantity	3
Capacity[a]	11,000 gpm/pump
Total discharge head	375 ft
Minimum flow	5600 gpm/pump
Driver	1250 hp ac motor
Condensate booster pumps	
Quantity	3
Capacity[a]	11,030 gpm/pump
Total discharge head	925 ft
Minimum flow	2500 gpm/pump
Driver	3000 hp ac motor
Reactor feedwater pumps	
Quantity	2
Capacity[a]	18,520 gpm/pump
Total discharge head	2585 ft
Minimum flow	Designed for 4600 gpm/pump at 5100 ft breakdown
Driver	Steam turbine
Steam jet air ejectors condenser	
Quantity	2-100%
Minimum cooling flow	5000 gpm
Gland seal steam condenser	
Quantity	2-100%
Design flow	6500 gpm
Pressure drop	6 psi

Table 10.4-1

Feedwater System Equipment Characteristics (Continued)

Feedwater heaters	
Quantity	16 (one-third capacity up to and including heater 4 and one-half capacity for heaters 5 and 6)

Condensate (tube-side original design conditions)

Heaters	Flow/Chain (lb/hr)	Pressure Drop at Design Flow (psi)	Inlet Temp (°F)	Outlet Temp (°F)
1A, 1B, 1C	4,752,000	5.8	109.4	168.8
2A, 2B, 2C	4,752,000	5.4	168.8	208.5
3A, 3B, 3C	4,752,000	3.5	208.5	262.1
4A, 4B, 4C	4,752,000	6.0	262.1	291.3
5A, 5B	7,128,000	4.0	291.3	358.4
6A, 6B	7,128,000	9.9	360.1	419.8

[a] Capacity is based on 115% of the original rated condensate/feedwater flow.

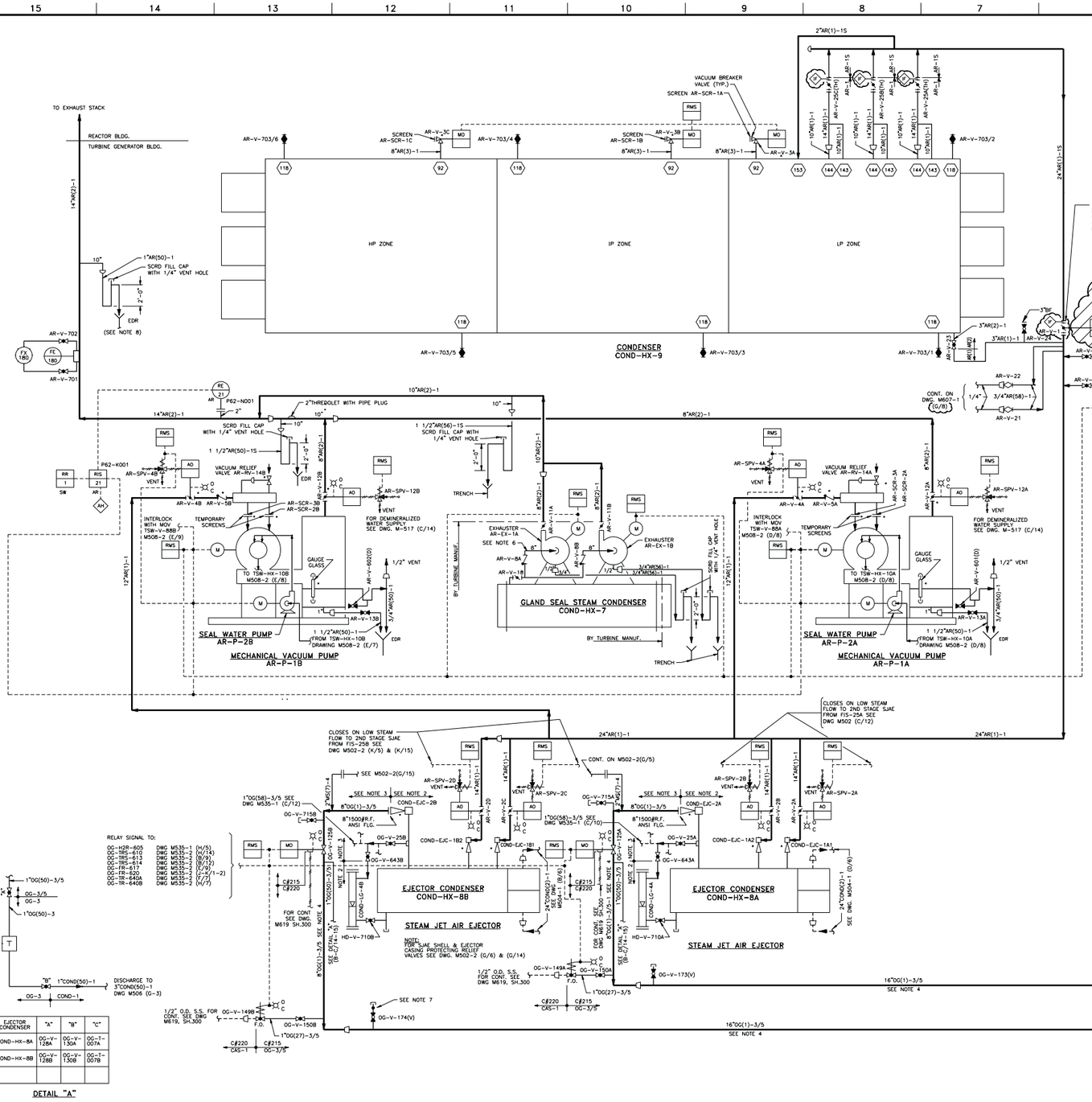

NOTES:

1. ALL ITEMS MARKED * ARE FURNISHED WITH ASSOCIATED EQUIPMENT.
2. ALL PIPING, VALVES, AND ASSOCIATED COMPONENTS ON THIS DRAWING IN THE AIR REMOVAL SYSTEM SHALL BE AS FOLLOWS EXCEPT FOR THE AIR EJECTOR DISCHARGES
   QUALITY CLASS II
   SEISMIC CATEGORY II
   CODE GROUP D
3. ALL PIPING, VALVES, & ASSOCIATED COMPONENTS ON THIS DRAWING IN THE OFF GAS SYSTEM OR AIR EJECTOR DISCHARGES SHALL BE AS FOLLOWS:
   QUALITY CLASS II+
   SEISMIC CATEGORY II
   CODE GROUP D+
   +SEE NOTE 12, WNP-2 SPEC, SECTION 15B.1, TABLE 2 NOTES.
4. IF L/D RATIO OF THIS LINE IS < 7.0 DECREASED DESIGN PRESSURE PERMITS USE OF SCHEDULE 40 PIPING AND 600LB ANSI-RATED FLANGES.
5. ALL INSTRUMENT ROOT VALVES NOT LABELED WILL BE 3/4" GLOBE VALVES UNLESS SPECIFICALLY NOTED OTHERWISE.
6. GLAND STEAM CONDENSER EXHAUSTER (AR-EX-1A & 1B) SUCTION PIPING INCLUDING CHECK VALVES AR-V-8A & 8B ARE FURNISHED WITH THE GLAND STEAM CONDENSER (CONTRACT #1) WITH THE EXCEPTION THAT THROTTLE VALVE AR-V-1B AND ITS MATING SET OF FLANGES ARE TO BE FURNISHED AND INSTALLED BY THE 215 CONTRACTOR IN THE LOCATION SHOWN.
7. "F" INDICATES VENT OR DRAIN VALVE PIPE CAP WAS SEAL WELDED TO ENABLE SYSTEM TO PASS HELIUM LEAK TESTING.
8. THIS EQUIPMENT DRAIN ROUTES TO FDR SUMP R4 (SEE M537 & M539).
9. SEE DWG M501 FOR FLOW DIAGRAM LEGENDS, SYMBOLS AND ABBREVIATIONS.

LEGEND

1. ALL VALVES SUFFIXED WITH A (V) DENOTE A 3/4" VENT VALVE.
2. ALL VALVES SUFFIXED WITH A (D) DENOTE, A 3/4" DRAIN VALVE.
3. ALL VALVES SUFFIXED WITH A (TH) DENOTE A THROTTLED VALVE.

Columbia Generating Station Final Safety Analysis Report	Main Condenser Evacuation System		
	Draw. No. M511	Rev. 60	Figure 10.4-1

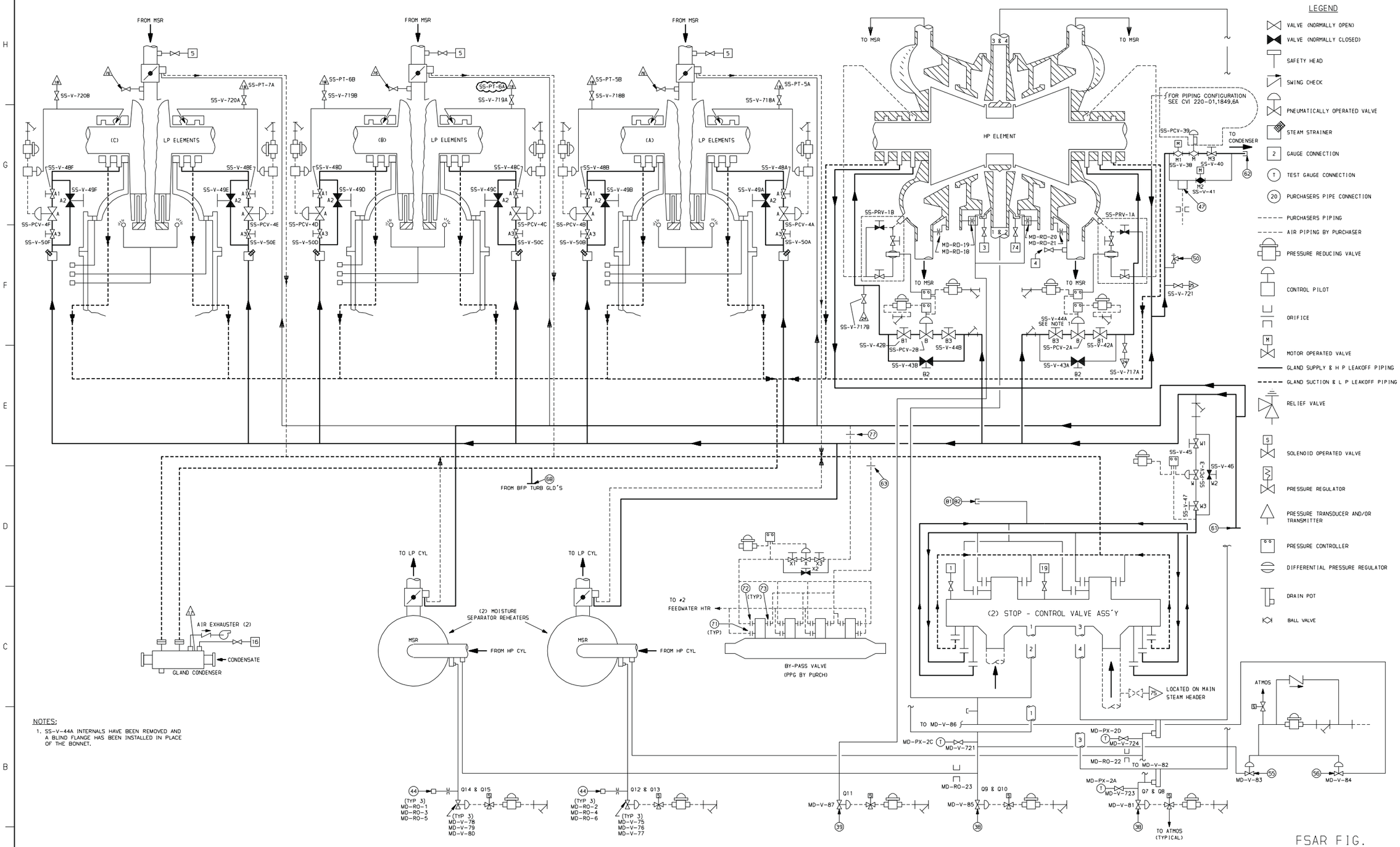

LEGEND

- VALVE (NORMALLY OPEN)
- VALVE (NORMALLY CLOSED)
- SAFETY HEAD
- SWING CHECK
- PNEUMATICALLY OPERATED VALVE
- STEAM STRAINER
- GAUGE CONNECTION
- TEST GAUGE CONNECTION
- PURCHASERS PIPE CONNECTION
- PURCHASERS PIPING
- AIR PIPING BY PURCHASER
- PRESSURE REDUCING VALVE
- CONTROL PILOT
- ORIFICE
- MOTOR OPERATED VALVE
- GLAND SUPPLY & H P LEAKOFF PIPING
- GLAND SUCTION & L P LEAKOFF PIPING
- RELIEF VALVE
- SOLENOID OPERATED VALVE
- PRESSURE REGULATOR
- PRESSURE TRANSDUCER AND/OR TRANSMITTER
- PRESSURE CONTROLLER
- DIFFERENTIAL PRESSURE REGULATOR
- DRAIN POT
- BALL VALVE

NOTES:

1. SS-V-44A INTERNALS HAVE BEEN REMOVED AND A BLIND FLANGE HAS BEEN INSTALLED IN PLACE OF THE BONNET.

FSAR FIG.

Columbia Generating Station
Final Safety Analysis Report

Turbine Gland Sealing System

Draw. No. 01-00,143,1	Rev. 16	Figure 10.4-2

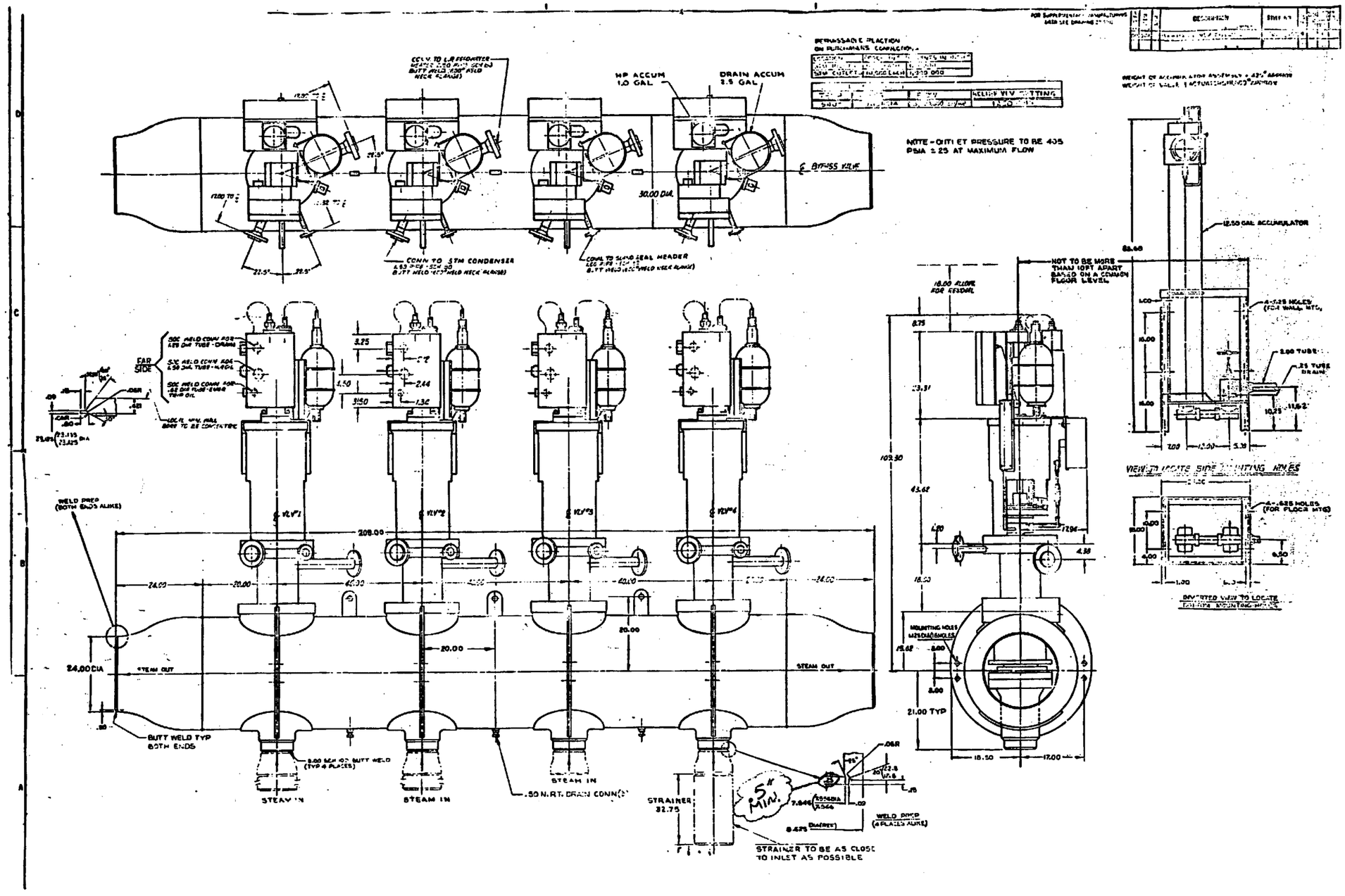

Columbia Generating Station Final Safety Analysis Report	Turbine Bypass Valve Outline		
	Draw. No. 01-00,110	Rev. 4	Figure 10.4-3

Form No. 960690

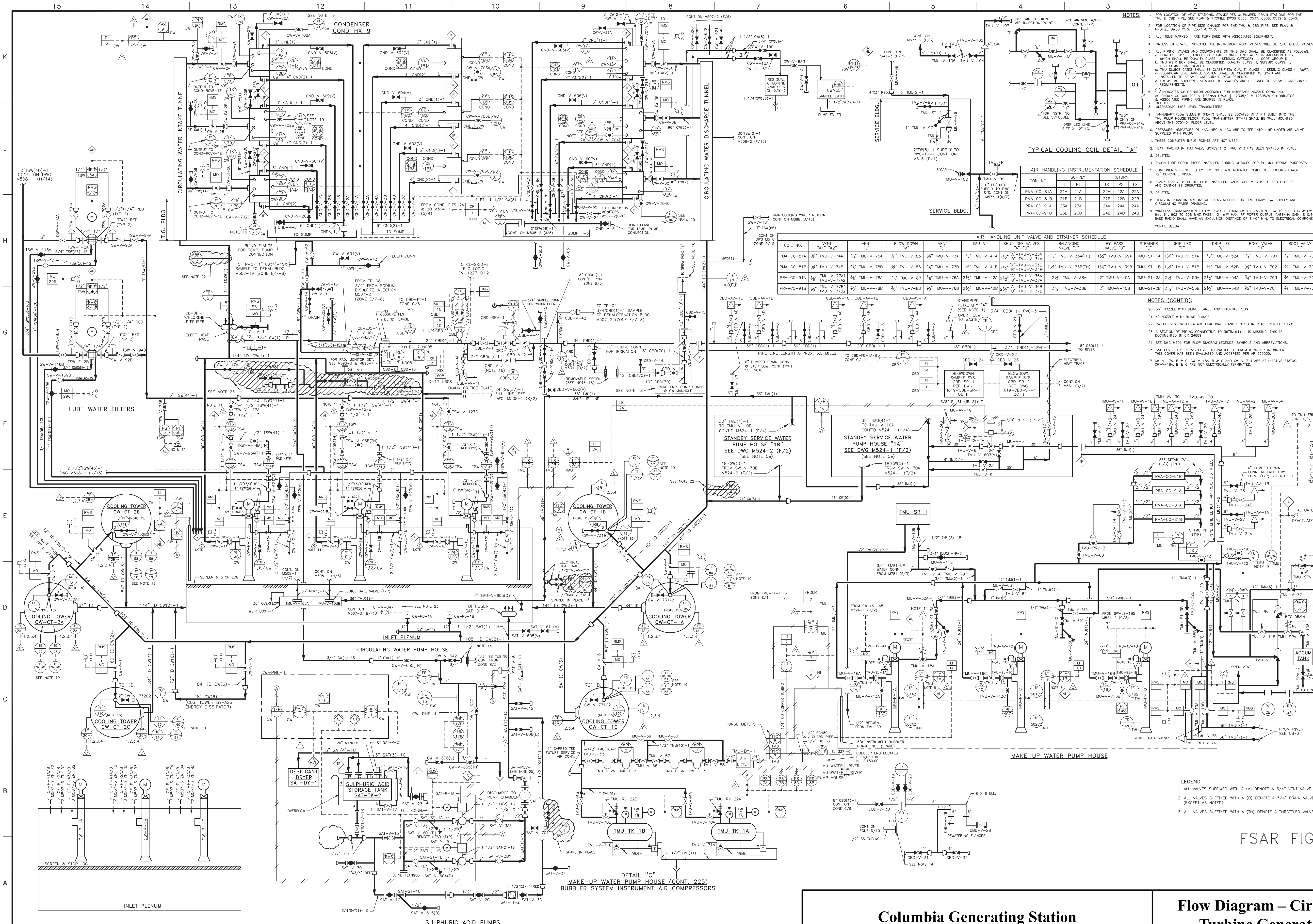

AIR HANDLING INSTRUMENTATION SCHEDULE

COIL NO.	SUPPLY TI	SUPPLY PI		RETURN TX	RETURN PX	RETURN FX
PMA-CC-81A	21A	21A		22A	22A	22A
PMA-CC-81B	21B	21B		22B	22B	22B
PRA-CC-91A	23A	23A		24A	24A	24A
PRA-CC-91B	23B	23B		24B	24B	24B

AIR HANDLING UNIT VALVE AND STRAINER SCHEDULE

COIL NO.	VENT "K1" "K2"	VENT "L"	BLOW DOWN "M"	VENT "J"	TMU-V-	SHUT-OFF VALVES "A"-"B"	BALANCING VALVE "C"	BY-PASS VALVE "D"	STRAINER "E"	DRIP LEG "F"	DRIP LEG "G"	ROOT VALVE "H"	ROOT VALVE "I"
PMA-CC-81A	3/8" TMU-V-74A	3/8" TMU-V-75A	3/8" TMU-V-85	3/8" TMU-V-73A	1 1/2" TMU-V-41A	1 1/2" "A"-TMU-V-33A "B"-TMU-V-34A	1 1/2" TMU-V-35A(TH)	1 1/4" TMU-V-39A	TMU-ST-1A	1 1/2" TMU-V-51A	1 1/2" TMU-V-52A	3/4" TMU-V-701	3/4" TMU-V-705
PMA-CC-81B	3/8" TMU-V-74B	3/8" TMU-V-75B	3/8" TMU-V-86	3/8" TMU-V-73B	1 1/2" TMU-V-41B	1 1/2" "A"-TMU-V-33B "B"-TMU-V-34B	1 1/2" TMU-V-35B(TH)	1 1/4" TMU-V-39B	TMU-ST-1B	1 1/2" TMU-V-51B	1 1/2" TMU-V-52B	3/4" TMU-V-702	3/4" TMU-V-706
PRA-CC-91A	3/8" TMU-V-77A1 TMU-V-77A2	3/8" TMU-V-78A	3/8" TMU-V-87	3/8" TMU-V-76A	2 1/2" TMU-V-42A	2 1/2" "A"-TMU-V-36A "B"-TMU-V-37A	2 1/2" TMU-V-38A	2" TMU-V-40A	TMU-ST-2A	2 1/2" TMU-V-53A	2 1/2" TMU-V-54A	3/4" TMU-V-703	3/4" TMU-V-707
PRA-CC-91B	3/8" TMU-V-77B1 TMU-V-77B2	3/8" TMU-V-78B	3/8" TMU-V-88	3/8" TMU-V-76B	2 1/2" TMU-V-42B	2 1/2" "A"-TMU-V-36B "B"-TMU-V-37B	2 1/2" TMU-V-38B	2" TMU-V-40B	TMU-ST-2B	2 1/2" TMU-V-53B	2 1/2" TMU-V-54B	3/4" TMU-V-704	3/4" TMU-V-708

NOTES:

1. FOR LOCATION OF VENT STATIONS, STANDPIPES & PUMPED DRAIN STATIONS FOR THE TMU & CBD PIPE, SEE PLAN & PROFILE DWGS C536, C537, C538, C539 & C540.
2. FOR LOCATION OF PIPE SIZE CHANGE FOR THE TMU & CBD PIPE, SEE PLAN & PROFILE DWGS C536, C537 & C538.
3. ALL ITEMS MARKED * ARE FURNISHED WITH ASSOCIATED EQUIPMENT.
4. UNLESS OTHERWISE INDICATED ALL INSTRUMENT ROOT VALVES WILL BE 3/4" GLOBE VALVES.
5. ALL PIPING, VALVES AND COMPONENTS ON THIS DWG SHALL BE CLASSIFIED AS FOLLOWS:
   a. QUALITY CLASS II, EXCEPT FOR TMU PIPING EARTH WORK INSTALLATION ONLY, WHICH SHALL BE QUALITY CLASS I, SEISMIC CATEGORY II, CODE GROUP D.
   b. TMU WEIR BOX SHALL BE CLASSIFIED: QUALITY CLASS II, SEISMIC CLASS II, AISC COMMERCIAL QUALITY.
   c. TMU SLUICE GATES SHALL BE CLASSIFIED: QUALITY CLASS II, SEISMIC CLASS II, AWWA.
   d. BLOWDOWN LINE SAMPLE SYSTEM SHALL BE CLASSIFIED AS QC-G AND INSTALLED TO SEISMIC CATEGORY II REQUIREMENTS.
   e. CW & TMU SUPPORTS ATTACHED TO SSWPH'S ARE DESIGNED TO SEISMIC CATEGORY I REQUIREMENTS.
6. ◯ INDICATES CHLORINATOR ASSEMBLY FOR INTERFACE NOZZLE CONN. NO. AS SHOWN ON WALLACE & TIERNAN DWGS # 12305/2 & 12305/9 CHLORINATOR & ASSOCIATED PIPING ARE SPARED IN PLACE.
7. DELETED.
8. ULTRASONIC TYPE LEVEL TRANSMITTERS.
9. "ANNUBAR" FLOW ELEMENT (FE-7) SHALL BE LOCATED IN A PIT BUILT INTO THE TMU PUMP HOUSE FLOOR. FLOW TRANSMITTER (FT-7) SHALL BE WALL MOUNTED ABOVE THE 375'-0" FLOOR LEVEL.
10. PRESSURE INDICATORS PI-4AG, 4BG & 4CG ARE TO TEE INTO LINE UNDER AIR VALVE SUPPLIED WITH PUMP.
11. THESE COMPUTER INPUT POINTS ARE NOT USED.
12. HEAT TRACING IN TMU VALVE BOXES # 2 THRU #13 HAS BEEN SPARED IN PLACE.
13. DELETED.
14. TYGON TUBE SPOOL PIECE INSTALLED DURING OUTAGES FOR PH MONITORING PURPOSES.
15. COMPONENTS IDENTIFIED BY THIS NOTE ARE MOUNTED INSIDE THE COOLING TOWER 72" CONCRETE RISER.
16. BLANK FLANGE (CBD-BF-1) IS INSTALLED, VALVE CBD-V-3 IS LOCKED CLOSED AND CANNOT BE OPERATED.
17. DELETED.
18. ITEMS IN PHANTOM ARE INSTALLED AS NEEDED FOR TEMPORARY TSW SUPPLY AND CIRCULATING WATER DRAINING.
19. WIRELESS TRANSMISSION TO CW-RCVR-1, FROM CW-PT-7A,7B,7C, CW-PT-9A,9B,9C & CW-TT-50 thru 61, 902 TO 928 MHZ FHSS. 31 mW MAX. RF POWER OUTPUT. ANTENNA GAIN IS 0.44 DBI. BASE RADIO SHALL HAVE AN EXCLUSION DISTANCE OF 1'-0" MIN. TO ELECTRICAL COMPONENTS

CONT'D BELOW

NOTES (CONT'D):

20. 36" NOZZLE WITH BLIND FLANGE AND INTERNAL PLUG.
21. 4" NOZZLE WITH BLIND FLANGE.
22. CW-FE-3 & CW-FE-4 ARE DEACTIVATED AND SPARED IN PLACE PER EC 10301.
23. A SECTION OF PIPING CONNECTING TO 36"TMU(1)-1 IS MISSING. THIS IS DOCUMENTED IN CR 24889.
24. SEE DWG M501 FOR FLOW DIAGRAM LEGENDS, SYMBOLS AND ABBREVIATIONS.
25. SAT-PCV-1 HAS A PVC COVER TO PROTECT IT FROM ICING UP IN WINTER. THIS COVER HAS BEEN EVALUATED AND ACCEPTED PER AR 295530.
26. CW-V-17A, B & C, CW-V-18A, B & C AND CW-V-714 ARE AT INACTIVE STATUS. CW-V-18A, B & C ARE NOT ELECTRICALLY TERMINATED.

LEGEND

1. ALL VALVES SUFFIXED WITH A (V) DENOTE A 3/4" VENT VALVE.
2. ALL VALVES SUFFIXED WITH A (D) DENOTE A 3/4" DRAIN VALVE (EXCEPT AS NOTED).
3. ALL VALVES SUFFIXED WITH A (TH) DENOTE A THROTTLED VALVE.

Columbia Generating Station
Final Safety Analysis Report

Flow Diagram – Circulating Water System – Turbine Generator Building and Yard

Draw. No. M507–1 | Rev. 184 | Figure 10.4–4.1

NOTES:

1. FOR NOTES AND LEGEND SEE DRAWING M507-1.

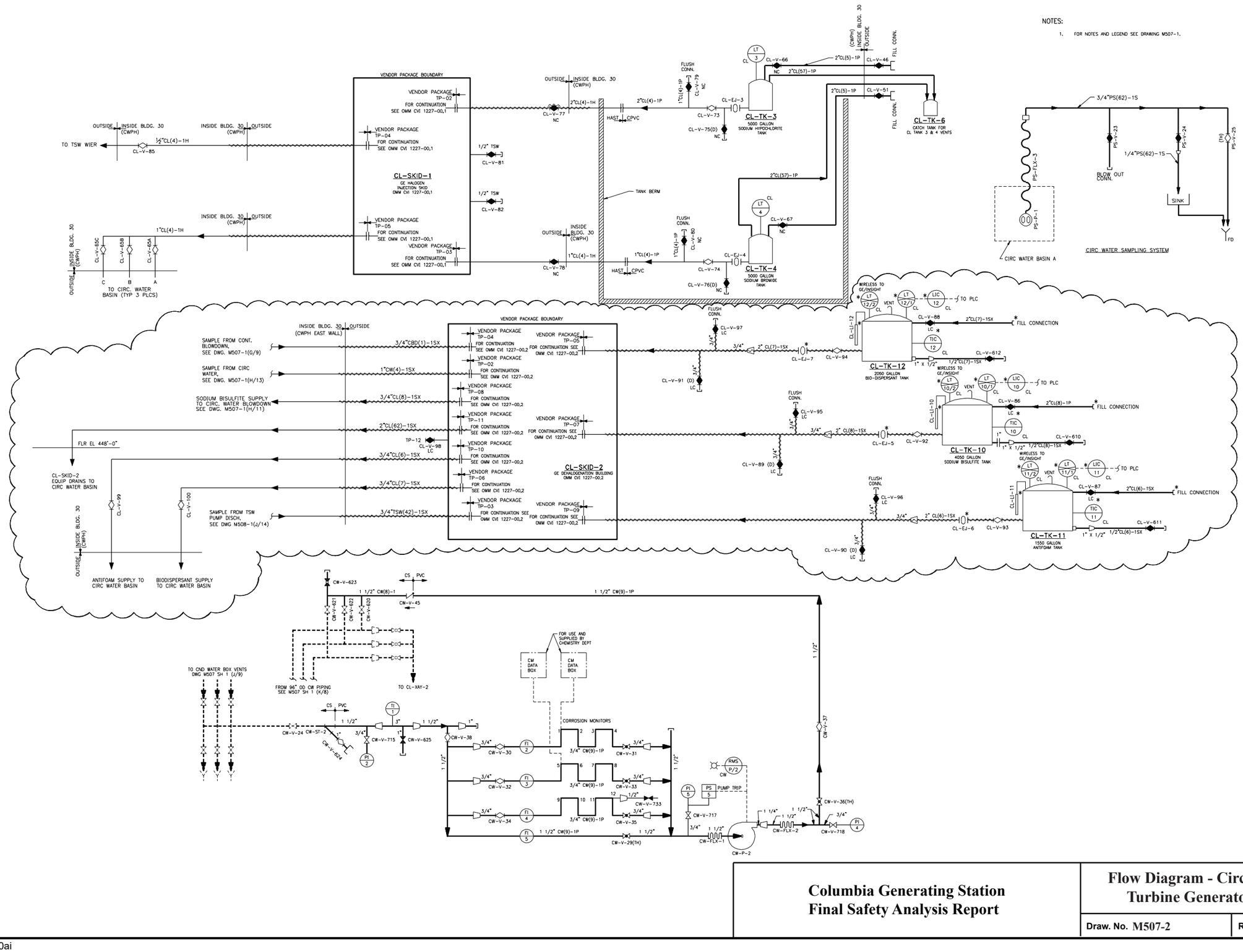

Columbia Generating Station
Final Safety Analysis Report

Flow Diagram - Circulating Water System - Turbine Generator Building and Yard

Draw. No. M507-2	Rev. 11	Figure 10.4-4.2

NOTES:

1. ALL WORK ON THIS DRAWING SHALL BE QUALITY CLASS G UNLESS OTHERWISE NOTED.
2. FOR A LIST OF REFERENCE DWGS REFER TO DWG C912.
3. ALL PIPING, VALVES, TANKS, PUMPS, INSTRUMENTS, ETC. ON THIS DWG ARE PART OF THE CHEMICAL FEED SYSTEM (CF).
4. EQUIPMENT IS LOCATED IN SOUTHEAST PORTION OF CIRC WATER PUMPHOUSE.
5. THE CHEMICAL STORAGE TANKS ARE HEAT TRACED AND INSULATED.
6. FOR NOTES AND LEGEND SEE DRAWING M507-1.
7. DELETED

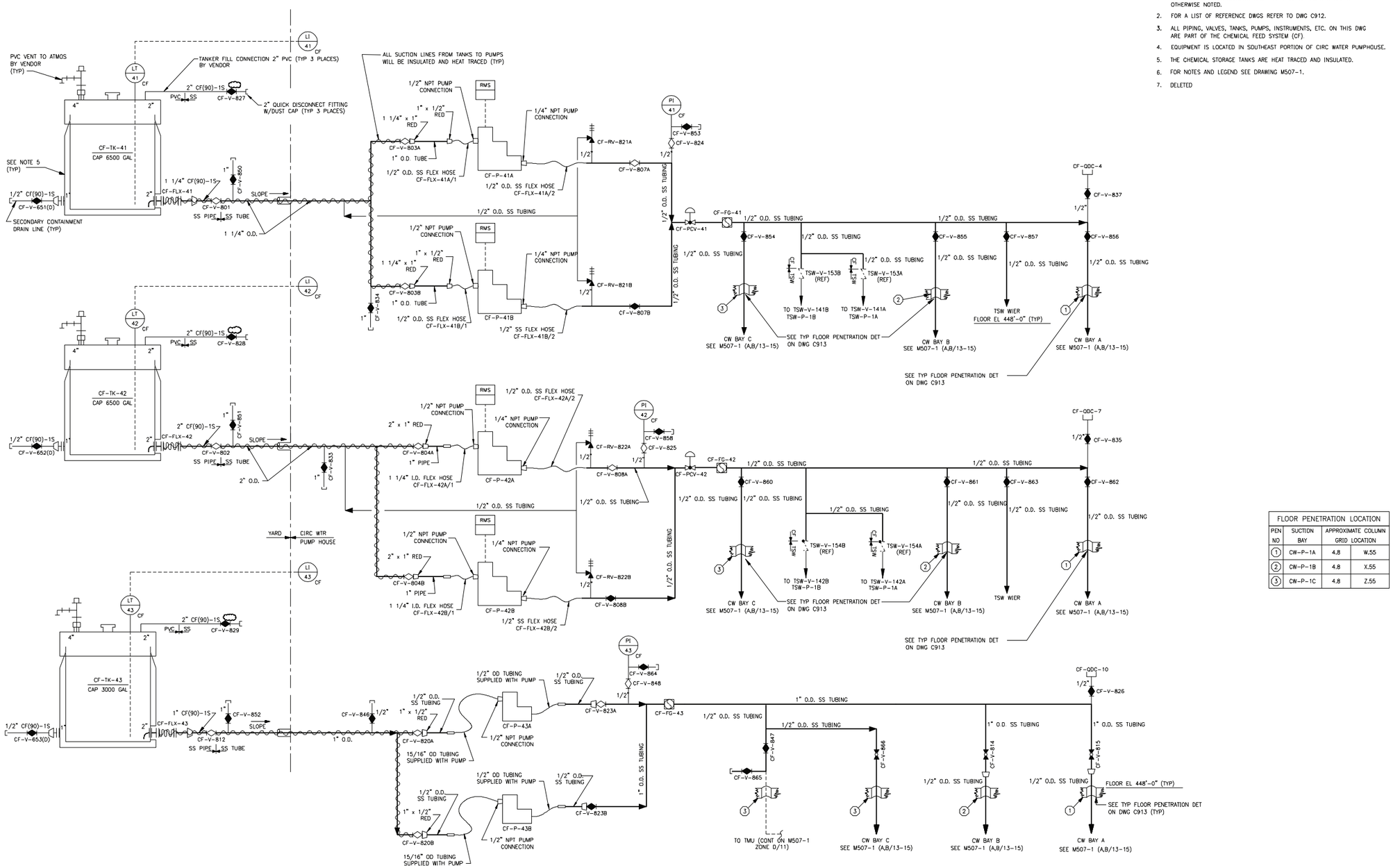

FLOOR PENETRATION LOCATION			
PEN NO	SUCTION BAY	APPROXIMATE COLUMN GRID LOCATION	
1	CW-P-1A	4.8	W.55
2	CW-P-1B	4.8	X.55
3	CW-P-1C	4.8	Z.55

Columbia Generating Station
Final Safety Analysis Report

Flow Diagram - Circulating Water System - Turbine Generator Building and Yard

Draw. No. M507-3 | Rev. 14 | Figure 10.4-4.3

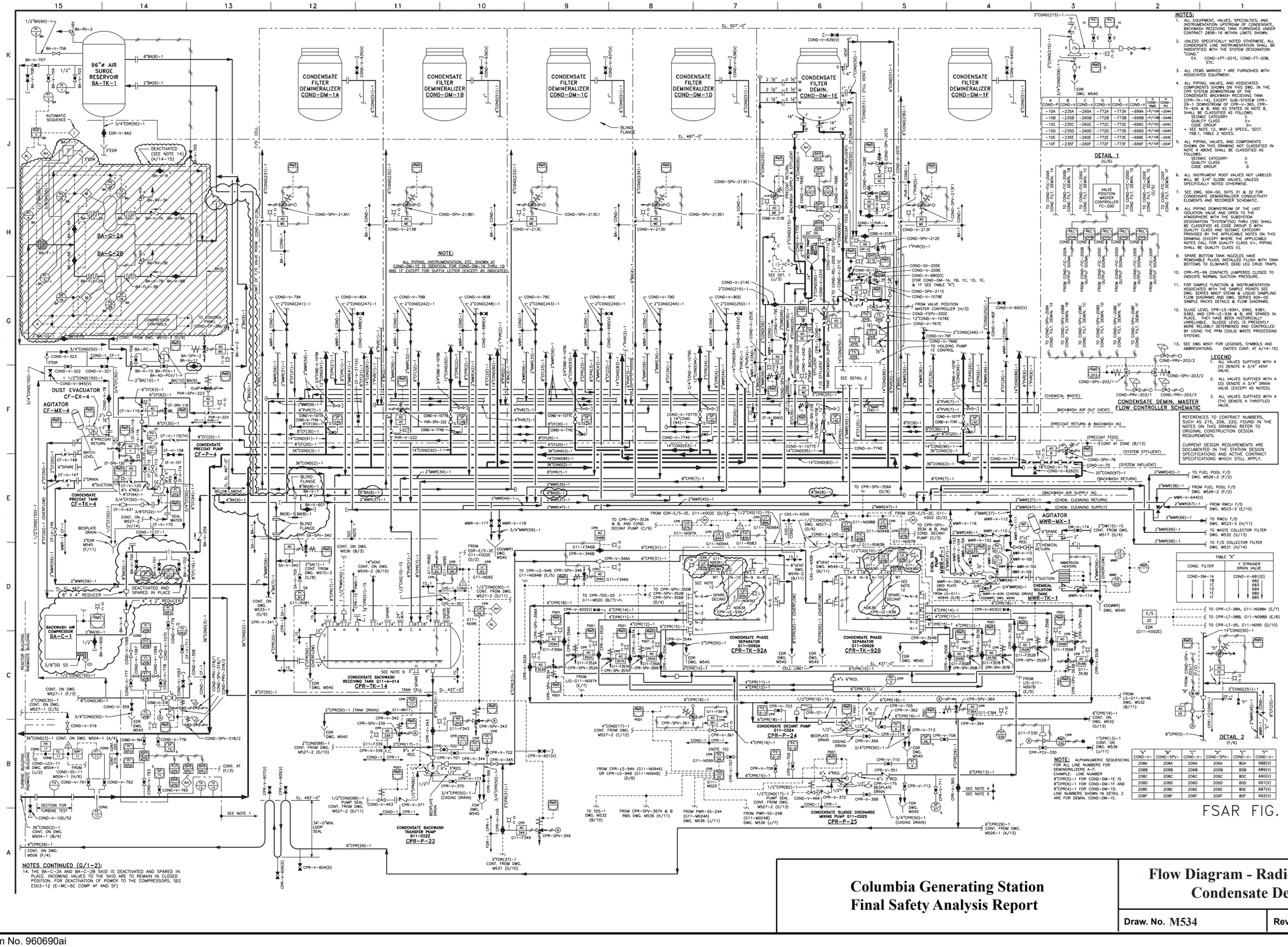
96"ø AIR SURGE RESERVOIR BA-TK-1
CONDENSATE FILTER DEMINERALIZER COND-DM-1A
CONDENSATE FILTER DEMINERALIZER COND-DM-1B
CONDENSATE FILTER DEMINERALIZER COND-DM-1C
CONDENSATE FILTER DEMINERALIZER COND-DM-1D
CONDENSATE FILTER DEMIN. COND-DM-1E
CONDENSATE FILTER DEMINERALIZER COND-DM-1F
BA-C-2A
BA-C-2B
DUST EVACUATOR CF-EX-4
AGITATOR CF-MX-4
CONDENSATE PRECOAT TANK CF-TK-4
CONDENSATE PRECOAT PUMP CF-P-4
BACKWASH AIR COMPRESSOR BA-C-1
CONDENSATE BACKWASH RECEIVING TANK G11-A-014 CPR-TK-14
CONDENSATE BACKWASH TRANSFER PUMP G11-C022 CPR-P-22
CONDENSATE PHASE SEPARATOR G11-D0092A CPR-TK-92A
CONDENSATE PHASE SEPARATOR G11-D0092B CPR-TK-92B
CONDENSATE DECANT PUMP G11-C024 CPR-P-24
CONDENSATE SLUDGE DISCHARGE MIXING PUMP G11-C025 CPR-P-25
AGITATOR MWR-MX-1
CHEMICAL SOLUTION TANK MWR-TK-1
DEACTIVATED (SEE NOTE 14) (A/14-15)
DEACTIVATED AND SPARED IN PLACE
SPARE
BLIND FLANGE
BLOWDOWN
SKID
LIMIT OF F/D VALVE ROOM COND-C-21A
CELL F/D
EL. 507'-0"
EL. 487'-0"
EL. 437'-0"
EL. 492'-0"
TANK CELL
CELL LIMIT
REACTOR BUILDING
RADWASTE BUILDING
TURBINE BUILDING
NOTE:
ALL PIPING, INSTRUMENTATION, ETC. SHOWN AT COND-DM-1E IS IDENTICAL FOR COND-DM-1A THRU 1D AND 1F EXCEPT FOR SUFFIX LETTER (EXCEPT AS INDICATED).
DETAIL 1 (G/6)
VALVE POSITION MASTER CONTROLLER FC-200
CONDENSATE DEMIN. MASTER FLOW CONTROLLER SCHEMATIC
DETAIL 2 (F/6)
SEE DETAIL 1 (J/3)
SEE DETAIL 2
SEE NOTE 1
SEE NOTE 4
SEE NOTE 5
SEE NOTE 9
SEE NOTE 10
SEE NOTE 12
CONT. FROM DWG. M510-3 (D/9)
CONT. ON DWG. M527-2 (H/14)
CONT. ON DWG. M536 (B/3)
CONT. ON DWG. M533-1 (G/6)
CONT. ON DWG. M527-1 (F/3)
CONT. ON DWG. M504-1 (A/4)
CONT. ON DWG. M506 (F/4)
CONT. AT (F/3)
TO CONTROL PANEL COND-CP-204J
TO CPR-SPV-356A (D/9)
TO FUEL POOL F/D DWG. M526-2 (F/2)
FROM FUEL POOL F/D DWG. M526-2 (F/2)
TO RWCU F/D DWG. M523-3 (E/10)
FROM RWCU F/D DWG. M523-3 (H/11)
TO WASTE COLLECTOR FILTER DWG. M532 (G/13)
TO F/D COLLECTOR FILTER DWG. M531 (H/14)
TO CPR-LT-98A, G11-N098A (E/7)
TO CPR-LT-98B, G11-N098B (E/6)
TO CPR-LT-95, G11-N095 (D/10)
FROM LS-G11-N146 DWG. M532 (B/11)
FROM LIS-G11-N097A (E/7)
FROM LS-G11-N097B (E/5)
FROM PWR-SS-24A (G11-M024A) DWG. M536 (J/11)
FROM CPR-SPV-367A & B RMS DWG. M536 (K/11)
TO TDS-* DWG. M532 (B/10)
FROM PWR-SS-24B (G11-M024B) DWG. M536 (J/7)
FROM EDR-E/S-2E, G11-K002E (D/2)
FROM EDR-E/S-2C, G11-K002C (D/2)
TO CPR-SPV-353A & B, AND COND. DECANT PUMP (C/9)
TO CPR-SPV-353A & B, AND COND. DECANT PUMP (C/3)
TO CPR-LS-94B CPR-SPV-346A G11-N094B (E/5)
TO CPR-SPV-350B CPR-SPV-352B CPR-SPV-356B (D/4)
TO CPR-TDS-20 G11-M020 (B/7)
FROM CPR-LS-94A (G11-N094A) OR CPR-LS-94B (G11-N094B) (D/8)
FROM EDR-E/S-2E, G11-K002E (D/2)
FROM EDR-E/S-2C, G11-K002C (D/2)
FROM COND-SPV-213A1
FROM COND-SPV-213B1
FROM COND-SPV-213C1
FROM COND-SPV-213D1
FROM COND-SPV-213E1
FROM COND-SPV-213F1
FROM COND-SPV-203/1
FROM COND-SPV-203/2
FROM COND-SPV-203/3
TO COND-SPV-208A COND-T/C1 DEMIN. 1A
TO COND-SPV-208B COND-T/C1 DEMIN. 1B
TO COND-SPV-208C COND-T/C1 DEMIN. 1C
TO COND-SPV-208D COND-T/C1 DEMIN. 1D
TO COND-SPV-208E COND-T/C1 DEMIN. 1E
TO COND-SPV-208F COND-T/C1 DEMIN. 1F
TO COND-FIC-200A COND-T/C1 DEMIN. 1A
TO COND-FIC-200B COND-T/C1 DEMIN. 1B
TO COND-FIC-200C COND-T/C1 DEMIN. 1C
TO COND-FIC-200D COND-T/C1 DEMIN. 1D
TO COND-FIC-200E COND-T/C1 DEMIN. 1E
TO COND-FIC-200F COND-T/C1 DEMIN. 1F
FROM COND-FIC-200A OUTPUT SIGNAL
FROM COND-FIC-200B OUTPUT SIGNAL
FROM COND-FIC-200C OUTPUT SIGNAL
FROM COND-FIC-200D OUTPUT SIGNAL
FROM COND-FIC-200E OUTPUT SIGNAL
FROM COND-FIC-200F OUTPUT SIGNAL
(CHEMICAL WASTE)
BACKWASH AIR OUT (VENT)
(PRECOAT RETURN & BACKWASH IN)
(PRECOAT FEED)
(SYSTEM EFFLUENT)
(SYSTEM INFLUENT)
(BACKWASH RETURN)
(BACKWASH AIR SUPPLY IN)
(CHEM. CLEANING RETURN)
(CHEM. CLEANING SUPPLY)
BACKWASH AIR SUPPLY
BACKWASH RETURN & INFLUENT
PRECOAT FEED & EFFLUENT
BACKWASH SUPPLY & EFFLUENT
BACKWASH SUPPLY
BACKWASH RECEIVING
BACKWASH RECEIVING TANK
BACKWASH TRANSFER PUMP
CONDENSATE DECANT PUMP
CONDENSATE PHASE SEPARATOR
CONDENSATE BACKWASH RECEIVING TANK
CONDENSATE BACKWASH TRANSFER PUMP
CONDENSATE PRECOAT PUMP
CONDENSATE PRECOAT TANK
BEDPLATE DRAIN
BEDPLATE PURGE
CASING DRAIN
CASING VENT
SEAL WATER
IMMERSION HEATERS
CHEM. SOL. PUMP MWR-P-1
TABLE "A"
Y STRAINER DRAIN VALVE
COND. FILTER
COND-DM-1A 1B 1C 1D 1E 1F
COND-V-681(D) 682 683 684 685 686
COND-V-692(V)
COND-V-693(V)
COND-V-694(V)
COND-V-695(V)
COND-V-696(V)
COND-V-697(V)
COND-V-698(V)
COND-V-699(V)
COND-V-700(V)
COND-V-701(V)
COND-V-702(V)
COND-V-703(V)
COND-V-704(V)
COND-V-705(V)
COND-V-706(V)
COND-V-707(V)
COND-V-708(V)
COND-V-709(V)
COND-V-710(V)
COND-V-711(V)
COND-V-712(V)
COND-V-713(V)
COND-V-714(V)
COND-V-715(V)
COND-V-716(V)
COND-V-717(V)
COND-V-718(V)
COND-V-719(V)
COND-V-720(V)
COND-V-721(V)
COND-V-722(V)
COND-V-723(V)
COND-V-724(V)
COND-V-725(V)
COND-V-726(V)
COND-V-727(V)
COND-V-728(V)
COND-V-729(V)
COND-V-730(V)
COND-V-731(V)
COND-V-732(V)
COND-V-733(V)
COND-V-734(V)
COND-V-735(V)
COND-V-736(V)
COND-V-737(V)
COND-V-738(V)
COND-V-739(V)
COND-V-740(V)
COND-V-741(V)
COND-V-742(V)
COND-V-743(V)
COND-V-744(V)
COND-V-745(V)
COND-V-746(V)
COND-V-747(V)
COND-V-748(V)
COND-V-749(V)
COND-V-750(V)
COND-V-751(V)
COND-V-752(V)
COND-V-753(V)
COND-V-754(V)
COND-V-755(V)
COND-V-756(V)
COND-V-757(V)
COND-V-758(V)
COND-V-759(V)
COND-V-760(V)
COND-V-761(V)
COND-V-762(V)
COND-V-763(V)
COND-V-764(V)
COND-V-765(V)
COND-V-766(V)
COND-V-767(V)
COND-V-768(V)
COND-V-769(V)
COND-V-770(V)
COND-V-771(V)
COND-V-772(V)
COND-V-773(V)
COND-V-774(V)
COND-V-775(V)
COND-V-776(V)
COND-V-777(V)
COND-V-778(V)
COND-V-779(V)
COND-V-780(V)
COND-V-781(V)
COND-V-782(V)
COND-V-783(V)
COND-V-784(V)
COND-V-785(V)
COND-V-786(V)
COND-V-787(V)
COND-V-788(V)
COND-V-789(V)
COND-V-790(V)
COND-V-791(V)
COND-V-792(V)
COND-V-793(V)
COND-V-794(V)
COND-V-795(V)
COND-V-796(V)
COND-V-797(V)
COND-V-798(V)
COND-V-799(V)
COND-V-800(V)
COND-V-801(V)
COND-V-802(V)
COND-V-803(V)
COND-V-804(V)
COND-V-805(V)
COND-V-806(V)
COND-V-807(V)
COND-V-808(V)
COND-V-809(V)
COND-V-810(V)
COND-V-811(V)
COND-V-812(V)
COND-V-813(V)
COND-V-814(V)
COND-V-815(V)
COND-V-816(V)
COND-V-817(V)
COND-V-818(V)
COND-V-819(V)
COND-V-820(V)
COND-V-821(V)
COND-V-822(V)
COND-V-823(V)
COND-V-824(V)
COND-V-825(V)
COND-V-826(D)
COND-V-827(V)
COND-V-828(V)
COND-V-829(V)
COND-V-830(V)
COND-V-831(V)
COND-V-832(V)
COND-V-833(V)
COND-V-834(V)
COND-V-835(V)
COND-V-836(V)
COND-V-837(V)
COND-V-838(V)
COND-V-839(V)
COND-V-840(V)
COND-V-841(V)
COND-V-842(V)
COND-V-843(V)
COND-V-844(V)
COND-V-845(V)
COND-V-846(V)
COND-V-847(V)
COND-V-848(V)
COND-V-849(V)
COND-V-850(V)
COND-V-851(V)
COND-V-852(V)
COND-V-853(V)
COND-V-854(V)
COND-V-855(V)
COND-V-856(V)
COND-V-857(V)
COND-V-858(V)
COND-V-859(V)
COND-V-860(V)
COND-V-861(V)
COND-V-862(V)
COND-V-863(V)
COND-V-864(V)
COND-V-865(V)
COND-V-866(V)

HEATER	"A" (VENT)	"B" (DRAIN)	"C" (RELIEF)
COND-HX-1A,B,C	COND-V-127A,B,C	COND-V-128A,B,C	COND-RV-177A,B,C
COND-HX-2A,B,C	COND-V-165A,B,C	COND-V-133A,B,C (NOTE 14)	COND-RV-178A,B,C
COND-HX-3A,B,C	COND-V-137A,B,C	COND-V-139A,B,C	COND-RV-179A,B,C
COND-HX-4A,B,C	COND-V-138A,B,C	COND-V-139A,B,C (NOTE 14)	COND-RV-180A,B,C
COND-HX-5A,B	COND-V-143A,B	COND-V-132A,B	COND-RV-181A,B

NOTES:

1. ALL TEMPERATURE WELL CONNECTIONS TO BE 1 1/2" UNLESS SPECIFICALLY NOTED OTHERWISE.
2. ALL INSTRUMENTATION ON THIS DWG. TO BE IDENTIFIED BY PREFIX "COND" UP TO THE SUCTION SIDE OF THE REACTOR FEED PUMPS & BY PREFIX "RFW" ON THE DISCHARGE SIDE OF THE REACTOR FEED PUMPS.
3. ALL INSTRUMENT ROOT VALVES NOT LABELED WILL BE 3/4" GLOBE VALVES UNLESS SPECIFICALLY NOTED OTHERWISE.
4. ALL ITEMS MARKED ▽ ARE FURNISHED WITH ASSOCIATED EQUIPMENT.
5. ALL PIPING, VALVES, AND ASSOCIATED COMPONENTS SHOWN ON THIS DRAWING SHALL BE CLASSIFIED AS FOLLOWS:
   QUALITY CLASS II
   SEISMIC CATEGORY II
   CODE GROUP D
6. ◯ INDICATES CONDENSER NOZZLE CONNECTION ITEM NUMBERS AS SHOWN ON WECO DWG. 731J185 SH. 1, 2, & 3 (CVI 08-00, 3, 1; 2; & 3).
7. THESE COMPUTER INPUT POINTS ARE NOT USED.
8. WHEN TX-7A IS TO BE USED, TE-N24A OR C SHALL BE UNSCREWED, AND TX-7A CAN BE INSERTED FOR ITS INPUT USE. AFTER USING TX-7A, REMOVE AND RE-INSERT THE "TE" WHICH WAS REMOVED.
9. VALVE SPA-V-1084, FORMERLY RFW-FCV-15, HAS HAD INTERNALS REMOVED AND WILL REMAIN INSTALLED IN A NON-FUNCTIONAL STATUS.
10. FOR CONDENSATE BOOSTER PUMP LUBE OIL SUMP LEVEL INDICATORS COND-LI-2A, 2B, & 2C SEE CVI 11A-99.7.
11. FOR GLAND SEAL & EJECTOR SYSTEM, SEE CVI 12-00.16. FOR UNIT OIL & CONTROL DIAGRAM, SEE M985-1 & M985-2.
12. FOR PUMP OR TURBINE THERMOCOUPLES AND THEIR INPUTS TO RFW-TR-1, SEE RECORDER DEVELOPMENT ON EWD-721-017. FOR ADDITIONAL THERMOCOUPLES CONNECTED TO RFW-TR-1, SEE M985-1 (B/2,6) & M985-2 (B/12,6).
13. VALVE COND-PCV-32A HAS CONTROLLER REMOVED AND IS LEFT IN THE OPEN POSITION.
14. COND-V-133A AND COND-V-139B HAVE THE DRAIN LINE TEMPORARILY CAPPED TO STOP VALVE LEAK BY.
15. WIRELESS TRANSMISSION TO RFW-RCVR -6A/6B/5A/5B, 902 TO 928 MHz FHSS, 31 MW MAX. RF POWER OUTPUT, ANTENNA GAIN IS 0.44 DBI, BASE RADIO SHALL HAVE AN EXCLUSION DISTANCE OF 1'-0" MIN. TO ELECTRICAL COMPONENTS.
16. WIRELESS TRANSMISSION TO COND-RCVR -3, FROM COND-TT-3 & COND-TT-42, 902 TO 928 MHz FHSS, 31 mW MAX. RF POWER OUTPUT, ANTENNA GAIN IS 0.44 DBI, BASE RADIO SHALL HAVE AN EXCLUSION DISTANCE OF 1'-0" MIN. TO ELECTRICAL COMPONENTS.
17. SEE DWG M501 FOR FLOW DIAGRAM LEGENDS, SYMBOLS AND ABBREVIATIONS.
18. RFW-V-102A PRESSURE LOCKING RELIEF HOLE ON DOWN-STREAM SIDE OF WEDGE ALLOWS ISOLATION ON UP-STREAM SIDE ONLY.
19. RFW-V-1028 PRESSURE LOCKING BYPASS ALLOWS ISOLATION ON UP-STREAM SIDE ONLY.

LEGEND:

1. ALL VALVES SUFFIXED WITH A (V) DENOTE A 3/4" VENT VALVE.
2. ALL VALVES SUFFIXED WITH A (D) DENOTE A 3/4" DRAIN VALVE (EXCEPT WHERE NOTED).
3. ALL VALVES SUFFIXED WITH A (TH) DENOTE A THROTTLED VALVE.

REFERENCES TO CONTRACT NUMBERS, SUCH AS 215, 206, 220, FOUND IN THE NOTES ON THIS DRAWING REFER TO ORIGINAL CONSTRUCTION DESIGN REQUIREMENTS.

CURRENT DESIGN REQUIREMENTS ARE DOCUMENTED IN THE STATION DESIGN SPECIFICATIONS AND ACTIVE CONTRACT SPECIFICATIONS WHICH STILL APPLY.

FSAR FIG.

Columbia Generating Station
Final Safety Analysis Report

Flow Diagram - Condensate and Feedwater Systems

Draw. No. M504-1	Rev. 116	Figure 10.4-6.1

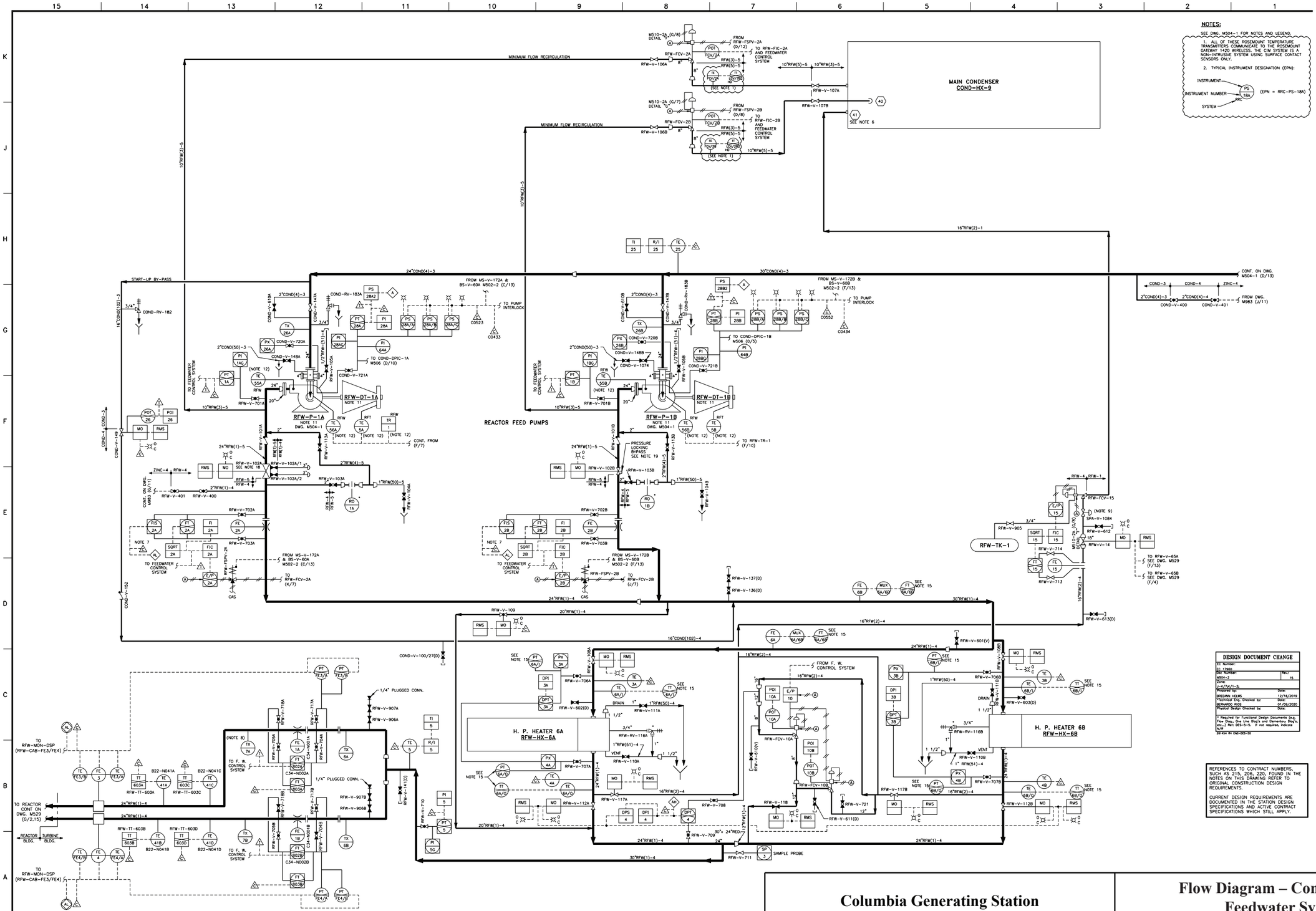

Columbia Generating Station
Final Safety Analysis Report

Flow Diagram – Condensate and Feedwater Systems

Draw. No. M504-2 | Rev. 16 | Figure 10.4-6.2

NOTES:

1. SEE DWG. M504-1 FOR NOTES AND LEGEN

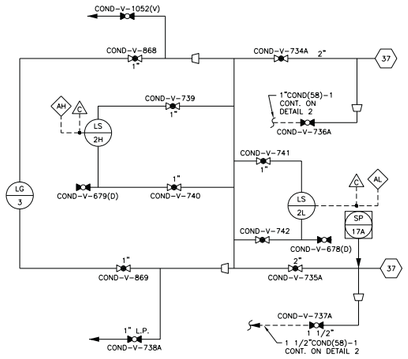

DETAIL 1A

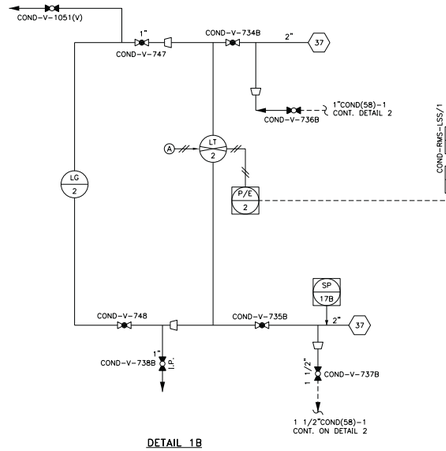

DETAIL 1B

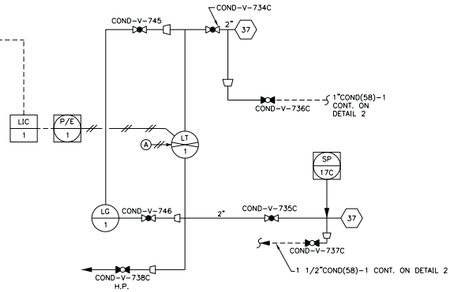

DETAIL 1C

LEVEL CONTROL ARRGT. AT CONDENSER HOTWELL

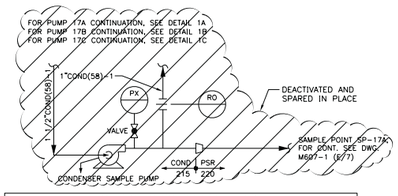

CONDENSER SAMPLE PUMP TAG NUMBERS					
PUMP No.	RO	SP	PX	VALVE	REMARKS
COND-P-17A	17A	17A	10A	COND-V-855A	PUMP IS NOT INSTALLED. PIPING IS SPARED IN PLACE.
COND-P-17B	17B	17B	10B	COND-V-855B	PUMP IS NOT INSTALLED. PIPING IS SPARED IN PLACE.
COND-P-17C	17C	17C	10C	COND-V-855C	PUMP IS NOT INSTALLED. PIPING IS SPARED IN PLACE.

DETAIL 2

Columbia Generating Station
Final Safety Analysis Report

Flow Diagram - Condensate and Feedwater Systems

Draw. No. M504-3 | Rev. 1 | Figure 10.4-6.3

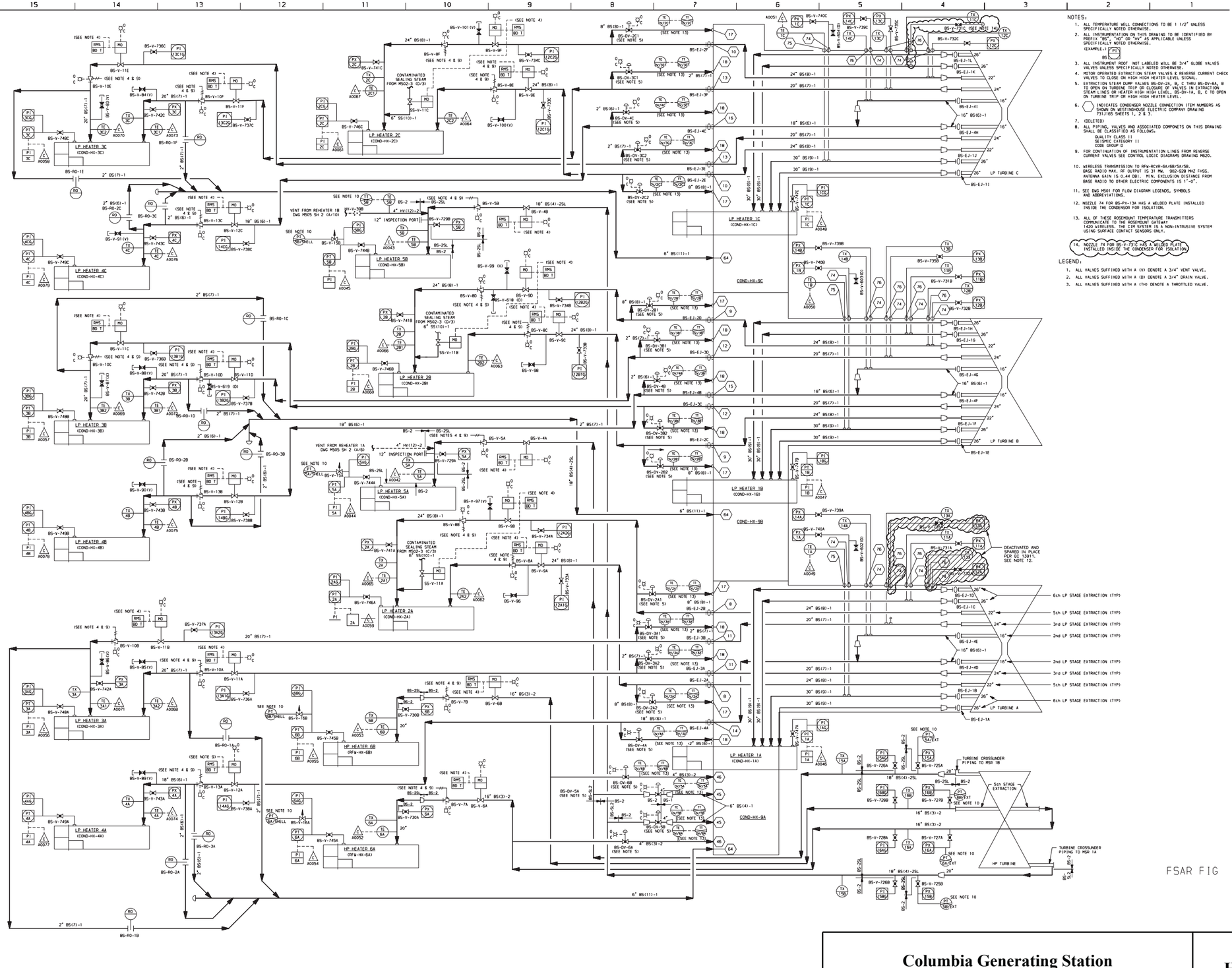

Columbia Generating Station **Final Safety Analysis Report**	**Flow Diagram - Extraction Steam and Heater Vents - Turbine Generator Building**	
	Draw. No. M503-1	Rev. 18 / Figure 10.4-7.1

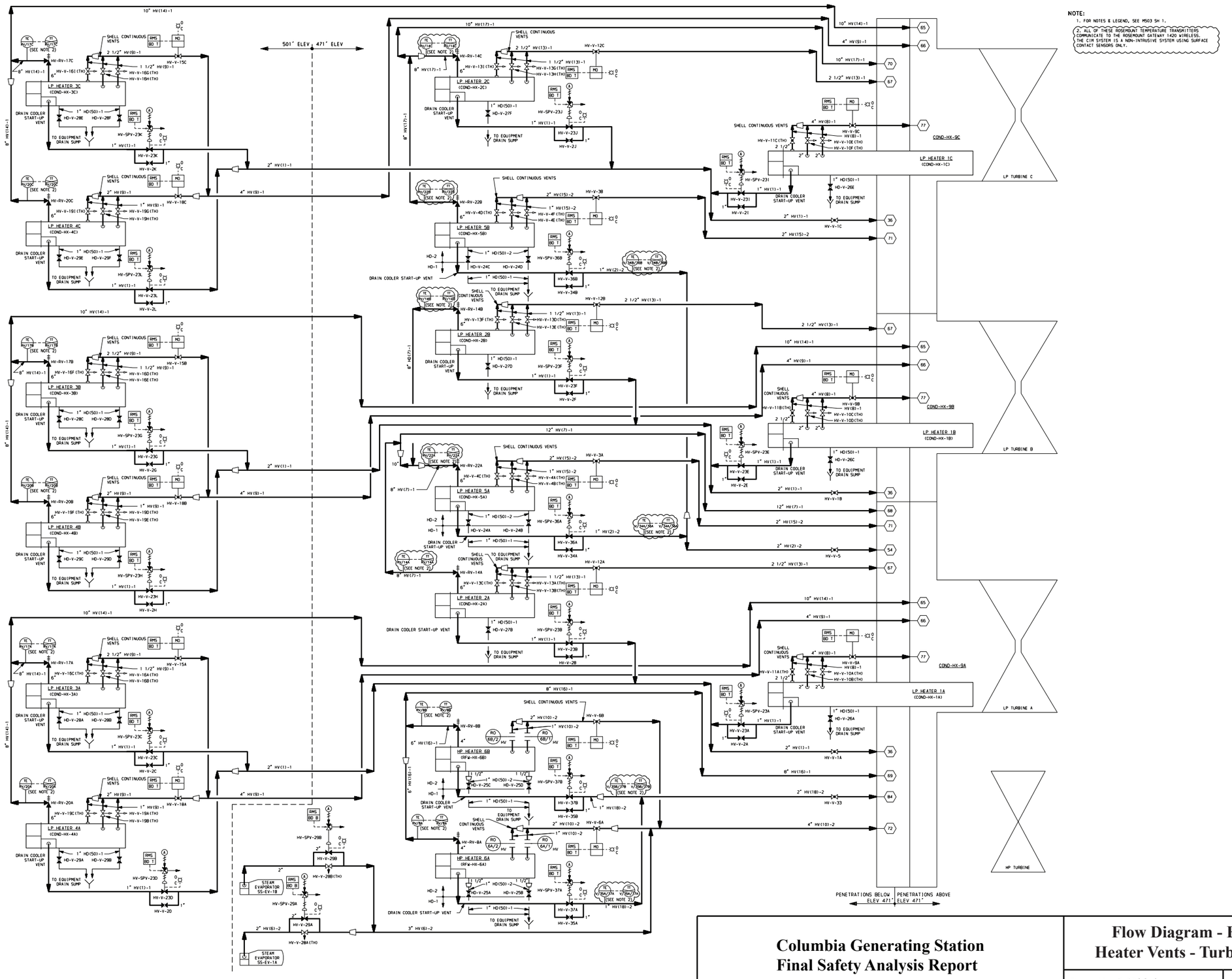

Columbia Generating Station
Final Safety Analysis Report

Flow Diagram - Extraction Steam and Heater Vents - Turbine Generator Building

Draw. No. M503-2	Rev. 6	Figure 10.4-7.2

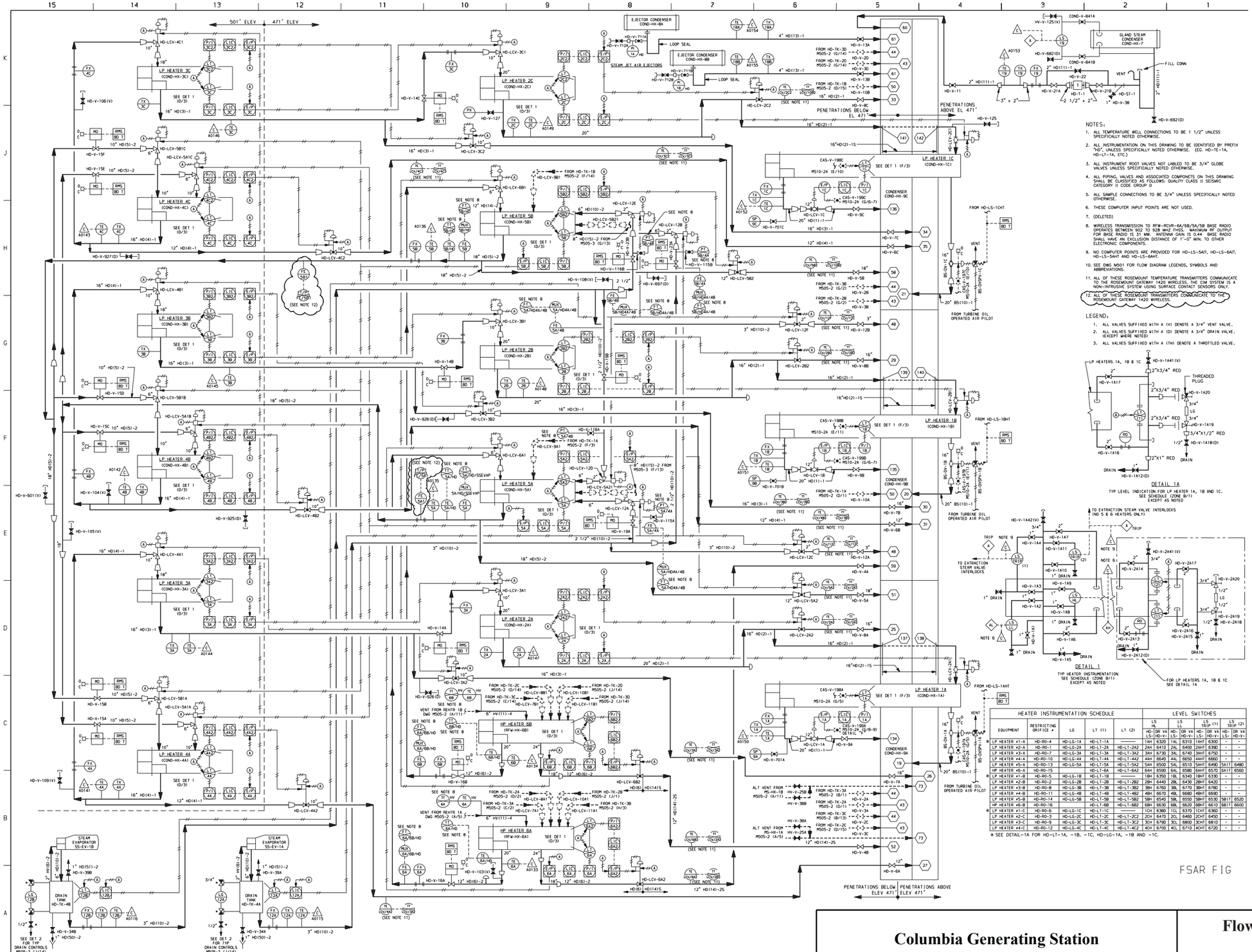

NOTES:

1. ALL TEMPERATURE WELL CONNECTIONS TO BE 1 1/2" UNLESS SPECIFICALLY NOTED OTHERWISE.
2. ALL INSTRUMENTATION ON THIS DRAWING TO BE IDENTIFIED BY PREFIX "HD", UNLESS SPECIFICALLY NOTED OTHERWISE. (EG. HD-TE-1A, HD-LT-1A, ETC.)
3. ALL INSTRUMENT ROOT VALVES NOT LABLED TO BE 3/4" GLOBE VALVES UNLESS SPECIFICALLY NOTED OTHERWISE.
4. ALL PIPING, VALVES AND ASSOCIATED COMPONETS ON THIS DRAWING SHALL BE CLASSIFIED AS FOLLOWS: QUALITY CLASS II SEISMIC CATEGORY II CODE GROUP D.
5. ALL SAMPLE CONNECTIONS TO BE 3/4" UNLESS SPECIFICALLY NOTED OTHERWISE.
6. THESE COMPUTER INPUT POINTS ARE NOT USED.
7. (DELETED)
8. WIRELESS TRANSMISSION TO RFW-RCVR-6A/6B/5A/5B BASE RADIO OPERATES BETWEEN 902 TO 928 MHZ FHSS. MAXIMUM RF OUTPUT FOR BASE RADIO IS 31 MW. ANTENNA GAIN IS 0.44 BASE RADIO SHALL HAVE AN EXCLUSION DISTANCE OF 1'-0" MIN. TO OTHER ELECTRONIC COMPONENTS.
9. NO COMPUTER POINTS ARE PROVIDED FOR HD-LS-5AIT, HD-LS-6AIT, HD-LS-5AHT AND HD-LS-6AHT.
10. SEE DWG M501 FOR FLOW DIAGRAM LEGENDS, SYMBOLS AND ABBREVIATIONS.
11. ALL OF THESE ROSEMOUNT TEMPERATURE TRANSMITTERS COMMUNICATE TO THE ROSEMOUNT GATEWAY 1420 WIRELESS. THE CIM SYSTEM IS A NON-INTRUSIVE SYSTEM USING SURFACE CONTACT SENSORS ONLY.
12. ALL OF THESE ROSEMOUNT TRANSMITTERS COMMUNICATE TO THE ROSEMOUNT GATEWAY 1420 WIRELESS.

LEGEND:

1. ALL VALVES SUFFIXED WITH A (V) DENOTE A 3/4" VENT VALVE.
2. ALL VALVES SUFFIXED WITH A (D) DENOTE A 3/4" DRAIN VALVE. (EXCEPT WHERE NOTED)
3. ALL VALVES SUFFIXED WITH A (TH) DENOTE A THROTTLED VALVE.

HEATER INSTRUMENTATION SCHEDULE					LEVEL SWITCHES					
					LS HI	LS LO	LS TRIP (1)	LS TRIP (2)		
EQUIPMENT	RESTRICTING ORIFICE ✔	LG	LT (1)	LT (2)	HD-LS- DR VA	HD-LS- DR VA	HD-LS- DR VA	HD-LS- DR VA		
LP HEATER #1-A	HD-RO-4	HD-LG-1A	HD-LT-1A	———	1AH 6320	1AL 6310	1AHT 6300	- -		
LP HEATER #2-A	HD-RO-1	HD-LG-2A	HD-LT-2A	HD-LT-2A2	2AH 6410	2AL 6400	2AHT 6390	- -		
LP HEATER #3-A	HD-RO-7	HD-LG-3A	HD-LT-3A	HD-LT-3A2	3AH 6710	3AL 6740	3AHT 6750	- -		
LP HEATER #4-A	HD-RO-10	HD-LG-4A	HD-LT-4A	HD-LT-4A2	4AH 6540	4AL 6650	4AHT 6660	- -		
LP HEATER #5-A	HD-RO-13	HD-LG-5A	HD-LT-5A	HD-LT-5A2	5AH 6500	5AL 6510	5AHT 6490	5AIT 6480		
HP HEATER #6-A	HD-RO-15	———	HD-LT-6A	HD-LT-6A2	6AH 6590	6AL 6580	6AHT 6570	6AIT 6560		
* LP HEATER #1-B	HD-RO-5	HD-LG-1B	HD-LT-1B	———	1BH 6350	1BL 6340	1BHT 6330	- -		
LP HEATER #2-B	HD-RO-2	HD-LG-2B	HD-LT-2B	HD-LT-2B2	2BH 6440	2BL 6430	2BHT 6420	- -		
LP HEATER #3-B	HD-RO-8	HD-LG-3B	HD-LT-3B	HD-LT-3B2	3BH 6760	3BL 6770	3BHT 6780	- -		
LP HEATER #4-B	HD-RO-11	HD-LG-4B	HD-LT-4B	HD-LT-4B2	4BH 6670	4BL 6680	4BHT 6690	- -		
LP HEATER #5-B	HD-RO-14	HD-LG-5B	HD-LT-5B	HD-LT-5B2	5BH 6540	5BL 6550	5BHT 6530	5BIT 6520		
HP HEATER #6-B	HD-RO-16	———	HD-LT-6B	HD-LT-6B2	6BH 6630	6BL 6620	6BHT 6610	6BIT 6600		
* LP HEATER #1-C	HD-RO-6	HD-LG-1C	HD-LT-1C	———	1CH 6380	1CL 6370	1CHT 6360	- -		
LP HEATER #2-C	HD-RO-3	HD-LG-2C	HD-LT-2C	HD-LT-2C2	2CH 6470	2CL 6460	2CHT 6450	- -		
LP HEATER #3-C	HD-RO-9	HD-LG-3C	HD-LT-3C	HD-LT-3C2	3CH 6790	3CL 6800	3CHT 6810	- -		
LP HEATER #4-C	HD-RO-12	HD-LG-4C	HD-LT-4C	HD-LT-4C2	4CH 6700	4CL 6710	4CHT 6720	- -		

* SEE DETAIL-1A FOR HD-LT-1A, -1B, -1C, HD-LG-1A, -1B AND -1C.

FSAR FIG

Columbia Generating Station
Final Safety Analysis Report

Flow Diagram - Heater Drain System - Turbine Generator Building

Draw. No. M505-1	Rev. 23	Figure 10.4-8.1

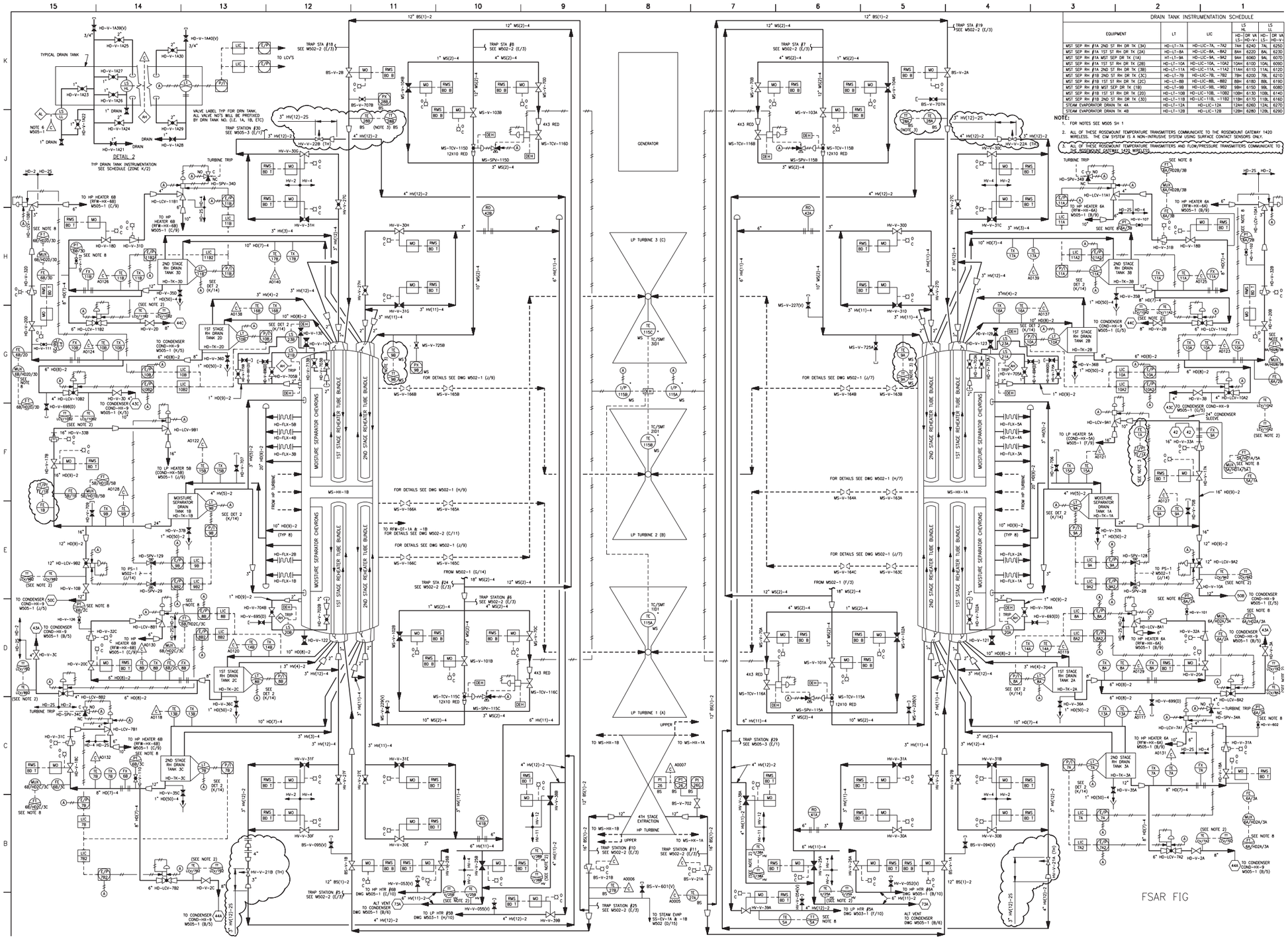

Columbia Generating Station
Final Safety Analysis Report

Flow Diagram – Heater Drain System – Turbine Generator Building

Draw. No. M505-2	Rev. 18	Figure 10.4-8.2

Form No. 960690ai

NOTE:
1. FOR GENERAL NOTES SEE M505-1.
2. ALL OF THESE ROSEMOUNT TEMPERATURE TRANSMITTERS COMMUNICATE TO THE ROSEMOUNT GATEWAY 1420 WIRELESS. THE CIM SYSTEM IS A NON-INTRUSIVE SYSTEM USING SURFACE CONTACT SENSORS ONLY.

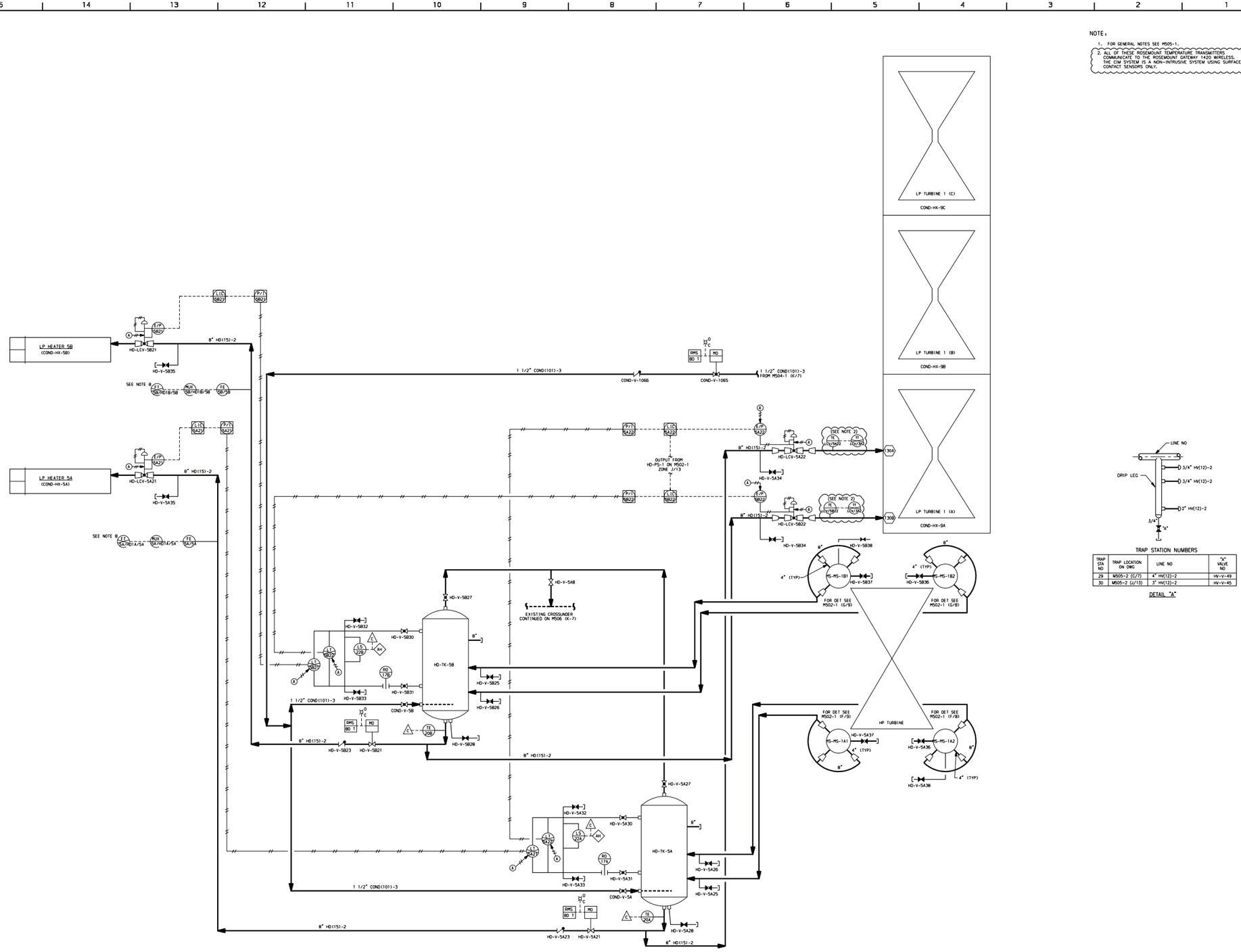

TRAP STATION NUMBERS

TRAP STA NO	TRAP LOCATION ON DWG	LINE NO	"A" VALVE NO
29	M505-2 (C/7)	4" HV(12)-2	HV-V-49
30	M505-2 (J/13)	3" HV(12)-2	HV-V-45

DETAIL "A"

Columbia Generating Station
Final Safety Analysis Report

Flow Diagram - Heater Drain System - Turbine Generator Building

Draw. No. M505-3 | Rev. 10 | Figure 10.4-8.3

NOTES:

1. ALL PIPING, VALVES, AND ASSOCIATED COMPONENTS IN THE HYDROGEN WATER CHEMISTRY SYSTEM (HWC) ON THIS DRAWING IS CLASSIFIED AS FOLLOWS:
   -QUALITY CLASS: II
   -SEISMIC DATACORY: II
   -CODE GROUP: D
2. ALL INSTRUMENTATION ON THIS DWG TO BE "HWC" UNLESS OTHERWISE NOTED.
3. SEE DWG M001 FOR FLOW DIAGRAM LEGENDS, SYMBOLS AND ABBREVIATIONS.

LEGEND:

1. ALL VALVES SUFFIXED WITH A (TH) DENOTE A THROTTLED VALVE.

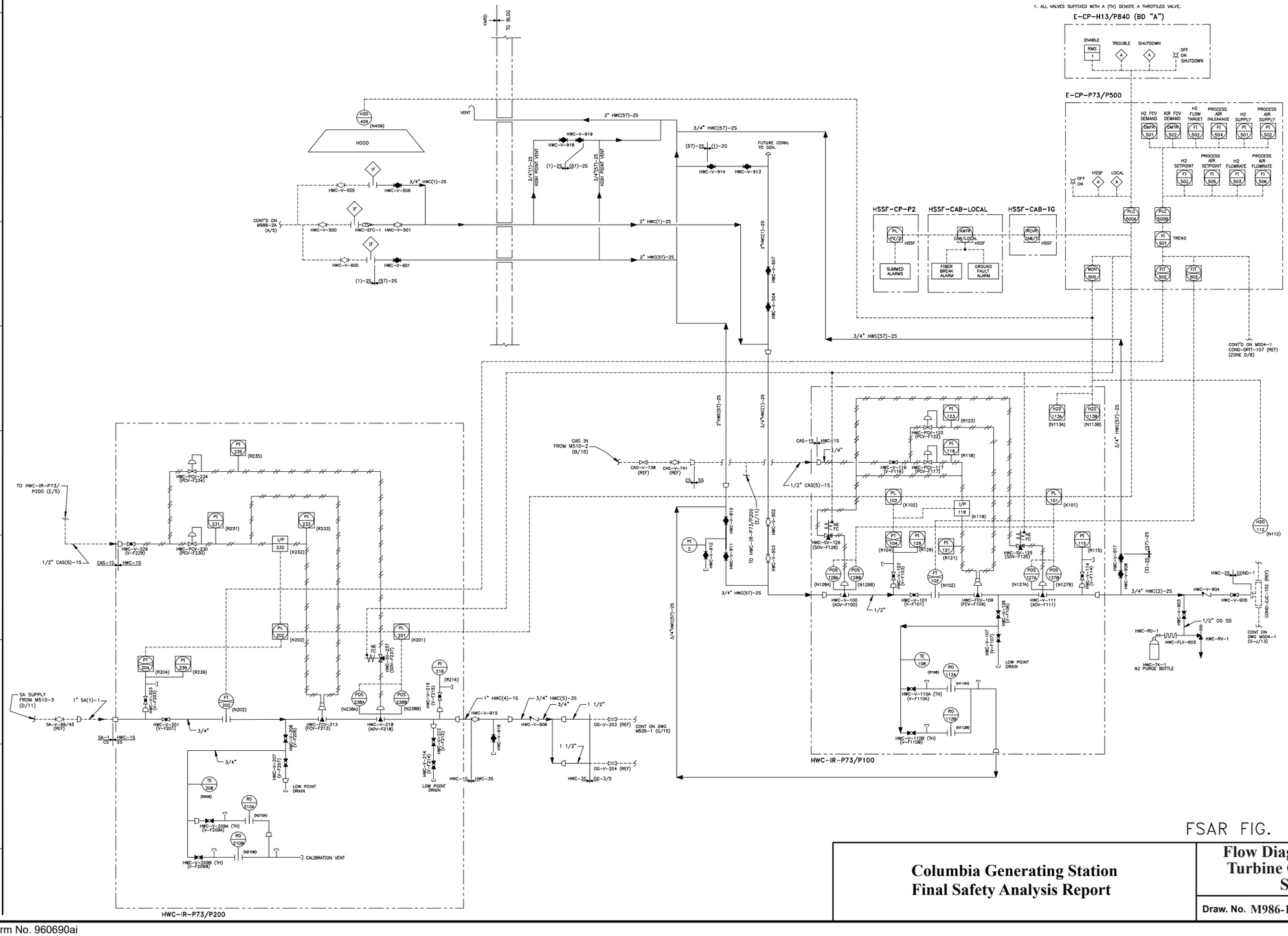

FSAR FIG.

Columbia Generating Station Final Safety Analysis Report	Flow Diagram - Hydrogen Water Chemistry Turbine Generator Building and Hydrogen Storage and Supply Facility		
	Draw. No. M986-1	Rev. 5	Figure 10.4-9.1

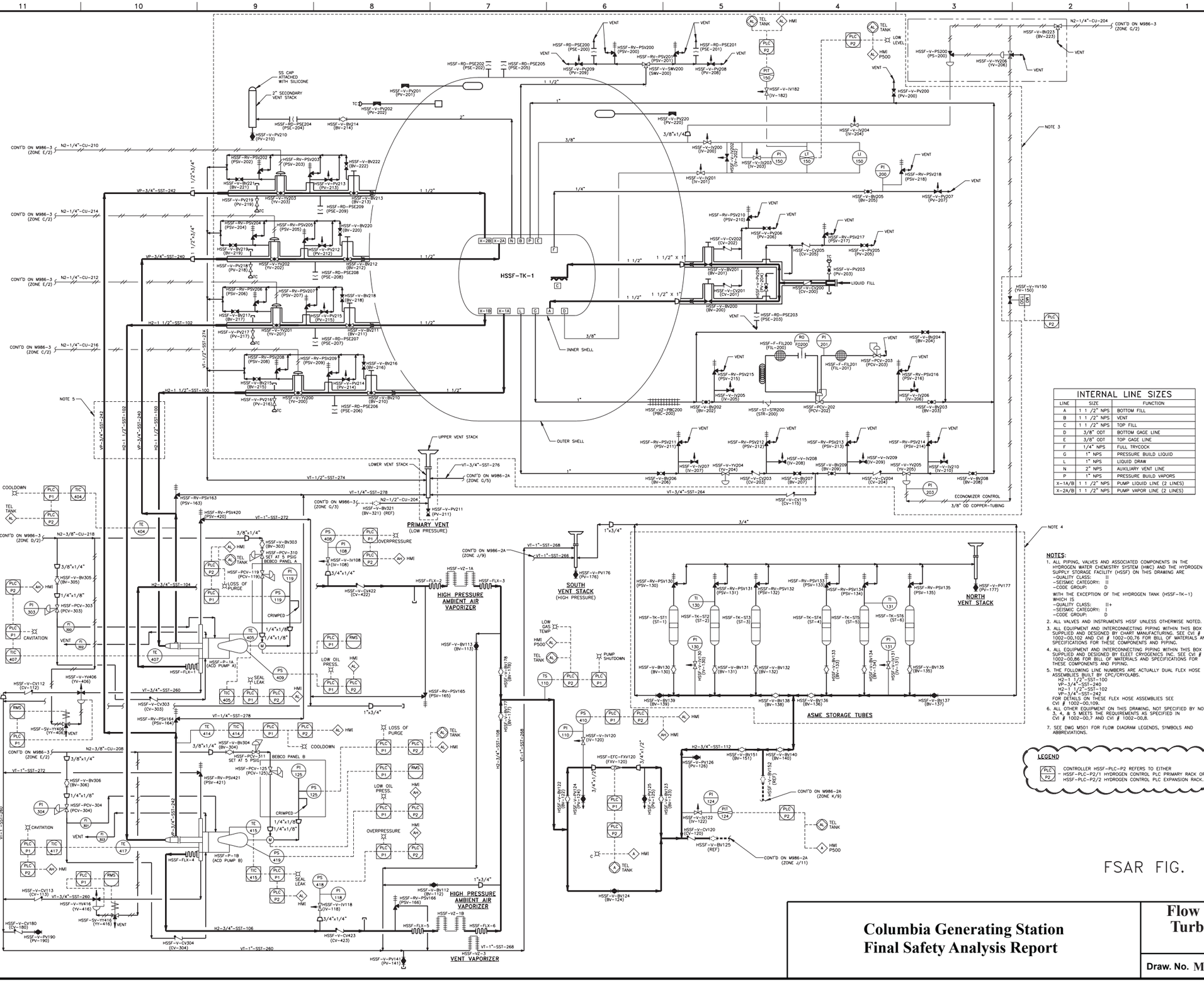
HSSF-TK-1
INNER SHELL
OUTER SHELL
SS CAP ATTACHED WITH SILICONE
2" SECONDARY VENT STACK
UPPER VENT STACK
LOWER VENT STACK
PRIMARY VENT (LOW PRESSURE)
SOUTH VENT STACK (HIGH PRESSURE)
NORTH VENT STACK
HIGH PRESSURE AMBIENT AIR VAPORIZER
HIGH PRESSURE AMBIENT AIR VAPORIZER
VENT VAPORIZER
ASME STORAGE TUBES
LIQUID FILL
ECONOMIZER CONTROL
3/8" OD COPPER-TUBING
LOW GAS TEMP
PUMP SHUTDOWN
LOW OIL PRESS.
OVERPRESSURE
LOSS OF PURGE
COOLDOWN
CAVITATION
SEAL LEAK
BEBCO PANEL A
BEBCO PANEL B
HSSF-P-1A (ACD PUMP A)
HSSF-P-1B (ACD PUMP B)
CONT'D ON M986-3 (ZONE E/2)
CONT'D ON M986-3 (ZONE C/2)
CONT'D ON M986-3 (ZONE C/2)
CONT'D ON M986-3 (ZONE E/2)
CONT'D ON M986-3 (ZONE C/2)
CONT'D ON M986-3 (ZONE D/2)
CONT'D ON M986-3 (ZONE E/2)
CONT'D ON M986-3 (ZONE G/3)
CONT'D ON M986-2A (ZONE G/5)
CONT'D ON M986-2A (ZONE J/9)
CONT'D ON M986-2A (ZONE K/9)
CONT'D ON M986-2A (ZONE J/11)
CONT'D ON M986-3 (ZONE G/2)
NOTE 3
NOTE 4
NOTE 5
HSSF-V-YY150 (YY-150)
HSSF-V-PV200 (PV-200)
HSSF-V-IV182 (IV-182)
HSSF-V-PV210 (PV-210)
HSSF-V-PV211 (PV-211)
HSSF-V-PV176 (PV-176)
HSSF-V-PV177 (PV-177)
HSSF-V-PV190 (PV-190)
HSSF-V-PV141 (PV-141)
HSSF-V-CV115 (CV-115)
HSSF-V-CV180 (CV-180)
HSSF-V-CV113 (CV-113)
HSSF-V-CV112 (CV-112)
HSSF-V-CV304 (CV-304)
HSSF-V-CV303 (CV-303)
HSSF-V-CV423 (CV-423)
HSSF-V-CV422 (CV-422)
HSSF-V-YY406 (YY-406)
HSSF-V-YY416 (YY-416)
HSSF-SY-YY406 (YY-406)
HSSF-SY-YY416 (YY-416)
HSSF-V-IV108 (IV-108)
HSSF-V-IV118 (IV-118)
HSSF-V-IV120 (IV-120)
HSSF-EFC-FXV120 (FXV-120)
HSSF-V-IV201 (IV-201)
HSSF-V-IV200 (IV-200)
HSSF-V-IV204 (IV-204)
HSSF-V-IV205 (IV-205)
HSSF-V-IV206 (IV-206)
HSSF-V-IV207 (IV-207)
HSSF-V-IV208 (IV-208)
HSSF-V-IV209 (IV-209)
HSSF-V-IV210 (IV-210)
HSSF-V-YV201 (YV-201)
HSSF-V-YV200 (YV-200)
HSSF-V-YV204 (YV-204)
HSSF-V-YV205 (YV-205)
HSSF-V-YV206 (YV-206)
HSSF-V-YV207 (YV-207)
HSSF-V-YV208 (YV-208)
HSSF-V-YV209 (YV-209)
HSSF-V-YV210 (YV-210)
HSSF-V-BV200 (BV-200)
HSSF-V-BV201 (BV-201)
HSSF-V-BV202 (BV-202)
HSSF-V-BV203 (BV-203)
HSSF-V-BV204 (BV-204)
HSSF-V-BV205 (BV-205)
HSSF-V-BV206 (BV-206)
HSSF-V-BV207 (BV-207)
HSSF-V-BV208 (BV-208)
HSSF-V-BV209 (BV-209)
HSSF-V-BV210 (BV-210)
HSSF-V-BV211 (BV-211)
HSSF-V-BV212 (BV-212)
HSSF-V-BV213 (BV-213)
HSSF-V-BV214 (BV-214)
HSSF-V-BV215 (BV-215)
HSSF-V-BV216 (BV-216)
HSSF-V-BV217 (BV-217)
HSSF-V-BV218 (BV-218)
HSSF-V-BV219 (BV-219)
HSSF-V-BV220 (BV-220)
HSSF-V-BV221 (BV-221)
HSSF-V-BV222 (BV-222)
HSSF-V-BV223 (BV-223)
HSSF-V-BV303 (BV-303)
HSSF-V-BV304 (BV-304)
HSSF-V-BV305 (BV-305)
HSSF-V-BV306 (BV-306)
HSSF-V-BV113 (BV-113)
HSSF-V-BV112 (BV-112)
HSSF-V-BV124 (BV-124)
HSSF-V-BV125 (BV-125)
HSSF-V-BV130 (BV-130)
HSSF-V-BV131 (BV-131)
HSSF-V-BV132 (BV-132)
HSSF-V-BV133 (BV-133)
HSSF-V-BV134 (BV-134)
HSSF-V-BV135 (BV-135)
HSSF-V-BV136 (BV-136)
HSSF-V-BV137 (BV-137)
HSSF-V-BV138 (BV-138)
HSSF-V-BV139 (BV-139)
HSSF-V-BV140 (BV-140)
HSSF-V-BV151 (BV-151)
HSSF-V-BV152 (REF)
HSSF-V-BV178 (BV-178)
HSSF-V-BV177 (BV-177)
HSSF-V-BV122 (BV-122)
HSSF-V-BV123 (BV-123)
HSSF-V-BV125 (BV-125)
HSSF-V-CV120 (IV-120)
HSSF-V-CV122 (IV-122)
HSSF-V-CV125 (REF)
HSSF-V-CV200 (CV-200)
HSSF-V-CV201 (CV-201)
HSSF-V-CV202 (CV-202)
HSSF-V-CV203 (CV-203)
HSSF-V-CV204 (CV-204)
HSSF-V-CV205 (CV-205)
HSSF-V-CV206 (CV-206)
HSSF-V-CV207 (CV-207)
HSSF-V-CV208 (CV-208)
HSSF-V-CV209 (CV-209)
HSSF-V-CV210 (CV-210)
HSSF-V-CV211 (CV-211)
HSSF-V-CV212 (CV-212)
HSSF-V-CV213 (CV-213)
HSSF-V-CV214 (CV-214)
HSSF-V-CV215 (CV-215)
HSSF-V-CV216 (CV-216)
HSSF-V-CV217 (CV-217)
HSSF-V-CV218 (CV-218)
HSSF-V-CV219 (CV-219)
HSSF-V-CV220 (CV-220)
HSSF-V-CV221 (CV-221)
HSSF-V-CV222 (CV-222)
HSSF-V-CV223 (CV-223)
HSSF-V-CV303 (YV-203)
HSSF-V-CV304 (YV-204)
HSSF-V-CV305 (YV-205)
HSSF-V-CV306 (YV-206)
HSSF-V-CV307 (YV-207)
HSSF-V-CV308 (YV-208)
HSSF-V-CV309 (YV-209)
HSSF-V-CV310 (YV-210)
HSSF-V-CV311 (YV-211)
HSSF-V-CV312 (YV-212)
HSSF-V-CV313 (YV-213)
HSSF-V-CV314 (YV-214)
HSSF-V-CV315 (YV-215)
HSSF-V-CV316 (YV-216)
HSSF-V-CV317 (YV-217)
HSSF-V-CV318 (YV-218)
HSSF-V-CV319 (YV-219)
HSSF-V-CV320 (YV-220)
HSSF-V-CV321 (YV-221)
HSSF-V-CV322 (YV-222)

NOTES:
1. ALL PIPING, VALVES AND ASSOCIATED COMPONENTS IN THE HYDROGEN WATER CHEMISTRY SYSTEM (HWC) AND THE HYDROGEN SUPPLY STORAGE FACILITY (HSSF) ON THIS DRAWING ARE
   -QUALITY CLASS: II
   -SEISMIC CATEGORY: II
   -CODE GROUP: D
2. ALL VALVES AND INSTRUMENTS HSSF UNLESS OTHERWISE NOTED.
3. ALL EQUIPMENT AND INTERCONNECTING PIPING WITHIN THIS BOX SUPPLIED AND DESIGNED BY CHART MANUFACTURING. SEE CVI # 1002-00,103 AND CVI # 1002-00,110 FOR BILL OF MATERIALS AND SPECIFICATIONS FOR THESE COMPONENTS AND PIPING.
4. ALL PIPING NOT INCLUDED IN NOTE 3, INSTALLED BY INSTALLATION CONTRACTOR. FOR PIPE DESIGN SPECIFICATION SEE CVI # 1002-00,7.
5. SEE DWG M501 FOR FLOW DIAGRAM LEGENDS, SYMBOLS AND ABBREVIATIONS

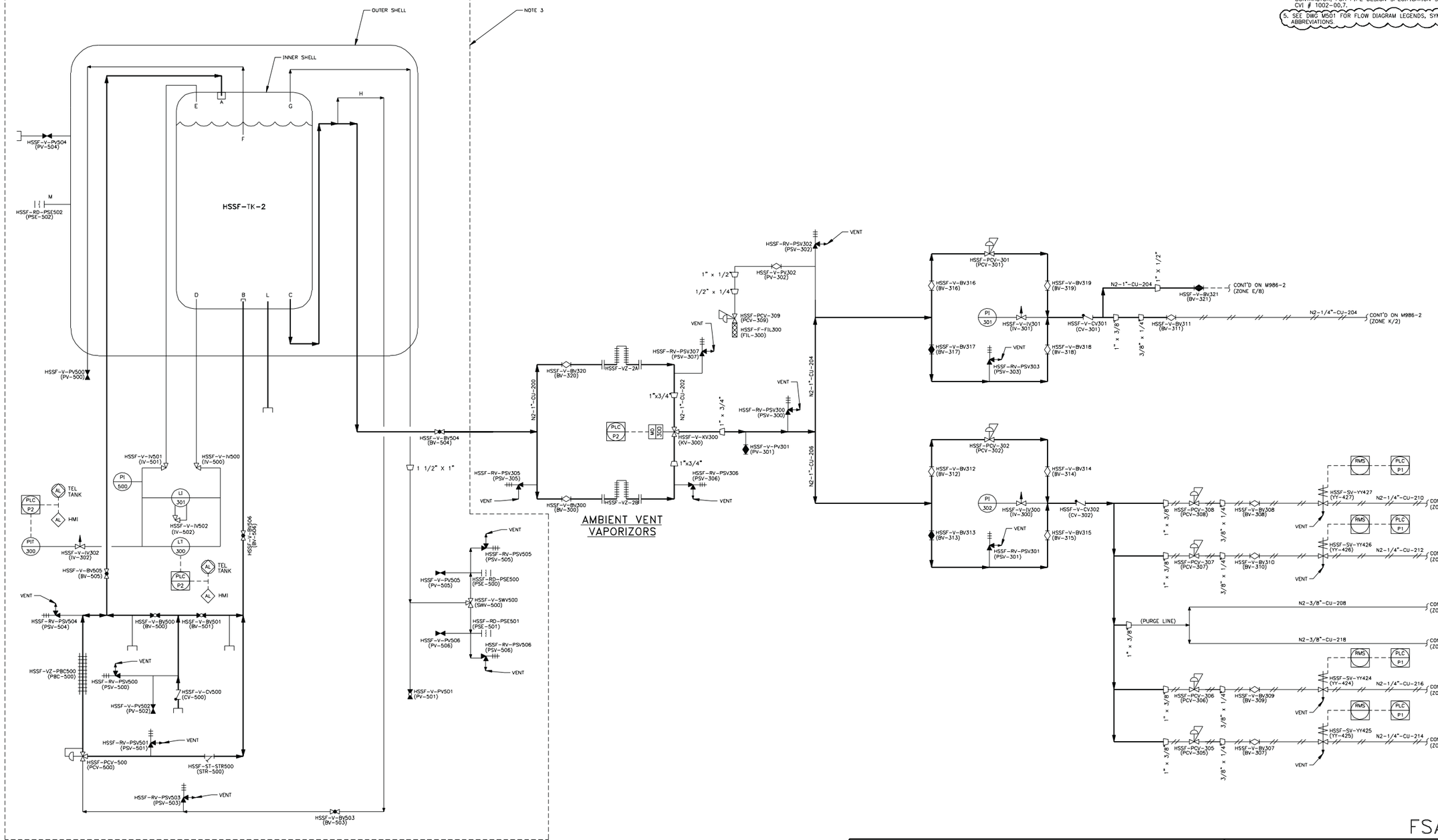

INNER VESSEL CONNECTIONS	
A	TOP FILL
B	BOTTOM FILL
C	LIQUID DRAW DIP TUBE
D	BOTTOM GAUGE LINE
E	TOP GAUGE LINE
F	FULL TRYCOCK
G	VENT
H	ECONOMIZER LINE
L	BOTTOM WITHDRAWAL LIQUID LINE
M	EVACUATION LINE

FSAR FIG.

Columbia Generating Station
Final Safety Analysis Report

Flow Diagram - Hydrogen Water Chemistry Turbine Generator Building and Hydrogen Storage and Supply Facility

Draw. No. M986-3	Rev. 3	Figure 10.4-9.3

Chapter 11

RADIOACTIVE WASTE MANAGEMENT

TABLE OF CONTENTS

Section — Page

11.1 SOURCE TERMS 11.1-1
11.1.1 FISSION PRODUCTS 11.1-1
11.1.1.1 Noble Radionuclide Fission Products 11.1-1
11.1.1.2 Radiohalogen Fission Products 11.1-4
11.1.1.3 Other Fission Products 11.1-6
11.1.1.4 Nomenclature 11.1-6
11.1.2 ACTIVATION PRODUCTS 11.1-7
11.1.2.1 Coolant Activation Products 11.1-7
11.1.2.2 Noncoolant Activation Products 11.1-7
11.1.2.3 Steam and Power Conversion System N-16 Inventory 11.1-8
11.1.3 TRITIUM 11.1-8
11.1.4 FUEL FISSION PRODUCT INVENTORY AND FUEL EXPERIENCE 11.1-11
11.1.4.1 Fuel Fission Product Inventory 11.1-11
11.1.4.2 Fuel Experience 11.1-11
11.1.5 RADIOACTIVITY LEAKAGE AND EFFLUENT SOURCES 11.1-11
11.1.6 REFERENCES 11.1-12

11.2 LIQUID WASTE MANAGEMENT SYSTEM 11.2-1
11.2.1 DESIGN BASIS 11.2-1
11.2.2 SYSTEM DESCRIPTION 11.2-3
11.2.2.1 Process Description 11.2-3
11.2.2.2 Subsystems Description 11.2-4
11.2.2.2.1 Equipment Drain Subsystem 11.2-4
11.2.2.2.2 Floor Drain Subsystem 11.2-5
11.2.2.2.3 Chemical Waste Subsystem 11.2-6
11.2.2.2.4 Shared Equipment 11.2-7
11.2.2.2.5 Surge Capacities 11.2-7
11.2.2.2.6 Design Features 11.2-8
11.2.3 RADIOACTIVE RELEASES 11.2-9
11.2.3.1 Release Point and Dilution 11.2-9
11.2.3.2 Calculation of Releases of Radioactive Materials 11.2-9
11.2.3.3 Exposure of Persons at or Beyond the Site Boundary 11.2-10
11.2.3.4 Cost-Benefit Analysis 11.2-10

11.3 GASEOUS WASTE MANAGEMENT SYSTEMS 11.3-1
11.3.1 DESIGN BASES 11.3-1

Chapter 11

RADIOACTIVE WASTE MANAGEMENT

TABLE OF CONTENTS (Continued)

Section Page

11.3.2 SYSTEM DESCRIPTION 11.3-2
11.3.2.1 Main Condenser Steam Jet Air Ejector RECHAR System 11.3-2
11.3.2.2 Other Radioactive Gas Sources 11.3-6
11.3.2.3 Cost-Benefit Analysis 11.3-8
11.3.2.4 Design Features of the Offgas System 11.3-8
11.3.2.4.1 Maintainability 11.3-8
11.3.2.4.2 Pressure Boundaries 11.3-8
11.3.2.4.3 Building Seismic Design 11.3-9
11.3.2.4.4 Construction of Process Systems 11.3-9
11.3.2.4.5 Instrumentation and Control 11.3-9
11.3.2.4.6 Detonation Resistance 11.3-10
11.3.2.4.7 Operator Exposure Criteria and Controls 11.3-10
11.3.2.4.8 Equipment Malfunction 11.3-10
11.3.2.5 Offgas System Operating Procedure 11.3-11
11.3.2.5.1 Prestartup Preparations 11.3-11
11.3.2.5.2 Startup 11.3-11
11.3.2.5.3 Normal Operation 11.3-11
11.3.2.6 Offgas System Performance Tests 11.3-11
11.3.2.6.1 Recombiner 11.3-11
11.3.2.6.2 Prefilter 11.3-12
11.3.2.6.3 Desiccant Gas Dryer 11.3-12
11.3.2.6.4 Charcoal Performance 11.3-12
11.3.2.6.5 Post Filter 11.3-12
11.3.3 RADIOACTIVE RELEASES 11.3-12
11.3.3.1 Release Points 11.3-12
11.3.3.2 Dilution Factors 11.3-13
11.3.3.3 Estimated Releases 11.3-13
11.3.4 REFERENCES 11.3-14

11.4 SOLID WASTE MANAGEMENT SYSTEM 11.4-1
11.4.1 DESIGN BASIS 11.4-1
11.4.2 SYSTEM DESCRIPTION 11.4-2
11.4.2.1 General 11.4-3
11.4.2.2 Radwaste Disposal System For Reactor Water Cleanup Resin 11.4-3
11.4.2.3 Radwaste Disposal System For Condensate Demineralizer Resin 11.4-4

Chapter 11

RADIOACTIVE WASTE MANAGEMENT

TABLE OF CONTENTS (Continued)

Section — Page

11.4.2.4 Radwaste Disposal System For Fuel Pool, Floor Drain, and Waste Collector Filter Resin 11.4-4
11.4.2.5 Radwaste Disposal System For Spent Resin 11.4-4
11.4.2.6 Resin Container Handling and Storage 11.4-4
11.4.2.7 Miscellaneous Dry Solid Waste System 11.4-5
11.4.2.8 Expected Volumes 11.4-5
11.4.2.9 Packaging 11.4-6
11.4.2.10 Storage Facilities 11.4-6
11.4.2.11 Shipment 11.4-6
11.4.2.12 Process Monitoring 11.4-7
11.4.3 PROCESS CONTROL PROGRAM 11.4-7
11.4.3.1 Objective 11.4-7
11.4.3.2 Process Control Program 11.4-8
11.4.3.3 Process Control Systems 11.4-9
11.4.3.4 Waste Characterization 11.4-9
11.4.3.5 Processing Methods (Wet Wastes) 11.4-10
11.4.3.6 Control Instrumentation and Sampling Program 11.4-11
11.4.3.7 Maintenance and Calibration 11.4-11
11.4.3.8 Waste Processing System Capacity 11.4-12
11.4.3.9 Waste Storage Capacity 11.4-12
11.4.3.10 Compliance With ALARA Principles 11.4-12
11.4.3.11 Unanticipated Wastes 11.4-14
11.4.3.12 Waste Classification 11.4-14
11.4.3.13 Waste Packaging and Shipping 11.4-14

11.5 PROCESS AND EFFLUENT RADIOLOGICAL MONITORING AND SAMPLING SYSTEMS 11.5-1
11.5.1 DESIGN BASIS 11.5-1
11.5.1.1 Design Objectives 11.5-1
11.5.1.1.1 Systems Required for Safety 11.5-1
11.5.1.1.2 Systems Required for Plant Operation 11.5-1
11.5.1.2 Design Criteria 11.5-3
11.5.1.2.1 Systems Required for Safety 11.5-3
11.5.1.2.2 Systems Required for Plant Operation 11.5-4

Chapter 11

RADIOACTIVE WASTE MANAGEMENT

TABLE OF CONTENTS (Continued)

Section — Page

11.5.2 SYSTEM DESCRIPTION 11.5-4
11.5.2.1 Systems Required for Safety 11.5-4
11.5.2.1.1 Main Steam Line Radiation Monitoring System 11.5-4
11.5.2.1.2 Reactor Building Exhaust Plenum Radiation Monitoring System 11.5-5
11.5.2.1.3 Deleted
11.5.2.1.4 Standby Service Water Radiation Monitoring System 11.5-7
11.5.2.2 Systems Required for Plant Operation 11.5-7
11.5.2.2.1 Gaseous Process and Effluent Radiation Monitoring System 11.5-8
11.5.2.2.1.1 Offgas Pretreatment Radiation Monitoring System 11.5-8
11.5.2.2.1.2 Offgas Posttreatment Radiation Monitoring System 11.5-8
11.5.2.2.1.3 Offgas Charcoal Bed Vault Radiation Monitoring System 11.5-9
11.5.2.2.1.4 Mechanical Vacuum Pump Exhaust Radiation Monitoring System 11.5-10
11.5.2.2.1.5 Reactor Building Elevated Release Duct Radiation Monitoring System 11.5-10
11.5.2.2.1.6 Turbine-Generator Building Ventilation Release Duct Radiation Monitoring System 11.5-13
11.5.2.2.1.7 Radwaste Building Ventilation Release Ducts Radiation Monitoring System 11.5-14
11.5.2.2.1.8 NRC Safety Evaluation Report, NUREG-0892 Acceptance 11.5-14
11.5.2.2.2 Liquid Process and Effluent Radiation Monitoring System 11.5-15
11.5.2.2.2.1 Standby Service Water Radiation Monitoring System 11.5-16
11.5.2.2.2.2 Reactor Building Closed Cooling Water Radiation Monitoring System 11.5-16
11.5.2.2.2.3 Radwaste Effluent Radiation Monitoring System 11.5-16
11.5.2.2.2.4 Circulating Water and Plant Service Water Radiation Monitoring Systems 11.5-17
11.5.2.2.3 Primary Containment Radiation Monitoring System 11.5-17
11.5.2.2.3.1 Leak Detection Monitors 11.5-17
11.5.2.2.3.2 Loss-of-Coolant Accident Tracking Radiation Monitoring Systems (Containment Drywell) 11.5-18
11.5.2.3 Sampling 11.5-19
11.5.2.3.1 Process Sampling 11.5-19
11.5.2.3.2 Effluent Sampling 11.5-19
11.5.2.3.3 Analytical Procedures 11.5-20
11.5.2.3.4 Inservice Inspection, Calibration, and Maintenance 11.5-20
11.5.3 EFFLUENT MONITORING AND SAMPLING 11.5-21

Chapter 11

RADIOACTIVE WASTE MANAGEMENT

TABLE OF CONTENTS (Continued)

Section Page

11.5.4 PROCESS MONITORING AND SAMPLING 11.5-21
11.6 POSTACCIDENT SAMPLING SYSTEM 11.6-1
11.6.1 DESIGN BASIS 11.6-1
11.6.2 SYSTEM DESCRIPTION 11.6-1

Chapter 11

RADIOACTIVE WASTE MANAGEMENT

LIST OF TABLES

Number		Page
11.1-1	*Noble Radiogas Source Terms*	*11.1-13*
11.1-2	*Halogen Radioisotopes in Reactor Water*	*11.1-15*
11.1-3	*Other Fission Product Radioisotopes in Reactor Water*	*11.1-16*
11.1-4	*Coolant Activation Products in Reactor Water and Steam*	*11.1-18*
11.1-5	*Noncoolant Activation Products in Reactor Water*	*11.1-19*
11.2-1	Liquid Waste Management System Radioisotope Inventory Equipment Drain Subsystem	11.2-11
11.2-2	Liquid Waste Management System Radioisotope Inventory Chemical Waste Subsystem	11.2-13
11.2-3	Liquid Waste Management System Radioisotope Inventory RWCU and Condensate Filter Demineralizers	11.2-15
11.2-4	Liquid Waste Management System Radioisotope Inventory Spent Resin and Condensate Backwash Receiving Tanks	11.2-17
11.2-5	Liquid Waste Management System Radioisotope Inventory Phase Separators	11.2-19
11.2-6	Annual Average Concentration of Radionuclides in Liquid Effluent	11.2-21
11.2-7	Tank Design Features	11.2-23
11.2-8	Equipment Drain Subsystem Sources	11.2-24
11.2-9	Floor Drain Subsystem Sources	11.2-25
11.2-10	Chemical Waste Subsystem Sources	11.2-26
11.2-11	Radwaste System Process Flow Diagram Data	11.2-27

Chapter 11

RADIOACTIVE WASTE MANAGEMENT

LIST OF TABLES (Continued)

Number	Title	Page
11.2-12	Radwaste Process Equipment Design Basis	11.2-37
11.2-13	Liquid Radwaste Equipment	11.2-38
11.2-14	Annual Releases of Radioactive Material as Liquid	11.2-41
11.3-1	Design Air Ejector Offgas Release Rates	11.3-15
11.3-2	Offgas System Major Equipment Items	11.3-16
11.3-3	Process Data for the Offgas (RECHAR) System	11.3-18
11.3-4	Offgas System Alarmed Process Parameters	11.3-19
11.3-5	Equipment Malfunction Analysis	11.3-20
11.3-6	Release Point Data	11.3-24
11.3-7	Gaseous Waste System Release	11.3-25
11.3-8	Building Volume and Ventilation Rates	11.3-27
11.3-9	Maximum Sector Annual Average Concentrations of Gaseous Radioactive Materials at the Original Restricted Area Boundary	11.3-28
11.3-10	Frequency and Quantity of Steam Discharged to Suppression Pool	11.3-29
11.4-1	Waste Processing Systems Capacities	11.4-15
11.4-2	Solid Waste Management System Major Equipment Items	11.4-16
11.4-3	Significant Isotope Activity in Dewatered Waste	11.4-18
11.4-4	Expected Annual Production of Solids	11.4-21

Chapter 11

RADIOACTIVE WASTE MANAGEMENT

LIST OF TABLES (Continued)

Number	Title	Page
11.5-1	Process and Effluent Radiation Monitoring System (Gaseous and Airborne Monitors)	11.5-23
11.5-2	Process and Effluent Radiation Monitoring System (Liquid Monitors)	11.5-27
11.5-3	Radiological Analysis Summary of Gaseous Effluent Samples	11.5-28
11.5-4	Radiological Analysis Summary of Liquid Process Samples	11.5-29
11.5-5	Radiological Analysis Summary of Gaseous Process Samples	11.5-30
11.5-6	Radiological Analysis Summary of Liquid Effluent Samples	11.5-31

Chapter 11

RADIOACTIVE WASTE MANAGEMENT

LIST OF FIGURES

Number	Title
11.1-1	Noble Radiogas Decay Constant Exponent Frequency Histogram
11.1-2	Radiohalogen Decay Constant Exponent Frequency Histogram
11.1-3	Noble Radiogas Leakage Versus Iodine-131 Leakage
11.2-1	Radwaste System Process Diagram
11.2-2	Flow Diagram Radioactive Waste System Equipment Drain Processing
11.2-3	Flow Diagram Radioactive Waste System Floor Drain Processing
11.2-4	Flow Diagram Chemical Waste Processing (Sheets 1 through 3)
11.3-1	Offgas System - Low Temperature
11.3-2	Offgas System P&ID (Sheets 1 and 2)
11.4-1	Flow Diagram Radioactive Waste Disposal Solids Handling System
11.5-1	Main Steam Line Monitors
11.5-2	Reactor Building Exhaust Plenum Monitors and Charcoal Bed Vault Monitor
11.5-3	DELETED
11.5-4	Process and Effluent Liquid Radiation Monitors
11.5-5	Offgas Pretreatment and Posttreatment Radiation Monitors
11.5-6	Mechanical Vacuum Pumps Exhaust Monitor and Reactor Building Elevated Release Stack Monitor
11.5-7	Turbine and Radwaste Building Ventilation Release Duct Monitors
11.5-8	DELETED

Chapter 11

RADIOACTIVE WASTE MANAGEMENT

LIST OF FIGURES

Number	Title
11.5-9	Primary Containment Leak Detection Monitor
11.5-10	Primary Containment and Elevated Release Stack LOCA Tracking
11.5-11	Elevated Release Stack Monitoring and Sampling System
1.5-11A	Elevated Release Stack LOCA Monitoring (D-terminated)

Chapter 11

RADIOACTIVE WASTE MANAGEMENT

11.1 SOURCE TERMS

The italicized information is historical and was provided to support the application for an operating license.

Radioactive material sources (activation products and fission product release from fuel) have been evaluated in operating boiling water reactors (BWRs) over the past decade. These source terms are reviewed and periodically revised to incorporate up-to-date information. Release of radioactive material from operating BWRs has resulted in doses to offsite persons which have been only a small fraction of 10 CFR 20 permissible or natural background doses.

The information provided in this section defines the design-basis radioactive material levels in the reactor water, steam, and offgas. The various radioisotopes listed have been grouped as coolant activation products, noncoolant activation products, and fission products. The fission product levels are based on measurements of BWR reactor water and offgas at several stations through mid-1971. Emphasis was placed on observations made at Kernkraftwerk RWE-Bayernwerk GmbH (KRB) and Dresden-2. The design-basis radioactive material levels do not necessarily include all the radioisotopes observed or predicted theoretically to be present. The radioisotopes included are considered significant to one or more of the following criteria:

a. Plant equipment design,
b. Shielding design,
c. Understanding system operation and performance,
d. Measurement practicability, and
e. Evaluating radioactive material releases to the environment.

The inventory of radionuclides used to determine shielding requirements of system components are discussed in Chapter 12.

11.1.1 FISSION PRODUCTS

11.1.1.1 Noble Radiogas Fission Products

The noble gas radionuclide fission product source terms observed in operating BWRs are generally complex mixtures whose sources vary from miniscule defects in cladding to "tramp" uranium on external cladding surfaces. The relative concentrations or amounts of noble radiogas can be described as follows.

Equilibrium: $R_{g,i} = K_1 Y_1$ *(11.1-1)*

Recoil: $R_{g,i} = K_2 Y_1 \lambda_i$ *(11.1-2)*

The nomenclature in Section 11.1.1.4 defines the terms in these and succeeding equations. The constants K_1 and K_2 describe the fractions of the total fissions that are involved in each of the releases. The equilibrium and recoil mixtures are the two extremes of the mixture spectrum that are physically possible. When a sufficient time delay occurs between the fission event and the time of release of the radiogases from the fuel to the coolant, the radiogases approach equilibrium levels in the fuel and the equilibrium mixture results. Where there is no delay between the fission event and the release of the radiogases, the recoil mixture is observed. Prior to Vallecitos Boiling Water Reactor (VBWR) and Dresden-1 experience, it was assumed that noble radiogas leakage from the fuel would be the equilibrium mixture of the noble radiogases present in the fuel.

The VBWR and early Dresden-1 experience (Reference 11.1-1) indicated that the actual mixture most often observed approached a distribution which was intermediate in character to the two extremes. This intermediate decay mixture was termed the "diffusion" mixture. It must be emphasized that this "diffusion" mixture is merely one possible point on the mixture spectrum ranging from the equilibrium to the recoil mixture and does not have the absolute mathematical and mechanistic basis for the calculational methods possible for equilibrium and recoil mixtures. However, the "diffusion" distribution pattern which has been described is as follows:

Diffusion: $R_{g,i} = K_3 Y_i \lambda_i^{0.5}$ *(11.1-3)*

The constant K_3 describes the fraction of total fissions that are involved in the release. The value of the exponent of the decay constant, λ_i, is midway between the values for the equilibrium case, 0, and recoil case 1. The "diffusion" pattern value of 0.5 was originally derived from diffusion theory.

Although the previously described "diffusion" mixture was used by GE as a basis for design since 1963, the design-basis release magnitude used has varied from 0.5 Ci/sec to 0.1 Ci/sec as measured after 30-minute decay (t=30 minutes). Since about 1967, the design-basis release magnitude used (including the 1971 source terms) was established at an annual average of 0.1 Ci/sec (t = 30 minutes). This design basis is considered as an annual average with some time above and some time below this value. This design value was selected on the basis of operating experience rather than predictive assumptions. Several judgment factors,*

**The noble radiogas source term rate after 30-minute decay has been used as a conventional measure of the design-basis fuel leakage rate since it is conveniently measurable and was consistent with the nominal design-basis 30-minute offgas holdup system used on a number of previous plants.*

including the significance of environmental release, reactor water radioisotope concentrations, liquid waste handling and effluent disposal criteria, building air contamination, shielding design, and turbine and other component contamination affecting maintenance, have been considered in establishing this level.

Noble radiogas source terms from fuel above 0.1 Ci/sec (t = 30 minutes) can be tolerated for reasonable periods of time. Continual assessment of these values is made on the basis of actual operating experience in BWRs (References 11.1-2 and 11.1-3).

While the noble radiogas source-term magnitude was established at 0.1 Ci/sec (t = 30 minutes), it was recognized that there may be a more statistically applicable distribution for the noble radiogas mixture. Sufficient data were available from KRB operations from 1967 to mid-1971 along with Dresden-2 data from operation in 1970 and several months in 1971 to more accurately characterize the noble radiogas mixture pattern for an operating BWR.

The basic equation for each radioisotope used to analyze the collected data is:

$$R_{g,i} = K_g Y_i \lambda_i^m \left(1 - e^{-\lambda_i T}\right)\left(e^{-\lambda_i t}\right) \qquad (11.1\text{-}4)$$

With the exception of Kr-85 with a half-life of 10.74 years, the noble radiogas fission products in the fuel are essentially at an equilibrium condition after an irradiation period of several months (rate of formation is equal to the rate of decay). So for practical purposes the term $(1 - e^{-\lambda_i T})$ approaches 1 and can be neglected when the reactor has been operating steady state for long periods of time. The term $(1 - e^{-\lambda_i T})$ is used to adjust the releases from the fuel (t = 0) to the decay time for which values are needed. Historically, t = 30 minutes has been used. When discussing long steady-state operation and leakage from the fuel (t = 0), the following simplified form of Equation 11.1-4 can be used to describe the leakage of each noble radiogas:

$$R_{g,i} = K_g Y_i \lambda_i^m \qquad (11.1\text{-}5)$$

The constant, K_g, describes the magnitude of leakage from the fuel. The relative rates of leakage of the different noble radiogas isotopes is accounted for by the variable, m, the exponent of the decay constant, λ_i.

Dividing both sides of Equation 11.1-5 by y_i, the fission yield, and taking the logarithm of both sides results in the following equation:

$$\log\left(R_{g,i} / Y_i\right) = m \log\left(\lambda_i\right) + \log\left(K_g\right) \qquad (11.1\text{-}6)$$

Equation 11.1-6 represents a straight line when log ($R_{g,i}/y_i$) is plotted vs. log (λ_i); m is the slope of the line. This straight line is obtained by plotting ($R_{g,i}/y_i$) vs. (λ_i) on logarithmic graph paper. By fitting actual data from KRB and Dresden-2 (using least squares techniques) to the equation, the slope, m, can be obtained. This can be estimated on the plotted graph. With radiogas leakage at KRB over the nearly 5-year period varying from 0.001 to 0.056 Ci/sec (t = 30 minutes) and with radiogas leakage at Dresden-2 varying from 0.001 to 0.169 Ci/sec (t = 30 minutes), the average value of m was determined. The value for m is 0.4 with a standard deviation of ±0.07. This is illustrated in Figure 11.1-1 as a frequency histogram. As can be seen from this figure, variations in m were observed in the range of m = 0.1 to m = 0.6. After establishing the value of m = 0.4, the value of K_g can be calculated by selecting a value for R_g, or as has been done historically, the design basis is set by the total design-basis source-term magnitude at t = 30 minutes. With SR_g at 30 minutes = 100,000 mCi/sec, K_g can be calculated as being 2.6×10^7 and Equation 11.1-4 becomes:

$$R_{g,i} = 2.6 \times 10^{7}\ Y_i \lambda_i^{\ 0.4} \left(1 - e^{-\lambda_i t}\right)\left(e^{-\lambda_i t}\right) \qquad (11.1\text{-}7)$$

This updated noble radiogas source-term mixture has been termed the "1971 mixture" to differentiate it from the "diffusion" mixture. The noble gas source term for each radioisotope can be calculated from Equation 11.1-7. The resultant source terms are presented in Table 11.1-1 as leakage from fuel (t = 0) and after 30-minute decay. While Kr-85 can be calculated using Equation 11.1-7, the number of confirming experimental observations was limited by the difficulty of measuring very low release rates of this isotope. Therefore, the table provides an estimated range for ^{85}Kr based on a few actual measurements.

11.1.1.2 Radiohalogen Fission Products

Historically, the radiohalogen design-basis source term was established by the same equation as that used for noble radiogases. In a fashion similar to that used with gases, a simplified equation can be shown to describe the release of each radiohalogen:

$$R_{h,i} = K_h Y_i \lambda_i^{\ n} \qquad (11.1\text{-}8)$$

The constant, K_h, describes the magnitude of leakage from fuel. The relative rates of radiohalogen leakage is expressed in terms of n, the exponent of the decay constant, λ_i. As was done with the noble radiogases, the average value was determined for n. The value for n is 0.5 with a standard deviation of ±0.19. This is illustrated in Figure 11.1-2 as a frequency histogram. As can be seen from this figure, variations in n were observed in the range of n = 0.1 to n = 0.9.

It appeared that the use of the previous method of calculating radiohalogen leakage from fuel was overly conservative. Figure 11.1-3 relates KRB and Dresden-2 noble radiogas versus I-131 leakage. While it can be seen from Dresden-2 data, during the period August 1970 to January 1971, that there is a relationship between noble radiogas and I-131 leakage under one fuel condition, there was no simple relationship for all fuel conditions experienced. Also, it can be seen that during this period, high radiogas leakages were not accompanied by high radioiodine leakage from the fuel. Except for one KRB datum point, all steady-state I-131 leakages observed at KRB or Dresden-2 were equal to or less than 505 μCi/sec. Even at Dresden-1 in March 1965, when severe defects were experienced in stainless steel clad fuel, I-131 leakages greater than 500 μCi/sec were not experienced. Figure 11.1-3 shows that these higher radioiodine leakages from the fuel were related to noble radiogas source terms of less than the design-basis value of 0.1 Ci/sec (t = 30 minutes). This may be partially explained by inherent limitations due to internal plant operational problems that caused plant derating.

In general, it would not be anticipated that operation at full power would continue for any significant time period with fuel cladding defects, which would be indicated by ^{131}I leakage from the fuel in excess of 700 μCi/sec. When high radiohalogen leakages are observed, other fission products will be present in greater amounts.

Using these judgment factors and experience to date, the design-basis radiohalogen source terms from fuel were established based on ^{131}I leakage of 700 μCi/sec. This value, as seen in Figure 11.1-3, accommodates the experience data and the design-basis noble radiogas source term of 0.1 Ci/sec (t = 30 minutes). With the I-131 design-basis source-term established, K_h can be calculated as being 2.4 x 10^7 and radiohalogen release can be expressed by the following equation:

$$R_{h,i} = 2.4 \times 10^{7}\ Y_i \lambda_i^{0.5} \left(1 - e^{-\lambda_i T}\right)\left(e^{-\lambda_i t}\right) \qquad (11.1\text{-}9)$$

Concentrations of radiohalogens in reactor water can be calculated using the following equation:

$$C_{h,i} = \frac{R_{h,i}}{(\lambda_i + \beta + \gamma)M} \qquad (11.1\text{-}10)$$

The observed "carryover" for radiohalogens has varied from 0.1% to about 2% on newer plants. The average of observed radiohalogen carryover measurements has been 1.2% by weight of reactor water in steam with a standard deviation of ±0.9%. In the present source term definition, a radiohalogen carryover of 2% (0.02 fraction) was used.

The radiohalogen release rate from the fuel was calculated from equation 11.1-9.

Concentrations in reactor water were calculated from equation 11.1-10.

The resultant concentrations are presented in Table 11.1-2. Radiohalogens with half-lives less than 3 minutes were omitted.

11.1.1.3 Other Fission Products

The observations of other fission products (and transuranic nuclides, including ^{239}Np) in operating BWRs are not adequately correlated by simple equations. For these radioisotopes, design-basis concentrations in reactor water have been estimated conservatively from experience data (Reference 11.1-8) and are presented in Table 11.1-3. Radioisotopes with half-lives less than 10 minutes were not considered. Carryover of these radioisotopes from the reactor water to the steam is estimated to be ≤0.1% (≤ 0.001 fraction) (Reference 11.1-8). In addition to carryover, however, decay of noble radiogases in the steam leaving the reactor will result in production of noble gas daughter radioisotopes in the steam and condensate systems.

Some daughter radioisotopes (e.g., yttrium and lanthanum) were not listed as being in reactor water. Their independent leakage to the coolant is negligible; however, these radioisotopes may be observed in some samples in equilibrium or approaching equilibrium with the parent radioisotope.

Except for ^{239}Np, trace concentrations of transuranic isotopes have been observed in only a few samples where extensive and complex analyses were carried out. The predominant alpha emitter present in reactor water is ^{242}Cm at an estimated concentration of 10^{-6} μCi/g or less, which is below the maximum permissible concentration in drinking water applicable to continuous use by the general public. The concentration of alpha-emitting plutonium radioisotopes is more than one order of magnitude lower than that of ^{242}Cm.

Plutonium-241 (a beta emitter) may also be present in concentrations comparable to the ^{242}Cm level.

11.1.1.4 Nomenclature

The following list defines the terms used in equations for source term calculations:

$R_{g,i}$ = *leakage rate of noble gas radioisotope i (μCi/sec)*

$R_{h,i}$ = *leakage rate of a halogen radioisotope i (μCi/sec)*

Y_i = *fission yield of a radioisotope i (atoms/fission)*

λ_I = *decay constant of a radioisotope i (sec^{-1})*

T = *fuel irradiation time (sec)*

t = *decay time following leakage from fuel (sec)*

m = *noble radiogas decay constant exponent (dimensionless)*

n = *radiohalogen decay constant exponent (dimensionless)*

K_g = *a constant establishing the level of noble radiogas leakage from fuel*

K_h = *a constant establishing the level of radiohalogen leakage from fuel*

$C_{h,i}$ = *concentration of a radiohalogen i in reactor water (μCi/g)*

M = *mass of water in the operating reactor (g)*

β = *cleanup system removal constant (sec^{-1})*

$$\beta = \frac{\text{cleanup system flow rate (g/sec)}}{M(g)}$$

g = *grams mass*

γ = *halogen steam carryover removal constant (sec^{-1})*

$$\gamma = \frac{\text{concentration of radiohalogen isotope in steam } (\mu Ci / g)}{C_{h,i}\,(\mu Ci / g)} \; x \; \frac{\text{steam flow } (g / sec)}{M\,(g)}$$

11.1.2 ACTIVATION PRODUCTS

11.1.2.1 Coolant Activation Products

The coolant activation products are not adequately correlated by simple equations. Design basis concentrations in reactor water and steam have been estimated conservatively from experience data. The resultant concentrations are presented in Table 11.1-4.

11.1.2.2 Noncoolant Activation Products

The activation products formed by activation of impurities in the coolant or by corrosion of irradiated system materials are not adequately correlated by simple equations. The design-basis source terms of noncoolant activation products have been estimated conservatively

from experience data (Reference 11.1-8). The resultant concentrations are presented in Table 11.1-5. Carryover of these isotopes from the reactor water to the steam is estimated to be <0.1% (<0.001 fraction) (Reference 11.1-8).

11.1.2.3 Steam and Power Conversion System N-16 Inventory

The main steam and reactor feedwater systems sources are discussed in Section 12.2.1.2.2.7. This section discusses the N-16 source strength in the moisture separators and reheaters, main condenser and hotwell, feedwater heaters, and associated piping.

11.1.3 TRITIUM

In a BWR, tritium is produced by three principal methods:

a. Activation of naturally occurring deuterium in the primary coolant,
b. Nuclear fission of UO_2 fuel, and
c. Neutron reactions with boron used in reactivity control rods.

The tritium formed in control rods, which may be released from a BWR in liquid or gaseous effluents, is believed to be negligible. The prime source of tritium available for release from a BWR is that produced from activation of deuterium in the primary coolant. Some fission product tritium may also transfer from fuel to primary coolant. This discussion is limited to the uncertainties associated with estimating the amounts of tritium generated in a BWR which are available for release. All of the tritium produced by activation of deuterium in the primary coolant is available for release in liquid or gaseous effluents. The tritium formed in a BWR from deuterium activation is calculated using the equation

$$R_{act} = \frac{\Sigma \phi V \lambda}{3.7 \times 10^4 P} \qquad (11.1\text{-}11)$$

where:

R_{act} = *tritium formation rate by deuterium activation act (μCi/sec/MWt)*

Σ = *macroscopic thermal neutron cross section (cm^{-1})*

ϕ = *thermal neutron flux (neutrons/cm^2-sec)*

V = *coolant volume in core (cm^3)*

λ = *tritium radioactive decay constant (1.78×10^{-9} sec^{-1})*

P = *reactor power level (MWt)*

For recent BWR designs, R_{act} is calculated to be (1.3 ± 0.4) x 10^{-4} μCi/sec/MWt. The uncertainty indicated is derived from the estimated errors in selecting values for the coolant volume in the core, coolant density in the core, abundance of deuterium in light water [some additional deuterium will be present because of the H(n,γ) D reaction], thermal neutron flux, and microscopic cross section for deuterium.

The fraction of tritium produced by fission which may transfer from the fuel to the coolant (which will then be available for release in liquid and gaseous effluents) is more difficult to estimate. However, since zircaloy-clad fuel rods are used in BWRs, essentially all fission product tritium will remain in the fuel rods unless defects are present in the cladding material (Reference 11.1-4).

The study made at Dresden-1 in 1968 by the U.S. Public Health Service (USPHS) suggests that essentially all of the tritium released from the plant could be accounted for by the deuterium activation source (Reference 11.1-3). For purposes of estimating the leakage of tritium from defective fuel, it is assumed that it leaks in a manner similar to the leakage of noble radiogases. Thus, use is made of the empirical relationship described as the "diffusion" mixture used for predicting the source term of individual noble radiogas isotopes as a function of the total noble gas source term. The equation which describes this relationship is:

$$R_{dif} = Ky\lambda^{0.5} \qquad (11.1\text{-}12)$$

where:

R_{dif} = *leakage rate of tritium from fuel (μCi/sec)*

y = *fission yield fraction (atoms/fission)*

λ = *radioactive decay constant (sec^{-1})*

K = *a constant related to total tritium leakage rate.*

When the total noble radiogas source term is 100,000 μCi/sec after 30-minutes decay, leakage from fuel is calculated to be about 0.24 μCi/sec of tritium. To place this value in perspective, in the USPHS study (Reference 11.1-3), the observed rate of ^{85}Kr (which has a half-life similar to that of tritium) was 0.06 to 0.4 times that calculated using the "diffusion" mixture relationship. This would suggest that the actual tritium leakage rate might range from 0.015 to 0.10 μCi/sec. Since the annual average noble radiogas leakage from a BWR is expected to

be less than 100,000 μCi/sec (t = 30-minutes), the annual average tritium release rate from the fission source is conservatively estimated at 0.12 ± 0.12 μCi/sec, or 0.0 to 0.24 μCi/sec. Based on this approach, the estimated total tritium appearance rate in reactor coolant and release rate in the effluent is about 19 Ci/yr.

Tritium formed in the reactor is present as tritiated oxide (HTO) and to a lesser degree as tritiated gas (HT). Tritium concentration on a weight basis in the steam formed in the reactor is the same as in the reactor water at any given time. This tritium concentration is also present in condensate and feedwater. Since radioactive effluents generally originate from the reactor and power cycle equipment, radioactive effluents also have this tritium concentration. The condensate storage tanks receive treated water from the liquid waste management systems and rejected water from the condensate system. Thus, all plant process water approaches a common tritium concentration.

Offgases released from the plant contain tritium, which is present as tritiated gas (HT) resulting from reactor water radiolysis as well as tritiated water vapor (HTO). In addition, water vapor from the turbine gland seal steam packing exhauster and some water vapor present in ventilation air due to process steam leaks and evaporation from sumps and tanks also contain tritium. The remainder of the tritium leaves the plant in liquid effluents or with solid wastes.

Recombination of radiolysis gases in the offgas system forms water, which is condensed and returned to the main condenser. This tends to reduce the amount of tritium leaving in gaseous effluents. Reducing the gaseous tritium release results in a slightly higher tritium concentration in the plant process water. Reducing the amount of liquid effluent discharged will also result in a higher process coolant tritium concentration.

Essentially all tritium in the primary coolant is eventually released to the environs, either as water vapor and gas to the atmosphere or as liquid effluent to the plant discharge or as solid waste. Reduction due to radioactive decay is negligible due to the 12.3-year half-life of tritium.

The USPHS study at Dresden-1 estimated that approximately 90% of the tritium release was observed in liquid effluent, with the remaining 10% leaving as gaseous effluent (Reference 11.1-5).

Efforts to reduce the volume of liquid effluent discharges may change this distribution so that a greater amount of tritium will leave as gaseous effluent. From a practical standpoint, the fraction of tritium leaving as liquid effluent may vary between 60% and 90% with the remainder leaving in gaseous effluent.

The amount of tritium released to the environment in liquid and gaseous effluents is based on the draft Regulatory Guide 1.CC, BWR-GALE code analyses. This is discussed in Sections 11.2 and 11.3 respectively.

11.1.4 FUEL FISSION PRODUCT INVENTORY AND FUEL EXPERIENCE

11.1.4.1 Fuel Fission Product Inventory

Fuel fission product inventory information is used in establishing fission product source terms for accident analysis and is, therefore, discussed in Chapter 15.

11.1.4.2 Fuel Experience

A discussion of BWR fuel experienced including fuel failure, burn-up and thermal conditions under which the experience was gained, is presented in References 11.1-2, 11.1-3, and 11.1-6.

11.1.5 RADIOACTIVITY LEAKAGE AND EFFLUENT SOURCES

Process leakage results in potential release paths for noble gases and other volatile fission products via ventilation systems. Liquids from process leaks are collected and routed to radioactive equipment and floor drain systems. Radioisotope releases via ventilation paths are at extremely low levels and have been insignificant compared to process offgas from operating BWR plants. However, because the implementation of improved process offgas treatment systems makes the ventilation release comparatively significant, measurements have been conducted to identify and quantify these low-level release paths. In addition an awareness of measurements by the Electric Power Research Institute, other organizations, and routine measurements by other utilities with operating BWRs has been maintained. Design basis estimates of the various liquid, gaseous, and solids effluents are discussed in Sections 11.2, 11.3, and 11.4 which follow.

Concurrently, analytical and mathematical model studies are being performed to provide a description of the transport, residence, and release of various radionuclides in and from an operating BWR.

Process leakage measurement, detection, and control methods are further discussed in Sections 5.2.5, 11.2.2, 11.3.2, and 12.1.2.

The effect of process leakage sources on the in-plant airborne radionuclide concentrations and the adequacy of plant ventilation systems is discussed in Section 12.2.2. Liquid radioactive sources are discussed in Section 11.2 and gaseous radioactive sources are discussed in Section 11.3.

11.1.6 REFERENCES

11.1-1 *Brutschy, F. J., "A comparison of Fission Product Release Studies in Loops and VBWR," Paper presented at the Tripartite Conference on Transport of Materials in Water Systems, Chalk River, Canada (February 1961).*

11.1-2 *Williamson, H. E., Ditmore, D. C., "Experience with BWR Fuel Through September 1971," NEDO-10505, May 1972. (Update)*

11.1-3 *Elkins, R. B., "Experience with BWR Fuel Through September 1974," NEDO-20922, June 1975.*

11.1-4 *Ray, J. W., "Tritium in Power Reactors," Reactor and Fuel Processing Technology, 12 (1), pp. 19-26, Winter 1968-1969.*

11.1-5 *Kahn, B., et al, "Radiological Surveillance Studies at a Boiling Water Nuclear Power Reactor," BRH/DER 70-1, March 1970.*

11.1-6 *Williamson, H. E., Ditmore, D. C., "Current State of Knowledge of High Performance BWR Zircaloy Clad UO Fuel," NEDO-10173, May 1970.*

11.1-7 *Marrero, T. R., "Airborne Releases From BWRs for Environmental Impact Evaluation," NEDO-21159, March 1976.*

11.1-8 *Gilbert, R. S., Skarpelos, J. M., "Technical Derivation of 1971 BWR Design Basis Radioactive Material Source Terms," NEDO-10871, March 1973.*

Table 11.1-1

Noble Radiogas Source Terms

Isotope	*Half-Life*	*Source Term t = 0 (μCi/sec)*	*Source Term t = 30 minutes (μCi/sec)*
^{83m}Kr	*1.86 hr*	3.4×10^{3}	2.9×10^{3}
^{85m}Kr	*4.4 hr*	6.1×10^{3}	5.6×10^{3}
^{85}Kr	*10.74 years*	*10 to 20*[a]	*10 to 20*[a]
^{87}Kr	*76 minutes*	2.0×10^{4}	1.5×10^{4}
^{88}Kr	*2.79 hr*	2.0×10^{4}	1.8×10^{4}
^{89}Kr	*3.18 minutes*	1.3×10^{5}	1.8×10^{2}
^{90}Kr	*32.3 sec*	2.8×10^{5}	---
^{91}Kr	*8.6 sec*	3.3×10^{5}	---
^{92}Kr	*1.84 sec*	3.3×10^{5}	---
^{93}Kr	*1.29 sec*	9.9×10^{4}	---
^{94}Kr	*1.0 sec*	2.3×10^{4}	---
^{95}Kr	*0.5 sec*	2.1×10^{3}	---
^{97}Kr	*1.0 sec*	1.4×10^{1}	---
^{131m}Xe	*11.96 days*	1.5×10^{1}	1.5×10^{1}
^{133m}Xe	*2.26 days*	2.9×10^{2}	2.8×10^{2}
^{133}Xe	*5.27 days*	8.2×10^{3}	8.2×10^{3}
^{135m}Xe	*15.7 minutes*	2.6×10^{4}	6.9×10^{3}
^{135}Xe	*9.16 hr*	2.2×10^{4}	2.2×10^{4}
^{137}Xe	*3.82 minutes*	1.5×10^{5}	6.7×10^{2}

Table 11.1-1

Noble Radiogas Source Terms (Continued)

Isotope	*Half-Life*	*Source Term $t = 0$ (μCi/sec)*	*Source Term $t = 30$ minutes (μCi/sec)*
^{138}Xe	*14.2 minutes*	8.9×10^{4}	2.1×10^{4}
^{139}Xe	*40 sec*	2.8×10^{5}	---
^{140}Xe	*13.6 sec*	3.0×10^{5}	---
^{141}Xe	*1.72 sec*	2.4×10^{5}	---
^{142}Xe	*1.22 sec*	7.3×10^{4}	---
^{143}Xe	*0.96 sec*	1.2×10^{4}	---
^{144}Xe	*9.0 sec*	5.6×10^{2}	---
	Totals	$\sim 2.5 \times 10^{6}$	$\sim 1.0 \times 10^{5}$

[a] *Estimated from experimental observations.*

Table 11.1-2

Halogen Radioisotopes in Reactor Water

Isotope	*Half-Life*	*Concentration (μCi/g)*
^{83}Br	*2.40 hr*	1.5×10^{-2}
^{84}Br	*31.8 minutes*	2.7×10^{-2}
^{85}Br	*3.0 minutes*	1.7×10^{-2}
^{131}I	*8.07 days*	1.3×10^{-2}
^{132}I	*2.28 hr*	1.2×10^{-1}
^{133}I	*20.8 hr*	8.8×10^{-2}
^{134}I	*52.3 minutes*	2.4×10^{-1}
^{135}I	*6.7 hr*	1.3×10^{-1}

Table 11.1-3

Other Fission Product Radioisotopes in Reactor Water

Isotope	*Half-Life*	*Concentration (μCi/g)*
^{89}Sr	50.8 days	3.1×10^{-3}
^{90}Sr	28.9 years	2.3×10^{-4}
^{91}Sr	9.67 hr	6.9×10^{-2}
^{92}Sr	2.69 hr	1.1×10^{-1}
^{95}Zr	65.5 days	4.0×10^{-5}
^{97}Zr	16.8 hr	3.2×10^{-5}
^{95}Nb	35.1 days	4.2×10^{-5}
^{99}Mo	66.6 hr	2.2×10^{-2}
^{99m}Tc	6.007 hr	2.8×10^{-1}
^{101}Tc	14.2 minutes	1.4×10^{-1}
^{103}Ru	39.8 days	1.9×10^{-5}
^{106}Ru	368 days	2.6×10^{-6}
^{129m}Te	34.1 days	4.0×10^{-5}
^{132}Te	78.0 hr	4.9×10^{-2}
^{134}Cs	2.06 years	$1.6 \times - 10^{-4}$
^{136}Cs	13.0 days	1.1×10^{-4}
^{137}Cs	30.2 years	2.4×10^{-4}
^{138}Cs	32.3 minutes	1.9×10^{-1}
^{139}Ba	83.2 minutes	1.6×10^{-1}

Table 11.1-3

Other Fission Product Radioisotopes in Reactor Water (Continued)

Isotope	*Half-Life*	*Concentration (μCi/g)*
^{140}Ba	*12.8 days*	9.0×10^{-3}
^{141}Ba	*18.3 minutes*	1.7×10^{-1}
^{142}Ba	*10.7 minutes*	1.7×10^{-1}
^{141}Ce	*32.53 days*	3.9×10^{-5}
^{143}Ce	*33.0 hr*	3.5×10^{-5}
^{144}Ce	*384.4 days*	3.5×10^{-5}
^{143}Pr	*13.58 days*	3.8×10^{-5}
^{147}Nd	*11.06 days*	1.4×10^{-5}
^{239}Np	*2.35 days*	2.4×10^{-1}

Table 11.1-4

Coolant Activation Products in Reactor Water and Steam

Isotope	*Half-Life*	*Steam Concentration (μCi/g)*	*Reactor Water Concentration (μCi/g)*
^{13}N	*9.99 minutes*	7×10^{-3}	4×10^{-2}
^{16}N	*7.13 sec*	5×10^{1}	4×10^{1}
^{17}N	*4.14 sec*	2×10^{-2}	6×10^{-3}
^{19}O	*26.8 sec*	8×10^{-1}	7×10^{-1}
^{18}F	*109.8 minutes*	4×10^{-3}	4×10^{-3}

Table 11.1-5

Noncoolant Activation Products in Reactor Water

Isotope	*Half-Life*	*Concentration (μCi/g)*
^{24}Na	*15 hr*	2×10^{-3}
^{32}P	*14.31 days*	2×10^{-5}
^{51}Cr	*27.8 days*	5×10^{-4}
^{54}Mn	*313 days*	4×10^{-5}
^{56}Mn	*2.58 hr*	5×10^{-2}
^{58}Co	*71.4 days*	5×10^{-3}
^{60}Co	*5.25 years*	5×10^{-4}
^{59}Fe	*45 days*	8×10^{-5}
^{65}Ni	*2.55 hr*	3×10^{-4}
^{65}Zn	*243.7 days*	2×10^{-6}
^{69m}Zn	*13.7 hr*	3×10^{-5}
^{110m}Ag	*253 days*	6×10^{-5}
^{187}W	*23.9 hr*	3×10^{-3}

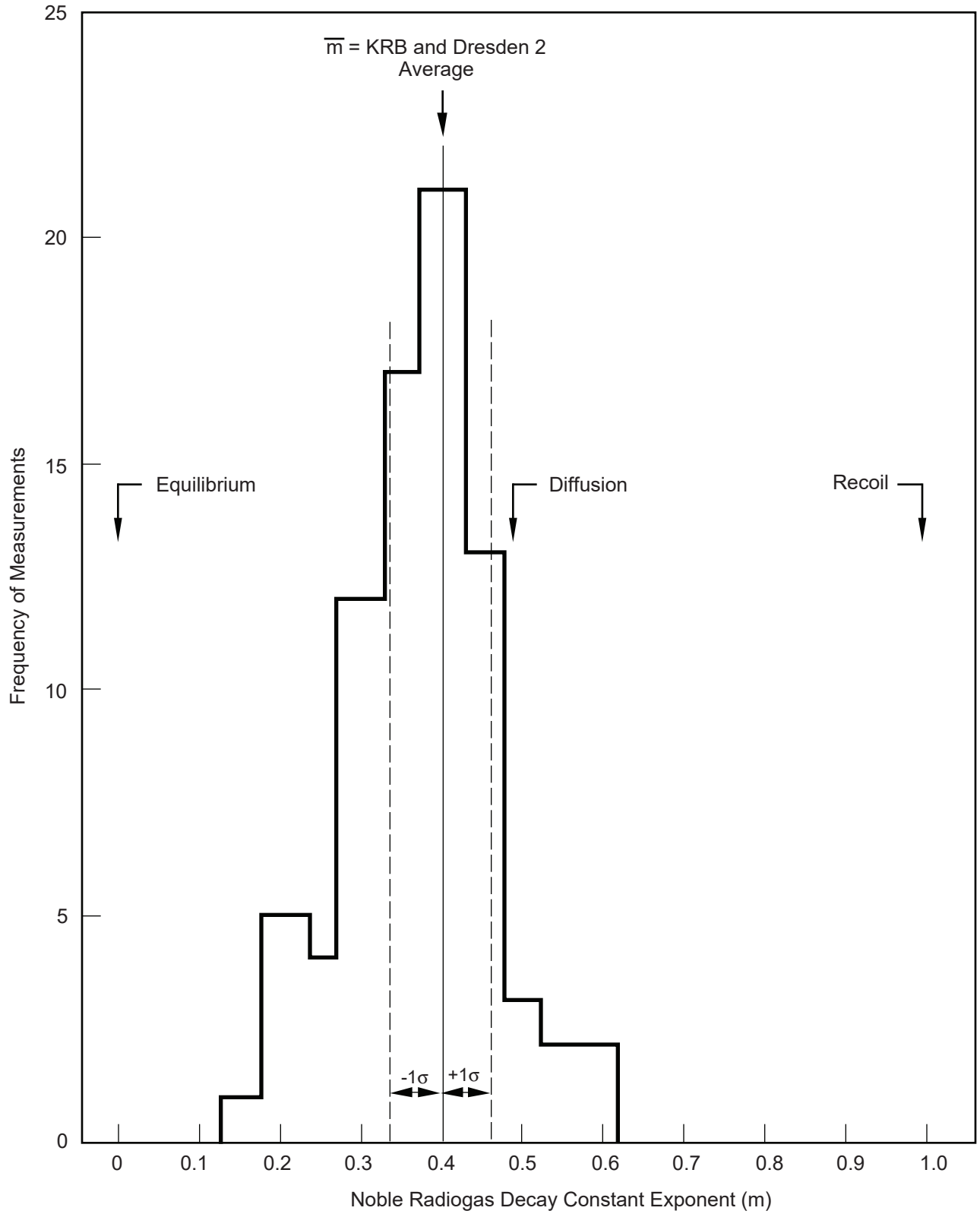

Columbia Generating Station
Final Safety Analysis Report

Noble Radiogas Decay Constant Exponent Frequency Histogram

Draw. No. 900547.45	Rev.	Figure 11.1-1

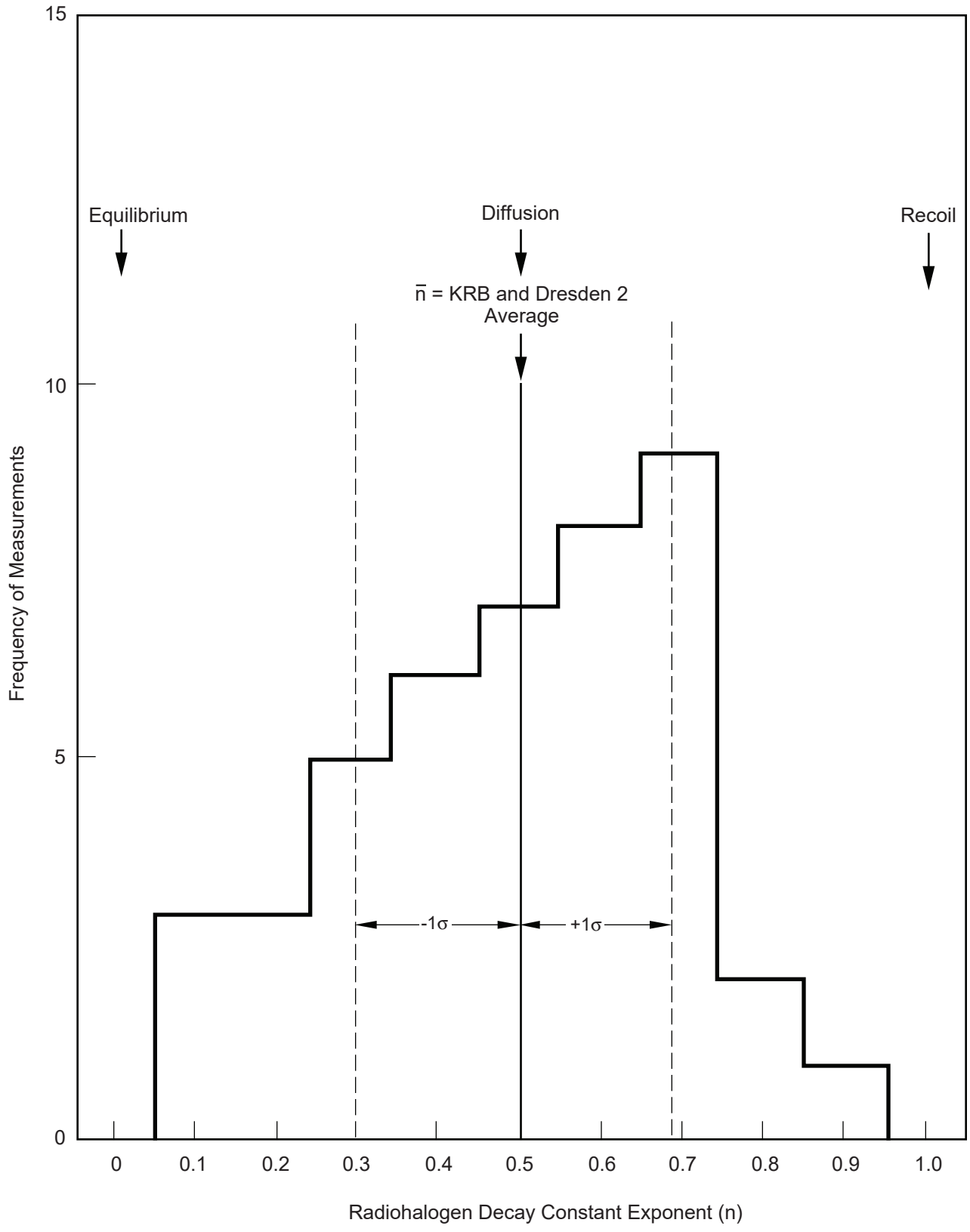

Columbia Generating Station Final Safety Analysis Report	**Radiohalogen Decay Constant Exponent Frequency Histogram**		
	Draw. No. **900547.46**	Rev.	Figure **11.1-2**

Form No. 960690

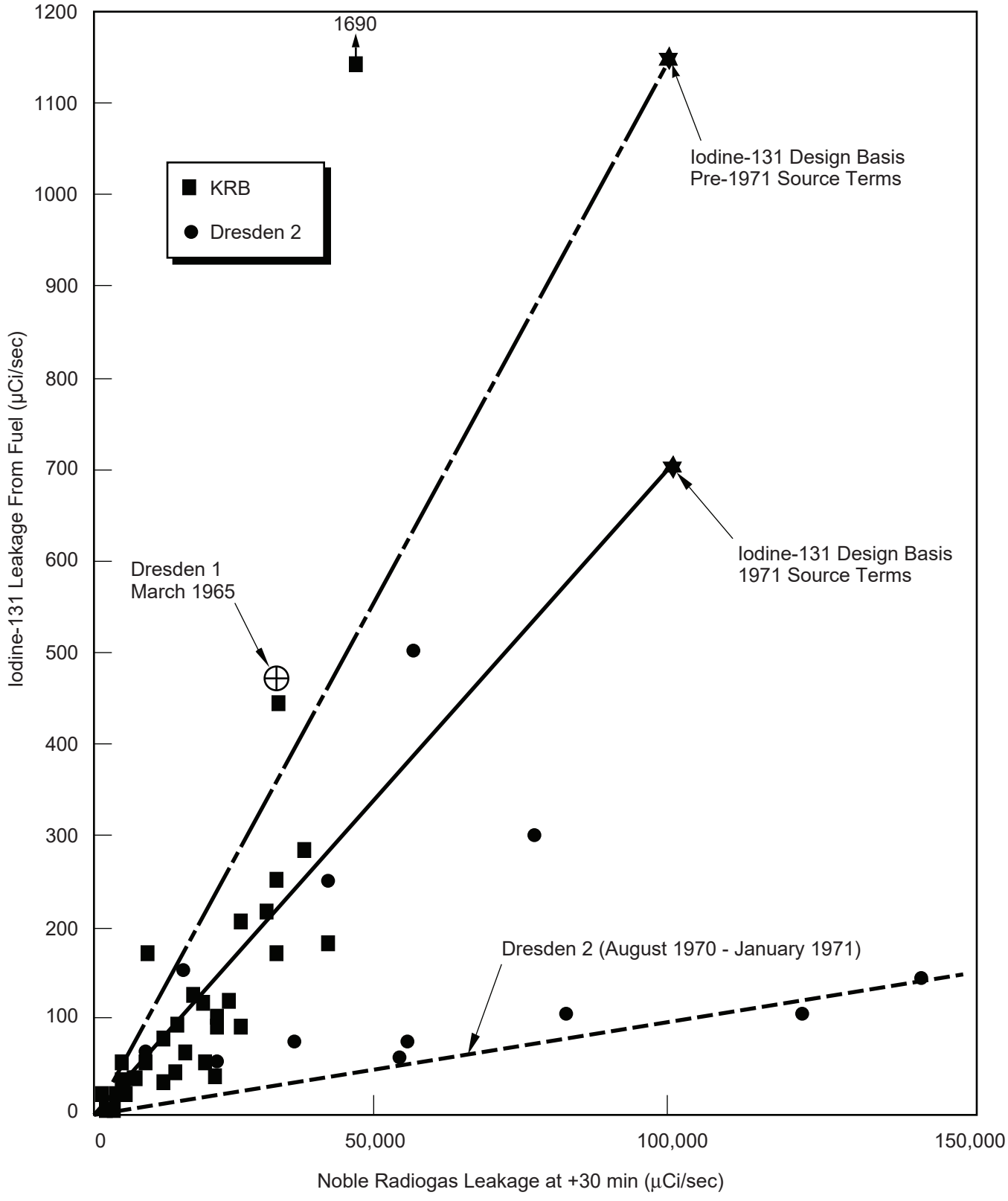

Columbia Generating Station **Final Safety Analysis Report**	**Noble Radiogas Leakage Versus Iodine-131 Leakage**		
	Draw. No. **900547.47**	Rev.	Figure **11.1-3**

11.2 LIQUID WASTE MANAGEMENT SYSTEM

11.2.1 DESIGN BASIS

The liquid waste management system is designed to collect, segregate, store, and process potentially radioactive liquids generated during normal plant operation and anticipated operational occurrences. The design objective is to keep the radiation dose in unrestricted areas as low as is reasonably achievable (ALARA) within the guidelines of Appendix I to 10 CFR 50. The design incorporates the objectives of maximum recycle and minimum release of radioactive liquids without limiting plant operations or availability.

The criteria considered in the design of this system include volume, radioactivity, operational exposure, and required quality for recycle of the processed liquid. Radioisotopic inventories of the components used for the design are listed in Tables 11.2-1 through 11.2-5. These values are based on the reactor water source term associated with the design-basis fuel leakage rate. Allowance is made for concentration, decay and daughter product buildup in filters, demineralizers, and tanks. Equipment locations and arrangements are shown in Section 1.2.

The system is designed to treat process liquids with radioisotope concentrations associated with the design-basis fuel leakage and produce a quality of water which allows its recycle for plant reuse. Water inventory will occasionally require the discharge of processed liquids to the environs, in which case concentrations of radioisotopes in the effluent (Table 11.2-6) will be significantly less than the values specified in 10 CFR 20 and within the release limits established in the Technical Specifications. Radiation exposure to persons in unrestricted areas resulting from liquid waste discharged during normal operation and anticipated operational occurrences is less than the guidelines specified in 10 CFR 50, Appendix I.

Tanks that hold radioactive liquid, including the condensate storage tanks, are monitored for level and alarm primarily in the radwaste control room. Table 11.2-7 lists the design features of the tanks in the radwaste building used to prevent uncontrolled releases due to spillage and shows overflow alarms and drainage paths. The radwaste systems are operated from the radwaste control room; hence, additional local alarms are not required for radwaste tank levels.

All liquid waste management system tank overflows and drains are routed to the radwaste building equipment and floor drain sumps (see Figure 9.3-11). Radioactive liquid samples are primarily routed to sampling sinks. Those samples, which are local, drain into floor drain trenches, equipment or floor drain funnels, and pump beds. The above sample receivers are routed to various radioactive sumps, all of which are processed by the liquid waste management system.

Indoor tanks that hold radioactive liquid are not enclosed by individual curbs or elevated thresholds. The portion of the radwaste building that houses radioactive liquid tanks is Seismic

Category I, as discussed in Section 3.8.4.1.2. The radwaste building can retain the normal operating capacity of all liquid radwaste tanks, which are nonseismic. Analysis of a postulated radioactive release due to a liquid radwaste tank failure is presented in Section 15.7.3.

The radioactive and nonradioactive equipment and floor drains within the plant are segregated. Equipment and floor drains within the reactor building and radwaste building are routed to the liquid waste management system. The turbine building equipment and floor drains are segregated for radioactivity by component source and area (see Section 9.3.3). Although three of the turbine building sumps are designated as collectors of nonradioactive waste water, there is a possibility of low level contamination of the effluent water. One contamination source is steam leaks inside the building which condense on interior surfaces and are routed to floor drains. Because of this possibility, the discharge of these three sumps is routed to the radwaste system for processing.

The design of the system was accomplished prior to the issuance of Regulatory Guide 8.8. However, the system does incorporate substantially the guidance provided in this regulatory guide.

Like the nonradioactive sumps, the storm water drainage system (see Section 9.3.3.2.3.1) is not intended to collect radioactive materials. Nonetheless, radionuclides have been detected in the pond water and sediments. These concentrations are attributed to unanticipated and unavoidable occurrences. For example, special system draindowns during maintenance activities may have contributed minor amounts of tritium and corrosion products. Tritium that leaves the plant as a vapor can condense on building roofs and exterior walls and be carried to the ponds in storm drainage. Also, water treatment filter backwashes that are routed to the ponds can contribute radionuclides which were withdrawn from the river.

The degree of compliance with Regulatory Guide 1.143 is described in Section 1.8.

The liquid waste management system is designed to the requirements of General Design Criteria, Appendix A to 10 CFR 50, as follows:

General Design Criterion 60

The system capacity as required by General Design Criterion 60 is sufficient for the volume of liquid waste expected from normal operation and anticipated operational occurrences such as condenser leakage, maintenance activities, and process equipment down time. Flow rates are listed in Tables 11.2-8 through 11.2-10.

General Design Criterion 64

Radioactivity monitoring in the sample tanks and in the effluent discharge path ensures that excess liquid discharged to the environs does not exceed the limits of 10 CFR 20. Sampled

fluids exceeding these limits are returned to an appropriate collector tank for reprocessing. The radwaste effluent radiation monitoring system is described in Section 11.5.2.2.2.3.

11.2.2 SYSTEM DESCRIPTION

11.2.2.1 Process Description

Radioactive liquid wastes are collected and segregated into three categories: high purity waste, low purity waste, and chemical waste. Wastes thus classified are treated in subsystems designated as equipment drain, floor drain, and chemical waste, respectively.

High purity wastes, treated in the equipment drain subsystem, have low conductivity and relatively high radioactivity concentrations. Radioactive material is removed from these wastes by filtration and ion exchange. Following treatment and batch sampling, the processed waste is normally returned to condensate storage for reuse in plant.

Low purity wastes, treated in the floor drain subsystem, have moderate conductivity and generally low radioactivity. As with high purity wastes, radioactive material is removed by filtration and ion exchange. Following treatment and batch sampling, the processed waste is normally returned to condensate storage for reuse in the plant.

The high conductivity and organic content of chemical wastes preclude normal treatment in the system demineralizers by ion exchange. These wastes can be neutralized by adding appropriate neutralizing agent and thorough mixing. If necessary, following neutralization, these wastes are routed to a backwash tank or phase separator where unexpended ion-exchange capacity of the resins is used to remove contaminants from the chemical waste. After thorough mixing and a period of quiescence to allow the ion-exchange process to proceed, the excess liquid is decanted to the floor drain system for further processing. The spent resins in the separators are then processed as described below.

The installed chemical waste concentrators are currently not used. Their preoperational testing and use has been deferred until a need is identified. There are currently no plans to activate the concentrators.

The installed detergent drain tanks are not normally used. Any wastes requiring disposal are handled on a case-by-case basis and routed for processing and disposal in accordance with plant procedures and regulatory requirements and guidelines.

All liquid radwaste process streams terminate in one of the sample or distillate tanks. Since the liquid waste management system is operated on a batch basis, this arrangement allows each treated batch to be sampled to ensure that the treatment was effective. If the sample indicates that the processed liquid is still above acceptable radioactivity limits or substandard in purity, equipment is provided to either recycle the batch through the same treatment or through a

subsystem providing a higher degree of treatment. If the sample indicates that the level of activity is within limits required to discharge and the water is in excess of inventory capacity or is substandard in purity, the processed liquid may be discharged. The actual release of effluents from any processed and sampled batch tank requires the opening of a key-locked valve in accordance with written operating procedures. All required information regarding the batch release must be documented. These procedures are established to prevent inadvertent release of liquids that have not been suitably processed and analyzed.

Expended ion exchange resins are removed by backwashing to the spent resin tank and phase separators. Excess backwash water is removed from the phase separators by decantation and routed to either the floor drain or equipment drain collector tank for treatment. The powdered resin sludge is accumulated for radioactive decay. Following accumulation of successive layers in the phase separator, the sludge is then transferred to the radwaste processing system for dewatering or solidification. The deep bed resins in the spent resin tank, after a decay period, are also transferred to the solid radwaste processing system. Water separated from the wastes is returned via the waste sludge phase separator to the floor drain collector tank for treatment. The solid waste management system is described in Section 11.4.

Noncondensable gases from the liquid waste processing vessels are vented through the radwaste building exhaust system. This system is described in Section 9.4.3.2.

A process flow diagram, Figure 11.2-1, together with process flow diagram data, Table 11.2-11, show the volumes, flow rates, and radioactivity concentration used in the design of the liquid and solid waste management system.

The radionuclide distribution of liquid waste management system influents is based on the reactor coolant concentrations, as discussed in Section 11.1, taking into consideration mixing and dilution sources.

Decontamination factors which were used for evaluations of the system are those values specified in draft Regulatory Guide 1.CC. Table 11.2-12 shows the process equipment design basis decontamination factors which were used to generate the radioactivity values in Table 11.2-11.

11.2.2.2 Subsystems Description

11.2.2.2.1 Equipment Drain Subsystem

The equipment drain subsystem consists of a waste collector tank, waste surge tank, pressure precoat filter, deep bed demineralizer, two waste sample tanks, and auxiliary equipment necessary to operate the subsystem. Sizes and capacities of the equipment are listed in Table 11.2-13. The waste surge tank principally serves as a receptacle for reactor hydrotest and thermal expansion water and residual heat removal (RHR) system flush water during

startup and testing of these systems. The waste surge tank also serves as backup during equipment downtime. The piping and instrumentation drawing for this subsystem is shown in Figure 11.2-2.

High purity (low solids content) liquid wastes are collected in the waste collector tank from the following sources:

a. Drywell equipment drain sump,
b. Reactor building equipment drain sump,
c. Radwaste building equipment drain sump,
d. Turbine building equipment drain sump,
e. Reactor water cleanup system,
f. RHR system,
g. Cleanup phase separators (decant water),
h. Condensate phase separators (decant water), and
i. Fuel pool seal rupture drains (to waste surge tank).

The quantities of these wastes are summarized in Table 11.2-8. Since these wastes can contain a high percentage of primary reactor water, the radioactive concentration could be relatively high (on the order of 2.4 μCi/ml).

In the event of a component malfunction within the equipment drain subsystem, sufficient cross ties are provided to the floor drain subsystem to permit continued processing of the wastes. Sufficient capacity and treatment capability are provided to handle such conditions.

Normally, the equipment drain subsystem treated effluents are recycled to the condensate storage tanks for reuse within the plant. When condensate storage capacity is not available or the water is substandard in purity, the purified liquid from this subsystem may be sampled, analyzed and, if acceptable for release as described previously, routed to the blowdown line for discharge. Liquid waste that is unacceptable for discharge is reprocessed.

11.2.2.2.2 Floor Drain Subsystem

The floor drain subsystem consists of a floor drain collector tank, pressure precoat filter, deep bed demineralizer, sample tank, and auxiliary equipment necessary to operate the subsystem. Sizes and capacities of the equipment are listed in Table 11.2-13. The flow diagram for this subsystem is shown in Figure 11.2-3.

Intermediate purity liquid wastes are collected in the floor drain collector tank from the following sources:

a. Drywell floor drain sump,
b. Reactor building floor drain sumps,

c. Radwaste building floor drain sumps,
d. Turbine building floor drain sump, and
e. Waste sludge phase separator (decant water).

The quantities of these wastes are summarized in Table 11.2-9. These wastes are normally of intermediate purity (50 mho/cm and higher) and have radioactive concentrations on the order of 0.1 μCi/ml.

Similar to the equipment drain subsystem, the floor drain subsystem normally functions as an independent process stream. Equipment redundancy and intersystem cross ties have been provided to allow substitution for any failed component.

High purity effluent is routed to condensate storage for reuse in the plant. When condensate storage capacity is exceeded or the processed liquid is substandard in purity, it may be discharged via the blowdown line, if it meets acceptable limits.

11.2.2.2.3 Chemical Waste Subsystem

The chemical waste subsystem consists of two of each of the following: detergent drain tanks, chemical waste tanks, decontamination solution concentrators, decontamination solution concentrated waste tanks, and distillate tanks. It contains also a polishing (deep bed) demineralizer and auxiliary equipment necessary to operate the subsystem. Sizes and capacities of the equipment are listed in Table 11.2-13. The flow diagram for this subsystem is shown in Figure 11.2-4. The decontamination solution concentrators, concentrated waste tanks, distillate tanks, and polishing demineralizer have been installed but will not be used until plant operating experience indicates a need and system testing is accomplished. Chemical wastes are currently processed by routing to a backwash tank or phase separator for use of unexpended ion-exchange capacity of the resins to clean the water prior to decanting to the floor drain subsystem for further processing.

Chemical wastes collected in the chemical waste tank are from the following sources:

a. Detergent drains,
b. Shop decontamination solutions,
c. Reactor and turbine building decontamination drains,
d. Low purity wastes from either the equipment or floor drain subsystems,
e. Filter demineralizer element chemical cleaning solutions,
f. Battery room drains,
g. Chemical system overflows and tank drains, and
h. Laboratory drains.

The quantities of these wastes are summarized in Table 11.2-10. These chemical wastes are of such high conductivity and organic content as to preclude normal treatment by ion exchange,

and the radioactivity concentrations are variable. These wastes are processed by routing to a backwash tank or phase separator and to the floor drain system for further processing.

If the concentrators were ever activated, the evaporator concentrates would be processed by the solid waste management system and the distillate would be routed to the distillate tank. After analysis, the distillate could be routed through a polishing demineralizer to further reduce impurities, recycled through the evaporator, or sent directly to condensate storage for plant reuse. As with the other subsystems, when high purity water storage capacity is exceeded or the processed liquid is of substandard purity, liquid within 10 CFR 20 release limits could be discharged via the blowdown line.

11.2.2.2.4 Shared Equipment

Other than serving as mutual backup, main process equipment normally is not shared between subsystems. Auxiliary equipment not in the direct process stream is shared between subsystems. Shared equipment includes the following:

a. The waste precoat tank and waste precoat pump are shared between the waste collector filter and the floor drain filter,

b. The waste filter aid tank is shared between the waste collector filter and floor drain filter,

c. The resin addition tank is shared between the waste demineralizer, floor drain demineralizer, and polishing demineralizer, and

d. The chemical addition tanks, caustic and acid, and associated pumps are shared between the waste collector tank, floor drain collector tank, detergent tanks, and chemical waste tanks.

11.2.2.2.5 Surge Capacities

The radwaste system process data is the basis for sizing of the equipment. Tables 11.2-8, 11.2-9, and 11.2-10 list startup flows, daily flows, and maximum flows for the equipment drain subsystem, floor drain subsystem and chemical waste subsystem, respectively. Anticipated operational occurrences such as startup operations, equipment malfunction, and shutdown operations are accounted for in these tabulations. The bases for these types of values are presented in NEDO-10951, “Releases from BWR Radwaste Management Systems,” July 1973.

The surge storage and process capacities can be envisioned by comparing the normal and maximum daily volumes, listed in Table 11.2-11, with the design flow rates of pumps and tank volumes listed in Table 11.2-13. Alternate processing rather than bypass operations are used

during equipment downtime. The equipment and floor drain subsystems are sized such that with either subsystem inoperative, the remaining subsystem is capable of processing the maximum expected volume of both subsystems. Additionally, the waste surge tank provides reserve storage capacity. The chemical waste subsystem incorporates two parallel processing paths. Cross connections allow individual components from either process path to serve as a substitute in the other process path. The parallel path processing and adequate storage capacity ensures that inoperability of any component in this subsystem will not limit plant operation.

11.2.2.2.6 Design Features

The design pressures and temperatures for individual components are listed in Table 11.2-13. Collection and storage tanks are designed for atmospheric pressure. The mixed-bed demineralizer units, precoat filter units, and concentrators are pressure vessels. The quality classification for the system is Quality Group D+ as defined in Section 3.2.

Chapter 12 discusses the design features incorporated in the system to maintain occupational exposure ALARA. As shown in the general arrangement drawings in Section 1.2, the radwaste processing equipment is located in shielded rooms and cells. Process lines that penetrate shield walls are routed to prevent a direct radiation path from the tanks and equipment to normally occupied areas.

Control of the liquid waste management system is from a shielded radwaste control room and from shielded local operating galleries. Flanges are provided where required for maintenance in an otherwise all-welded system. The cells and concrete rooms provide secondary enclosures which facilitate collection of spills or leaks from the system for processing. Vessels that may have their contents mixed with air or that may have batches transferred into them by means of pneumatic transfer are closed and vented to the radwaste building ventilation system. Piping and tubing 2 in. and under is field routed but required to be in specified space envelopes for shielding and in-plant exposure consideration.

The liquid waste management system is designed to minimize the effects of equipment malfunction and operator error. After initiation by the operator, valve positioning, equipment startup, and system operation can be automatically performed by a process controller. Failure of any valve to properly align stops the sequence and prevents a pump start. Once on line, processing continues until the feed volume is processed or the capacity of a piece of process equipment is reached. In either case, automatic shutdown occurs with valves returning to the shutdown position. During initial system startup or in the event of controller failure, the processes are manually controlled. System variables, such as tank levels, flow rates, pressures, and conductivity are indicated and alarmed in the radwaste control room.

The discharge from the liquid waste subsystems to the blowdown line is normally isolated by a closed manual valve and a key-locked closed manual valve separated by a telltale drain. This path is further protected by air-operated isolation valves, flow control valves, flow indication

and radiation monitoring instrumentation. These design features are complimented by administrative procedures which prevent inadvertent radioactive liquid releases and releases of liquids that exceed the Technical Specifications release limit.

11.2.3 RADIOACTIVE RELEASES

The decision to recycle or to release a particular batch of processed liquid is based on plant water inventory and the type and concentration of chemical impurities being processed. It is not expected that tritium buildup in the plant will determine the frequency of releases. Concentration of radionuclides released to the environment will be significantly less than those values specified in 10 CFR 20. The quantities of radioactive materials released during normal operation will not result in dose rates to persons in unrestricted areas in excess of 10 CFR 50, Appendix I, values as implemented by the Technical Specifications release limits.

11.2.3.1 Release Point and Dilution

Excess liquid effluent is discharged to the circulating water blowdown line at a variable rate up to about 190 gpm. Dilution is furnished by circulating water system blowdown when required or when normal blowdown is in progress. The circulating water blowdown line terminates in the Columbia River. Applicable concentration limits specified in 10 CFR 20 apply at the point of discharge to the river.

The storm water drainage ponds described in Section 9.3.3.2.3.1 are a point of release of detectable radionuclides. For the reasons discussed in Section 11.2.1, most of the activity is believed to be either condensed gaseous effluent or material of external origin. The ponds are within a plant restricted area (see Section 2.1.1.3), and public access is restricted by a fence which surrounds the ponds.

11.2.3.2 Calculation of Releases of Radioactive Materials

Quantities of radioactive materials released with liquids were calculated for initial plant licensing using the GALE code presented in draft Regulatory Guide 1.CC to show compliance with Appendix I to 10 CFR 50 for normal operation plus anticipated operational occurrences. The plant operational parameters, including source terms, were those presented in Appendix B of the guide with waste stream flow rates adjusted to the Columbia Generating Station plant design. The calculated quantities of radioactive materials released with liquids used for initial plant licensing are presented in Table 11.2-14 in terms of curies per year. The radionuclide concentrations in the effluent are presented in Table 11.2-6 and are compared with the values of 10 CFR 20, Appendix B, Table II, Column 2.

Since becoming operational, releases of radioactive materials in liquid effluents have been determined using actual flow volumes and quantitative and qualitative laboratory analyses. Doses due to radioactive materials released in liquid effluents are determined to be in

compliance with Technical Specifications at specified intervals. Compliance is reported in the Annual Radioactive Effluent Release Report using the NRC LADTAP II computer code along with parameters outlined in the Offsite Dose Calculation Manual.

11.2.3.3 Exposure of Persons at or Beyond the Site Boundary

Estimated annual exposure of persons in unrestricted areas resulting from liquid effluents (Table 11.2-6) is discussed in Section 5.2 of the Environmental Report, Operating License stage. The estimated total body dose of 2.3 mrem per year and largest calculated single organ dose of 1.6 mrem per year to the bone are well within the guidelines of 10 CFR 50, Appendix I.

11.2.3.4 Cost-Benefit Analysis

It has been determined that a cost-benefit analysis, as described in Appendix I to 10 CFR 50 Section II.D is not required for Columbia Generating Station.

The question of eligibility of Columbia Generating Station to dispense with the Appendix I cost-benefit analysis as to "per site" limitations was reviewed by the NRC in connection with their review of WPPSS Nuclear Project No. 1 (WNP-1) and WPPSS Nuclear Project No. 4 (WNP-4), Docket Nos. 50-460 and 50-513. The Staff concluded in its testimony at the Atomic Safety and Licensing Board (ASLB) hearing for WNP-1 and WNP-4 held on November 11, 1975, that

> The aggregate doses associated with WPPSS Nuclear Project No. 1, WPPSS Project No. 2, and WPPSS Nuclear Project No. 4 operation meet the RM-50-2 (i.e., Annex) design objectives [Tr. 724-727].

These conclusions were ratified by the ASLB on its decision pertaining to WNP-1 and WNP-4 of December 22, 1975, RAI-75/12 922, 934.

Table 11.2-1

Liquid Waste Management System Radioisotope Inventory
Equipment Drain Subsystem

Radioisotope	Radioisotope Inventory (μCi)			
	Waste Collector Tank[a]	Waste Filter[a]	Waste Demineralizer[a]	Waste Sample Tank[a]
^{83}Br	4.53E4		3.15E4	3.18E2
^{84}Br	4.67E4		9.19E3	9.28E1
^{85}Br	1.17E4		4.17E-4	4.21E-6
^{89}Sr	4.35E4		1.88E6	4.35E2
^{90}Sr	3.25E3		2.12E5	3.25E1
^{91}Sr	7.12E5		1.10E6	9.13E3
^{92}Sr	3.40E5		2.48E5	2.50E3
^{90}Y	3.53E2		2.00E5	3.92E0
^{91}Y	4.21E3		5.10E5	4.69E1
^{91M}Y	4.12E5		7.31E5	5.82E3
^{92}Y	2.15E5		2.37E5	2.33E3
^{95}Zr	5.63E2	2.81E2	1.31E4	5.62E0
^{97}Zr	6.94E1	1.73E1	1.70E1	3.46E-1
^{95}Nb	5.93E2	2.97E2	1.69E4	5.93E0
^{99}Mo	2.79E5	1.38E5	6.13E5	2.75E3
^{99M}Tc	1.70E6	8.18E3	2.02E6	1.51E4
^{101}Tc	2.05E5		5.15E3	5.20E1
^{103}Ru	2.66E2	1.33E2	5.17E3	2.66E0
^{106}Ru	3.67E1	1.84E1	1.12E3	3.67E-1
^{129M}Te	5.60E2		2.00E4	5.59E0
^{129}Te	3.03E2		1.27E4	3.31E0
^{132}Te	6.30E5		3.21E6	6.23E3
^{129}I	2.83E-8		9.76E-5	3.16E-10
^{131}I	1.77E5		2.12E6	1.76E3
^{132}I	8.53E5		3.45E6	7.83E3
^{133}I	9.03E5		1.57E6	8.67E3
^{134}I	4.66E5		1.75E5	1.77E3
^{135}I	7.73E5		7.35E5	6.80E3
^{134}Cs	2.26E3		1.44E5	2.26E1
^{135}Cs	4.19E-5		1.97E-2	5.95E-7
^{136}Cs	1.52E3		2.80E4	1.51E1
^{137}Cs	3.39E3		2.21E5	3.39E1
^{138}Cs	3.29E5		6.54E4	6.60E2
^{137M}Ba	2.99E3		2.07E5	3.17E1

Table 11.2-1

Liquid Waste Management System Radioisotope Inventory
Equipment Drain Subsystem (Continued)

Radioisotope	Radioisotope Inventory (μCi)			
	Waste Collector Tank[a]	Waste Filter[a]	Waste Demineralizer[a]	Waste Sample Tank[a]
^{139}Ba	3.67E5		1.98E5	2.00E3
^{140}Ba	1.24E5		2.29E6	1.24E3
^{141}Ba	2.64E5		1.50E4	1.52E2
^{142}Ba	2.32E5		2.14E3	2.16E1
^{141}Ce	1.18E3	5.99E2	3.04E4	1.22E1
^{143}Ce	3.98E2	1.94E2	4.80E2	3.88E0
^{144}Ce	4.94E2	2.47E2	1.48E4	4.94E0
^{140}La	2.07E4		2.28E6	2.29E2
^{141}La	3.66E4		4.61E4	4.60E2
^{142}La	2.34E4		3.08E4	3.11E2
^{143}Pr	5.37E2	2.69E2	1.71E4	5.37E0
^{144}Pr	4.40E2	2.46E2	1.48E4	4.91E0
^{147}Nd	1.92E2	9.59E1	1.52E3	1.92E0
^{239}NP	2.98E6		1.13E7	2.93E4
^{24}Na	1.80E4		2.52E4	1.70E2
^{32}P	2.77E2		5.54E3	2.76E0
^{51}Cr	6.99E3	3.49E3	1.10E5	6.98E1
^{54}Mn	5.65E2	2.82E2	1.70E4	5.65E0
^{56}Mn	1.58E5	5.67E4	5.57E4	1.13E3
^{58}Co	7.04E4	3.52E4	1.68E6	7.03E2
^{60}Co	7.07E3	3.53E4	2.26E5	7.07E1
^{59}Fe	1.12E3	5.61E2	2.30E4	1.12E1
^{65}Ni	9.40E2	3.36E2	3.30E2	6.73E0
^{65}Zn	2.82E1		1.67E3	2.82E-1
^{69M}Zn	2.63E2		3.52E2	2.47E0
^{110M}Ag	8.47E2	4.24E2	2.52E4	8.47E0
^{187}W	3.16E4	1.53E4	2.99E4	3.05E2

[a] The radioisotope inventory listed above for the waste collector tank, waste filter, waste demineralizer, and waste sample tank is assumed to be applicable to the floor drain collector tank, floor drain filter, floor drain demineralizer, and floor drain sample tank, respectively. This is done for the purpose of shielding analysis. In actuality, the radionuclide inventory in any component of the floor drain system is discussed in Sections 11.2.2.2.1 and 11.2.2.2.2. The values from the equipment drain subsystem are maximum due to cross-ties for alternate processing.

Table 11.2-2

Liquid Waste Management System Radioisotope Inventory
Chemical Waste Subsystem

Radioisotope	Radioisotope Inventory (μCi)				
	Chemical Waste Tank	DSC Waste Tank[a]	DSC Waste Measuring Tank[b]	Distillate Tank	Decon. Solution Concentrator
^{83}Br					
^{84}Br					
^{85}Br					
^{89}Sr	1.11E3	2.82E3	1.74E3	1.11E0	1.48E3
^{90}Sr	7.87E1	2.00E2	1.23E2	7.87E-2	1.05E2
^{91}Sr					
^{92}Sr					
^{90}Y					
^{91}Y					
^{91M}Y					
^{92}Y					
^{95}Zr	1.43E1	3.65E1	2.25E1	1.43E-2	1.92E1
^{97}Zr					
^{95}Bv					
^{99}Mo	7.87E3	2.00E4	1.23E4	7.87E0	1.05E4
^{99M}Tc					
^{101}Tc					
^{103}Ru					
^{106}Ru					
^{129M}Te	1.43E1	3.65E1	2.25E1	1.43E-2	1.92E1
^{129}Te					
^{132}Te	1.75E4	4.45E4	2.75E4	1.75E1	2.34E4
^{129}I					
^{131}I	4.65E3	1.13E4	6.95E3	4.65E0	5.92E3
^{132}I					
^{133}I					
^{134}I					
^{135}I					
^{134}Cs	5.75E1	1.46E2	9.02E1	5.75E-2	7.68E1
^{135}Cs					
^{136}Cs	3.94E1	1.00E2	6.19E1	3.94E-2	5.27E1
^{137}Cs	8.60E1	2.19E2	1.35E2	8.60E-2	1.15E2

Table 11.2-2

Liquid Waste Management System Radioisotope Inventory
Chemical Waste Subsystem (Continued)

Radioisotope	Radioisotope Inventory (μCi)				
	Chemical Waste Tank	DSC Waste Tank[a]	DSC Waste Measuring Tank[b]	Distillate Tank	Decon. Solution Concentrator
^{138}Cs					
^{137M}Ba					
^{139}Ba					
^{140}Ba	3.22E3	8.18E3	5.05E3	3.22E0	4.30E3
^{141}Ba					
^{142}Ba					
^{141}Ce	1.40E1	3.56E1	2.20E1	1.40E-2	1.87E1
^{143}Ce	1.25E1	3.17E1	1.96E1	1.25E-2	1.67E1
^{144}Ce	1.25E1	3.17E1	1.96E1	1.25E-2	1.67E1
^{140}La					
^{141}La					
^{142}La					
^{143}Pr	1.36E1	3.44E1	2.12E1	1.36E-2	1.81E1
^{144}Pr					
^{147}Nd	5.01E0	1.27E1	7.85E0	5.01E-3	6.69E0
^{239}Np	8.60E4	2.19E5	1.35E5	8.60E1	1.15E5
^{24}Na					
^{32}P	7.18E0	1.82E1	1.13E1	7.18E-3	9.58E0
^{51}Cr	1.79E2	4.54E2	2.80E2	1.79E-1	2.38E2
^{54}Mn	1.43E1	3.65E1	2.25E1	1.43E-2	1.92E1
^{56}Mn					
^{58}Co	1.79E3	4.54E3	2.80E3	1.79E0	2.38E3
^{60}Co	1.79E2	4.54E2	2.80E2	1.79E-1	2.38E2
^{59}Fe	2.87E1	7.26E1	4.48E1	2.87E-2	3.82E1
^{65}Ni					
^{65}Zn	7.18E-1	1.82E0	1.13E0	7.18E-4	9.58E-1
^{69M}Zn					
^{110M}Ag	2.15E1	5.46E1	3.37E1	2.15E-2	2.87E1
^{187}W					

[a] Decontamination solution concentrator waste tank.
[b] Decontamination solution concentrator waste measuring tank.

Table 11.2-3

Liquid Waste Management System Radioisotope Inventory
RWCU and Condensate Filter Demineralizers

Radioisotope	Radioisotope Inventory (μCi)	
	RWCU Filter Demineralizer	Condensate Filter Demineralizer
^{83}Br	2.50E6	2.30E5
^{84}Br	9.00E5	9.12E4
^{85}Br	3.00E4	5.42E3
^{89}Sr	1.40E7	3.00E5
^{90}Sr	1.10E6	2.56E4
^{91}Sr	3.20E7	2.13E5
^{92}Sr	1.60E7	9.12E4
^{90}Y	1.10E6	2.09E4
^{91}Y		4.54E4
^{91M}Y	2.20E7	1.28E5
^{92}Y		9.12E4
^{95}Zr	1.80E5	2.59E4
^{97}Zr	2.40E4	8.19E1
^{95}Nb	5.60E5	2.97E4
^{99}Mo	5.50E7	3.04E6
^{99M}Tc	2.40E7	3.18E6
^{101}Tc	1.90E6	1.04E4
^{103}Ru	9.00E4	1.16E4
^{106}Ru	1.20E4	1.85E3
^{129M}Te	1.50E6	3.60E3
^{129}Te		2.29E3
^{132}Te	3.70E7	1.20E6
^{129}I		4.89E-6
^{131}I	8.50E7	1.34E7
^{132}I	5.80E7	2.96E6
^{133}I	1.40E8	1.19E7
^{134}I	1.40E7	1.35E6
^{135}I	6.50E7	5.55E6
^{134}Cs	7.50E5	1.77E4
^{135}Cs		2.48E-2
^{136}Cs	4.20E5	7.37E3
^{137}Cs	1.20E6	2.67E4
^{138}Cs	5.50E6	3.23E4
^{127M}Ba	1.20E6	2.50E4

Table 11.2-3

Liquid Waste Management System Radioisotope Inventory
RWCU and Condensate Filter Demineralizers (Continued)

Radioisotope	Radioisotope Inventory (μCi)	
	RWCU Filter Demineralizer	Condensate Filter Demineralizer
^{139}Ba	1.20E7	7.23E4
^{140}Ba	3.60E7	6.03E5
^{141}Ba	3.00E6	1.63E4
^{142}Ba	1.60E6	9.94E3
^{141}Ce	1.80E5	2.86E4
^{143}Ce	5.00E4	2.40E3
^{144}Ce	1.60E5	2.47E4
^{140}La	4.10E7	5.60E5
^{141}La		1.63E4
^{142}La		9.94E3
^{143}Pr	1.60E5	2.74E4
^{144}Pr		2.47E4
^{147}Nd	5.50E4	5.65E3
^{239}Np	5.00E8	4.27E6
^{24}Na	1.50E6	9.56E3
^{32}P	9.50E4	1.40E3
^{51}Cr	2.60E6	2.80E5
^{54}Mn	2.20E5	2.83E4
^{56}Mn	6.00E6	2.69E5
^{58}Co	2.60E7	3.27E6
^{60}Co	2.80E6	3.61E5
^{59}Fe	4.30E5	4.96E4
^{65}Ni	3.80E4	1.59E3
^{65}Zn	1.10E4	2.16E2
^{69M}Zn	2.00E4	1.34E2
^{110M}Ag	3.40E5	4.24E4
^{187}W	3.60E6	1.49E5

Table 11.2-4

Liquid Waste Management System Radioisotope Inventory
Spent Resin and Condensate Backwash Receiving Tanks

Radioisotope	Radioisotope Inventory (μCi)	
	Spent Resin Tank	Condensate Backwash Receiving Tank
^{83}Br	3.15E4	2.30E5
^{84}Br	9.19E3	9.12E4
^{85}Br	4.17E-4	5.42E3
^{89}Sr	1.88E6	3.00E5
^{90}Sr	2.12E5	2.56E4
91Sr	1.10E6	2.13E5
^{92}Sr	2.48E5	9.12E4
^{90}Y	2.00E5	2.09E4
^{91}Y	5.10E5	4.54E4
^{91M}Y	7.31E5	1.28E5
^{92}Y	2.37E5	9.12E4
^{95}Zr	1.31E4	2.59E4
^{97}Zr	1.70E1	8.19E1
^{95}Nb	1.69E4	2.97E4
^{99}Mo	6.13E5	3.04E6
^{99M}Tc	2.02E6	3.18E6
^{101}Tc	5.15E3	1.04E4
^{103}Ru	5.17E3	1.16E4
^{106}Ru	1.12E3	1.85E3
^{129M}Te	2.00E4	3.60E3
^{129}Te	1.27E4	2.29E3
^{132}Te	3.21E6	1.20E6
^{129}I	9.76E-5	4.89E-6
^{131}I	2.12E6	1.34E7
^{132}I	3.45E6	2.96E6
^{133}I	1.57E6	1.19E7
^{134}I	1.75E4	1.35E6
^{135}I	7.35E4	5.55E6
^{134}Cs	1.44E4	1.77E4
^{135}Cs	1.97E-2	2.48E-2
^{136}Cs	2.80E4	7.37E3
^{137}Cs	2.21E5	2.67E4
^{138}Cs	6.54E4	3.23E4
^{137M}Ba	2.07E5	2.50E4

Table 11.2-4

Liquid Waste Management System Radioisotope Inventory
Spent Resin and Condensate Backwash Receiving Tanks (Continued)

Radioisotope	Radioisotope Inventory (μCi)	
	Spent Resin Tank	Condensate Backwash Receiving Tank
^{139}Ba	1.98E5	7.23E4
^{140}Ba	2.29E6	6.03E5
^{141}Ba	1.50E4	1.63E4
^{142}Ba	2.14E3	9.94E3
^{141}Ce	3.04E4	2.86E4
^{143}Ce	4.80E2	2.40E3
^{140}Ce	1.48E4	2.47E4
^{141}La	2.28E6	5.60E5
^{141}La	4.61E4	1.63E4
^{142}La	3.08E4	9.94E3
^{143}Pr	1.71E4	2.74E4
^{144}Pr	1.48E4	2.47E4
^{147}Nd	1.52E3	5.65E3
^{239}Np	1.13E7	4.27E6
^{24}Na	2.52E4	9.56E3
^{32}P	5.54E3	1.40E3
^{51}Cr	1.10E5	2.80E5
^{54}Mn	1.70E4	2.83E4
^{56}Mn	5.57E4	2.69E5
^{58}Co	1.68E6	3.27E6
^{60}Co	2.26E5	3.61E5
^{59}Fe	2.30E4	4.96E4
^{65}Ni	3.30E2	1.59E3
^{65}Zn	1.67E3	2.16E2
^{69M}Zn	3.52E2	1.34E2
^{110M}Ag	2.52E4	4.24E4
^{187}W	2.99E4	1.49E5

Table 11.2-5

Liquid Waste Management System Radioisotope Inventory
Phase Separators

Radioisotope	Radioisotope Inventory (μCi)		
	RWCU Phase Separator	Condensate Phase Separator	Waste Sludge Phase Separator
^{83}Br	4.95E6	2.26E5	
^{84}Br	1.71E6	7.04E4	
^{85}Br	3.73E4	8.21E2	
^{89}Sr	3.48E8	2.94E6	
^{90}Sr	3.95E7	3.23E5	
^{91}Sr	6.40E7	2.21E5	
^{92}Sr	3.17E7	8.98E4	
^{90}Y	3.95E7	3.15E5	
^{91}Y	5.66E6	4.76E5	
^{91M}Y	4.40E7	1.35E5	
^{92}Y	2.33E5	9.57E4	
^{95}Zr	4.83E6	2.55E5	3.70E1
^{97}Zr	4.70E4	7.14E1	4.53E-1
^{95}Nb	1.41E7	3.29E5	3.96E1
^{99}Mo	1.93E8	5.23E6	1.35E4
^{99M}Tc	1.27E8	2.17E6	8.76E3
^{101}Tc	3.41E6	7.67E-2	
^{103}Ru	2.06E6	1.36E5	1.74E1
^{106}Ru	4.09E5	2.14E4	2.45E0
^{129M}Te	3.15E7	3.48E-4	
^{129}Te	1.82E7	2.07E3	
^{132}Te	1.43E8	2.40E6	
^{129}I	1.29E-1	6.20E-5	
^{131}I	6.70E8	5.31E7	
^{132}I	1.87E8	4.16E6	
^{133}I	3.00E8	1.33E7	
^{134}I	2.72E7	1.18E6	
^{135}I	1.30E8	5.69E6	
^{134}Cs	2.63E7	2.19E5	
^{135}Cs	1.98E-1	3.48E-1	
^{136}Cs	4.00E6	4.07E4	
^{137}Cs	4.31E7	3.37E5	
^{138}Cs	1.05E7	2.50E4	

Table 11.2-5

Liquid Waste Management System Radioisotope Inventory
Phase Separators (Continued)

Radioisotope	Radioisotope Inventory (μCi)		
	RWCU Phase Separator	Condensate Phase Separator	Waste Sludge Phase Separator
^{137M}Ba	4.00E7	3.14E5	
^{139}Ba	2.36E7	6.74E4	
^{140}Ba	4.18E8	3.33E6	
^{141}Ba	5.51E6	1.01E4	
^{142}Ba	2.79E6	4.69E3	
^{141}Ce	3.80E6	2.37E5	7.78E1
^{143}Ce	1.22E5	2.88E3	1.46E1
^{144}Ce	5.37E6	2.83E5	3.29E1
^{140}La	4.78E8	3.64E6	
^{141}La	3.86E4	5.32E2	
^{142}La	4.89E4	6.33E2	
^{143}Pr	5.68E6	3.26E5	3.59E1
^{144}Pr	5.08E6	2.83E5	3.29E1
^{147}Nd	5.61E5	2.66E4	1.18E1
^{239}Np	1.57E9	6.92E6	
^{24}Na	3.07E6	1.02E4	
^{32}P	1.19E6	8.19E3	
^{51}Cr	4.93E7	2.15E6	4.50E2
^{54}Mn	7.43E6	3.26E5	3.76E1
^{56}Mn	1.19E7	2.52E5	1.52E3
^{58}Co	7.14E8	3.27E7	4.64E3
^{60}Co	9.98E7	4.30E6	4.72E2
^{59}Fe	1.03E7	4.50E5	7.35E1
^{65}Ni	7.52E4	1.49E3	9.01E0
^{65}Zn	3.63E5	2.57E3	
^{69M}Zn	4.06E4	1.41E2	
^{110M}Ag	1.14E7	4.84E5	5.64E1
^{187}W	7.95E6	1.63E5	9.81E2

Table 11.2-6

Annual Average Concentration of Radionuclides in Liquid Effluent

Nuclide	Effluent Concentration (μCi/ml)	10 CFR 20 Table II (μCi/ml)	Fraction of 10 CFR 20 Effluent/10 CFR 20
^{24}Na	1.3E-9	5E-5	0.000026
^{32}P	5.2E-11	9E-6	0.00000575
^{51}Cr	1.3E-9	5E-4	0.0000026
^{54}Mn	1.6E-11	3E-5	0.000000533
^{56}Mn	1.4E-9	7E-5	0.00002
^{55}Fe	2.8E-10	1E-4	0.0000028
^{59}Fe	8E-12	1E-5	0.00000008
^{58}Co	5.4E-11	2E-5	0.0000027
^{60}Co	1.1E-10	3E-6	0.0000367
^{65}Ni	8E-12	1E-4	0.00000008
^{64}Cu	4E-9	2E-4	0.00002
^{65}Zn	5.4E-11	5E-6	0.000011
^{69m}Zn	2.8E-10	6E-5	0.00000467
^{69}Zn	3E-10	8E-4	0.000000375
^{187}W	5.4E-11	3E-5	0.0000018
^{239}Np	1.6E-9	2E-5	0.00008
^{83}Br	7.2E-11	9E-4	0.00000008
^{84}Br	6E-12	4E-4	0.000000015
^{89}Rb	4.2E-11	9E-4	0.0000000467
^{89}Sr	2.8E-11	8E-6	0.0000035
^{91}Sr	4.4E-10	2E-5	0.000022
^{91m}Y	2.8E-10	2E-3	0.00000014
^{91}Y	1.4E-11	8E-6	0.00000175
^{92}Sr	3E-10	4E-5	0.0000075
^{92}Y	6.2E-10	4E-5	0.0000155
^{93}Y	4.6E-10	2E-5	0.000023
^{98}Nb	1.6E-11	2E-4	0.00000008
^{99}Mo	4.6E-10	2E-5	0.000023
^{99m}Tc	1.8E-9	1E-3	0.0000018
^{101}Tc	4E-12	2E-3	0.000000002
^{103}Ru	6E-12	3E-5	0.0000002

Table 11.2-6

Annual Average Concentration of Radionuclides in Liquid Effluent (Continued)

Nuclide	Effluent Concentration (μCi/ml)	10 CFR 20 Table II (μCi/ml)	Fraction of 10 CFR 20 Effluent/10 CFR 20
^{103m}Rh	6E-12	6E-3	0.000000001
^{104}Tc	1.2E-11	4E-4	0.00000003
^{105}Ru	1.1E-10	7E-5	0.00000165
^{105m}Rh	1.2E-10	--	--
^{105}Rh	3.8E-11	5E-5	0.00000076
^{129m}Te	1E-11	7E-6	0.00000150
^{129}Te	6E-12	4E-4	0.00000016
^{131m}Te	2E-11	8E-6	0.0000026
^{131}Te	4E-12	8E-5	0.00000005
^{131}I	1.4E-9	1E-6	0.0014
^{132}Te	2E-12	9E-6	0.000000233
^{132}I	7E-10	1E-4	0.000007
^{133}I	3.6E-9	7E-6	0.000510
^{134}I	2.9E-10	4E-4	0.0000007
^{134}Cs	1.6E-9	9E-7	0.00175
^{135}I	1.7E-9	3E-5	0.0000580
^{136}Cs	9.9E-10	6E-6	0.000165
^{137}Cs	3.6E-9	1E-6	0.0036
^{137m}Ba	3.4E-9	--	--
^{138}Cs	1.5E-9	4E-4	0.0000037
^{139}Ba	1E-10	2E-4	0.0000005
^{140}Ba	1E-10	8E-6	0.0000131
^{140}La	2.3E-11	9E-6	0.00000256
^{141}La	3.6E-11	5E-5	0.00000071
^{141}Ce	8E-12	3E-5	0.000000280
^{142}La	7.6E-11	1E-4	0.00000076
^{143}Ce	6E-12	2E-5	0.0000003
^{143}Pr	1E-11	2E-5	0.0000005
All others	1.5E-11	1E-8	0.0015
		Total	0.009020094

Table 11.2-7

Tank Design Features

Component	High Level Alarm	Overflows and Drains
Floor drain collector tank	Yes (RCR)	Floor drain sump, W-2
Waste sludge phase separator	Yes (RCR)	Floor drain sump, W-2
Floor drain sample tank	Yes (RCR)	Floor drain sump, W-2
Waste collector tank	Yes (RCR)	Floor drain sump, W-2
Spent resin tank	Yes (RCR)	Floor drain sump, W-2
Waste surge tank	Yes (RCR)	Equipment drain sump, W-3
Waste sample tanks	Yes (RCR)	Equipment drain sump, W-3
Detergent drain tanks[b]	No[a]	Chemical waste sump, W-4
Chemical waste tanks	Yes (RCR)	Chemical waste sump, W-4
Distillate tanks[b]	No[a]	Chemical waste sump, W-4
Nonoperational decontamination solution concentrator waste tanks[b]	No	Chemical waste sump, W-4
Condensate backwash receiving tank	Yes (RCR)	Equipment drain sump, W-3
Condensate phase separators	Yes (RCR)	Equipment drain sump, W-3
Decontamination solution concentrator waste measuring tank[c]	No[a]	Decontamination solution concentrator waste tanks
RWCU phase separators	Yes (RCR)	Equipment drain sump, W-3
Condensate storage tanks	Yes (MCR)	Floor drain sump, T4

[a] Alarms not installed.
[b] Nonoperational.
[c] Not used.

LEGEND
RCR - radwaste control room
MCR - main control room

Table 11.2-8

Equipment Drain Subsystem Sources

Source	Startup Flows (gpd)	Regular Daily Flows (gpd)	Irregular Flows (gpd)	Maximum Daily Flows (gpd)
Equipment drains				
Drywell	3,860	3,860		28,800
Reactor building	3,755	3,755		14,400
Turbine building	5,726	5,726		5,726
Radwaste building	1,000	1,000		1,000
Reactor hydrotest and water level reduction to operating state	56,720	0		0
RHR system flush water			4,000[a]	0
Condensate demineralizer backwash	27,000		13,500[b]	40,500[c]
Cleanup demineralizer backwash	2,430		1,215[d]	
Water inleakage to condenser	0	0		14,400
Total	100,491	14,341		104,826

[a] Occurs every shutdown prior to placing the RHR system in operation for shutdown cooling.

[b] Under normal operating conditions, one condensate filter demineralizer would be precoated every 4 days.

[c] The maximum daily flow is based on a main condenser inleakage of 10 gpm, which corresponds to 3 condensate demineralizer precoatings daily and maximum leak and drain inflows. Up to 36 gpm of condenser inleakage can be accommodated. This requires precoating of one condensate demineralizer every 3 hr. This inleakage rate would result in overloading the equipment drain subsystem but could be tolerated for short periods of time during location and repair of the leak.

[d] Under normal operating conditions, each cleanup demineralizer may be precoated every 6.8 days.

Table 11.2-9

Floor Drain Subsystem Sources

Source	Regular Daily Flows (gpd)	Irregular Flows (gpd)	Maximum Daily Flows (gpd)
Floor drains			
Drywell	700		28,800
Reactor building	2,000		15,000
Radwaste building	1,000		1,000
Turbine building	2,000		2,000
Waste sludge phase separator decant	0	8,489[a]	8,489
Total	5,700	8,489	55,289

[a] Under normal operating conditions, the waste sludge phase separator tank is decanted every 3-4 days.

Table 11.2-10

Chemical Waste Subsystem Sources

Source	Regular Daily Flow (gpd)	Irregular Flow (gpd)	Maximum Daily Flow (gpd)
Detergents drains/shop decontamination solutions	1,000		2,000
Laboratory drains	500		500
Decontamination drains reactor and turbine buildings		1,000	1,000
From floor drain or equipment drain subsystem		15,000	15,000
Filter demineralizer chemical cleaning solutions		Infrequent 2,000	2,000
Battery room drains		Infrequent 100	100
Total	1,500		20,600

Table 11.2-11

Radwaste System Process Flow Diagram Data

	Equipment Drain Subsystem						
Flow path	1	2	3	4	5	6	8
Batches/day (normal)	8.5	4.1	1.1	6.3	1.0/6.8	4.0/7.4	1.0/30.0
Batches/day (maximum)	63.4	15.8	1.1	6.3	1.0	4.0/2.0	-
Volume/batch (gal)	455	909	909	909	2430	13,500	4000
Normal daily volume (gal)	3860	3755	1000	5726	-	-	-
Normal activity ($\mu Ci/cm^3$)	5.16E-2	1.30E-2	7.18E-5	1.91E-5	1.59E-2	7.18E-6	9.22E-7
Maximum daily volume (gal)	28,800	14,400	1000	5726	2430	27,000	4000
Maximum activity ($\mu Ci/cm^3$)	1.72E0	4.32E-1	2.39E-3	1.26E-2	5.32E-1	3.59E-4	3.08E-5
Flow rate (gal/minute)	50	50	50	50	53	450	Batch
Daily activity (μCi/day)							
Normal	7.19E5	1.76E5	2.59E2	3.94E2	-	-	-
Maximum	2.51E7	6.14E6	9.05E3	2.73E3	4.89E6	3.67E4	4.66E2

Table 11.2-11

Radwaste System Process Flow Diagram Data (Continued)

	Equipment Drain Subsystem (Continued)						
Flow path	9	33	12	14	17	18	19
Batches/day (normal)	1.0	1.0	1.0	1.0	1.5	2.2	1.1
Batches/day (maximum)	7.0	7.0	7.0	7.0	63.4	16.5	1.1
Volume/batch (gal)	15,000	15,000	15,000	15,000	455	909	909
Normal daily volume (gal)	15,000	15,000	15,000	15,000	700	2000	1000
Normal activity ($\mu Ci/cm^3$)	1.16E-2	5.81E-3	1.16E-4	1.16E-4	7.18E-6	1.05E-6	1.44E-5
Maximum daily volume (gal)	104,826	104,826	104,826	104,826	28,800	15,000	1000
Maximum activity ($\mu Ci/cm^3$)	3.59E-1	3.53E-1	3.53E-3	3.53E-3	6.84E-2	1.00E-3	4.78E-4
Flow rate (gal/minute)	190	190	190	190	50	100	50
Daily activity (μCi/day)							
Normal	6.30E5	3.14E5	6.30E3	6.30E3	1.81E1	7.57E0	5.18E1
Maximum	2.04E7	2.00E7	2.03E5	2.04E5	1.81E5	7.57E3	1.81E3

Table 11.2-11

Radwaste System Process Flow Diagram Data (Continued)

	Equipment Drain Subsystem (Continued)					
Flow path	20	117	21	23	107	108
Batches/day (normal)	2.2	10./3.4	1.0/2.6	1.0/2.6	1.0/2.6	1.0/2.6
Batches/day (maximum)	2.2	1.0	3.7	3.74	3.7	3.7
Volume/batch (gal)	909	8489	15,000	15,000	15,000	15,000
Normal daily volume (gal)	2000		5700	5700	5700	5700
Normal activity ($\mu Ci/cm^3$)	7.18E-7	7.18E-6	1.00E-6	4.99E-5	1.00E-6	1.00E-6
Maximum daily volume (gal)	2000	8489	55,489	55,489	55,489	55,489
Maximum activity ($\mu Ci/cm^3$)	2.39E-5	3.59E-4	1.08E-2	1.08E-2	1.08E-4	1.08E-4
Flow rate (gal/minute)	50	50	190	190	190	190
Daily activity (μCi/day)						
Normal	5.18E0	-	2.56E3	1.03E3	2.06E1	2.06E1
Maximum	1.81E2	-	2.33E5	2.33E5	2.33E3	2.33E3

Table 11.2-11

Radwaste System Process Flow Diagram Data (Continued)

	Waste Surge Subsystem	
Flow path	104	37
Batches/day (normal)	1.0/yr	1.0/yr
Batches/day (maximum)	1.0	1.0
Volume/batch (gal)	56,720	56,720
Normal daily volume (gal)		
Normal activity ($\mu Ci/cm^3$)	7.18E-6	7.18E-6
Maximum daily volume (gal)	56,720	56,720
Maximum activity ($\mu Ci/cm^3$)	3.59E-4	3.59E-4
Flow rate (gal/minute)	Batch	190

Table 11.2-11

Radwaste System Process Flow Diagram Data (Continued)

	Chemical Waste Subsystem				
Flow path	27	109	120	121	122
Batches/day (normal)	1.0				
Batches/day (maximum)	2.0	2.0	2.0	1.0	3.7
Volume/batch solids(lb)			581	1162	314
liquids (gal)	1000	12,153	12,153	615	168
Normal daily volume (gal)	1000				
Normal activity solids (μCi/batch)					
liquids (μCi/cm^3)	1.05E-5	2.76E-3	2.71E-3	1.07E-1	1.07E-1
Maximum daily volume (gal)	2000	24,306	24,306		
Maximum activity solids (μCi/batch)					
liquids (μCi/cm^3)	1.05E-5	-	2.71E-3	1.07E-1	1.07E-1
Flow rate (gal/minute)	25	190	10	31	20

Table 11.2-11

Radwaste System Process Flow Diagram Data (Continued)

	Waste Sludge Subsystem (Condensate Backwash)			
Flow path	56	58	60	6
Batches/day (normal)	4.0/7.4	4.0/7.4	1/18.5	4/7.4
Batches/day (maximum)	4.0	4.0	1	4.0/2.0
Volume/batch solids (lb)	330	330	3300	-
liquids (gal)	13,500	13,500	7527	13,500
Normal daily volume (gal)	7300	7300	-	-
Normal activity solids (μCi/batch)	2.20E6	2.20E6	1.26E7	-
liquids (μCi/cm^3)	7.18E-6	7.18E-6	7.18E-6	7.18E-6
Maximum daily volume (gal)	54,000	54,000	7527	27,000
Maximum activity solids (μCi/batch)	5.26E7	5.26E7	2.67E7	-
liquids (μCi/cm^3)	3.59E-4	3.59E-4	3.59E-4	3.59E-4
Flow rate (gal/minute)	2500	450	20	450

Table 11.2-11

Radwaste System Process Flow Diagram Data (Continued)

	Waste Sludge Subsystem (Cleanup Backwash)		
Flow path	54	59	5
Batches/day (normal)	2.0/6.8	1.0/60	1.0/6.8
Batches/day (maximum)	2.0	1.0/60	1.0
Volume/batch solids (lb)	29.7	524	-
liquids (gal)	1215	1196	2430
Normal daily volume (gal)	360	-	-
Normal activity solids(μCi/batch)	2.55E7	1.19E8	-
liquids (μCi/cm^3)	1.59E-2	1.59E-2	1.59E-2
Maximum daily volume (gal)	2430	1196	2430
Maximum activity solids (μCi/batch)	7.68E8	1.80E8	-
liquids (μCi/cm^3)	5.32E-1	5.32E-1	5.32E-1
Flow rate (gal/minute)	270	20	53

Table 11.2-11

Radwaste System Process Flow Diagram Data (Continued)

	Waste Sludge Subsystem (Spent Resin)			
Flow path	64	119	69	71
Batches/day (normal)	1.0/66	1.0/67	1.0/165	-
Batches/day (maximum)	1.0/29	1.0/49	1.0/100	-
Volume/batch solids (lb)	1539	1539	1539	1539
liquids (gal)	746	746	746	3510
Normal activity solids (μCi/batch)	2.39E6	6.15E3	1.16E2	-
liquids (μCi/cm^3)	7.18E-6	7.18E-6	7.18E-6	7.18E-6
Maximum activity solids (μCi/batch)	2.74E7	2.34E5	1.26E2	-
liquids (μCi/cm^3)	3.59E-4	3.59E-4	3.59E-4	3.59E-4
Flow rate (gal/minute)	37	37	37	20

Table 11.2-11

Radwaste System Process Flow Diagram Data (Continued)

	Equipment Drain Subsystem				
Flow path	61	63	62	-	65
Batches/day (normal)	1.0	1.0/3.4	1.0/5.2	-	1.0/3.4
Batches/day (maximum)	2.9	1.1/1.0	1.0/5.2	-	1.0
Volume/batch solids (lb)	41.36	41.36	59.4	-	220
liquids (gal)	1692	1692	2430	-	501
Normal daily volume (gal)	1692	-	-	-	-
Normal activity solids (μCi/batch)	3.30E4	8.42E1	1.47E4	-	4.87E4
liquids (μCi/cm^3)	7.18E-6	7.18E-6	7.18E-6	-	7.18E-6
Maximum daily volume (gal)	4906	1861	-	-	501
Maximum activity solids (μCi/batch)	3.30E4	8.42E1	1.47E6	-	7.33E5
liquids (μCi/cm^3)	3.59E-4	3.59E-4	3.59E-4	-	9.88E-4
Flow rate (gal/minute)	376	376	540	-	20

Table 11.2-11

Radwaste System Process Flow Diagram Data (Continued)

NOTES:

Process Diagram, Figure 11.2-1, forms part of this data.

The following definitions are used for this data:

Normal volume - Expected flow during steady state normal operation

Maximum volume - Maximum expected flow during unsteady state operation such as startup, shutdown, etc.

Normal activity - Activity level expected during operation with no fuel leaks and corrosion product reactor water activity concentration of 0.1 $\mu Ci/cm^3$

Maximum activity - Activity level expected during operation with fuel leak rate equivalent to reactor water activity concentration of 2.3 $\mu Ci/cm^3$ and design basis noble radiogas release rate of 100,000 $\mu Ci/sec$ (corrosion and fission products present)

Maximum volume and maximum activity are not concurrent.

For activity values: E-1 = number x 10^{-1}; E1 = number x 10^{1}
E-4 = number x 10^{-4}; E4 = number x 10^{4}

Fractional values on tables denote the number of items per occurrence divided by the number of days between each occurrence (i.e., 1/30 batches/day means one batch processed every 30 days).

Waste system input activities are based on a reactor water-to-steam partition coefficient of 1.0E-3.

Values for design purposes only. Actual flows and activities may differ.

Table 11.2-12

Radwaste Process Equipment Design Basis

Equipment	Radioactivity Decontamination Factor	
Deep bed demineralizers	Soluble	100
	Insoluble	50
Precoat filters	Soluble	1
	Insoluble	2
Evaporators (influent/distillate)[a]	1000	

[a] Concentration factor (influent/bottoms) = 0.6/32.

Table 11.2-13

Liquid Radwaste Equipment

	Material of Construction	Quantity	Size or Capacity	Remarks
EQUIPMENT DRAIN SUBSYSTEM				
Waste collector tank	Carbon steel	1	20,000 gal	Note 11
Waste collector pump	Stainless steel	1	190 gal/minute @ 155 ft TDH	
Waste sample tanks	Carbon steel	2	20,000 gal	Note 11
Waste sample pumps	Stainless steel	2	190 gal/minute @ 100 ft TDH	
Waste collector filter	Carbon steel	1	188 ft^2 of filter area	Notes 3, 4
Waste filter hold pump	Stainless steel	1	75 gal/minute @ 50 ft TDH	Note 3
Waste demineralizer	Carbon steel	1	65 ft^3 resin bed	Note 2
Waste surge tank	Carbon steel	1	75,000 gal	Note 11
Waste surge pump	Stainless steel	1	190 gal/minute @ 155 ft TDH	
FLOOR DRAIN SUBSYSTEM				
Floor drain collector tank	Carbon steel	1	20,000 gal	Note 11
Floor drain collector pump	Stainless steel	1	190 gal/minute @ 155 ft TDH	
Floor drain sample tank	Carbon steel	1	20,000 gal	Note 11
Floor drain sample pump	Stainless steel	1	190 gal/minute @ 100 ft TDH	
Floor drain filter	Carbon steel	1	188 ft^2 of filter area	Notes 3, 4
Floor drain filter hold pump	Stainless steel	1	75 gal/minute @ 50 ft TDH	Note 3
Floor drain demineralizer	Carbon steel	1	65 ft^3 resin bed	Note 2

Table 11.2-13

Liquid Radwaste Equipment (Continued)

	Material of Construction	Quantity	Size or Capacity	Remarks
CHEMICAL WASTE SUBSYSTEM				
Detergent drain tank	Carbon steel	2	1600 gal	Note 12
Detergent drain pumps	Stainless steel	2	27 gal/minute @ 90 ft TDH	
Detergent drain filter	Carbon steel	1	50 gal/minute	
Chemical waste tanks	Stainless steel	2	15,000 gal	Note 12
Chemical waste pumps	Stainless steel	2	285 gal/minute @ 200 ft TDH	
Concentrator feed pumps	Stainless steel	2	30 gal/minute @ 95 ft TDH	
Concentrator (evaporator)	Stainless steel	2	10 gal/minute	Note 6
Heating element	Stainless steel/carbon steel	2		Note 10
Concentrator recycle pump	Stainless steel	2	2300 gal/minute @ 40 ft TDH	Note 5
Concentrator condenser	Stainless steel/carbon steel	2		Note 7
Distillate tanks	Stainless steel	2	15,000 gal	Note 12
Distillate pumps	Stainless steel	2	142 gal/minute @ 230 ft TDH	
Polishing demineralizer	Carbon steel	1	65 ft^3 resin bed	Note 2
AUXILIARY EQUIPMENT				
Waste precoat tank	Carbon steel	1	210 gal	Notes 4, 8
Waste precoat pump	Ductile iron	1	325 gal/minute @ 50 ft TDH	Note 3
Waste filter aid tank	Carbon steel	1	630 gal	Notes 4, 8
Waste filter aid metering pump	Stainless steel	2	0 to 154 gal/hr @ 145 psi	
Resin addition tank	Stainless steel	1	1200 gal	Note 12
Chemical addition tanks	Carbon steel	2	200 gal	Note 9
Chemical addition pumps	Carpenter 20 steel	2	79 gal/hr	

Table 11.2-13

Liquid Radwaste Equipment (Continued)

NOTES:

1.	Unless otherwise noted, the design pressure of the equipment is 150 psig, design temperature is 150°F.
2.	Vessel is rubber lined, internals are stainless steel.
3.	Design temperature is 220°F.
4.	Vessel is lined with phenolic/epoxy cross linked, alkaline polymerized coating, internals are stainless steel.
5.	Design temperature is 300°F.
6.	Design pressure is 30 psig, design temperature is 274°F.
7.	Design flow is: coolant inlet-750 gpm @ 105°F, outlet -120°F; design pressure: shell side - 30 psig, tube side - 150 psig; design temperature - 274°F.
8.	Design pressure is atmospheric.
9.	Vessel is lined with acid-resistant high-bake phenolic coating.
10.	Design flows: shell side - 6300 lb/hr @ 274°F, tube side - 2300 gpm @ 218°F; design pressures: shell side - 60 psig, tube side - 75 psig; design temperature - 307°F.
11.	Tank design pressure is atmospheric plus static head pressure, design temperature is 140°F.
12.	Tank design pressure is atmospheric plus static head pressure, design temperature is 150°F.

Table 11.2-14

Annual Releases of Radioactive Material as Liquid

Nuclide	Half-Life (days)	Concentration in Primary Coolant (μCi/ml)	High Purity (Ci)	Low Purity (Ci)	Total Laws (Ci)	Adjusted Total (Ci/yr)[a]	Total (Ci/yr)
CORROSION AND ACTIVATION PRODUCTS							
^{24}Na	6.25E-1	8.79E-3	0.00036	0.00043	0.00079	0.00688	0.00692
^{32}P	1.43E1	2.06E-4	0.00001	0.00002	0.00003	0.00027	0.00027
^{51}Cr	2.78E1	5.14E-3	0.00027	0.00052	0.00081	0.00704	0.00703
^{54}Mn	3.03E2	6.18E-5	0.00000	0.00001	0.00001	0.00008	0.00008
^{56}Mn	1.07E-1	4.28E-2	0.00052	0.00034	0.00085	0.00747	0.00745
^{55}Fe	9.50E2	1.03E-3	0.00005	0.00010	0.00017	0.00143	0.00147
^{59}Fe	4.50E1	3.08E-5	0.00000	0.00000	0.00000	0.00004	0.00004
^{58}Co	7.13E1	2.06E-4	0.00001	0.00002	0.00003	0.00028	0.00028
^{60}Co	1.92E2	4.12E-0	0.00002	0.00004	0.00006	0.00058	0.00058
^{65}Ni	1.07E-1	2.57E-4	0.00000	0.00000	0.00000	0.00004	0.00004
^{64}Cu	5.33E-1	2.91E-2	0.00111	0.00128	0.00239	0.02098	0.02098
^{65}Zn	2.45E2	2.06E-4	0.00001	0.00002	0.00003	0.00028	0.00028
^{69m}Zn	5.57E-1	1.94E-3	0.00007	0.00009	0.00017	0.00146	0.00147
^{69}Zn	3.96E-2	0.0	0.00008	0.00009	0.00018	0.00153	0.00157
^{187}W	9.96E-1	2.98E-4	0.00001	0.00002	0.00003	0.00028	0.00028
^{239}Np	2.35E0	7.10E-3	0.00036	0.00060	0.00094	0.00831	0.00790
FISSION PRODUCTS							
^{83}Br	1.00E-1	2.42E-3	0.00003	0.00002	0.00004	0.00039	0.00039
^{84}Br	2.21E-2	3.67E-3	0.00000	0.00000	0.00000	0.00003	0.00003
^{89}Rb	1.07E-2	3.60E-3	0.00001	0.00002	0.00002	0.00022	0.00022
^{89}Sr	5.20E1	1.03E-5	0.00001	0.00001	0.00002	0.00015	0.00015
^{91}Sr	4.03E-1	3.82E-3	0.00013	0.00014	0.00026	0.00233	0.00231

Table 11.2-14

Annual Releases of Radioactive Material as Liquid (Continued)

Nuclide	Half-Life (days)	Concentration in Primary Coolant (μCi/ml)	High Purity (Ci)	Low Purity (Ci)	Total Laws (Ci)	Adjusted Total (Ci/yr)[a]	Total (Ci/yr)
^{91m}Y	3.47E-2	0.0	0.00008	0.00008	0.00017	0.00146	0.00147
^{91}Y	5.88E1	4.12E-5	0.00000	0.00001	0.00001	0.00007	0.00007
^{92}Sr	1.13E-1	8.60E-3	0.00012	0.00007	0.00018	0.00159	0.00157
^{92}Y	1.47E-1	5.29E-3	0.00021	0.00016	0.00038	0.00328	0.00325
^{93}Y	4.25E-1	3.83E-3	0.00014	0.00014	0.00027	0.00241	0.00241
^{98}Nb	3.54E-2	3.11E-3	0.00001	0.00000	0.00001	0.00008	0.00008
^{99}Mo	2.798E0	2.04E-3	0.00010	0.00018	0.00028	0.00244	0.00241
^{99m}Tc	2.5E-1	1.85E-2	0.00054	0.00054	0.00107	0.00893	0.00937
^{101}Tc	9.72E-3	6.56E-2	0.00000	0.00000	0.00000	0.00002	0.00002
^{103}Ru	3.96E1	2.06E-5	0.00000	0.00000	0.00000	0.00003	0.00003
^{103m}Rh	3.96E-2	0.0	0.00000	0.00000	0.00000	0.00003	0.00003
^{104}Tc	1.25E-2	5.87E-2	0.00000	0.00000	0.00001	0.00006	0.00006
^{105}Ru	1.85E-1	1.80E-3	0.00004	0.00003	0.00006	0.00055	0.00058
^{105m}Rh	5.21E-4	0.0	0.00004	0.00003	0.00006	0.00056	0.00059
^{105}Rh	1.50E0	0.0	0.00001	0.00001	0.00002	0.00018	0.00019
^{129m}Te	3.40E1	4.11E-5	0.00000	0.00000	0.00001	0.00005	0.00005
^{129}Te	4.79E-2	0.0	0.00000	0.00000	0.00000	0.00003	0.00003
^{131m}Te	1.25E0	1.00E-4	0.00000	0.00001	0.00001	0.00010	0.00010
^{131}Te	1.74E-2	0.0	0.00000	0.00000	0.00000	0.00002	0.00002
^{131}I	8.05E0	5.11E-3	0.00027	0.00049	0.00077	0.00643	0.00671
^{132}Te	3.25E0	1.02E-5	0.00000	0.00000	0.00000	0.00001	0.00001
^{132}I	9.58E-2	2.41E-2	0.00026	0.00016	0.00041	0.00345	0.00367
^{133}I	8.75E-1	1.93E-2	0.00084	0.00115	0.00199	0.01667	0.01783
^{134}I	3.67E-2	5.26E-2	0.00010	0.00006	0.00017	0.00144	0.00147

Table 11.2-14

Annual Releases of Radioactive Material as Liquid (Continued)

Nuclide	Half-Life (days)	Concentration in Primary Coolant (μCi/ml)	High Purity (Ci)	Low Purity (Ci)	Total Laws (Ci)	Adjusted Total (Ci/yr)[a]	Total (Ci/yr)
^{134}Cs	7.49E2	3.09E-5	0.00008	0.00081	0.00089	0.00741	0.00776
^{135}I	2.79E-1	1.77E-2	0.00050	0.00044	0.00094	0.00788	0.00829
^{136}Cs	1.30E1	2.05E-5	0.00005	0.00051	0.00057	0.00473	0.00493
^{137}Cs	1.10E4	7.21E-5	0.00020	0.00188	0.00206	0.01730	0.01783
^{137M} Ba	1.77E-3	0.0	0.00018	0.00175	0.00193	0.01618	0.01678
^{138}Cs	2.24E-2	7.34E-3	0.00022	0.00065	0.00087	0.00724	0.00755
^{139}Ba	5.76E-2	8.09E-3	0.00004	0.00002	0.00006	0.00053	0.00056
^{140}Ba	1.28E1	4.11E-4	0.00002	0.00004	0.00006	0.00053	0.00056
^{140}La	1.67E0	0.0	0.00000	0.00001	0.00001	0.00011	0.00011
^{141}La	1.62E-1	0.0	0.00001	0.00001	0.00002	0.00017	0.00018
^{141}Ce	3.24E1	3.08E-5	0.00000	0.00000	0.00000	0.00004	0.00004
^{142}La	6.39E-2	4.08E-3	0.00003	0.00002	0.00004	0.00036	0.00038
^{143}Ce	1.38E0	3.01E-5	0.00000	0.00000	0.00000	0.00003	0.00003
^{143}Pr	1.37E1	4.11E-5	0.00000	0.00000	0.00001	0.00005	0.00005
All others	1.32E-2	1.38E-2	0.00000	0.00001	0.00007	0.00007	
Total (except tritium)		4.31E-01	0.00719	0.01307	0.02026	0.17962	0.17834
Total release						13.0	13.0

[a] Adjusted total includes an additional 0.15 ci/yr with the same isotopic distribution as the calculated source term to account for anticipated occurrences such as operator errors resulting in unplanned releases.

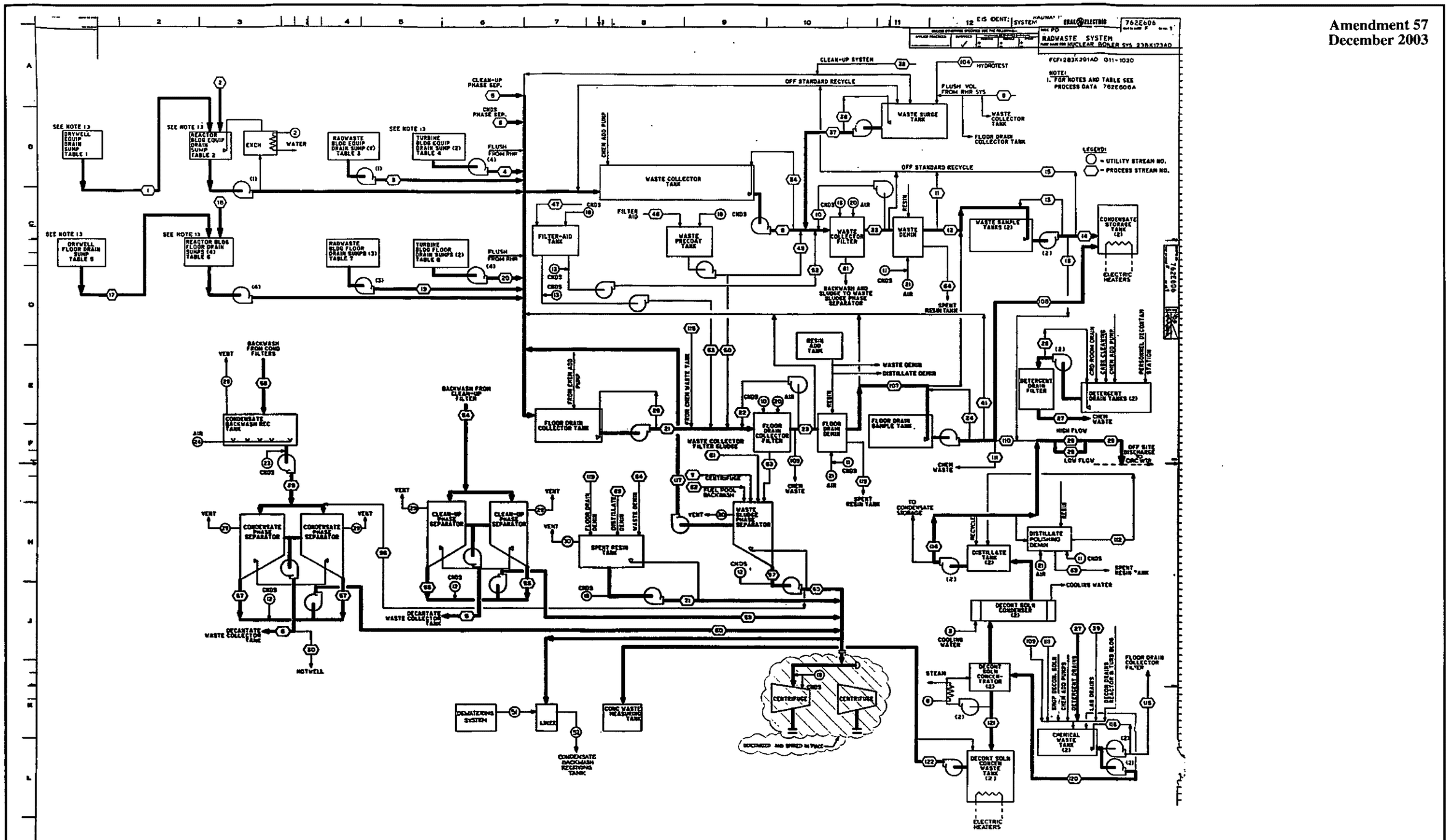

Columbia Generating Station Final Safety Analysis Report	Radwaste System Process Diagram		
	Draw. No. 2G11-04,6	Rev. 8	Figure 11.2-1

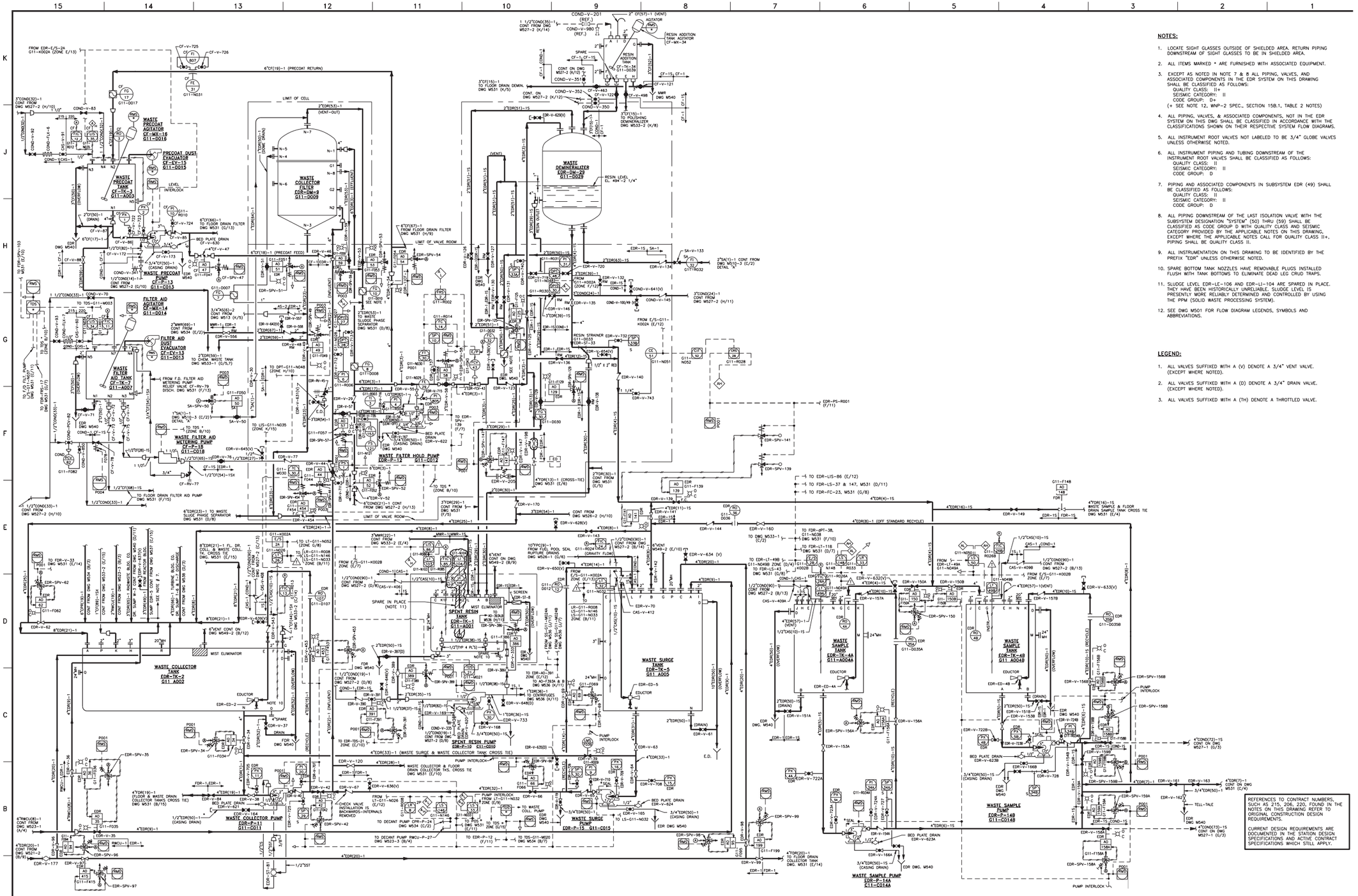
WASTE PRECOAT AGITATOR CF-MK-16 G11-D016
PRECOAT DUST EVACUATOR CF-EV-15 G11-D015
WASTE PRECOAT TANK CF-TK-3 G11-A003
WASTE COLLECTOR FILTER EDR-DM-9 G11-D009
WASTE DEMINERALIZER EDR-DM-29 G11-D029
FILTER AID AGITATOR CF-MK-14 G11-D014
FILTER AID DUST EVACUATOR CF-EV-13 G11-D013
WASTE FILTER AID TANK CF-TK-7 G11-A007
WASTE FILTER AID METERING PUMP CF-P-15 G11-D018
WASTE FILTER HOLD PUMP EDR-P-13 G11-D012
WASTE COLLECTOR TANK EDR-TK-2 G11 A002
SPENT RESIN TANK EDR-TK-1 G11-A001
WASTE SURGE TANK EDR-TK-5 G11 A005
SPENT RESIN PUMP EDR-P-10 G11-D010
WASTE SURGE PUMP EDR-P-15 G11-D015
WASTE COLLECTOR PUMP EDR-P-11 G11-D011
WASTE SAMPLE TANK EDR-TK-4B G11 A004B
WASTE SAMPLE TANK EDR-TK-4A G11-A004A
WASTE SAMPLE PUMP EDR-P-14B G11-D014B
WASTE SAMPLE PUMP EDR-P-14A G11-D014A
LIMIT OF CELL
LIMIT OF VALVE ROOM
MIST ELIMINATOR
BED PLATE DRAIN
FLOOR & WASTE DRAIN COLLECTOR TANKS CROSS TIE DWG M531 (B/15)
TO FDR-LIS-86 (E/12)
TO FDR-LS-37 & 147, M531 (D/11)
TO FDR-FC-23, M531 (G/8)
4"EDR(8)-1 (OFF STANDARD RECYCLE)
4"EDR(16)-15
WASTE SAMPLE & FLOOR DRAIN SAMPLE TANK CROSS TIE DWG M531 (E/4)
TO FDR-dPT-38, G11-N038 DWG M531 (F/10)
TO FDR-LT-118 DWG M531 (D/7)
TO FDR-LT-49B & G11-N049B ZONE (D/4) TO FDR-LS-43 DWG M531 (D/8)
FROM LT-49A G11-N049A
FROM E/S-G11-K002B ZONE (E/7)
FROM E/S-G11-K002A ZONE (E/13)
FROM E/S-G11-K002C ZONE (E/7)
TO DWG M533-1 (C/2)
TO DWG M533-2 (E/4)
TO DWG M533-3 (B/3)
TO DWG M533-4 (B/2)
TO DWG M533-5 (B/2)
TO DWG M533-6 (C/2)
TO DWG M533-7 (C/2)
TO DWG M533-8 (C/2)
TO DWG M533-9 (C/2)
TO DWG M533-10 (C/2)
TO DWG M533-11 (C/2)
TO DWG M533-12 (C/2)
TO DWG M533-13 (C/2)
TO DWG M533-14 (C/2)
TO DWG M533-15 (C/2)
TO DWG

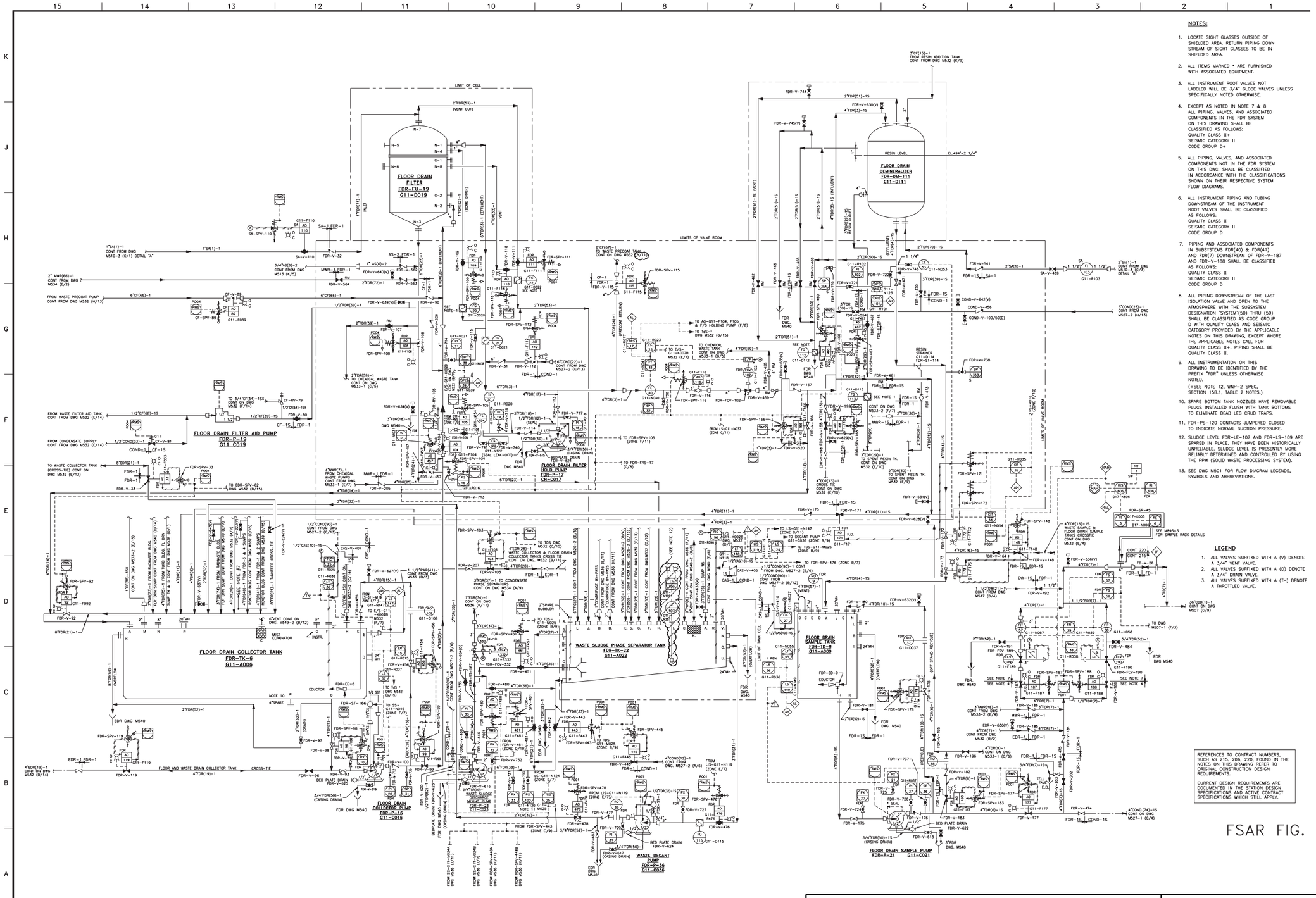

NOTES:

1. LOCATE SIGHT GLASSES OUTSIDE OF SHIELDED AREA. RETURN PIPING DOWN STREAM OF SIGHT GLASSES TO BE IN SHIELDED AREA.
2. ALL ITEMS MARKED * ARE FURNISHED WITH ASSOCIATED EQUIPMENT.
3. ALL INSTRUMENT ROOT VALVES NOT LABELED WILL BE 3/4" GLOBE VALVES UNLESS SPECIFICALLY NOTED OTHERWISE.
4. EXCEPT AS NOTED IN NOTE 7 & 8 ALL PIPING, VALVES, AND ASSOCIATED COMPONENTS IN THE FDR SYSTEM ON THIS DRAWING SHALL BE CLASSIFIED AS FOLLOWS: QUALITY CLASS II+ SEISMIC CATEGORY II CODE GROUP D+
5. ALL PIPING, VALVES, AND ASSOCIATED COMPONENTS NOT IN THE FDR SYSTEM ON THIS DWG. SHALL BE CLASSIFIED IN ACCORDANCE WITH THE CLASSIFICATIONS SHOWN ON THEIR RESPECTIVE SYSTEM FLOW DIAGRAMS.
6. ALL INSTRUMENT PIPING AND TUBING DOWNSTREAM OF THE INSTRUMENT ROOT VALVES SHALL BE CLASSIFIED AS FOLLOWS: QUALITY CLASS II SEISMIC CATEGORY II CODE GROUP D
7. PIPING AND ASSOCIATED COMPONENTS IN SUBSYSTEMS FDR(40) & FDR(41) AND FDR(7) DOWNSTREAM OF FDR-V-187 AND FDR-V-188 SHALL BE CLASSIFIED AS FOLLOWS: QUALITY CLASS II SEISMIC CATEGORY II CODE GROUP D
8. ALL PIPING DOWNSTREAM OF THE LAST ISOLATION VALVE AND OPEN TO THE ATMOSPHERE WITH THE SUBSYSTEM DESIGNATION "SYSTEM"(50) THRU (59) SHALL BE CLASSIFIED AS CODE GROUP D WITH QUALITY CLASS AND SEISMIC CATEGORY PROVIDED BY THE APPLICABLE NOTES ON THIS DRAWING, EXCEPT WHERE THE APPLICABLE NOTES CALL FOR QUALITY CLASS II+, PIPING SHALL BE QUALITY CLASS II.
9. ALL INSTRUMENTATION ON THIS DRAWING TO BE IDENTIFIED BY THE PREFIX "FDR" UNLESS OTHERWISE NOTED. (+SEE NOTE 12, WNP-2 SPEC, SECTION 15B.1, TABLE 2 NOTES.)
10. SPARE BOTTOM TANK NOZZLES HAVE REMOVABLE PLUGS INSTALLED FLUSH WITH TANK BOTTOMS TO ELIMINATE DEAD LEG CRUD TRAPS.
11. FDR-PS-120 CONTACTS JUMPERED CLOSED TO INDICATE NORMAL SUCTION PRESSURE.
12. SLUDGE LEVEL FDR-LE-107 AND FDR-LS-109 ARE SPARED IN PLACE. THEY HAVE BEEN HISTORICALLY UNRELIABLE. SLUDGE LEVEL IS PRESENTLY MORE RELIABLY DETERMINED AND CONTROLLED BY USING THE PPM (SOLID WASTE PROCESSING SYSTEM).
13. SEE DWG M501 FOR FLOW DIAGRAM LEGENDS, SYMBOLS AND ABBREVIATIONS.

LEGEND

1. ALL VALVES SUFFIXED WITH A (V) DENOTE A 3/4" VENT VALVE.
2. ALL VALVES SUFFIXED WITH A (D) DENOTE A 3/4" DRAIN VALVE.
3. ALL VALVES SUFFIXED WITH A (TH) DENOTE A THROTTLED VALVE.

REFERENCES TO CONTRACT NUMBERS, SUCH AS 215, 206, 220, FOUND IN THE NOTES ON THIS DRAWING REFER TO ORIGINAL CONSTRUCTION DESIGN REQUIREMENTS.

CURRENT DESIGN REQUIREMENTS ARE DOCUMENTED IN THE STATION DESIGN SPECIFICATIONS AND ACTIVE CONTRACT SPECIFICATIONS WHICH STILL APPLY.

Columbia Generating Station
Final Safety Analysis Report

Flow Diagram Radioactive Waste System
Floor Drain Processing

Draw. No. M531	Rev. 80	Figure 11.2-3

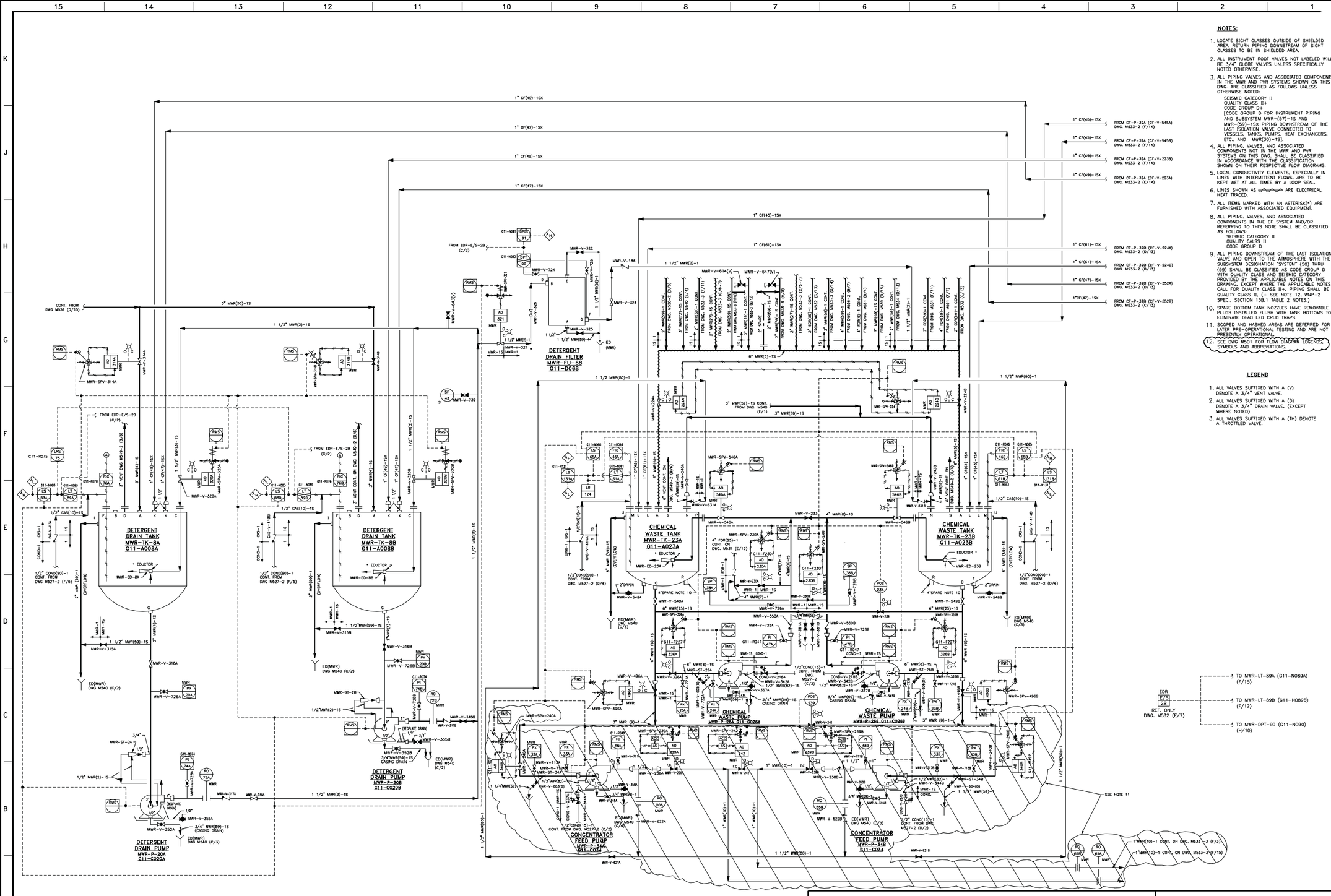

NOTES:

1. LOCATE SIGHT GLASSES OUTSIDE OF SHIELDED AREA. RETURN PIPING DOWNSTREAM OF SIGHT GLASSES TO BE IN SHIELDED AREA.
2. ALL INSTRUMENT ROOT VALVES NOT LABELED WILL BE 3/4" GLOBE VALVES UNLESS SPECIFITALLY NOTED OTHERWISE.
3. ALL PIPING VALVES AND ASSOCIATED COMPONENTS IN THE MWR AND PVR SYSTEMS SHOWN ON THIS DWG. ARE CLASSIFIED AS FOLLOWS UNLESS OTHERWISE NOTED:
   SEISMIC CATEGORY II
   QUALITY CLASS II+
   CODE GROUP D+
   [CODE GROUP D FOR INSTRUMENT PIPING AND SUBSYSTEM MWR-(57)-1S AND MWR-(59)-1SX PIPING DOWNSTREAM OF THE LAST ISOLATION VALVE CONNECTED TO VESSELS, TANKS, PUMPS, HEAT EXCHANGERS, ETC., AND MWR(30)-1S].
4. ALL PIPING, VALVES, AND ASSOCIATED COMPONENTS NOT IN THE MWR AND PVR SYSTEMS ON THIS DWG. SHALL BE CLASSIFIED IN ACCORDANCE WITH THE CLASSIFICATION SHOWN ON THEIR RESPECTIVE FLOW DIAGRAMS.
5. LOCAL CONDUCTIVITY ELEMENTS, ESPECIALLY IN LINES WITH INTERMITTENT FLOWS, ARE TO BE KEPT WET AT ALL TIMES BY A LOOP SEAL.
6. LINES SHOWN AS ~~~~ ARE ELECTRICAL HEAT TRACED.
7. ALL ITEMS MARKED WITH AN ASTERISK(*) ARE FURNISHED WITH ASSOCIATED EQUIPMENT.
8. ALL PIPING, VALVES, AND ASSOCIATED COMPONENTS IN THE CF SYSTEM AND/OR REFERRING TO THIS NOTE SHALL BE CLASSIFIED AS FOLLOWS:
   SEISMIC CATEGORY II
   QUALITY CALSS II
   CODE GROUP D
9. ALL PIPING DOWNSTREAM OF THE LAST ISOLATION VALVE AND OPEN TO THE ATMOSPHERE WITH THE SUBSYSTEM DESIGNATION "SYSTEM" (50) THRU (59) SHALL BE CLASSIFIED AS CODE GROUP D WITH QUALITY CLASS AND SEISMIC CATEGORY PROVIDED BY THE APPLICABLE NOTES ON THIS DRAWING, EXCEPT WHERE THE APPLICABLE NOTES CALL FOR QUALITY CLASS II+, PIPING SHALL BE QUALITY CLASS II. (+ SEE NOTE 12, WNP-2 SPEC., SECTION 15B.1 TABLE 2 NOTES.)
10. SPARE BOTTOM TANK NOZZLES HAVE REMOVABLE PLUGS INSTALLED FLUSH WITH TANK BOTTOMS TO ELIMINATE DEAD LEG CRUD TRAPS.
11. SCOPED AND HASHED AREAS ARE DEFERRED FOR LATER PRE-OPERATIONAL TESTING AND ARE NOT PRESENTLY OPERATIONAL.
12. SEE DWG M501 FOR FLOW DIAGRAM LEGENDS, SYMBOLS AND ABBREVIATIONS.

LEGEND

1. ALL VALVES SUFFIXED WITH A (V) DENOTE A 3/4" VENT VALVE.
2. ALL VALVES SUFFIXED WITH A (D) DENOTE A 3/4" DRAIN VALVE. (EXCEPT WHERE NOTED)
3. ALL VALVES SUFFIXED WITH A (Th) DENOTE A THROTTLED VALVE.

Columbia Generating Station
Final Safety Analysis Report

Flow Diagram Chemical Waste Processing

Draw. No. M533-1	Rev. 24	Figure 11.2-4.1

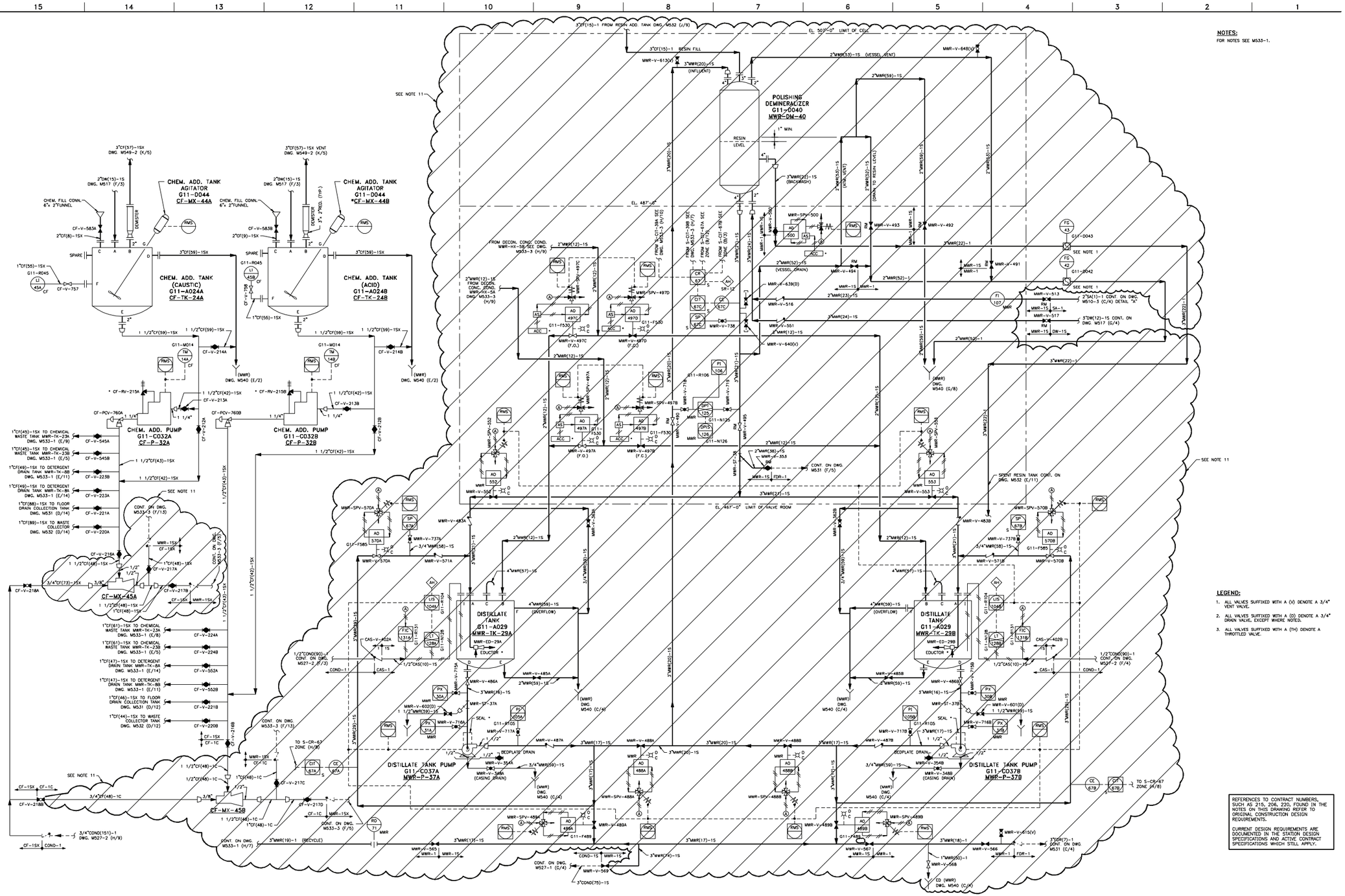
NOTES:
FOR NOTES SEE M533-1.
LEGEND:
1. ALL VALVES SUFFIXED WITH A (V) DENOTE A 3/4" VENT VALVE.
2. ALL VALVES SUFFIXED WITH A (D) DENOTE A 3/4" DRAIN VALVE, EXCEPT WHERE NOTED.
3. ALL VALVES SUFFIXED WITH A (TH) DENOTE A THROTTLED VALVE.
REFERENCES TO CONTRACT NUMBERS, SUCH AS 215, 206, 220, FOUND IN THE NOTES ON THIS DRAWING REFER TO ORIGINAL CONSTRUCTION DESIGN REQUIREMENTS.
CURRENT DESIGN REQUIREMENTS ARE DOCUMENTED IN THE STATION DESIGN SPECIFICATIONS AND ACTIVE CONTRACT SPECIFICATIONS WHICH STILL APPLY.
CHEM. ADD. TANK AGITATOR G11-D044 CF-MX-44A
CHEM. ADD. TANK AGITATOR G11-D044 *CF-MX-44B
CHEM. ADD. TANK (CAUSTIC) G11-A024A CF-TK-24A
CHEM. ADD. TANK (ACID) G11-A024B CF-TK-24B
CHEM. ADD. PUMP G11-C032A CF-P-32A
CHEM. ADD. PUMP G11-C032B CF-P-32B
CF-MX-45A
CF-MX-45B
POLISHING DEMINERALIZER G11-D040 MWR-DM-40
DISTILLATE TANK G11-A029 MWR-TK-29A
DISTILLATE TANK G11-A029 MWR-TK-29B
DISTILLATE TANK PUMP G11-C037A MWR-P-37A
DISTILLATE TANK PUMP G11-C037B MWR-P-37B
EL. 507'-0" LIMIT OF CELC
EL. 487'-0" LIMIT OF VALVE ROOM
RESIN LEVEL
1" MIN.
SEE NOTE 11
SEE NOTE 1
(MWR) DWG. M540 (E/2)
(MWR) DWG. M540 (G/8)
(MWR) DWG. M540 (C/4)
CONT. ON DWG. M533-3 (F/13)
CONT. ON DWG. M533-1 (H/7)
CONT. ON DWG. M527-1 (D/4)
SPENT RESIN TANK CONT. ON DWG. M532 (E/11)
CONT. ON DWG. M531 (F/5)
TO S-CR-67 ZONE (H/8)
TO S-CR-67 ZONE (H/8)
(OVERFLOW)
(BACKWASH)
(VESSEL VENT)
(VESSEL DRAIN)
(DRAIN TO RESIN LEVEL)
(ATM. VENT)
RECIRCULATION
RECIRCULATION
RECIRCULATION

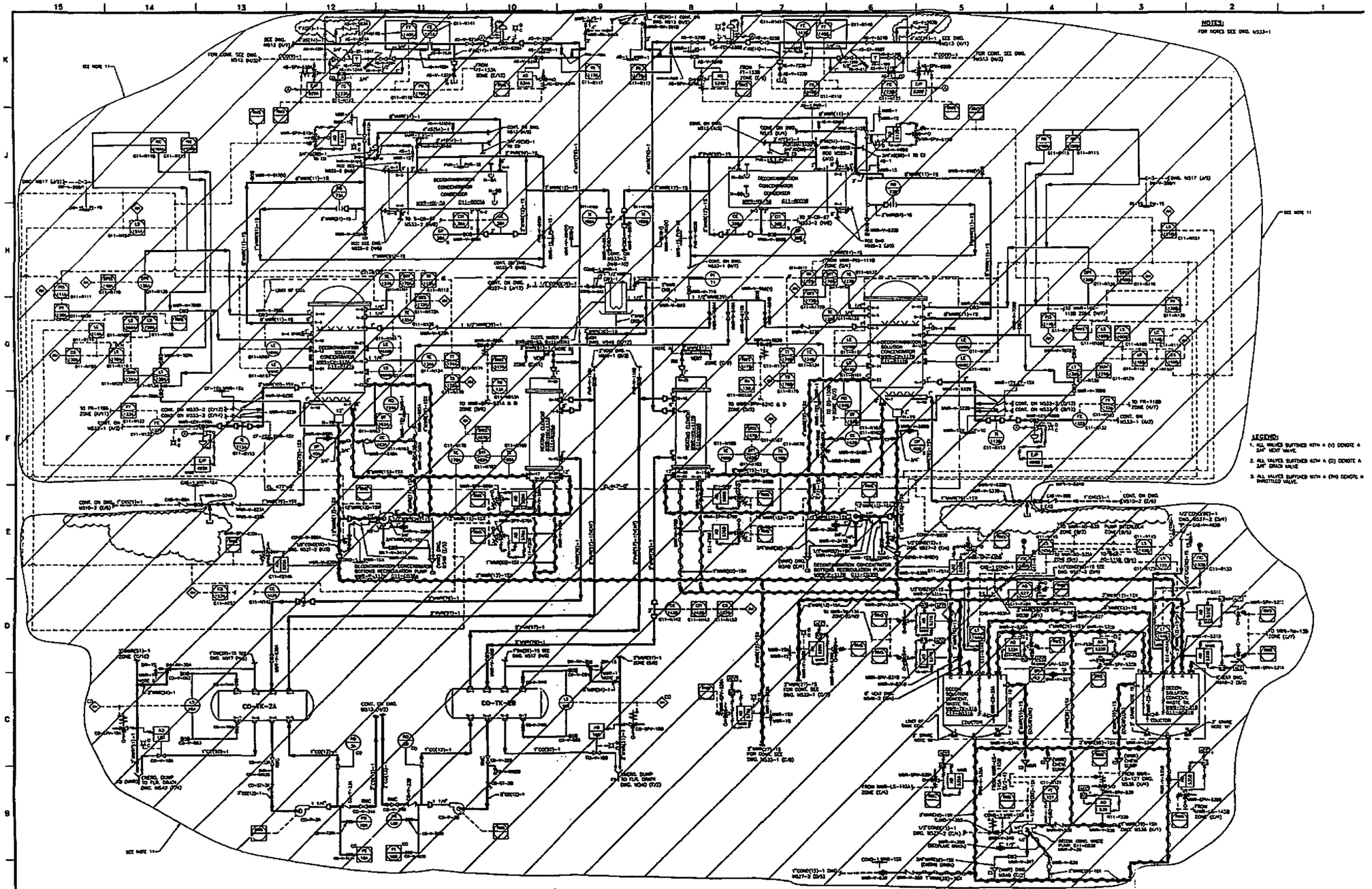

Columbia Generating Station Final Safety Analysis Report	Flow Diagram Chemical Waste Processing		
	Draw. No. M533-3	Rev. 29	Figure 11.2-4.3

11.3 GASEOUS WASTE MANAGEMENT SYSTEMS

11.3.1 DESIGN BASES

The objective of the gaseous waste management system is to process and control the release of gaseous radioactive effluents to the site environs so as to maintain as low as reasonably achievable the exposure of persons in unrestricted areas to radioactive gaseous effluents, during normal and anticipated operational occurrences. This is to be accomplished while maintaining occupational exposure as low as is reasonably achievable (ALARA) and without limiting plant operation or availability.

The gaseous waste management systems are designed to limit the dose to offsite persons from routine station releases to significantly less than the limits specified in 10 CFR 20 and to operate within the emission rate limits established in the Technical Specifications.

To evaluate the offgas system design compliance with the limits of 10 CFR 20, an annual average noble radiogas source term (based on 30-minute decay) of 100,000 µCi/sec of the "1971 Mixture" as discussed in Section 11.1 is used. The noble radiogas effluent release rate from the charcoal adsorbers is about 49-59 µCi/sec based upon 30 scfm air inleakage and injection. The isotopic composition is given in Table 11.3-1 in units of µCi/sec and Ci/yr.

To evaluate that the annual average exposure at the site boundary during normal operation and anticipated operational occurrences from gaseous effluents does not exceed the dose objectives of Appendix I to 10 CFR 50, an average source term release rate derived from field measurements (1993-2003) is used.

Equipment and components used to collect, process, or store gaseous radioactive waste are not designed as Seismic Category I. To evaluate that equipment failure will not result in offsite whole body doses exceeding 0.5 rem in two hours, the Technical Specification release rate limit was used, consistent with the guidance presented in Reference 11.3-7.

The gaseous radwaste equipment is selected, arranged, and shielded to maintain occupational exposure ALARA. The system was designed prior to the issuance of Regulatory Guide 8.8. However, the system incorporates substantially the guidance provided in this regulatory guide. The gaseous effluent treatment system conforms to the requirements of General Design Criteria 60 and 64 as specified in Section 3.1.

A list of the major offgas system components and design features is provided in Table 11.3-2. Equipment and piping is designed and constructed in accordance with the requirements of the applicable codes as given in Tables 3.2-1 and 3.2-2.

The quality group classifications of the various systems are shown in Table 3.2-1. Seismic category, safety class, quality assurance requirements, and principal construction codes

information are contained in Section 3.2. The system is designed to Quality Group Classification D+.

11.3.2 SYSTEM DESCRIPTION

11.3.2.1 Main Condenser Steam Jet Air Ejector RECHAR System

The offgas from the main condenser steam jet air ejector (SJAE) is treated by means of a system utilizing catalytic recombination and charcoal adsorption (RECHAR system) (see Figure 11.3-1). Descriptions of the major process components including design temperature and pressure are given in Table 11.3-2 and in the following.

Noncondensable radioactive offgas is continuously removed from the main condenser by the air ejector during plant operation. The air ejector offgas will normally contain activation gases, principally ^{16}N, ^{19}O, and ^{13}N. The ^{16}N and ^{19}O have short half-lives and are readily decayed. ^{13}N with a 10-minute half-life is present in small amounts that are further reduced by decay. Activation gas source terms are presented in Table 11.1-4.

The air ejector offgas will also contain radioactive noble gases including parents of biologically significant ^{89}Sr, ^{90}Sr, ^{140}Ba, and ^{137}Cs. The concentration of these noble gases depends on the amount of tramp uranium in the coolant and on the cladding surfaces (usually extremely small) and the number and size of fuel cladding defects.

A main condenser offgas treatment system has been incorporated in the plant design to reduce the radioactive gaseous effluents from the station. The offgas system uses a catalytic recombiner to recombine hydrogen and oxygen. After cooling (to approximately 130°F) to strip the condensables and reduce the volume, the remaining noncondensables (principally air with traces of krypton and xenon) are delayed in a holdup line. The gas is cooled to 45°F and processed through a HEPA filter. The gas is then passed through a desiccant dryer that reduces the dewpoint to approximately -90°F. Charcoal adsorption beds selectively adsorb and delay the xenon and krypton from the bulk carrier gas (principally dry air). With an air inleakage of 30 scfm, this treatment system results in a delay of 15 hr for krypton and 9.5 days for xenon. After the delay, the gas is again passed through a HEPA filter and discharged to the environment through the reactor building elevated release duct.

Figure 11.3-1 is the process flow diagram for the system. The process data for startup and normal operating conditions are submitted as proprietary data under separate cover as Table 11.3-3. The information supporting the process data is presented in Reference 11.3-2. The system is mechanically capable of processing three times the source terms of Table 11.3-1 without affecting delay time of the noble gases.

Table 11.3-1 also lists isotopic activities at the discharge of the system, from which the decontamination factor for each noble gas isotope can be determined.

The flow diagram is shown in Figure 11.3-2. The main process routing is indicated by a heavy line.

The basis for sizing the recombiner is to maintain the hydrogen concentration below 4% (including steam) at the inlet and below 1% at the outlet on a dry basis. The exit hydrogen concentration is normally well below the 1% maximum allowed. The hydrogen generation rate of the reactor is based on data from nine boiling water reactors (BWR). The hydrogen generation rate is given in Table 11.3-3.

The krypton and xenon holdup time is closely approximated by the following equation:

$$T = \frac{K_D M}{V}$$

where:

T = holdup time of a given gas, seconds.

K_D = dynamic adsorption coefficient for the given gas, $\frac{cm^3}{gram}$

M = weight of charcoal, grams

V = flow rate of the carrier gas, $\frac{cm^3}{sec}$

Dynamic adsorption coefficient values for xenon and krypton used to determine gaseous effluent releases are discussed in Reference 11.3-1. Moisture has a detrimental effect on adsorption coefficients. To prevent moisture from reaching the charcoal, fully redundant, adsorbent (-90°F dewpoint) air dryers are supplied. There are redundant moisture analyzers that will alarm on breakthrough of the dryer beds; however, breakthrough is not expected since the dryer beds will be regenerated on a time basis. The system is slightly pressurized, which together with very stringent leak rate requirements, prevents leakage of moist air into the charcoal.

After the hydrogen and oxygen are removed by the recombiner, the remaining carrier gas is primarily nitrogen with a small percentage of oxygen due to the air inleakage from the main condenser and air injection from the HWC system. Analyses have shown that the system can maintain condenser vacuum at combined air injection and air inleakage rates as high as 93 scfm. Reference 11.3-3, Par. S1 (c) (2) indicates that with certain conditions of stable operation and suitable construction, noncondensables (not including radiological decomposition products) should not exceed 6 scfm per condenser shell for large condensers. Dilution air is not added to the system unless the air inleakage is less than 6 scfm. In that event, 6 scfm is

added to provide for dilution of residual hydrogen from the recombiner. An initial bleed of oil-free air is added on startup until the recombiner reaches operating temperature.

The charcoal adsorbers design process flow sheet is for an ambient temperature. Operation at ambient temperature is sufficient to reduce gaseous radioactivity levels to a fraction of that allowed by 10 CFR 50 Appendix I. The decay heat is sufficiently small that, even in the no-flow condition, there is no significant loss of adsorbed noble gases due to temperature rise in the adsorbers. The adsorbers are located in a shielded room and maintained at ambient room temperature. A radiation monitor is provided to monitor the radiation level in the air handling room of the charcoal bed vault for high gas activity from a system leak. High radiation will cause an alarm in the control room.

Channeling in the charcoal adsorbers is prevented by supplying an effective flow distributor on the inlet, having long columns and having a high bed-to-particle diameter ratio of approximately 500. Underhill has stated that channeling or wall effects may reduce efficiency of the holdup bed if this ratio is not greater than 12 (Reference 11.3-4). During transfer of the charcoal into the charcoal adsorber vessels, radial sizing of the charcoal will be minimized by pouring the charcoal (by gravity or pneumatically) over a cone or other instrument to spread the granules over the surface.

A valve is provided to bypass the charcoal adsorbers. The main purpose of this bypass is to protect the charcoal during preoperational and startup testing when gas activity is zero or very low.

It may be desirable to use the bypass for short periods during startup or normal operations. This bypass mode would not be used for normal operation unless some unforeseen system malfunction would necessitate shutting down the power plant or operating in the bypass mode and remaining within the technical specification radioactivity release limits. The radioactivity released is controlled by a process monitor upstream of the vent isolation valve that will cause the bypass valve to close on a high radiation alarm. This interlock can be defeated only by a key lock switch. In addition, there is a high-high-high alarm setpoint on the same monitor that will cause isolation of the offgas system if established release rate limits are reached.

Leakage of radioactive gases from the system is limited by welding piping connections where possible and using bellows stem seals or equivalent leakage control valving. The system operates at a maximum of 7 psig during startup and less than 2 psig during normal operation so that the differential pressure to cause leakage is small.

Hydrogen concentration of gases from the air ejector is kept below the flammable limit by maintaining adequate process steam flow for dilution at all times. This steam flow rate is monitored and alarmed in the main control room.

Two parallel independent hydrogen analyzers are used to measure the hydrogen content of the offgas process flow downstream of the offgas condenser. The hydrogen concentration percentage output from the analyzers is indicated and recorded in the main control room along with independent alarm annunciation for a high hydrogen concentration. Each hydrogen analyzer continuously withdraws a sample of the process offgas, conditions the gas to a constant pressure, analyzes the hydrogen content, and returns the sample gas to the main condenser. The main condenser vacuum provides the pumping force to withdraw the sample gas from the offgas process line and through the hydrogen analyzer system. The analyzer element is a thermal conductivity cell type unit and does not serve as an ignition source to a detonable hydrogen-oxygen mixture.

Piping and tubing 2 in. and under is field routed, but required to be in specified space envelopes for shielding and in-plant exposure consideration. In the offgas system this includes drain lines, steam lines, and sample lines which are shown in Figure 11.3-2.

There are several liquid seals to prevent gas escape through drains shown in Figure 11.3-2. These seals are protected against permanent loss of liquid by an enlarged section downstream of the seal that can hold the seal volume and will drain by gravity back into the loop after a momentary pressure surge has passed. Each seal has a manual valve that is used to fill the loop with condensate after receiving a loop seal low level alarm.

Iodine input into the offgas system is small by virtue of its retention in reactor water and condensate. The iodine remaining is essentially removed by adsorption in the charcoal. This is supported by the fact that 2-in. charcoal filters remove more than 90% of the influent iodine, whereas this system has approximately 76 ft of charcoal in the flow path.

Particulates are removed with a 99.95% efficiency by a HEPA filter prior to the gas entering the charcoal adsorbers. The noble gas decays within the interstices of the activated charcoal and daughters are entrapped there. The charcoal serves as an excellent filter for particulates and essentially no particulates exit from the charcoal. The charcoal is followed with a HEPA filter which is a safeguard against escape of charcoal dust. Particulate activity discharged from this system is essentially zero.

With an airflow of about 30 scfm and the charcoal adsorbers bypassed, the delay time of the system decreases to approximately 10 minutes. This bypass line is only intended to be used during preoperational testing, and initial system startup operation until proper functioning of upstream equipment is established. This prevents possible degradation of the charcoal due to the introduction of excessive moisture or other contaminants.

In the unlikely event it is necessary to bypass the charcoal adsorbers to continue operation, the bypassing operation shall be allowed only if the radioactive effluents are within the release limits.

The isotopic inventory of each equipment piece, based on the source term discussed in Section 11.1, is given in Reference 11.3-5.

Performance of a similar system operating at ambient temperatures and the results of related experimental testing are discussed in Reference 11.3-2. The Tsuruga and Fukushima 1 plants in Japan have similar recombiners in service. Similar systems (ambient temperature charcoal) are in service at Dresden 2 and 3, Pilgrim, Quad Cities 1 and 2, Nuclenor, Hatch, Browns Ferry 1, 2, and 3, and Duane Arnold.

Design provisions are incorporated which preclude the uncontrolled release of radioactivity to the environment as a result of any single operator error or of any single failure. A comprehensive discussion of single failures is provided in Table 11.3-5.

Design precautions taken to prevent uncontrolled releases of radioactivity include the following:

a. The system design eliminates ignition sources so that a hydrogen detonation is highly unlikely even in the event of a recombiner failure;

b. The system pressure boundary is detonation resistant;

c. All discharge paths to the environment are monitored--the normal effluent path by the process radiation monitoring system and equipment areas by the area radiation monitoring system; and

d. Dilution steam flow to the SJAE is monitored and alarmed. Valve control logic causes the air ejector suction valves to close on low steam flow.

11.3.2.2 Other Radioactive Gas Sources

There are three buildings that contain radioactive gas sources. They are the reactor building, the turbine generator building, and the radwaste building. The ventilation systems for these three buildings are described in Section 9.4. Building volumes and ventilation flow rates are shown in Table 11.3-8. The sources of gaseous radioactivity in these buildings are discussed below. In-plant airborne radioactivity concentrations are discussed in Section 12.2.2.

The primary containment is divided into two sections which are designated as the drywell and suppression chamber. These are separated by the drywell floor which serves as a pressure barrier between the drywell and suppression chamber.

Radioactive halogens and noble gases can be introduced into the drywell atmosphere from two sources. One source is the leakage that occurs from the valves, especially the main steam isolation valves (MSIVs), the inner refueling bellows seal support drains and the main

recirculation pumps. This leakage is collected by means of leak-off lines which are directed to the drywell equipment drain sump.

The other source of activity results when a pressure transient causes the main steam relief valves to open with the resulting flow of steam into the suppression pool. When this occurs, there is a pressure buildup in the suppression chamber atmosphere. A tabulation of the expected relative frequency of pressure relief valve venting to the suppression pool is provided in Table 11.3-10. If the pressure differential across the drywell floor is greater than 0.5 psi, the vacuum breaker valves relieve this pressure into the drywell atmosphere. Thus, radioactivity in the suppression chamber atmosphere is introduced into the drywell. The drywell atmosphere is purged to the environment via the reactor building elevated release duct when access is required, either directly or through the standby gas treatment system, considering airborne radiation levels and release limits.

The reactor building ventilation system supplies fresh air to the secondary containment and exhausts air through the reactor building elevated release duct. There is a small amount of activity in the secondary containment atmosphere that emanates from the various reactor support systems. The reactor building ventilation exhaust is monitored and a radiation level, set by administrative control to ensure Technical Specifications compliance, will cause automatic heating, ventilating, and air-conditioning (HVAC) system isolation, startup of the standby gas treatment system (SGTS), and an alarm in the control room.

There are three sources of nontreated radioactive gas sources in the turbine generator building which are as follows:

a. Gland seal steam leakage and condenser exhaust,
b. Equipment leakage, and
c. Main condenser offgas during startup.

The activity from these sources is presented in Table 11.3-7.

Gland seal leakage and condenser exhaust contribute essentially no airborne radioactivity releases due to use of “clean” steam as discussed in Section 10.4. During startup, the mechanical vacuum pumps remove the gas present inside the main condenser. The exhaust from these pumps is discharged through the reactor building elevated release duct. Due to radioactive decay during shutdown, only a small amount of activity is exhausted by the vacuum pumps during startup.

Sources of gaseous radioactivity in the radwaste building include,

a. Offgas system leakage,
b. Liquid leakage to the radwaste building,

c. Liquid waste management system tank vents, and
d. Hydropneumatic transfer of resins.

Measures taken to minimize leakage from the offgas system are described in Section 11.3.2.1. Liquid leakage from equipment and floor drains in the radwaste building is collected in sumps. The sumps and tanks containing liquid radwaste are vented to the radwaste building exhaust system described in Section 9.4.3.2. The air blow during the backwash of the spent powdered resins to the phase separators generates airborne radioactivity which is vented to the radwaste building filtered exhaust system.

11.3.2.3 Cost-Benefit Analysis

The cost-benefit analysis is discussed in Section 11.2.3.4.

11.3.2.4 Design Features of the Offgas System

Design features of other gaseous waste management systems may be found in Section 9.4.

11.3.2.4.1 Maintainability

Design features which reduce or ease required maintenance include the following:

a. Redundant components for all active, in-process equipment pieces, and

b. No rotating equipment in the process stream and elsewhere in the system only where maintenance can be performed while the system is in operation.

11.3.2.4.2 Pressure Boundaries

Design features and requirements which reduce leakage and releases of radioactive material include the following:

a. Extremely stringent leak rate requirements placed on all equipment, piping, and instruments, and enforced by requiring as-installed leak tests of the entire process system,

b. Use of welded joints except where servicing access to equipment and instrumentation access dictates use of flanged joints,

c. Valve types with extremely low leak rate characteristics, i.e., bellows seals double stem seal, or diaphragm,

d. Use of loop seals with enlarged discharge section to avoid siphoning and to be self-refilling by gravity following a pressure surge, and

e. Stringent seat-leak characteristics for valves in lines discharging to the environment via other systems.

11.3.2.4.3 Building Seismic Design

The offgas system is located in the turbine generator and radwaste buildings. The portion of the turbine generator building housing the offgas system is a modified Seismic Category II structure designed to withstand the effects of a safe shutdown earthquake (SSE) and maintain its structural integrity. The portion of the radwaste building housing the offgas system is a Seismic Category I structure. The seismic classification of the turbine generator and radwaste buildings are discussed in Sections 3.8.4.1.3 and 3.8.4.1.2, respectively.

11.3.2.4.4 Construction of Process Systems

Pressure retaining components of process systems utilize welded construction to the maximum practicable extent. Process piping systems include the first root valve on sample and instrument lines. Process lines are not less than 0.75 in. nominal pipe size. Sample and instrument lines are not considered as portions of the process systems. Flanged joints or suitable rapid disconnect fittings are not used except where maintenance requirements clearly indicate that such construction is preferable. Screwed connections in which threads provide the only seal are not used. Screwed connections backed up by seal welding or mechanical joints are used only on lines of 0.75 in. nominal pipe size or less. In lines 0.75 in. or greater, but less than 2.5 in. nominal pipe size, socket type welds are used. In lines 2.5 in. nominal pipe size and larger, pipe welds are of the butt joint type.

11.3.2.4.5 Instrumentation and Control

The offgas system is monitored by flow, temperature, pressure, and humidity instrumentation, and by hydrogen analyzers to ensure correct operation and control. Table 11.3-4 lists the process parameters that are instrumented to alarm in the control room and indicates whether the parameters are recorded or just indicated.

The radioactivity of the gas entering and leaving the offgas system is continuously monitored. Thus, system performance is known to the operator at all times. A radiation monitor after the offgas condenser continuously monitors radioactivity release from the reactor and input to the charcoal adsorbers. This radiation monitor is used to provide an alarm on high radiation in the offgas. A sample rack with two radiation monitors is also provided at the outlet of the charcoal adsorbers to continuously monitor the radioactivity from the adsorber beds. These radiation monitors are used to isolate the offgas system on high radioactivity to prevent gas of

unacceptably high activity from entering the reactor building elevated release duct. Only one monitor is required to be operable.

The offgas system at the SJAE is sampled periodically in accordance with the Technical Specifications. Provision is made for sampling and periodic analysis of the influent and effluent gases for purposes of determining their compositions. This information is used in calibrating the monitors and in relating the release to calculated offsite doses. Process radiation instrumentation is described in detail in Sections 11.5 and 7.6.1.1.

11.3.2.4.6 Detonation Resistance

The pressure boundary of the system is designed to be detonation resistant. The pressure vessels are designed to withstand 350 psig static pressure, and piping and valves are designed to resist dynamic pressures encountered in long runs of piping at the design temperature. This analysis is covered in a proprietary report submitted to the NRC (Reference 11.3-6).

By this procedure a designer obtains the required wall thickness for specific equipment to sustain a hydrogen and oxygen detonation. The wall thickness is then translated by using the appropriate code calculation to the corresponding equipment that must contain the detonation static pressure. The method assumes the absence of simultaneous secondary events such as earthquakes.

11.3.2.4.7 Operator Exposure Criteria and Controls

This system is normally operated from the main control room. Equipment and process valves containing radioactive fluid are placed in shielded cells maintained at a pressure negative to normally occupied areas. Ventilation air flows from areas of low airborne contamination to areas of higher airborne contamination. Operating offgas process equipment does not require personnel access. Redundant equipment is located in separate cells, minimizing exposure of maintenance personnel. No process fluid is passing through instrumentation panels. Signals from the process streams are transmitted to the instrumentation panels by means of electrical signal converters. Design features minimizing occupational exposure are discussed in Sections 11.3.2.4.1 and 12.3.1.3.

11.3.2.4.8 Equipment Malfunction

Malfunction analyses indicating consequences and design precautions taken to accommodate failure of various components of the system are given in Table 11.3-5.

11.3.2.5 Offgas System Operating Procedure

11.3.2.5.1 Prestartup Preparations

Prior to starting the main condenser SJAEs, the glycol coolant is chilled to near 35°F and is circulated through the cooler condenser, a desiccant dryer is regenerated and valved in, the offgas condenser cooling water is valved in, and the recombiner heaters are turned on.

11.3.2.5.2 Startup

As the reactor is pressurized, preheater steam is supplied and air is bled through the preheater and recombiner. The recombiner is preheated to at least 300°F with this air bleed and/or by admitting steam to the final SJAE. With the recombiners preheated and the desiccant dryer and charcoal adsorbers valved in, the SJAE string is started. The bleed air is terminated. As the condenser is pumped down and the reactor power increases, the recombiner inlet stream is diluted to less than 4% hydrogen by volume by a fixed steam supply, and the offgas condenser outlet is maintained at less than 1% hydrogen by volume.

11.3.2.5.3 Normal Operation

After startup, the noncondensables pumped by the SJAE will stabilize. Recombiner performance is closely followed by the recorded temperature profile in the recombiner catalyst bed. The hydrogen effluent concentration is measured by a hydrogen analyzer.

Normal operation is terminated following a normal reactor shutdown or a scram by terminating steam to the SJAEs and the preheater.

11.3.2.6 Offgas System Performance Tests

This system is used on a routine basis and does not require specific testing to ensure operability. Monitoring equipment will be calibrated and maintained on a specific schedule and on indication of malfunction.

11.3.2.6.1 Recombiner

Recombiner performance is continuously monitored and recorded by catalyst bed thermocouples that monitor the bed temperature profile and by a hydrogen analyzer that measures the hydrogen concentration of the effluent.

11.3.2.6.2 Prefilter

These particulate filters were tested at the time of filter installation using dioctylphthalate (DOP) aerosol to determine whether an installed filter meets the minimum in-place efficiency 99.95% particle retention.

The DOP from filter testing is not allowed to enter into the desiccant or the activated charcoal. This equipment is isolated during filter DOP testing and is bypassed until the process lines have been purged clear of test material. Because the DOP may have a detrimental effect on the desiccant and charcoal, the prefilter will not be periodically tested. This is justified because the main function of this prefilter is to prevent the long-lived daughters of the radioactive xenons generated in the holdup pipe from depositing in the downstream equipment. Leakage through the filter would be unimportant to environmental release.

11.3.2.6.3 Desiccant Gas Dryer

Desiccant gas dryer performance is continuously monitored by an on-stream humidity analyzer.

11.3.2.6.4 Charcoal Performance

The ability of the charcoal to delay the noble gases can be continuously evaluated by comparing radioactivity measured and recorded by the process activity monitors at the exit of the offgas condenser and at the exit of the charcoal adsorbers.

Grab sample points are located upstream and downstream of the first charcoal bed and downstream of the last charcoal bed and can be used for periodic sampling if the monitoring equipment indicates degradation of system delay performance.

11.3.2.6.5 Post Filter

On installation these particulate filters were tested using a DOP aerosol test or equivalent, as described in Section 11.3.2.6.2.

11.3.3 RADIOACTIVE RELEASES

11.3.3.1 Release Points

The reactor building elevated release duct serves the following systems:

Offgas system,
Mechanical vacuum pump and gland seal condenser exhaust,
Reactor building ventilation exhaust,

Containment purge, and
Standby gas treatment system.

The reactor building elevated release duct location is shown in reactor building general arrangement drawings in Section 1.2.

The radwaste building ventilation exhausts through three louver houses 67 ft above plant grade. The location is shown on Figure 1.2-17.

The exhaust from the turbine generator building ventilation system is through four exhaust fans located on the radwaste building, 119 ft above plant grade. Their location is shown on Figure 1.2-16 (part plan of roof at el. 542 ft-0 in.) and in Figure 1.2-17.

The height, flow rate, heat content, and dimensions of the three release points are shown on Table 11.3-6.

11.3.3.2 Dilution Factors

The dispersion and dilution of gaseous radioactive effluents released from the plant depends on the meteorology of the site and its environs. To determine these parameters, onsite meteorological data has been obtained and analyzed as described in Section 2.3. Annual atmospheric dilution factors have been calculated to determine resultant annual doses and concentrations of radionuclides from normal operation.

The building ventilation exhaust ducts do not rise above the buildings; therefore, atmospheric releases for dose analysis purposes were considered ground level.

11.3.3.3 Estimated Releases

Releases of radioactive material in gaseous effluents for initial plant licensing were calculated using the GALE code presented in NUREG-0016 to show compliance with 10 CFR 20, Appendix B, and 10 CFR 50, Appendix I, for normal operation plus anticipated operational occurrences. The operational parameters including source terms were those presented in Appendix B. The values obtained are presented in Table 11.3-7. These values were used with the meteorology data from Section 2.3.5 to calculate maximum concentrations at the restricted area boundary and maximum individual dose offsite. These data provide maximum annual average (χ/Q) values and does not include a building wake factor.

Restricted area boundary concentrations used for this initial licensing analysis are tabulated by radionuclide and compared with 10 CFR 20 limits in Table 11.3-9. The estimated annual dose to persons offsite is presented in Section 5.2 of the Environmental Report and is well within the numerical guidelines of 10 CFR 50, Appendix I.

Since becoming operational, releases of radioactive materials in gaseous effluents have been determined using actual flow rates and quantitative and qualitative analyses. Doses due to radioactive materials in gaseous effluents are determined to show Technical Specifications compliance at specified intervals. Compliance is reported in the Annual Radioactive Effluent Release Report. Doses are ascertained using ODCM approved calculation methods, current meteorology (or historical meteorology if current data are unavailable), and parameters outlined in the Offsite Dose Calculation Manual.

Tritium contamination of the auxiliary boiler and associated components has resulted in release paths which were not intended (see Section 9.4.16.2). The released radioactivity attributable to the worst case tritium concentration (2E + 06 ρCi/liter) in the boiler water is an insignificant portion of the total activity released in liquid and gaseous effluents and has been analyzed to result in a correspondingly insignificant radiation dose. The tritium concentration levels and makeup water volume are monitored and evaluated to ensure that tritium effluent releases from the plant are adequately quantified.

11.3.4 REFERENCES

11.3-1 NUREG-0016 (BWR-GALE Code), January 1979

11.3-2 Miller, C. W., Experimental and Operational Confirmation of Off-Gas System Design Parameters, NEDO-10751, January 1973 (Proprietary).

11.3-3 Standards for Steam Surface Condensers, Sixth Edition, Heat Exchange Institute, New York, NY, 1970.

11.3-4 Underhill, Dwight, et al., “Design of Fission Gas Holdup Systems,” Processing of the Eleventh AEC Air Cleaning Conference, 1979, p. 217.

11.3-5 Miller, C. W., et al., A General Justification for Classification of Effluent Treatment System Equipment as Group D, NEDO-10734, February 1973.

11.3-6 Nesbitt, L. B., Design Basis for New Gas Systems, NEDE-11146, July 1971 (Proprietary).

11.3-7 NUREG-0800 USNRC Standard Review Plan, Revision 2, July 1981, Branch Technical Position ETSB 11-5.

Table 11.3-1

Design Air Ejector Offgas Release Rates (30 cfm inleakage) [a]

				Normal Discharge from Charcoal Adsorbers		Additional Discharge from Charcoal Adsorbers During Startup	
		T=0	T=30 Minutes				
Isotope	Half-life	μCi/sec	μCi/sec	μCi/sec	Ci/yr[b]	μCi/sec	Ci/startup
^{83m}Kr	1.86 hr	3.4×10^{3}	2.9×10^{3}	-	-	-	-
^{85m}Kr	4.4 hr	6.1×10^{3}	5.6×10^{3}	4.3	1.2×10^{2}	1.1×10^{1}	1.4
^{85}Kr[c]	10.74 yr	10-20	10-20	10-20	280-560	0	0
^{87}Kr	76 minutes	2.0×10^{4}	1.5×10^{4}	-	-	-	-
^{88}Kr	2.79 hr	2.0×10^{4}	1.8×10^{4}	2.1×10^{-1}	6.0	1.4	1.7×10^{-1}
^{89}Kr	3.18 minutes	1.3×10^{5}	1.8×10^{2}	-	-	-	-
^{90}Kr	32.3 sec	2.8×10^{5}	-	-	-	-	-
^{91}Kr	8.6 sec	3.3×10^{5}	-	-	-	-	-
^{92}Kr	1.84 sec	3.3×10^{5}	-	-	-	-	-
^{93}Kr	1.29 sec	9.9×10^{4}	-	-	-	-	-
^{94}Kr	1.0 sec	2.3×10^{4}	-	-	-	-	-
^{95}Kr	0.5 sec	2.1×10^{3}	-	-	-	-	-
^{97}Kr	1 sec	1.4×10^{1}	-	-	-	-	-
^{131m}Xe	11.96 days	1.5×10^{1}	1.5×10^{1}	1.3	3.7×10^{1}	3.0×10^{-2}	1.07×10^{-1}
^{133m}Xe	2.26 days	2.9×10^{2}	2.8×10^{2}	-	-	-	-
^{133}Xe	5.27 days	8.2×10^{3}	8.2×10^{3}	3.3×10^{1}	9.4×10^{2}	1.9	6.8
^{135m}Xe	15.7 minutes	2.6×10^{4}	6.9×10^{3}	-	-	-	-
^{135}Xe	9.16 hr	2.2×10^{4}	2.2×10^{4}	-	-	-	-
^{137}Xe	3.82 minutes	1.5×10^{5}	6.7×10^{2}	-	-	-	-
^{138}Xe	14.2 minutes	8.9×10^{4}	2.1×10^{4}	-	-	-	-
^{139}Xe	40 sec	2.8×10^{5}	-	-	-	-	-
^{140}Xe	13.6 sec	3.0×10^{5}	-	-	-	-	-
^{141}Xe	1.72 sec	2.4×10^{5}	-	-	-	-	-
^{142}Xe	1.22 sec	7.3×10^{4}	-	-	-	-	-
^{143}Xe	0.96 sec	1.2×10^{4}	-	-	-	-	-
^{144}Xe	9 sec	5.6×10^{2}	-	-	-	-	-
	Totals	2.5×10^{6}	1.0×10^{5}	49-59	1383-1663	14.3	8.5

[a] Based on the 1971 mixture.
[b] This is based on curies present at time of release. No decay in environment is included.
[c] Estimated from experimental observations.

Table 11.3-2

Offgas System Major Equipment Items

Offgas Preheaters - two required

Construction: Stainless steel tubes and carbon steel shell. 350 psig shell design pressure, 1000 psig tube design pressure. 400°F shell design temperature, 575°F tube design temperature.

Catalytic Recombiners - two required

Construction: Stainless steel cartridge, carbon steel shell. Catalyst cartridge containing a precious metal catalyst on metal base. Catalyst cartridge to be replaceable without removing vessel. 350 psig design pressure, 900°F design temperature.

Offgas Condenser - one required

Construction: Low alloy steel shell. Stainless steel tubes. 350 psig shell design pressure. 250 psig tube design pressure, 900°F shell design temperature, 150°F tube design temperature.

Water Separator - one required

Construction: Carbon steel shell, stainless steel wire mesh. 350 psig design pressure, 250°F design temperature.

Cooler-Condenser - two required

Construction: Stainless steel shell. Stainless steel tubes. 100 psig tube design pressure, 350 psig shell design pressure. 32/150°F tube design temperature, 32/150°F shell design temperature.

Moisture Separators (downstream of cooler-condenser) - two required

Construction: Carbon steel shell, stainless steel wire mesh. 350 psig design pressure, 32/150°F design temperature.

Desiccant Dryer - four required

Construction: Carbon steel shell packed with Type 3A molecular sieve or equivalent. 350 psig design pressure, 32°F/ 500°F design temperature.

Desiccant Regeneration Skid - two required

Table 11.3-2

Offgas System Major Equipment Items (Continued)

Dryer Chiller - two required

Construction: Carbon steel shell, stainless steel tubes, design temperature 32°F/500°F, design pressure 50 psig.

Regenerator Blower - two required

Construction: Electrical, design pressure 50 psig design temperature 32°F/150°F.

Dryer Heater - two required

Construction: Electrical, design temperature 32°F/500°F, design pressure 50 psig.

Glycol Cooler Skid - one required

Glycol Storage Tank - one required

Construction: Carbon steel 3000 gal. Water-filled hydrostatic design pressure. 32°F design temperature. API-650.

Glycol Solution Refrigerators and Motor Drives - three required

Construction: Conventional refrigeration units. Glycol solution exit temperature 35°F.

Glycol Pumps and Motor Drives - three required

Construction: Cast iron, 0°F design temperature.

Prefilters and After Filters - two required of each type

Construction: Carbon steel shell. High-efficiency, moisture-resistant filter element. Flanged shell. 350 psig design pressure. -50/150°F design temperature.

Charcoal Adsorbers - eight beds

Construction: Carbon steel. Approximately 4-ft. O.D. x 21-ft vessels each containing approximately 3 tons of activated carbon. Design pressure 350 psig, design temperature -50/250°F.

Table 11.3-3

Process Data For The Offgas (RECHAR) System

The Information On This Page Is
Proprietary And Was Submitted
Under Separate Cover

(CVI DWG 02N64-04,11,1, Rev. 4 or 02N64-04,11,2, Rev. 2)

Table 11.3-4

Offgas System Alarmed Process Parameters

Parameters	Control Room	
	Indicated	Recorded
Air ejector discharge pressure - high	X	
Preheater discharge temperature - low	X	
Recombiner catalyst temperature - high/low		X
Offgas condenser water level (dual) - high/low	X	
Offgas condenser gas discharge temperature - high (local)	X	
H_2 analysis (offgas condenser discharge) - dual - high		X
Offgas condenser discharge radiation - high		X
Gas flow - high/low		X
Cooler - condenser discharge temperature - high/low		X
Glycol solution temperature - high/low		X
Glycol solution level - low		
Gas drier discharge humidity - high (local)	X	
Prefilter dP - high	X	
Charcoal adsorber temperature - high		X
Charcoal train flow - high/low		X
After filter dP - high	X	
Offgas (charcoal bed discharge) radiation - high		X
Steam flow - low	X	
Desiccant dryer outlet temperature - high/low		X
Dryer chiller outlet temperature - high (local)	X	
Dryer heater temperature - high		
Dryer heater outlet temperature - high (local)	X	
Loop seals water level - low		

Table 11.3-5

Equipment Malfunction Analysis

Equipment Item	Malfunction	Consequences	Design Precautions
Steam jet air ejectors	Low flow of motive high-pressure steam	When the hydrogen and oxygen concentrations exceed 4 and 5 vol %, respectively, the process gas becomes flammable.	Alarm provided on steam for low steam flow. Recombiner temperature alarm.
		Inadequate steam flow will cause overheating and deterioration of the catalyst.	Steam flow to be held at constant maximum flow regardless of plant level during operation.
	Wear of steam supply nozzle of ejector	Increased steam flow to recombiner. This could reduce degree of recombination at low power levels.	Low temperature alarms on preheater exit (recombiner inlet). Recombiner outlet H_2 analyzers.
Preheaters	Steam leak	Would further dilute process offgas. Steam consumption would increase.	Spare preheater.
	Low pressure steam supply	Recombiner performance would fall off at low power level and hydrogen content of recombiner gas discharge may increase, eventually to a combustible mixture.	Low-temperature alarms on preheater exit (recombiner inlet). Recombiner outlet H_2 analyzers.
Recombiners	Catalyst gradually deactivates	Temperature profile changes through catalyst. Eventually excess H_2 would be detected by H_2 analyzer or by gas flowmeter. Eventually the stripped gas could become combustible.	Temperature probes in recombiner and H_2 analyzer provided. Spare recombiner.
	Catalyst gets wet at start	H_2 conversion falls off and H_2 is detected by downstream analyzers. Eventually the gas could become combustible.	Condensate drains, temperature probes in recombiner. Air bleed system at startup. Recombiner thermal blanket, spare recombiner, and heater. Hydrogen analyzer.

Table 11.3-5

Equipment Malfunction Analysis (Continued)

Equipment Item	Malfunction	Consequences	Design Precautions
Offgas condenser	Cooling water leak	The coolant (reactor condensate) would leak to the process gas (shell) side. This would be detected if drain well liquid level increases. Moderate leakage would be of no concern from a process standpoint. (The process condensate drains to the hotwell).	None
	Liquid level instruments fail	If both drain valves fail to open, water will build up in the condenser and pressure drop will increase.	Two independent drain systems, each provided with high and low-level alarms.
		The high ΔP, if not detected by instrumentation, could cause pressure buildup in the main condenser and eventually initiate a reactor scram. If a drain valve fails to close, gas will recycle to the main condenser, increase the load on the SJAE, and increase operating pressure of the main condenser.	
Water separator	Corrosion of wire mesh element	Higher quantity of water collected in holdup line and routed to radwaste.	Stainless steel mesh specified.
Holdup line	Corrosion of line	Leakage to soil of gaseous and liquid fission products.	Outside of pipe dipped and wrapped. 0.25-in. corrosion allowance.
Cooler-condenser	Corrosion of tubes	Glycol-water solution would leak into process (shell) side and be discharged to clean radwaste. If not detected at radwaste, the glycol solution would discharge to the reactor condensate system.	Stainless-steel tubes specified. Low level alarm glycol tank level. Spare cooler condenser provided.

Table 11.3-5

Equipment Malfunction Analysis (Continued)

Equipment Item	Malfunction	Consequences	Design Precautions
Cooler-condenser (continued)	Icing up of the tubes	Shell side of cooler could plug up with ice, gradually building up pressure drop. If this happens, the spare unit could be activated. Complete blockage of both units would increase ΔP and lead to a reactor scram.	Design glycol-H_2O solution temperature well above freezing point. Spare unit provided. Temperature indication and low alarms on glycol temperature and process gas temperature.
Glycol refrigeration machines	Mechanical failure	If both spare units fail to operate, the glycol solution temperature will rise and the dehumidification system performance will deteriorate. This will require rapid regeneration cycles for the desiccant beds and may raise the gas dewpoint as it is discharged from the drier.	Two spare refrigerators during normal operation are provided. Glycol solution temperature alarms provided. Gas moisture detectors provided downstream of gas driers.
Moisture separators	Corrosion of wire mesh	Increased moisture would be retained in process gas routed to gas driers element. Over a long period, the desiccant drier cycle period would deteriorate as a result of moisture pickup. Pressure drop across prefilter may increase if filter media is wetted.	Stainless steel mesh specified. Spare unit provided. High ΔP alarm on prefilter.
Prefilters	Loss of integrity of filter media	More radioactivity would deposit on the drier desiccant. This would increase the radiation level in the drier vault and make maintenance more difficult, but would not affect releases to the environment.	Spare unit provided in separate vault. ΔP instrumentation provided.

Table 11.3-5

Equipment Malfunction Analysis (Continued)

Equipment Item	Malfunction	Consequences	Design Precautions
Desiccant drier	Moisture breakthrough	Increased moisture in air entering charcoal adsorbers would decrease adsorption effectiveness, thus reducing radioisotope retention time.	Drier cycles on timer. Redundant gas humidity analyzers and alarms supplied. Redundant gas drier system supplied. Gas drier and first charcoal bed can be bypassed through alternate drier to second charcoal bed.
Desiccant regeneration equipment	Mechanical failure	Inability to regenerate desiccant.	Redundant, shielded desiccant beds and drier equipment is supplied.
Charcoal adsorbers	Charcoal accumulates moisture	Charcoal performance will deteriorate gradually as moisture deposits. Holdup times for krypton and xenon would decrease, and plant emissions would increase. Provisions made for drying charcoal as required during annual outage.	Highly instrumented, mechanically simple gas dehumidification system with redundant equipment.
After filters	Loss of integrity of filter media	Probably of no real consequence. The charcoal media itself should be a good filter at the low air velocity.	ΔP instrumentation provided. Spare unit provided.
System	Internal detonation	Release of radioactivity if pressure boundary fails.	Main process equipment and piping are designed to contain a detonation.
	Earthquake damage	Release of radioactivity.	Dose consequences are within 10 CFR 20 limits. Analysis is included in Reference 11.3-5.

Table 11.3-6

Release Point Data

Note: Refer to ODCM Table 3-13.

Table 11.3-7

Gaseous Waste System Release

		Gaseous Release Rate[a] (Ci/yr)							
Nuclide	Coolant Conc. (μCi/g)	Containment Building	Turbine Building	Reactor Building	Radwaste Building	Gland Seal	Air Ejector	Mechanical Vac Pump	Total
^{83m}Kr	1.200E-03	0.0	0.0	0.0	0.0	0.0	0.0	0.0	0.0
^{85m}Kr	2.000E-03	3.1E 00	7.1E 01	3.1E 00	0.0	0.0	2.1E 00	0.0	8.0E 01
^{85}Kr	6.300E-06	0.0	0.0	0.0	0.0	0.0	2.8E 02	0.0	2.8E 02
^{87}Kr	6.900E-03	3.1E 00	2.0E 02	3.1E 00	0.0	0.0	0.0	0.0	2.1E 02
^{88}Kr	6.900E-03	3.1E 00	2.4E 02	3.1E 00	0.0	0.0	0.0	0.0	2.4E 02
^{89}Kr	4.300E-02	0.0	0.0	0.0	0.0	0.0	0.0	0.0	0.0
^{131m}Xe	4.900E-06	0.0	0.0	0.0	0.0	0.0	5.2E 00	0.0	5.2E 00
^{133m}Xe	9.400E-05	0.0	0.0	0.0	0.0	0.0	0.0	0.0	0.0
^{133}Xe	2.700E-03	6.9E 01	2.9E 02	6.9E 01	1.0E 01	0.0	2.3E 01	2.3E 03	2.8E 03
^{135m}Xe	8.800E-04	4.8E 01	6.8E 02	4.8E 01	0.0	0.0	0.0	0.0	7.8E 02
^{135}Xe	7.600E-03	3.6E 01	6.6E 02	3.6E 01	4.5E 01	0.0	0.0	3.5E 02	1.1E 03
^{137}Xe	4.900E-02	0.0	0.0	0.0	0.0	0.0	0.0	0.0	0.0
^{138}Xe	2.900E-02	7.3E 00	1.5E 03	7.3E 00	0.0	0.0	0.0	0.0	1.5E 03
Total noble gases									7.0E 03
^{131}I	3.618E-03	1.8E-02	2.0E-01	1.8E-01	5.0E-02	0.0	0.0	3.0E-02	4.8E-01
^{133}I	1.549E-02	7.1E-02	8.0E-01	7.1E-01	1.8E-01	0.0	0.0	0.0	1.8E-00
Tritium gaseous release									7.1E 01

NOTE: 0.0 appearing in the table indicates release is less than 1.0 Ci/yr for noble gas, 0.0001 Ci/yr for iodine.

Table 11.3-7

Gaseous Waste System Release (Continued)

Nuclide	Containment Building	Turbine Building	Reactor Building	Radwaste Building	Mechanical Vac Building	Total
	Airborne Particulate Release Rate (Ci/yr)					
^{51}Cr	3.1E-06	1.4E-02	3.1E-04	9.4E-05	0.0	1.4E-02
^{54}Mn	3.1E-05	5.2E-04	3.1E-03	4.7E-04	0.0	4.3E-03
^{59}Fe	4.2E-06	5.2E-04	4.2E-04	1.6E-04	0.0	1.1E-03
^{58}Co	6.3E-06	6.3E-04	6.3E-04	4.7E-05	0.0	1.4E-03
^{60}Co	1.0E-04	2.1E-03	1.0E-02	9.4E-04	0.0	1.5E-02
^{65}Zn	2.1E-05	2.1E-04	2.1E-03	1.6E-05	0.0	2.3E-03
^{89}Sr	9.4E-07	6.3E-03	9.4E-05	4.7E-06	0.0	6.4E-03
^{90}Sr	5.2E-08	2.1E-05	5.2E-06	3.1E-06	0.0	2.9E-05
^{95}Zr	4.2E-06	1.0E-04	4.2E-04	5.2E-07	0.0	5.2E-04
^{124}Sb	2.1E-06	3.1E-04	2.1E-04	5.2E-07	0.0	5.2E-04
^{134}Cs	4.2E-05	3.1E-04	4.2E-03	4.7E-05	3.1E-06	4.6E-03
^{136}Cs	3.1E-06	5.2E-05	3.1E-04	4.7E-06	2.1E-06	3.8E-04
^{137}Cs	5.8E-05	6.3E-04	5.8E-03	9.4E-05	1.0E-05	6.6E-03
^{140}Ba	4.2E-06	1.1E-02	4.2E-04	1.0E-06	1.1E-05	1.1E-02
^{141}Ce	1.0E-06	6.3E-04	1.0E-04	6.3E-05	0.0	8.0E-04

[a] Estimated release based on GALE code evaluation.

Table 11.3-8

Building Volume and Ventilation Rates

Building	Free Air Volume (ft^3)	Ventilation Rate (cfm)
Secondary containment (reactor building)	3.5×10^6	80,000
Radwaste building	2.0×10^6	83,000
Turbine building	5.7×10^6	360,000
Primary containment (drywell)	2.0×10^5	10,500[a]
Primary containment (wetwell)	1.4×10^5	7,500[a]

[a] During primary containment purge only.

Table 11.3-9

Maximum Sector Annual Average Concentrations of Gaseous Radioactive Materials at the Original Restricted Area Boundary

Nuclide	Annual Average Release Rate (Ci/sec)	Boundary Concentration[a] ($\mu Ci/cm^3$)	Derived Air Concentration (DAC)[b] ($\mu Ci/cm^3$)	Concentration/ DAC
^{3}H	2.3 E-6	1.8 E-11	1 E-7	0.00018
^{85m}Kr	2.5 E-6	1.9 E-11	1 E-7	0.0002
^{85}Kr	9.0 E-6	6.9 E-11	7 E-7	0.000099
^{87}Kr	6.6 E-6	5.1 E-11	2 E-8	0.002
^{88}Kr	8.0 E-6	6.2 E-11	9 E-9	0.00069
^{131m}Xe	1.7 E-7	1.3 E-12	2 E-6	0.0000006
^{133}Xe	9.0 E-5	6.9 E-10	6 E-7	0.0011
^{135m}Xe	2.4 E-5	1.9 E-10	4 E-8	0.0047
^{135}Xe	3.7 E-5	2.8 E-10	7 E-8	0.0041
^{138}Xe	4.6 E-5	3.6 E-10	2 E-8	0.018
^{131}I	1.6 E-8	1.3 E-13	2 E-10	0.0006
^{133}I	5.7 E-8	4.4 E-13	1 E-9	0.00044
^{51}Cr	4.3 E-10	3.4 E-15	3 E-8	0.00000011
^{54}Mn	1.3 E-10	9.7 E-16	1 E-9	0.00000097
^{59}Fe	3.7 E-11	2.8 E-16	5 E-10	0.00000057
^{58}Co	4.3 E-11	3.4 E-16	1 E-9	0.00000034
^{60}Co	4.3 E-10	3.4 E-15	5 E-11	0.000067
^{65}Zn	7.3 E-11	5.7 E-16	4 E-10	0.0000015
^{89}Sr	2.0 E-10	1.6 E-15	1 E-9	0.0000016
^{90}Sr	9.3 E-13	7.2 E-18	6 E-12	0.0000013
^{95}Zr	1.7 E-11	1.3 E-16	4 E-10	0.0000003
^{124}Sb	1.7 E-11	1.3 E-16	3 E-10	0.0000004
^{134}Ca	1.5 E-10	1.1 E-15	2 E-10	0.0000058
^{136}Cs	1.1 E-11	8.9 E-17	9 E-10	0.000000099
^{137}Cs	2.1 E-10	1.6 E-15	2 E-10	0.0000079
^{140}Ba	3.7 E-10	2.8 E-15	2 E-9	0.0000015
^{141}Ce	2.5 E-11	1.9 E-16	1 E-9	0.00000019
			MPC	0.03

[a] χ/Q factor of 7.7×10^{-6} at 0.5 miles distance in SE sector used. No building wake factor included; meteorological data from 4/74 through 3/75.

[b] 10 CFR 20, Appendix B, to 20.1001-20.2401, Table II Column I.

Table 11.3-10

Frequency and Quantity of Steam Discharged to Suppression Pool

Event	Frequency Category	Quantity of Steam (lb/event)
1. RCIC test (monthly)	Moderate	29,000
2. RCIC test (vessel injection at startup)	Moderate	116,000
3. Inadvertent RCIC injection	Moderate	5,000
4. SRV test	Moderate	118,000
5. Inadvertent SRV opening	Moderate	118,000
6. Trip of both recirculation pumps	Moderate	260,000[a]
7. Turbine trip	Moderate	18,000
8. Generator load rejection	Moderate	18,000
9. Pressure regulator failure - open	Moderate	256,000[a]
10. Recirculation flow control failure - decreasing	Moderate	260,000[a]
11. Loss of all feedwater flow	Moderate	267,000[a]
12. Inadvertent closure - all MSIV	Moderate	271,000[a]
13. Loss of condenser vacuum	Moderate	291,000[a]
14. Feedwater control failure - maximum demand	Moderate	270,000[a]
15. Loss of auxiliary transformer	Moderate	251,000[a]
16. Loss of all grid connections	Moderate	280,000[a]
17. Turbine trip w/o bypass	Moderate	126,000[a]
18. Generator load rejection w/o bypass	Moderate	127,000[a]
19. Stuck open SRV	Moderate	817,000

Notes: Events 1, 2, and 3 based on steam flow quantity during test mode per RCIC system process diagram.
Events 4 and 5 assuming test and inadvertent opening at 1000 psi reactor pressure for 10 minutes.
Events 6 through 18 based on event description from Chapter 15.
Event 19 based on results from 251 Standard Plant Suppression Pool Response Analyses.

[a] Isolation event. It is assumed that SRV cycling is terminated at T = 30 minutes and reactor depressurization.

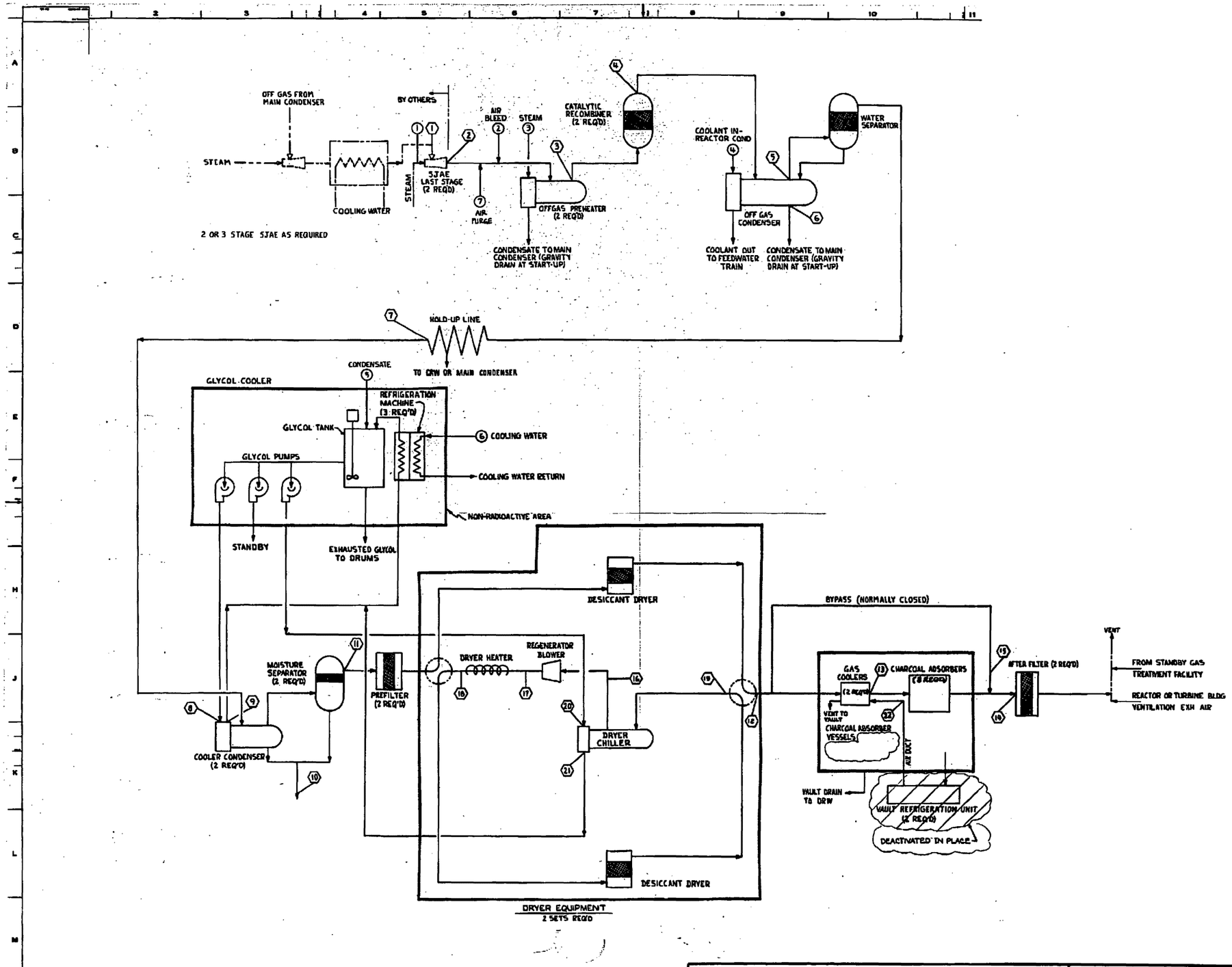

Columbia Generating Station Final Safety Analysis Report	Offgas System - Low Temperature		
	Draw. No. 02N64-04,6,1	Rev. 3	Figure 11.3-1

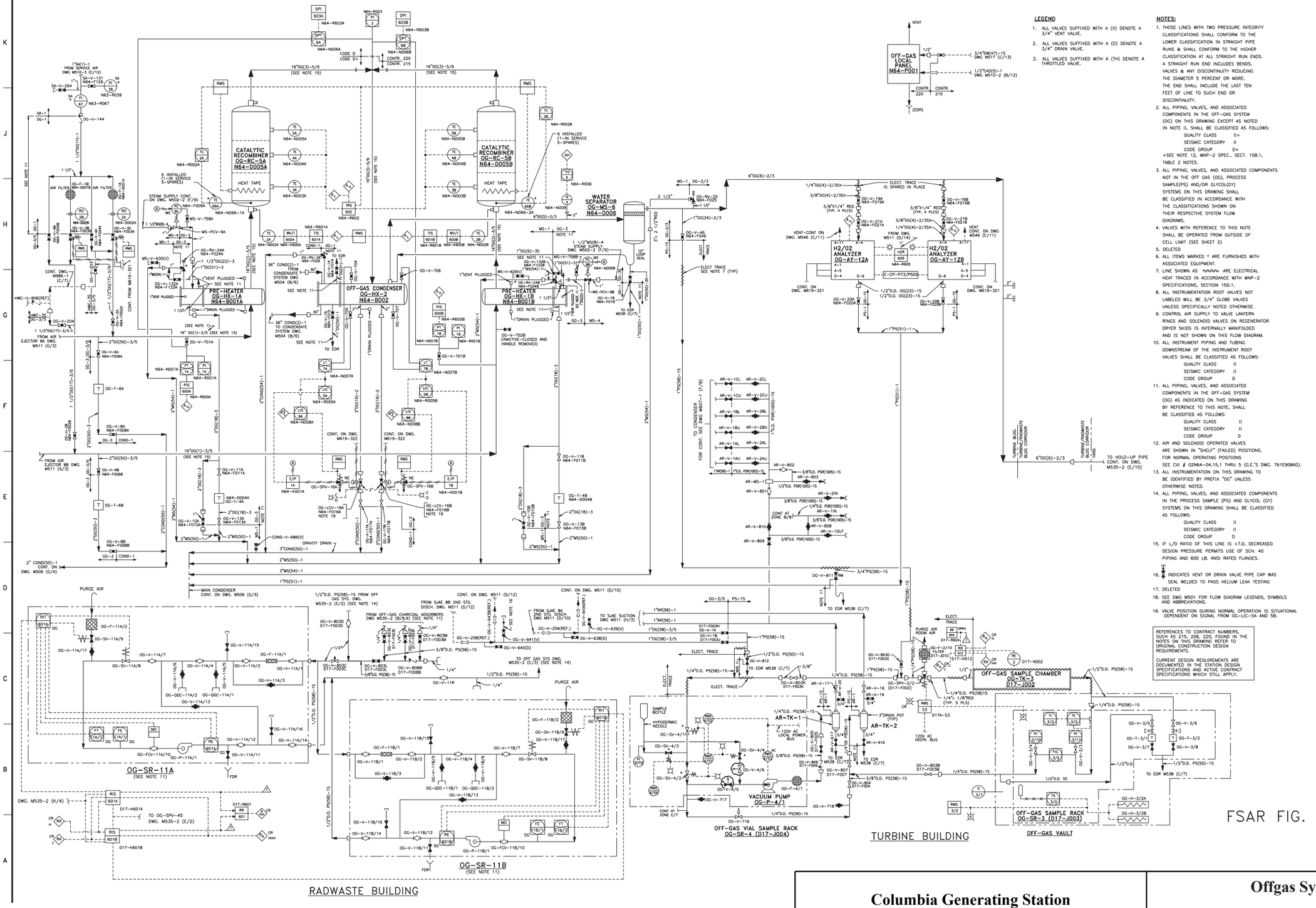

LEGEND

1. ALL VALVES SUFFIXED WITH A (V) DENOTE A 3/4" VENT VALVE.
2. ALL VALVES SUFFIXED WITH A (D) DENOTE A 3/4" DRAIN VALVE.
3. ALL VALVES SUFFIXED WITH A (TH) DENOTE A THROTTLED VALVE.

NOTES:

1. THOSE LINES WITH TWO PRESSURE INTEGRITY CLASSIFICATIONS SHALL CONFORM TO THE LOWER CLASSIFICATION IN STRAIGHT PIPE RUNS & SHALL CONFORM TO THE HIGHER CLASSIFICATION AT ALL STRAIGHT RUN ENDS. A STRAIGHT RUN END INCLUDES BENDS, VALVES & ANY DISCONTINUITY REDUCING THE DIAMETER 5 PERCENT OR MORE. THE END SHALL INCLUDE THE LAST TEN FEET OF LINE TO SUCH END OR DISCONTINUITY.
2. ALL PIPING, VALVES, AND ASSOCIATED COMPONENTS IN THE OFF-GAS SYSTEM (OG) ON THIS DRAWING EXCEPT AS NOTED IN NOTE 11, SHALL BE CLASSIFIED AS FOLLOWS:
   QUALITY CLASS II+
   SEISMIC CATEGORY II
   CODE GROUP D+
   +SEE NOTE 12, WNP-2 SPEC., SECT. 15B.1, TABLE 2 NOTES.
3. ALL PIPING, VALVES, AND ASSOCIATED COMPONENTS NOT IN THE OFF GAS (OG), PROCESS SAMPLE(PS) AND/OR GLYCOL(GY) SYSTEMS ON THIS DRAWING SHALL BE CLASSIFIED IN ACCORDANCE WITH THE CLASSIFICATIONS SHOWN ON THEIR RESPECTIVE SYSTEM FLOW DIAGRAMS.
4. VALVES WITH REFERENCE TO THIS NOTE SHALL BE OPERATED FROM OUTSIDE OF CELL LIMIT (SEE SHEET 2)
5. DELETED
6. ALL ITEMS MARKED * ARE FURNISHED WITH ASSOCIATED EQUIPMENT.
7. LINE SHOWN AS ∿∿∿ ARE ELECTRICAL HEAT TRACED IN ACCORDANCE WITH WNP-2 SPECIFICATIONS, SECTION 150.1.
8. ALL INSTRUMENTATION ROOT VALVES NOT LABELED WILL BE 3/4" GLOBE VALVES UNLESS SPECIFICALLY NOTED OTHERWISE.
9. CONTROL AIR SUPPLY TO VALVE LANTERN RINGS AND SOLENOID VALVES ON REGENERATOR DRYER SKIDS IS INTERNALLY MANIFOLDED AND IS NOT SHOWN ON THIS FLOW DIAGRAM.
10. ALL INSTRUMENT PIPING AND TUBING DOWNSTREAM OF THE INSTRUMENT ROOT VALVES SHALL BE CLASSIFIED AS FOLLOWS:
    QUALITY CLASS II
    SEISMIC CATEGORY II
    CODE GROUP D
11. ALL PIPING, VALVES, AND ASSOCIATED COMPONENTS IN THE OFF-GAS SYSTEM (OG) AS INDICATED ON THIS DRAWING BY REFERENCE TO THIS NOTE, SHALL BE CLASSIFIED AS FOLLOWS:
    QUALITY CLASS II
    SEISMIC CATEGORY II
    CODE GROUP D
12. AIR AND SOLENOID OPERATED VALVES ARE SHOWN IN "SHELF" (FAILED) POSITIONS. FOR NORMAL OPERATING POSITIONS SEE CVI # 02N64-04,15,1 THRU 5 (G.E.'S DWG. 761E908AD).
13. ALL INSTRUMENTATION ON THIS DRAWING TO BE IDENTIFIED BY PREFIX "OG" UNLESS OTHERWISE NOTED.
14. ALL PIPING, VALVES, AND ASSOCIATED COMPONENTS IN THE PROCESS SAMPLE (PS) AND GLYCOL (GY) SYSTEMS ON THIS DRAWING SHALL BE CLASSIFIED AS FOLLOWS:
    QUALITY CLASS II
    SEISMIC CATEGORY II
    CODE GROUP D
15. IF L/D RATIO OF THIS LINE IS <7.0, DECREASED DESIGN PRESSURE PERMITS USE OF SCH. 40 PIPING AND 600 LB. ANSI RATED FLANGES.
16. ▲ INDICATES VENT OR DRAIN VALVE PIPE CAP WAS SEAL WELDED TO PASS HELIUM LEAK TESTING
17. DELETED
18. SEE DWG M501 FOR FLOW DIAGRAM LEGENDS, SYMBOLS AND ABBREVIATIONS.
19. VALVE POSITION DURING NORMAL OPERATION IS SITUATIONAL DEPENDENT ON SIGNAL FROM OG-LIC-5A AND 5B.

REFERENCES TO CONTRACT NUMBERS, SUCH AS 215, 206, 220, FOUND IN THE NOTES ON THIS DRAWING REFER TO ORIGINAL CONSTRUCTION DESIGN REQUIREMENTS.

CURRENT DESIGN REQUIREMENTS ARE DOCUMENTED IN THE STATION DESIGN SPECIFICATIONS AND ACTIVE CONTRACT SPECIFICATIONS WHICH STILL APPLY.

FSAR FIG.

Columbia Generating Station
Final Safety Analysis Report

Offgas System P&ID

Draw. No. M535-1	Rev. 88	Figure 11.3-2.1

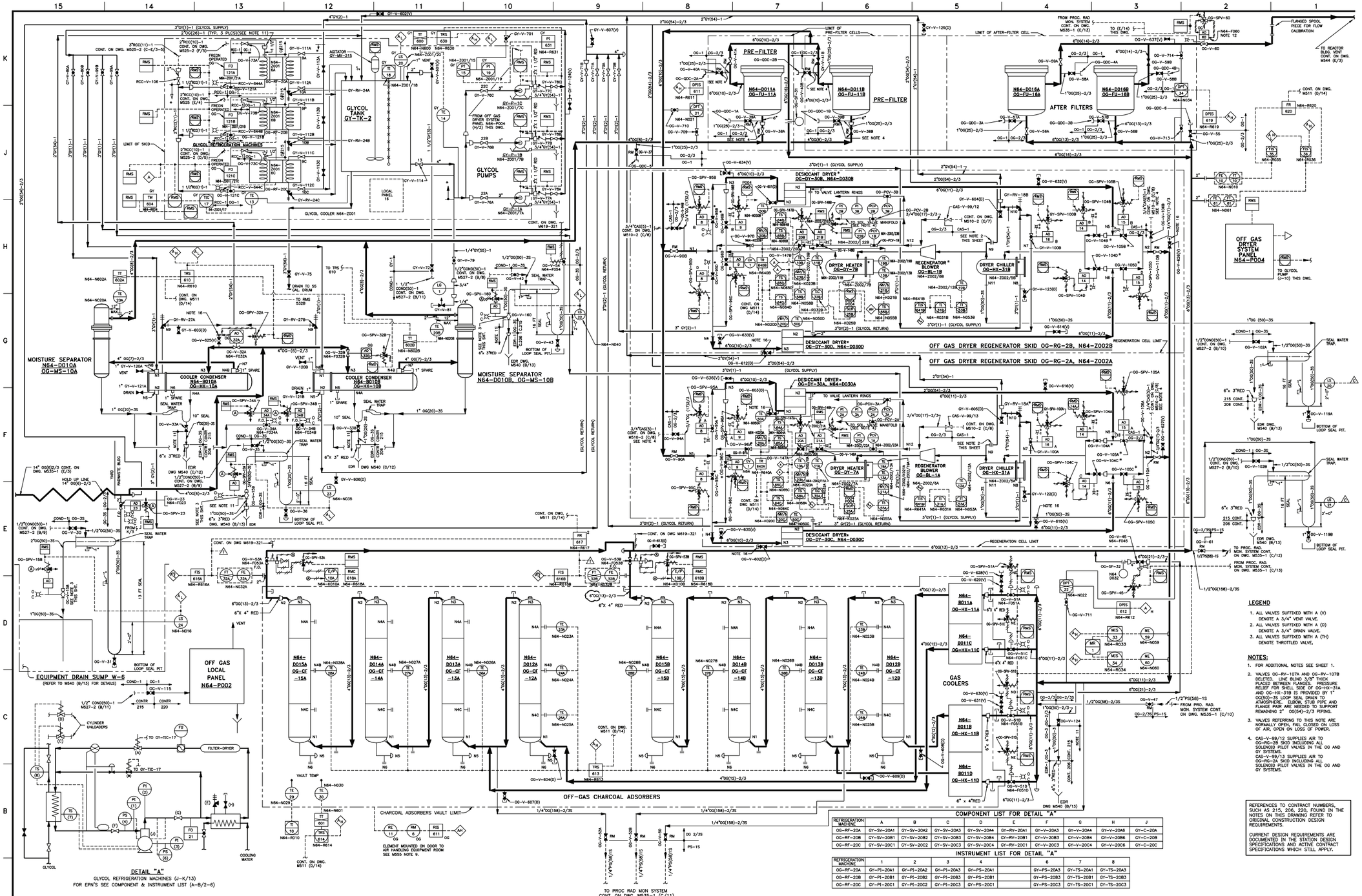

COMPONENT LIST FOR DETAIL "A"

REFRIGERATION MACHINE	A	B	C	D	E	F	G	H	J
OG-RF-20A	GY-SV-20A1	GY-SV-20A2	GY-SV-20A3	GY-SV-20A4	GY-RV-20A1	GY-V-20A3	GY-V-20A4	GY-V-20A6	GY-C-20A
OG-RF-20B	GY-SV-20B1	GY-SV-20B2	GY-SV-20B3	GY-SV-20B4	GY-RV-20B1	GY-V-20B3	GY-V-20B4	GY-V-20B6	GY-C-20B
OG-RF-20C	GY-SV-20C1	GY-SV-20C2	GY-SV-20C3	GY-SV-20C4	GY-RV-20C1	GY-V-20C3	GY-V-20C4	GY-V-20C6	GY-C-20C

INSTRUMENT LIST FOR DETAIL "A"

REFRIGERATION MACHINE	1	2	3	4		6	7	8
OG-RF-20A	GY-PI-20A1	GY-PI-20A2	GY-PI-20A3	GY-PS-20A1		GY-PS-20A3	GY-TS-20A1	GY-TS-20A3
OG-RF-20B	GY-PI-20B1	GY-PI-20B2	GY-PI-20B3	GY-PS-20B1		GY-PS-20B3	GY-TS-20B1	GY-TS-20B3
OG-RF-20C	GY-PI-20C1	GY-PI-20C2	GY-PI-20C3	GY-PS-20C1		GY-PS-20C3	GY-TS-20C1	GY-TS-20C3

LEGEND

1. ALL VALVES SUFFIXED WITH A (V) DENOTE A 3/4" VENT VALVE.
2. ALL VALVES SUFFIXED WITH A (D) DENOTE A 3/4" DRAIN VALVE.
3. ALL VALVES SUFFIXED WITH A (TH) DENOTE THROTTLED VALVE.

NOTES:

1. FOR ADDITIONAL NOTES SEE SHEET 1.
2. VALVES OG-RV-107A AND OG-RV-107B DELETED. LINE BLIND 3/8" THICK PLACED BETWEEN FLANGES. PRESSURE RELIEF FOR SHELL SIDE OF OG-HX-31A AND OG-HX-31B IS PROVIDED BY 1" OG(50)-3S LOOP SEAL DRAIN TO ATMOSPHERE. ELBOW, STUB PIPE AND FLANGE PAIR ARE NEEDED TO SUPPORT REMAINING 2" OG(54)-2/3 PIPING.
3. VALVES REFERRING TO THIS NOTE ARE NORMALLY OPEN, FAIL CLOSED ON LOSS OF AIR, OPEN ON LOSS OF POWER.
4. CAS-V-99/12 SUPPLIES AIR TO OG-RG-2B SKID INCLUDING ALL SOLENOID PILOT VALVES IN THE OG AND GY SYSTEMS.
   CAS-V-99/13 SUPPLIES AIR TO OG-RG-2A SKID INCLUDING ALL SOLENOID PILOT VALVES IN THE OG AND GY SYSTEMS.

REFERENCES TO CONTRACT NUMBERS, SUCH AS 215, 206, 220, FOUND IN THE NOTES ON THIS DRAWING REFER TO ORIGINAL CONSTRUCTION DESIGN REQUIREMENTS.

CURRENT DESIGN REQUIREMENTS ARE DOCUMENTED IN THE STATION DESIGN SPECIFICATIONS AND ACTIVE CONTRACT SPECIFICATIONS WHICH STILL APPLY.

Columbia Generating Station
Final Safety Analysis Report

Offgas System P&ID

Draw. No. M535-2	Rev. 72	Figure 11.3-2.2

11.4 SOLID WASTE MANAGEMENT SYSTEM

11.4.1 DESIGN BASIS

Power plant operation results in various solid radioactive wastes that require disposal. These wastes can be in the form of wet solids, such as powdered ion exchange resins from filter demineralizers, expended bead resins from deep bed demineralizers, small quantities of miscellaneous liquid, and miscellaneous dry materials such as paper, rags, plastic, and laboratory wastes.

The objective of the solid waste management system is to collect, monitor, process, and package these waste products in a suitable form for offsite shipment and burial. In designing the system to meet the stated objective, the following criteria were applied:

The system has the capacity to handle the volumes of waste from normal operations and anticipated operational occurrences. The expected annual volumes of wet solid wastes are shown in Table 11.4-1.

The system is designed to process the quantity of waste and concentration of radionuclides listed in Table 11.4-3 while maintaining occupational exposure as low as is reasonably achievable (ALARA). This is done by controlling the pipe run locations for shielding and exposure considerations, placing the process equipment in shielded areas, by providing remote operating stations, and by performing dewatering operations in radiation shields if required. The radwaste building shielding is designed for the highest radioactivity source, reactor water cleanup (RWCU) resins. The equipment layout is shown in general arrangement drawings in Section 1.2. Table 11.4-2 lists capacities, design pressure, and design temperature of the major equipment.

In keeping with the ALARA philosophy and Appendix I to 10 CFR 50, the solid waste management system's contribution to offsite doses is minimized by filtration and by directing the ventilation air flow from areas of low airborne contamination to areas of higher airborne contamination. The filtered ventilation radioactive releases are discussed in Section 11.3.

The solid waste management system operations and procedures are designed to limit the dose to offsite persons from station operations to significantly less than the limits specified in 10 CFR Part 20. Water separated in processing is returned to the liquid waste management system for treatment as described in Section 11.2.2.1 and shown in Figure 11.2-1.

The system can accommodate a variety of shipping container sizes and shapes with and without shields. Provisions are made for the detection and removal of loose surface contamination on the waste containers. The radiation levels of the waste containers are monitored so that

provisions can be made to ensure that shipping regulation radiation levels are not exceeded. Compliance with applicable regulations, e.g., 10 CFR Parts 61 and 71 and 49 CFR is discussed in Sections 11.4.2.9 and 11.4.3.

The safety class, quality group classification, quality class, and seismic category of radwaste systems are specified in Table 3.2-1. The solid waste management system is not designed to Seismic Category I. It is located in the Seismic Category I portion of the radwaste building. The seismic classification of the radwaste building is discussed in Section 3.8.4.1.2.

See Section 3.1.2.6.4 for a discussion of systems provided to meet General Design Criterion 63.

11.4.2 SYSTEM DESCRIPTION

A portable solid waste management system is used by Columbia Generating Station (CGS), as described in the following subsections.

It is required by 10 CFR 61 that, if certain activity criteria are exceeded, wet solid wastes be stabilized by solidification or processed to remove free standing liquids with containment in high integrity containers (HICs). The HICs may provide stability alone or in conjunction with an engineered barrier at the disposal site. The presently installed plant system is designed to interface with the portable dewatering/drying system which, when coupled with HICs, meet the requirements for stabilization in compliance with 10 CFR 61.

There are two resin dewatering systems used at CGS: the Self-Engaging Rapid Dewatering System (SERDS) and the Self Engaging Dewatering System (SEDS). The resin dewatering systems are vendor provided with NRC approved topical reports (RDS-25506-01-NP, Revision 1 for the SERDS and CNSI-DW-11118-01-P for the SEDS), and the systems are operated according to the technical requirements of this report. The types and quantities of waste to be processed are described below. The NRC licensed shipping casks and associated liners are used for processing, transporting, and disposing of wet solid wastes when required.

System operation is closely monitored by Energy Northwest personnel. If a vendor operates the dewatering system, the vendor will be required to submit their operating procedures for Energy Northwest review and approval. The vendor procedures will either be incorporated into a CGS procedure or will be approved “as is” by CGS prior to use.

Dewatering of resins to meet applicable dewatering criteria is conducted in accordance with approved procedures inside the radwaste building in the liner storage area or in shipping casks on trucks, where any spills are routed to existing floor drain sumps and the building ventilation filtration system ensures no unfiltered airborne releases occur from dewatering activities.

11.4.2.1 General

The sources of the various radioactive wet resin waste inputs to the system are shown in Figure 11.2-1. Table 11.2-11 shows the design basis expected frequency of input, the quantities of solids generated, the radioactivity level of the solids after accumulation, and the volume of liquid used in sluicing accumulated solids to the processing equipment. The excess liquid is subsequently returned to the liquid waste management system.

These values are based on experience from operational BWR nuclear power stations. Figure 11.4-1 shows the solid waste management system up to and including the portable portion of the system described in the vendor's topical reports. The phase separation and concentration portions of the system are shown on Figures 5.4-22, 10.4-5, 11.2-2, and 11.2-3. Tanks containing radioactive waste are provided with overflow connections which direct any overflow to drain sumps.

The solid waste processing areas are located in the radwaste building, where wet and dry solid wastes may be processed. Wet solid wastes include backwash resin from the RWCU system, the condensate filter demineralizer system, the fuel pool filter demineralizers, the floor drain and equipment drain filter demineralizers, and spent resin from the floor drain demineralizer and the waste demineralizer. Dry solid wastes include items such as rags, paper, plastics, small equipment parts, and laboratory wastes.

11.4.2.2 Radwaste Disposal System For Reactor Water Cleanup Resin

The backwash discharge from the cleanup filter demineralizers is collected and concentrated in two 4500-gal cleanup phase separators which are located below the cleanup demineralizers in the radwaste building. After several backwashes are accumulated, the waste is transferred to the portable dewatering system.

The cleanup phase separators are designed to concentrate the resin from 0.5% by weight solids to approximately 5% by weight solids by sedimentation and decantation of the slurry. While the working separator is filling, the other previously filled tank is held isolated to the extent practicable to allow for additional decay of resin activity.

After each backwash batch is received by the working separator, the batch is allowed to settle for a period of time and the decantate is then transferred by pumping to the waste collector tank. When sufficient resin has accumulated, the working separator is isolated and allowed to stand for a period to permit radioactive decay. At the end of this decay period the sludge is fluidized to approximately 5% weight solids and transferred by pumping to the portable dewatering system.

11.4.2.3 Radwaste Disposal System For Condensate Demineralizer Resin

The backwash discharge from the condensate filter demineralizers is collected in the condensate backwash receiving tank which is located below the condensate filter demineralizers in the radwaste building. After collection, the waste is transferred by pumping to one of the two condensate phase separators for processing.

Operation of the condensate phase separators is similar to that for the cleanup phase separators. Backwash resin is received at 0.5% by weight solids and concentrated to approximately 5% by weight solids, allowed to stand for a period of radioactive decay and then decanted and transferred by pumping to the portable dewatering system.

11.4.2.4 Radwaste Disposal System For Fuel Pool, Floor Drain, and Waste Collector Filter Resin

Backwash resin wastes from the fuel pool filter demineralizers, floor drain, and waste collector filter demineralizers are backwashed to the waste sludge phase separator tank. The waste sludge phase separator is designed to concentrate the resin from 0.5% by weight solids to approximately 5% by weight solids by sedimentation and decantation.

After each backwash batch is received by the separator, it is allowed to settle for a period of time and the decantate is then transferred by pumping to the floor drain collector tank.

When an appropriate quantity of resin is accumulated, the resin is fluidized to approximately 5% by weight solids and transferred by pumping to the portable dewatering system.

11.4.2.5 Radwaste Disposal System For Spent Resin

Spent bead resins from the floor and equipment drain polishing demineralizers are hydropneumatically transferred to the spent resin tank. The tank is designed to retain one batch of resins plus resin transfer water plus freeboard.

The decay time of any single batch is governed by the need to make the spent resin tank available to receive a subsequent batch from an alternate demineralizer. The frequency of spent resin discharge from the floor and equipment drain polishing demineralizers is estimated to be about once every 2 months. Each batch of the spent resin is transferred at approximately 40% by weight solids to the portable dewatering system.

11.4.2.6 Resin Container Handling and Storage

Filled containers from the dewatering operation in the container storage area are lifted by a crane and placed on a track-riding dolly. The dolly moves the containers from the storage area to the loading area where another crane lifts the container onto the truck for offsite shipment.

Alternatively, the dewatering operation for high activity resin waste can be performed in a cask on or off the truck bed. General locations and arrangements are shown in Figure 1.2-13.

11.4.2.7 Miscellaneous Dry Solid Waste System

Dry active waste may consist of air filtration media, miscellaneous paper, plastic and rags from contaminated areas, contaminated clothing, tools and equipment parts which cannot be effectively decontaminated, solid laboratory wastes, and other similar materials. The radioactivity of much of this waste is low enough to permit handling by contact. Compressible wastes may be compacted into metal containers to reduce their volumes. Alternately, container vans (C-vans) or other containers suitable for shipment may be used for dry radioactive waste shipped to a vendor for volume reduction services.

A relatively small quantity of high activity compactable and noncompactable dry active radioactive waste (DAW) may be loaded into the open top or encapsulation liners. Other containers whose geometry is compatible with shipment in shielded shipping casks may be used.

A locally controlled compactor system, if used, will include the following features: hydraulic pump with motor, hydraulic oil storage, high-efficiency filters, fan, and accessories. Ventilation air will be pulled across the top of the containers and then through high-efficiency filters by a fan during the compression process and exhausted to the radwaste building exhaust system described in Section 9.4.

Solid wastes and other nonliquid radioactive material and C-vans may be stored temporarily near the truck loading area outside the radwaste building, on the outdoor curbed pad adjacent to the radwaste building, or other suitable location. Noncompressible solid wastes are packaged in containers suitable for the waste. Low activity waste can be stored until enough is accumulated to permit economical transportation to an offsite disposal site or to a vendor for volume reduction of the waste prior to disposal.

Irradiated reactor components consisting of spent control rod blades, fuel channels, in-core ion chambers, and other equipment are stored in the spent fuel storage pool to allow for radioactive decay prior to shipment.

The packaging of dry solid wastes will be administratively controlled to ensure the 10 CFR 61 and/or burial facility free standing liquid criteria are met.

11.4.2.8 Expected Volumes

The design basis expected frequency of solids input, the quantities of solids generated, and the radioactivity of the solids after accumulation are shown in Table 11.2-11. Table 11.4-3 shows the expected solids production rate and significant nuclides associated with each batch of

dewatered waste. The distribution of these nuclides (dependent on the concentration in the reactor water) corresponds to the design basis offgas noble gas release rate as described in Section 11.3.1.

Table 11.4-1, excluding dry and compacted waste, shows the expected annual container production of solid wastes based on the process diagram data inputs. No decay after container filling operations has been considered.

11.4.2.9 Packaging

Radioactive wastes are packaged and shipped from CGS in containers that meet the requirements established in 49 CFR 171-180 for the Department of Transportation and 10 CFR 71 for the NRC.

Packaging of wastes being dewatered is typically performed remotely behind shielding as described below. Empty containers may be brought into the processing area using the dolly and filled with waste for processing. The quantity of wastes packaged in the container is controlled by operating procedures.

Dewatered liners are capped, surveyed for surface contamination, and decontaminated as necessary prior to shipment.

11.4.2.10 Storage Facilities

The general arrangement drawings in Section 1.2 show the layout of the radwaste handling areas in the radwaste building.

For the liners presently in use (of up to 210 ft^3 capacity), the storage area can accommodate about 15 filled liners. High activity containers can be stored to allow for 6 months decay prior to shipment if necessary. It is expected, however, that most radwaste containers will be shipped within 1 to 3 months of generation.

11.4.2.11 Shipment

The following describes a typical loading sequence for liners: A truck containing the cask is moved into the truck loading area. The dolly is moved to the storage area loading station and a capped container of waste is placed on the dolly by the storage area crane. The dolly is moved back to the truck loading area where the liner is lifted into the cask, and the cask lid is placed on the cask. The cask is decontaminated if necessary for shipment. Similar operations are performed when loading unshielded containers onto the truck. Dewatering of high activity wastes can also be performed in liners “in cask” in place on the shipping truck.

Any unshielded containers found to have external contamination exceeding 49 CFR limits are decontaminated. Further smear tests and cleaning are carried out as required until the activity on the container is within acceptable limits.

Radwaste tank failure and spent fuel cask drop incidents are discussed in Sections 15.7.3 and 15.7.5, respectively.

11.4.2.12 Process Monitoring

Process monitoring is performed by the dewatering system operator and the operator in the radwaste control room. They are in communication during waste transfer to the dewatering system. The dewatering system processing is monitored by remote closed-circuit TV cameras and other instrumentation as described in the topical reports for the process.

Each RWCU phase separator is equipped with one level indicating device for total liquid level. The total liquid level indicator utilizes an air bubbler and a pressure sensing level transmitter which drives a 0-100% level gauge and a high-level alarm in the radwaste control room. The level transmitter also drives a level indicator on the local control panel and provides control functions for the decant pump, the resin discharge pump, and the phase separator inlet selector valve.

The waste sludge phase separator has total liquid level indication. It uses an air bubbler and a pressure-sensing level transmitter. In addition to the level gauge and high-level alarm in the radwaste control room, the level transmitter provides control inputs to the decant pump, the stop and flush circuit on the sludge discharge pump, and the discharge valves from the waste collector and floor drain collector tanks to the waste sludge phase separator.

The condensate phase separators level instrumentation is the same as that described for the RWCU phase separators. Level indication for the spent resin tank is essentially the same as that described for the RWCU phase separators. The concentrated waste measuring and waste mixing tanks are not in service.

11.4.3 PROCESS CONTROL PROGRAM

11.4.3.1 Objective

The objectives of the process control program are to characterize and classify radwaste and ensure the complete solidification of all wet wastes being solidified and to ensure that dewatered wet wastes and disposal packages meet the free standing liquid and stability requirements of 10 CFR 61. To meet these objectives, the process control program has incorporated the recommendations set forth in NUREG-0800 and Branch Technical Position - ETSB 11-3.

11.4.3.2 Process Control Program

To ensure that acceptable waste forms are produced for disposal in compliance with the requirements in 10 CFR 61, the process control program provides for characterization of individual waste streams, classification of final waste products, proper disposal packaging, and verification that waste dewatering and/or solidification has been successful. In addition, nonstable waste form processing, waste storage, handling, and transportation activities take place under the process control program to ensure compliance with all applicable regulations in 10 CFR Parts 20, 61, and 71.

Stability of waste form at Columbia Generating Station is normally achieved through the combined properties of dewatered media and HICs or HICs plus engineered barriers. If solidification for stability is performed at Columbia Generating Station, it will be done in accordance with approved procedures to meet applicable disposal site license conditions and other applicable requirements.

Other processing methods such as portable deionization, solidification for nonstable waste form, evaporation, filtration, etc., may be used to process nonhazardous radioactively contaminated liquids. If these activities will result in the disposal of waste at a licensed burial site, they will be conducted in accordance with approved procedures to ensure that applicable disposal site license conditions and other requirements are met. Solidification agents listed in the burial facility license may be used to ensure free-standing liquid criteria are achieved.

The process control program contains the current formulas, sampling, analyses, test, and determinations to be made to ensure that processing and packaging of solid radioactive wastes based on demonstrated processing of actual or simulated wet solid wastes will be accomplished in such a way as to ensure compliance with 10 CFR Parts 20, 61, and 71, state regulations, burial ground requirements, and other requirements governing the disposal of solid radioactive wastes.

Changes to the process control program are documented, and records of reviews performed are retained for the duration of the operating license. This documentation contains sufficient information to support the change together with the appropriate analyses or evaluations justifying the change and a determination that the change will maintain the overall conformance of the solidified waste product to the existing requirements of federal, state, and other applicable regulations. Changes become effective after review and acceptance in accordance with the Operational Quality Assurance Program Description (OQAPD).

The radioactive waste process control program incorporates the following elements:

a. Waste stream descriptions,
b. Process controls,
c. Characterization,

d. Processing and stabilization,
e. Sampling,
f. Scaling factors,
g. Classification,
h. Computer code usage,
i. Analytical methods,
j. Packaging,
k. ALARA,
l. Shipping,
m. Documentation,
n. Equipment maintenance and calibration,
o. Minimization and segregation,
p. Storage,
q. Trending, and
r. Reporting.

Plant procedures implement the process control program.

11.4.3.3 Process Control Systems

The transfer of wet solid wastes to the processing system is monitored and controlled from the process control panel in the radwaste control room. The resin transfer system interfaces with the portable dewatering system at the point of connection with the dewatering equipment.

At the interface point, the applicable dewatering system is operated per the technical requirements of the NRC-approved topical report and is designed to ensure that processed waste in conjunction with the dewatering HIC or liner is prepared for burial and meets the 10 CFR Part 61 criteria. The process control program is described and controlled by procedure. The dewatering systems control panels are in a remote location shielded from the waste processing resin containing components. It is designed for automatic operation and provides indication and alarm for liner level, temperature, pressure, and other operating parameters.

If a waste processing vendor is used, they are monitored by Energy Northwest to ensure that applicable procedures, Energy Northwest or vendor, are being followed and that an acceptable end product is formed as described in the procedure used.

11.4.3.4 Waste Characterization

The wet wastes at CGS to be processed are characterized in individual streams for RWCU resins, equipment drain radioactive (EDR) and floor drain radioactive (FDR) powdered resins, EDR and FDR bead resins, and condensate resins. The four major systems producing wastes are described below.

a. Floor drain system - Wastes from the turbine building, reactor building, and radwaste building floor drain sumps are routinely monitored and collected for processing in the floor drain collector tank. The floor drain filter and demineralizer sludges are combined with equipment drain filters and sludges to form a mixture which is sampled prior to processing. Similarly, the EDR/FDR bead (polishing) resins are also sampled prior to processing.

b. Equipment drain system - Wastes from the turbine building, reactor building, and radwaste building equipment drain sumps are routinely monitored and collected in the waste collector tank. Sludges and resins from the high purity filter demineralizers are sampled prior to processing as described above in the FDR system description.

c. Condensate filter demineralizer system - The condensate polishing filter demineralizers use pressure precoated ion exchange media filters. Resins are sampled prior to processing.

d. Reactor water cleanup filter demineralizer system - The RWCU filter demineralizers use pressure precoated ion exchange media filters. Resins are sampled prior to processing.

Accumulations in collection tanks and phase separators will be tracked to aid in determining processing schedules and potential problems in system operation by tracking volumes. Selected coolant isotopic concentrations are trended to provide early indication of changes important to waste classification.

The waste streams in the foregoing systems are characterized by a periodic sampling and analysis program that establishes plant-specific isotopic correlation factors and relationships for inferring concentrations (i.e., scaling factors) of all 10 CFR 61 nuclides from easy to measure gamma-emitting species.

Individual waste stream activities and concentrations are determined for each batch prior to shipment for disposal. The evaluation of historical evidence is used as a screen to determine the appropriate disposal container followed by a formal evaluation based on actual samples or dose to curie determinations as appropriate.

11.4.3.5 Processing Methods (Wet Wastes)

The dewatering units are portable systems containing all necessary equipment and controls for removing the free water from ion-exchange resins and filter media.

Containers used for dewatering are furnished to CGS with factory installed "internals" functionally identical to those used during qualification testing. The determination of "functionally identical" may be performed by the vendor in accordance with their NRC approved Quality Assurance program or by CGS in accordance with the Quality Assurance program. The internals are free-standing and self-supporting, without protuberances which might damage the container. A fill head interfaces with the container and liner dewatering internals. The dewatering equipment is operated using the labeled controls on the control panel.

The resins that are below the Class A limits of 10 CFR 61 are normally dewatered in carbon steel containers. Resins exceeding Class A limit are dewatered in HICs to provide waste form stability.

The RDS process includes use of moisture indicators and the SEDS process uses dewatering verification to verify that free liquid criteria are met.

11.4.3.6 Control Instrumentation and Sampling Program

Processing of radwaste at CGS is conducted using instrumentation and controls for each batch to ensure that (a) suitable, well characterized waste is delivered to the various waste processing subsystems, (b) adequate process control information is provided to system operators to ensure adherence to proper operating parameter limits, such as tank levels, flow rates, release concentrations, etc., and (c) sufficient information is available to limit personnel exposures in conformance with the ALARA program.

The control instrumentation used at CGS includes in-process instruments, as well as portable radiation monitoring instruments.

The sampling program at CGS is a twofold program. Individual waste streams are characterized and classified by CGS personnel with the responsibility for shipping radioactive waste. Additionally, samples are sent to an offsite laboratory on a periodic basis to validate scaling factors.

11.4.3.7 Maintenance and Calibration

The control of the waste processing system is ensured by a thorough preventative and corrective maintenance program described in plant procedures for scheduled maintenance systems and maintenance work requests.

The control instrumentation is an integral part of the process system. The instruments providing the controlling functions are calibrated on a predetermined schedule and after each maintenance activity as applicable.

The periodic verification of calibration or recalibration assures that the process control program associated instruments are maintained and that conditions within the system are known.

The maintenance and calibration activities are performed in accordance with written procedures.

11.4.3.8 Waste Processing System Capacity

Wastes can be dewatered in up to 210 ft^3 liners in approximately 8 to 12 hr. This gives two shift operation a processing capacity of at least 100,000 ft^3 of waste per year. Similar processing capacity is available from portable solidification equipment which could be moved onsite if solidification to provide stabilization became necessary.

Dry wastes are segregated and monitored to reduce volumes where practicable. The expected design basis volume of radwaste is approximately 20,000 ft^3/year, however, actual volumes have been reduced to less than 10,000 ft^3/year. Forced outages and refueling outages increase volume but can be limited by preplanning material usage.

The radwaste processing capacity at CGS is sized to provide the needed capacity for anticipated occurrences and normal operation. This includes wet wastes, liquids, and solid wastes. Table 11.4-1 lists some of the major flowrates and capacities for several of the waste processes. Table 11.4-2 tabulates the major equipment items in the permanently installed waste processes.

11.4.3.9 Waste Storage Capacity

The storage capacity for DAW is adequate due to containerization allowing outside storage prior to shipping.

For the liners currently in use (up to 210 ft^3 capacity), approximately 15 liners can be readily accommodated. This storage space is available for the portable waste processing system and to store processed liners. Sufficient casks and transport packages have been factored into the planning to allow shipment of processed radwaste at a rate to preclude storage problems.

11.4.3.10 Compliance With ALARA Principles

a. Facility layout for the portable dewatering equipment - The portable dewatering systems are designed to meet Regulatory Guide 8.8. The waste container filling, capping, and decontamination operations are either performed remotely from a control area or as quickly as possible to minimize exposures. The system operator can view container filling and processing operations using a television monitoring system to prevent overfilling the waste container.

The portable system is located to limit the exposure of personnel to high dose rate piping and is designed to minimize the accumulation of crud deposits in the system. Piping and pumps are designed to allow complete flushing and, when possible, piping is flushed prior to maintenance. The control area is located in a relatively low radiation area away from the dewatering operation. Equipment with clean components is segregated from the areas containing waste except in the processing area. This allows maintenance on non-contaminated equipment to be performed in low radiation areas.

The placement of the portable processing system was determined based on criteria from Regulatory Guide 8.8 on ALARA and quality assurance provisions from Regulatory Guide 1.143. Processing radiation shields, in-cask processing and/or careful planning of processing activities contribute to efforts to minimize exposures from radwaste system operations.

b. Plant layout for ALARA - The installed radwaste processing system (excluding the portable dewatering system) was designed for remote operation from the radwaste control room in the 467-ft elevation of the radwaste building. The control room is designed with visual aids mimicking the processes being controlled. This allows for visual indication of processing status.

c. Exposure control - The radwaste operators control the processing of radioactive waste from the radwaste control room that is located in a low radiation area.

Most radwaste processing system components and systems can be remotely aligned from the radwaste control room without going into the radiation areas. This allows flexibility of operation and ensures processing capacity is maintained with reduced exposure to personnel. The systems and components can be flushed remotely from the control room reducing radiation levels for maintenance activities, also helping meet the ALARA concept.

The installed systems at CGS are sized with the capacity to process peak volumes of waste to reduce the effluents offsite, meeting criteria of 10 CFR 50, Appendix I.

The processing control from a remote control room and the ability to process all waste streams meets the intent of ALARA for both onsite and offsite.

11.4.3.11 Unanticipated Wastes

The waste streams at CGS have been characterized for normal expected waste components. Periodically, there may be waste produced from operations such as decontamination or cleaning that have not been characterized.

These wastes are classified and processed for disposal based on the practical experience of the CGS staff. It is unlikely that any wastes will be produced at CGS that cannot be prepared for disposal in accordance with 10 CFR 61. When changes in the system or process do occur that are out of the ordinary, processing requirements will be determined on a case-by-case basis.

11.4.3.12 Waste Classification

Waste is classified at CGS to determine if wastes meet 10 CFR 61 Class A, B, or C. The individual waste stream will be sampled and analyzed for nuclides in Tables 1 and 2 of 10 CFR 61 to establish the waste classification. This analysis may in many instances use scaling factors to tie difficult to measure nuclides, to more easily identified gamma emitting nuclides. The requirements for the determination of these scaling factors is administratively controlled by plant procedure.

11.4.3.13 Waste Packaging and Shipping

The radioactive waste shipped from CGS for disposal or further processing is containerized, prepared, and shipped in accordance with applicable state, DOT, and NRC regulations.

Table 11.4-1

Waste Processing Systems Capacities

Waste Processing Systems	Flow Rates and Capacities
Liquid Waste	
EDR subsystem	14,341 to 104,826 gpd
EDR storage	135,000 gal
FDR subsystem	5700 to 55,289 gpd
FDR storage	40,000 gal
Chemical waste subsystem	1500 to 20,600 gpd
Chemical waste storage	65,000 gal
Filter sludge and chemical waste concentrates	
Normal	8000 to 16,000 ft^3/year
Processed volume for disposal	8000 to 16,000 ft^3/year
Portable solidification system	
Normal	200 ft^3/day
Maximum	100,000 ft^3/year[a]
Storage	72 50-ft^3 liners
Dry compactible waste	
Compactible radwaste	20,000 ft^3/year
Dewatering system	
Normal	200 ft^3/12-hr shift
Maximum	100,000 ft^3/year[a]

[a] Figured on two shifts with increase in personnel.

Table 11.4-2

Solid Waste Management System Major Equipment Items

Equipment	Number Required	Construction	Design Pressure	Design Temperature	Capacity
Cleanup phase separators	2	Stainless steel shell and internals	Atmospheric	250°F	4500 gal each
Cleanup sludge discharge mixing pump	1	Stainless steel	150 psig	150°F	210 gpm at 170 ft TDH
Cleanup decant pump	1	Stainless steel	150 psig	150°F	53 gpm at 50 ft TDH
Condensate backwash receiving tank	1	Stainless steel shell and internals	Atmospheric	150°F	19,000 gal
Condensate backwash transfer pump	1	Stainless steel		150°F	450 gpm at 50 ft TDH
Condensate phase separator	2	Epoxy-coated carbon steel shell, stainless steel internals	Atmospheric	250°F	23,500 gal each
Condensate sludge discharge mixing pump	1	Stainless steel	150 psig	150°F	420 gpm at 160 ft TDH
Condensate decant pump	1	Stainless steel	150 psig	150°F	450 gpm at 50 ft TDH
Waste sludge phase separator tank	1	Epoxy-coated carbon steel, stainless steel internals	Atmospheric	150°F	13,000 gal
Waste decant pump	1	Stainless steel	150 psig	150°F	53 gpm at 50 ft TDH
Waste sludge discharge mixing pump	1	Stainless steel	150 psig	150°F	210 gpm at 105 ft TDH

Table 11.4-2

Solid Waste Management System Major Equipment Items (Continued)

Equipment	Number Required	Construction	Design Pressure	Design Temperature	Capacity
Spent resin tank	1	Stainless steel shell and internals	Atmospheric	150°F	1200 gal
Spent resin pump	1	Stainless steel	150 psig	150°F	21 gpm at 105 ft TDH
Decontamination solution concentrated waste tank[a]	2	Stainless steel shell and internals	Atmospheric	150°F	700 gal each
Decontamination solution concentrated waste pump[a]	1	Stainless steel	150 psig	150 °F	30 gpm at 70 ft TDH
Concentrated waste measuring tank[a]	1	Stainless steel	Atmospheric	150°F	400 gal
Transfer dolly[b]	1				

[a] Not in service.

[b] Track riding dolly for transfer of waste containers between the storage area and truck shipping area.

Table 11.4-3

Significant Isotope Activity in Dewatered Waste

Stream	Clean up Sludge	Waste Sludge	Equipment Drain Resin	Floor Drain Resin	Condensate Sludge
Batch Solid Production	524 lb/60 days	220 lb/3.4 days	1539 lb/66 days	1539 lb/67 days	3300 lb/18.5 days
Isotopes			Ci/ft^3		
^{89}Sr	0.63	--	9.0×10^{-3}	6.5×10^{-5}	4.8×10^{-3}
^{90}Sr	0.16	--	1.0×10^{-3}	7.2×10^{-6}	8.4×10^{-4}
^{91}Sr	--	--	5.2×10^{-3}	3.7×10^{-5}	--
^{92}Sr	0.46	--	1.0×10^{-3}	3.4×10^{-5}	7.1×10^{-6}
^{90}Y	0.16	--	1.0×10^{-3}	3.4×10^{-5}	8.4×10^{-4}
^{91}Y	0.023	--	2.3×10^{-3}	--	1.7×10^{-3}
^{91m}Y	--	--	3.6×10^{-3}	--	--
^{92}Y	--	--	1.0×10^{-3}	--	--
^{95}Zr	0.29	8.1×10^{-4}	--	--	4.2×10^{-4}
^{95}Nb	0.44	1.1×10^{-3}	8.4×10^{-4}	--	6.3×10^{-4}
^{99}Mo	--	2.0×10^{-3}	2.9×10^{-3}	2.4×10^{-5}	1.3×10^{-4}
^{99m}Tc	0.0015	1.3×10^{-3}	9.7×10^{-3}	1.1×10^{-4}	1.3×10^{-4}
^{103}Ru	--	--	--	--	2.1×10^{-4}
^{122}Sb	0.020	2.0×10^{-4}	1.1×10^{-5}	--	--
^{129m}Te	0.038	--	1.3×10^{-4}	6.9×10^{-7}	--
^{129}Te	0.024	--	--	--	--
^{132}Te	--	--	1.6×10^{-2}	1.3×10^{-4}	1.3×10^{-4}
^{83}Br	--	--	1.3×10^{-4}	4.5×10^{-6}	--

Table 11.4-3

Significant Isotope Activity in Dewatered Waste (Continued)

Stream	Clean up Sludge	Waste Sludge	Equipment Drain Resin	Floor Drain Resin	Condensate Sludge
Batch Solid Production	524 lb/60 days	220 lb/3.4 days	1539 lb/66 days	1539 lb/67 days	3300 lb/18.5 days
Isotopes			Ci/ft^3		
^{131}I	0.077	7.8×10^{-4}	1.01×10^{-2}	7.4×10^{-5}	2.3×10^{-2}
^{132}I	--	--	1.7×10^{-3}	3.5×10^{-5}	1.3×10^{-4}
^{133}I	--	--	7.3×10^{-3}	7.7×10^{-5}	--
^{134}I	--	--	8.4×10^{-4}	4.7×10^{-5}	--
^{135}I	--	--	3.6×10^{-3}	5.7×10^{-5}	--
^{134}Cs	0.17	3.0×10^{-3}	6.0×10^{-4}	4.9×10^{-6}	4.2×10^{-4}
^{136}Cs	0.0078	--	1.3×10^{-4}	--	--
^{137}Cs	0.18	4.4×10^{-3}	1.0×10^{-3}	7.6×10^{-6}	8.4×10^{-4}
^{138}Cs	--	--	2.1×10^{-4}	--	--
^{137m}Ba	0.17	--	1.0×10^{-3}	--	6.3×10^{-4}
^{139}Ba	--	--	8.4×10^{-4}	3.9×10^{-5}	--
^{140}Ba	0.076	--	1.0×10^{-2}	2.6×10^{-5}	2.7×10^{-3}
^{141}Ce	--	--	1.3×10^{-4}	--	3.8×10^{-3}
^{144}Ce	0.019	--	1.3×10^{-4}	4.7×10^{-6}	6.3×10^{-4}
^{140}La	0.087	3.9×10^{-5}	1.0×10^{-2}	--	2.9×10^{-3}
^{141}La	--	--	2.1×10^{-4}	--	--
^{142}La	--	--	1.3×10^{-4}	--	--
^{143}Pr	0.022	--	1.3×10^{-4}	--	8.4×10^{-4}

Table 11.4-3

Significant Isotope Activity in Dewatered Waste (Continued)

Stream	Clean up Sludge	Waste Sludge	Equipment Drain Resin	Floor Drain Resin	Condensate Sludge
Batch Solid Production	524 lb/60 days	220 lb/3.4 days	1539 lb/66 days	1539 lb/67 days	3300 lb/18.5 days
Isotopes			Ci/ft^3		
^{144}Pr	0.019	--	1.3×10^{-4}	--	6.3×10^{-4}
^{239}Np	--	--	5.4×10^{-2}	4.5×10^{-4}	--
^{51}Cr	1.8	1.5×10^{-2}	4.4×10^{-4}	4.1×10^{-6}	3.1×10^{-3}
^{54}Mn	0.089	2.1×10^{-3}	1.3×10^{-4}	7.0×10^{-5}	6.6×10^{-4}
^{56}Mn	--	2.3×10^{-4}	2.2×10^{-4}	7.8×10^{-6}	--
^{58}Co	1.8	3.3×10^{-3}	8.4×10^{-3}	6.1×10^{-5}	6.2×10^{-2}
^{60}Co	0.65	2.4×10^{-2}	1.1×10^{-3}	9.2×10^{-6}	9.7×10^{-3}
^{59}Fe	0.018	2.6×10^{-4}	1.3×10^{-4}	8.3×10^{-7}	8.8×10^{-4}
^{65}Zn	2.1	7.4×10^{-2}	3.5×10^{-4}	2.3×10^{-4}	4.4×10^{-4}
^{110m}Ag	0.14	8.8×10^{-6}	1.3×10^{-4}	9.0×10^{-6}	1.1×10^{-3}
^{187}W	--	1.5×10^{-4}	1.3×10^{-4}	1.4×10^{-6}	--
Total	9.67	1.4×10^{-1}	1.7×10^{-1}	1.7×10^{-3}	1.2×10^{-1}

Table 11.4-4

Expected Annual Production of Solids

	ft^3/year	Normal Activity Ci/Container[a]	Maximum Activity Ci/Container[a]
Cleanup filter demineralizer sludge	720	1196	1820
Condensate filter demineralizer sludge	7460	19	40
Waste floor drain and fuel pool filter demineralizer sludge	1000	0.2	3.4
Waste demineralizer resin	540	29	330
Total volume (ft^3)	9720		

[a] Based on 164 ft^3 of dewatered resin per container

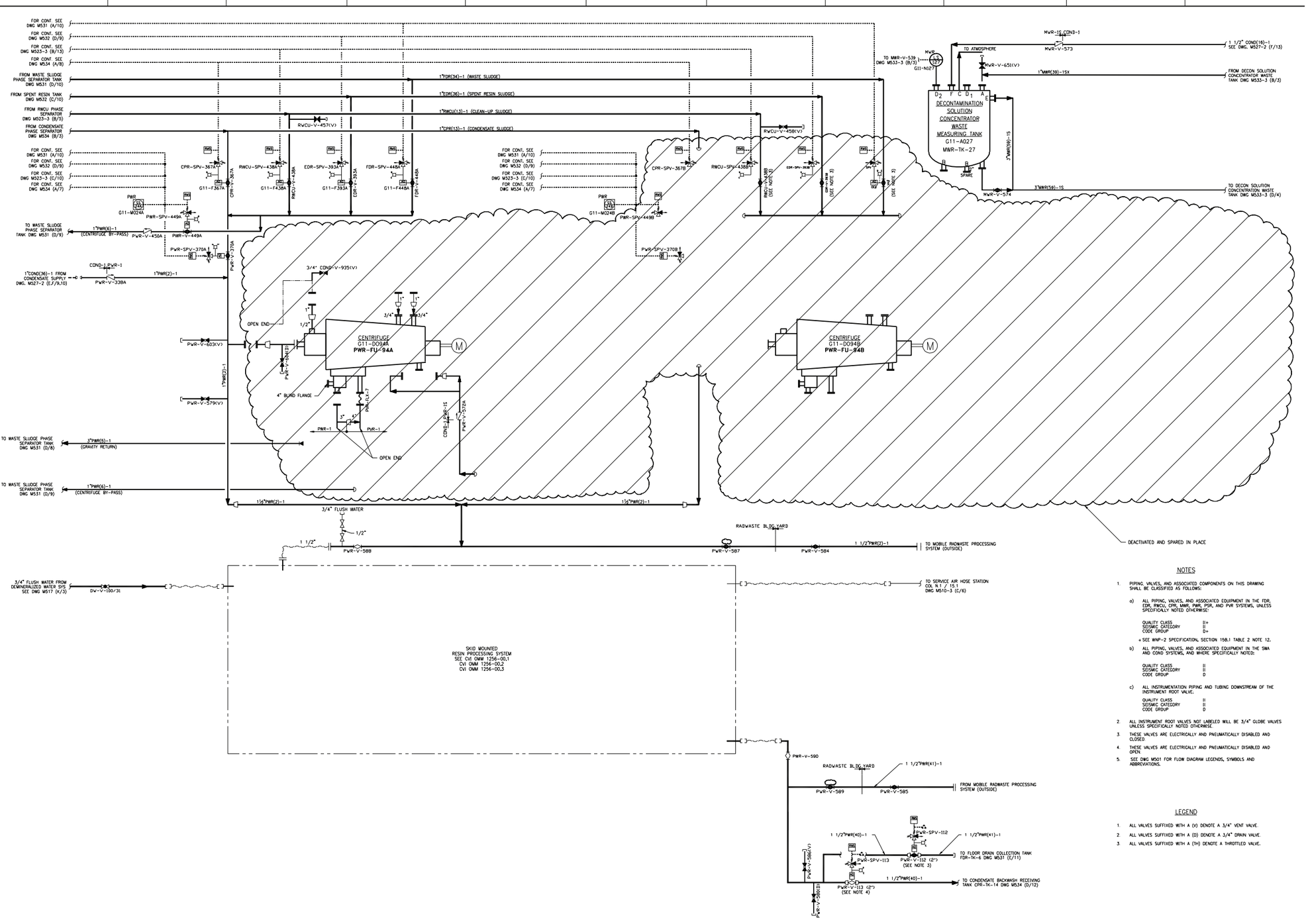

NOTES

1. PIPING, VALVES, AND ASSOCIATED COMPONENTS ON THIS DRAWING SHALL BE CLASSIFIED AS FOLLOWS:
   a) ALL PIPING, VALVES, AND ASSOCIATED EQUIPMENT IN THE FDR, EDR, RWCU, CPR, MWR, PWR, PSR, AND PVR SYSTEMS, UNLESS SPECIFICALLY NOTED OTHERWISE:

QUALITY CLASS	II+
SEISMIC CATEGORY	II
CODE GROUP	D+

      + SEE WNP-2 SPECIFICATION, SECTION 15B.1 TABLE 2 NOTE 12.
   b) ALL PIPING, VALVES, AND ASSOCIATED EQUIPMENT IN THE SWA AND COND SYSTEMS, AND WHERE SPECIFICALLY NOTED:

QUALITY CLASS	II
SEISMIC CATEGORY	II
CODE GROUP	D

   c) ALL INSTRUMENTATION PIPING AND TUBING DOWNSTREAM OF THE INSTRUMENT ROOT VALVE.

QUALITY CLASS	II
SEISMIC CATEGORY	II
CODE GROUP	D

2. ALL INSTRUMENT ROOT VALVES NOT LABELED WILL BE 3/4" GLOBE VALVES UNLESS SPECIFICALLY NOTED OTHERWISE.
3. THESE VALVES ARE ELECTRICALLY AND PNEUMATICALLY DISABLED AND CLOSED.
4. THESE VALVES ARE ELECTRICALLY AND PNEUMATICALLY DISABLED AND OPEN.
5. SEE DWG M501 FOR FLOW DIAGRAM LEGENDS, SYMBOLS AND ABBREVIATIONS.

LEGEND

1. ALL VALVES SUFFIXED WITH A (V) DENOTE A 3/4" VENT VALVE.
2. ALL VALVES SUFFIXED WITH A (D) DENOTE A 3/4" DRAIN VALVE.
3. ALL VALVES SUFFIXED WITH A (TH) DENOTE A THROTTLED VALVE.

Columbia Generating Station
Final Safety Analysis Report

Flow Diagram Radioactive Waste Disposal Solids Handling System

Draw. No. M536	Rev. 33	Figure 11.4-1

11.5 PROCESS AND EFFLUENT RADIOLOGICAL MONITORING AND SAMPLING SYSTEMS

The process and effluent radiological monitoring and sampling systems are provided to allow determination of the content of radioactive material in various gaseous and liquid process and effluent streams. The design objective and criteria are primarily determined by the system designation of either

a. Instrumentation systems required for safety, or
b. Instrumentation systems required for plant operation.

11.5.1 DESIGN BASIS

11.5.1.1 Design Objectives

The process and effluent radiological monitoring and sampling system is designed to provide for compliance with the requirements of 10 CFR Part 50 including the General Design Criteria (GDC) of Appendix A and provides the monitoring and sampling required to make measurements, evaluations, and reports recommended by Regulatory Guide 1.21, Revision l.

11.5.1.1.1 Systems Required for Safety

The main objective of radiation monitoring systems (RMS) required for safety is to initiate appropriate protective action to limit the release of radioactive materials from the reactor vessel and reactor building if predetermined radiation levels are exceeded in major process/effluent streams and to limit inflow of airborne radioactivity to the control room following an accidental release. Additional objectives are to have these systems available under all operating conditions, including accidents and postaccidents, and to provide control room personnel with an indication of the radiation levels in the major process/effluent streams plus alarm annunciation if high radiation levels are detected.

The RMS provided to meet these objectives are

a. Main steam line RMS,
b. Reactor building ventilation exhaust plenum RMS, and
c. Standby service water RMS.

11.5.1.1.2 Systems Required for Plant Operation

The main objective of the RMS is to provide operating personnel with measurement of the content of radioactive materials in all effluent and important process streams. This allows demonstration of compliance with Technical Specifications by providing gross radiation level

monitoring and collection of halogens and particulates on cartridges and filters (gaseous effluents). Additional objectives are to initiate discharge valve isolation on the offgas, liquid radwaste, or drain systems if predetermined release rates are exceeded and to provide for sampling at certain radiation monitor locations to allow determination of specific radionuclide content.

The RMS provided to meet these objectives are

a. For gaseous process streams

   1. Offgas pretreatment RMS,
   2. Offgas post-treatment RMS,
   3. Charcoal bed vault RMS, and
   4. Mechanical vacuum pump exhaust RMS.

b. For gaseous effluent streams

   1. Reactor building elevated release duct RMS,
   2. Turbine generator building ventilation release duct RMS, and
   3. Radwaste building ventilation release duct RMS.

c. For liquid process streams

   1. Standby service water RMS and
   2. Reactor building closed cooling water RMS.

d. For liquid effluent streams

   1. Radwaste effluent RMS,
   2. Circulating water (blowdown) RMS,
   3. Standby service water RMS, and
   4. Plant service water (TSW) RMS.

e. For primary containment monitoring

   1. Leak detection RMS and
   2. Loss-of-coolant accident (LOCA) tracking RMS.

11.5.1.2 Design Criteria

11.5.1.2.1 Systems Required for Safety

The design criteria for the RMS required for safety are that the systems shall:

a. Withstand the effect of natural phenomena (e.g., earthquakes) without loss of capability to perform their functions,

b. Perform its intended safety function in the environment resulting from normal and postulated accident conditions,

c. Meet the reliability, testability, independence, and failure mode requirements of engineered safety features,

d. Provide continuous output on control room panels,

e. Permit checking of the operational availability of each channel during reactor operation with provision for calibration function and instrument checks,

f. Ensure an extremely high probability of accomplishing its safety function in the event of anticipated operational occurrences,

g. Initiate prompt protective action prior to exceeding Technical Specifications limits,

h. Provide warning of increasing radiation levels indicative of abnormal conditions by alarm annunciation,

i. Insofar as practical, provide self-monitoring of components to the extent that power failure or component malfunction causes annunciation and channel trip,

j. Register full scale output if radiation detection exceeds full scale, and

k. Have sensitivities and ranges compatible with anticipated radiation levels.

The applicable GDC are 1, 2, 3, 4, 13, 19, 20, 21, 22, 23, 24, 29, 60, and 64 (see Section 3.1). The systems shall meet the design requirements for Safety Class 2, Seismic Category I systems, along with the quality assurance requirements of 10 CFR Part 50, Appendix B.

11.5.1.2.2 Systems Required for Plant Operation

The design criteria for operational RMS are that the systems shall

a. Provide continuous indication of radiation levels in the main control room,

b. Provide warning of increasing radiation levels indicative of abnormal conditions by alarm annunciation,

c. Insofar as practical, provide self-monitoring of components to the extent that power failure or component malfunction causes annunciation and, for systems initiating protective action, channel trip,

d. Monitor a sample representative of the bulk stream or volume,

e. Have provisions for calibration, function and instrumentation checks,

f. Have sensitivities and ranges compatible with anticipated radiation levels and Technical Specifications limits, and

g. Register full scale output if radiation detection exceeds full scale.

The RMS monitors discharges from the gaseous and liquid radwaste treatment systems and nonradioactive sumps have provisions to alarm and to initiate automatic closure of the effluent discharge valves on the affected treatment systems prior to exceeding the normal operation limits specified in the Technical Specifications. Additionally, the primary containment monitoring system meets the criteria, except for item g.

The applicable GDC are 13, 60, and 64 (see Section 3.1).

11.5.2 SYSTEM DESCRIPTION

11.5.2.1 Systems Required for Safety

Information on these systems is presented in Tables 11.5-1 and 11.5-2 and the arrangements shown in Figures 11.5-1 through 11.5-4. The equipment is designed to Quality Class I and Seismic Category I requirements. High reliability is further achieved by the use of redundancy as noted below.

11.5.2.1.1 Main Steam Line Radiation Monitoring System

This system monitors the gamma radiation level exterior to the main steam lines. The normal radiation level is produced primarily by coolant activation gases plus smaller quantities of

fission gases being transported with the steam. In the event of a gross release of fission products from the core, this monitoring system provides signals to the following:

a. Reactor water sample valves,
b. Mechanical vacuum pumps,
c. Mechanical vacuum pumps isolation valves,
d. Gland seal exhausters, and
e. Control room annunciators.

The system consists of four redundant instrument channels. Each channel consists of a local detector (gamma-sensitive ion chamber) and a control room radiation recorder and a readout module with an auxiliary trip unit. Power for two channels (A and C) is supplied from the reactor protection system (RPS) bus A and for the other two channels (B and D) from RPS bus B. Channels A and C are physically and electrically independent of channels B and D.

The detectors are located near the main steam lines in the steam tunnel as it enters the turbine building. The detectors are geometrically arranged so that this system is capable of detecting significant increases in radiation level with any number of main steam lines in operation.

Each radiation monitor has four trip circuits: two upscale (high-high and high), one downscale (low), and one inoperative. Each trip is visually displayed on the affected radiation readout module. A high-high or inoperative trip results in a channel trip in the auxiliary unit which is an input to the reactor water sample valves, mechanical vacuum pump shutdown, and discharge valve closure. A high trip actuates a main steam line (MSL) high control room annunciator common to all channels. A downscale and inoperative trip actuates a MSL downscale/inoperative control room annunciator common to all channels. High and low trips do not result in a channel trip. Each radiation monitor displays the measured radiation level.

Arrangement details are shown in Figure 11.5-1.

11.5.2.1.2 Reactor Building Exhaust Plenum Radiation Monitoring System

This system monitors the radiation level of the reactor building ventilation system exhaust plenum prior to its discharge from the building into the elevated release duct. A high radioactivity level in the exhaust system could be due to fission gases from a leak or an accident.

The system consists of four redundant instrument channels. Each channel consists of a local detection assembly (a sensor and converter unit containing a Geiger-Mueller (GM) tube and electronics) and a control room radiation readout module. The 120-V ac power for channels (A and B) is provided from Division 1, and for channels (C and D) from Division 2 power panels; the multipoint strip chart recorder supplied from the Division 2 uninterruptible power supply (UPS) power panel records the output of all four channels. The detection assemblies

are located outside the exhaust air plenum upstream of the secondary containment discharge isolation valves. The distance upstream from the inboard discharge isolation valve is such that, at the maximum design flow, the transport time from the detector location to the inboard discharge valve is greater than the total time required to respond to trip level radiation and close the inboard discharge valve before exceeding 10 CFR 50.67 dose limits (see Section 9.4.2.3).

Each radiation monitor has two trip circuits: one upscale (high-high) and one downscale/inoperative (fail safe design). Two-out-of-two upscale/downscale trips (channels A and B) initiates closure of the reactor building ventilation outboard isolation valves and the primary containment outboard purge and vent valves, and initiates startup of standby gas treatment (SGT) system train B. The same condition for channels C and D initiates closure of the corresponding inboard valves and initiates startup of SGT train A.

An upscale trip is displayed on the affected radiation readout module and actuates a reactor building vent high-high radiation control room annunciator common to all channels.
A downscale trip is also displayed on the radiation readout module and actuates a reactor building vent downscale control room annunciator common to all channels.

An additional trip signal for high radiation alarm is provided by the recorder and actuates a reactor building vent high radiation control room annunciator. Each radiation monitor displays the measured radiation level.

Arrangement details are shown in Figure 11.5-2.

11.5.2.1.3 Deleted

11.5.2.1.4 Standby Service Water Radiation Monitoring System

This system monitors gamma radiation levels of the service water liquid process and effluent streams.

Each monitor system consists of a gamma scintillation detector inserted into an offline chamber to which a process stream sample is piped. The detector locations are selected to obtain a reasonable geometry and are positioned away from crud trap and associated high background regions. Lead shielding is provided to further reduce background levels.

At each liquid offline detector location, a continuous sample from the liquid process pipe passes through a shielded detection assembly for gross radiation monitoring and then is returned to the process pipe. The detection assembly consists of a detector mounted in a shielded sample chamber. The local radiation monitor and the meter in the control room display the measured gross radiation level. The sample chamber and lines can be drained to allow assessment of background buildup. The flow meter at the sample rack provides local sample line flow indication.

Sample flow for each detector is from the standby service piping downstream of each of the two residual heat removal (RHR) heat exchanger (loops A and B). These monitors are designed to detect any primary coolant leakage into the standby service water through the RHR heat exchanger, during operation of the RHR heat exchangers in the shutdown heat removal mode.

Additional details are shown in Figure 11.5-4.

11.5.2.2 Systems Required for Plant Operation

All systems associated with the plant process cycle provide for indication and recording of radiation levels in the main control room in conjunction with alarm annunciation features.

Information on these systems is presented in Tables 11.5-1 and 11.5-2 and the arrangements are shown in Figures 11.5-2 and 11.5-4 through 11.5-10.

11.5.2.2.1 Gaseous Process and Effluent Radiation Monitoring System

11.5.2.2.1.1 Offgas Pretreatment Radiation Monitoring System. This system monitors radioactivity at the outlet of the water separator downstream of the catalytic recombiners. The monitor detects the radiation level which is attributable to the fission gases produced in the reactor and transported with steam through the turbine to the condenser.

A continuous sample is extracted from the offgas pipe via a stainless steel sample line that is then passed through a sample chamber and a sample panel before being returned to the suction side of the steam jet air ejector (SJAE). The sample chamber is a steel pipe which is internally polished to minimize plateout. It can be purged with room air to check detector response by using a three-way solenoid-operated valve. The valve is controlled by a switch located in the main control room. The sample panel measures and indicates sample line flow.

The detector is a gamma-sensitive ionization chamber mounted external to the sample chamber. The channel has a logarithmic radiation readout module which provides a system alarm output and is provided with a recorder.

The 120-V ac UPS power for count ratemeter and trip auxiliary circuit is supplied from critical Division 2 panel; strip chart recorder receives reliable (Division B) instrument power, and local 120-V ac for the offgas sample and vial sampler control panel.

The radiation readout module has four trip circuits: two upscale (high-high and high), one downscale (low), and one inoperative. The trip outputs are used for alarm function only. Each trip is displayed on the radiation monitor and actuates a control room annunciator: offgas high-high, offgas high, and offgas downscale/inoperative. Sample line flow is displayed at the sample panel.

The radiation level output by the monitor can be directly correlated to the concentration of the noble gases by using the semiautomatic vial sampler panel to obtain a grab sample. To draw a sample, a serum bottle is inserted into a sample chamber, the sample lines are evacuated, and a solenoid-operated sample valve is opened to allow offgas to enter the bottle. After the sampling bottle is removed, the sample is analyzed in the counting room with a multichannel gamma analyzer to determine the concentration of the various noble gas radionuclides. A correlation between the observed activity and the monitor reading permits calibration of the monitor.

For arrangement details see Figure 11.5-5.

11.5.2.2.1.2 Offgas Posttreatment Radiation Monitoring System. This system monitors radioactivity in the offgas piping downstream of the offgas system charcoal vessels and upstream of the offgas system discharge valve. A continuous sample is extracted from the

offgas system piping, passed through the offgas posttreatment sample panels for monitoring and sampling, and returned to the offgas system piping. Each sample panel has a cartridge and filter (one for particulate collection and one for halogen collection) in series with filter bypass capabilities (with respect to flow) with two identical continuous gross radiation detection assemblies. Each gross radiation detection assembly consists of a shielded chamber, a radiation detector, and a check source. Two radiation monitors in the main control room display the measured gross radiation level.

The sample panels and shielded chambers can be purged with room air to check detector response by using solenoid valves that can be operated from the control room or at the sample panels. The sample panels measure and indicate sample line flow. A solenoid operated check source for each detection assembly operated from the control room or locally can be used to check operability of the gross radiation channel.

Channel A monitor receives reliable (Division A) 120-V ac power and channel B is supplied with Division 2 power; the ±24-V dc auxiliary trip circuits are supplied internally from the monitor power supply. Control room chart recorder receives reliable (Division B) instrument power. Offgas posttreatment sample panel 11A is provided 120-V ac (Division A) power and offgas posttreatment sample panel 11B is provided 120-V ac (Division B) power.

Each radiation readout module has four trip circuits: two upscale (high-high-high, and high), one downscale (low), and one inoperative. Each trip is visually displayed on the radiation monitor. The first three trips actuate corresponding control room annunciators: offgas posttreatment high-high-high radiation, offgas posttreatment high radiation, and offgas posttreatment downscale. A high-high trip from the recorder actuates an offgas posttreatment high radiation annunciator in the main control room. High or low sample flow measured at the sample panel actuates a control room offgas posttreatment trouble annunciator.

A trip auxiliary unit in the control room takes the high-high-high and downscale trip outputs and, if its logic is satisfied, initiates closure of the offgas system discharge and drain valves. The logic is satisfied if two high-high-high, one high-high-high and one downscale, or two downscale trips occur. The high-high-high trip setpoints are determined such that valve closure is initiated prior to exceeding Technical Specifications limits. Any one high upscale trip initiates closure of the offgas system bypass line valve and initiates opening of the charcoal adsorber treatment line valve.

Grab sampling functions required for isotopic analysis and gross monitoring calibrations can be performed at each redundant sample panel.

For arrangement details see Figure 11.5-5.

11.5.2.2.1.3 Offgas Charcoal Bed Vault Radiation Monitoring System. The charcoal bed vault air handling room is monitored for an increase in the gross gamma radiation level from

leakage of radioactive noble gases out of the treatment system. The channel includes a sensor indicator, trip unit, and a locally mounted auxiliary unit. The detector is mounted outside of the air handling room door. The insulated door only attenuates 80 keV gamma (^{133}Xe) by approximately 40%. An indicator and trip unit is located in the main control room. The channel provides for sensing and readout, both local and remote, of gamma radiation over a range of six logarithmic decades (10^{+0} to 10^{+6} mR/hr).

The indicator and trip unit has one adjustable upscale trip circuit for alarm and one downscale trip circuit for instrument inoperative which annunciates in the main control room. The trip circuits are capable of convenient operational verification by means of test signals or through the use of portable gamma sources. Power is supplied from the channel A power supply of the reactor handling ventilation exhaust plenum RMS.

For arrangement details see Figure 11.5-2.

11.5.2.2.1.4 Mechanical Vacuum Pump Exhaust Radiation Monitoring System. The radiation monitor on the mechanical vacuum pump exhaust is designed to alarm, stop, and isolate the mechanical vacuum pumps in the case of high level of radioactive gases in air being exhausted to the reactor building elevated release duct. The mechanical vacuum pump is operated during plant startups to remove bulk air from the condenser and is secured at the point where the steam jet air ejection suction is available and condenser offgases are routed through the recombiner charcoal process treatment system. In addition to monitoring discharges via the mechanical vacuum pumps, the turbine gland seal air exhauster system is continuously monitored via this process radiation monitoring system. Clean sealing steam is used on the turbine gland seals to maintain the releases of radionuclides to as low as is reasonably achievable (ALARA) limits. The monitor complies with GDC 64 and is Quality Class II and Seismic Category II.

The channel includes an energy-compensated GM detector, a readout module, and recorder in the main control room. The channel provides for sensing and readout, both local and remote, of gamma radiation over a range of four logarithmic decades (10^{-2} to 10^{2} mR/hr).

The indicator and trip unit has two adjustable trip circuits. The upscale trip circuit generates a high radiation alarm and stops the mechanical vacuum pumps. The adjustable downscale trip circuit generates an instrument alarm.

For arrangement details see Figure 11.5-6.

11.5.2.2.1.5 Reactor Building Elevated Release Duct Radiation Monitoring and Sampling System. This system is one of various plant gaseous effluent monitoring systems used to comply with regulatory requirement GDC 64 and 10 CFR 20. GDC 64 requires utilization facilities to provide a means to monitor effluent discharge paths for radioactivity that may be released into the outside atmosphere during normal operations and postulated accidents. Under

normal operating conditions, this criterion is met by applying applicable provisions found in Regulatory Guide 1.21, Rev. 1, Position C and Appendix A. Under postulated accident conditions, this criterion is met by applying applicable provisions found in NUREG-0737, Item 11.F.1, Attachments 1 and 2, and Regulatory Guide 1.97, Rev. 2, Position C and Table 1. 10 CFR 20 limits the release of radioactive materials to within specified quantities. These limits are specified in the ODCM. A necessary requirement of limiting the release of radioactive material is to continually measure radioactivity release points. The same provisions of Regulatory Guide 1.21, Rev. 1, provide an acceptable methodology to measure radioactivity. Additionally, this system and the LOCA detectors of Section 11.5.2.2.3.2 comply with GDC 13. This system is evaluated to ANSI N42.18-1980, Section 5.4. For this system, ANSI N13.1-1999 supersedes reference to ANSI N13.1-1969 in the above documents. ANSI N13.1-1999 methodology assures continuous representative sampling of radioactive gaseous effluents released from the duct.

The system provides detection capability for Regulatory Guide 1.97 variables/categories C.2, C.3, E.2 and E.3. These variables are given in Regulatory Guide 1.97, Rev. 2, Table 1. They are: Type C – Containment Effluent Radioactivity – Noble Gases (from identified release points including Standby Gas Treatment System Vent), Type C –Effluent Radioactivity – Noble Gases (from buildings as indicated above), Type E –Noble Gas and Vent Flow Rate Standby Gas Treatment System Purge (for Mark II plants), Type E – Noble Gas and Vent Flow Rate Secondary Containment Purge (for Mark II plants), Type E – Noble Gas and Vent Flow Rate Secondary Containment (reactor shield building annulus), and Type E – Particulates and Halogens All Identified Plant Release Points. Portions of this system which are necessary in order to monitor the Regulatory Guide 1.97 Category 2 variables stated above are Quality Class 2+. All other portions of the system are Quality Class 2.

Per the above regulations, four categories of effluent are monitored or sampled: noble gases, halogens, particulates, and tritium. Monitoring and sampling methods provide gross radioactivity concentration values and individual radionuclide activity concentration values. These values are direct inputs into plant analyses. Under normal conditions noble gas, halogen, particulate, and tritium values input into analyses that demonstrate radionuclide releases into the environment do not exceed limits found in the ODCM. Furthermore, the values demonstrate the adequacy and performance of containment and effluent controls. Under postulated accidents, monitoring the release of noble gases can show significant releases from the Reactor Building, allow for the assessment of a release, indicate containment breach and accomplishment of mitigation actions, and provide verification. Sampling of halogens and particulates can show significant releases from the Reactor Building, allow for the assessment of a release, and provide the ability to conduct long-term surveillance.

The system is not required to remain functional after a seismic event. SSCs inside the duct, cable chase C416, and the Main Control Room are mounted Seismic Category 1M to prevent interactions with Seismic Category 1 SSCs. The Remote Sampling System post-accident samplers, the transformer, and the noble gas monitoring skid (NGMS) are mounted Seismic

Category 1M because these SSCs are heavy and are mounted to floors that are Seismic Category 1. All system components are Seismic Category 2.

Per the regulatory guidance above, the system must have a reliable power source. To meet this requirement, the system is powered off of a power source which is backed by the emergency diesel generators and, therefore, is considered reliable under postulated accident conditions. The power source is not redundant, as Regulatory Guide 1.97 and NUREG-0737 do not require a redundant or a battery backed power source for this particular monitoring and sampling function.

Reactor Building Elevated Release Duct is located adjacent to the north wall of the Reactor Building. The duct takes supply from the gland seal and mechanical vacuum pumps, the Off Gas System, the Standby Gas Treatment System exhaust, and the Reactor Building Ventilation System exhaust. These effluents exhaust to the outside atmosphere at the top of the duct.

Both monitoring and sampling are performed continuously using offline detectors and sampling media. The sample effluent is taken at a nominal supply flow of 2 SCFM using a shrouded nozzle located near the top of the elevated release duct. The shrouded nozzle is located so as to obtain a representative sample of the process effluent. Design and location of the shrouded nozzle are per guidance given in ANSI N13.1-1999. The nozzle is connected to a stainless steel tube, which runs down the inside of the elevated release duct, exits the duct, runs down the northwest portion of the outside wall of the Reactor Building, and penetrates through the Reactor Building roof into corridor C402. The tubing connects to the remote sampling system, located in the southeast corner of the corridor. After passing through the remote sampling station, the sample effluent is routed, via a second run of tubing, along the south wall of the corridor, into the Radwaste and Control Building - first through the cable chase and then into room C405. In C405 the tubing connects to the NGMS. After passing through the NGMS, the sample effluent is routed through a small section of tubing and vented directly to the outside atmosphere. The sampling station is located sufficiently close to sampling point so as to meet the sampling efficiency guidelines given in ANSI N13.1-1999. The NGMS is located in C405 to avoid space restrictions and environmental concerns. The system is heat traced to maximize sample transport and mitigate the potential for condensation inside the sample line.

The noble gas monitoring skid is a GEMS-700 monitoring system. It includes three noble gas detectors: low, intermediate, and high. The low range detector is located on the normal sample line path of the skid. The intermediate and high range detectors are located on the accident sample line path of the skid. Under normal conditions, the normal sample line is open, the bypass line is closed, and the accident sample line is closed. On a signal of elevated radiation levels, the skid accident sample line opens, the bypass line opens, and the normal line closes. The low range detector is a plastic beta scintillation detector. The intermediate range and high range detectors are cadmium telluride semiconductor gamma detectors. Table 11.5-1

lists the design ranges and sensitivities of each detector. The GEMS-700 is equipped with a local processing and display unit and a remote display unit. Signal from the local processing and display unit is routed to the remote display unit and from the remote display unit to a digital recorder. The local processing and display unit is located on the GEMS-700. The remote display unit and digital recorder are located in the main control room. From the recorder, signal is sent to TDAS and four annunciator alarms. The alarms are: RB STACK GENERAL TROUBLE, RB STACK CRITICAL FAILURE, RB STACK RAD ALERT, and RB STACK RAD HIGH.

The remote sampling station consists of a normal sample line, a bypass sample line, and an accident sample line. The normal line divides into two redundant branches, each of which contains a filter paper medium and a charcoal cartridge. The filter paper collects particulates and the charcoal cartridge adsorbs halogens. Sampling frequency is shown on Table 11.5-3 and the ODCM. The accident line also divides into two redundant branches, each of which connects to a shielded particulate and iodine sampler. The sampler contains a filter paper medium to collect particulates and a silver zeolite cartridge to trap halogens. The redundant sampling media on the normal and accident lines allow for continuous sampling to occur. The samplers on the accident sample line are shielded to limit personnel radiation exposure, per provisions in NUREG-0737. A flow totalizer on the remote sampling station is used to calculate the volume of effluent passing through the sampling media per a given sample. The sampling media are transported to a laboratory for analyses. The activity concentrations of particulates and halogens are determined using the laboratory measured activity values and the flow totalizer measured effluent sample volume. Under normal conditions, the normal sample line is open and the bypass line is closed. On an elevated level of radiation signal from the NGMS, the normal sample line automatically closes and the bypass line automatically opens. The accident line branches off from the bypass line. Downstream of the sampling media all three branches recombine before connecting to a system pump, which drives the sample effluent through the system to the NGMS. A redundant pump, on the remote filter station ensures system reliability. See Figure 11.5-11 for a simplified drawing of the system.

The remote sampling station and the noble gas monitoring skid also provide for the connection of a tritium sampler. Sampling of tritium is performed during normal conditions.

Major electrical components are located in corridor C402 and room C405. Heat trace and conduit are located in the elevated release duct, outside, in corridor C402, the cable chase C416, and room C405. Both C402 and C405 are equipped with environmental monitors, which provide signal to the Main Control Room if the environments in either of these two areas are outside the allowable environmental operating limits of the electrical devices or if either environmental monitor becomes inoperable. This is done to meet the requirements of Regulatory Guide 1.89, Rev. 1, for augmented quality systems. A signal from either environmental monitor will cause a RB STACK GENERAL TROUBLE alarm or a RB STACK CRITICAL FAILURE alarm on the annunciation panel in the Main Control Room. Loss of either environmental monitor will cause a RB STACK CRITICAL FAILURE alarm.

Under normal conditions, the system is only used to monitor and sample the release of radioactive gaseous effluents and no setpoints or actions, manual or automatic, are associated with this system. However, under abnormal conditions the monitoring portion of the system provides input to Emergency Action Level (EAL) scheme for classification of an emergency. The EAL thresholds and their associated classifications are given in the Emergency Plan procedures.

The monitoring instrumentation is calibrated and inspected at regular intervals, per the recommendations of the vendor, operating experience with similar components, and ANSI N13.1-1999. Both calibrations and inspections are performed per plant surveillance test procedures. Preventive maintenance is also performed on components susceptible to failure. This subset of components was chosen per vendor recommendation and operating experience. Frequently replaced parts are maintained available on site. While less frequently used replacement parts are available from the vendor or the vendor's subcontractor as stated on the GEMS-700 procurement specification.

Note 1: The previous Reactor Building Elevated Release Duct monitoring system consisted of three HPGe detectors, associated processing equipment, and a recorder. During normal conditions, this system provided monitoring of noble gases. During postulated accident conditions, this system provided monitoring of noble gases, particulates, and halogens. The previous system has not been physically removed from the plant. However, the previous system has been de-terminated and therefore no longer functions. For a diagram of the previous monitoring system see Figure 11.5-11A.

Note 2: The previous Reactor Building Elevated Release Duct sampling system consisted of two holders for filter media and charcoal cartridges. During normal conditions, the previous system provided sampling of particulates and halogens. The previous system has not been physically removed from the plant. However, the previous system has been de-terminated and therefore no longer functions. For a diagram of the previous sampling system see Figure 11.5-6.

11.5.2.2.1.6 Turbine Generator Building Ventilation Release Duct Radiation Monitoring System. This monitoring system measures the radioactivity in the turbine building exhaust prior to its discharge to the environment and in doing so complies with Regulatory Guide 1.21, Revision 1, GDC 64, and NUREG-0737. This monitor detects the fission and activation products from the steam which may leak from the turbine or the other primary components in the building. The gaseous activity in the exhaust is expected to normally be below detectable levels. The particulate and iodine activity is typically accumulated on a filter and cartridge respectively for a week to obtain sufficient activity to be detectable. These filters are analyzed to determine the quantities of specific radionuclides present and the results, together with the gaseous activity strip chart recorder, provide a permanent record of radioactivity released to the environment.

A continuous representative sample is extracted from the exhaust vent through a multi-ported isokinetic probe, down a 30-ft tube to pass through a filter paper to collect particulates, and through an impregnated charcoal cartridge to collect iodine. The sample travels through two gas detectors, a mass flow transducer, a local flow meter with switch, and then a sample pump prior to being exhausted to the radwaste building roof area by the turbine building exhaust fans. The sample flow rate is automatically adjusted to compensate for effluent flow changes.

The gas monitoring system includes two local detectors mounted in one lead-shielded chamber, a local ratemeter with display, a remote control/display unit, and a recorder in the main control room. The normal sample flows through the high range detector followed by the low range detector. Arrangement details are shown on Figure 11.5-7.

The monitoring system includes four channels: channel 1, low-range (10^{-7} to 10^{-1} μCi/cc), channel 2, high-range (10^{-3} to 10^{+3} μCi/cc), channel 3, calculated composite range (10^{-7} to 10^{+3} μCi/cc), and channel 4, gas effluent release rate range (10^{+1} to 10^{+11} μCi/sec). A two-decade overlap is provided between the low and high range channels. The low and high range channels are equipped with a radioactive test source.

The gas monitoring system has no control functions. The monitor provides an alert radiation alarm and an instrument inoperative alarm, both of which annunciate in the main control room. The reliable power for low/high range radiation monitor(s) and recorder(s) is provided from Division A power panel and backed by standby power.

11.5.2.2.1.7 Radwaste Building Ventilation Release Ducts Radiation Monitoring System. This monitor system measures the radioactivity in the radwaste building ventilation air exhaust as it is being discharged to the environment and in doing so complies with Regulatory Guide 1.21, Revision 1, GDC 64, and NUREG-0737. Radioactivity originates from radwaste tank vents, from primary water processing equipment, and from laboratory sampling hoods, as well as various cubicles having liquid process treatment systems within the building. A continuous sample is drawn from each of the two out of three exhaust fans that are operating. The sampling uses isokinetic probes with a fixed flow rate and samples are isokinetic over the normal ventilation operating range. The representative sample is withdrawn through a multi-ported duct probe, through a tube passing through a particulate filter, and through a charcoal cartridge to collect particulate and iodine samples, which are removed at least weekly for laboratory radiochemical analyses. The filtered air sample streams from the operable exhaust fans are combined to pass through two gas detectors, a mass flow transducer, a local flow meter with switch and a sample pump prior to being exhausted to the room.

The gas monitoring system includes two local detectors mounted in one leaded-shielded chamber, a local ratemeter with display, a remote control/display unit, and a recorder in the main control room. The normal sample flows through the high range detector followed by the low range detector. Arrangement details are shown in Figure 11.5-7.

The monitoring system includes four channels: channel 1, low-range (10^{-6} to 10^{-1} μCi/cc), channel 2 high-range (10^{-3} to 10^{+3} μCi/cc), channel 3, calculated composite range (10^{-6} to 10^{+3} μCi/cc), and channel 4, gas effluent release rate range (10^{+1} to 10^{+10} μCi/sec). A two-decade overlap is provided between the low and high range channels.

The gas monitoring system has no control functions. The monitor provides an alert radiation alarm and an instrument inoperative alarm, both of which annunciate in the main control room. The reliable power for low/high range radiation monitor(s) and recorder(s) is provided from Division A, power panel and backed by standby power.

11.5.2.2.1.8 NRC Safety Evaluation Report, NUREG-0892 Acceptance. System comparisons to ANSI 13.10 (redesignated as ANSI N42.18) have been performed.

An inline gamma spectroscopy system provides an isotopic analysis of all effluents exiting the reactor building elevated release duct. See Section 11.5.2.2.1.5, Figure 11.5-11, and Table 11.5-1.

Particulate/iodine sampling of the other buildings (radwaste and turbine) exhausts will be handled by the normal effluent samplers where the postaccident release concentration is quite low.

If there were a reactor accident with a core fission product release, the reactor building (secondary containment) immediately isolates. The atmosphere is maintained at a 0.25 in. H_2O vacuum by the SGT system. The only potential airborne contamination that could reach the other buildings is from the SGT system bypass leakage pathways as listed in Table 6.2-16. Shielding needed for the radwaste and turbine building normal effluent sampling systems was evaluated using assumptions consistent with the discussion in Appendix J (see Sections J.2 and J.3). *For the purpose of defining the shielding requirements for the radwaste and turbine building, an iodine concentration of 3.7 x 10^{+4} $\mu Ci/cm^3$ is assumed in the inleakage air. This iodine concentration is based on a 50% core inventory release to the drywell atmosphere and a 50% plate-out factor. This plate-out factor is conservative for determining sample shielding requirements. With 0.35 scfh bypass leakage into the radwaste building, the building exhaust (83,000 cfm) concentration will be 2.6 x 10^{-3} $\mu Ci/cm^3$, ignoring building volume dilution. The normal effluent sampler operates at 3 cfm; therefore, the charcoal cartridge 30 minutes accumulation would be 6.7 mCi. This would result in a dose rate of 21 mR/hr at 1 ft from the cartridge. Doubling the dose rate to account for particulates yields 42 mR/hr at 1 ft from the sample assembly. Because of the high exhaust flow rate (260,000 cfm) and less inleakage (0.24 scfh), the turbine building exhaust is less concentrated.* The radwaste and turbine building normal effluent sampling systems are adequate for postaccident sampling and no shielding is necessary (see Section 11.5.2.2.1.5). The evaluation for shielding was not repeated for the implementation of the alternative source term (AST).

11.5.2.2.2 Liquid Process and Effluent Radiation Monitoring System

These systems monitor gamma radiation levels of liquid process and effluent streams.

Each monitor system consists of a gamma scintillation detector inserted into either a well in the process piping or a sump or an offline chamber to which a process stream sample is piped. The detector locations are selected to obtain a reasonable geometry and are positioned away from crud traps and associated high background regions. Lead shielding is provided to further reduce background levels.

At each liquid offline detector location a continuous sample is extracted from the liquid process pipe, passed through a shielded detection assembly for gross radiation monitoring, and then returned to the process pipe. The detection assembly consists of a detector mounted in a shielded sample chamber equipped with a check source. The meter and recorder in the control room displays the measured gross radiation level. The sample chamber and lines can be drained to allow assessment of background buildup. The flow meter at the sample rack provides local sample line flow indication. A solenoid-operated check source operated from the control room is used to check operability of the channel response.

The critical $\pm$24-V dc for monitor(s) is supplied from Division 1 (and 2) power panels, except for the plant service water monitor which receives 120-V ac from Division A panel, reliable

power is provided for control room strip chart recorders, sample control panel receives local 120-V ac.

The detector's local preamplifier unit is designed to remain fully operational in the expected environment. If exposed to radiation transients which exceed the channel range, the channel maintains full scale deflection and returns to normal functioning when the transient has subsided.

Each radiation monitor, except for the circulating water, has four trip circuits: two upscale (high-high and high), one downscale (low), and one inoperative. Each trip is visually displayed on the affected radiation monitor. Two of these trips actuate corresponding control room annunciators: one upscale (high radiation) and the downscale for the affected liquid monitoring channel. High or low sample flow measured at the sample panel actuates a control room high-low flow annunciator for the affected liquid channel.

All alarms are annunciated in a control room. Liquid monitoring system details are given in Table 11.5-2 and the monitor arrangements are shown in Figure 11.5-4.

11.5.2.2.2.1 Standby Service Water Radiation Monitoring System. See Section 11.5.2.1.4.

11.5.2.2.2.2 Reactor Building Closed Cooling Water Radiation Monitoring System. The radiation detector is located offline and samples the closed cooling water piping side of the reactor closed cooling water system (RCC) heat exchangers.

The monitor system is a diagnostic tool to verify that no inleakage of primary plant water has occurred from the reactor water cleanup system nonregenerative heat exchanger system which uses RCC as coolant. Since the RCC is a closed system, inleakage would be detected by the monitor system.

11.5.2.2.2.3 Radwaste Effluent Radiation Monitoring System. This monitor system measures the radioactivity in the radwaste effluent discharge prior to its entering the cooling tower blowdown line.

Liquid waste can be discharged from several radwaste processed water tanks such as the floor drain sample tank, waste sample tanks, or distillate drain tanks. These tanks contain water that has been processed through one or more treatment systems such as evaporation, filtration, and ion exchange. Prior to the discharge from any tank, the liquid in the appropriate tank is sampled and analyzed in the laboratory for radioactivity. Based on this analysis, discharge is permitted as specified in the Offsite Dose Calculation Manual (ODCM).

The radiation detector is located offline and samples the common discharge line from the liquid radwaste system through which all liquid radwaste is discharged to the blowdown line. The

piping arrangement is designed so that the sample well can be flushed to lower background levels.

The high-high upscale trip on the radwaste effluent radiation monitor is used to initiate closure of the radwaste system discharge valve. The trip point is set such that closure is initiated prior to exceeding ODCM limits for liquid effluents. The high upscale trip actuates an annunciator in the radwaste control room as well as the main control room.

11.5.2.2.2.4 Circulating Water and Plant Service Water Radiation Monitoring Systems. The circulating water monitor is located on the discharge side of the circulating water pumps for the main condenser in the coolant blowdown line to the Columbia River. The location of this monitor permits detection of radioactive material leaking to the circulating water from any source, including the TSW system. If an alarm condition exists, circulating water blowdown to the Columbia River is terminated by automatic closure of the circulating water blowdown valve in the circulating water pump house (see Section 9.2.1.2), and it annunciates in the control room.

During plant outages, water is discharged to the river via temporary pumps installed in the circulating water pump house and connected to the blowdown line. Automatic termination of blowdown is not provided for this temporary arrangement. The only possible source of radiation would be through the TSW system which is monitored for radiation. There is about a 2-hr holdup time in the circulating water pipe giving ample time for blowdown to be manually secured if an alarm is received.

The TSW radiation monitor is located in the TSW return header to the circulating water system. The monitor is an offline type that continuously measures the radioactivity level of the TSW returning flow to the circulating water system. The radiation detector is lead shielded to minimize background radiation effects. The signal from the detector is displayed on a readout module and recorded in the main control room.

11.5.2.2.3 Primary Containment Radiation Monitoring System

This monitoring system is composed of two parts, a sensitive two-channel leak detection system and a four-channel high activity LOCA tracking system.

11.5.2.2.3.1 Leak Detection Monitors. This monitoring system measures the radioactivity in the drywell and in doing so complies with Regulatory Guide 1.45, Revision 0, and GDC 30. The radioactivity in the drywell is from coolant and corrosion activation products plus fission products produced in the reactor and released through leaks.

This monitoring system has two redundant subsystems, each having two detectors, individually monitoring particulates, and noble gas activity. Additionally a charcoal sample cartridge is provided to trap halogen gases. The detectors are housed in divisionally separated sample

racks located in a reactor building sample room. The sample racks have incorporated blowers and flow controls to withdraw gas samples from the primary containment atmosphere via stainless steel sampling lines and vent back to the containment. The environment in which the local cabinets are located is maintained to limit upper temperature excursions that may occur in the reactor building during an accident. Associated radiation readout modules and recorders are mounted in the main control room along with alarm annunciators.

Required 120-V ac supply for Division 1 and 2 equipment in both the main control room and the reactor building sample room is provided on a divisional basis by the 120/240-V ac critical (Class 1E) instrumentation power system.

The two-channel detector assemblies are provided with lead shielding to minimize the effects of background radiation to ensure high sensitivity. The detectors are of the beta scintillation type and are provided with check sources to verify system operability. The particulate detector views a fixed filter collector on which airborne particulates are trapped. The noble gas detector views a fixed volume of gas.

Each radiation monitor has three trip circuits: one upscale Hi to alarm and close sample line valve, one upscale Alert, and one downscale for instrument inoperative. All alarms annunciate in the main control room. This monitoring subsystem provides no control function and is a diagnostic tool which enables the main control room operator to take appropriate action.

Arrangement details are shown in Figure 11.5-9.

11.5.2.2.3.2 Loss-of-Coolant Accident Tracking Radiation Monitoring Systems (Containment Drywell). The LOCA monitoring systems, CMS-RE-27E and CMS-RE-27F, monitor the drywell atmosphere from inside the drywell; while CMS-RE-27A and CMS-RE-27B monitor the drywell atmosphere through penetrations in the bioshield wall. These four monitors provide LOCA monitoring for abnormal radioactivity levels following an accident condition involving rupture of the reactor coolant boundary.

The in-containment LOCA monitors CMS-RE-27E and CMS-RE-27F, located at approximately 517 ft level Azimuth 291° and 515 ft level Azimuth 51.5° respectively, track long-term decreases in containment radioactivity that take place with decay and decontamination and comply with GDC 13 and 64. The in-containment LOCA monitors each contain a Victoreen Model 877-1 ionization chamber with a range of 1 to 10^7 R/hr. These two detectors are qualified and meet the criteria of Table II.F.1-3 of NUREG 0737, including calibration with a high level gamma source. The chambers will respond to low energy gamma radiation such as 81 keV from ^{133}Xe fulfilling the Regulatory Guide 1.97, Revision 2 criteria.

The LOCA monitors, CMS-RE-27A and CMS-RE-27B, are housed in the bioshield wall and are against the containment steel shell. These monitors will monitor the drywell radiation in conjunction with the in-containment LOCA monitors CMS-RE-27E and CMS-RE-27F. The

LOCA monitors, while not required for plant operation, are used to monitor the drywell in the post-LOCA situation.

The LOCA monitoring systems (CMS-RE-27A, CMS-RE-27B, CMS-RE-27E, and CMS-RE-27F) are redundant and separately supplied with power from Division 1 and 2 in both the main control room and remote locations.

Each ionization chamber is wired to a local monitor. Output from each local monitor is wired to a monitor located in the main control room. Radiation levels within the primary containment for each LOCA monitoring system are recorded in the main control room.

Each monitor has alarm circuitry and indication for high radiation and for instrument inoperative that annunciate in the main control room. This monitoring subsystem provides no control function and is a diagnostic tool which enables the main control room operator to take appropriate action.

Arrangement details are shown in Figure 11.5-10.

11.5.2.3 Sampling

The following sections present a detailed description of the radiological sampling procedures, frequencies and objectives for all plant process and effluent sampling. This sample program provides the means to show compliance with the ODCM for the process radiation monitoring system and radwaste system.

11.5.2.3.1 Process Sampling

Section 9.3.2 describes the design of sampling facilities provided for general sampling. The sample frequency, type of analyses, analytical sensitivity, and the purpose of the sample are summarized in Table 11.5-4 for each liquid process sample location and in Table 11.5-5 for each gas process sample location. The analytical procedures used in sample analysis are presented in Section 11.5.2.3.3. These samples serve to monitor radioactivity levels within various plant systems.

11.5.2.3.2 Effluent Sampling

Effluent sampling of all potentially radioactive liquid and gaseous effluent paths is conducted on a regular basis to verify the adequacy of effluent processing to meet the discharge limits to unrestricted areas. This effluent sampling program will be of such a comprehensive nature as to provide the information for the effluent measuring and reporting programs required by 10 CFR Part 50.36a in annual reports to the NRC. The frequency of the periodic sampling and analysis described herein is normal and will be increased if effluent levels approach

Technical Specifications limits. Tables 11.5-3 and 11.5-6 summarize the sample and analysis schedules which correspond to Regulatory Guide 1.21, Revision 1, guidance.

11.5.2.3.3 Analytical Procedures

Samples of process and effluent gases and liquids will be analyzed in the laboratory by the following techniques: gross beta counting, gross alpha counting, gamma spectrometry, liquid scintillation counting, and radiochemical separations.

Instrumentation which is available in the laboratory for the measurement of radioactivity includes a single channel analyzer, alpha counter, beta counter, liquid scintillation counter, and multichannel gamma spectrometer.

Samples for beta counting are evaporated to dryness on metal planchets prior to counting. Sample volume, counting geometry, and counting time are chosen to achieve the required measurement sensitivities. Correction factors are applied for sample-detector geometry, self-absorption and counter-resolving time.

Gross beta and gross alpha analyses of liquid effluent samples may be performed with an internal proportional counter. The samples are prepared for counting by evaporation onto metal planchets. Gross beta counting is also performed using a liquid scintillation counter.

Sample volume and counting times are chosen to achieve the required measurement sensitivity. When possible, sample volume is selected to maintain a sample residue thickness of less than 1 mg/cm^2. Correction factors are applied for self-absorption.

Gamma ray spectrometry is used for isotopic analyses of gaseous, airborne particulate and iodine, and liquid samples. High-resolution germanium solid-state detectors are available for this purpose. The detectors are calibrated against NIST traceable gamma ray standards for a variety of sample detector geometries. The gamma spectra are resolved using a software program developed for computerized spectrum resolution.

Gaseous tritium samples are collected by condensations or adsorption, and the resultant liquid is analyzed by liquid scintillation counting techniques.

Radiochemical separations are used for the routine analysis of ^{89}Sr and ^{90}Sr.

11.5.2.3.4 Inservice Inspection, Calibration, and Maintenance

During reactor operation, checks of system operability are made by observing channel behavior. During reactor operation at intervals specified in the Offsite Dose Calculation Manual (ODCM) and the Technical Specifications (TS), the response of each detector supplied with a remotely activated check source or LED source simulator will be recorded together with the instrument background count rate to ensure proper functioning of the

monitor. Any detector whose response is observed to be inconsistent with that expected for power operation and is not supplied with a remotely activated check source or LED source simulator will be checked with a portable source or by comparison of detector response to system activity. An exception to the portable source check requirement will be allowed for those detectors mounted in areas that are deemed hazardous to personnel.

The system has electronic testing and calibrating equipment, which permits channel testing without relocating or dismantling channel components. An internal trip test circuit, adjustable over the full range of the readout meter, is used for testing. Each channel is tested prior to performing a calibration check. Verification of valve operation, ventilation diversion, or other trip functions is done at this time if it can be done without jeopardizing the plant safety. The tests are performed in conformance with the ODCM test frequencies.

The continuous radiation monitors are calibrated to commercial radionuclide standards traceable to the NIST. Each continuous monitor is calibrated during the refueling outage or every 18 months as required by the ODCM, using standard sources with NIST traceability.

A calibration can also be performed by using liquid or gaseous radionuclide standards or by comparison analysis of particulate, iodine, liquid, or gaseous grab samples with laboratory instruments.

11.5.3 EFFLUENT MONITORING AND SAMPLING

The implementation of the requirements of GDC 64 concerning monitoring of gaseous effluent discharge paths for radioactivity is discussed in Section 11.5.2.2.1. Section 11.5.2.2.2 provides applicable discussions for liquid effluent radiation monitors.

11.5.4 PROCESS MONITORING AND SAMPLING

The implementation of the requirements of GDC 60 concerning automatic closure of isolation valves in gaseous and liquid effluent discharge paths is discussed in Sections 11.5.2.1 and 11.5.2.2. Section 11.5.2.2.1 provides a discussion of gaseous process radiation monitors. Section 11.5.2.2.2.2 provides a discussion of liquid process radiation monitors.

Table 11.5-1

Process and Effluent Radiation Monitoring System
(Gaseous and Airborne Monitors)

Monitor	Detector Location (Number of Channels)	Type	Efficiency/ Sensitivity	Range	Principal Radionuclides Measured	Expected Activity	Upscale Setpoints	
							Alarms	Trips
A. SAFETY-RELATED SYSTEMS								
Main steam line radiation monitors MS-RE-3A, 3B, 3C, and 3D	Adjacent to steam lines (4)	γ-ion chamber	3×10^{-10} amp/R/h	10^0 - 10^6 mR/h (6 dec. log)	Coolant activation gases	Steam line activity defined in Table 11.1-4	Above full power background, below trip	N/A
Reactor building exhaust plenum radiation monitors REA-RE-9A, 9B, 9C, and 9D	Inline (4)	GM[b]		10^{-2} - 10^2 mR/hr (4 dec. log)		Reactor bldg. activity defined in Table 11.3-7	Above background, below trip	Tech Specs
B. SYSTEMS REQUIRED FOR PLANT OPERATION								
Offgas pretreatment radiation monitor OG-RE-2	Offline, adjacent to sample chamber (1)	γ-ion chamber	3×10^{-10} amp/R/h	10^0 - 10^6 mR/h (6 dec. log)	Noble gas fission products	Offgas activity defined in Table 11.3-1	Above background	Tech Specs
Offgas posttreatment radiation monitors OG-RE-601A and OG-RE-601B	Offline (2)	β-scint, Part. Filter, Iodine Filter	4.08×10^5 cpm/μCi/ mL	10^0 - 10^7 cpm (2×10^{-5} to 24 μCi/cc) (7 dec. log)	^{133}Xe [a]	Offgas activity defined in Table 11.3-1	Above background	ODCM

Table 11.5-1

Process and Effluent Radiation Monitoring System
(Gaseous and Airborne Monitors) (Continued)

Monitor	Detector Location (Number of Channels)	Type	Efficiency/ Sensitivity	Range	Principal Radionuclides Measured	Expected Activity	Upscale Setpoints	
							Alarms	Trips
Charcoal bed vault radiation monitor OG-RE-11	Charcoal bed vault (1)	GM	N/A	10^0 - 10^6 mR/h (6 dec. log)	Noble gas	Charcoal bed inventory defined in Section 11.3	Above background	N/A
Mechanical vacuum pump discharge AR-RE-21	Inline (1)	GM		10^{-2} - 10^6 mR/hr (4 dec. log)	^{133}Xe	Within monitor range	Above background	ODCM
Reactor building elevated discharge radiation monitor								
PRM-RE-11	Offline (1)	ß-scint	1.810E+08 cpm/(µCi/cc)	1E-07 µCi/cc to 1E-01 µCi/cc	^{133}Xe [a]	RB activity Table 11.3-7	ODCM	N/A
PRM-RE-12	Offline (1)	CdTe	2.506E+04 cpm/(µCi/cm)	1E-03 µCi/cc to 1E+02 µCi/cc	^{133}Xe [a]	LOCA Table 15.6-10 and 15.6-11	N/A	N/A
PRM-RE-13	Offline (1)	CdTe	1.105E+01 cpm/(µCi/cm)	1E00 µCi/cc to 1E+06 µCi/cc	^{133}Xe [a]	LOCA Table 15.6-10 and 15.6-11	N/A	N/A
Particulate filter	Offline	Filter	N/A	from 10^{-12} µCi/cm^3	γ emitters[c]	ODCM Table 6.2.2.1-1	N/A	N/A
Iodine filter	Offline	Charc. cart.	N/A	from 10^{-12} µCi/cm^3	γ emitters	ODCM Table 6.2.2.1-1	N/A	N/A

Table 11.5-1

Process and Effluent Radiation Monitoring System
(Gaseous and Airborne Monitors) (Continued)

Monitor	Detector Location (Number of Channels)	Type	Efficiency Sensitivity	Range	Principal Radionuclides Measured	Expected Activity	Upscale Setpoints	
							Alarms	Trips
Turbine bldg. vent. exhaust radiation	Offline (2)	Part. filter[c] iodine filter				Turbine bldg. activity defined in Table 11.3-7	ODCM	N/A
TEA-RE-13 Low Range		ß-scint	N/A	10^{-7} -10^{-1} μCi/cc (6 dec. log)	^{133}Xe[a]			
TEA-RE-13A High Range		ß-scint	N/A	10^{-3} - 10^{3} µCi/cc (6 dec. log)	^{133}Xe[a]	LOCA mixture of F.P. activity see Table 15.6-9		
Radwaste bldg. vent. exhaust radiation	Offline (2)					Radwaste bldg. activity defined in Table 11.3-7	ODCM	N/A
WEA-RE-14 Low Range		ß-scint	N/A	10^{-6} -10^{-1} μCi/cc (5 dec. log)	^{133}Xe[a]			
WEA-RE-14A High Range		ß-scint	N/A	10^{-3} - 10^{3} µCi/cc (6 dec. log)	^{133}Xe[a]	LOCA mixture of F.P. activity see Table 15.6-9		
Primary containment LOCA monitors	Adjacent to containment steel walls	γ-ion chambers	amp/R/h	R/h (6 dec. log)	Fission product gases	Within monitor range	Above background	N/A
CMS-RE-27A, 27B	Outside(2)		1 x 10^{-10} amp/R/h	10^{-2} x 10^{4} R/h (6 dec. log)				
[b] CMS-RE-27E, 27F	Inside (2)		7 x 10^{-11} amp/R/h	10^{0} - 10^{7} R/h (6 dec. log)				

Table 11.5-1

Process And Effluent Radiation Monitoring System
(Gaseous And Airborne Monitors) (Continued)

Monitor	Location (Number of Channels)	Type	Efficiency/ Sensitivity	Range	Principal Radionuclides Measured	Expected Activity	Upscale Setpoints	
							Alarms	Trips
Primary containment radiation monitor	Offline					Containment discussed in Section 12.2		
Particulate CMS-RE-12-1A CMS-RE-12-1B	(2)	Part. filter ß-scint	N/A	10^{-12} - 10^{-6} μCi/cc (6 dec. log)	Fission gas daughter and corrosion activation product [d]		Above background, below trip	Full scale
Gas CMS-RE-12-3A CMS-RE-12-3B	(2)	ß-scint	N/A	10^{-7} – 10^{-1} μCi/cc (6 dec. log)			Above background, below trip	Full scale

[a] Sensitivity based on this radionuclide.

[b] Not required for plant operation.

[c] Composite of particulate filters analyzed for ^{89}Sr and ^{90}Sr.

[d] For particulate, Cs-137 is the fission product radionuclide used for converting counts per minute to μCi/cc. For gas, Kr-85 is the fission product radionuclide used for converting counts per minute to μCi/cc. The monitors display units of μCi/cc.

Table 11.5-2

Process and Effluent Radiation Monitoring System (Liquid Monitors)

Monitor	Detector Location (Number of Channels)	Type	Range	Principal Radionuclides Measured	Expected Activity	Upscale Setpoints: Alarms	Upscale Setpoints: Trips
Residual heat removal standby service water radiation monitor SW-RE-4, 5	Offline (2)	γ-scint	10^{-1} - 10^{6} cps (7 dec. log)	^{137}Cs [a] ^{60}Co	Less than minimum detector sensitivity	Above background	Not applicable
Reactor building closed cooling water radiation monitor RCC-RE-7	Offline (1)	γ-scint	10^{-1} - 10^{6} cps (7 dec. log)	^{137}Cs [a] ^{60}Co	Less than minimum detector sensitivity	Above background	Not applicable
Radwaste effluent radiation monitor FDR-RE-6	Offline (1)	γ-scint	10^{-1} - 10^{6} cps (7 dec. log)	^{137}Cs [a] ^{60}Co	Section 11.2	Above background	ODCM[b]
Circulating water effluent radiation monitor CBD-RE-8	Inline (1)	γ-scint	10^{-1} -10^{6} cps (7 dec. log)	^{137}Cs [a] ^{60}Co	Less than minimum detector sensitivity	Above background	Section 11.5.2.2.2.4
Plant service water radiation monitor TSW-RE-5	Offline (1)	γ-scint	1.0E-08 to 1.0E-02 μCi/cc (6 dec. log)	^{137}Cs [a] ^{60}Co	Less than minimum detector sensitivity	Above background	Not applicable

[a] Sensitivity based on this radionuclide.

[b] The alarm point will be set, based upon the activity, radionuclides, and dilution factor so that the concentration in the discharge line is less than 10 CFR 20 Appendix B, Table II, Column 2 limits.

Table 11.5-3

Radiological Analysis Summary of Gaseous Effluent Samples

Grab Sample Sample Description	Frequency	Sensitivity Analysis	Sensitivity μCi/ml	Purpose
Reactor building elevated release exhaust	Weekly	Gamma spectrum[a] Radioiodines[b]	10^{-11} 10^{-10}	Effluent record
	Quarterly	^{89}Sr and ^{90}Sr[c]	10^{-11}	
	Monthly	Gross alpha Tritium	10^{-11} 10^{-11}	
Radwaste building exhaust	As above	As above		Effluent record
Turbine building exhaust	As above	As above		Effluent record

[a] On particulate filter

[b] On charcoal cartridge

[c] On composite of particulate filters

Table 11.5-4

Radiological Analysis Summary of Liquid Process Samples

Grab Sample Sample Description	Frequency	Sensitivity		Purpose
		Analysis	μCi/ml	
Reactor coolant	In accordance with Technical Specifications			
		^{131}I, ^{133}I	10^{-6}	Evaluate fuel cladding integrity
		Gamma spectrum	10^{-6}	Determine radionuclides present in system
Reactor water cleanup system	Periodically	Gamma spectrum	10^{-6}	Evaluate cleanup efficiency
Condensate storage tanks	Weekly	Gamma spectrum	10^{-6}	Tank inventory
Fuel pool filter - demineralizer inlet and outlet	Periodically	Gamma spectrum	10^{-6}	Evaluate system performance
Waste collector tank	Batch[a]	Gamma spectrum	10^{-6}	Evaluate system performance
Floor drain collector tank	Batch[a]	Gamma spectrum	10^{-6}	Evaluate system performance
Chemical waste tank	Batch[a]	Gamma spectrum	10^{-6}	Evaluate system performance
Detergent drain tank (2)	Batch[a]	Gamma spectrum	10^{-6}	Tank inventory

[a]Analysis performed on an infrequent basis as needed to evaluate equipment performance or unusual water chemistry.

Table 11.5-5

Radiological Analysis Summary of Gaseous Process Samples

Grab Sample Sample Description	Frequency	Sensitivity Analysis	Sensitivity μCi/ml	Purpose
Containment atmosphere (drywell)	Periodically	Gamma spectrum[a]	10^{-11}	Evaluate prior to discharge
	Prior to entry	Gamma spectrum	10^{-10}	Determine need for respiratory equipment
Offgas pretreatment monitor sample	Periodically	Gamma spectrum	10^{-6}	Determine offgas activity
Offgas posttreatment sample	Periodically	Gamma spectrum[a,b]	10^{-10}	Determine offgas system cleanup performance
		Gamma spectrum[c]	10^{-6}	

[a] On particulate filter

[b] On charcoal cartridge

[c] Noble gas

Table 11.5-6

Radiological Analysis Summary of Liquid Effluent Samples

Grab Sample Sample Description	Frequency	Sensitivity Analysis	Sensitivity μCi/ml	Purpose
Floor drain sample tank	Batch[a]	Gamma spectrum	10^{-6}	Effluent discharge record
Waste sample tanks (2)	Batch[a]	Gamma spectrum	10^{-6}	Effluent discharge record
Liquid radwaste effluent (composite of all tanks discharged)	Monthly[b]	Gross alpha	10^{-7}	Effluent discharge record
		Tritium	10^{-5}	
	Quarterly[b]	$^{89}Sr/^{90}Sr$	10^{-8}	
Circulating water discharge line	Weekly grab of continuously collected proportional sample	Gross ß or Gamma Spectrum	10^{-6}	Effluent discharge record (backup sample)
		Tritium	10^{-5}	

[a] If tank is to be discharged, analyses will be performed on each batch. If tank is not to be discharged, analyses will be performed periodically to evaluate equipment performance.

[b] If liquids were discharged during the previous month or quarter, as applicable.

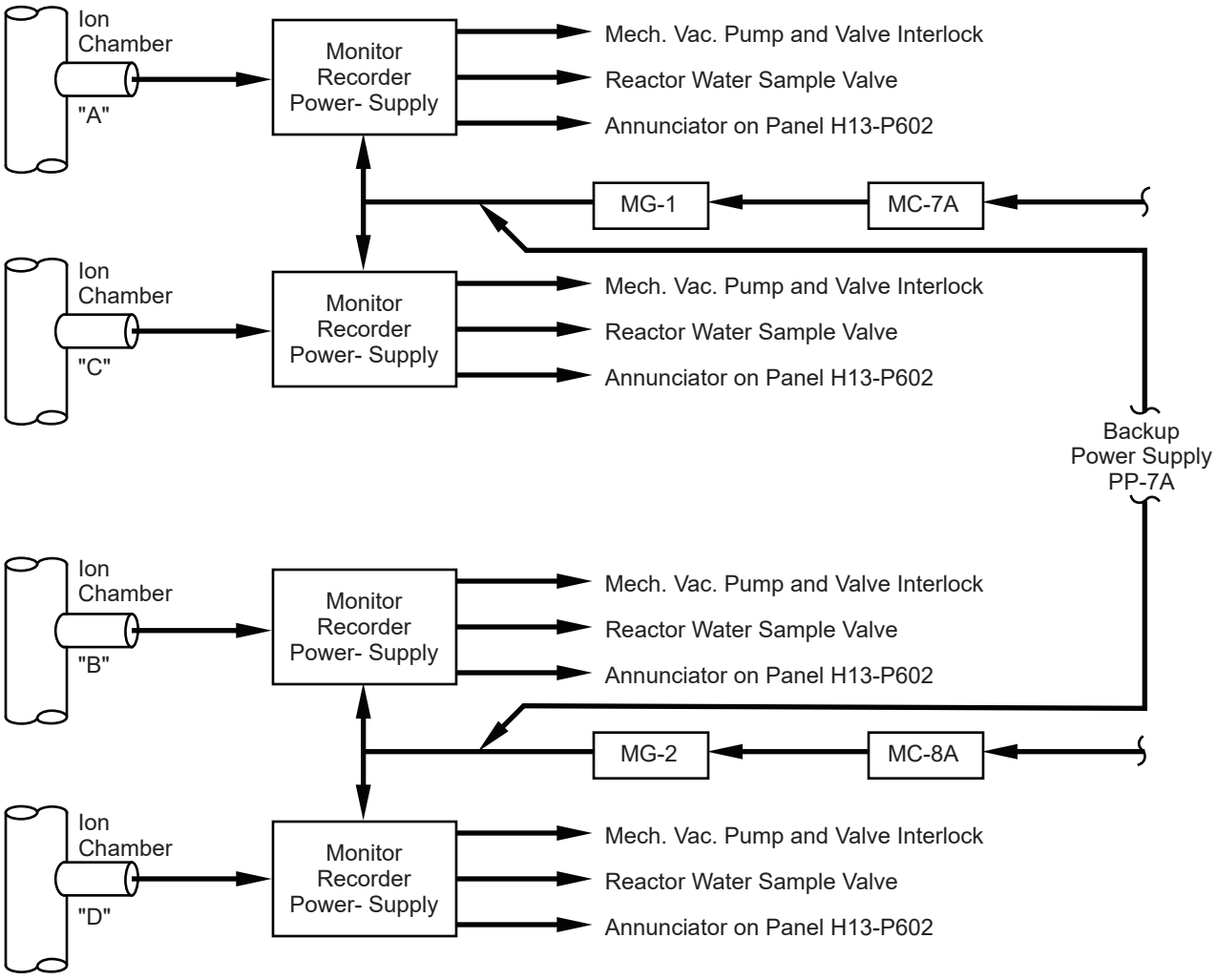

Columbia Generating Station **Final Safety Analysis Report**	**Main Steam Line Monitors**		
	Draw. No. **900547.32**	Rev.	Figure **11.5-1**

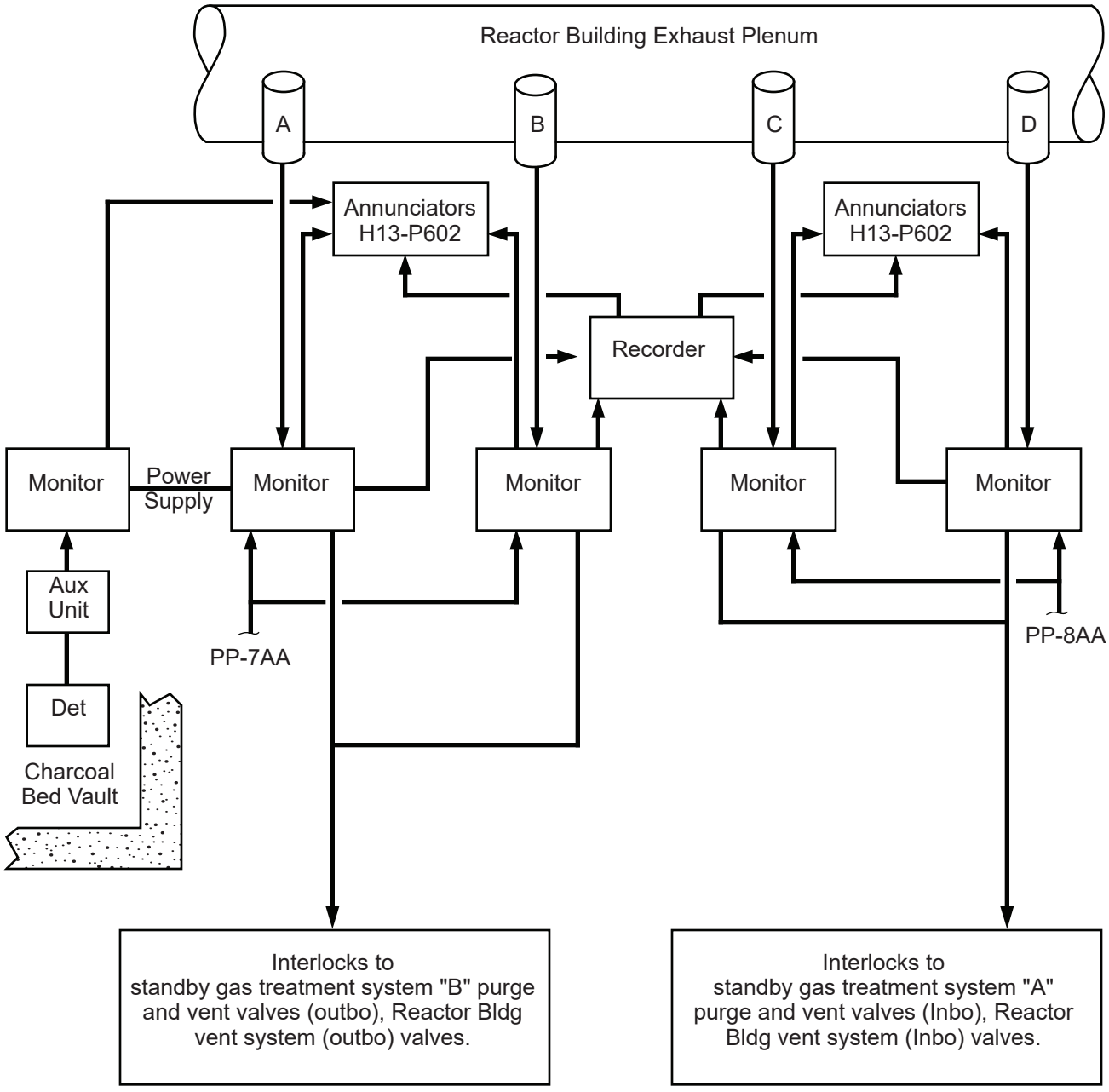

Columbia Generating Station Final Safety Analysis Report	Reactor Building Exhaust Plenum Monitors and Charcoal Bed Vault Monitor		
	Draw. No. 900547.48	Rev.	Figure 11.5-2

DELETED

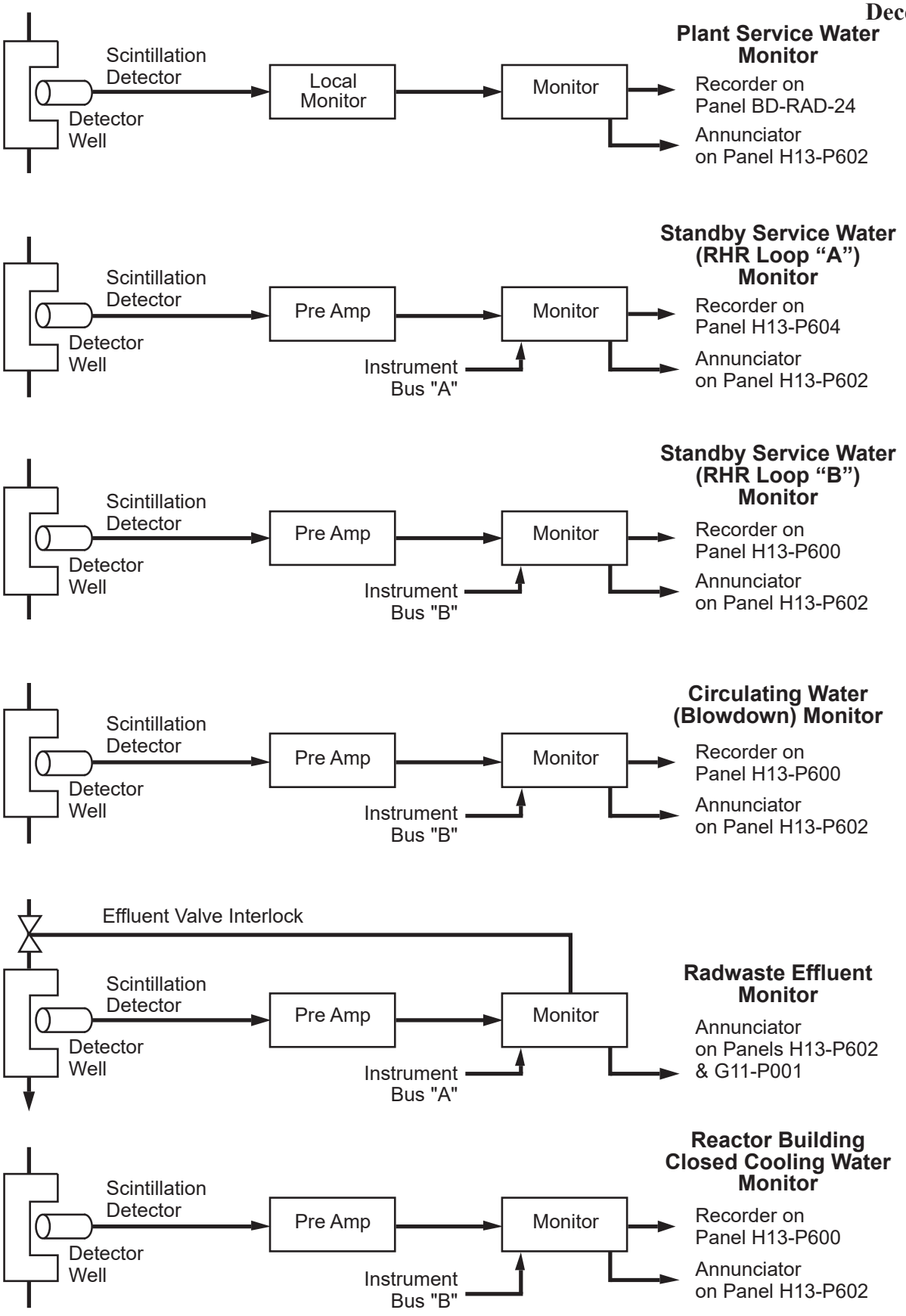

Columbia Generating Station
Final Safety Analysis Report

Process and Effluent Liquid Radiation Monitors

Draw. No. 900547.50	Rev.	Figure 11.5-4

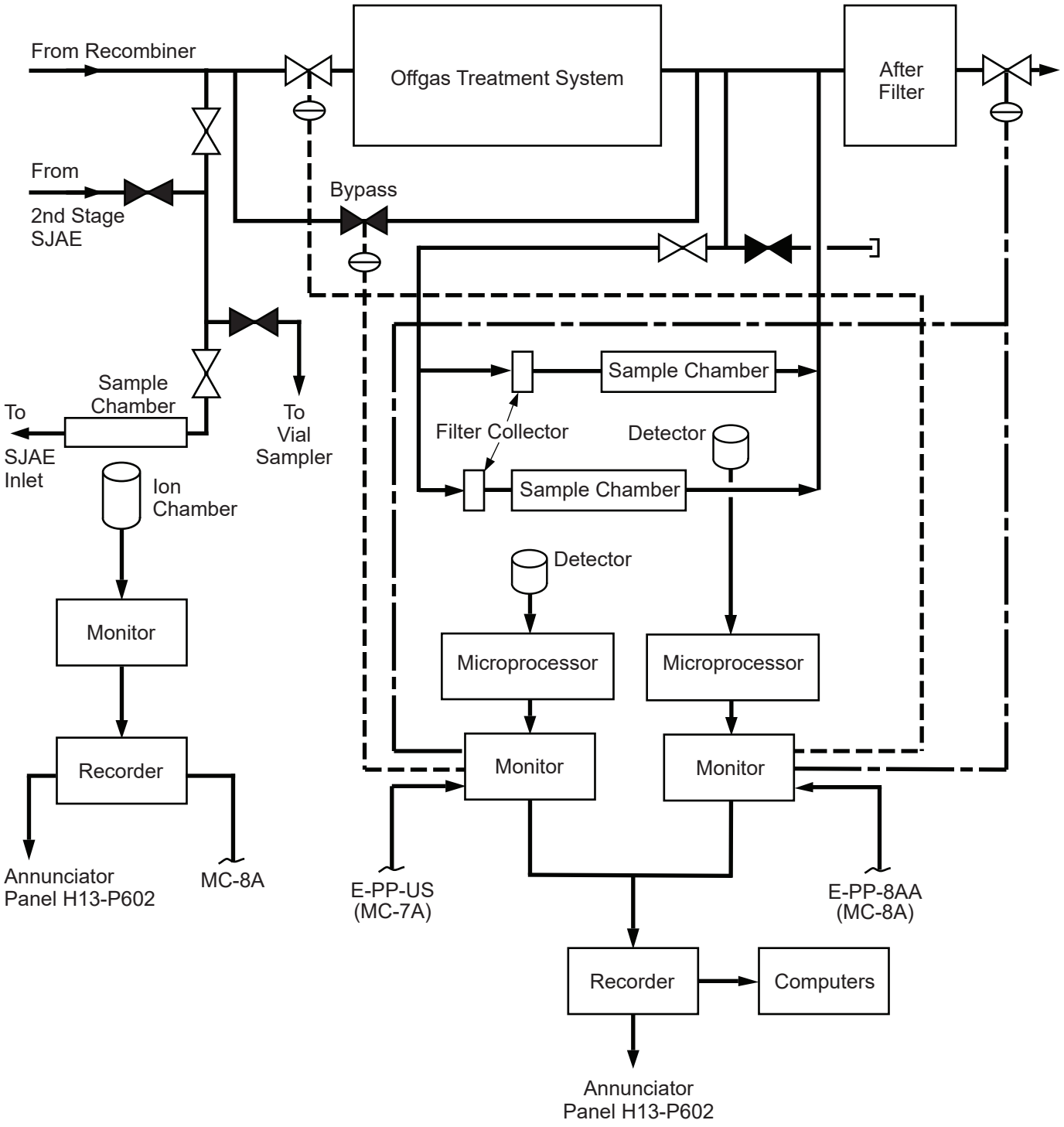

Columbia Generating Station Final Safety Analysis Report	Offgas Pretreatment and Posttreatment Radiation Monitors		
	Draw. No. 900547.51	Rev.	Figure 11.5-5

Mechanical Vacuum Pumps Exhaust Monitor

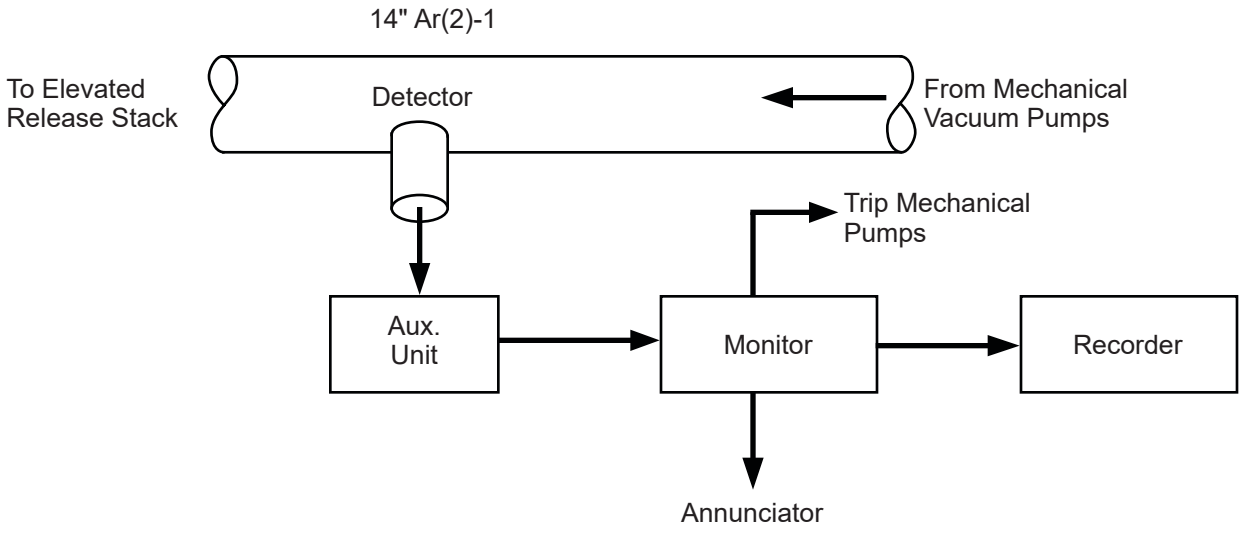

Reactor Building Ventilation Release Duct Monitor

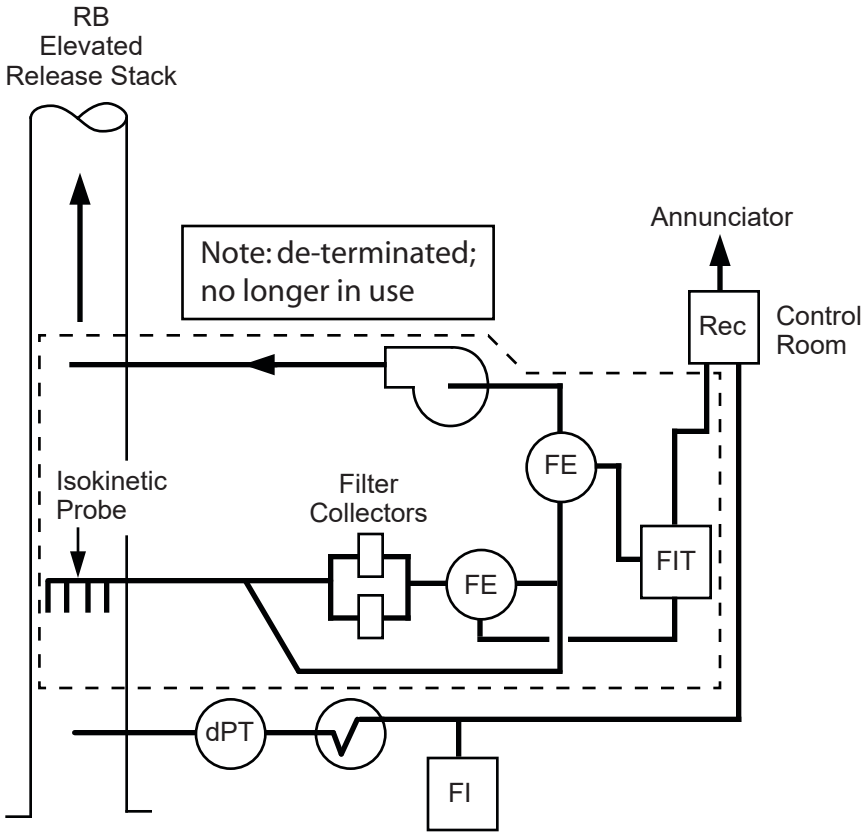

Columbia Generating Station Final Safety Analysis Report	Mechanical Vacuum Pumps Exhaust Monitor and Reactor Building Elevated Release Stack Monitor		
	Draw. No. 950021.32	Rev.	Figure 11.5-6

Turbine Building Ventilation Release Duct Monitor

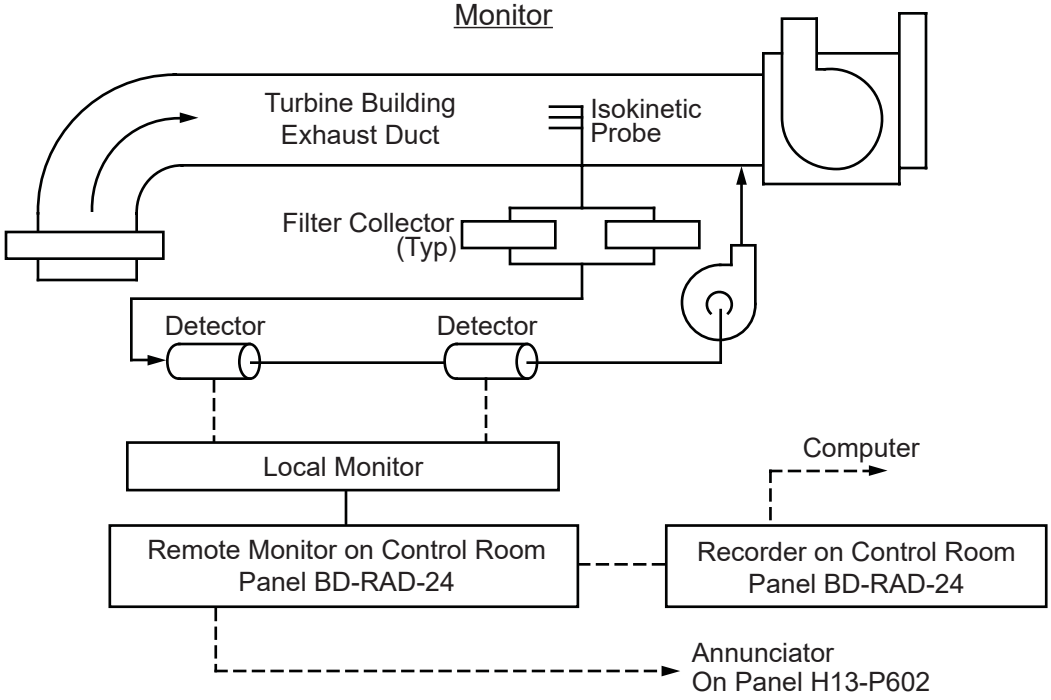

Radwaste Building Ventilation Release Ducts Monitor

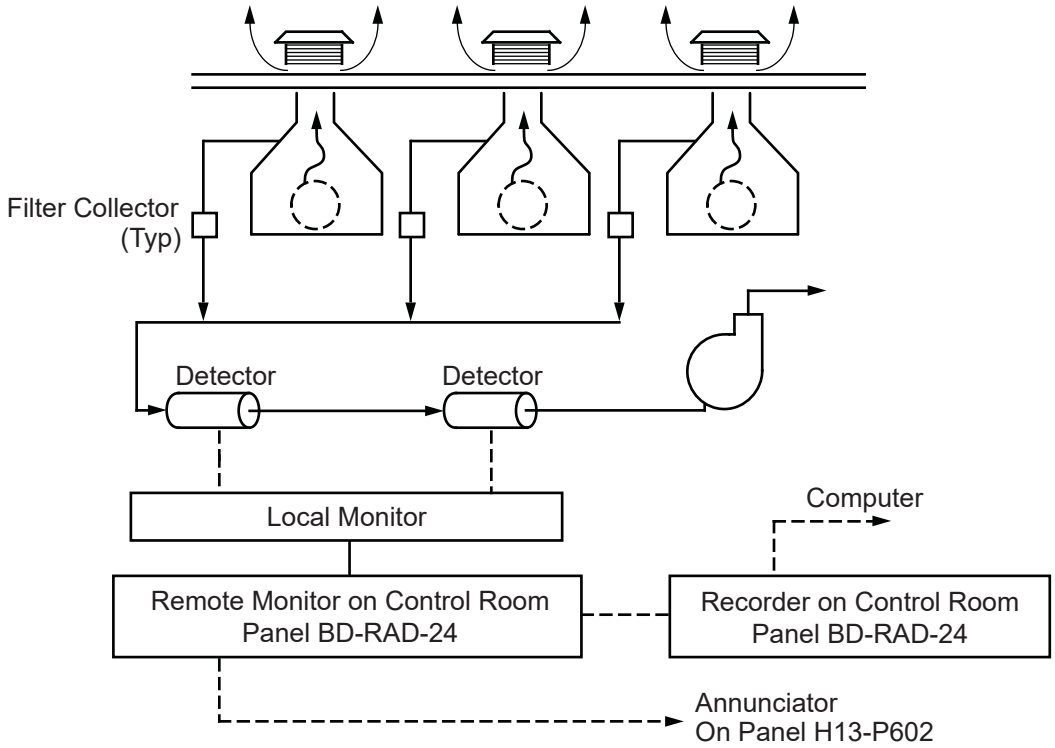

Columbia Generating Station Final Safety Analysis Report	Turbine and Radwaste Building Ventilation Release Duct Monitors		
	Draw. No. 960690.01	Rev. 1	Figure 11.5-7

DELETED

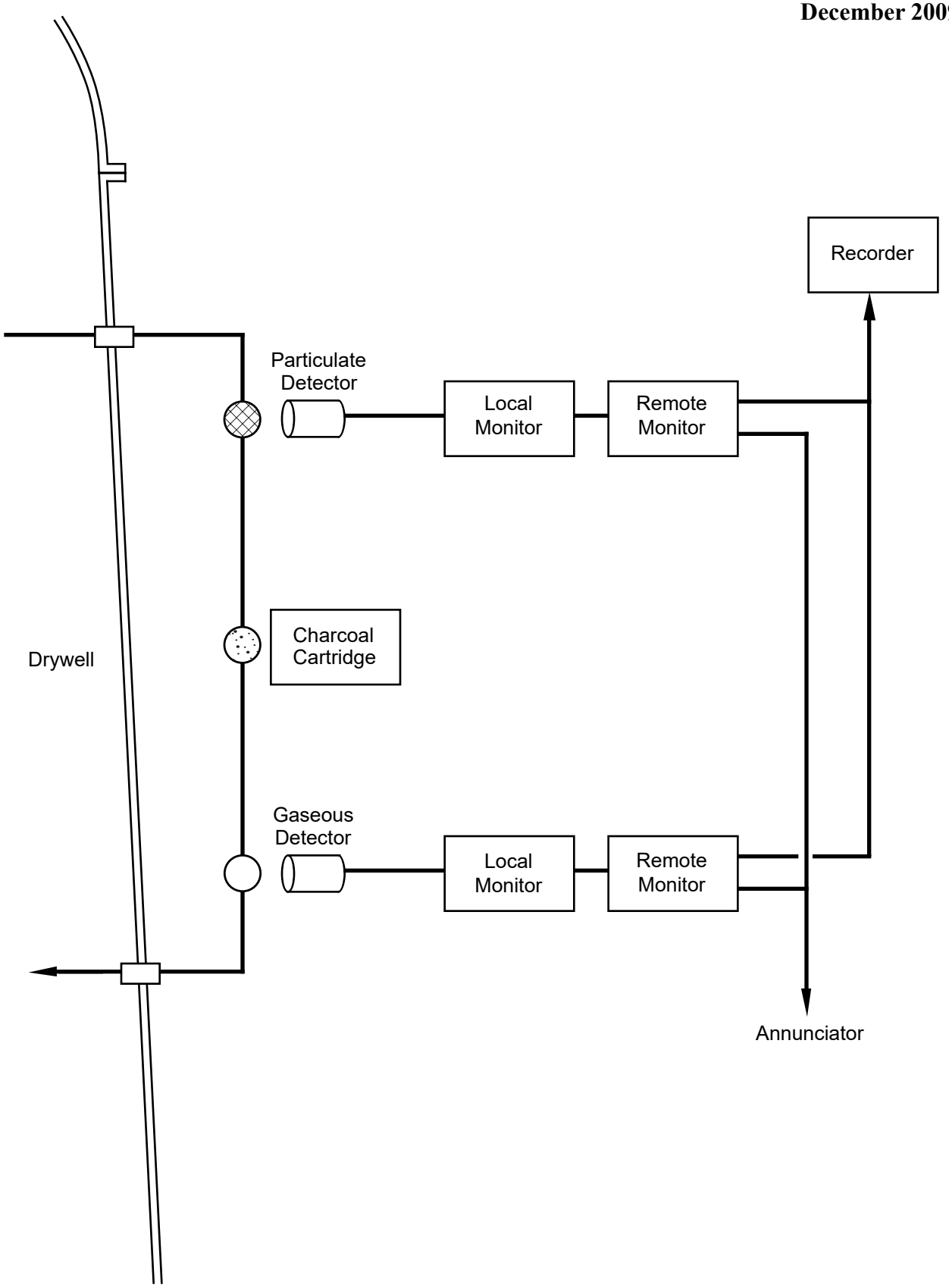

Columbia Generating Station Final Safety Analysis Report	Primary Containment Leak Detection Monitor		
	Draw. No. 970187.21	Rev.	Figure 11.5-9

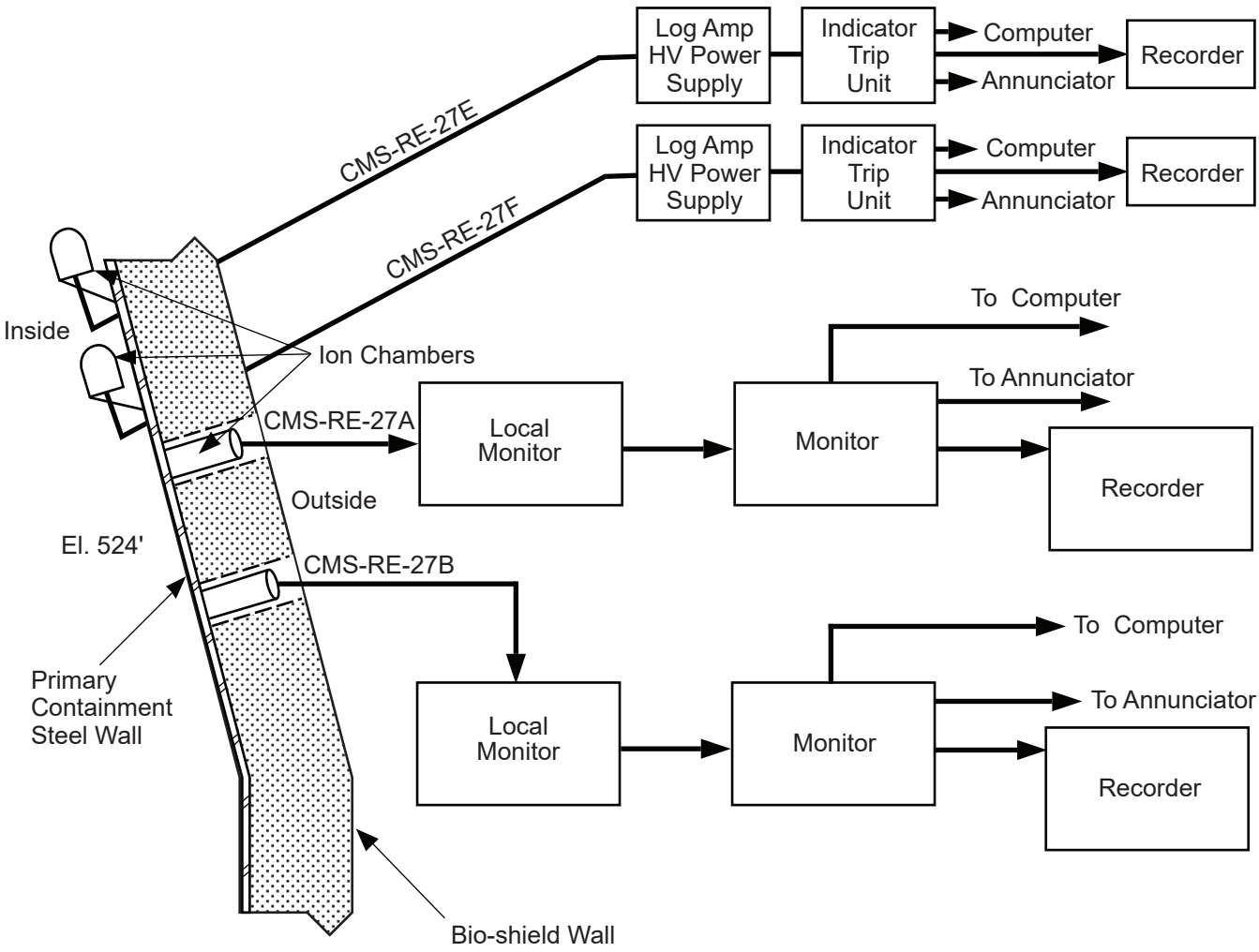

Columbia Generating Station Final Safety Analysis Report	Primary Containment and Elevated Release Stack LOCA Tracking		
	Draw. No. 950021.33	Rev.	Figure 11.5-10

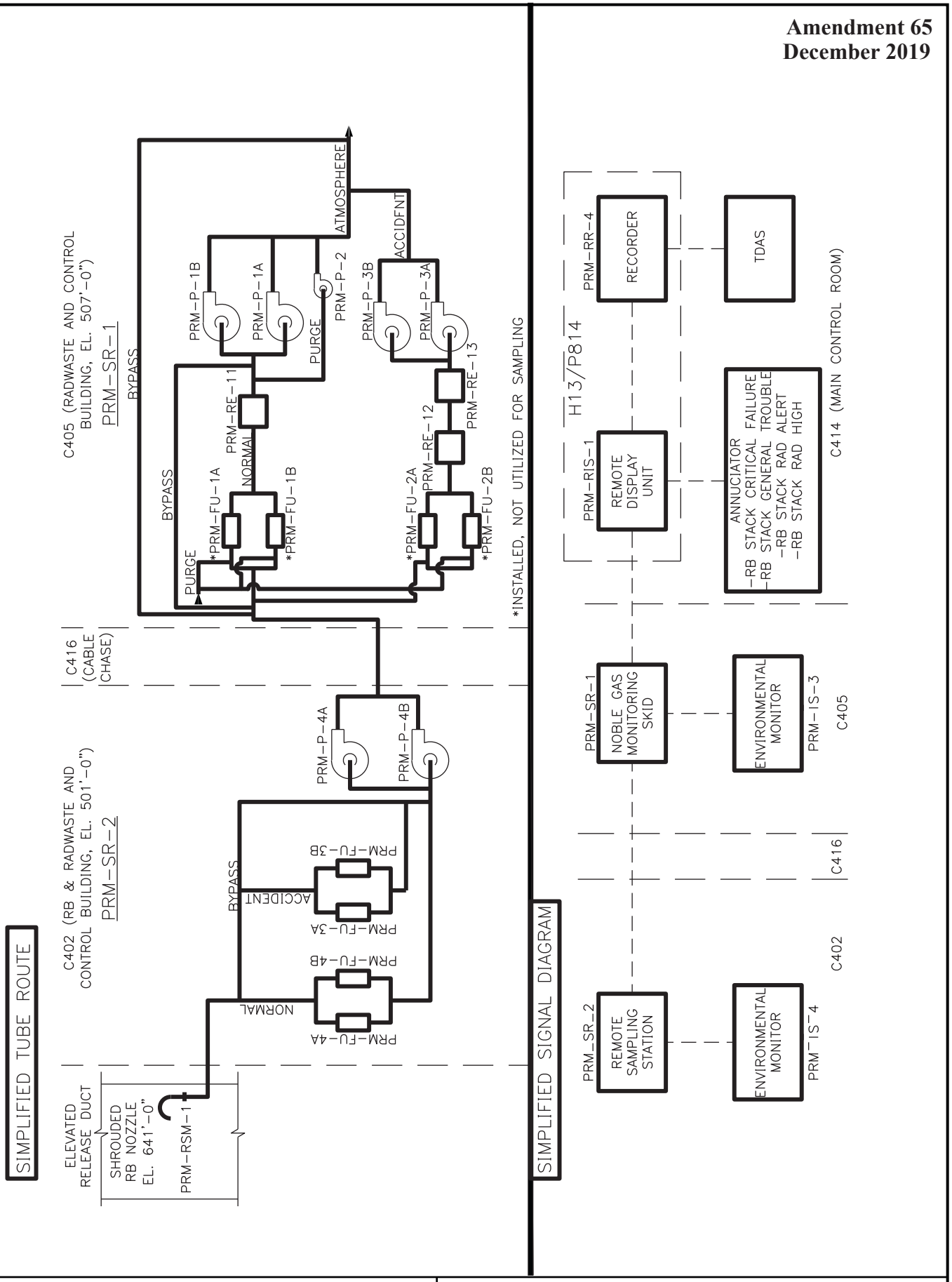

Columbia Generating Station Final Safety Analysis Report	Elevated Release Stack Monitoring and Sampling System (ANSI N13.1-1999 Compliant)		
	Draw. No. 190165.01	Rev.	Figure 11.5-11

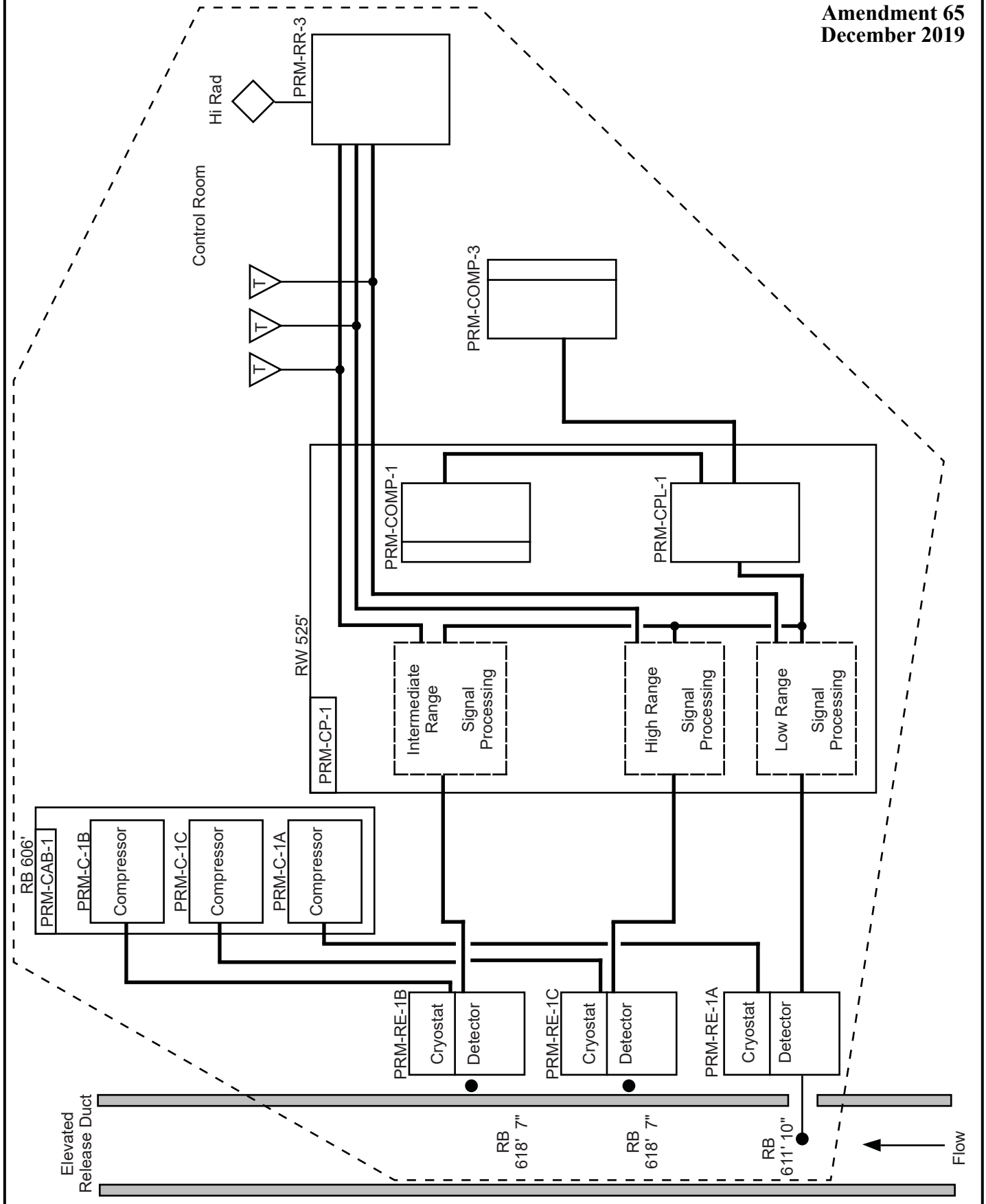

Columbia Generating Station
Final Safety Analysis Report

Elevated Release Stack LOCA Monitoring
Note: de-terminated; no longer in use

Draw. No. 950021.29	Rev.	Figure 11.5-11A

11.6 POSTACCIDENT SAMPLING SYSTEM

11.6.1 DESIGN BASIS

Columbia Generating Station is using a General Electric postaccident sampling system (PASS) capable of sampling the primary containment and reactor building atmosphere and of obtaining liquid samples from the reactor, RHR loops and various reactor building sumps. This system is designed to obtain grab samples which may be analyzed onsite or transported to offsite facilities for more detailed analysis if necessary. The sample station is located in the radwaste building and is shielded to reduce radiation exposure rates to the operator. All remote-operated valves are controlled from this area. Lead pigs are provided for radiation protection when transporting samples either to onsite facilities or offsite.

All valves used are fully qualified for the environment in which they are located inside and outside reactor containment. Power for the postaccident sampling equipment is supplied from Division 1 and Division 2 critical power sources and will be available during accident conditions.

License Amendment No. 184 removed the requirement for PASS from the Technical Specifications effective January 27, 2003. While this amendment removes the Technical Specification requirements for PASS, it requires a commitment for contingency plans for obtaining and analyzing highly radioactive samples from the Reactor Coolant System, suppression pool, and containment atmosphere. Until further changes are made to the PASS hardware it will be operated as described in this FSAR Section. This operation meets the commitment for contingency plans for sampling.

11.6.2 SYSTEM DESCRIPTION

Gas samples will be obtained from locations in the drywell, the suppression pool atmosphere, and from the secondary containment atmosphere. The sample system is designed to operate at pressures ranging from subatmospheric to maximum design pressures of the primary and secondary containment. Heat-traced sample lines are used outside the primary containment to prevent precipitation of moisture and resultant loss of particulates and iodines in the sample lines. The gas samples may be passed through a particulate filter and silver zeolite cartridge for determination of particulate activity and iodine activity by subsequent analysis of the samples on a gamma spectrometer system. Alternatively, the sample flow bypasses the particulate/iodine sampler, is chilled to remove moisture, and a 15-ml grab sample can be taken for determination of gaseous radioactivity and for gas composition by gas chromatography. This size sample vial has been adopted for all gas samples to be consistent with present offgas sample vial counting factors.

Reactor coolant samples will be obtained from two points in the jet pump pressure instrument system when the reactor is at pressure. The jet pump pressure system has been determined to

be an optimum sample point for accident conditions. The pressure taps are well protected from damage and debris. If the recirculation pumps are secured, the water level will be raised about 18 in. above normal. This provides natural circulation of the bulk coolant past the taps. Also, the pressure taps are located sufficiently low to permit sampling at a reactor water level even below the lower core support plate.

A single sample line is also connected to both loops in the RHR system. This provides a means of obtaining a reactor coolant sample when the reactor is depressurized and at least one of the RHR loops is operated in the shutdown cooling mode. Similarly, a suppression pool liquid sample can be obtained from the RHR loop lined up in the suppression pool cooling mode. Samples from the five drain sumps in the reactor building are also available.

The sample system isolation valves are controlled from the local control panel. The sample system is designed for a purge flow of 1 gpm, which is sufficient to maintain turbulent flow in the sample line. Purge flow is returned to the suppression pool. The high flush flow also serves to alleviate cross-contamination of the samples when switching from one sample point to another.

All liquid samples are taken into septum bottles mounted on sampling needles. The sample station is basically a bypass loop on the sample purge line. In the normal lineup, the sample flows through a conductivity cell (readable range 0.1 to 1000 μS/cm) and then through a ball valve bored out to 0.10-ml volume. Flow through the sample panel is established, the valve is rotated 90°, and a syringe is used to flush the sample plus a measured volume of diluent (generally 10 ml) through the valve and into the sample bottle. This provides a dilution of 100:1 to the sample. Alternatively, the valve sampling sequence can be repeated 10 times to provide a 1-ml sample diluted 10:1. The sample is transported to the laboratory for further dilution and subsequent analysis. Alternatively, the sample flow can be diverted through a 70-ml bomb to obtain a large pressurized volume. This 70-ml volume can be circulated and depressurized into a known volume gas expansion chamber. The pressure change in this chamber will be used to calculate the total dissolved gases in the reactor coolant. A grab sample of these gases may be taken through a septum port for subsequent analysis.
Ten milliliter aliquots of this degassed liquid can also be taken for on or offsite chemical analyses requiring a relatively large sample. A radiation monitor in the liquid sample enclosure monitors liquid flow from the sample station to provide immediate assessment of the sample activity level. This monitor also provides information as to the effectiveness of the demineralized water flushing of the sample system following sample operation. The control instrumentation is installed in two 2 ft x 2 ft x 6 ft high standard cabinet control panels. One panel contains the conductivity and radiation level readouts. Another control panel contains the flow, pressure and temperature indicators, and the various control valves and switches.

A graphic display panel, installed directly below the main control panel, shows the status of the pumps and valves at all times. The panel also indicates the relative position of the pressure

gauges and other items of concern to the operator. The use of this panel will improve operator comprehension and assist in trouble-shooting operation.

Appropriate sample handling tools, a gas sampler vial positioner and gas vial cask are available to the operator at the sampling station. The gas vial is installed and removed by use of the vial positioner through the front of the gas sampler. The vial is then manually placed down in the cask with the positioner which allows the vial to be maintained about 3 ft from the individual performing the operation.

The small-volume (10 ml) liquid sample is remotely obtained through the bottom of the sample station by use of the small-volume cask and cask positioner. The cask positioner holds the cask and positions the cask directly under the liquid sampler. The sample vial is manually raised within the cask to engage the hypodermic needles. When the sample vial has been filled, the bottle is manually withdrawn into the cask. The sample vial is always contained within lead shielding during this operation. The cask is then lowered and sealed prior to transport to the laboratory.

A large-volume cask and cask positioner is available for transporting large liquid samples. A 21-ml bottle is contained within a lead shielded cask. This sample bottle is raised from its location in the cask to the sample station needles for bottle filling. The sample station will only deliver 10 ml to this sample bottle. When filled, the bottle is withdrawn into the cask. The sample bottle is always shielded by 5 to 6 in. of lead when in position under the sample station and during the fill and withdraw cycles, thus reducing operator exposure.

The cask is transported to the required position under the sample station by a dolly cask positioner. When in position this cask is hydraulically elevated approximately 1.5 in. by a small hand pump for contact with the sample station shielding under the liquid sample enclosure floor. The sample bottle is raised, held, and lowered by a simple push/pull cable. The cask is sealed by a threaded top plug that inserts above the sample bottle. The weight of this large-volume cask is approximately 700 lb.

The particulate filters and iodine cartridges are removed via a drawer arrangement. The quantity of activity which is accumulated on the cartridges is controlled by a combination of flow orificing and time sequence control of the flow valve opening. In addition, the deposition of iodine is monitored during sampling using a radiation detector installed adjacent to the cartridge. These samples will hence be limited to activity levels which will normally not require shielded sample carriers to transport the samples to the laboratory.

Based on information developed by General Electric, Energy Northwest has developed plant-specific procedures for the determination of the extent of core damage under accident conditions using inplant radiation and hydrogen monitors. This meets the commitment for ability to determine fuel damage, postaccident.

Chapter 12

RADIATION PROTECTION

TABLE OF CONTENTS

Section Page

12.1 ENSURING THAT OCCUPATIONAL RADIATION EXPOSURES AND RADIATION EXPOSURES TO MEMBERS OF THE PUBLIC ARE AS LOW AS IS REASONABLY ACHIEVABLE (ALARA) 12.1-1
12.1.1 POLICY CONSIDERATIONS 12.1-1
12.1.2 DESIGN CONSIDERATIONS 12.1-4
12.1.3 OPERATIONAL CONSIDERATIONS 12.1-8
12.1.3.1 Procedures and Methods of Operation 12.1-8
12.1.3.2 Design Changes for ALARA Exposures 12.1-9
12.1.3.3 Operational Information 12.1-10

12.2 RADIATION SOURCES 12.2-1
12.2.1 CONTAINED SOURCES 12.2-1
12.2.1.1 General 12.2-1
12.2.1.2 Reactor and Turbine Building 12.2-1
12.2.1.2.1 Reactor Core Radiation Sources 12.2-1
12.2.1.2.2 Process System Radiation Sources 12.2-2
12.2.1.2.2.1 Introduction 12.2-2
12.2.1.2.2.2 Recirculation System Sources 12.2-2
12.2.1.2.2.3 Reactor Water Cleanup System Sources 12.2-3
12.2.1.2.2.4 Reactor Core Isolation Cooling System Source 12.2-3
12.2.1.2.2.5 Residual Heat Removal System Sources 12.2-3
12.2.1.2.2.6 Fuel Pool Cooling and Cleanup and System Sources 12.2-4
12.2.1.2.2.7 Main Steam and Reactor Feedwater Systems Sources 12.2-5
12.2.1.2.2.8 Offgas Sources in the Turbine Generator Building 12.2-5
12.2.1.2.2.9 Traveling In-Core Probe System Sources 12.2-6
12.2.1.2.2.10 Sources Resulting From Crud Buildup 12.2-6
12.2.1.3 Radwaste Building 12.2-6
12.2.1.4 Byproduct, Source, and Special Nuclear Materials 12.2-6
12.2.2 AIRBORNE RADIOACTIVE MATERIAL SOURCES 12.2-6
12.2.2.1 General 12.2-6
12.2.2.2 Model for Computing the Airborne Radionuclide Concentration in a Plant Area 12.2-7
12.2.2.3 Sources of Airborne Radioactivity 12.2-8
12.2.2.3.1 Effect of Leakage from Process Equipment in Radioactive Systems 12.2-8
12.2.2.3.2 Effect of Sumps, Drains, Tank and Filter Demineralizer Vents 12.2-10
12.2.2.3.3 Effect of Relief Valve Exhaust 12.2-11

Chapter 12

RADIATION PROTECTION

TABLE OF CONTENTS (Continued)

Section Page

12.2.2.3.4 Effect of Removing Reactor Pressure Vessel Head and Associated Internals 12.2-13
12.2.2.3.5 Effect of Sampling 12.2-13
12.2.2.3.6 Effect of Spent Fuel Movement 12.2-13
12.2.2.3.7 Effects of Solid Radwaste Handling Areas 12.2-14
12.2.2.3.8 Effects of Liquid Radwaste Handling Areas 12.2-14
12.2.3 REFERENCES 12.2-14

12.3 RADIATION PROTECTION DESIGN FEATURES 12.3-1
12.3.1 FACILITY DESIGN FEATURES 12.3-1
12.3.1.1 Radiation Zone Designations 12.3-1
12.3.1.2 Traffic Patterns 12.3-2
12.3.1.3 Radiation Protection Design Features 12.3-2
12.3.1.3.1 Facility Design Features 12.3-2
12.3.1.3.2 Design Features That Reduce Crud Buildup 12.3-6
12.3.1.3.3 Field Routing of Piping 12.3-7
12.3.1.3.4 Design Features That Reduce Occupational Doses During Decommissioning 12.3-7
12.3.1.4 Radioactive Material Safety 12.3-8
12.3.1.4.1 Materials Safety Program 12.3-8
12.3.1.4.2 Facilities and Equipment 12.3-9
12.3.1.4.3 Personnel and Procedures 12.3-9
12.3.1.4.4 Required Materials 12.3-10
12.3.2 SHIELDING 12.3-10
12.3.2.1 General 12.3-10
12.3.2.2 Methods of Shielding Calculations 12.3-11
12.3.2.3 Shielding Description 12.3-12
12.3.2.3.1 General 12.3-12
12.3.2.3.2 Reactor Building 12.3-12
12.3.2.3.3 Turbine Building 12.3-13
12.3.2.3.4 Radwaste Building 12.3-13
12.3.3 VENTILATION 12.3-13
12.3.4 IN-PLANT AREA RADIATION AND AIRBORNE RADIOACTIVITY MONITORING INSTRUMENTATION 12.3-16
12.3.4.1 Criteria for Necessity and Location 12.3-16
12.3.4.2 Description and Location 12.3-17

Chapter 12

RADIATION PROTECTION

TABLE OF CONTENTS (Continued)

Section — Page

12.3.4.3 Specification for Area Radiation Monitors 12.3-20
12.3.4.4 Specification for Airborne Radiation Monitors 12.3-21
12.3.4.5 Annuciators and Alarms 12.3-21
12.3.4.6 Power Sources, Indicating and Recording Devices 12.3-22
12.3.5 REFERENCES 12.3-22

12.4 DOSE ASSESSMENT 12.4-1
12.4.1 DESIGN CRITERIA 12.4-1
12.4.2 PERSONNEL DOSE ASSESSMENT BASED ON BWR OPERATING DATA 12.4-1
12.4.2.1 General 12.4-1
12.4.2.2 Personnel Dose from Operating BWR Data 12.4-2
12.4.2.3 Occupancy Factors, Dose Rates, and Estimated Personnel Exposures 12.4-2
12.4.3 INHALATION EXPOSURES 12.4-4
12.4.4 SITE BOUNDARY DOSE 12.4-4
12.4.5 REFERENCES 12.4-5

12.5 RADIATION PROTECTION PROGRAM 12.5-1
12.5.1 ORGANIZATION 12.5-1
12.5.2 EQUIPMENT, INSTRUMENTATION, AND FACILITIES 12.5-2
12.5.2.1 Criteria for Selection 12.5-4
12.5.2.2 Facilities 12.5-6
12.5.2.3 Equipment 12.5-8
12.5.2.4 Instrumentation 12.5-9
12.5.3 PROCEDURES 12.5-9
12.5.3.1 Personnel Control Procedures 12.5-9
12.5.3.2 As Low As Is Reasonably Achievable Procedures 12.5-10
12.5.3.3 Radiological Survey Procedures 12.5-12
12.5.3.4 Procedures for Radioactive Contamination Control 12.5-13
12.5.3.5 Procedures for Control of Airborne Radioactivity 12.5-14
12.5.3.6 Radioactive Material Control Including Special Nuclear Materials (SNM) 12.5-15
12.5.3.7 Personnel Dosimetry Procedures 12.5-16
12.5.3.8 Radiation Protection Surveillance Program 12.5-18

Chapter 12

RADIATION PROTECTION

LIST OF TABLES (Continued)

Number	Title	Page
12.2-1	Basic Reactor Data for Source Computations	12.2-17
12.2-2	Neutron Flux at Reactor Core-Reflector Boundary	12.2-18
12.2-3	Reactor Core Gamma Ray Energy Spectrum During Operation	12.2-19
12.2-4	Reactor Core Gamma Ray Spectrum Immediately After Shutdown	12.2-20
12.2-5	Fission Product Source in RHR Piping and Heat Exchangers 4 Hours After Shutdown	12.2-21
12.2-6	Gamma Ray Energy Spectrum for Spent Fuel Sources	12.2-22
12.2-7	Nitrogen-16 Source Strength in Main Steam and Reactor Feedwater	12.2-23
12.2-8	Gamma Ray Energy Spectrum and Volumetric Source Strength in the Hotwell	12.2-24
12.2-9	Nitrogen -16 Source Strength in Feedwater Heater 6	12.2-25
12.2-10	Nitrogen -16 Source Strengths for Piping Associated With the Main Steam and Reactor Feedwater Systems	12.2-26
12.2-11	Offgas System Sources in the Turbine Generator Building	12.2-27
12.2-12a	Special Sources With Strength Greater Than 100 Millicuries	12.2-28
12.2-12b	Radioactive Material Use and Storage Areas Outside the Main Radiologically Controlled Area	12.2-28a
12.2-13	List of Radioactive Piping and System Designations	12.2-29
12.2-14	Airborne Radionuclide Concentration in Control Rod Drive Pump Area (el. 422 ft. 3 in. reactor building)	12.2-30

Chapter 12

RADIATION PROTECTION

LIST OF TABLES (Continued)

Number	Title	Page
12.2-15	Airborne Radionuclide Concentration in Condensate Pump Area (el. 441 ft. 0 in. turbine generator building)	12.2-31
12.2-16	Airborne Radionuclide Concentration in Secondary Containment from a Main Steam Relief Valve Blowdown	12.2-32
12.2-17	Airborne Radionuclide Concentration in Liquid Radwaste Handling Area	12.2-33
12.3-1	Area Monitors	12.3-25
12.3-2	Maximum Design Basis Background Radiation Level for Area Monitors	12.3-27
12.4-1	Summary of Occupational Dose Estimates	12.4-7
12.4-2	Occupational Dose Estimates During Routine Operations and Surveillance	12.4-8
12.4-3	Occupational Dose Estimates During Nonroutine Operations and Surveillance	12.4-11
12.4-4	Occupational Dose Estimates During Routine Operations and Surveillance	12.4-12
12.4-5	Occupational Dose Estimates During Waste Processing	12.4-13
12.4-6	Occupational Dose Estimates During Refueling	12.4-14
12.4-7	Occupational Dose Estimates During Inservice Inspection	12.4-15
12.4-8	Occupational Dose Estimates During Special Maintenance	12.4-16
12.4-9	Summary of Annual Information Reported by Commercial Boiling Water Reactors	12.4-17
12.5-1	Health Physics Instrumentation	12.5-21

Chapter 12

RADIATION PROTECTION

LIST OF FIGURES

Number	Title
12.3-1	DELETED
12.3-2	DELETED
12.3-3	DELETED
12.3-4	DELETED
12.3-5	Radiation Zones - Turbine Generator Building
12.3-6	Radiation Zones - Ground Floor Plan - Turbine Generator Building
12.3-7	Radiation Zones - Mezzanine Floor Plan - Turbine Generator Building, East Side
12.3-8	Radiation Zones - Mezzanine Floor Plan - Turbine Generator Building, West Side
12.3-9	Radiation Zones - Operating Floor Plan - Turbine Generator Building, East Side
12.3-10	Radiation Zones - Operating Floor Plan - Turbine Generator Building, West Side
12.3-11	Radiation Zones - El. 437 ft 0 in. Radwaste Building
12.3-12	Radiation Zones - El. 467 ft 0 in. and Partial Plans Radwaste Building
12.3-13	Radiation Zones - El. 484 ft 0 in. and 487 ft 0 in., and Partial Plans Radwaste Building
12.3-14	Radiation Zones - El. 501 ft 0 in., 507 ft 0 in., and 525 ft 0 in. Radwaste Building
12.3-15	Radiation Zones - El. 422 ft 3 in., 441 ft 0 in., and 440 ft 0 in. Reactor Building
12.3-16	Radiation Zones - El. 471 ft 0 in. and 501 ft 0 in. Reactor Building
12.3-17	Radiation Zones - El. 522 ft 0 in. and 548 ft 0 in. Reactor Building
12.3-18	Radiation Zones - El. 572 ft 0 in. and 606 ft 10-1/2 in. Reactor Building

Chapter 12

RADIATION PROTECTION

LIST OF FIGURES (Continued)

Number	Title
12.3-19	Arrangement of Filtration and Demineralization Equipment (Typical)
12.3-20	Schematic Arrangement of the Cooler Condenser Loop Seal
12.3-21	Decontamination Concentrator Steam Supply Arrangement
12.3-22	Entombment Structure
12.3-23	Layout of the Standby Gas Treatment System Filter Units
12.3-24	Block Diagram - Area Radiation Monitoring System

Chapter 12

RADIATION PROTECTION

12.1 ENSURING THAT OCCUPATIONAL RADIATION EXPOSURES AND RADIATION EXPOSURES TO MEMBERS OF THE PUBLIC ARE AS LOW AS IS REASONABLY ACHIEVABLE (ALARA)

12.1.1 POLICY CONSIDERATIONS

Energy Northwest is committed to maintaining occupational and public radiation exposures as far below regulatory dose limits as is practical while performing all activities related to the operation of Columbia Generating Station (CGS) and the Independent Spent Fuel Storage Installation (ISFSI). This commitment is reflected in the Radiation Protection Program (RPP) that meets the requirements of 10 CFR 20 and provides for effective control of radiation exposure through

a. Management direction and support,

b. Establishment of radiation control procedures,

c. Consideration during design and modification of facilities and equipment, and

d. Development of good radiation control practices, including preplanning and the proper use of appropriate equipment by qualified, well trained personnel.

The radiation protection practices are based, when practicable and feasible, on Regulatory Guides 8.8, Revision 3, and 8.10, Revision 1. The Radiation Protection Program provides for the majority of the recommended actions in both regulatory guides, including the following:

a. Organization and position descriptions to ensure an adequate as low as is reasonably achievable (ALARA) program,
b. Exposure reduction program,
c. Cost-benefit analysis program, and
d. Exposure tracking program employing the "Radiation Work Permit."

Procedures for personnel radiation protection are prepared consistent with the requirements of 10 CFR Part 20 and are approved, maintained, and adhered to for all operations involving personnel radiation exposure.

Energy Northwest organization is structured to provide assurance that the ALARA policy is effective in the areas described above. The following is a description of the applicable activities conducted by individuals or groups having responsibility for radiation protection.

a. The Plant General Manager, has the overall responsibility for approving the RPP and ALARA policy consistent with Energy Northwest and regulatory requirements, and for the radiological safety of all on-site personnel. This includes the responsibility for implementation of the ALARA program by plant staff. The Plant General Manager has ensured consideration of exposure reduction methods by adoption of the ALARA review practices described in Section 12.1.3. The Plant General Manager is responsible for the management of plant operational activities and for providing the Chemistry/Radiological Services Director the resources and support necessary to implement the RPP. This includes the responsibility for ensuring that the ALARA program is not adversely affected by production oriented goals;

b. The Chemistry/Radiological Services Director reports to the Plant General Manager and is responsible for implementing the RPP. This position meets the requirements of the Radiation Protection Manager (RPM) as described in Reg Guide 1.8. This individual provides organizational leadership and direction to the Radiation Protection department;

c. The Chemistry/Radiological Services Director has direct access to the Plant General Manager in all matters relating to radiation safety, and has the responsibility and authority for ensuring that plant activities meet applicable radiation safety regulations and RPP requirements. Specific responsibilities are provided in Section 12.5.1;

d. The Radiological Operations Supervisor reports to the Chemistry/Radiological Services Director. This individual provides supervision, leadership, and technical direction for implementation of the RPP;

e. The Health Physics (HP) Craft Supervisors report to the Radiological Operations Supervisor and implement the RPP through direct supervision of the plant HP Technicians. Areas of responsibility include characterization of plant radiological conditions, maintenance of radiological postings, detection and evaluation of radiological problems, and performance of facility and equipment decontamination, system flushes, and temporary shielding installation;

f. The Assistant Chem/RP Manager reports to the Chemistry/Radiological Services Director and is responsible for radiation exposure reduction and for providing technical support to the Radiation Protection organization. This is accomplished, in part, by providing input to the planning and coordination of plant activities. The Assistant Chem/RP Manager makes recommendations

for the control/elimination of radiological conditions that increase personnel exposure or the release of radioactivity; and provides additional assurance that regulatory requirements and industry guidance are incorporated into the program to ensure exposures are maintained ALARA.

In addition to the organization structure that has been provided for implementation of the ALARA policy, the following groups perform reviews to further ensure exposures are ALARA.

a. The Plant Operations Committee (POC) has been established and is functional. Its purpose is to serve as a review and advisory organization to the Plant General Manager in several areas including nuclear safety. A written administrative procedure describes the responsibilities of the POC. The RPM is a member of the POC and has direct input to this group on all radiological matters;

b. The Quality organization performs audits, surveillances, and assessments of plant operations. Audits, surveillances, and assessments will include verification of compliance with plant procedures, with regulations involving nuclear safety, and with operating license provisions. Results of these audits and surveillances will be submitted to both plant and corporate management. Since the system for ALARA review described in Section 12.1.3 provides for this consideration in all plant procedures, quality audits and surveillances will verify implementation of this principle;

c. The Quality organization provides a continuing appraisal of the ALARA policy. The Operational Quality Assurance Program Description (OQAPD) provides a description of this group's responsibilities and authority. By its charter, the Quality organization reviews radiological safety policies and programs and determines that these policies and programs are in compliance with NRC requirements. The Quality organization has the capacity for review in the area of radiological safety and has established a direct line of communication with plant management; and

d. The Senior Site ALARA Committee serves as a review and advisory organization to the Plant General Manager on radiological safety, including occupational exposure to personnel. Committee membership, responsibilities, authorities, and records are prescribed in plant procedures.

The commitment to ALARA is implemented by employee training; audits, assessments, and reviews of the program; procedure development and reviews; enforcement of rules; and modifications to plant equipment or facilities where they will substantially reduce exposures at a reasonable cost. Management's commitment to the ALARA policy is further discussed in Section 12.5. This program meets all 10 CFR Part 20 regulations and considers the guidance of Regulatory Guides 8.8 and 8.10 in regard to policy considerations.

12.1.2 DESIGN CONSIDERATIONS

To ensure that personnel occupational radiation exposures are ALARA, extensive consideration is given to equipment design and locations, accessibility requirements, and shielding requirements. Many of these design objectives and considerations were established prior to the issuance of Regulatory Guide 8.8. However, the design of the plant substantially incorporates the recommendations provided in the regulatory guide. Design considerations that ensure occupational radiation exposures to personnel during normal operation and anticipated operational occurrences are ALARA are the following:

a. The facility is separated into controlled and uncontrolled areas based on anticipated radiation levels. The controlled areas of the facility are further defined by radiation zones established by personnel access requirements and are intended to limit radiation exposure to ALARA. The radiation zones provide guidance for the shielding design, contamination control, and ventilation flow pattern for the areas of anticipated personnel radiation exposure. See Section 12.3.1 for a description of the facility radiation zones.

b. Equipment location

   1. Several radiation sources on the 437 ft 0 in. level of the radwaste building are located with two sources in each cubicle. This arrangement maintains occupational exposures ALARA by use of the following alternate ALARA methods.

      The waste collector tank and floor drain collector tank are in the same cubicle. These tanks share redundant pumps and cross tie piping. If abnormal conditions occur and one or both of these tanks becomes a major source of radiation, either one of the pumps can be used to empty the tanks prior to any maintenance.

      The chemical waste tank and distillate tank share the same cubicle. These tanks are not expected to be major sources of radiation. Based on the source terms described in Table 11.2-1, the dose rate at 3 ft from the surface of these tanks normally does not exceed 0.1 mrem/hr. In

addition, redundant pumps and cross tie piping permit the transfer of tank contents should abnormally high radioactivity levels occur.

Gas coolers and charcoal adsorbers share the same cubicle. These items have no moving parts and are highly reliable with no routine maintenance requirements. In addition, system redundancy and remote isolation capabilities eliminate the need for prompt entry into the cubicle. This permits the noble gases and radioiodines to significantly decay prior to entry.

Placing the preceding sources in shared cubicles does not result in increased occupational exposures.

2. Radioactive pipes are routed so that radiation exposure to plant personnel is minimized. The extent to which radioactive pipes are routed through normally accessible areas is minimized. Shielded pipe chases are utilized in normally accessible areas. Whenever possible, radioactive and nonradioactive pipes are kept separate for maintenance purposes.

3. Shielded valve stations are used where practical. To further minimize personnel exposure, remotely operated valves are used where practical. Normally operated manual valves in high radiation areas are provided with extension stems through a shield wall to a low radiation area.

4. Where practical, pumps are located in shielded areas outside cubicles containing radioactive components.

5. Where practical, local instrumentation readouts are routed to points outside shielding walls.

6. To minimize maintenance time and hence exposure, sufficient space is available in shield cubicles housing radioactive equipment (e.g., heat exchangers, demineralizers, etc.) to perform required tasks. Access platforms at intermediate levels are provided to enhance access to portions of equipment inaccessible from the floor.

7. Where possible, equipment and components which require frequent servicing are designed so that they can be removed, with minimum exposure, to appropriate low radiation areas.

8. Access to corridor C-125 on the 437 ft 0 in. level of the radwaste building will only be required for routine surveillance of equipment and nonroutine maintenance. Area radiation monitors 28 and 29 are located

in the corridor to detect abnormal radiological conditions and warn personnel if radiation levels are excessive. During reactor and radwaste operations, entry to this area will be under the direction of a Radiation Work Permit (RWP).

c. Shielding design is based on satisfying the radiation zone requirements utilizing design basis radiation sources for the shielding calculations. Shielding design is conservative since the design basis radiation sources are not expected to occur frequently.

Penetrations through radiation shields are generally designed to prevent direct radiation streaming from a high radiation area to a low radiation area. Shielding discontinuities, such as shield plugs, are provided with offsets to reduce radiation streaming. Shield doors and labyrinths are used to eliminate radiation streaming through access openings in the cubicles.

d. Auxiliary systems that may become contaminated are designed with provisions for flushing or remote chemical cleaning prior to maintenance. This is accomplished by the following:

1. Providing connections for the purpose of backflushing,

2. Providing water connections to tanks containing spargers to allow for water injection to uncake contaminants, and

3. Providing cross ties between redundant equipment and/or related equipment capable of redundant operation to allow removal of contaminated equipment from service.

e. The ventilation systems are designed to ensure control of airborne contaminants by providing air flow from areas of low radioactivity potential to areas of high radioactivity potential. Access to the systems is facilitated by the following:

1. Filter access doors, which are sized to enhance the ease of performing maintenance, and

2. Providing for periodic inservice testing of the equipment and filters.

f. Spread of contamination is minimized in the event spillage occurs by the following:

1. Drains are provided in areas where equipment with large volumes of radioactive fluid is located. Drains are sized to conduct spillage to the appropriate liquid waste processing system;

2. Floors and walls are protected with the appropriate coating to facilitate decontamination; and

3. An equipment decontamination facility is provided to decontaminate tools and radioactive components.

g. While pipe runs are not sloped, those that carry radioactive fluids can be chemically decontaminated. Tank bottoms in the radwaste system are either sloped or dished. The exception is the waste surge tank located on el. 437 ft 0 in. level in the radwaste building.

h. Drain tap-offs are provided at low points in the piping systems.

i. Connections are placed above the centerline (top) of pipes when consistent with overall design requirements. Such connections are not always practical or desirable. For example, air pockets may form in an infrequently used line which is connected above the centerline (top) of another pipe.

j. Where practicable, the use of dead legs and low points in pipe systems are avoided, especially in pipes carrying demineralizer resins or concentrated radwaste.

k. T-connections in piping are minimized with the exception of

1. Multiple flow paths, such as in the condensate filter demineralizer system, and

2. Interconnected systems acting as mutual back ups, such as the floor drain and waste filter demineralizer systems.

l. Large pipe bend radii and piping elbows are used.

m. Butt welding by the open root method is used as described in Section 12.3.1.3.2.

n. Seal glands of pumps carrying concentrated radwaste or spent filter and demineralizer resins are flushed with condensate water during operation. After operation, the pumps are also flushed with condensate. Canned pumps are not used.

o. Where practicable, equipment used in the same process are located close together, resulting in short runs of interconnecting piping.

p. Pipes carrying slurries and resins are sized for turbulent flow to prevent any settling out of solids.

q. All equipment cubicles housing filters are equipped with removable ceiling plugs through which filter elements may be serviced or changed with the aid of tools to allow remote handling.

r. Operating experience from other BWR plants is periodically reviewed. Problems are reviewed and the plant design is checked to ensure that similar problems will not occur.

s. Design changes are reviewed by Radiation Protection.

12.1.3 OPERATIONAL CONSIDERATIONS

12.1.3.1 Procedures and Methods of Operation

A positive means of ensuring that occupational and public radiation exposures are ALARA has been incorporated into the Plant Procedures Manual (PPM) and Procedure Program. Procedures are formally reviewed for ALARA considerations as part of the approval process. The guidance provided by Regulatory Guide 8.8 is considered during this review. Additional information regarding ALARA considerations in procedures is provided in Section 12.5.3.2.

In addition to the above process, the Radiation Work Permit (RWP) process is used for individual tasks to identify radiological conditions and controls. This provides a means of prescribing precautionary measures, protective equipment, and other exposure reduction methods in each situation. Individual exposures, as determined by dosimeters, are recorded and provide a means of determining exposures for various tasks and work groups. This information is used for preplanning work, identifying sources, determining radiation levels and otherwise evaluating exposure problems.

Administrative controls ensure that occupational and public radiation exposures are as low as reasonably achievable. These are supplemented by the Radiation Protection staff through a

program of surveillance, guidance, and investigation. A description of the program is outlined in Section 12.5 and includes the following aspects:

a. The Energy Northwest RPP includes procedures that provide for routine and special survey to determine sources and trends of exposure and for investigation to determine causes of normal and unusual exposure;

b. Plant procedures are formally reviewed by Radiation Protection for ALARA considerations when required;

c. Plant modifications that have radiological implications are reviewed by Radiation Protection to ensure that the changes incorporate ALARA considerations;

d. All maintenance tasks that involve radiological systems or controls are initially reviewed for ALARA and radiological concerns. For these tasks, a RWP is completed which describes the proposed actions. The RWP describes the conditions necessary such as survey requirements, surveillance, and protective apparel;

e. Prior to each scheduled maintenance and refueling outage, HP reviews the outage tasks and schedules and participates in outage planning for ALARA considerations; and

f. Adequate surveillance and supervision is provided to ensure that procedures are followed, prescribed precautions are taken, and radiation sources are identified.

12.1.3.2 Design Changes for ALARA Exposures

Operational requirements were considered in the original design of CGS for maintaining occupational exposures ALARA, and several design changes have been made since issuance of the PSAR and Regulatory Guide 8.8. These changes or additions were implemented as a result of review by both the architect-engineer and Energy Northwest personnel and include the following:

a. Revised offgas system valve design to prevent release of radioactive gases to building atmosphere,

b. Relocation of the counting room for lower background levels and adequate shielding,

c. Revised effluent monitoring capabilities to provide for more efficient monitoring,

d. Increased capability for in-plant continuous airborne radioactivity monitoring with remote readout and recording features,

e. Increased capability for the area radiation monitoring system to include remote readout/alarm and local alarm functions for the individual monitors,

f. Inclusion of supplied air stations throughout the plant for efficient respiratory protection,

g. Space and services provisions made for a decontamination facility and hot shop to reduce contact maintenance exposures and airborne radioactivity,

h. Revised penetration access design at sacrificial shield wall to reduce time required in this area,

i. Installation of overload protection on valve motor operators to minimize motor replacement in high dose rate areas,

j. Generated additional specification for replacement valve packing for selected valves to reduce time consumed in repacking,

k. Replaced hydraulic snubbers with mechanical snubbers to reduce maintenance requirements,

l. Provided method of venting the reactor vessel head through main steam line A to be ultimately filtered through the offgas system via the condenser, and

m. Made provisions for future connections to increase reactor water cleanup capacity during shutdown conditions to reduce radioiodine and particulate activity prior to vessel head removal and during outage periods.

New designs or design revisions are considered for exposure reduction as plant operation identifies problem areas.

12.1.3.3 Operational Information

Information from operating BWRs has been incorporated into the Radiation Protection procedures as discussed below:

a. Procedures have been written using guidance obtained from BWR operational experience reviews, from technical information obtained at power reactor conferences, and from participational experience in outages at operating BWRs;

b. Respiratory protection procedures incorporate proven practices from other nuclear facilities;

c. Typical procedures on survey methods, personnel monitoring, personnel dosimetry, and process/effluent radiological monitoring have been observed in the implementation stage at several operating reactor facilities. In addition, the procedures used at operating BWR plants have been reviewed. All of these were evaluated and applied in the procedure generating process;

d. Specific HP procedures or instructions have been written to furnish guidance on the following:

1. The issuance, requirements, conditions, and controls of RWPs,

2. The review process of plant procedures for ALARA considerations, and

3. Methods for minimizing personnel exposures during RPV head removal, drywell entry, and conduct during emergencies.

12.2 RADIATION SOURCES

12.2.1 CONTAINED SOURCES

12.2.1.1 General

The design basis radiation sources considered are the following:

a. The reactor core,

b. Activation of structures and components in the vicinity of the reactor core,

c. Radioactive materials (fission and corrosion products) contained in system components,

d. Spent fuel, and

e. Radioactive wastes for offsite shipment.

The design basis process radiation sources used for shielding are based on the source terms given in Tables 11.1-1 through 11.1-5.

12.2.1.2 Reactor and Turbine Building

The reactor building sources include the following:

a. The reactor core,

b. Activated structures and components,

c. Components and equipment containing activation, fission, and corrosion products, and

d. Spent fuel.

12.2.1.2.1 Reactor Core Radiation Sources

During normal power operation, the reactor core radiation sources considered are the prompt fission neutrons and gamma rays, capture gamma rays, and fission product gamma rays. During shutdown, the reactor core radiation sources are the fission product gamma rays. The core is treated as a cylindrical volume source for use in the NRN+(1) and QAD+(2) codes. See Section 12.3.2 for details.

Table 12.2-1 lists the basic data required for reactor core source computations including volume fractions, power peaking factors, and core power density.

Table 12.2-2 presents the neutron multigroup flux at the reactor core-reflector boundary, 238 cm from the core centerline. The NRN computer code (Reference 12.2-1) is used in computing the flux. This code is based on a multigroup slowing down and diffusion system with the deep penetration source corrected by a multigroup removal source.

Table 12.2-3 lists the gamma ray energy spectrum for the reactor core during normal operation. The operating core energy spectrum represents the sum of the spectra for prompt fission, fission product, and to capture gamma rays. The postoperation fission product gamma ray energy spectrum in the core immediately after shutdown is listed in Table 12.2-4.

12.2.1.2.2 Process System Radiation Sources

12.2.1.2.2.1 Introduction. The following process systems govern the shielding requirements within the reactor and turbine buildings:

a. Recirculation (RRC),
b. Reactor water cleanup (RWCU),
c. Reactor core isolation cooling (RCIC),
d. Residual heat removal (RHR),
e. Fuel pool cooling and cleanup (FPC),
f. Main steam (MS) and the reactor feedwater system (RFW),
g. Traveling in-core probe (TIP), and
h. Offgas system (OG).

The locations of the equipment, which are part of these systems, are shown on the radiation zone drawings, Figures 12.3-5 through 12.3-18.

12.2.1.2.2.2 Recirculation System Sources. The coolant activation products, principally ^{16}N, are the dominant sources of radiation in the RRC system during normal operation. The ^{16}N introduced into this system decays significantly by the time it returns to the core. Therefore, decay is considered in the portions of this system where elapsed transit time is significant.

For shielding purposes, the pipes in the RRC system are treated as equivalent line sources. The ^{16}N source strength in these lines varies from 0.10 Ci/cm at the line from the reactor vessel to 0.02 Ci/cm at the header which distributes coolant flow back to the reactor. These sources are located within the drywell of the primary containment of the reactor building, from approximately el. 501 ft to el. 540 ft.

During shutdown, fission products become the dominant source. This shutdown source is considerably less than that of ^{16}N during normal operation. Shielding design is based on the ^{16}N source, which is more than adequate to shield against the fission product shutdown source.

12.2.1.2.2.3 Reactor Water Cleanup System Sources. The major sources of radiation in the portions of the RWCU system in the reactor building during normal operation are the coolant activation products, principally ^{16}N. The ^{16}N source strength (given in activity per unit length of line) in the RWCU system ranges from 1.00×10^{-3} Ci/cm in the lines flowing into the cleanup recirculation pumps to 4.68×10^{-8} Ci/cm at the exhaust of the tube side of the nonregenerative heat exchanger. Returning from the radwaste building, the ^{16}N source strength ranges from 3.08×10^{-10} Ci/cm to negligible (less than 10^{-14} Ci/cm).

The ^{16}N source strengths in the regenerative and nonregenerative heat exchangers are

a. Tube side of the regenerative heat exchanger: 2.69×10^{-6} Ci/cm^3,
b. Tube side of nonregenerative heat exchanger: 6.24×10^{-8} Ci/cm^3, and
c. Shell side of the regenerative heat exchanger: 1.70×10^{-14} Ci/cm^3.

These heat exchangers are treated as cylindrical sources for input into the QAD computer program (see Section 12.3.2). The portions of this system located in the radwaste building are discussed in Chapter 11. The RWCU pumps are located at el. 522 ft 0 in. and the RWCU regenerative and nonregenerative heat exchangers are located at el. 548 ft 0 in.

During shutdown, the fission products are the dominant radiation source. Since the shielding is designed to shield against the ^{16}N source during normal operation, it is more than adequate to shield against the shutdown fission product source.

12.2.1.2.2.4 Reactor Core Isolation Cooling System Source. The dominant source of radioactivity in the RCIC system is the ^{16}N present in the main steam used to drive the RCIC turbine. This ^{16}N source occurs when the RCIC turbine is tested. The shielding design is based on this source. The transit time is assumed to be negligible in this system.

The resulting ^{16}N activity (given in activity/unit length of line) in the inlet line is 2.96×10^{-4} Ci/cm and in the outlet line, it is 6.57×10^{-5} Ci/cm. These sources are treated as equivalent line sources for shielding purposes.

The RCIC turbine source strength is 8.44×10^{-2} Ci of ^{16}N. It is treated as a point source since the distance to the dose points is much greater than the turbine dimensions. The RCIC pump and turbine is located at el. 422 ft 3 in. of the reactor building.

12.2.1.2.2.5 Residual Heat Removal System Sources. The RHR system radiation sources consist of the fission and corrosion products. Table 12.2-5 lists the gamma ray energy

spectrum of the radionuclides in the RHR pumps, pipes, and heat exchangers 4 hr after shutdown. These sources are based on the RHR system operating in the normal reactor shutdown cooling mode. The fission and corrosion product isotope concentrations used are listed in Tables 11.1-2 through 11.1-4.

The RHR heat exchangers are located approximately from el. 559 ft 0 in. to el. 589 ft 0 in. on the west side of the reactor building. The RHR pumps are located at el. 422 ft 3 in. on the west side of the reactor building.

The pipes in this system are treated as equivalent line sources. The heat exchangers are treated as cylindrical sources.

12.2.1.2.2.6 Fuel Pool Cooling and Cleanup and System Sources. The primary sources of radioactivity in the spent fuel assemblies, which are stored in the fuel pool, are the fission products. Table 12.2-6 lists the gamma ray energy spectrum for the spent fuel sources for shutdown time of 2 days. The refueling area is located at el. 606 ft 10.5 in. in the reactor building.

These source terms are calculated using the Perkins and King data (Reference 12.2-2). The shielding calculations are done using the QAD point kernel code (Reference 12.2-3). The following assumptions are used in determining the shielding requirements:

a. After radioactivity has reached equilibrium in the fuel assemblies, it is assumed that the reactor is shut down and the whole core is moved, within 2 days, into the spent fuel pool;

b. The whole core and another one-fourth of a core from the last refueling are located by the north wall of the spent fuel pool to give the most conservative dose rate on the outside of the wall. Less water exists between the assembly racks and the north wall than between the assembly racks and any other side of the pool. The assemblies from past refuelings do not add to the shielding requirements because they have decayed for more than 1 year, they are shielded by pool water, and they provide self shielding; and

c. The water, racks, spent fuel, and other constituents that are located within the array of spent fuel assemblies are homogenized for the purpose of determining the required values of the linear attenuation coefficients.

The minimum depth of water needed to adequately shield the refueling area from the spent fuel assemblies is calculated. It is found that the elevated fuel assembly during the fuel transfer operation controls the dose rate to the refueling area and, hence, the water depth in the spent fuel pool. The fuel assembly is treated as a cylindrical source geometry for the purpose of computing the water depth.

The source strength used to determine the shielding requirements for the dryer-separator pool is based on a contact dose rate for the separator of 10 R/hr. The average gamma ray energy is approximately equal to 1 MeV.

12.2.1.2.2.7 Main Steam and Reactor Feedwater Systems Sources. In these systems, the dominant sources of radioactivity are the coolant activation products, principally ^{16}N. The following equipment is considered:

a. Moisture separators and reheaters (MSR),
b. Main condenser and hotwell,
c. Feedwater heaters, and
d. The piping associated with these systems.

The moisture separator and reheaters govern the shielding requirements on the operating floor (el. 501 ft 0 in.) of the turbine building. The ^{16}N source strengths for the first stage reheater tubes, the second stage reheater tubes, and the MSR plena are listed on Table 12.2-7. The first and second stage reheater tubes are approximated by rectangular parallelepipeds. The plena are divided into an array of rectangular parallelepipeds and cylinders, depending on their physical arrangement.

The ^{16}N source strength in the main condenser is 6.0×10^{-8} Ci/cm^3. This is based on the incoming flows from the exhaust of the reactor feed pump turbine, and the exhaust steam from the low pressure turbine. The main condenser is treated as either a truncated cone or infinite slab depending on the view angle and distance from the condenser to the dose point.

Since most of the ^{16}N exists as a noncondensable gas, it comes out of solution in the main condenser. Thus, the radiation sources in the hotwell are the fission or corrosion product radionuclides. Table 12.2-8 lists the gamma ray volumetric source strengths calculated from the hotwell. The hotwell is treated as an infinite slab.

The ^{16}N source strength of feedwater heater 6 listed in Table 12.2-9, governs the shielding requirements on the mezzanine floor of the turbine building (el. 471 ft 0 in.). The feedwater heater is treated as an array of rectangular parallel pipes and cylinders for input into QAD.

Table 12.2-10 lists the ^{16}N source strengths in selected steam piping in the MS and RFW systems.

12.2.1.2.2.8 Offgas Sources in the Turbine Generator Building. Table 12.2-11 lists the source strength from the offgas system equipment in the turbine building. Nitrogen-16 is the dominant radionuclide present in this system. The offgas equipment is located at el. 441 ft 0 in. of the turbine building.

12.2.1.2.2.9 Traveling In-Core Probe System Sources. The primary source of radiation in the TIP system is the ^{56}Mn in the traversing in-core probe (TIP) cable. The average source strength per unit length of cable is 3.27×10^4 μCi/cm. This is calculated using an exposure time of 864 sec. The average radioactivity emitted per unit length is calculated using a cosine distribution for the neutron flux in the axial direction of the core. The cable is treated as a line source for shielding purposes. The TIP components are located at el. 501 ft 0 in. of the reactor building.

12.2.1.2.2.10 Sources Resulting From Crud Buildup. Fission and corrosion product deposition is complex to describe analytically. In estimating the effects of this source, operating experience from other BWR plants is used (Reference 12.2-4); Section 12.4 discusses this in greater detail.

12.2.1.3 Radwaste Building

The radiation sources present in the radwaste building are discussed in Chapter 11.

12.2.1.4 Byproduct, Source and Special Nuclear Materials

A list of all byproduct, source and special nuclear material in sealed sources with an activity greater than 100 mCi is given in Table 12.2-12a. Several areas outside the Reactor, Turbine, and Radwaste Buildings and within the site area have been established for use and storage of radioactive material in the form of activated components, sealed sources, and contaminated tools, equipment, and protective clothing. Those areas where the total quantity of activity could at times be greater than 100 mCi under normal conditions are listed in Table 12.2-12b.

12.2.2 AIRBORNE RADIOACTIVE MATERIAL SOURCES

12.2.2.1 General

Design features that limit the airborne radioactivity in normally occupied areas are incorporated into the plant. Areas that are designated as radiation Zones I and II are considered to be normally occupied areas.

The plant was designed so that the airborne radionuclide concentrations in normally occupied areas are well below the limits specified in 10 CFR Part 20. The criteria for Zones I and II are specified in 10 CFR 20, Appendix B to 20.1001-20.2401, Table 1, Column 3.

No radiation Zone I areas exist in the reactor or turbine generator building. The only Zone I areas found in the radwaste and control building are the main control room and the counting room shown on Figures 12.3-14 and 12.3-13, respectively. The main control room is located at el. 501 ft 0 in. It has a separate heating, ventilating, and air conditioning (HVAC) system which brings in fresh air from the outside. See Section 9.4.1 for further discussion. The

counting room is located at el. 487 ft 0 in. As seen in Figure 9.4-3, the incoming ventilation flow into this room consists of fresh air. The outgoing air flow is to the area surrounding the counting room. It is concluded that the airborne concentration in the counting room is small. See Section 12.2.2.3.5 for discussion on the contribution of sampling and radiochemical analysis on airborne radioactivity levels within this area.

12.2.2.2 Model for Computing the Airborne Radionuclide Concentration in a Plant Area

The model used for computing the airborne radionuclide concentration is based on the continuous leakage of a radioactive fluid into a plant area. The removal of radionuclides from this area is through ventilation exhaust and decay. The equation which yields the airborne radionuclide concentration in a plant area is:

$$C_i = \frac{A_i q_s (PF)_i}{\lambda i^v + q_a}\left(1 - \exp - (\lambda_i + q_a / V)\ \ t\right) \qquad (12.2\text{-}1)$$

where:

C_i = concentration of radionuclide i in a given plant area ($\mu ci/cm^3$)

A_i = concentration of radionuclide i in the fluid (mCi/g)

q_s = rate of radionuclide leakage into an area (g/minute)

$(PF)_i$ = partition factor for radionuclide i (dimensionless)

λ_i = decay constant for isotope i (1/minute)

V = volume of area (cm^3)

q_a = HVAC air flow rate out of area (cm^3/minute)

t = time interval between start of leak and calculation of concentration (minute)

The equilibrium value of C_i is given by

$$C_i = \frac{A_i q_s (PF)_i}{\lambda_i\ \ V + q_a} \qquad (12.2\text{-}2)$$

Note that in all analyses where these two equations are used, the partition factor is set equal to 1.0. This yields conservative results.

12.2.2.3 Sources of Airborne Radioactivity

The potential sources of airborne radioactivity found in the plant are as follows:

a. Leakage from process equipment in radioactive systems, such as valves, flanges, and pumps,

b. Sumps, drains, tanks, and filter/demineralizer vessels which contain radioactive fluid,

c. Exhaust from relief valves,

d. Removal of reactor pressure vessel (RPV) head and associated internals,

e. Radioactivity released from sampling, and

f. Airborne radioactivity released from the spent fuel pool water and spent fuel movement.

Sections 12.2.2.3.1 through 12.2.2.3.6 discuss each of these sources and their effect on the airborne radionuclide concentration in normally occupied areas of the plant. All design features that serve to reduce the airborne radionuclide concentration are also discussed.

12.2.2.3.1 Effect of Leakage from Process Equipment in Radioactive Systems

Leakage into normally occupied plant areas from radioactive process systems is described by three parameters.

The first parameter is the location of the source of radioactive leakage. If this source is located in a Zone III or Zone IV radiation area, it does not contribute to the airborne radionuclide concentration in a normally occupied area because the air flow is from areas of potentially low radioactivity contamination to areas of potentially high radioactivity contamination. Any leakage of radioactive airborne contamination into a Zone III or Zone IV radiation area in the reactor, radwaste and control or turbine generator building is exhausted from that area through the HVAC system and is not transported into a normally occupied area. See the HVAC flow diagrams for the reactor, radwaste and control or turbine generator buildings, Figures 9.4-2, 9.4-3, and 9.4-6, and the radiation zone drawings, Figures 12.3-5 through 12.3-18.

Areas with multiple zone designation are regarded as having a high radioactivity contamination potential. Air from these areas is either exhausted to another Zone IV area or to the HVAC exhaust equipment. Thus, any radioactive leakage that occurs within an area with a multiple zone designation should not affect the airborne radionuclide concentration of a normally occupied area.

The second parameter is the rate at which the radioactive leakage is introduced into an area. Any system that operates continuously is potentially a greater source of airborne radioactivity than a system that operates periodically when radionuclide concentration and leakage rate are the same for each system. The operating pressure of the system is another consideration which affects the leakage rate. A system, such as the main steam system, is expected to have a higher leakage rate than a system which operates at atmospheric pressure. However, radioactive systems which operate at high pressure are generally located in Zone IV areas. Thus, these systems do not significantly contribute to the airborne radioactivity level in normally occupied areas. This is due to the HVAC air path which was discussed earlier.

The third parameter is the radionuclide concentration in the leaking fluid. A system that is leaking highly radioactive fluid such as reactor coolant or main steam is of greater concern, initially, than a system which is leaking condensate storage tank water. Those systems which can leak highly radioactive fluid are located in either a Zone III or Zone IV radiation area and the HVAC air flow paths do not transport this radioactivity to a low radiation area, as discussed earlier. The effect of systems which leak fluid with a low radionuclide concentration is discussed below.

A list of all radioactive systems found in the plant is provided in Table 12.2-13. Each radioactive system listed has been checked to determine its contribution to the airborne radioactivity levels in normally occupied areas. It is found that most of these systems are located in Zone III or Zone IV areas and do not contribute to the airborne radioactivity levels in normally occupied areas, due to HVAC design features as explained earlier. Some of the radioactive systems are located within areas which have a multiple radiation zone designation; e.g., Zone IV during system operation and Zone III during system shutdown. The systems in these areas do not contribute to the airborne radioactivity levels due to HVAC system design features, as explained earlier. Any system which is not entirely located in a Zone IV, Zone III, or multiple zone radiation area and which may contribute to airborne radionuclide levels in normally occupied areas is discussed in the following paragraphs. Those systems which are used only during loss-of-coolant accident (LOCA) conditions are not discussed. These include the high-pressure core spray (HPCS), low-pressure core spray (LPCS), and main steam leakage control (MSLC) systems. These systems are not regarded as being significant sources of airborne radioactivity since they are used only in a test mode or in an accident situation.

The major source of control rod drive (CRD) leakage which can contribute to the airborne radionuclide levels in a normally occupied area are the CRD pumps located in the CRD pump room. The CRD pump room is located between column lines 3.4/6 and N/N.8 at el. 422 ft 3 in. of the reactor building. Figure 4.6-5 shows suction flow for the CRD pumps is from the outlet of the condensate filter demineralizers or the condensate storage tank. Only one pump is in operation at any time and the leakage rate from this pump is assumed to be 50 gal/day. The incoming HVAC air flow to this area is approximately 3500 ft^3/minute. The

mathematical model described in Section 12.2.2.2 is used to evaluate the airborne activity. The results are listed in Table 12.2-14. It is seen that the expected airborne radionuclide level is well below the derived air concentrations (DAC) values.

The major source of main condensate leakage which can contribute to the airborne radionuclide levels in a normally occupied area are the condensate pumps. These pumps are located between column lines D/F and 13/15 at el. 441 ft 0 in. of the turbine generator building. The suction flow from these pumps is taken from the main condenser hotwell. Since the suction side of the pumps is at a negative pressure to the surrounding area, no leakage from the pump seals should occur. However, leakage may occur from the valves and other equipment which are located on the discharge side of the pump. It is conservatively assumed that the leakage is 1 gpm. The airborne radionuclide concentration in the area where the condensate booster pumps and condensate pumps are located is listed in Table 12.2-15.

The offgas equipment which is radioactive is located in Zone IV areas. The exception is the afterfilter, which is located between column lines K.1/L.9 and 14.7/15.4 at el. 452 ft 0 in. of the radwaste building. This filter is not a source of airborne radioactivity. The reasons are that the filter operates at approximately atmospheric pressure and the radioactivity contained within the filter is small. See Section 11.3 for details on offgas system operation.

12.2.2.3.2 Effect of Sumps, Drains, Tank, and Filter Demineralizer Vents

The equipment drain (EDR), floor drain (FDR), and miscellaneous radwaste (MWR) systems are designed to collect and process various types of liquid radioactive waste generated in the reactor, radwaste, or turbine generator buildings, as explained in Section 11.2. In each of the aforementioned buildings, there is a network of EDR, FDR, and MWR drains which conduct radioactive liquid waste to an EDR, FDR, and MWR sump, respectively. These drains and sumps are not significant sources of airborne radionuclides for the following reasons:

a. Each of the EDR, FDR, and MWR sumps present in the reactor, radwaste, and turbine generator buildings is covered with a steel plate. The free volume in the sump is maintained at a negative pressure with respect to the surrounding area by use of a riser vent, which is connected to the HVAC system in the building of concern. The steel plate covering the sump does not provide an airtight seal. However, air is drawn into the sump, then through the riser vent and is exhausted to the HVAC system. Any radionuclides that escape into the free volume of the sump are discharged to the HVAC system and do not escape into the area surrounding the sump; and

b. The EDR, FDR, and MWR drains are connected to their respective sumps through the same riser vents discussed in the preceding paragraph. Some of the drains employ loop seals, which prevent radioactive gases from escaping into the areas around the location of the drains. Other drains do not employ loop

seals, but since the riser vent is connected to the HVAC system, air will be drawn into the drain through the riser vent and out to the HVAC system.

The tanks and filter demineralizer vessels that contain significant inventories of radionuclides are vented to the HVAC system. These tanks and filter demineralizer vessels are located in Zone III or Zone IV radiation areas. Even if any airborne radionuclides were released from these tanks or filter demineralizers, there would be no effect on normally occupied areas due to the HVAC system design features, which are explained in Section 12.2.2.3.1.

12.2.2.3.3 Effect of Relief Valve Exhaust

The relief valves found in the various plant systems which can exhaust radioactive fluids are not considered to be a significant source of airborne radioactivity in normally occupied areas. The reasons are as follows:

a. All relief valves (except the main steam safety relief valves), which relieve pressure in the turbine main steam or bleed systems, exhaust directly to the condenser, and

b. All relief valves, which relieve pressure in a system which contains radioactive fluid, either exhaust directly into the suppression pool, an equipment or floor drain, or into a line which is part of the system in question.

With reference to the equipment or floor drain systems, the receiving point for relief valve discharges is in a radiation zone equivalent or higher than the equipment being relieved. For discharge back to the system, the same is true.

The main steam safety relief valves, which are located within primary containment, provide pressure relief to the main steam lines coming from the reactor. These valves exhaust directly to the suppression pool. The effect of main steam relief valve blowdown in normally occupied areas in secondary containment is analyzed by assuming that all radionuclides that are present in the main steam blowdown are released to the primary containment air. The radionuclide distribution within the free volume of the primary and secondary containment is assumed to be uniform. The radionuclide concentration in secondary containment becomes, in mCi/cm^3:

$$C_{sc,i} = \frac{R\, q_b t_b A_i}{q_v - R\, V_{sc}} (\exp - (R + \lambda_i)\, t - \exp - (\lambda_i + q_v / V_{sc})t) \qquad (12.2\text{-}3)$$

where: R = primary containment leakage constant (1/minute)

q_b = main steam blowdown flow (g/minute)

t_b = duration of blowdown flow (minute)

q_v = ventilation flow rate out of secondary containment (cm^3/minute)

V_{sc} = volume of secondary containment (cm^3)

λ_i = decay constant for isotope i (1/minute)

t = time after blowdown event

$C_{sc,i}$ = airborne radionuclide concentration of radionuclide i in the secondary containment ($\mu Ci/cm^3$)

A_i = radionuclide concentration in blowdown fluid ($\mu Ci/g$)

The value of t which yields the maximum value of $C_{sc,i}$ is

$$t = \frac{1}{R - q_v / V_{sc}} \ln \frac{R + \lambda_i}{\lambda_i + q_v / V_{sc}} \qquad (12.2\text{-}4)$$

The calculated results are based on the occurrence of a main steam isolation valve closure. This results in all 18 relief valves being actuated for a maximum duration of 40 sec. This event results in the maximum release of radionuclides to primary containment (see Table 5.2-3 and Sections 15.1 and 15.2). The values of the various parameters used in equations 12.2-3 and 12.2-4 are given as follows:

R = 0.5 vol. %/day (Section 3.8.2.3-1)

q_b = 1.6×10^7 lb/hr = 1.2×10^8 g/minute (Table 5.2-3)

t_b = 40 sec = 0.67 minute (Table 5.2-3)

q_v = 9.5×10^4 cfm (Table 11.3-6)

V_{sc} = 3.5×10^6 ft^3 (Table 11.3-6)

The values of A_i are based on the information found in Section 11.1.

The maximum airborne concentration of the most important radionuclides in secondary containment from a main steam relief valve blowdown is listed in Table 12.2-16. The concentrations are far below the DAC criteria given in 10 CFR Part 20. It is concluded that the main steam relief valve blowdown has a negligible effect on the airborne radionuclide level in secondary containment.

12.2.2.3.4 Effect of Removing Reactor Pressure Vessel Head and Associated Internals

Experience at BWR plants has shown that an inventory of radioactive gases will accumulate inside the reactor vessel head between the time of shutdown and head removal. These gases consist primarily of the longer lived radioiodines and noble gases. To prevent these gases from being released to the refueling area, provisions are made so that the gases are vented to the HVAC system prior to reactor pressure vessel (RPV) head removal. These provisions include the ability to vent the RPV head through a 4-in. flexible hose connection to the reactor building sump vent filter units which contain particulate and charcoal filter components. The connection to the sump vent filter unit is shown in Figure 9.4-2.

Provisions are also made for clean water services to the RPV cavity area. This permits wetting of the RPV cavity and components to minimize airborne contamination. This is done prior to flooding the RPV cavity.

It is anticipated that RPV head and reactor internals removal will have a minimal effect on the airborne radionuclide level in the spend fuel area.

12.2.2.3.5 Effect of Sampling

The possibility of releasing radionuclides which could become airborne during sampling operations is recognized. Design features are incorporated into the sample system to limit the radionuclide release. Radioactive liquids that require frequent grab sampling are piped via sample tube lines to fume hoods located in sample rooms. Grab sampling will normally be accomplished in the fume hoods. During sampling, an inflow face air velocity of approximately 100 ft/minute will be maintained to sweep any airborne radioactive particles to the exhaust duct. Administrative control is further exercised in the form of procedures that are followed when process fluids are sampled. This minimizes the release of radioactive fluids and, hence, exposure to personnel during the sampling process.

12.2.2.3.6 Effect of Spent Fuel Movement

Experience at four operating BWR plants has shown that fuel movement does not present any unusual radiological problems. The expected level of radioactivity in the spent fuel pool water is listed in Table 3.5-7 of the Environmental Report. This activity is not expected to have any significant radiological effects on the airborne radionuclide levels above the spent fuel pool floor.

12.2.2.3.7 Effects of Solid Radwaste Handling Areas

The solid radwaste handling equipment contained Zone IV area between columns N.1 and S (Figure 12.3-11) are designed for remote operation. Entry for maintenance activities will normally entail shut down and flushing of systems and equipment. The solid radwaste handling equipment is operated primary from low background areas of Zone III between columns Q.1 and R.2 near the waste compactor.

The ventilation supply to this Zone III area is clean outside air with air flow into surrounding normally unoccupied areas. The only source of airborne radioactivity, the waste compactor, is vented directly to the filtered exhaust ventilation system.

Airborne radioactivity levels in the normally occupied solid radwaste handling areas will be ambient outside air concentrations.

12.2.2.3.8 Effects of Liquid Radwaste Handling Areas

Normally occupied liquid radwaste handling areas include the valve corridor (a Zone III area), the precoat room and the radwaste control room (Zone II areas) shown in Figure 12.3-12.

This valve corridor is supplied directly with outside air. Components that are operated from this corridor contain radioactive materials which are located in normally unoccupied valve and pump rooms which are served by separate ventilated supply and exhaust. The radwaste control room and the precoat rooms do not house components containing radioactive material.

Although not normally occupied, the possibility exists that entry into pump corridor (a Zone IV area between columns 11.2 and 12.2) (Figure 12.3-11) and valve and pump (East and West side) rooms (Zone IV areas of Figure 12.3-12) could be necessary while systems are operating.

The pump corridor of Figure 12.3-11 contains the highest concentrations of radioactive material and has the lowest air flow to volume ratio, so is taken as a worst case. Equilibrium airborne radioactivity concentration is calculated as described in Section 12.2.2.2 assuming a leak rate of 50 gal/day from the reactor water cleanup phase separator decant pump. The results are shown in Table 12.2-17.

12.2.3 REFERENCES

12.2-1 Aalto, E. et al., A Users Manual for the NRN Shield Design, AE-145, June 1964.

12.2-2 Perkins, J. F. and King, R. W., Energy Release from Decay of Fission Products, Nuclear Science and Engineering, Vol. 3, 1958 and Perkins, J. F., U.S. Army Missile Command Redstone Arsenal, Report No. RR-TR-63-11, July 1963.

12.2-3 Malenfant, Richard E., QAD: A Series of Point-Kernel General Purpose Shielding Program, National Technical Information Service, LA-3573, October 1966.

12.2-4 Butrovich, R. et al., Millstone Nuclear Power Station, Refueling/Maintenance Outage, GE NEDO-20761, Class 1, Fall 1974.

Table 12.2-1

Basic Reactor Data for Source Computations
(During Plant Operation)

Reactor thermal power		3544 MW
Overall average core power density		52.4 w/cm^3
Core power peaking factors		
At core center:	$\frac{Pmax}{Pave_Z}$ (axial)	1.5
	$\frac{Pmax}{Pave_R}$ (radial)	1.4
At core boundary:	$\frac{Pmax}{Pave_Z}$ (axial)	0.5
	$\frac{Pmax}{Pave_R}$ (radial)	0.7

Core volume fractions:

Material	Density (g/cm^3)	Volume Fraction
UO_2	10.4	0.254
Zr	6.4	0.140
H_2O	1.0	0.274
Void	0	0.332

Average water density between core and vessel below the core	0.74 g/cm^3
Average water-steam density above core	
In the plenum region	0.23 g/cm^3
Above the plenum (homogenized)	0.6 g/cm^3
Average steam density	0.036 g/cm^3

Table 12.2-2

Neutron Flux at Reactor Core-Reflector Boundary

Energy Range (MeV)	Neutron Flux (Neutrons/cm^2 sec)
17.9-14.0	7.13E9
14.0-12.0	2.37E9
12.0-10.0	1.79E10
10.0-9.0	2.37E10
9.0-8.0	4.69E10
8.0-7.0	1.17E11
7.0-6.0	3.45E11
6.0-5.0	6.57E11
5.0-4.0	1.23E12
4.0-3.0	2.34E12
3.0-2.5	2.04E12
2.5-2.0	1.27E12
2.0-1.5	2.97E12
1.5-1.0	5.63E12
1.0-0.7	3.18E12
0.7-0.5	3.92E12
0.5-0.3	4.15E12
0.3-0.1	5.62E12
0.1-0.03	3.50E12
0.03-0.01	2.31E12
1.0(-2)-1.0(-3)	3.76E12
1.0(-3)-1.0(-4)	3.07E12
1.0(-4)-1.0(-5)	2.40E12
1.0(-5)-1.0(-6)	1.94E12
1.0(-6)-1.0(-7)	1.50E12
1.05(-7)-thermal	2.58E12

Table 12.2-3

Reactor Core Gamma Ray Energy Spectrum
During Operation

Energy Range (MeV)	Mid-Range Energy (MeV)	Volumetric Energy Release Rate (MeV/cm^3 sec)
10.0-7.0	8.5	5.97E11
7.0-5.0	6.0	4.00E11
5.0-3.0	4.5	4.77E12
3.0-2.0	2.5	6.83E12
2.0-1.0	1.5	1.02E13
1.0-0.0	0.5	1.25E13

Table 12.2-4

Reactor Core Gamma Ray Spectrum
Immediately After Shutdown

Energy Range (MeV)	Average Energy (MeV)	Volumetric Energy Release Rate (MeV/cm^3 sec)
>2.60	3.00	8.70E11
2.60-2.20	2.40	4.24E11
2.20-1.80	2.00	2.63E11
1.80-1.35	1.58	1.15E12
1.35-0.90	1.13	1.40E12
0.90-0.40	0.65	1.46E12
0.40-0.00	0.20	2.83E11

Table 12.2-5

Fission Product Source in RHR Piping and Heat Exchangers 4 Hours After Shutdown

Energy Range (MeV)	Average Energy (MeV)	Energy Release (MeV/cm^3 sec)
4.00-3.00	3.50	2.30E2
3.00-2.60	2.75	3.70E2
2.60-2.20	2.40	8.20E2
2.20-1.80	2.00	1.30E3
1.80-1.35	1.58	4.80E3
1.35-0.90	1.13	5.00E3
0.90-0.40	0.65	9.20E3
0.40-0.10	0.25	1.80E3

Table 12.2-6

Gamma Ray Energy Spectrum For
Spent Fuel Sources (One Core)

Energy Range (MeV)	Average Energy (MeV)	Volumetric Energy Release Rate (MeV/cm^3 sec) 2 Days After Shutdown
>2.60	3.00	2.54E8
2.60-2.20	2.40	9.89E9
2.20-1.80	2.00	4.93E9
1.80-1.35	1.58	1.34E11
1.35-0.90	1.13	2.59E10
0.90-0.40	0.65	2.97E11
0.40-0.00	0.20	5.17E10

Table 12.2-7

Nitrogen-16 Source Strength in Main Steam
and Reactor Feedwater

Component	Radioactivity Concentration (Ci/cm^3)
Moisture separators and reheaters (MSR)	
Plena	3.48E-7
First stage reheater tube bundle (east end of MSR)	7.23E-7
First stage reheater tube bundle (west end of MSR)	5.91E-7
Second stage reheater tube bundle (east end of MSR)	1.43E-6
Second stage reheater tube bundle (west end of MSR)	1.14E-6

Table 12.2-8

Gamma Ray Energy Spectrum and Volumetric Source Strength in the Hotwell

Group	Average Group Energy (MeV)	Volumetric Energy Release Rate (MeV/cm^3 sec)
1	3.50	3.82E1
2	2.80	7.92E1
3	2.40	1.43E2
4	2.00	1.24E2
5	1.57	3.94E2
6	1.12	3.00E2
7	0.65	6.71E2
8	0.20	8.26E1

Table 12.2-9

Nitrogen-16 Source Strength in
Feedwater Heater 6

	Radionuclide Concentration (Ci/cm^3)	
Feedwater Heater	Steam	Water
6	4.93E-7	8.40E-6

Table 12.2-10

Nitrogen-16 Source Strengths for Piping Associated
With the Main Steam and Reactor Feedwater Systems

Point of Interest	Line Source (Ci/cm)
Input lines to high pressure turbine	7.60E-3
Extraction steam line from high pressure turbine to FWH 6A	7.50E-4
Crossunder piping from high pressure turbine to main steam relief	5.50E-4
Crossover piping from main steam relief to low pressure turbine	3.80E-4
Extraction steam line from low pressure turbine to FWH 1A	7.50E-5
Extraction steam line from low pressure turbine to FWH 2A	1.20E-4
Extraction steam line from low pressure turbine to FWH 3A	1.40E-4
Extraction steam line from low pressure turbine to FWH 4A	1.50E-4
Heater drain line from FWH 6A to FWH 5A	2.30E-5
Heater drain line from FWH 5A to FWH 4A	1.01E-6

Table 12.2-11

Offgas System Sources in the Turbine Generator Building

Component	^{16}N Source Strength ($\mu Ci/cm^3$)
Steam jet air ejector (first stage)	2.3E0
Intercondenser	4.2E1
Steam jet air ejector (second stage)	3.6E0
Preheater	2.8E0
Recombiner	2.3E0
Offgas condenser	3.7E1
Water separator[a]	2.7E1

[a] The preheater, recombiner, offgas condenser, and water separator are located in the same room.

Table 12.2-12a

Special Sources With Strength Greater Than 100 Millicuries

Isotope	Identification	Form	Quantity (mCi)	Use/Location
^{241}AmBe	2-81-020	Solid	15,600	Calibration (EOF)
^{241}AmBe	2-82-050	Solid	3,000	Neutron source (plant)
^{241}AmBe	2-86-073	Solid	1,050	WNP-1 source (plant)
^{137}Cs	21-347	Solid	1,200	Panoramic shepard cal (EOF)
^{137}Cs	2-83-097	Solid	10,000	ARM calibration (plant)
^{137}Cs	2-84-058	Solid	3,000	Shepard series 28 cal (EOF)
^{137}Cs	2-88-002	Solid	250	Victoreen model 878-W cal (plant)
^{137}Cs	2-93-026	Solid	1,500	MG calibrator (EOF)
^{137}Cs	2-99-028	Solid	3,000	Mini-89 calibrator (plant)
^{137}Cs	08-132	Solid	427,000	Hopewell calibrator (EOF)
^{137}Cs	08-133	Solid	506	Hopewell calibrator (EOF)
^{137}Cs	13-230	Solid	15,000	ARM calibration (plant)
^{137}Cs	17-307	Solid	600	Shepherd Series 10 Cal (plant)
^{238}PuBe	2-84-047	Solid	14,240	WNP-3 startup source (plant)
^{238}PuBe	2-84-048	Solid	14,380	WNP-3 startup source (plant)

Table quantities (mCi) listed per the manufacturer documentation

Table 12.2-12b

Radioactive Material Use and Storage Areas
Outside the Main Radiologically Controlled Area

Area	Location	Approximate Size (sq. ft.)	Normal Contents	Normal Activity (mCi)
LSA Storage Pad	Outside SW side of Radwaste Bldg	1800	Low-activity dry and compacted solid waste containers	930
Building 13	West portion of Bldg 13	2700	Contaminated protective clothing	300
Warehouse 5	NE portion of Bldg 80 at Snake River Warehouse Complex	4000	Radioactive & contaminated equipment	590
Building 167	~0.5 miles E of Plant	6332	Radioactive & contaminated equipment	1370
Building 167 Storage Yard	~0.5 miles E of Plant	68000	C-van storage	1620
Outage Storage Yard	Fenced area W of Bldg 105	2400	Outage radioactive material & C-van storage	114
Kootenai HP Calibration Lab	Kootenai (Bldg 34) Rms 102 & 102A	600	Calibrators/irradiators, calibration sources, radioactive HP instruments	377030

Table 12.2-13

List of Radioactive Piping and System Designations

Air removal (AR)

Bleed steam (BS)

Condensate filter/demineralizer (CPR)

Condenser vents and drains (CND)

Control rod drive (CRD)

Equipment drains radioactive (EDR)

Exhaust steam (ES)

Floor drains radioactive (FDR)

Fuel pool cooling (FPC)

Heater drains (HD)

Heater vents (HV)

High pressure core spray (HPCS)

Low pressure core spray (LPCS)

Main condensate before condensate demineralizers (COND)

Main steam (MS)

Main steam isolation valve leakage control system (MSLC)

Miscellaneous waste radioactive (MWR)

Offgas (OG)

Process sample radioactive (PSR)

Process vents (PVR)

Process waste radioactive (PWR)

Reactor core isolation cooling (RCIC)

Reactor recirculation (RRC)

Reactor water cleanup (RWCU)

Relief valve vents radioactive (VR)

Residual heat removal (RHR)

Table 12.2-14

Airborne Radionuclide Concentration in Control
Rod Drive Pump Area (el. 422 ft. 3 in. reactor building)

Radionuclide	Airborne Concentration C_i ($\mu Ci/cm^3$)	Derived Air Concentration (DAC)[a] (mCi/cm^3)	Ratio of C_i to DAC
^{131}I	1.9E-11	2E-8	1E-3
^{132}I	2.5E-12	3E-6	1E-6
^{133}I	2.2E-11	1E-7	2E-4
^{134}I	1.9E-12	2E-5	2E-7
^{135}I	8.7E-12	7E-7	1E-5
^{83}Br	3.3E-13	3E-5	1E-8
^{84}Br	6.3E-14	2E-5	3E-9
^{85}Br	1.3E-16	---	---

[a] 10 CFR 20, Appendix B to 20.1001-20.2401, Table I, Column 3.

Table 12.2-15

Airborne Radionuclide Concentration in
Condensate Pump Area (el. 441 ft. 0 in. turbine generator building)

Radionuclide	Airborne Concentration C_i ($\mu Ci/cm^3$)	Derived Air Concentration (DAC)[a] (mCi/cm^3)	Ratio of C_i to DAC
^{131}I	4.2E-10	2E-8	2E-2
^{132}I	3.8E-9	2E-6	3E-3
^{133}I	2.9E-9	1E-7	2E-2
^{134}I	7.4E-9	2E-5	4E-4
^{135}I	4.2E-9	7E-7	6E-3
^{83}Br	4.8E-10	3E-5	2E-5
^{84}Br	8.2E-10	2E-5	4E-5
^{85}Br	3.2E-10	1E-7	3E-3

[a] 10 CFR 20, Appendix B to 20.1001-20.2401, Table I, Column 3.

Table 12.2-16

Airborne Radionuclide Concentration in Secondary Containment from a Main Steam Relief Valve Blowdown

Radionuclide	Airborne Concentration C_i ($\mu Ci/cm^3$)	Derived Air Concentration (DAC)[a] (mCi/cm^3)	Ratio of C_i to DAC
^{131}I	3.0E-11	2E-8	2E-3
^{133}Xe	5.0E-10	1E-4	5E-6

[a] 10 CFR 20, Appendix B to 20.1001-20.2401, Table I, Column 3.

Table 12.2-17

Airborne Radionuclide Concentration in
Liquid Radwaste Handling Area

Radionuclide	Airborne Concentration C_i ($\mu Ci/cm^3$)	Derived Air Concentration (DAC)[a] (mCi/cm^3)	Ratio of C_i to DAC
^{140}Ba	5.8E-10	6E-7	1E-3
^{140}La	6.5E-10	6E-7	1E-3
^{239}Np	2.2E-10	9E-7	2E-3
^{58}Co	9.8E-10	3E-7	3E-3
^{89}Sr	4.8E-10	6E-8	1E-2
^{99}Mo	2.6E-10	6E-7	4E-4
^{99M}Tc	1.7E-10	6E-5	3E-6
^{132}Te	1.5E-10	9E-8	2E-3
^{131}I	9.2E-10	2E-8	4E-2
^{132}I	2.4E-10	3E-6	1E-4
^{133}I	4.1E-10	1E-7	4E-3
^{135}I	1.8E-10	7E-7	2E-4

[a] 10 CFR 20.

12.3 RADIATION PROTECTION DESIGN FEATURES

12.3.1 FACILITY DESIGN FEATURES

Columbia Generating Station plant incorporates the design objectives and the design features guidance given in Regulatory Guide 8.8 to the extent discussed in Section 12.1.1. Examples of these features are discussed in Section 12.3.1.3.

Figures 12.3-5 through 12.3-18 show the general arrangement for each of the plant buildings. In addition, these figures show the shielding arrangement, radiation zone designations for both normal operation and shutdown conditions, controlled access areas, personnel and equipment decontamination areas, location of the health physics facilities, location of area radiation monitors, location of radwaste control panels, location of the counting room, and location of the onsite laboratory for analysis of chemical and radiochemical samples. The counting room is located at el. 487 ft 0 in. of the radwaste and control building (see Figure 12.3-13). The design basis radiation level within the counting room is 0.1 mrem/hr during normal operation.

Plant areas, as identified in Section 12.3 figures, are categorized as design radiation zones according to expected maximum radiation levels and anticipated personnel occupancy with consideration given toward maintaining personnel exposures ALARA and within the standards of 10 CFR 20.

12.3.1.1 Radiation Zone Designations

The design basis criteria used for each zone are given below, and the plant layout including major equipment, locations, and radiation zone designations are shown in Figures 12.3-5 through 12.3-18.

For purposes of radiation exposure control, a restricted area is defined in 10 CFR 20, paragraph 20.1003, and plant procedures.

Zone	Maximum Dose Rate (mrem/hr)	Design Bases Criteria
I	≤1.0	Unlimited occupancy.
II	≤2.5	Unlimited occupancy for plant personnel during the normal work week.
III	100.0	Design base occupancy less than 1 hr per week. Posted zones and controlled entries.
IV	Unlimited	Positive access control. Controlled entry and occupancy.

Each access point to every Zone IV area may be secured by locked door or other positive control method while it is a "high radiation area." Occupancy of such areas is limited in frequency and duration and entrance must be authorized in advance by the Radiological Operations Supervisor or his representative.

An area survey of radiation levels will be conducted prior to first entry of Zone IV areas to determine the maximum habitation time.

12.3.1.2 Traffic Patterns

Access control and traffic patterns in the plant have been evaluated to maintain personnel radiation exposures ALARA and to minimize the spread of contamination.

Normal entry into the plant is as follows:

a. Personnel normally access the plant Protected Area through the security Protected Area Access Point (PAAP).

b. The main Radiologically Controlled Area (RCA) normally includes the reactor building, turbine generator building, radwaste building, and diesel generator building. Normal access to these areas is through one of two Health Physics control points located at each end of the main plant corridor.

12.3.1.3 Radiation Protection Design Features

Section 12.1.2 discusses the design objectives for the plant. Examples showing the incorporation of these objectives are provided in the following sections.

12.3.1.3.1 Facility Design Features

Filters and Demineralizers

Liquid radioactive waste and other process streams containing radioactive contaminants are processed through filters and demineralizers. The pressure-precoat type of filter is used in the major fluid processing systems. Cartridge type filters are used in a few select instances such as in the control rod drive (CRD) system. In the case of demineralizers, either the pressure-precoat or deep-bed type of demineralizer is employed.

Each filter and demineralizer is located in a shielded cubicle at el. 487 ft 0 in. of the radwaste and control building. These filters and demineralizers are accessible through the ceiling of the cubicle by removing the shielding plug at el. 507 ft 0 in. This minimizes the radiation

exposure to plant personnel from adjacent sources. After removal of the shielding plug, the filter or demineralizer can be serviced remotely by use of special tools designed for this purpose. If it is necessary, the filter or demineralizer can be removed from the cubicle to a work area for servicing. There are overhead cranes provided for the purpose of shielding plug and filter or demineralizer vessel removal.

Each pressure precoat type filter or demineralizer has its own support equipment such as a holding pump, process control valves, and precoating equipment. The holding pump and process control valves associated with each filter or demineralizer is located in the valve gallery. This valve gallery is located on the east side of the radwaste-control building, el. 467 ft 0 in., and is a Zone III radiation area (Figure 12.3-12).

The holding pump and motor-operated valves can be operated from control panels located in Zone III radiation areas. Manually operated process control valves are operated by use of reach rods that pass through the shielding walls into the corridor. This corridor is a Zone III radiation area. With the exception of instrument root valves, all pumps and valves can be remotely operated. Instrument root valves are normally open and are not used during normal plant operation. The filter or demineralizer precoat equipment and associated controls, which includes metering equipment, are located in a Zone III radiation area to provide for maintenance access. Each filter or demineralizer may be backwashed with condensate water, chemically cleaned, or purged with air from a remote control panel. Each deep-bed demineralizer has its own support equipment. A gravity feed subsystem transfers the fresh resins from the resin addition tank to the demineralizers. The spent resins are transferred hydropneumatically to the spent resin tank.

All piping routed to and from filter or demineralizer cubicles is located in the valve gallery area or in shielded pipe tunnels. The pipes are routed to avoid unnecessary bends, thus minimizing possible crud buildup.

Specific examples of filters or demineralizers that incorporate the aforementioned design features are the waste collector filter and waste collector demineralizer. A typical layout is shown in Figure 12.3-19.

Tanks

All tanks that contain radioactive liquids and solids are categorized into different groups depending on their level of radioactivity. Tanks that contain significant levels of radioactivity are located at el. 437 ft-0 in. of the radwaste and control building.

The tanks that contain radioactive backwash and resins are located in shielded cubicles. These include the condensate phase separator tanks-condensate backwash receiving tank, spent resin tanks waste sludge phase separator tanks, and the reactor water clean up (RWCU) phase

separator tanks. These tanks are constructed of either stainless steel or epoxy-lined carbon steel.

The tanks that contain unprocessed liquid radioactive waste, such as the waste collector, floor drain collector, and chemical waste tanks are not located in individually shielded cubicles. However, as described in Section 12.1.1, administrative controls will be used to keep doses to plant personnel ALARA. The waste collector and the floor drain collector tanks are constructed of carbon steel. The chemical waste tanks are stainless steel.

To measure the liquid level in the aforementioned tanks, a bubbler-type level indicator, coupled with a pressure transducer, provides for remote monitoring of the liquid level.

All tanks described above are vented to the radwaste building heating, ventilating, and air conditioning (HVAC) exhaust system as described in Section 12.2.2. This limits the release of airborne radionuclides to the area surrounding the tank.

Pumps

Pumps handling spent demineralizer resins are shielded from the phase separator tank. An example of this is the waste sludge discharge pump which is shielded from the waste sludge phase separator by concrete and block wall. A shutoff valve in the suction line keeps the pump isolated when it is not in use. Following the discharge of a sludge batch from the phase separator tanks, the pump and its associated piping is automatically flushed with condensate water. Thus, when it is not in use, the pump is free of sludge. A condensate supply, controlled by a valve electrically linked to the pump, maintains an external sealing barrier, preventing sludge leakage past the shaft seal during pump operation.

Heat Exchangers

Heat exchangers handling radioactive fluids are designed to limit occupational exposures. An example is the cooler condensers whose function is to condense moisture from the offgas process stream. The cooler condensers are located in a separate cell in the radwaste building, as shown in Figure 12.3-11. No personnel access is required during plant operation. The associated valves, other than those used during maintenance operations, are remotely operated. The glycol coolant which flows through the tube side is kept at a higher pressure than the offgas flowing through the shell side of the condenser. Thus, a tube failure will not result in radioactivity contaminating the glycol cooling loop. Condensate water that is separated from the offgas is returned, via a water loop seal, to the radioactive sump for processing. The 16-ft deep loop seal prevents escape of radioactive gas through the drain connection. An enlarged discharge section in the loop seal protects it against siphoning. The enlarged discharge section also provides for automatic loop seal restoration should its contents be displaced by a temporary pressure surge. Figure 12.3-20 shows schematically the cooler condenser loop seal arrangement.

Recirculation Pumps

The decontamination concentrator bottoms recirculation pump serves the decontamination solution concentrator. The pump is made of 316 stainless steel to minimize the corrosive effects of miscellaneous chemical waste fluid. The pump is located in a separate cell from the concentrating equipment it serves. A steam/air sparger at the bottom of the concentrator can be used to flush the pump prior to any maintenance operations. The internals of the pump may be removed without disturbing the connecting piping. A double mechanical seal with clean water circulating through it prevents leakage of process liquid past the shaft seal.

The decontamination concentrator bottoms recirculation pump is not used. There are no plans to use the pump.

Evaporators

The decontamination solution concentrators use steam to boil off water from the incoming chemical waste, as described in Section 11.2. The heating steam is supplied from an evaporator. As shown in Figure 12.3-21, steam generated from demineralized water flows in a closed loop through the shell side of the evaporator and the shell side of the concentrator heating element. The steam is then circulated to the condensate return tank to be pumped back to the evaporator. The steam in the concentrator heating element is at a higher pressure than the decontamination solution flowing through the tube side. Furthermore, the auxiliary steam system, which provides heating steam to the tube side of the evaporator, is at a higher pressure than the shell side. This arrangement provides an effective barrier against contamination of the house auxiliary steam.

The decontamination solution evaporator system is deactivated. There are no plans to use the system.

Valve Gallery and Valve Operating Stations

Valves handling radioactive fluids and requiring manual operation are located in a valve gallery at el. 467 ft 0 in. of the radwaste and control building. These valves are operated from behind a shielding wall with the aid of reach rods. Reach rod penetrations are not in the line-of-sight with major radiation sources, such as resin traps. In addition, the reach rod wall penetrations are grouted about the reach rod assembly, and steel plates are added on both sides of the penetration to minimize radiation exposure. A typical application of reach rods and details of a shielding wall penetration is shown in Figure 12.3-19.

The operating stations for motor-operated valves are located in Zone III radiation areas.

Sampling Areas

The location of the sampling areas within the plant is discussed in Section 9.3. Design features of sample areas that reduce occupational exposure are discussed in Section 12.2.2.3.5.

Ventilation Filters and Filter Trains

Filters that are installed as part of the HVAC units in the Columbia Generating Station plant are located in an accessible area. Selected filter units are designed so that it is possible to introduce a plastic bag over the filter through a service access opening in the HVAC unit. For other filter units, the filter can be pulled into a plastic bag as the filter is removed from the HVAC unit.

Hydrogen Recombiners

The hydrogen recombiners for the offgas system are located in the turbine-generator building. These recombiners are single-pass devices which do not require process control valves. They are located in a shielded cell and do not require personnel access during operation. Temperature and pressure in the recombiners are remotely monitored. The recombiners and associated piping are designed to withstand an internal explosion.

12.3.1.3.2 Design Features That Reduce Crud Buildup

Design features and considerations are included to reduce radioactive nickel and cobalt production and buildup. For example, the primary coolant system consists mainly of austenitic stainless steel, carbon steel, and low alloy steel components. Nickel content of these materials is low. Nickel and cobalt contents are controlled in accordance with applicable ASME material specifications. A small amount of nickel base material (Inconel 600) is employed in the reactor vessel internal components. Inconel 600 is required where components are attached to the reactor vessel shell, and coefficient of expansion must match the thermal expansion characteristics of the low-alloy vessel steel. Inconel 600 was selected because it provides the proper thermal expansion characteristics, adequate corrosion resistance and can be readily fabricated and welded. Alternate low nickel materials which meet the above requirements and are suitable for long term reactor service are not available. Hardfacing and wear materials having a high percentage of cobalt are restricted to applications where no alternate materials of equally good characteristics are available.

To minimize crud buildup, lines carrying slurries in the reactor water cleanup system and in the radwaste system use extensively self-flushing valves. Furthermore, all of the pipe joints of 2.5 in. and above in size in the reactor water cleanup (RWCU) and radwaste systems are butt welded. Butt welding is also used in the equipment drain processing (EDR) and floor drain processing (FDR) systems for lines of 1 in. and above, except for two 1-in. flow control valves, one 1.5-in. flow control valve, two 2-in. socket welded ball valves, one 1-in. socket

welded ball valve, and four 3-in. flanged butterfly valves. Lines of 2.5-in. and larger in the offgas system are also butt welded.

The recirculation system is equipped with decontamination flanges for decontamination of the recirculation pump and associated hardware. Also the cleanup, emergency core cooling system (ECCS), and radwaste systems are provided with decontamination connections to enable decontamination of their hardware. In addition, the RWCU and condensate process filter demineralizers reduce the amount of activation products in these systems. Boiling water reactors (BWRs) do not use high temperature filtration.

Depleted zinc is injected into the feedwater system to displace cobalt from the corrosion product layer in the recirculation system. Iron is injected into the feedwater system to cause the displaced cobalt to adhere to the surface of the fuel rods. This has caused a reduction of exposure rates from the recirculation system.

12.3.1.3.3 Field Routing of Piping

All code Group A piping is dimensioned in detail. Other piping, 2 in. in diameter and smaller, carrying radioactive fluids, are not dimensioned in detail but are required to be in specified space envelops for shielding and in-plant exposure considerations. Such piping runs have their inception points and terminal points dimensionally located. These inception or terminal points may be an outlet or inlet of a pump, a junction with a larger pipe, or a tank nozzle. Also located dimensionally are all pipe penetrations through a wall, ceiling, or floor. Radioactive piping routed through lower radiation zones is enclosed within a shielded tunnel when warranted by high expected radiation levels. Radioactive piping 2.5-in. in diameter and larger is detailed dimensionally.

12.3.1.3.4 Design Features That Reduce Occupational Doses During Decommissioning

Many of the design facilities which presently exist in the plant can be used to minimize occupational exposure during decommissioning, whether decommissioning is accomplished through mothballing, entombment, removal/dismantling, or any combination of the above alternatives. Such facilities include those used for handling and for offsite shipment of fresh fuel, spent fuel, more sources, contaminated filter elements, resins, and other radioactive wastes. The radioactively contaminated spent fuel pool water can be removed by a portable pump placed into the pool after all spent fuel has been removed from the site and any decommissioning use of the pool is finished. The portable pump will discharge into the skimmer surge tank from where the existing decontamination procedure can be implemented.

The number of man rems due to the airborne radioactivity, that may be introduced by the handling of radioactively contaminated systems, as well as the number of man rems due to contact with the same systems, can be reduced by first decontaminating them. Means exist in the present design where radioactively contaminated systems can be decontaminated chemically

by remote control and flushed. The plant has a hot machine shop and a hot instrument shop located in the radwaste building where contaminated equipment can be decontaminated under controlled conditions. Provisions have been made in the same building for a future decontamination facility with expanded features.

If decommissioning is accomplished by mothballing, the above provisions will reduce to low levels the occupational radiation exposure to personnel. According to Regulatory Guide 1.86, this method involves "putting the facility in a state of protective storage." In general, the facility may be left intact except that all fuel assemblies and the radioactive fluids and waste should be removed from the site.

If entombment is chosen as the method of decommissioning, the previously described plant design facilities are adequate to accomplish the tasks with low occupational radiation exposure to personnel. The additional requirements described in Regulatory Guide 1.86 for "sealing all the remaining highly radioactive or contaminated components (e.g., the pressure vessel and reactor internals) within a structure integral with the biological shield after having all fuel assemblies, radioactive fluids and wastes, and certain selected components shipped offsite" can be met. The necessary modifications to the Columbia Generating Station primary containment structure are shown in Figure 12.3-22.

Low occupational radiation exposure to personnel can be achieved if the decommissioning method adopted is that of immediate removal/dismantling of the plant. For example, the laydown area, el. 606 ft 10.5 in., in the reactor building is provided with a drainage system. There the drywell head and the reactor pressure vessel head can be decontaminated if it is required. Furthermore, there is ample space to erect a contamination control envelope around them during their segmentation for transportation and burial. The plant design accommodates the cutting of the reactor internal under water and within contamination control envelopes. The turbidity of the water can be reduced by using the RWCU system. The only modification that might be required to the existing system could be the installation of a strainer for the removal of large filings or other large size contaminants. The highly radioactive pieces can be transferred under water to the cask loading area in the spent fuel pool by methods similar to loading spent fuel. The airborne radioactivity generated by the dismantling process can be removed by the filtration systems that the contaminated control envelopes can have and/or by the standby gas treatment system (SGTS).

12.3.1.4 Radioactive Material Safety

12.3.1.4.1 Materials Safety Program

Columbia Generating Station has a program to ensure the safe storage, handling, and use of sealed and unsealed special nuclear source and byproduct materials. Included in the program are procedures for the following:

a.	Receiving and opening shipments as required by 10 CFR 20.1906,
b.	Storage of licensed materials as required by 10 CFR 20.1801 and 20.1802,
c.	Inventory and control of radioactive materials,
d.	Posting of radioactive material storage areas and tagging of source,
e.	Leak tests - sources are checked for leakage or loss of material at least semiannually, and
f.	Disposal - all licensed material disposals are in accordance with 10 CFR Part 20 requirements or by transfer to an authorized recipient as provided in 10 CFR Parts 30, 40, or 70.

12.3.1.4.2 Facilities and Equipment

Facilities are provided for handling unsealed sources, such as the liquid standard solutions used for calibration of plant instrumentation. The radiochemical laboratory is equipped with a negative pressure fume hood with filtered exhaust. The hood work surface is designed to withstand heavy weights so that shielding can be provided in the form of lead brick. Drains from the fume hood are routed to the liquid radwaste system.

Remote handling tools are used as needed for movement of the high level sealed sources from their normal storage containers. Shielding to reduce personnel exposure is provided for these sources when they are not in use and to the extent practicable while they are in use.

Portable radiation and contamination monitoring instrumentation is provided, as described in Section 12.5.2, for surveillance to maintain control of the sources.

12.3.1.4.3 Personnel and Procedures

The Columbia Generating Station Chemistry/Radiological Services Director/Radiation Protection Manager (RPM) is responsible for the control and monitoring of sealed and unsealed source and byproduct materials. The Nuclear Material Manager appointed by the Engineering Manager is accountable for special nuclear materials (SNM). The Chemistry/Radiological Services Director/Radiation Protection Manager is responsible for the minimization of radioactive waste and the preparation, offsite shipment, and disposal of radioactive materials and radwaste. Monitoring during handling of these materials is provided by Radiation Protection. Experience and qualifications of Radiation Protection personnel are described in Section 13.1.

Health Physics requirements and instructions to personnel involved in handling byproduct materials are included in implementing procedures.

12.3.1.4.4 Required Materials

Any byproduct, source, or special nuclear materials in the form of reactor fuel, sealed neutron sources for reactor startup, sealed sources for reactor instrument and radiation monitoring equipment calibration, or as fission detectors, will be limited to the amounts required for reactor operation or specific calibration purposes except as noted in the facility operating license.

12.3.2 SHIELDING

12.3.2.1 General

The radiation shielding design is in compliance with all NRC regulations concerning permissible radiation doses to individuals in restricted and nonrestricted areas. The guidance provided in Regulatory Guide 1.69 on concrete radiation shields is followed to the extent discussed in Section 1.8. The guidance provided in Regulatory Guide 8.8 on radiation protection is followed to the extent discussed in Section 12.1.2. The plant design and layout optimizes personnel and/or equipment protection. Shielding is supplemented with whatever administrative control procedures are necessary to ensure regulatory compliance. These control procedures include area access restrictions, occupancy limitations, personnel monitoring requirements, and radiation survey practices. Other criteria and considerations are listed in Section 12.1.2.

The shielding design is evaluated under the following conditions of plant operation:

a. Operation at design power, including anticipated operational occurrences,

b. Shutdown conditions, with radiation from the subcritical reactor core, spent fuel assemblies, and other sources discussed in Section 12.2, and

c. Postaccident conditions, including those accident occurrences analyzed in Chapter 15. Emphasis is placed on control room habitability.

The majority of the shielding calculations performed are of the “bulk shielding” type. Ordinary concrete, having a density of about 150 lb/ft^3, is used for shielding except for special applications. In special applications, water, steel, high density concrete, lead, and permali JN P/3% boron are used.

The effects of mechanical or electrical penetrations in shield walls on radiation exposure to personnel is minimized by locating penetrations to preclude direct view of radiation sources through the penetration. The effect of penetrations in shield walls is also minimized by keeping penetration openings to the smallest practicable size. Penetrations are located away

from immediate areas with personnel access. When these criteria cannot be implemented, penetrations are offset.

Access into shielded areas is, in general, by labyrinths. Labyrinths are located to preclude direct personnel radiation exposure. Where labyrinths are not practicable, shield doors are used. Knock-out walls for equipment removal are constructed of brick arranged in staggered rows to preclude direct streaming.

Portable and removable shielding devices are used when practical and feasible. Portable shielding devices are easily moved from one location to another. Removable shielding devices are normally used at specific locations and can be removed when necessary. The reactor vessel to fuel pool transfer passage is a location where removable shielding is employed primarily for the protection of personnel working in the drywell. Personnel evaluation of the affected drywell area may be employed instead of, or in conjunction with, the above mentioned shielding.

12.3.2.2 Methods of Shielding Calculations

Standard methods are used in computing the required shielding thickness for a given source. These methods are described in References 12.3-1 through 12.3-4. Specific methods of calculation and the computer codes used in the shielding design are discussed below.

The NRN computer code (Reference 12.3-5) is used to determine the shielding requirements for the core generated neutrons and to calculate the thermal neutron flux used to determine captured gamma sources outside the core. This code is based on a multigroup slowing down and diffusion system corrected by a multigroup first flight or removal neutron source. The neutron cross sections used with this code are from Oak Ridge National Laboratory with modifications which have resulted from comparisons with data in BNL-325 (Reference 12.3-6) and the ENDF/B data libraries.

The QAD-BR computer code, which is based on the QAD-P5 code (Reference 12.3-7), is the basic code used to determine shielding requirements for gamma ray sources. This code provides gamma flux, dose rate, energy deposition, and other quantities which result from a point by point representation of a volume distributed source of radiation. Attenuation coefficients for water, iron, and lead, used in this program are taken from the Engineering Compendium for Radiation Shielding (Reference 12.3-1). Concrete attenuation coefficients are taken from ANL-6443 (Reference 12.3-8).

Any shielding requirements which are not determined with the QAD code were determined by using the methods discussed in the Reactor Shielding Design Manual (Reference 12.3-2). The various sources are reduced to their basic geometric configuration (line, disc, cylinder, sphere, etc.) and the corresponding equations are solved to find the dose. The Taylor exponential form

of the buildup factor is used in these equations. All required data is taken from Reference 12.3-1.

The criteria for penetration acceptability is based on the radiation zone levels in the areas separated by the wall where the penetration is located. The penetration is analyzed if the penetration passes from Radiation Zone IV to Zones III, II, or I; or, if the penetration passes from Radiation Zone III to Zones II or I. This analysis considers both the scattered as well as the direct radiation. The direct component is calculated using the point source attenuation equation, as described in the Reactor Shielding Design Manual (Reference 12.3-2). The scattered component is calculated using the Chilton-Huddleston equations (Reference 12.3-9). Compensatory shielding (e.g., labyrinths, steel plate, lead wool) is used as needed, to reduce radiation streaming through penetrations and to protect against localized "hot spots."

The general dose rate in each plant area, including contributions from radiation streaming, satisfies the design dose rate specified for that area.

Entrances to shielding cubicles are designed to prevent source radiation from passing directly through the opening. Whenever possible, a labyrinthine entrance is designed to reduce the emerging radiation to a level compatible with the access requirements outside the cubicle. The scattered and direct components of the emerging radiation are calculated by the above methods.

12.3.2.3 Shielding Description

12.3.2.3.1 General

The description of the shielding throughout the entire plant is summarized within the following sections. These descriptions are to be used in conjunction with the radiation zone maps, Figures 12.3-5 through 12.3-18, to locate the process equipment which is shielded and to determine the design dose rate.

12.3.2.3.2 Reactor Building

The sacrificial shield is an ordinary concrete structure 2 ft thick, lined on the inside and outside by steel plates of a minimum thickness of 0.5 in. each. The sacrificial wall extends between el. 519 ft 2.25 in. and 567 ft 4.5 in.

The biological shield wall protects station personnel in the reactor building from radiation emanating from the reactor vessel. The dose rate at the outer face of the biological shield as well as above the shield plug (above the reactor vessel) is, except at penetrations, less than 2.5 mrem/hr during normal reactor operation. The reactor core is the primary source of radiation, and it is used in computing the above dose rate. The wall is in the shape of a shell of the frustum of a cone, and its composition is ordinary concrete at least 5 ft thick. Inside the biological wall exists the primary containment vessel which has the same shape as the wall.

The primary containment vessel is made of 0.75 in. minimum steel plate. The ^{16}N contained in the recirculation system, the main steam lines, and the water in the vessel below the core along with the fission process in the core constitute the major sources of radiation used to determine the radial dose rate. The shielding arrangement for the other major sources in the reactor building is shown on Figures 12.3-15 through 12.3-18.

Personnel evacuation of the affected drywell area(s) and/or employing removable shielding at the fuel pool passage are two methods used for personnel protection in the drywell during fuel handling operations. The shielding is designed such that radiation levels are no greater than 100 R/hr at contact. Portable locally alarming radiation monitors and/or direct Health Physics monitoring are employed for additional personnel protection.

12.3.2.3.3 Turbine Building

In the turbine building, ^{16}N constitutes the major source of radiation and basis for shielding design. It is contained in the turbines, moisture separator reheaters, and the feedwater heater system that are located in the turbine access areas at el. 501 ft 0 in. and 471 ft 0 in. These areas are surrounded by ordinary concrete walls at least 3.5 ft thick. The dose rate to the areas outside these walls is less than 2.5 mrem/hr.

The walls which surround the turbine-generator access area at el. 501 ft 0 in. extend up to 524 ft 0 in. This minimizes the effects of direct radiation streaming at the site boundary.

The shielding arrangement for the major sources of radiation in the turbine building, including those discussed above, are shown in Figures 12.3-5 through 12.3-10.

12.3.2.3.4 Radwaste Building

The shielding arrangement for the major sources in the radwaste building are shown in Figures 12.3-11 through 12.3-14.

12.3.3 VENTILATION

The plant ventilation systems for the different areas of the plant are designed to meet the requirements of 10 CFR Parts 20 and 50. Gaseous wastes will be released in a controlled manner to environs such that during plant operation, onsite and offsite radioactivity levels are ALARA. The design features which limit and reduce the airborne radioactivity are as follows:

a. In the reactor, radwaste, and turbine generator buildings the air flow is from areas of low airborne radioactivity potential to areas of higher airborne radioactivity potential. This serves to isolate and segregate airborne radioactivity which may be released due to equipment failure or malfunction and leakage from fluid systems;

b. To prevent radioactivity buildup, all ventilation air is supplied to the reactor, turbine, and radwaste buildings on a once through basis;

c. All cubicles housing equipment which handles radioactivity contaminated material are ventilated at a minimum rate of three volume air changes per hour;

d. All sinks and chemical laboratory work areas where radioactive samples or materials are handled are provided with exhaust hoods to protect operating personnel from airborne contaminants;

e. All liquid equipment leaks which are potential sources of airborne radioactivity in the reactor building are collected in the reactor building equipment drain system. The drain system is maintained at a negative pressure with respect to the balance of the building to protect operating personnel from airborne leakage generated in the system sumps. All exhaust air drawn from the reactor building equipment drain system is filtered by absolute particulate and charcoal filters. The particulate and charcoal filters minimize the release of contaminated particulates and iodine; and

f. The primary containment purge system reduces airborne radioactivity within the drywell to acceptable levels prior to entry of working personnel. The level of radioactivity released to the environment during normal primary containment purge will not exceed the requirements of 10 CFR Part 20 Appendix B. When airborne radiation levels in the primary containment are too high to allow direct purging to the atmosphere through the reactor building exhaust, purge air at a reduced flow rate is passed through the SGTS prior to exhaust. In this latter mode, airborne iodine and particulates are removed from the purge exhaust air prior to release;

The air cleaning systems which utilize special filtration equipment to limit airborne radioactive contaminants are

a. Standby gas treatment system (see Section 6.5),
b. Control room emergency filtration system (see Sections 9.4 and 6.4),
c. Reactor building sump vent exhaust filter system (see Section 9.4), and
d. Radwaste building exhaust filtration system (see Section 9.4).

In addition, small local absolute particulate filters are used to locally filter the effluent from sample sink hoods and chemical hoods. These small filter units are all described in Section 9.4.

The SGTS filter units discussed in Section 6.5.1 and the control room emergency filter units discussed in Sections 6.4 and 9.4.1 are the only engineered safety feature (ESF) filtration systems. A detailed evaluation of these units with respect to Regulatory Guide 1.52 is given in Section 1.8. The balance of the filtration systems meet the intent of Regulatory Guide 1.52 with the following deviations:

a. Reactor building sump vent filter units

These units are composed of demisters, an electric heater, a medium efficiency prefilter, an absolute particulate (HEPA) filter and tray type adsorber filters composed of 2-in. deep charcoal beds in a sheet metal housing. These units do not have absolute particulate filters downstream of the adsorber section as described in Regulatory Guide 1.52.

The 5-ft spacing between filter frames, as required in Regulatory Guide 1.52, is not provided in these units. These units are of low capacity (1000 cfm), and personnel access into the units for servicing and testing is not possible. Access panels are provided for servicing and removal of all unit components. Sufficient space is provided between elements to permit removal of any element without disturbing any other element.

b. Radwaste building exhaust filter units

These three units are composed of medium efficiency prefilters, absolute particulate (HEPA) filters and centrifugal fans in a sheet metal housing. Unit capacity is 42,000 cfm, which is in excess of the 30,000 cfm maximum capacity recommended in Regulatory Guide 1.52. These units are composed of a 5 filter high by 8 filter wide array. Permanent service platforms are provided on both sides of the HEPA filters at an intermediate height for operating personnel during filter testing and service.

Absolute particulate (HEPA) filter and charcoal adsorber filters will be tested periodically to ensure continued filter efficiency as discussed in Sections 6.5.1.4, 9.4.2.4, and 9.4.3.4.

Figure 12.3-23 (el. 572 ft 0 in.) shows the layout of the SGTS filter units. The concrete wall between the units serves as both a fire wall and missile barrier between the two filter trains. Access doors, 20 in. x 50 in., are provided into each plenum section between unit elements. Ample aisle space is provided outside the units for ease of access for personnel to perform tests and maintenance. Charcoal test canisters are provided as shown in Figure 12.3-23. There are

12 test canisters per 4-in. deep filter bed. Dioctylphthalate (DOP) and freon injection and detection ports are provided as shown.

12.3.4 IN-PLANT AREA RADIATION AND AIRBORNE RADIOACTIVITY MONITORING INSTRUMENTATION

12.3.4.1 Criteria for Necessity and Location

The objectives of the in-plant area radiation and airborne radioactivity monitoring systems are to

a. Warn of excessive gamma radiation levels in areas where nuclear fuel is stored or handled,

b. Provide operating personnel with a record and indication in the main control room of gamma radiation levels at selected locations within the various plant buildings,

c. Provide information to the main control room so that decision may be made with respect to deployment of personnel in the event of a radiation accident or equipment failure,

d. Assist in the detection of unauthorized or inadvertent movement of radioactive material within the various plant buildings,

e. Provide local alarms at selected locations where a substantial change in radiation levels might be of immediate importance to personnel frequenting the area,

f. Monitor areas having a high potential for increase gamma radiation levels where personnel may be required to work,

g. Supplement other systems including process radiation leak detection or building release detection in detecting abnormal migrations of radioactive materials from process streams,

h. Monitor the general conditions in the reactor building following an accident, and

i. Furnish information for making radiation surveys.

No credit is taken for the operability of the in-plant area radiation and airborne radioactivity monitors in the event of an accident. However, the probability is high that many or all of the 13 area monitors in the reactor building will be operable. These monitors have local sensors in separate physical locations within the reactor building. The wiring from the local sensors is

run to the main control room in cable runs that have Seismic Category I qualified supports. The electrical supply for the area monitor indicator and control room alarms in the main control room are powered from a critical 120-V ac supply. The local audible alarms are powered from a local ac supply and its loss would not impact control room readings. The sensors are designed to maintain operability and accuracy in atmosphere up to 95% RH, and temperature to 50°C.

12.3.4.2 Description and Location

a. Area radiation monitors

Area radiation monitors consist of local detector alarm units and main control room mounted indicator trip units, alarms, and recorders. Redundant criticality monitors are located in the reactor building new fuel storage pit as recommended by Regulatory Guide 8.12. When practicable and feasible the guidance in Regulatory Guide 8.12 has been followed. Major items in Regulatory Guide 8.12 have been addressed and include

1. Employing two detectors in the new fuel vault,

2. Emergency planning that includes both the Emergency Plan and the Emergency Plan Implementing Procedures, evacuation routes, assembly areas, and yearly drills, and

3. Surveillance testing of criticality alarm systems, including procedures that address methods and frequency of testing.

10 CFR 50.68(b) requires radiation monitors in storage and associated handling areas when fuel is present to detect excessive radiation levels and to alert personnel to initiate appropriate safety actions.

Other detector locations have been selected in accordance with good operating practice and from past operating experience with similar plants. Detector locations are shown in Figures 12.3-5 through 12.3-18. Annunciations are given in the main control room and locally at the sensors when radiation levels exceed a predetermined level. Point indication and recording are provided for in the main control room. Local detectors are wall-mounted approximately 7 ft off the floor. The detectors have sufficient cable length to be taken from their normal positions to floor level for insertion into calibrating chambers to verify instrument accuracy. Direct-reading dosimeters, worn by individuals in

radiologically controlled areas, provide protection in areas where area radiation monitors have not been installed.

An additional area radiation monitor is installed on the refueling bridge during bridge operation to provide personnel protection. This monitoring system provides local indication, visual, and audible alarm.

There is no area radiation monitor in the area of the radwaste building where the waste containers are filled and stored. Waste containers will normally be processed either "in cask" or in the shielded waste storage bay.

The location and ranges of the 31 area radiation monitors are given in Table 12.3-1. Table 12.3-2 lists the maximum background radiation levels for the area radiation monitors in the reactor building based on design basis calculation.

b. Airborne radiation monitors

Airborne radioactivity monitoring for plant personnel protection and surveillance uses fixed location, continuous particulate monitors which include continuous iodine samplers; portable continuous particulate monitors with continuous iodine samplers positioned at specific work sites; and particulate and iodine grab samples taken before and during specific jobs.

Movable local alarming continuous air monitors are placed at predetermined plant locations for personnel protection and to substantiate the quality of the plant breathing atmosphere. The monitors have local readouts (charts) and have radioiodine sampling capabilities.

The installed continuous particulate monitoring system was designed for responsive personnel protection and plant surveillance. The three installed particulate monitors measure the airborne particulate activity levels in the radwaste and reactor building ventilation exhaust and furnish recording signals to the main control room. These units draw approximately 3 cfm air sample through the particulate filter which is monitored by a shielded beta detector with an efficiency of approximately 30%. The resultant response of the system is an increase of about 350 cpm for 1 hr of sampling at a 1×10^{-10} $\mu Ci/cm^3$ concentration. External gamma radiation will increase the background by 70 cpm/mrem/hr.

The actual ability of a ventilation exhaust monitoring system to detect the airborne particulate concentration in a specific space is dependent on the following factors:

1. Flow rate ratio (flow of air from a specific confined space/flow rate of bulk ventilation system exhaust),

2. Particulate activity and its half-life of the bulk ventilation system exhaust air,

3. Radionuclide composition in the specific confined space, and

4. The energy of the beta radiation from the radionuclide composition.

Normal plant conditions are expected to yield a bulk ventilation exhaust air concentration (primarily short-lived fission product daughters and natural activity half-life about 20 minutes) of 1-3 x 10^{-10} $\mu Ci/cm^3$. This will reach an equilibrium on the sample filter of about 500 cpm. The MPC_a for normal plant airborne contamination is expected to be greater than 6 x 10^{-8} $\mu Ci/cm^3$. At this MPC_a concentration a 1-hr accumulation (one MPC_a-hr) will equal 2.0 x 10^5 cpm. Applying a dilution factor of 270:1, the 1-hr accumulation will equal 750 cpm. This is a worst case dilution that considers the reactor building TIP Drive room at 400 cfm in the 105,000 cfm building bulk exhaust flow. Therefore, the ventilation monitoring system will easily detect 10 MPC_a-hr on all locations.

Local particulate constant air monitoring instruments and a comprehensive (particulate, noble gases, and iodine) grab air sampling program complement the plant air sampling program. Under these conditions, corrective actions will be taken and an assessment by portable sampling system results and portable monitoring activities will establish activity levels in all occupied areas which have potential for abnormal airborne activity.

In the radwaste building, the potentially contaminated areas normally entered by people would be those corridors adjacent to radioactive liquid and gaseous waste processing systems equipment such as demineralizers, concentrators, waste storage tanks, recombiners, dryers, moisture separators, and charcoal holdup vessels. Assuming that exfiltration from any one of the process systems to a normally entered corridor was sufficient to attain MPC_a levels for ^{137}Cs in that corridor, the dilution ratio would approach a factor of 10 to 100. For the worst case (100 to 1 ratio of bulk ventilation flow rate to corridor flow rate), ^{137}Cs at MPC_a (6 x 10^{-8} $\mu Ci/cm^3$) would be detected within 1 hr on the continuous particulate monitor. If exfiltration from a process vessel cubicle was sufficient to produce MPC_a levels in an adjoining corridor, it is more probable that the normal cubicle flow rate input to the bulk ventilation flow would produce a prior distinguishable countrate ramp.

In the turbine building, airborne contamination is most likely to arise from nuclear steam leaks or offgas processing systems piping. Heater bay areas, steam jet air ejector rooms, turbine areas, and steam-driven feedwater pump areas have the potential for airborne contamination. Regular radiological surveys in the turbine building are not augmented by continuous particulate monitoring of the turbine building ventilation exhaust.

Each of the continuous particulate monitors has an associated iodine sampling cartridge which is counted regularly for baseline and surveillance information. This cartridge and iodine sampled/collected with portable sampling devices will be analyzed in the plant laboratory counting facility when abnormal airborne activity levels are signaled by a continuous particulate monitoring system. At a 5 cfm air flow rate through an iodine sampling cartridge, iodine present at an occupational MPC_a concentration of 9×10^{-9} $\mu Ci/cm^3$ would be quantitatively observable within a 1-minute sample interval. Bases for this assessment are a 10-minute count time on a 12-15% Ge(Li) detector system having an overall efficiency of about 1% when source and geometry considerations are included. The information presented for detecting one MPC_a concentration for ^{137}Cs in areas having a low ventilation flow rate can also be applied to the iodine case. One MPC_a of iodine can be ascertained within a 1-hr sampling period with a dilution factor of greater than 100. The routine weekly analysis of integrated iodine samples of radwaste, reactor, and turbine building ventilation air will permit observation of small iodine inputs. When these inputs are significant, a particulate and iodine sampling program is initiated to establish the source point.

Continuous particulate monitoring is reasoned to be the most responsive personnel protection and internal plant surveillance mechanism available. In addition, all tasks with potential for generating airborne contamination will be performed only when authorized by a radiation work permit (RWP).

The RWP assesses the radiological hazards, establishes additional monitoring and sampling requirements and, if necessary, specifies required engineering control and/or respiratory protection.

During outages, the above airborne monitoring system will be augmented by additional iodine sampling (continuous and grab) on the refueling floor since airborne iodine concentrations are known to become significant at this time.

12.3.4.3 Specification for Area Radiation Monitors

The area radiation monitoring system is shown as a function block diagram in Figure 12.3-24. Each channel consists of a sensor and a converter unit, a combined indicator and trip unit, a shared power supply, and a shared multipoint recorder. All channels also have a local meter and visual alarm auxiliary unit mounted near the sensor.

Each monitor has an upscale trip that indicates high radiation and a downscale trip that indicates instrument failure. These trips actuate alarms but cause no control function. The trip circuits are set so that a loss of power annunciates in the control room.

The type of detector used is a Geiger-Mueller tube responsive to gamma radiation over an energy range of 80 KeV to 7 MeV. Detector ranges are given in Table 12.3-1.

Area radiation monitors are calibrated at a set frequency to ensure intended accuracy using standard sources with National Institute of Standards and Technology (NIST) traceability per PPM program.

An internal trip test circuit, which is adjustable over the full range of the trip circuit, is provided. The test signal is fed into the indicator and trip-unit input so that a meter reading is provided in addition to a real trip. High-range radiation alarm trip circuits for high level and criticality monitors are of the latching type and must be manually reset at the front of the control room panel. The trip circuits for all other area radiation monitors are of the nonlatching type.

12.3.4.4 Specification for Airborne Radiation Monitors

The airborne particulate monitors contain scintillation detectors with count ratemeters. Means for remote recording are provided for in the main control room. Sample collectors consist of shielded, fixed particulate, filter-type air collectors. The calibration frequency will occur at least annually and after major maintenance. Instrument response checks will be made at least monthly. Monitors will be calibrated using standard radioactive sources in the same geometry as the location of the particulate filter or by collection and analysis of mixtures present at known air flow rates. Particulate monitors are provided in the reactor and radwaste buildings. The monitors are located so as to monitor the exhaust air from that building prior to any filtration. In addition, charcoal sampling cartridges are installed in each monitor for laboratory analysis of iodine.

Each of the three channels of the airborne radioactivity monitors has an independent local visual and audible alarm. High radioactivity or equipment failure will generate an alarm signal. No automatic system functions are performed by the alarm signals.

12.3.4.5 Annunciators and Alarms

The annunciators are of the window type with pushbutton switches for sound acknowledgment and light reset functions. There are no automatic system actions performed by the area radiation monitors. The annunciator alarm windows are located in the main control room.

Area monitors have local/remote alarms that sound on exceeding their high radiation alarm settings and remote alarms to indicate instrument failure (see Figure 12.3-24). Monitors located in the reactor building near the fuel pool and in the new fuel areas have individual high radiation alarm windows. The remainder of the area monitor units in the reactor building have a common annunciator window for high radioactivity. Area monitors in the turbine building and the radwaste building each have a common building high radioactivity alarm window. All the area monitors have one common alarm window for instrument failure.

The two area monitors that are used as criticality detectors are located in the new fuel vault. These monitors have a range of 10^{+2}-10^{+6} mrem/hr and alarm on either of a fully adjustable upscale or downscale trip point. The alarm setpoint and bases are given in the Licensee Controlled Specifications.

12.3.4.6 Power Sources, Indicating and Recording Devices

The area radiation monitor power supply units, indicating devices (except local alarms), and the recorders are all located on panels in the control room and receive power from the 120-V ac instrument power supply bus. The local audio alarms are supplied from a local 120-V ac instrument distribution panel. The recorder is a multipoint, strip chart type, which compiles a permanent record of inputs from the area radiation monitors.

12.3.5 REFERENCES

12.3-1 Jaeger, R. G. et al., Engineering Compendium on Radiation Shielding, Volume 1, Shielding Fundamentals and Methods.

12.3-2 Rockwell, T., Reactor Shielding Design Manuals, 1st Edition, D. Van Nostrand Co., Inc., New York, 1956.

12.3-3 Goldstein, H., Fundamental Aspects of Reactor Shielding, Addison-Wesley Publishing Co., Inc., Reading, 1959.

12.3-4 Blizard, E. P., Reactor Handbook, Vol. III, Part B, Shielding.

12.3-5 Aalto, E. et al., A Users Manual for the NRN Shield Design, AE-145, June 1964.

12.3-6 Hughes, D. J. and Schwartz, R. B., Neutron Cross Sections, BNL 325, 2nd Edition, 1958.

Hughes, D. J., Magurno, B. A. and Brussel, M. K., Neutron Cross Sections, BNL 325, wnd. ed., Supplement 1, 1960.

Stehn, John R. et al., Neutron Cross Sections, BNL 325, 2nd. Edition, Supplement 2, 1964.

12.3-7 Malenfant, Richard, QAD-A Series of Point Kernel General Purpose Shielding Program, U.S. Department of Commerce, LA-3573, Springfield, VA, 1966.

12.3-8 Walker, R. L., and Grotenhuis, M., A Summary of Shielding Constants for Concrete, ANL-6443, November 1961.

12.3-9 Chilton, A. B. and Huddleston, C. M., A Semiemperical Formula for Differential Dose Albedo for Gamma Rays on Concrete, Nuclear Science and Engineering, 17, 419-424, 1963.

Table 12.3-1

Area Monitors

Station	Location	Building Level (ft)	Range (mrem/hr)
1	Reactor building fuel pool area	606	10^2-10^6
2	Reactor building fuel pool area	606	1-10^4
3	Reactor building new fuel area	606	10^2-10^6
3A	Reactor building new fuel area 2	606	10^2-10^6
4	Reactor building control rod hyd equipment area E	522	1-10^4
5	Reactor building control rod hyd equipment area W	522	1-10^4
6	Reactor building equipment access area S	572	1-10^4
7	Reactor building neutron monitor system drive mechanical area	501	1-10^4
8	Reactor building SGTS filters area	572	1-10^4
9	Reactor building northwest RHR pump room	422	1-10^4
10	Reactor building southwest RHR pump room	422	1-10^4
11	Reactor building northeast RHR pump room	422	1-10^4
12	Reactor building RCIC pump room	422	1-10^4
13	Reactor building HPCS pump room	422	1-10^4
14	Turbine building turbine front standard	501	1-10^4
15	Turbine building entrance	441	1-10^4
16	Turbine building reactor feed pump area 1A	441	1-10^4
17	Turbine building reactor feed pump area 1B	441	1-10^4
18	Turbine building condensate pump area	441	1-10^4

Table 12.3-1

Area Monitors (Continued)

Station	Location	Building Level (ft)	Range (mrem/hr)
19	Main control room	501	$1\text{-}10^4$
20	Radwaste building valve room E	467	$1\text{-}10^4$
21	Radwaste building valve room W	467	$1\text{-}10^4$
22	Radwaste building sample room	487	$1\text{-}10^4$
23	Reactor building CRD pump room 10	422	$1\text{-}10^4$
24	Reactor building equipment access area (W)	471	$1\text{-}10^4$
25	Radwaste building hot machine shop	487	$1\text{-}10^4$
26	Radwaste building contaminated tool room	467	$1\text{-}10^4$
27	Radwaste building waste surge tank area	437	$1\text{-}10^4$
28	Radwaste building tank corridor area north	437	$1\text{-}10^4$
29	Radwaste building tank corridor area south	437	$1\text{-}10^4$
30	Radwaste building radwaste control room	467	$1\text{-}10^4$
32	Reactor building NE entrance	471	$10^{-1}\text{-}10^4$
33	Reactor building NW entrance	501	$10^{-1}\text{-}10^4$
34	Reactor building eastside	606	$10^{-1}\text{-}10^4$
35[a]	Reactor building refueling bridge	606	0.1-2000

[a] Item 35 is installed at its dedicated location on the refueling bridge prior to bridge operation. Alarm settings for all of the above monitors will be selected to provide indication of any abnormal increase in radiation levels while minimizing false alarms.

Table 12.3-2

Maximum Design Basis Background Radiation
Level for Area Monitors

ARM	Building Level (ft)	Maximum Design Basis Background Level (mrem/hr)
ARM-RE-1	606	100
ARM-RE-2	606	100
ARM-RE-3	606	100
ARM-RE-3A	606	100
ARM-RE-4	522	3000
ARM-RE-5	522	500
ARM-RE-6	572	100
ARM-RE-7	501	100
ARM-RE-8	572	100
ARM-RE-9	422	4000
ARM-RE-10	422	4000
ARM-RE-11	422	100
ARM-RE-12	422	3000
ARM-RE-13	422	100
ARM-RE-23	422	3000
ARM-RE-24	471	100
ARM-RE-32	471	100
ARM-RE-33	501	100
ARM-RE-34	606	100

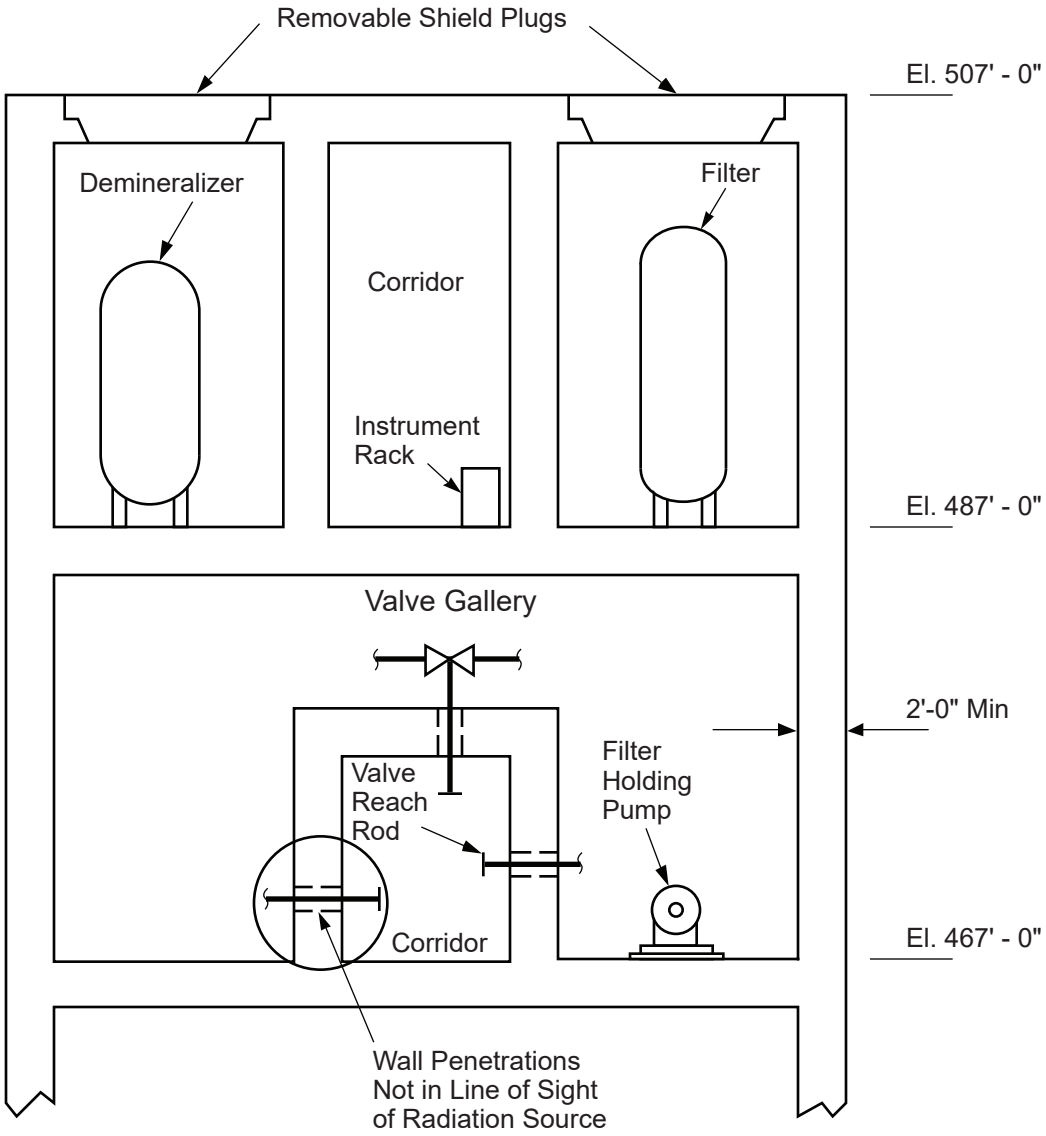

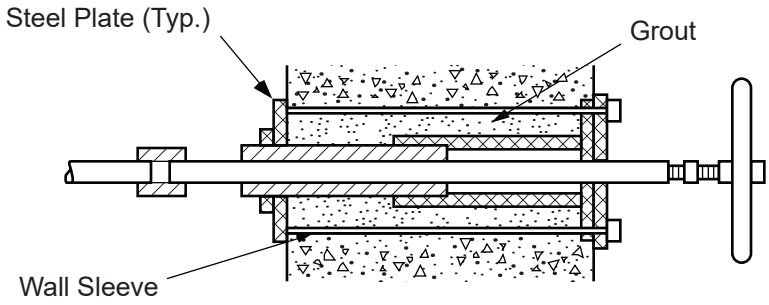

Penetration Detail

Columbia Generating Station **Final Safety Analysis Report**	**Arrangement of Filtration and Demineralization Equipment (Typical)**		
	Draw. No. **900547.52**	Rev.	Figure **12.3-19**

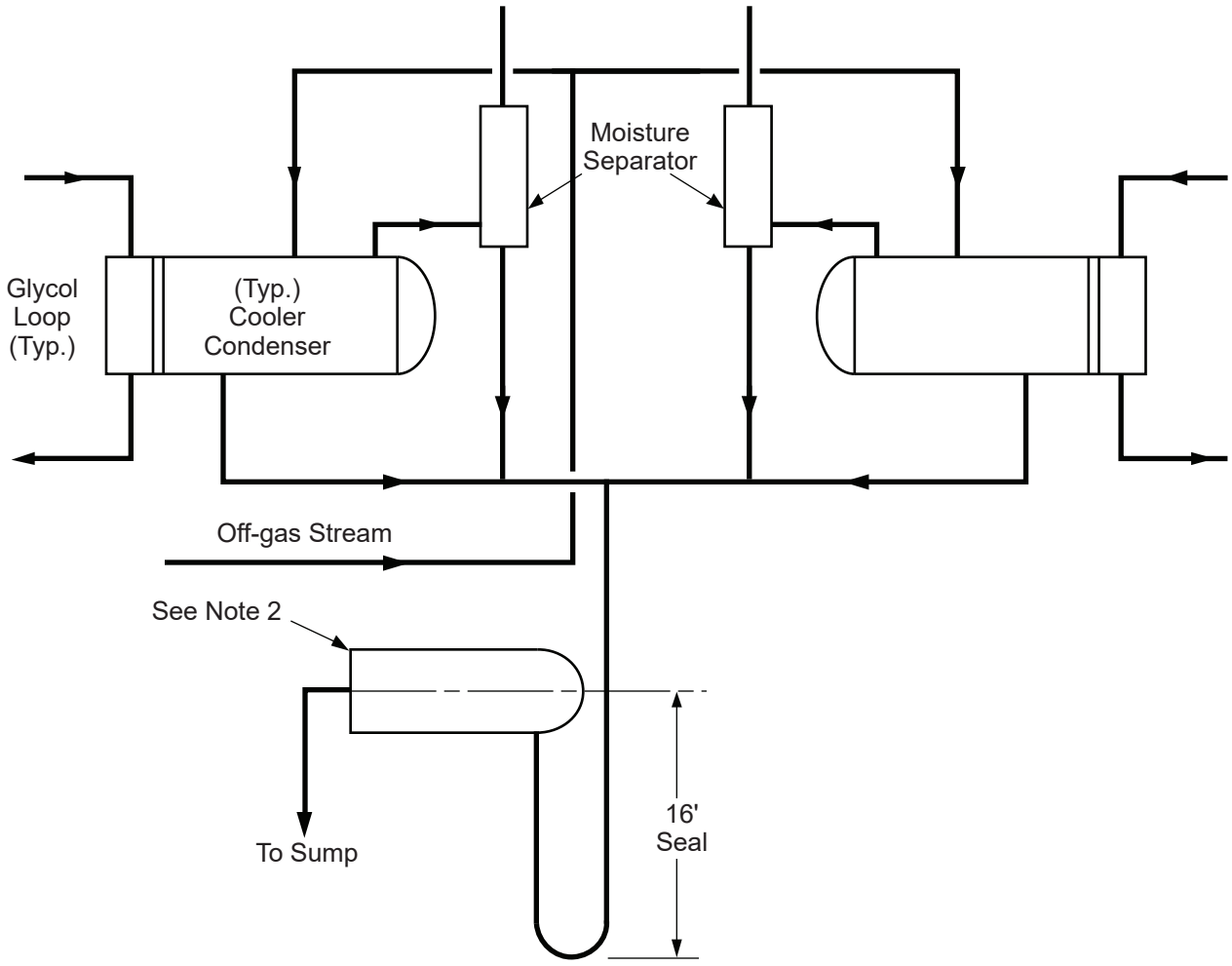

Notes:

1. Valves and instrumentation are not shown to prevent clutter.

2. Overflow volume in the enlarged discharge section is sufficient to restore loop seal following a pressure surge.

Columbia Generating Station Final Safety Analysis Report	**Schematic Arrangement of the Cooler Condenser Loop Seal**		
	Draw. No. **900547.53**	Rev.	Figure **12.3-20**

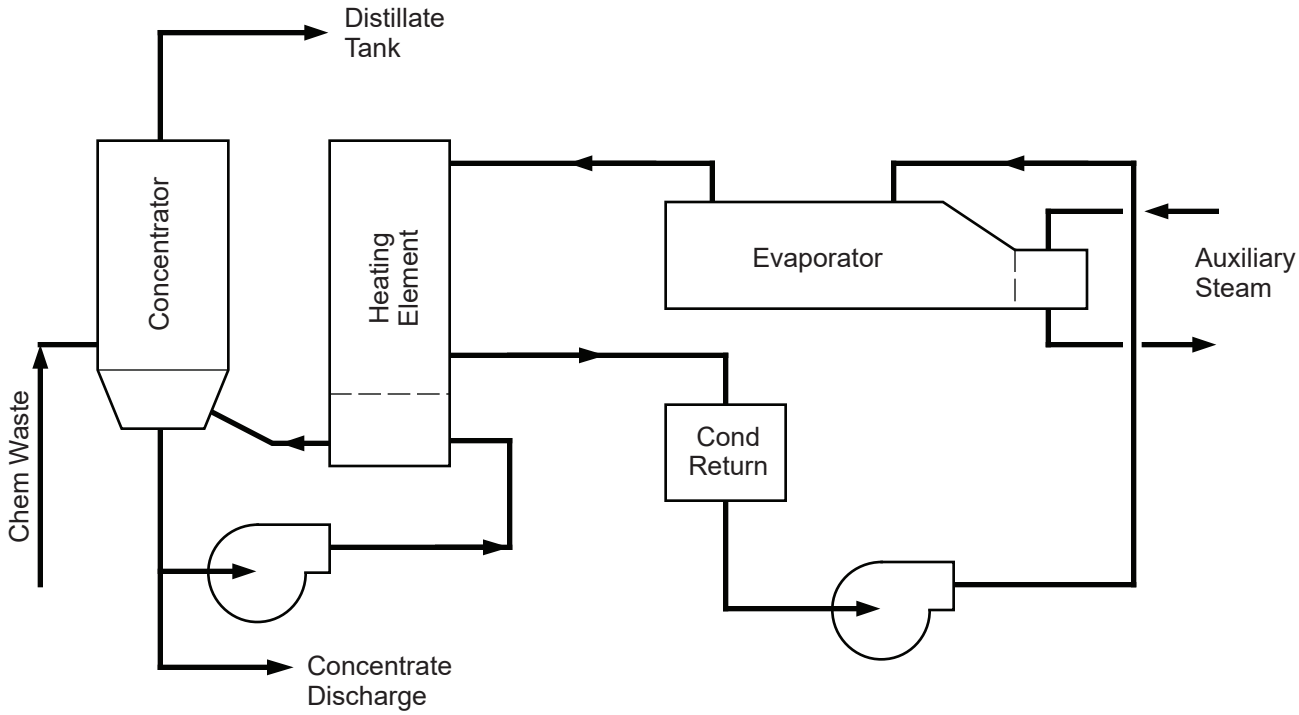

Columbia Generating Station Final Safety Analysis Report	Decontamination Concentrator Steam Supply Arrangement		
	Draw. No. 900547.54	Rev.	Figure 12.3-21

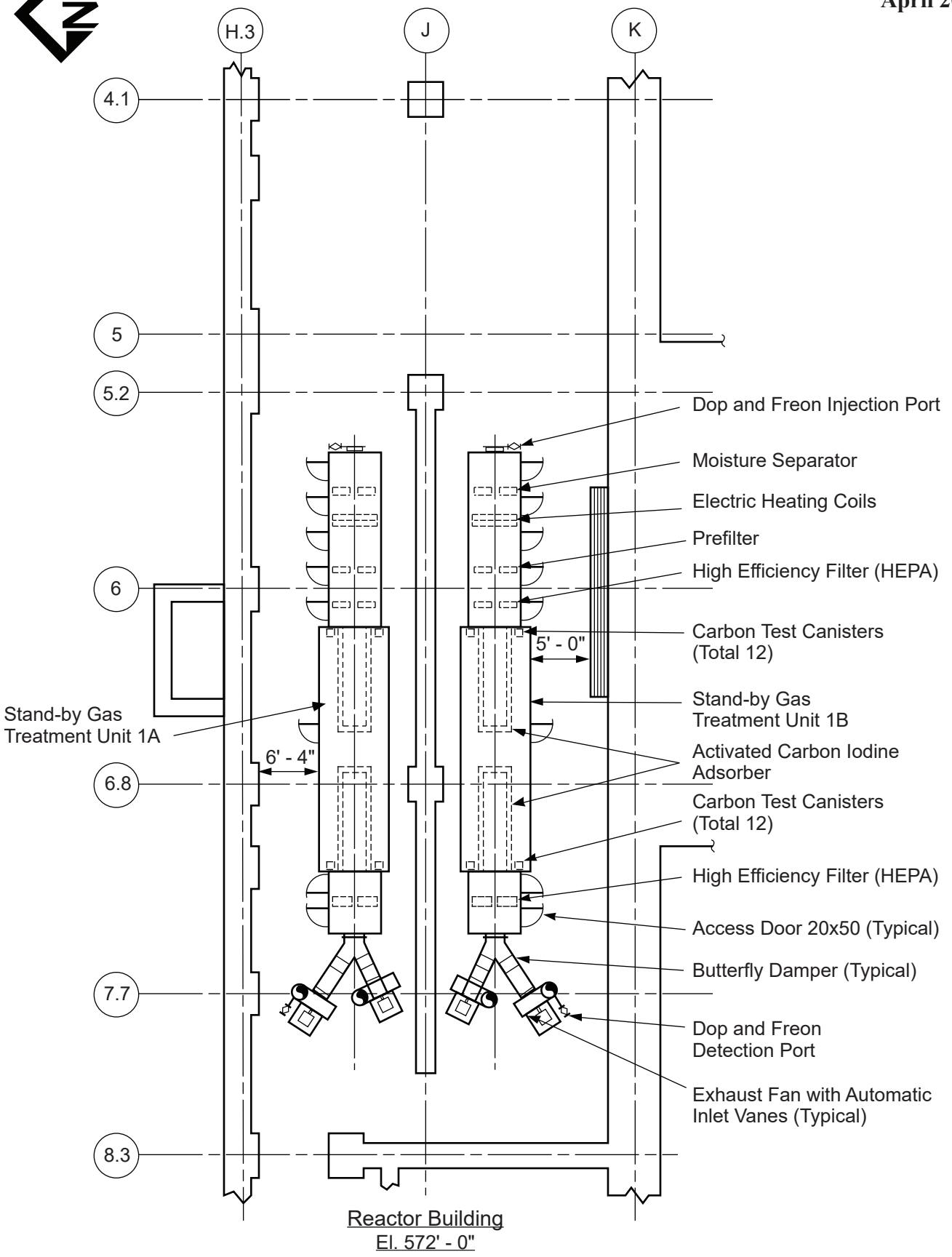

Columbia Generating Station
Final Safety Analysis Report

Layout of the Standby Gas Treatment System Filter Units

Draw. No. 900547.56	Rev.	Figure 12.3-23

GENERAL ELECTRIC
IED
919D693AD AREA RADIATION MONITORING SYS
HANFORD 2 238X173AD
FCF 239X247AD (D21-1010)

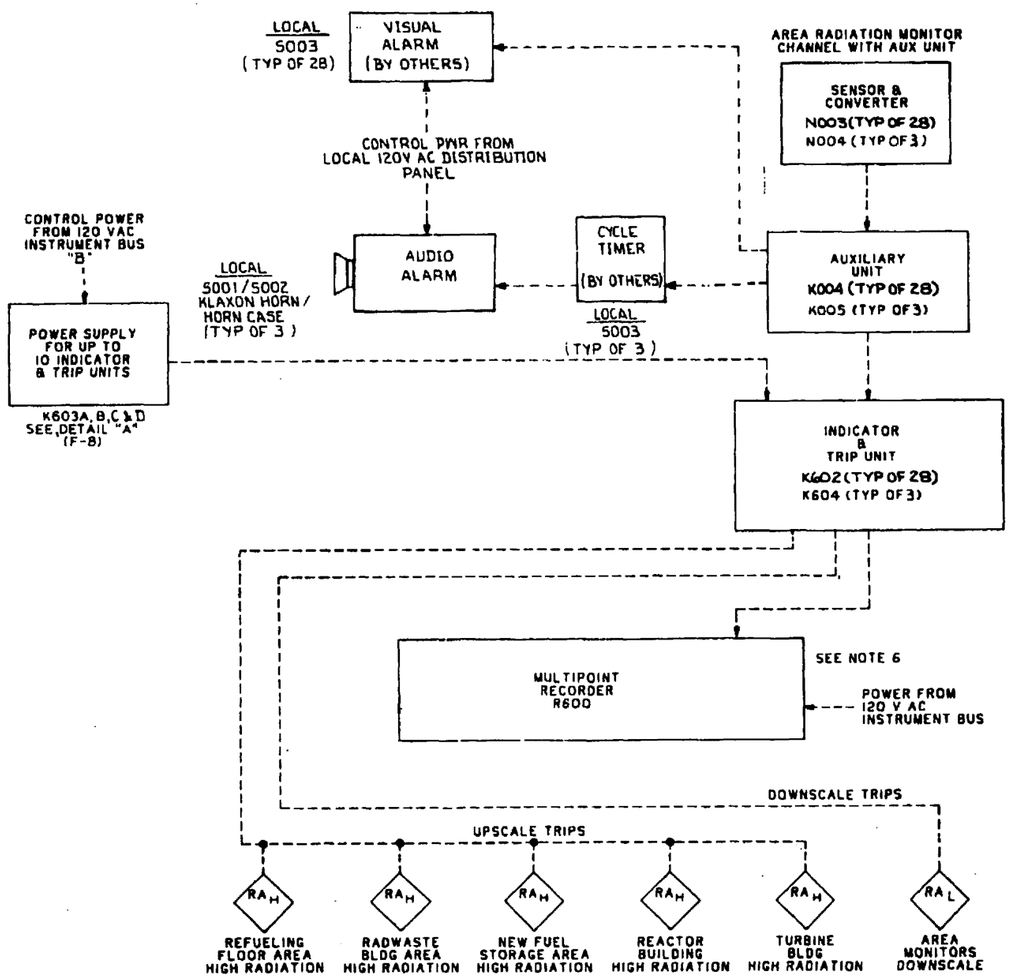

RANGE	QUANTITY (NOTE 1)		
MR / HR	SENSOR & CONVERTER	AUX UNIT	INDICATOR & TRIP UNIT
.01-100			
0.1-1000			
$1-10^4$	N003 (28)	K004 (28)	K602 (28)
10^2-10^5	N004 (3)	K005 (3)	K604 (3)

TABLE 1

INDICATOR & TRIP UNITS FOR EACH STATION PANEL D21-P600 (H13-P673) DETAIL "A"

NOTES:

1. RANGES CHOSEN BY PURCHASER ARE SHOWN ON D21-3050
2. REMOVED
3. REMOVED
4. CHANNEL CALIBRATED BY USE OF CALIBRATION UNIT K003. (NOT SHOWN)
5. FOR LOCATION & IDENTIFICATION OF INSTRUMENTS SEE INSTRUMENT DATA SHEET D21-3050.
6. RECORDERS ARE LOCATED IN PROCESS RADIATION RECORDER VERTICAL BOARD. (H13-P600)

REFERENCE DOCUMENTS

	MPL ITEM NO.
1. DES SPEC SPECIAL WIRE & CABLE	A62-4010
2. DES SPEC AREA RADIATION MONITORING.	D21-4010

(F)

Columbia Generating Station
Final Safety Analysis Report

Block Diagram - Area Radiation Monitoring System

Draw. No. 02D21-04,1,1 | Rev. 6 | Figure 12.3-24

Form No. 960690

12.4 DOSE ASSESSMENT

12.4.1 DESIGN CRITERIA

The criteria for the dose to plant personnel during normal operation and anticipated operational occurrences including refueling, are based on the requirements discussed in 10 CFR Part 20. The design radiation levels during normal operation and refueling are shown in Figures 12.3-5 through 12.3-18. In areas such as the control room and offices, the maximum dose rate does not exceed 1.0 mrem/hr (Zone I radiation level). For personnel who work in controlled radiation areas, radiation Zone II through IV in Figures 12.3-5 through 12.3-18, administrative controls ensure that doses do not exceed the requirements of 10 CFR Part 20.

12.4.2 PERSONNEL DOSE ASSESSMENT BASED ON BWR OPERATING DATA

The italicized information is historical and was provided to support the application for an operating license.

12.4.2.1 General

In general, data (Reference 12.4-1) from operating boiling water reactors (BWRs) have shown that the man-rem exposures to plant personnel are primarily due to the corrosion product isotopes. Of the corrosion product isotopes, ^{60}Co is believed to be the single most important radionuclide.

A review of the data from operating reactors was performed in References 12.4-6 and 12.4-7. Based on this it was concluded that the shielding design, which assumes the GE BWR design base source terms, was adequate to account for the additional radioactivity that will deposit in the lines due to crud.

Chemical cleaning connections were also installed on a number of systems. A chemical cleanup can be performed to reduce the deposits of crud and minimize the increase in radiation levels if needed. Section 12.3.1.3.2 addresses the design features that were incorporated to reduce the buildup of crud.

The variables that have been found to affect plant personnel exposure include the following:

a. The BWR plants show an increase in total personnel exposure during the first few years of operation,

b. The need to minimize plant downtime requires that inspection and repair tasks must be started immediately after plant shutdown when the dose rates from short-lived radionuclides can be significant,

c. Plant design and equipment layout has a significant effect on personnel dose. Section 12.3.1 discusses the design features used to minimize plant personnel exposure,

d. Training and experience of plant workers,

e. The extent of maintenance operations required for a specific year, and

f. The extent that a utility uses non-regular or contractor personnel.

12.4.2.2 Personnel Dose from Operating BWR Data

References 12.4-1 through 12.4-5 provide a tabulation of personnel exposures for operating BWRs. Table 12.4-9 tabulates the average personnel exposure for operating BWRs for the period 1969 through 1980. References 12.4-4 and 12.4-5 provide more recent information. The assessments of personnel exposures summarized in Section 12.4.2.3 include this more recent information.

12.4.2.3 Occupancy Factors, Dose Rates, and Estimated Personnel Exposures

A summary of the total estimated man-rem doses broken down by major function is given in Table 12.4-1. More detailed breakdowns are presented in Tables 12.4-2 through 12.4-8 for each of the seven major functions given in Table 12.4-1. These tables are based on the more recent information obtained from industry operating experience. The data from Table 12.4-9 is given for comparison purposes only.

The results of the total estimated man-rem doses will be discussed with reference to six occupational groups as follows:

a. Group 1 - This group includes maintenance personnel such as mechanical, electrical, instrument craftsmen, and Foreman. There are approximately 128 people is this group. Tables 12.4-4 and 12.4-8 provide the functional breakdown of exposures for this occupational group. As can be seen from the tables, 433 total man-rem may be expected.

Routine and special maintenance operations which include control rod drive repairs, residual heat removal (RHR) repairs, snubber maintenance, etc., account for approximately 60% of the average annual personnel dose. One to two rem per year per person is projected for the station maintenance personnel for a maximum total of 256 man-rem per year. Accordingly, the remaining 175 man-rem per year would be expected to be received by non-station maintenance personnel. As discussed in Section 12.3.1, the equipment layout

and design and shielding design are such that the exposures are as low as is reasonably achievable (ALARA).

b. *Group 2 - This group includes plant operations personnel composed of supervisors, control room staff and plant equipment operators. There are approximately 60 people in this group. Tables 12.4-2, 12.4-3, 12.4-5, and 12.4-6 show the total estimated man-rem for this group. As can be seen, the total is approximately 130 man-rem per year or approximately 2.2 rem per year per man. Personnel in this group will be performing routine and non-routine operation and surveillance, waste processing and refueling operations. In plant operations, personnel are expected to receive approximately one to two rem per year per man for a maximum total of 120 man-rem per year. The remaining 10 man-rem per year may be expected to be received by non-station personnel. As part of this total, the supervisors and control room staff are expected to receive an exposure of less than 500 mrem/yr.*

c. *Group 3 - This group includes health physics and chemistry personnel. There are approximately 53 people in this group. If the plant chemistry personnel spend 1% of their time collecting samples in Zone III sampling stations. They will receive a maximum dose of 723 mrem/yr. Assuming the remainder of their time is spent in Zone I and Zone II areas, the total dose is between 1 and 2 rem per person. The health physics personnel conduct radiation surveys and support maintenance activities which require continuous and pre-job radiation surveys. The exposure to these health physics personnel ranges from 2 to 3 rem/yr. This is based on experience from operating plants. Assuming a dose of 3 rem per person per year and considering 35 health physics people in the group, the total is 105 man-rem per year. Since this group covers virtually all functions delineated in Tables 12.4-2 through 12.4-8, this 105 man-rem is considered to be spread out across all the functions.*

d. *Group 4 - This group includes engineers and technical supervisors. There are approximately 27 people in this group. Personnel in this group will spend most of their time in Zone I areas where exposures are less than 500 mrem/yr. Table 12.4-7 indicates approximately 153 man-rem per year will be experienced for inservice inspection. Plant technical personnel will have a supervising roll in this operation with non-station personnel performing the inspection operations. This supervisory roll will take the personnel into all zone levels during ISI activities and this roll is expected to result in exposure from 1 to 2 rem/yr. Thus, the projected dose estimate for the 27 people in this group is 54 man-rem per year, the balance being accounted for in the non-station personnel.*

e. Group 5 - This group includes station supervisors such as health physics and chemistry supervisors, shift supervisors, etc. There are approximately 24 people in this group. Station personnel will supervise Group 1 and Group 2 personnel. Their dose is approximately the same as personnel in these groups. With a projected dose estimate of 1 rem per year per person with 24 people in the group, the total dose is 24 man-rem per year.

f. Group 6 - This group includes administrative and management personnel. There are approximately 31 people in this group. Personnel in this group spend their time in Zone I radiation areas. The projected dose estimates will be less than 500 mrem/yr. With 31 people in this group and a 500 mrem per man per year the total dose is 15.5 man-rem per year.

As seen from Table 12.4-1, the total estimated man-rem exposure is 715 man-rem. Groups 3, 5, and 6 are considered to be spread over all the functions. These groups constitute only 15% of the total exposure in any case.

12.4.3 INHALATION EXPOSURES

Airborne radionuclide concentrations in normally occupied areas are, as discussed in Section 12.2.2, well below the limits set by 10 CFR Part 20 and thus inhalation exposures are negligible. In areas where engineering controls or operational procedures do not reduce the airborne radionuclide concentrations sufficiently, additional measures such as access control, limiting exposure time (DAC hours), and respiratory protection devices are used to maintain the total effective dose equivalent (TEDE) ALARA.

12.4.4 SITE BOUNDARY DOSE

Steam handling equipment on the turbine operating floor can contribute to the site boundary dose in two ways: through a direct component and through an air-scattered "skyshine" component. Since the ^{16}N bearing equipment is known, it can be shielded to reduce the direct component. The "skyshine" component reaches the site boundary as a result of those gamma rays which are directed such that they bypass any intercepting shield walls and are scattered by the air to the site boundary.

The calculated results show that the skyshine dose will have its greatest effect on a dose point approximately 1950 m north of the turbine building. The skyshine dose at this point will be approximately 4 mrem/yr. This result is based on a plant capacity factor of 80%.

The main contributors to this dose and their contribution (in percent) are the south moisture-separator reheater (MSR) which contributes 60%, the north MSR which contributes 20%, the cross over lines which contribute 10%, and the turbines and feedwater heaters which contribute 10%.

The dose estimate was computed from a model that represents the ^{16}N gamma leakage by point isotopic sources. This model uses the output from the COHORT Code (Reference 12.4-3) which gives the airscattered dose as a function of distance and source ray angle.

The site boundary dose from liquid and gaseous effluents are discussed in Sections 11.2.3 and 11.3.3.

12.4.5 REFERENCES

12.4-1 *Atomic Industrial Forum, Compilation and Analysis of Data on Occupational Radiation Exposure Experienced at Operating Nuclear Power Plants, September 1974.*

12.4-2 *Ninth Annual Occupational Radiation Exposure Report, NRC, NUREG-0322, Washington, D.C., October 1977.*

12.4-3 *Tenth Annual Occupational Radiation Exposure Report, NRC, NUREG-0463, Washington, D.C., October 1978.*

12.4-4 *Occupational Radiation Exposure at Light Water Cooled Power Reactors, Annual Report 1977, NRC, NUREG-0482, Washington, D.C., April 1977.*

12.4-5 *Occupational Radiation Exposure at Commercial Nuclear Power Reactors, Annual Report 1979 and 1980, Volumes 1-2, NRC, NUREG-0713, December 1981.*

12.4-6 *NRC Seventh Annual Occupational Radiation Exposure Report 1974, NUREG-75/108, November 1975.*

12.4-7 *Atomic Industrial Forum, Compilation and Analysis of Data on Occupational Radiation Exposure Experienced at Operating Nuclear Power Plants, September 1974.*

Table 12.4-1

Summary of Occupational Dose Estimates

		Man-rem/yr
1.	*Routine operation and surveillance*	*53*
2.	*Nonroutine operation and surveillance*	*15*
3.	*Routine maintenance*	*288*
4.	*Waste processing*	*15*
5.	*Refueling*	*48*
6.	*Inservice inspection*	*153*
7.	*Special maintenance*	*145*
	Total	*717*

Table 12.4-2

Occupational Dose Estimates During Routine Operations and Surveillance

	Activity	Average Dose Rate (mrem/hr)	Exposure Time (hr)	Number of Workers	Frequency	Dose (man-rem/yr)
1.	Walking	0.5	0.5	2	1/shift	= 0.54
2a.	Checking					
	Railroad access	1	1	2	1/shift	= 2.2
	Change rooms	1	1	2	1/shift	
	Relay room	1	1	2	1/shift	
	Motor generator sets	1	1	2	1/shift	
	Battery room	1	1	2	1/shift	
	Computer room	1	1	2	1/shift	
	Switch gear room	1	1	2	1/shift	
	Air conditioning equip.	1	1	2	1/shift	
	Recirc. motor gen.	1	1	2	1/shift	
	RBCCW heat	1	1	2	1/shift	
	Exchangers	1	1	2	1/shift	
	Emergency air comp	1	1	2	1/shift	
	RBCCU pumps	1	1	2	1/shift	
	RBCCW expansion	1	1	2	1/shift	
	Tank	1	1	2	1/shift	
2b.	Mech. vac. pumps	10	0.5	2	1/shift	= 11
	CRD pumps	10	0.5	2	1/shift	
	CRD hydraulic	10	0.5	2	1/shift	
	Cont. units	10	0.5	2	1/shift	
	Refueling floor	10	0.5	2	1/shift	
	CRD filters	10	0.5	2	1/shift	
	RUCV demmo resin	10	0.5	2	1/shift	
	Tanks	10	0.5	2	1/shift	
	RNP pumps	10	0.5	2	1/shift	
	SRMP pumps	10	0.5	2	1/shift	
	Air coolers	10	0.5	2	1/shift	
	IVST racks	10	0.5	2	1/shift	
2c.	CRD storage and repair	15	0.2	2	1/shift	= 3.3
	SGTS	15	0.2	2	1/shift	
	HPCI turbine and pump	15	0.2	2	1/shift	
2d.	RWCU heat exchangers	50	0.1	1	1/shift	= 5.5
	RHR heat exchangers	50	0.1	1	1/shift	
	Acid purple and turbine	50	0.1	1	1/shift	

Table 12.4-2

Occupational Dose Estimates During Routine Operations and Surveillance (Continued)

	Activity	Average Dose Rate (mrem/hr)	Exposure Time (hr)	Number of Workers	Frequency	Dose (man-rem/yr)
	Checking (continued)					
2e	Demin precoat tank	0.2	0.5	1	1/shift	= 0.1
	Precoat pump	0.2	0.5	1	1/shift	
	Waste sample pump	0.2	0.5	1	1/shift	
	Floor drain sample room	0.2	0.5	1	1/shift	
	Waste surge pump	0.2	0.5	1	1/shift	
	Equip. drain sump pump	0.2	0.5	1	1/shift	
	Waste surge pump	0.2	0.5	1	1/shift	
	Waste precoat pump	0.2	0.5	1	1/shift	
	Waste sludge disch. pump	0.2	0.5	1	1/shift	
	Waste filter aid pump	0.2	0.5	1	1/shift	
	Chemical waste pump	0.2	0.5	1	1/shift	
	Floor drain coll. pump	0.2	0.5	1	1/shift	
2f.	Chemical waste tank	50	0.5	1	1/shift	= 1.3
	Spent resin pump	50	0.5	1	1/shift	
	Cond. phase decant pump	50	0.5	1	1/shift	
	Cond. phase sludge	50	0.5	1	1/shift	
	Discharge mixing pump	50	0.5	1	1/shift	
2g.	Floor drain demin.	8	2	1	1/shift	= 0.8
	Waste hopper	8	2	1	1/shift	
	Floor drain filter	8	2	1	1/shift	
2h.	Turbine inst. and controls	0.5	1	2	1/shift	= 1.1
	Gen. CO_2 units	0.5	1	2	1/shift	
	Station air comp.	0.5	1	2	1/shift	
	Heater feed pumps	0.5	1	2	1/shift	
	Demin. pumps and valves	0.5	1	2	1/shift	
	MTG lubrication system	0.5	1	2	1/shift	
	Hatch area above demin. tanks	0.5	1	2	1/shift	
	H_2 seal 2.1 equip.	0.5	1	2	1/shift	
	Health shell pull space	0.5	1	2	1/shift	
	BCCW heat expansion and pumps	0.5	1	2	1/shift	

Table 12.4-2

Occupational Dose Estimates During Routine Operations and Surveillance (Continued)

	Activity	*Average Dose Rate (mrem/hr)*	*Exposure Time (hr)*	*Number of Workers*	*Frequency*	*Dose (man-rem/yr)*
	Checking (continued)					
2i	*TBCCW expansion tank*	*5*	*0.3*	*1*	*1/shift*	*= 1.6*
	Ventilation equipment	*5*	*0.3*	*1*	*1/shift*	
	Demin. precoat and resin tanks	*5*	*0.3*	*1*	*1/shift*	
	Demin. precoat pumps	*5*	*0.3*	*1*	*1/shift*	
	Sump pumps	*5*	*0.3*	*1*	*1/shift*	
	Reactor feed pump turbine	*5*	*0.3*	*1*	*1/shift*	
	Lub. system	*5*	*0.3*	*1*	*1/shift*	
	MTG lub oil cooler	*5*	*0.3*	*1*	*1/shift*	
	Main gen. and exciter	*5*	*0.3*	*1*	*1/shift*	
	MTG utilizer activators	*5*	*0.3*	*1*	*1/shift*	
	Stop and throttle valves	*5*	*0.3*	*1*	*1/shift*	
	Circ. water isol. valves	*5*	*0.3*	*1*	*1/shift*	
2j.	*Heater drain pumps*	*50*	*0.2*	*1*	*1/shift*	*= 11.0*
	Heater drain flash tanks	*50*	*0.2*	*1*	*1/shift*	
	Condense water box	*50*	*0.2*	*1*	*1/shift*	
	Reactor feed pumps and turbines	*50*	*0.2*	*1*	*1/shift*	
2k.	*Drain coolers*	*15*	*0.5*	*1*	*1/shift*	*= 14.6*
	Feed water heaters	*15*	*0.5*	*1*	*1/shift*	
	Reheater seal tank	*15*	*0.5*	*1*	*1/shift*	
	Gland steam condenser	*15*	*0.5*	*1*	*1/shift*	
	Main turbine	*15*	*0.5*	*1*	*1/shift*	
	Reheater separators	*15*	*0.5*	*1*	*1/shift*	
					Total	*53.04*

Table 12.4-3

Occupational Dose Estimates During Nonroutine Operations and Surveillance

	Activity	*Average Dose Rate (mrem/hr)*	*Exposure Time (hr)*	*Number of Workers*	*Frequency*	*Dose (man-rem/yr)*
1.	*Operation of equipment:*					
1a.	*Traversing in-core probe system*	*2*	*2*	*2*	*3/yr*	*0.02*
1b.	*Safety injection system*	*5*	*1*	*1*	*1/month*	*0.06*
1c.	*Feedwater pumps and turbine*	*1*	*1*	*1*	*1/week*	*0.05*
1d.	*Instrument calibration*	*2*	*1*	*1*	*1/day*	*0.73*
2.	*Collection of radioactive samples:*					
2a.	*Liquid system*	*10*	*0.5*	*1*	*1/day*	*1.83*
2b.	*Gas system*	*5*	*0.5*	*1*	*1/month*	*0.03*
2c.	*Solid system*	*10*	*0.5*	*1*	*4/yr*	*0.01*
2d.	*Radiochemistry*	*1*	*1*	*2*	*1/day*	*0.73*
2e.	*Radwaste operation*	*3*	*8*	*3*	*1/week*	*3.75*
2f.	*Health physics*	*5*	*2*	*2*	*1/day*	*7.30*
					Total	*14.50*

Table 12.4-4

Occupational Dose Estimates During Routine Operations and Surveillance

	Activity	Average Dose Rate (mrem/hr)	Exposure Time (hr)	Number of Workers	Frequency	Dose (man-rem/yr)
1.	Minor repairs reactor building	1	20	2	1/week	2.1
2.	Ventilation and air conditioning	0.5	20	1	1/week	0.5
3.	Control rod drive repair	15	200	6	1/yr	18
4.	Reactor water cleanup pump	180	35	3	1/yr	19
5.	Reactor water cleanup valve and heat exchanger	110	45	6	1/yr	30
6.	Residual heat removal system	200	27	8	1/yr	43
7.	Safety relief valves	80	30	5	1/yr	12
8.	Main steam isol. valves	75	100	6	1/yr	45
9.	Recirc. pumps	200	50	3	1/yr	30
10.	Snubber inspector and repair	75	100	5	1/yr	37.5
11.	Misc. turbine bldg. repairs	2	8	1	1/day	5.8
12.	Reactor feed pumps and turbine	10	40	2	2/yr	0.8
13.	Drain coolers	2	40	2	1/yr	0.16
14.	Steam jet air ejectors	10	40	2	2/yr	1.6
15.	Offgas system	2	40	2	6/yr	0.96
16.	MTG actuator	5	40	1	1/yr	0.24
17.	Heater drain flash tanks	2	40	1	1/yr	0.08
18.	Condenser water box	5	20	1	1/yr	0.1
19.	Annual turbine inspection	3	120	10	1/yr	3.6
20.	Misc. radwaste pump repairs	25	40	2	4/yr	8.0
21.	Misc. radwaste valve repairs	10	40	2	6/yr	4.0
22.	Filter and demin.	65	30	3	1/yr	5.9
23.	Centrifuge	50	8	2	4/yr	3.2
24.	Evaporation	85	50	3	1/yr	12.8
25.	Turbine instr. and control	2	10	1	1/week	1.0
26.	Waste solidification	2	40	2	2/yr	0.32
27.	Area monitors	20	40	2	2/yr	0.32
28.	Operate laundry facility	0.5	40	3	1/day	2.2
					Total	288.2

Table 12.4-5

Occupational Dose Estimates During Waste Processing

Activity	*Average Dose Rate (mrem/hr)*	*Exposure Time (hr)*	*Number of Workers*	*Frequency*	*Dose (man-rem/yr)*
Radwaste control room	*.5*	*8*	*1*	*1/shift*	*4.4*
Sampling and filter changing	*15*	*8*	*1*	*1/week*	*6.2*
Panel operator insp. and testing	*1*	*2*	*1*	*1/day*	*0.73*
Operation of waste and packaging equipment	*2*	*16*	*2*	*1/week*	*3.3*
				Total	*14.6*

Table 12.4-6

Occupational Dose Estimates During Refueling

	Activity	*Aveg. Dose Rate (mrem/hr)*	*Exposure Time (hr)*	*Number of Workers*	*Frequency*	*Dose (man-rem/yr)*
1.	*Opening/closing reactor pressure vessel*	*60*	*40*	*10*	*1/yr*	*24*
2.	*Fuel preparation*	*10*	*24*	*2*	*1/yr*	*0.48*
3.	*Refueling*	*10*	*100*	*15*	*1/yr*	*15*
4.	*Fuel handling*	*2.5*	*100*	*4*	*1/yr*	*1.0*
5.	*Fuel sipping*	*10*	*120*	*6*	*1/yr*	*7.2*
					Total	*47.7*

Table 12.4-7

Occupational Dose Estimates During Inservice Inspection

	Activity	*Average Dose Rate (mrem/hr)*	*Exposure Time (hr)*	*Number of Workers*	*Frequency*	*Dose (man-rem/yr)*
1.	*Removal/replacement of insulation*	*150*	*80*	*4*	*1/yr*	*48*
2.	*Installation/removal and ladders*	*50*	*40*	*4*	*1/yr*	*8*
3.	*Inspecting inside drywell*	*150*	*80*	*6*	*1/yr*	*72*
4.	*Recorder data*	*50*	*80*	*6*	*1/yr*	*24*
5.	*Inspecting outside drywell*	*5*	*50*	*2*	*1/yr*	*0.5*
					Total	*153*

Table 12.4-8

Occupational Dose Estimates During Special Maintenance

Activity	*Average Dose Rate (mrem/hr)*	*Exposure Time (hr)*	*Number of Workers*	*Frequency*	*Dose (man-rem/yr)*
Sparger replacement	*800*	*60*	*5*	*Should not be necessary*	---
CRD replacement	*260*	*35*	*5*	*1/yr*	*45.5*
Turbine overhaul	*5*	*250*	*20*	*1/5 yr*	*5*
Servicing in-core detectors	*15*	*50*	*3*	*1/yr*	*2.3*
Offgas charcoal sys. overhaul	*20*	*100*	*2*	*1/20 yr*	*0.2*
Special maintenance reactor water clearup sys.	*150*	*100*	*8*	*1/10 yr*	*12*
Misc. piping repairs	*80*	*100*	*10*	*1/yr*	*80*
				Total	*145.0*

Table 12.4-9

Summary of Annual Information Reported by Commercial Boiling Water Reactors

1969 - 1980

Year	Number of Reactors Included	Annual Collective Doses (man-rems)	No. of Workers With Measurable Dose	Gross MW-Yrs Electric Generated	Average Dose Per Worker (rems)	Average Collective Dose Per Reactor (man-rems)	Average No. Personnel With Measurable Doses Per Reactor	Average Man-rems Per MW-yr	Average MW-yrs Generated Per Reactor	Average Rated Capacity (MWe) Net
1969	3 (2)	586 (300)	290[a]	192	1.03[a]	195	145[a]	3.1	64	112
1970	6 (4)	764 (510)	1,321[a]	912	0.39[a]	127	330[a]	0.8	152	267
1971	7 (5)	1,784 (1,069)	1,873[a]	1,038	0.57[a]	255	375[a]	1.4	187	339
1972	10 (7)	2,858 (2,130)	2,258[a]	3,058	0.94[a]	286	323[a]	0.9	306	434
1973	12	4,564	5,340	3,394	0.85	380	445	1.3	283	459
1974	14	7,095	8,769	4,059	0.81	507	626	1.7	290	513
1975	18	12,611	14,607	5,789	0.86	701	812	2.2	321	611
1976	23	12,626	17,859	8,586	0.71	549	776	1.5	373	647
1977	23	19,042	21,388	9,098	0.89	828	930	2.1	396	645
1978	25	15,096	20,278	11,774	0.74	604	811	1.3	471	669
1979	25	18,322	25,245	11,671	0.73	733	1,010	1.6	467	669
1980	26	29,530	34,094	10,868	0.87	1,136	1,311	2.7	418	664

[a]During the years 1969 through 1972, all plants reported collective doses but a few did not submit the number of personnel that received measurable doses. The number of reactors that did report doses and number of workers is given in parentheses in the second column. The collective doses shown in parentheses in the third column, as well as the noted numbers in the remaining columns, are all based on the data submitted by the number of reactors shown in parentheses. This correction, and others, changed some of the values from those appearing in earlier NUREG documents.

12.5 RADIATION PROTECTION PROGRAM

12.5.1 ORGANIZATION

Radiation Protection, under the direction of the Chemistry/Radiological Services Director, implements the Radiation Protection Program (RPP).

Health Physics (HP) is audited for compliance to regulations and to ensure that occupational and public radiation exposures are as low as is reasonably achievable (ALARA). Regulatory Guide 1.8 and ANSI 18.1-1971 have been followed in the selection of HP personnel. Energy Northwest pre-employment practices include screening to determine that plant employees are trustworthy, fit, and qualified to perform their duties safely. The experience and qualifications of the personnel responsible for the RPP and for handling and monitoring radioactive materials including special nuclear source and byproduct materials, are described in Sections 12.5 and 13.1. Also, Section 13.1 describes the minimum qualification requirements for specific plant personnel, using the criteria outlined in Regulatory Guide 1.8 and ANSI 18.1-1971.

The Plant General Manager reports to the Vice President, Operations and has the overall responsibility for the RPP. The Plant General Manager is responsible for ensuring that personnel, facilities, and other resources required to implement the RPP are available. This includes ensuring that the authority to implement an effective RPP is delegated through the management structure, ensuring the program receives the active support of all Energy Northwest personnel, and ensuring production goals, maintenance activities, and work schedules do not adversely affect the ability to provide proper radiological controls. In turn, all plant personnel share the responsibility for ensuring personal radiological safety and are required to follow the rules and procedures established for radiological safety. Specific responsibilities regarding ALARA are described in Section 12.1.

The Operations Director reports to the Plant General Manager and has the responsibility for ensuring the independence of the RPP from plant operational pressures. The Operations Director provides the Chemistry/Radiological Services Director the support necessary for the effective implementation of the RPP.

The Chemistry/Radiological Services Director (RSD) is responsible for the implementation of the RPP. This position meets the requirements of the Radiation Protection Manager (RPM). The RSD has direct access to the Plant General Manager in all matters relating to radiation safety. The RSD meets the qualifications defined in Regulatory Guide 1.8, and provides the experience and expertise necessary to implement the RPP. RPM responsibilities may be assigned to any Radiation Protection management or supervisory position described in this Chapter provided they meet the requirements of Regulatory Guide 1.8.

The Chemistry/Radiological Services Director supports the safe, reliable, and economic operations of the plant within applicable laws, standards, codes, regulations, and Energy Northwest policies.

The Radiological Support Supervisor reports to the Assistant Chem/RP Manager and directs the activities and monitors the performance of the Radiological Planning Group and the Radiological Support Group. The Radiological Planning Group is responsible for performing ALARA reviews and evaluations to support HP Operations. The Radiological Support Group provides technical support for all aspects of the RPP.

The Radiological Operations Supervisor reports to the Chemistry/Radiological Services Director and directs the activities and monitors the performance of the Health Physics Craft Supervisors and Rad Material Control/Rad Waste Supervisor.

The Health Physics Craft Supervisors report to the Radiological Operations Supervisor and direct the activities and monitor the performance of HP Technicians. Health Physics Craft Supervisors are responsible for ensuring conditions that have the potential for causing exposure to radiation are identified, posted, and controlled.

The Rad-Material Control and Rad-Waste Supervisor reports to the Radiological Operations Supervisor and is responsible for providing immediate supervision, leadership and technical support to the laborers in the areas of equipment and area decontamination, radioactive material control and inventory and anti-contamination laundry; process, package and transport of radioactive waste material, including mixed waste.

Each individual who has unescorted access to Columbia Generating Station restricted areas is responsible for ensuring personnel radiation safety. This includes strict compliance with radiation protection requirements, procedures, and good radiological work practices. In addition, individuals with escort duties are responsible for the radiological safety of visitors.

12.5.2 EQUIPMENT, INSTRUMENTATION, AND FACILITIES

This section describes the equipment, instrumentation, and facilities available for implementation of the RPP and the criteria used for selection of the instrumentation and equipment. The guidance provided by Regulatory Guides 8.4 and 8.28 has generally been followed with exceptions noted as follows:

a. Regulatory Guide 8.4 Rev. 1, "Personnel Monitoring Device – Direct-Reading Pocket Dosimeters," is implemented for the selection, calibration, and performance testing of direct-reading pocket dosimeters. Continued use of the direct-reading dosimeters will be based on their ability to meet initial calibration and periodic response check criteria as specified in the Regulatory Guide and as described in approved Health Physics Instructions. Vendor literature will be accepted as documentation that performance standards and the ability to perform

acceptably under test conditions for temperature and humidity specified in Regulatory Guide 8.4 are met.

b. The majority of direct-reading dosimeters at Columbia Generating Station are electronic dosimeters with audible-alarm capabilities. A program for their appropriate use requires that conditions under which they may not perform adequately be discussed, as well as describing performance specifications which are met.

Electronic dosimeters will not be used to circumvent the initial meter survey required prior to work in an area. Radiation Protection will assign electronic dosimeters only when the working environment is suitable for their use. Individuals required to wear an electronic dosimeter will be provided appropriate instructions either in training or at the time of issue to minimize the risk of improper use. Regulatory Guide 8.28 endorses, with one exception, the performance specifications indicated in ANSI N 13.27 "Performance Specifications for Pocket - Sized Alarming Dosimeters/Ratemeters."

Since credit is taken for the audible-alarm capabilities of the electronic dosimeter, the Energy Northwest program for use of audible-alarm dosimeters complies with Regulatory Guide 8.28 with the following exceptions:

1. Requirement: Section C.2.c of the Regulatory Guide requires a source check of audible-alarm dosimeters each day before use.

   Energy Northwest position: Electronic dosimeters equipped with an automatic electronic test to ensure detector function are not subject to the requirement for a source check each day before use.

2. Requirement: Section C.2.b(1) of the Regulatory Guide specifies that alarm dosimeters should not be used when the alarm may not be heard, such as (a) in a high noise environment, (b) when the user has a pronounced hearing loss, (c) when the user is wearing mufflers over the ears, or (d) when the sound from the dosimeter would be muffled by heavy clothing worn over the dosimeter.

   Energy Northwest position: Electronic dosimeters will be allowed for use when their alarm may not be heard except when they are used to fulfill the alarming dosimeter function described in Technical Specification 5.7. When used in accordance with the Technical Specification, alternative methods of warning are required when the audible alarm may not be heard. Alternative methods include, but are not limited to the following: (1) vibrator, (2) ear phone, (3) flashing light clearly visible to the worker.

The program outlines the performance requirements for electronic dosimeters and details the exception to the ANSI N13.27 criteria, while ensuring that reliable electronic dosimetry is used to facilitate exposure control and the ALARA concept.

12.5.2.1 Criteria for Selection

a. Radiation and contamination survey instrumentation: This equipment was selected to cover the wide range requirements extending from picocurie quantity measurements in the laboratory to the thousand R/hour ranges necessary for emergency dose rate determinations. The laboratory instrumentation was chosen to provide capability for the quantitative and qualitative analyses required to identify and measure the radionuclides encountered in a power reactor. The portable instrumentation includes low level detection capabilities for alpha, beta, and gamma contamination and wide ranges of dose rate measuring instruments for beta, gamma, and neutron radiation. The criteria for quantity selection were to provide adequate available counting time for anticipated demand in the laboratory and sufficient portable instruments to cover normal operational and emergency requirements in all areas of the Columbia Generating Station facility;

b. Airborne radioactivity monitoring: The basic criteria for selection of this equipment were to provide a means for determining radioactive airborne effluents released from the plant, and to effectively monitor airborne radioactivity levels within the plant environs. Provisions have been made for continuing response monitoring of noble gases discharged from gaseous release points from the reactor, radwaste, and turbine building, and for continuous sampling of radioiodines and particulates at these same locations. Internal plant air monitoring instrumentation is used within these buildings with readout locally and in the control room;

c. Area radiation monitoring: This system was designed to provide continuous surveillance of radiation levels throughout the plant with local alarm at predetermined levels, local indication, and control room annunciation and recording. Functions of the system include warning of excessive gamma radiation levels in fuel storage and handling areas, detection of unauthorized or inadvertent movement of radioactive materials in the plant, local alarms to warn personnel in an area of a substantial increase in radiation levels, provision for supervisory information in the control room so that correct decisions may be made in the event of a radiation incident, backup to other systems for detection of abnormal migrations of radioactive materials in or from the process streams, and providing a permanent record of gamma radiation levels at selected locations within the various plant buildings; and

d. Personnel monitoring: Personnel dosimetry devices were chosen to provide a record of exposure received by occupationally exposed individuals at the site who are likely to receive, under normal or accidental conditions, exposures greater than 10% of applicable 10 CFR 20 limits.

Personnel dosimeter badges (DLRs) containing an OSL dosimeter or other acceptable dosimetry provide the primary legal record of exposure received by personnel. Each person requiring monitoring for record is assigned a badge, which is recorded with the wearer's identification. Results from the badge and the period of exposure are recorded on a document kept as a legal Energy Northwest record. Badges used will be capable of recording exposure over a range of at least 40 mrem to greater than 1000 rem.

Persons being monitored may be required to wear other dosimetry assigned by the Radiation Protection staff, such as direct reading dosimeters, integrating dose meters, extremity badges, and finger rings.

12.5.2.2 Facilities

Radiation Protection facilities at Columbia Generating Station include the following:

a. Personnel decontamination showers and sinks are located in the radwaste building (487 ft level). Temporary change areas are set up as necessary in areas of the plant to localize and prevent the spread of contamination while performing maintenance activities. Small inventories of protective clothing are stored in the emergency relocation centers, operation and radwaste control rooms, and strategic locations throughout the plant;

b. Monitoring equipment for personnel [e.g., friskers and installed personnel monitors (IPMs)] and tools/personal items [friskers and small article monitors (SAMs)] are provided at the radiological access control areas and various areas within the plant to survey for radioactive contamination;

c. Facilities for personnel exposure monitoring and protection, which include:

1. Internal dosimetry,
2. Respiratory protection testing;

d. Medical first aid facilities are equipped to provide care for injuries, including those with radioactive contamination involved; and

e. Facilities for equipment and tool decontamination exist in the radwaste, turbine, and reactor buildings. The locations and facilities are

1. Radwaste building

The general decontamination area is shown in Figure 12.3-12, approximate column location Q.4-13.6 at the 467 ft 0 in. level. Facilities include curbing, sink, monorail hoist, and drains. At the 487 ft 0 in. level, Figure 12.3-13, column coordinates R.2-14.0, tools and small equipment can be decontaminated in the hot machine shop. Facilities in the hot machine shop include a bench space and drains. Also, there is a personnel (male/female) decontamination station at the 487 ft 0 in. level, column coordinates K.1-15.9. This facility contains sinks, showers, and a decontamination kit.

2. Turbine building

Figure 12.3-5, columns H-9.5, el. 441 ft 0 in. identifies the turbine building decontamination area. Facilities include a monorail, curb, sink, shower, and drains.

3. Reactor building

The head washdown area is shown in Figure 12.3-18 at column coordinates N-5.8 at the 606 ft 10 in. level and contains a curb and drain.

The CRD room area, Figure 12.3-16, columns M-3.4, 501 ft 0 in. elevation contains a sink, monorail, bench, and storage vault.

4. The office of the RPM is located in the service building. Health Physics Craft Supervisors and HP Technicians are located in locations to provide for ready access by other plant workers and an area to generate and process records.

5. A hot machine shop and a hot instrument shop are provided in the radwaste building for work on contaminated equipment under controlled conditions. A HEPA-filtered vacuum system is installed in the hot machine shop to control airborne radioactivity while working on radioactive equipment. Portable HEPA-filtered vacuum systems are also available.

6. A laboratory complex is provided in the radwaste building consisting of a sample room, hot radiochemistry laboratory, and a counting room where radioactive samples will be qualitatively and/or quantitatively analyzed.

f. A protective clothing storage and distribution facility inside the protected area fence, but outside the power block.

Radiation Protection facilities at the Plant Support Facility/Emergency Operations Facility:

The Energy Northwest Plant Support Facility (PSF) is located 0.75 mile southwest of Columbia Generating Station. It is designed and equipped to provide emergency capabilities in support of Columbia Generating Station and for support of Columbia Generating Station during normal plant operations and maintenance. Support facilities important to HP include:

a. Portable radiation monitoring equipment calibration,
b. Radiological training.

The instrument calibration laboratory is located in the extreme northwest corner of the lower level. It contains an irradiation cubicle that is shielded on all sides and above by 2 ft of concrete. The cubicle entrance is protected by a labyrinth and a lockable gate. Larger open sources are stored and used in the cubicle. The shielded cubicle together with administrative controls such as procedures, radiation work permits, and surveys ensure that calibration laboratory operation will not result in radiation areas in surrounding spaces.

Calibrations are performed in accordance with approved procedures and are traceable, either directly or indirectly, to the National Institute of Standards and Technology (NIST). Available sources are listed in Table 12.2-12a.

12.5.2.3 Equipment

Radiation Protection equipment, other than instrumentation, is described in the following:

a. Protective clothing and accessories are provided for personnel required to work in contaminated areas. Clothing requirements for a particular task or area are prescribed by Radiation Protection based on the actual or potential conditions. Available clothing includes, but is not limited to:

1. Coveralls and laboratory coats,
2. Gloves - rubber and/or cotton,
3. Head covers,
4. Foot protection, and
5. Plastic suits - with or without supplied air.

b. Respiratory protection equipment is provided for personnel when it is not practicable to apply process controls or other engineering controls to control airborne radioactive contamination. The decision to use respiratory protection equipment is based on maintaining the TEDE ALARA. The respiratory protection program is conducted per the requirements of 10 CFR 20.1701, 1702, 1703, and 1704. Exposure is limited to derived air concentrations (DAC) and annual limit on intake (ALI) values specified in Appendix B, Table 1 of 10 CFR 20. Allowance is made for use of respiratory protective equipment, as prescribed in 20.1703, in limiting an individual's intake of airborne radioactive materials. Among the types of equipment used are:

1. Full face air purifying respirators,
2. Airline supplied full face masks (pressure demand regulated), and
3. Self contained breathing apparatus (pressure demand regulated).

c. Air sampling equipment, in addition to the continuous air monitors, includes high and low volume portable air samplers, low volume constant air samplers, and air samplers with a self-contained power source. Collection media (filters) employed are capable of collecting particulate and radioiodine samples; and

d. Emergency equipment and supplies are maintained in lockers at strategic locations within the plant. These lockers are to be used for a rapid initial response and are not intended to provide the resources for a long term recovery operation. Equipment is stored for field team use at the EOF. Four-wheel drive vehicles, automobiles, and survey kits are available for use by the field team. Locations and types of emergency equipment are listed in the Emergency Plan.

Other than emergency supplies, the primary storage areas for radiation protection equipment are the two Radiation Protection control areas located in the service and radwaste buildings. Temporary storage facilities are set up in localized areas as required.

12.5.2.4 Instrumentation

Typical plant portable radiological instrumentation is described in Table 12.5-1. Instrumentation used for quantitative measurements for determining the quantity of radiation or radioactivity that may be present is calibrated at least annually when in use. Instruments that are less stable over time or those subjected to extreme operation conditions, hard usage, or multishift use should be calibrated on a more frequent interval. Electronic calibrations of instrument components are performed using test equipment traceable to the NIST. Overall calibration of radiation measuring instruments is performed using radioactive standards traceable to a recognized source in a known, reproducible geometry. Calibration of low level radiation detection instruments is done with a pulse generator.

12.5.3 PROCEDURES

Section 12.1.3 described a process that was incorporated into the preparation and revision of plant procedures which provide a positive method of ensuring Radiation Protection input and ALARA consideration into radiation exposure related activities. The intent of this process is to incorporate the general guidance of appropriate regulatory guides plus the previous experience of power reactor radiation protection work into all applicable plant procedures.

12.5.3.1 Personnel Control Procedures

The Plant Procedures Manual contains the administrative procedures for control of access to radiation areas, high radiation areas, and very high radiation areas. This includes control of time spent within these areas by all plant workers. Basically, the procedures limit entry to these areas to time required for necessary operational maintenance and surveillance activities only. The primary tool used to ensure control and to maintain TEDE ALARA at Columbia

Generating Station is the Radiation Work Permit (RWP). All work performed at Columbia Generating Station in radiologically controlled areas is performed in accordance with an RWP, with the exception of specific activities identified in the implementing plant RWP procedure. The RWP provides current data on radiation levels within the area of interest, any restrictions on allowable work time, protective clothing and respiratory protective requirements, information on special tools or equipment needed, special radiation safety and personnel monitoring requirements, and any other special instructions or radiological hold points necessary. A section of the RWP is used to incorporate the criteria given in Regulatory Guides 8.2, 8.8, and 8.10 into each individual task, even though it has already been included in job procedures through the system for ALARA consideration described in Section 12.1.3. All RWPs require approval from Radiation Protection supervision prior to starting work. In addition, all personnel who perform activities covered by the RWP are required to read, understand, and document their understanding as specified by implementing plant procedures. There are two types of RWPs:

a. Specific RWP is issued for the performance of a particular task or function which falls outside the limitations imposed for General RWPs, and

b. General RWP may be issued to cover repetitive (routine) functions in areas where radiological conditions are known and stable.

In addition to the administrative controls used at Columbia Generating Station, certain physical controls are established which restrict entry to radiation areas, high radiation areas, and very high radiation areas. Radiation areas are posted as required by 10 CFR 20, and high radiation areas and very high radiation areas are locked or otherwise controlled as specified by this same regulation and Technical Specifications.

The plant security control system complements both the administrative and physical entry restraints by allowing access only to personnel with authorization to be in specific plant areas.

12.5.3.2 As Low As Is Reasonably Achievable Procedures

The procedures and processes described below are in addition to those described in Sections 12.1.3 and 12.5.3.1.

They have been developed to ensure that occupational radiation exposures are maintained ALARA. A primary goal of the Columbia Generating Station RPP is the control and reduction of individual and collective radiation exposures. This goal is achieved through training and comprehensive job planning and reviews as follows:

a. Training - ALARA training is required by plant procedures to be included in all applicable radiation training courses. The training applies to individuals whose duties require working with radioactive materials, entering radiation areas,

directing the work of others in radiologically controlled areas, or planning work and preparing procedures for work in radiologically controlled areas. ALARA training is commensurate with the individual's duties, responsibilities, and radiation exposure potential. Workers who may enter restricted areas are given specific instructions about prenatal exposure risks to the developing embryo and fetus. This instruction includes the information provided by Regulatory Guide 8.13;

b. Job Planning and Reviews - Plant procedures specify that each job, involving exposure to radiation and/or radioactive materials, receives job planning and/or an ALARA review. The extent of the review is determined by an evaluation of the radiological risks involved. The preliminary job planning and review identifies the need for pre-job briefings and/or job planning meetings to coordinate work efforts and to familiarize personnel with the work and exposure reduction techniques. Pre-job planning may include the following:

1. Job history reviews,
2. Determination of radiological conditions,
3. Determination of exposure estimate, and
4. Interface with planners, schedulers, job supervisor, ALARA.

Additional ALARA reviews are performed by the Senior Site ALARA Committee. The Senior Site ALARA Committee has been developed to ensure participation by a range of plant personnel and provide for an appropriate level of management involvement and direction in ALARA issues. The Senior Site ALARA Committee serves as a review and advisory organization to the Plant General Manager on occupational radiation exposure to personnel.

Plant procedures provide requirements for committee membership, responsibilities, authority, and records of meetings and actions. The Senior Site ALARA Committee is responsible for the review of plant and departmental exposure goals and reviewing and assessing the effectiveness of the radiation exposure control program and the ALARA Program. The Senior Site ALARA Committee may create Working Groups to provide dose reduction methods for tasks which have a significant potential for dose reduction.

As part of pre-job review, ALARA job planning meetings are conducted when significant exposure savings or increased contamination control may result. The planning meetings may include the job supervisor, job planner, Radiation Protection supervision, HP technicians, and key workers. These meetings are used to ensure worker familiarity with procedures, work locations, RWP requirements, unusual hazards, and job-specific ALARA techniques to be employed. The use of mock-ups or dry runs may result from these meetings.

In addition to pre-job ALARA reviews, plant procedures have provisions for work-in-progress ALARA reviews and post-job ALARA reviews. These reviews are coordinated by Radiation Protection and may include discussions with individuals who performed the work, HP technicians, engineers, job supervisors, designers, or others as appropriate;

c. Remote handling tools and/or equipment - use of special tools/equipment for remote handling of radioactive equipment is factored into each applicable work activity; and

d. Exposure records are maintained in a manner that will allow Radiation Protection to tabulate and correlate exposure results to identify problem areas with individuals or activities.

Plant procedures are evaluated to determine the need for an ALARA review. An ALARA review is required for new procedures in which the actions take place in a radiologically controlled area or involve handling radioactive material.

An ALARA review is required for procedure revisions which:

a. Cause entry into a radiation area, high radiation area, or very high radiation area,
b. Cause opening a contaminated or potentially contaminated system,
c. Significantly increase dose rates, or
d. Significantly increase exposure received.

Radiation Protection requirements, prerequisites, precautions, and ALARA considerations are incorporated into these procedures during the procedure review and approval process. In addition, an RWP is issued for those activities having radiological implications. Special activities such as inservice inspection (ISI), outage, and refueling are reviewed by the Senior Site ALARA Committee and Radiation Protection as appropriate. Special precautions, prerequisites, or requirements may be incorporated into the plant procedures based on these reviews.

12.5.3.3 Radiological Survey Procedures

A radiological survey is defined as an evaluation of radiological conditions and potential hazards. When appropriate, such an evaluation includes a physical survey (e.g., direct radiation and/or contamination surveys).

Routine surveys are conducted in various areas throughout the site to identify, monitor, and control sources of radiation and contamination. Routine surveys are performed on a frequency

based on a consideration of potential radiological hazards, personnel occupancy and radiological stability. Included in routine surveys are the following daily checks:

- Check the plant area radiation monitoring system, and
- Check inservice portal, air and other continuously operating radiation/contamination monitors.

Abnormal changes in background and abrupt unexplained increases are investigated.

Nonroutine surveys are performed as the need and conditions dictate. The frequency and extent of these surveys should be determined based on historical data, on the conditions and activities taking place in the area, and on ALARA considerations.

Surveys of normally inaccessible, unoccupied areas are performed after each shutdown or prior to entry into these areas. Postings and survey record sheets are updated as conditions dictate.

Instructions relating to radiation surveys are provided in the Energy Northwest Radiation Protection Procedures.

12.5.3.4 Procedures for Radioactive Contamination Control

This section describes the bases and methods used for the monitoring and control of radioactive contamination on personnel, material, and surfaces.

a. Bases: The methods used for the monitoring and control of Columbia Generating Station licensed radioactive material are based on 10 CFR 20.1101(b), 20.1501, NRC Circular 81-07, and industry-accepted practices. Tools, equipment, and other items with detected quantities of licensed radioactive materials will not be unconditionally released. Detection levels will be based on the ALARA principle.

b. Methods: Personnel and materials will be surveyed in accordance with 10 CFR 20.1501. When physical surveys are performed, they will be conducted using industry-accepted, calibrated, detection instruments and with techniques that are appropriate to the level of risk. Other sections of Chapter 12 cover the selection criteria for contamination survey instruments, contamination monitoring facilities, protective clothing, contamination and radiation controls established through the RWP program, contamination monitoring surveys, ALARA with respect to contamination, and control of airborne radioactive material.

Instructions for monitoring and control of contamination are maintained in the Radiation Protection Procedures.

12.5.3.5 Procedures for Control of Airborne Radioactivity

Evaluation of airborne radioactivity concentrations is done procedurally by several methods. Routine airborne surveys consist of observing the continuous air monitors located in various areas of the plant and also the effluent monitors. These observations are supplemented by grab samples taken on a routine basis and by laboratory analysis of selected particulate and charcoal filters used on the continuous monitors. Special airborne surveys are made with portable samplers when a continuous air monitor indicates increases in airborne radioactivity or to evaluate conditions in a specific area or on a specific job.

The portable air sampling equipment consists of both high and low volume collectors with appropriate media for collecting particulates and radioiodines. These samplers are used for both spot evaluations by collection of grab samples and longer term evaluations by use of low volume samplers to collect over the period of a specific job or activity. Laboratory analysis is made of air samples for gross radioactivity and, where warranted, for specific isotope identification and quantification to determine and record airborne concentrations.

Selected numbers of the routine air samples collected are analyzed for specific isotope content to ensure that the DAC levels are not being approached. Special samples are taken for this purpose whenever unexplained increases occur on continuous air monitors or when gross activity levels indicate there is a potential for exceeding the value specified in 10 CFR 20, Appendix B, Table 1, Column 3 of any isotope present in the mixture.

Airborne radioactive iodine monitoring includes integrated sample collection and laboratory analysis plus portable sampling and analysis. Portable and stationary sampling encompasses iodine collection on charcoal and/or silver zeolite cartridges of nominal dimension of 2-in. disc diameter by 1-in. thickness at calibrated flow rates. Duration of sampling is determined by the anticipated ambient concentration levels whereas a nominal sampling period in excess of 5 minutes is selected to minimize sampling errors. Where gross noble gas concentrations exist, the sample cartridge may be purged in the laboratory with clean filtered air to minimize noble gas interferences. The cartridge will be sealed in a clean plastic bag and taken to the analytical laboratory counting room for analysis.

Areas are barricaded and posted as airborne radioactivity areas whenever average concentrations in that area exceed 0.3 DAC of the values specified in 10 CFR 20, Appendix B to Parts 20.1001-20.2401, Table 1, Column 3. The use of respiratory protection equipment is evaluated when a significant potential for an airborne hazard exists, or when entering an area of unmonitored, unknown airborne contamination.

Various methods for control and reduction of airborne activity are incorporated into Energy Northwest Radiation Protection Procedures, which include proper use of the ventilation system, use of specially designed equipment to collect radioactive airborne contaminants, methods for reducing and containing contamination to prevent it becoming airborne, and methods for cleanup of primary water prior to opening this system.

The respiratory protection program is designed to meet the requirements of 10 CFR 20.1701, 1702, 1703, and 1704. Procedures for fitting, training, maintenance, and testing of the respiratory protection equipment are included. All equipment is required to have appropriate National Institute for Occupational Health and Safety (NIOSH)/Mine Safety and Health Administration (MSHA) approval if available. Unless the requirements are met, the protection factors are not used. Unapproved equipment may be used in some instances where reduction of intake of radioactive material will result, but no protection factor is taken for its use. An example of this is use of charcoal cartridges in atmospheres where radioiodines are present to reduce the inhalation of these materials.

12.5.3.6 Radioactive Material Control Including Special Nuclear Materials (SNM)

Columbia Generating Station has implemented a program to ensure safe radioactive material control which include:

a. Procedures and training for receiving and shipping radioactive materials in accordance with 10 CFR 20.1906,

b. Procedures and training for storing licensed materials in accordance with 10 CFR 20.1801 and 1802,

c. Procedures and training for shielding, handling, and inventory control of sealed and unsealed radioactive sources and SNM,

d. Procedures and training for posting and/or labeling radioactive materials in accordance with 10 CFR 20 requirements,

e. Procedures and training for leak testing sealed radioactive sources in accordance with Technical Specifications, and

f. Procedures and training for disposal of all licensed radioactive materials in accordance with 10 CFR 20, 10 CFR 30, 10 CFR 40, 10 CFR 61, or 10 CFR 70.

g. Procedures and training for activities associated with dry storage cask loading and unloading of spent fuel and the operation of the Independent Spent Fuel Storage Installation for storage of spent fuel in accordance with 10 CFR 72.

Inherent in the above mentioned procedures is direction for handling liquid standard solutions used for calibration of plant instrumentation which include ventilation control, shielding, waste collection, contamination control, and monitoring.

Plant procedures assign the responsibility for control and monitoring of sealed and unsealed sources and byproduct materials to the RPM. The Vice President Engineering is responsible for overall implementation of control of SNM. This is accomplished through a Nuclear Material Manager who is appointed in writing by the Vice President Engineering. The Chemistry/Radiological Services Director/Radiation Protection Manager is responsible for minimization of radioactive waste and the preparation, offsite shipment, and disposal of radioactive materials and radwaste. Monitoring during handling of nuclear materials is provided by Radiation Protection, as appropriate.

12.5.3.7 Personnel Dosimetry Procedures

Section 12.5.2 describes the monitoring devices used to provide the primary legal records of exposure incurred by personnel and additional equipment used to backup and supplement this data. Records of radiation exposure are maintained for each individual for whom personnel monitoring is required by 10 CFR 20.1502. Reports of required monitoring are documented on NRC Form 5 or electronic media containing all the information required by NRC Form 5. Energy Northwest provides these individual radiation exposure records pursuant to the provisions of 10 CFR 19.13.

For monitored individuals, a determination of prior occupational dose is made per the requirements of 10 CFR 20.2104. This includes the dose received during the current year at Columbia Generating Station and other nuclear facilities. This exposure history is documented on NRC Form 4 or equivalent.

All individuals who are monitored for external radiation exposure are monitored for internally deposited radioactivity as follows:

a. Initial, performed prior to the individual entering any radiologically controlled area. Monitoring may be either quantitative (whole body count) or qualitative (passive monitoring).

b. When a worker formally declares pregnancy, a whole body count is performed.

c. At termination of employment at Columbia Generating Station, if the individual has been monitored for external radiation exposure. Monitoring may be either quantitative (whole body count) or qualitative (passive monitoring).

d. Whenever an individual causes an alarm of the passive whole body contamination monitors (portal monitors) and internal deposition is suspected, a quantitative bioassay (whole body count) is performed.

e. Special bioassays as determined by the RPM.

Energy Northwest monitors all adult workers who are likely to exceed 10% of the 10 CFR 20 annual occupational radiation exposure limits for adults. Radiation exposure monitoring for minors (individuals less than 18 years of age) is required if they are likely to exceed 0.1 rem deep dose equivalent in a year. Monitoring for declared pregnant women is required if they are likely to exceed 0.1 rem deep dose equivalent during the entire pregnancy. Monitoring is not required for visitors who enter a restricted area, since they are not likely to exceed 10% of the annual limit. However, confirmatory monitoring of visitors may be performed if directed by Radiation Protection supervision. The determination of whether an individual is likely to exceed 10% of the 10 CFR 20 limit, and thus require monitoring, is based on a prospective evaluation. An evaluation is not required for each individual, but is based on employees with similar job functions.

For internal exposure, monitoring is required if an adult worker is likely to receive, in 1 year, an intake in excess of 10% of the applicable 10 CFR 20 annual limit. The need for internal exposure monitoring of individuals is based on a prospective evaluation which will be updated whenever there is an indication that there has been significant fuel failure.

Since ^{90}Sr and ^{3}H are not measurable by whole body counting, in-vitro bioassay (urinalysis) will be performed when the plant radiation surveillance program indicates a potential need. All results obtained from in-vivo and in-vitro bioassay will be evaluated and become part of the individual's record, as appropriate.

Energy Northwest complies with the adult occupational dose limits identified in 10 CFR 20.1201. An individual is allowed to exceed these 10 CFR 20 exposure limits only in exceptional situations where the dose received is in accordance with the conditions of a planned special exposure, as specified in 10 CFR 20.1206. Records of planned special exposures are maintained and retained per the requirements of 10 CFR 20.2105. Written reports of planned special exposures are submitted to the NRC per the requirements of 10 CFR 20.2204.

In addition to the 10 CFR 20 dose limits, Energy Northwest uses administrative exposure hold points to maintain exposures ALARA. Plant procedures allow an individual to exceed an administrative hold point but, only if a prior approved dose extension is obtained.

Procedurally, DLR badges are processed for radiation workers semiannually at a minimum but may receive interim processing if an abnormal exposure is suspected. Pocket dosimeters and other auxiliary monitoring devices are used to maintain an estimate of an individual's dose during the interim period between processing of DLRs. The use of auxiliary monitoring

devices as a permanent record of an individual's dose is restricted to times when DLRs are lost or damaged or give a false result. When a large discrepancy exists between the two devices, it must be established that the DLR is in error before the auxiliary monitoring device result is assigned as the permanent record.

Plant supervisors are notified of their assigned worker's exposure status and are responsible for maintaining these and their own exposure to ALARA and within specified limits.

Personnel dosimeters, that require processing to determine the radiation doses, are processed and evaluated in accordance with the requirements of the National Voluntary Laboratory Accreditation Program (NVLAP).

12.5.3.8 Radiation Protection Surveillance Program

The practices incorporated into the overall structure to ensure that the RPP is maintained at a high level and upgraded to meet new requirements and problems are the following:

a. Section 12.1.1 describes the organization structured to provide assurance that the ALARA policy is effective. It is also pointed out in this section that the plant RPP has several levels of review from a performance standpoint;

b. Section 12.1.3 describes the process for review of plant procedures for ALARA consideration;

c. The RWP program and other records previously described provide a valuable source of information and are used to determine where the occupational radiation exposures are occurring and as a means of review for possible methods of exposure reduction;

d. The Chemistry/Radiological Services Director and his staff work on an individual and group basis with other plant organizations to determine what their principal sources of exposure are and to look for methods of reducing these exposures;

e. Procedures provide for routine maintenance, calibration, and testing of all radiation instrumentation and equipment. New equipment will be added as necessary for replacement and to supplement that existing. Written procedures are provided for use of equipment where required;

f. Plant facilities are routinely reviewed for possible improvements from a radiation protection standpoint. Section 12.1.3 describes several changes that have been incorporated into plant design for this purpose. Other considerations are additional shielding where practicable, improved ventilation control, additional equipment, and increased physical restriction;

g. The routine and special surveys previously described point out levels of radioactive contamination in plant areas. The Columbia Generating Station staff is committed to maintaining a clean plant and considers it routine procedure to reduce levels of contamination whenever such action will not result in an increase of occupational radiation exposure to personnel;

h. One aspect that is considered important and used in implementing the RPP is the incorporation of previous reactor and power reactor experience in this area. Previously successful methods, procedures, and equipment are used whenever possible; and

i. Training of all personnel who work in the plant in radiation safety practices is mandatory and given a high priority by Energy Northwest and Columbia Generating Station Management. The Training Director, in conjunction with the Chemistry/Radiological Services Director, is responsible for development of all training programs, including radiation safety indoctrination.

Radiation Protection assists in this training by providing instructors for some phases. The degree of training provided each plant worker is dependent on his function and degree of responsibility; however, all radiation workers in the plant are provided training considered necessary or required for their position. The training programs provided are designed to meet the requirements of 10 CFR 19.12 and the guidance of Regulatory Guides 1.8, 8.8, 8.10, 8.27, and 8.29. Clarifications, elaborations, and exceptions in using the above mentioned regulatory guides are located in the Energy Northwest Procedures.

Table 12.5-1

Health Physics Instrumentation

Type	Number Available	Radiation Detected	Sensitivity Range
Ion chamber dose rate survey meter	9	Beta, gamma	0-5E4 mR/hr (gamma) 0-2.E4 mrad/hr (beta) cfx 5R/hr
High range ion chamber dose rate survey meter	2	Gamma	0-1.999E7 mR/hr
Telescoping dose rate survey meter	3	Gamma	0-1.0E3 R/hr
Neutron dose rate survey meter	2	Neutron	0.1-5.0E3 mrem/hr
Contamination survey meter with end window or pancake GM probe	20	Beta, gamma	0-5.0E4 cpm or 0-5.0E5 cpm
Contamination survey meter with scintillation detector	2	Alpha	0-5.0E5 cpm
Condenser R-meter	1	Gamma	0-100 R
Direct reading pocket dosimeters (Electronic Alarming type)	300	Gamma	0-999 rem
Direct reading pocket dosimeters (Pocket Ion Chamber type)	200	Gamma	Various ranges 0-500 mR(typical)

Chapter 13

CONDUCT OF OPERATIONS

TABLE OF CONTENTS

Section Page

13.1 ORGANIZATION STRUCTURE 13.1-1
13.1.1 MANAGEMENT AND TECHNICAL SUPPORT ORGANIZATION 13.1-1
13.1.1.1 Technical Support for Operations 13.1-1
13.1.1.2 Organizational Arrangement 13.1-2
13.1.1.3 Qualifications 13.1-3
13.1.2 OPERATING ORGANIZATION 13.1-3
13.1.2.1 Plant Organization 13.1-3
13.1.2.2 Plant Personnel Responsibilities and Authorities 13.1-3
13.1.2.2.1 Plant Management 13.1-3
13.1.2.2.2 Operations Supervision 13.1-4
13.1.2.2.3 Operating Shift Crew Supervision 13.1-5
13.1.2.2.4 Shift Technical Advisor 13.1-6
13.1.2.2.5 Licensed Operators 13.1-6
13.1.2.2.6 Nonlicensed Operators 13.1-6
13.1.2.2.7 Engineering Management 13.1-7
13.1.2.2.7.1 System Engineering Manager 13.1-7
13.1.2.2.7.2 Design Engineering Manager 13.1-8
13.1.2.2.7.3 Reactor/Fuels Manager 13.1-8
13.1.2.2.7.4 Technical Services Manager 13.1-9
13.1.2.2.7.5 Deleted 13.1-9
13.1.2.2.7.6 Deleted 13.1-9
13.1.2.2.7.7 Deleted 13.1-9
13.1.2.2.8 Nuclear Engineering Supervision 13.1-9
13.1.2.2.9 Radiological Services Supervision 13.1-9
13.1.2.2.10 Chemistry Supervision 13.1-10
13.1.2.2.11 Maintenance Supervision 13.1-10
13.1.2.2.12 Planning, Scheduling and Outage Supervision 13.1-10
13.1.2.2.13 Quality Supervision 13.1-10
13.1.2.3 Operating Shift Crews 13.1-11
13.1.2.3.1 Shift Crew Composition 13.1-11
13.1.2.3.2 Shift Responsibility for Radiation Protection 13.1-11
13.1.2.3.3 Shift Maintenance Support 13.1-11
13.1.2.3.4 Shift Fire Brigade 13.1-12
13.1.2.3.5 Shift Chemistry Support 13.1-12

Chapter 13

CONDUCT OF OPERATIONS

TABLE OF CONTENTS (Continued)

Section — Page

13.1.3 QUALIFICATIONS OF NUCLEAR PLANT PERSONNEL 13.1-12
13.1.3.1 Plant Management 13.1-12
13.1.3.2 Operations Department 13.1-13
13.1.3.2.1 Operations Director 13.1-13
13.1.3.2.2 Shift Manager 13.1-13
13.1.3.2.3 Control Room Supervisor 13.1-13
13.1.3.2.4 Shift Technical Advisor 13.1-14
13.1.3.2.5 Shift Support Supervisor 13.1-14
13.1.3.2.6 Reactor Operator 13.1-14
13.1.3.2.7 Equipment Operator 13.1-14
13.1.3.3 Engineering 13.1-14
13.1.3.3.1 Engineer in Charge 13.1-14
13.1.3.3.2 Engineering Managers 13.1-15
13.1.3.3.3 Engineering Supervisors 13.1-15
13.1.3.3.4 Fire Protection Engineer 13.1-15
13.1.3.4 Maintenance 13.1-15
13.1.3.4.1 Maintenance Director 13.1-15
13.1.3.4.2 Maintenance Supervisors 13.1-16
13.1.3.5 Chemistry and Radiological Services 13.1-16
13.1.3.5.1 Chemistry/Radiological Services Director 13.1-16
13.1.3.5.2 DELETED 13.1-16
13.1.3.5.3 Radiation Protection Manager 13.1-16
13.1.3.5.4 Radiological Services Supervisors 13.1-17
13.1.3.5.5 Chemistry Supervisors 13.1-17
13.1.3.6 DELETED 13.1-17
13.1.3.7 Quality 13.1-17

13.2 TRAINING 13.2-1
13.2.1 PLANT STAFF TRAINING PROGRAM 13.2-1
13.2.2 INITIAL AND CONTINUING TRAINING 13.2-2
13.2.2.1 Licensed Operators 13.2-2
13.2.2.1.1 Initial Training 13.2-2

Chapter 13

CONDUCT OF OPERATIONS

TABLE OF CONTENTS (Continued)

Section Page

13.2.2.1.2 Continuing Training 13.2-3
13.2.2.2 Nonlicensed Operator Training 13.2-3
13.2.2.2.1 Initial Training 13.2-3
13.2.2.2.2 Continuing Training Program 13.2-4
13.2.2.3 Shift Technical Advisor Training 13.2-4
13.2.2.3.1 Initial Training 13.2-4
13.2.2.3.2 Continuing Training 13.2-4
13.2.2.4 Other Plant Personnel (Maintenance, Health Physics, Chemistry) 13.2-5
13.2.2.4.1 Initial Training 13.2-5
13.2.2.4.2 Continuing Training 13.2-5
13.2.2.5 Fire Brigade 13.2-5
13.2.2.5.1 Initial and Continuing Training 13.2-5
13.2.2.5.2 Offsite Fire Department 13.2-6
13.2.3 TRAINING PROGRAM EFFECTIVENESS 13.2-7
13.2.4 PLANT TRAINING RECORDS 13.2-7
13.2.5 OTHER TRAINING DOCUMENTS 13.2-7

13.3 EMERGENCY PLANNING 13.3-1

13.4 REVIEW AND AUDIT 13.4-1
13.4.1 ONSITE REVIEW 13.4-1
13.4.2 INDEPENDENT REVIEW 13.4-1
13.4.3 AUDIT PROGRAM 13.4-2

13.5 PLANT PROCEDURES 13.5-1
13.5.1 ADMINISTRATIVE PROCEDURES 13.5-1
13.5.1.1 Conformance With Regulatory Guide 1.33, Revision 2 ..... 13.5-1
13.5.1.2 Preparation of Procedures 13.5-1
13.5.1.3 Procedures 13.5-1
13.5.2 OPERATING AND MAINTENANCE PROCEDURES 13.5-2
13.5.2.1 Control Room Operating Procedures 13.5-2
13.5.2.2 Other Procedures 13.5-3

13.6 INDUSTRIAL SECURITY 13.6-1

Chapter 13

CONDUCT OF OPERATIONS

LIST OF TABLES

Number	Title	Page
13.1-1	Minimum Shift Crew Composition	13.1-19

Chapter 13

CONDUCT OF OPERATIONS

LIST OF FIGURES

Number	Title
13.1-1	Energy Northwest Organization
13.1-2	Nuclear Generation Organization
13.1-3	Plant General Manager Organization
13.1-4	Operational Support Organization
13.1-5	(Deleted)
13.1-6	Vice President Engineering Organization
13.1-7	Quality Organization
13.1-8	(Deleted)
13.1-9	Operations Organization
13.1-10	Operations Crew
13.1-11	Radiological Services Organization
13.1-12	Chemistry Organization
13.1-13	Plant Maintenance Organization

Chapter 13

CONDUCT OF OPERATIONS

13.1 ORGANIZATION STRUCTURE

The organizational structure of Energy Northwest and the line of responsibility for the operation of Columbia Generating Station (CGS) is in accordance with established administrative and quality standards that apply to this operation. The applicable organization charts are shown in Figures 13.1-1 through 13.1-13.

13.1.1 MANAGEMENT AND TECHNICAL SUPPORT ORGANIZATION

Energy Northwest is a municipal corporation and a joint operating agency of the State of Washington. The management and control of Energy Northwest is vested in the Executive Board.

The Executive Board consists of five members of the Energy Northwest Board of Directors and six outside directors. Three outside directors are selected by the Board of Directors, and three directors are appointed by the Governor of the State of Washington.

The full Board of Directors has members representing each of Energy Northwest's member utilities, and has the authority to select the inside members of the Executive Board and to terminate existing projects or authorize new projects.

Certain responsibilities for day-to-day management of Energy Northwest have been delegated to the Chief Executive Officer (the chief administrative officer).

The staff of Energy Northwest includes senior management level positions, which are responsible to the Chief Executive Officer for performance of specialized work by their respective groups. See Figure 13.1-1 for an organization chart. However, as specified in Technical Specifications, Section 5.2.1, the Chief Executive Officer retains corporate responsibility for overall plant nuclear safety.

13.1.1.1 Technical Support for Operations

Technical support for the nuclear organization is the responsibility of the Chief Nuclear Officer, Site Vice President, Plant General Manager, and Vice President, Engineering.

The Plant General Manager is responsible for the safe, reliable, and efficient operation and maintenance of CGS and for providing major services which support plant operation.

Reporting to the Chief Nuclear Officer includes the Site Vice President, Corporate Operations Support General Manager, if staffed, and the Quality Manager. Security reports to the Corporate Operations Support General Manager, if staffed at that level.

Reporting to the Chief Nuclear Officer are departments that provide support to CGS in the areas of Operations, Engineering, and Quality (see Figure 13.1-2).

The Quality Manager's responsibilities are described in the Energy Northwest Operational Quality Assurance Program Description (OQAPD), EN-QA-004. An organization chart is provided in Figure 13.1-7.

Reporting to the Site Vice President are the Vice President, Engineering, the Plant General Manager, the Nuclear Projects General Manager, and the Training Director. (see Figure 13.1-4). The Reactor and Major Maintenance Manager reports to the Nuclear Projects General Manager, if staffed.

Reporting to the Vice President, Engineering are departments which provide technical support in the areas of reactor fuels and engineering. The Vice President, Engineering is responsible for design control of all authorized plant modifications, technical expertise in the fundamental engineering disciplines such as mechanical, electrical, civil, chemical, fuels, as well as specialty areas such as materials, welding, and inservice inspection engineering. In addition, the Vice President, Engineering is responsible for providing technical support in the area of system engineering. An organization chart for Engineering is shown in Figure 13.1-6.

13.1.1.2 Organizational Arrangement

Figures 13.1-1 through 13.1-7 provide the current corporate structure as applicable to CGS support organizations. The number of personnel to be assigned to each of the working level organizations will be determined based on workload and need for pertinent expertise. If the need arises, qualified outside contractors will be used to support the Energy Northwest staff.

13.1.1.3 Qualifications

Qualification requirements for key technical support personnel who fulfill the responsibilities identified in Section 13.1.1.1 shall meet the criteria of Regulatory Guide 1.8, Rev. 1-R (May 1977) (see the OQAPD). The personnel qualification and training programs are under continuing review and modification to reflect the changes following the TMI accident. The Vice President Engineering meets the definition and qualifications of "Engineer in Charge."

Any Vice President, Director or Manager listed in Section 13.1.1.1 may authorize deviations from the qualification requirements for subordinate positions when, in their judgment, the combined education, experience, and managerial competency of a particular individual are sufficient to ensure adequate performance of assigned responsibilities. Such exceptions will be documented in writing and will not be used as a means to degrade the overall qualifications of the support staff. Deviations are not authorized for those positions whose qualifications are described in the Technical Specifications and the OQAPD.

13.1.2 OPERATING ORGANIZATION

13.1.2.1 Plant Organization

This section describes the structure, functions, and responsibilities of the onsite organization established to operate and maintain CGS. Figures 13.1-9 through 13.1-13 show the plant organizations that directly operate and maintain CGS. The principal departments that function directly under the supervision of the Plant General Manager are: Operations, Maintenance, Radiological Services, and Chemistry (see Figure 13.1-3).

The Security Force Lieutenant is responsible to the Plant General Manager for day-to-day operation of the Plant Security Program and receives functional supervision from Operations Support management.

Position titles, NRC licenses required, and lines of functional reporting, as well as direct lines of communications, are indicated on the organization charts.

13.1.2.2 Plant Personnel Responsibilities and Authorities

13.1.2.2.1 Plant Management

The Plant General Manager has direct responsibility and authority for all plant activities. The Plant General Manager reports directly to the Site Vice President.

The Plant General Manager has the responsibility for management of the following plant departments: Operations, Chemistry, Radiological Services, Planning, Scheduling and Outage, and Maintenance.

A Security Force Lieutenant exercises supervision and authority over the onsite security personnel. The Security Force Lieutenant reports to the Plant General Manager or the designated representative on day shifts and to the Shift Manager during other than normal working hours (i.e., backshifts, weekends, and holidays).

In the event of incapacitation of key plant personnel or unexpected contingencies of a temporary nature, the line of succession of authority and responsibility for all plant activities is as follows:

a. Plant General Manager,
b. Operations Director,
c. One of the Assistant Operations Managers (see below),
d. Duty Shift Manager.

13.1.2.2.2 Operations Supervision

Operations is under the direction of the Operations Director. The Operations Director is responsible for overall plant operation. The Operations Director directs and manages the activities of operations to ensure safe plant operation and control of plant systems in compliance with licensing documents.

The Operations Director is responsible for being cognizant of and complying with the OQAPD.

The Operations Director is responsible for the day-to-day routine as well as the abnormal or emergency operating situations that may arise. The Operations Director is responsible to see that all operations are carried out in a safe, efficient manner and that the plant is operated in strict conformance to the Operating License, Technical Specifications, and in accordance with approved written procedures. Additionally, the Operations Director is responsible for operating personnel schedules, development, and periodic review of plant operating procedures and instructions, and the preparation of operating records and reports.

The Operations Crew, Operations Support, Operations Work Control and Operations Training Managers (hereinafter referred to collectively as Assistant Operations Managers (AOMS)) support and assist the Operations Director in the performance of these duties. The Operations Crew Manager is responsible to the Operations Director for the immediate supervision of the Operations staff that supports work team and outage activities, and as such, they receive direction from the Operations Director for the day-to-day routine and supervise implementation. The Operations Support Manager is responsible to the Operations Director for the immediate supervision of the Operations staff that supplies miscellaneous support to the Operations Department.

The AOMs may be required to maintain a current Senior Reactor Operator (SRO) license. During periods of transition such as promotion, the individual with a current SRO, either the Operations Director or one of the AOM will have the responsibility for immediate supervision of the Operations staff. In either case, the individual with the SRO may only be relieved by another individual possessing a current SRO. The Operations Director will designate one of the assistants to assume total responsibility for the Operations Director's duties (as described in this section) during periods when the Operations Director is temporarily absent from the plant. See Figure 13.1-9 for an organization chart of the Operations Department.

The plant Fire Marshal assists the Operations Director in the implementation of the Fire Protection Program. Responsibilities include ensuring that the fire protection systems and components are maintained and that the Fire Brigade is adequately trained and staffed. Additional details related to the roles and responsibilities of the Fire Marshal are contained in Appendix F, Table F.3-1, Section A.1

13.1.2.2.3 Operating Shift Crew Supervision

Within the Operations Department are a minimum of five shift crews during normal operations. In some situations, such as refueling outages, these may be reduced to four shift crews. Plant management and technical support will be present or on call at all times to provide advice to the shift personnel.

The Shift Manager holds an SRO license and is directly responsible to the Operations Director (see Figure 13.1-10 for typical Operations Crew organization chart). The Shift Manager is in charge of all plant operations on shift and is directly in charge of and responsible for the shift crew assigned to his specific shift. The Shift Manager has the authority to institute immediate action in any given situation to shut the plant down, or eliminate difficulties to preclude violation of the Operating License or Technical Specifications, or to avert possible injury or undue radiation exposure of personnel. Additionally, the Shift Manager may at times direct the activities of other personnel during tasks such as backshift maintenance, radiation protection, chemistry control, and security implementation. The Shift Manager also keeps plant management appraised of situations that may affect plant safety and/or constitute a hazard to the general public. During other than normal working hours, the Shift Manager assumes responsibility for all plant operations in the absence of senior plant management personnel.

The Control Room Supervisor holds an SRO license and assists the Shift Manager in the performance of duties and assumes those duties during periods when the Shift Manager is unavailable. The Control Room Supervisor is responsible for supervising the activities of the Control Room Reactor Operators and other assigned personnel (i.e., equipment operators and maintenance support personnel) required to operate the plant safely and efficiently. The Control Room Supervisor is directly responsible to the Shift Manager.

If stationed, the Shift Support Supervisor assists the Shift Manager in the performance of his duties. The Shift Support Supervisor is responsible for the supervision and direction of personnel assigned to perform balance-of-plant (BOP) operating functions such as operations of makeup water treatment system, radwaste processing systems, and other plant support systems. The individual is responsible for performing administrative duties as assigned.

All core alterations are observed and directly supervised by either a licensed SRO, or licensed SRO limited to fuel handling, who has no concurrent responsibilities during the performance of the core alterations.

13.1.2.2.4 Shift Technical Advisor

A Shift Technical Advisor (STA) qualified individual provides engineering expertise on shift pursuant to safe and efficient operation of the plant. The STA function may be staffed by a dedicated individual (licensed or non-licensed), or by an individual filling a dual role as the Control Room Supervisor, Shift Manager or Shift Support Supervisor. The STA qualified individual monitors reactor core operations, and core management and reactivity controls. The STA normally reports to the Shift Manager.

13.1.2.2.5 Licensed Operators

In addition to the licensed supervisors listed above, there are a minimum of two reactor operators on each shift. The reactor operator (RO) holds a reactor operator or senior reactor operator license and is responsible to the Control Room Supervisor for the safe and efficient operation of the plant from the main control room. The RO follows approved procedures in performing work and is responsible for taking the immediate action required to maintain or bring the plant to a safe condition during abnormal and/or emergency conditions. However, if a particular situation is not covered by a procedure, the individual may seek advice from the Control Room Supervisor, or if the situation is critical, may use his or her own judgment to prevent damage to equipment, injury to personnel, or undue radiation exposure of plant personnel and the general public. The RO directs and supports the activities of other operators in the performance of their duties and works cooperatively with all plant service groups that interface with plant operation.

13.1.2.2.6 Nonlicensed Operators

The equipment operators (EO) are responsible to the Control Room Supervisor or Shift Support Supervisor for assisting in the plant operation and performing work assignments from local control stations and all other defined areas outside of the central control room. The EO follows approved procedures in doing work and does not deviate from those procedures except as authorized. The EO performs assigned routine inspections and manipulates equipment without close supervision. The EO also performs special assignments as directed.

13.1.2.2.7 Engineering Management

Reporting to the Vice President, Engineering is the System Engineering Manager, the Technical Services Manager, the Design Engineering Manager, and the Reactor Fuels Manager.

They are responsible for developing and implementing plant programs and procedures which provide proper management control in the above areas and thus ensure compliance with the conditions of the operating license and proper plant safety. They interface with other support organizations to support plant operations.

The engineering organizations are responsible for being cognizant of and complying with the Operational Quality Assurance Program Description.

13.1.2.2.7.1 System Engineering Manager. The System Engineering Manager, with the assistance of direct supervisory reports, is responsible for long-term management of and the health and reliability of systems and components, overall direction of the system engineering program in support of plant operation, maintenance, and chemistry, and developing long range plans for system improvement and performance in the areas of NSSS systems, control/electrical systems, and BOP systems.

The System Engineering Manager is responsible for the development, implementation, and execution of programs to monitor system performance, to conduct inspections, and to perform specialized testing. The objective is to identify potential component degradation, minimize threats to successful operation of systems and the plant, and to identify opportunities for improvement.

The System Engineering Manager is the primary interface with the Design Engineering Manager and Technical Services Manager in support of maintaining plant compliance with design and licensing requirements.

The System Engineering Manager is responsible for implementing performance monitoring of plant systems and critical plant programmatic processes. This includes providing recommendations to plant management for implementation of new program requirements, performing periodic assessments of existing programs, and recommending component or system improvements. The System Engineering Manager is responsible for daily plant support, responding to emergent issues, operability assessments, and providing troubleshooting expertise to operations and maintenance.

System Engineering Supervisors direct the activities of the System Engineering staff in support of plant operation in the functional areas of mechanical engineering, instrumentation and control engineering, and electrical engineering. Activities include initiating engineering design

changes, making recommendations for improved operation, supporting operability assessments and providing operating and maintenance support for instrumentation and control systems, mechanical systems, electrical systems, plant water systems, and waste handling systems.

13.1.2.2.7.2 Design Engineering Manager. The Design Engineering Manager is responsible to assist System Engineering for daily plant support, responding to emerging issues, and operability assessments. The Design Engineering Manager is responsible for maintenance of the plant design basis, performance of plant design changes, and design and drafting. This includes non-modification design related activities.

The Design Engineering Manager, with the assistance of direct supervisory reports, manages the various engineering design disciplines including mechanical, civil/stress, structural, electrical, instrumentation and other teams that are formed to address specific design engineering or business needs.

13.1.2.2.7.3 Reactor Fuels Manager. The Reactor Fuels Manager is responsible for fuel design, overall management of the reactor core, and monitoring of core parameters.

The Reactor Fuels Manager, with the assistance of direct supervisory reports, is responsible for providing technical support to Operations in management of refueling floor activities, support to Maintenance in resolving refueling equipment problems, providing technical resources for resolution of vessel hardware problems and concerns with interfacing systems which influence or monitor core reactivity, for maintaining involvement in applicable industry initiatives affecting core reactivity issues and new developments in core operation, providing recommendations to plant management on operating strategies in support of normal and off-normal operating situations, and planned shutdown and startup activities.

The Reactor Fuels Manager ensures sound fuel design philosophy is followed, fuel designs provide no unreasonable challenges to safe plant operation, and probabilistic safety assessments (PSA) are performed for CGS.

The Fuel Design/Reactor Engineering staff are responsible for performing periodic core physics evaluations to monitor the operation, burnup, and thermal/hydraulic performance of the reactor core. They provide and maintain plant operating curves and reactivity data for use by shift operation personnel and are responsible for the onsite accountability of nuclear fuel and special nuclear materials. The Fuel Design/Reactor Engineering staff are responsible

for core design, fuel planning, licensing support (e.g., COLR, accident/transient analysis), and analytical work necessary to support cycle operation (e.g., control rod pattern recommendations).

The Safety Analysis/PSA staff provide probabilistic safety assessments for CGS. They provide analytical support for radiation dose analysis, shielding, equipment qualification, ODCM, emergency procedures and primary and secondary containment analyses.

13.1.2.2.7.4 Technical Services Manager, with the assistance of direct supervisory reports, is responsible for plant, code, and component programs. The Technical Services personnel are responsible for Equipment Qualification (EQ), Fire Protection (FP), In Service Test (IST), Thermal Performance (TP), ASME Section XI, ISI, BWRVIP, welding, Appendix J Local Leak Rate Testing (LLRT), pump, valve (AOVs, MOVs, and reliefs), large motor, circuit breaker, relay, and Component Condition Monitoring programs, including vibration analysis, oil analysis, and thermography, and performing engineering needed for special procurement.

13.1.2.2.7.5 Deleted

13.1.2.2.7.6 Deleted

13.1.2.2.7.7 Deleted

13.1.2.2.8 Nuclear Engineering Supervision

See Section 13.1.2.2.7.3.

13.1.2.2.9 Radiological Services Supervision

See Section 12.5.1 for a description of duties, responsibilities, and reporting relationships. See Figure 13.1-11 for an organization chart.

13.1.2.2.10 Chemistry Supervision

Chemistry is under the direction of the Chemistry/Radiological Services Director, who reports to the Plant General Manager. The group provides plant oversight for system chemistry optimization and control, gaseous, and liquid effluent releases, radwaste processing and chemical control, the Offsite Dose Calculation Manual, the Radiological Environmental Monitoring Program (REMP), and Radiological Effluent Report. See Figure 13.1-12 for an organization chart.

13.1.2.2.11 Maintenance Supervision

Maintenance is under the direction of the Maintenance Director. The Maintenance Director is responsible for the Maintenance Program and for the development and implementation of maintenance processes and procedures which will ensure the safe and reliable operation of plant equipment. The Maintenance Director is responsible for primary component level troubleshooting. The Maintenance Director reports to the Plant General Manager. The organization is shown in Figure 13.1-13.

The Maintenance Director, with the assistance of direct managerial reports, manages the following activities: Maintenance Services, FIN Component Group, Mechanical Component Group, I & C Component Group, Electrical Component Group, and other teams that are formed to address specific maintenance or business needs. Shops and/or teams may be combined as long as supervisory qualifications are maintained as described in Section 13.1.3.4.

All plant modifications are accomplished through this department either directly or through the actions of the Site Support Services contractor. Engineering, Training, and Support Services, as discussed in Section 13.1.1.1, provide support for this department. Other support is provided when needed in the form of vendor representatives for technical guidance on maintenance of major components of the plant.

Maintenance Supervisors are responsible for the day-to-day implementation of the Maintenance Program. They are responsible for maintaining plant electrical, instrumentation, and mechanical systems through preventive and corrective maintenance and surveillance programs.

13.1.2.2.12 Planning, Scheduling and Outage Supervision

This organization is responsible for managing the work process and ensuring work schedule consistency. It is also responsible for the development and oversight of outage preparation and implementation and coordination of outage work.

13.1.2.2.13 Quality Supervision

A description of duties and responsibilities for the Quality organization is contained in the OQAPD.

13.1.2.3 Operating Shift Crews

13.1.2.3.1 Shift Crew Composition

Shift coverage is provided by using a rotating shift schedule depending on operating needs. The schedules are based on a nominal 40-hr work week and shifts are normally of 8 or 12 hr duration (excluding shift turnover time).

During normal operations, a minimum of five crews provide 24 hr/day, 7 day/week coverage. Table 13.1-1, as well as the Technical Specifications and the Emergency Plan, identify the minimum number and type of licensed and unlicensed personnel required to be onsite.

For those operations that involve core alterations, direct supervision of all fuel movements is provided by an individual holding an SRO license. This person has no other concurrent responsibilities during this assignment.

It is CGS's policy to maintain an adequate number of personnel in the Shift Manager, Control Room Supervisor, Shift Support Supervisor, STA (if required), Control Room Reactor Operator, and Equipment Operator positions such that the use of overtime is not routinely required to compensate for inadequate staffing.

13.1.2.3.2 Shift Responsibility for Radiation Protection

A minimum of one Health Physics Technician is assigned to each operating shift to provide radiological surveillance/control (see Table 13.1-1).

All shift personnel are instructed in the fundamentals of health physics such as implementing radiation protection procedures, radiation and contamination surveys, use of protective barriers and signs, use of protective clothing and breathing apparatus, radiation monitoring, and accumulated dose.

Shift personnel are responsible for immediately informing the on-duty Shift Manager if conditions develop that exceed or are likely to exceed preestablished radiation levels or exposure limits or if they believe that unsafe or hazardous conditions exist. The Shift Manager

will evaluate the situation and if a radiological condition exists that warrants attention and investigation, the appropriate Health Physics personnel will be called for assistance.

13.1.2.3.3 Shift Maintenance Support

Craftsmen and technicians, as required, are available to provide maintenance support and surveillance testing in the areas of instrumentation and controls and mechanical and electrical equipment.

13.1.2.3.4 Shift Fire Brigade

A Shift Fire Brigade, consisting of a minimum of five members of the nominal shift complement, shall have advanced fire training and be equipped for fire fighting. This select group on each operating shift will have primary response capabilities and will respond to emergencies involving fire and/or emergencies where life threatening danger exists.

The brigade shall not include the minimum shift crew complement required to safely shut down the unit. At a minimum the brigade leader and two brigade members shall have sufficient knowledge of plant fire safe shutdown systems. The balance of the fire brigade shall be composed of Fire Brigade trained support personnel. See Section 13.2.2.5 for the qualification requirements for fire brigade members.

13.1.2.3.5 Shift Chemistry Support

At least one qualified chemistry technician is assigned to each operating shift for the purpose of providing chemistry support in the area of chemical surveillances while the plant is in Modes 1, 2, or 3.

13.1.3 QUALIFICATIONS OF NUCLEAR PLANT PERSONNEL

The minimum educational and experience qualifications for the onsite plant personnel are based on Regulatory Guide 1.8, Rev. 1-R (May 1977). If an individual who does not meet the minimum qualification criteria is placed in a discipline, it will be specifically pointed out and justification or explanation provided. See Section 13.1.1.3. Personnel qualification and training programs are under continual review and modification to reflect the changes following TMI. The minimum qualification requirements identified in Section 13.1.3.1 will be revised accordingly. The licensed ROs and SROs meet or exceed the minimum qualifications of the supplemental requirements specified in Sections A and C of Enclosure 1 of the March 28, 1980, NRC letter to all licensees, as modified by NUREG-0737, November 1980, "Clarification of TMI Action Plan Requirements," Enclosure 1, Section 1.A.2.1, "Immediate Upgrading of Reactor Operator and Senior Reactor Operator Training and Qualifications."

13.1.3.1 Plant Management

The Plant General Manager shall have 10 years of responsible power plant experience of which a minimum of 3 years shall be nuclear power plant experience. A maximum of 4 years of the remaining 7 years of experience may be fulfilled by academic training on a one-for-one time basis. This academic training shall be in an engineering or scientific field generally associated with power production. The Plant General Manager shall have acquired the experience and training normally required for examination by the NRC for an SRO license, whether or not the examination is taken. The Plant General Manager should have a recognized baccalaureate or higher degree in an engineering or scientific field generally associated with power production.

When one or more persons are designated as principal alternates for the Plant General Manager and the alternate person(s) meet nuclear plant experience and training requirements established for the Plant General Manager, the requirement of the Plant General Manager may be reduced, such that only one of their ten years of experience need to be nuclear power plant experience and they need not have training normally required for examination by the NRC for an SRO license.

If the Plant General Manager does not have the appropriate education credentials, then at least one of the designated principal alternate positions should have a recognized baccalaureate or higher degree in an engineering or scientific field generally associated with power production.

13.1.3.2 Operations Department

13.1.3.2.1 Operations Director

The Operations Director shall have a minimum of 8 years of responsible power plant experience of which a minimum of 3 years shall be nuclear power plant experience.

A maximum of 2 years of the remaining 5 years of power plant experience may be fulfilled by satisfactory completion of academic or related technical training on a one-for-one time basis. The Operations Crew Manager shall have qualifications similar to those of the Operations Director. The Operations Director or Operations Crew Manager shall hold an SRO license.

13.1.3.2.2 Shift Manager

The Shift Manager shall have a minimum of a high school diploma or equivalent and 4 years of responsible power plant experience of which a minimum of 1 year shall be nuclear power plant experience. At least 6 months of nuclear plant experience will be at CGS. A maximum of 2 years of power plant experience may be fulfilled by academic or related technical training on a one-for-one time basis. The Shift Manager shall hold an SRO license. For NRC license eligibility guidelines (experience, training, and education) for an SRO license, see NUREG-1021, section ES-202.

13.1.3.2.3 Control Room Supervisor

The Control Room Supervisor shall have a minimum of a high school diploma or equivalent and 4 years of responsible power plant experience, of which a minimum of 1 year shall be nuclear power plant experience. At least 6 months of nuclear plant experience will be at CGS. A maximum of 2 years of power plant experience may be fulfilled by academic or related technical training on a one-for-one time basis. The Control Room Supervisor shall hold an SRO license. For NRC license eligibility guidelines (experience, training, and education) for an SRO license, see NUREG-1021, section ES-202.

13.1.3.2.4 Shift Technical Advisor

The STA possesses a bachelor's degree in engineering or science with sufficient courses to provide a sound background for understanding the design and operation of a BWR power plant. The STA shall have a minimum of 2 years of power plant experience with at least 6 months of nuclear plant experience at CGS.

13.1.3.2.5 Shift Support Supervisor

The Shift Support Supervisor shall have a high school diploma or equivalent. The individual shall have 4 years of power plant experience of which 1 year shall be nuclear power plant experience. This position does not require an RO license.

13.1.3.2.6 Reactor Operator

The RO shall have a minimum of a high school diploma or equivalent and two years of power plant experience of which a minimum of 1 year shall be nuclear power plant experience. At least 6 months of the nuclear experience shall be at CGS unless the incumbent has an equal amount of nuclear experience acquired on a similar unit. The individual shall hold an RO license. For NRC license eligibility guidelines (experience, training, and education) for an RO license, see NUREG-1021, section ES-202.

13.1.3.2.7 Equipment Operator

Before assuming the full responsibilities of the position in the plant, the Equipment Operator shall have a minimum of a high school diploma or equivalent and shall have completed the Energy Northwest training program for Equipment Operators. This position does not require an RO license.

13.1.3.3 Engineering

13.1.3.3.1 Engineer in Charge

The "Engineer-in-Charge" described in Section 13.1.1.3 shall have a minimum of a Bachelor's Degree in Engineering or the Physical Sciences and a minimum of 8 years of related technical experience of which 3 years is professional level experience in nuclear services, nuclear plant operation, or nuclear engineering, and the necessary overall nuclear background to determine when to call consultants and contractors for dealing with complex problems beyond the scope of owner-organization expertise.

13.1.3.3.2 Engineering Managers

Engineering Managers shall have a minimum of 8 years of related technical experience of which 1 year should be nuclear power plant experience. A maximum of 4 years of the remaining 7 years may be fulfilled by satisfactory completion of academic training as defined in ANSI N18.1-1971. The Reactor Fuels Manager shall have a bachelor of science degree in engineering or physical sciences suitable to the nuclear power field and a minimum of 2 years of experience in areas such as reactor/core physics and measurements, heat transfer, and physics testing.

Engineering Managers appointed as members of the Plant Operations Committee must also meet the qualification requirements specified in the OQAPD.

13.1.3.3.3 Engineering Supervisors

The Engineering Supervisors shall have a minimum of 5 years of related technical experience of which 1 year shall be nuclear power plant experience. A maximum of 4 years of the required 5 years may be fulfilled by satisfactory completion of academic training. The Reactor Engineering/Fuel Design Supervisor(s) shall have a minimum of 2 years experience in areas such as reactor/core physics and measurements, heat transfer, and physics testing. A Bachelor of Science degree in engineering or physical sciences or the equivalent is required.

The individual(s) responsible for instrumentation and control shall have a minimum of 5 years experience in instrumentation and control, of which a minimum of 6 months shall be in nuclear instrumentation and control. A minimum of 2 of the 5 years of experience should be related

technical training. A maximum of 4 of the 5 years of experience may be fulfilled by related technical or academic training as defined by ANSI N18.1-1971.

13.1.3.3.4 Fire Protection Engineer

The qualified Fire Protection Engineer meets the qualifications of professional member in the Society of Fire Protection Engineers or is a registered Fire Protection Engineer.

13.1.3.4 Maintenance

13.1.3.4.1 Maintenance Director

The Maintenance Director shall have a minimum of 7 years of responsible power plant experience or applicable industrial experience, a minimum of 1 year of which shall be nuclear power plant experience. A maximum of 2 years of the remaining 6 years of power plant or industrial experience may be fulfilled by satisfactory completion of academic or related technical training on a one-for-one time basis. They further should have nondestructive testing familiarity, craft knowledge, and an understanding of electrical, pressure vessel, and piping codes.

13.1.3.4.2 Maintenance Supervisors

Maintenance Supervisors shall each have a high school diploma or equivalent and should have a minimum of 4 years experience in the craft or discipline that they supervise in accordance with ANSI 18.1, 1971. In cases where a supervisor does not have a minimum of 4 years of experience in the discipline of the craft being supervised, technical direction for the craft will be given by a qualified supervisor.

13.1.3.5 Chemistry and Radiological Services

13.1.3.5.1 Chemistry/Radiological Services Director

The Chemistry/Radiological Services Director shall, in accordance with ANSI N18.1-1971, have a minimum of 8 years in responsible positions, of which 1 year shall be nuclear power plant experience. A maximum of 4 years of the remaining seven years of experience should be fulfilled by satisfactory completion of academic training.

13.1.3.5.2 Deleted

13.1.3.5.3 Radiation Protection Manager

The Chemistry/Radiological Services Director functions as the Radiation Protection Manager and shall, at a minimum, meet the qualifications defined in Regulatory Guide 1.8,

Rev. 1-R (May 1977). This individual shall have a bachelor's degree or the equivalent in a science or engineering subject including some formal training in radiation protection. The Radiation Protection Manager shall have at least 5 years of professional experience in applied radiation protection. A master's degree may be considered equivalent to 1 year of professional experience and a doctor's degree may be considered equivalent to 2 years of professional experience where course work related to radiation protection is involved. At least 3 years of this professional experience shall be in applied radiation protection work in a nuclear facility dealing with radiological problems similar to those encountered in nuclear power stations, preferably in an actual nuclear power station. The Radiation Protection Manager is an assigned duty and not a defined position in the organization (see Section 12.5.1).

13.1.3.5.4 Radiological Services Supervisors

Radiological Services Supervisors shall, in accordance with ANSI 18.1-1971, have a high school diploma or equivalent and a minimum of 4 years of related experience.

13.1.3.5.5 Chemistry Supervisors

Chemistry Supervisors who are responsible for directing the actions of technicians shall, in accordance with ANSI N18.1-1971, have a high school diploma or equivalent and a minimum of 4 years related experience.

1.3.1.3.6 Deleted

13.1.3.7 Quality

See the OQAPD for a description of qualification requirements.

Table 13.1-1

Minimum Shift Crew Composition

Position Title[b]	Type of License	Minimum Number of Personnel per Position per Shift	
		Modes 1, 2, and 3[c]	Modes 4 and 5[c]
SM	SRO	1	1
CRS	SRO	1	None
RO	RO	2	1
EO	None	2	1
STA	None	1[d,e]	Note[f]
HP	None	1	1

[a] This table represents the minimum number of personnel required to fill any particular position. It does not provide a total staffing level for an operating shift. Additional staff for safe shutdown and fire brigade must also be satisfied.

Technical Specifications paragraph 5.3.2 was added in LAR 182 to clarify compliance with 10 CFR 55.53 requirements. Energy Northwest may take credit for more than the minimum number of watchstanders required by 10 CFR 50.54(m). However, fulfillment of 10 CFR 55.53(e) and (f) requirements of active performance of operator or senior operator functions requires that Energy Northwest implement administrative controls to assure functions and duties are divided and rotated in a manner which provides each watchstander meaningful and significant opportunity to maintain proficiency in the performance of the functions of an RO and/or SRO.

[b] Position title abbreviations are as follows:

SM Shift Manager with SRO on Columbia Generating Station
CRS Control Room Supervisor with SRO on Columbia Generating Station
RO Reactor Operator with RO or SRO on Columbia Generating Station
EO Equipment Operator
STA Shift Technical Advisor
HP Health Physics Technician

Table 13.1-1

Minimum Shift Crew Composition (Continued)

[c] Modes

1. Power operation
2. Startup
3. Hot shutdown
4. Cold shutdown
5. Refueling

[d] An STA qualified individual shall be on-shift in Modes 1, 2 and 3. The STA qualified individual may be a dedicated individual (licensed or non-licensed) or an individual filling a dual role position as the Control Room Supervisor, Shift Manager or Shift Support Supervisor.

[e] When the STA qualified individual is filling a dual role as the Control Room Supervisor or Shift Manager, another SRO is required to be on-shift to provide independent oversight and emergency response support to the Shift Manager.

[f] Refer to the Emergency Plan for emergency response staffing requirements in Modes 4, 5.

The shift crew composition may be one less than the minimum requirements for a period not to exceed 2 hr to accommodate unexpected absence of on-duty shift crew members provided immediate action is taken to restore the shift crew composition to within the minimum requirements. This provision does not permit any shift crew position to be unmanned on shift change due to an oncoming shift crewman being late or absent.

During any absence of the Shift Manager from the control room while the unit is in Operational Condition 1, 2, or 3, an Operations Department individual with a valid SRO license shall be designated to assume the control room command function. During any absence of the Shift Manager from the control room while the unit is in Operational Condition 4 or 5, an individual with a valid SRO license or RO license shall be designated to assume the control room command function.

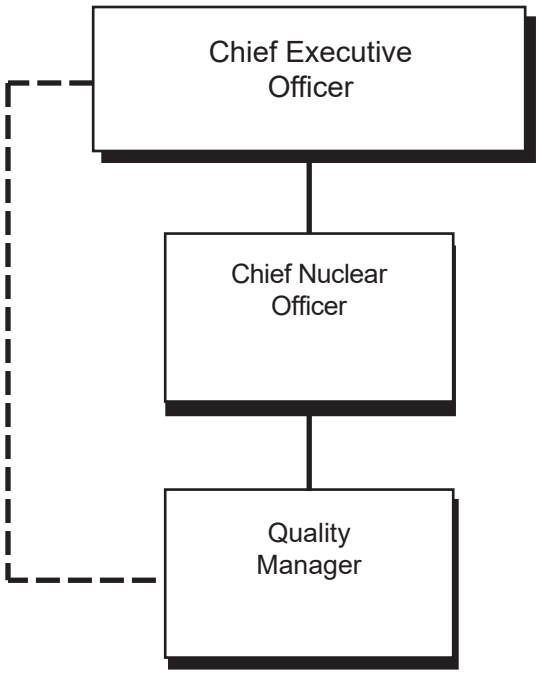

Legend:

Administrative and Functional Reporting

Communications Lines

Columbia Generating Station Final Safety Analysis Report	Energy Northwest Organization		
	Draw. No. 970187.02	Rev.	Figure 13.1-1

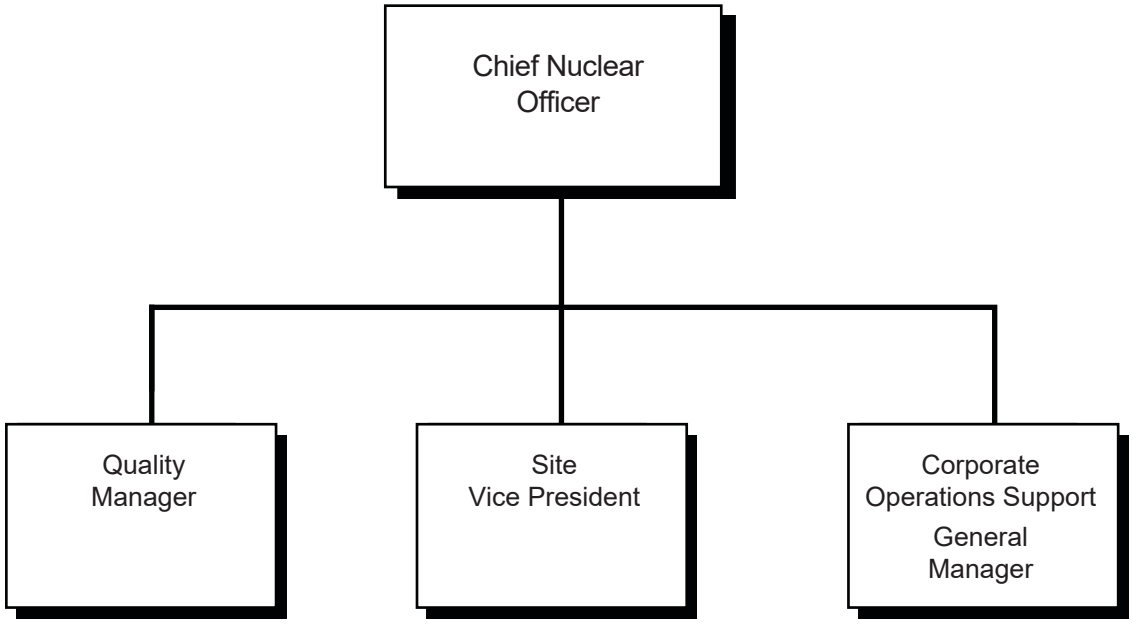

Columbia Generating Station Final Safety Analysis Report	Nuclear Generation Organization		
	Draw. No. 970187.03	Rev. 1	Figure 13.1-2

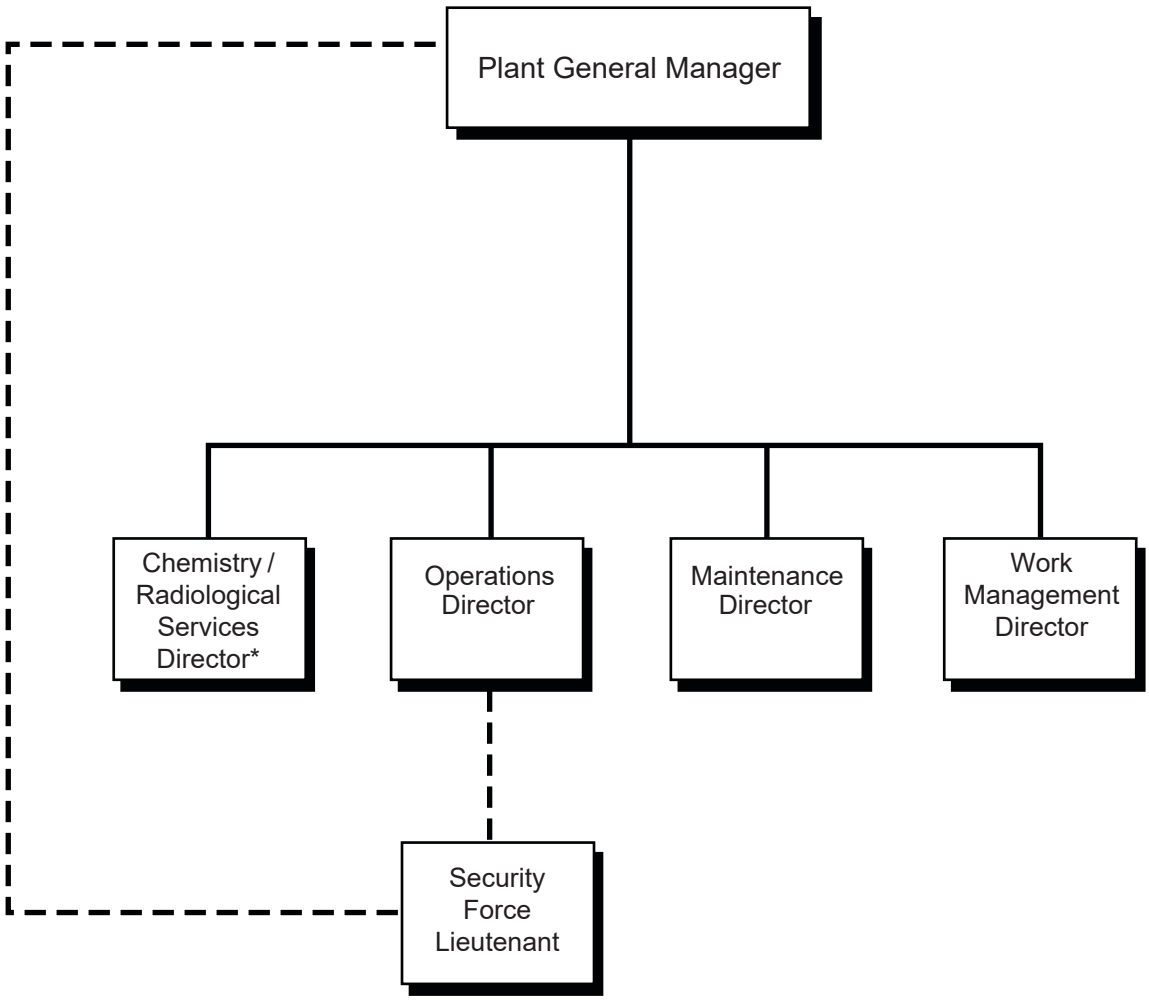

* Also fulfills Radiation Protection Manager function

Columbia Generating Station Final Safety Analysis Report	Plant General Manager Organization		
	Draw. No. 970187.41	Rev. 4	Figure 13.1-3

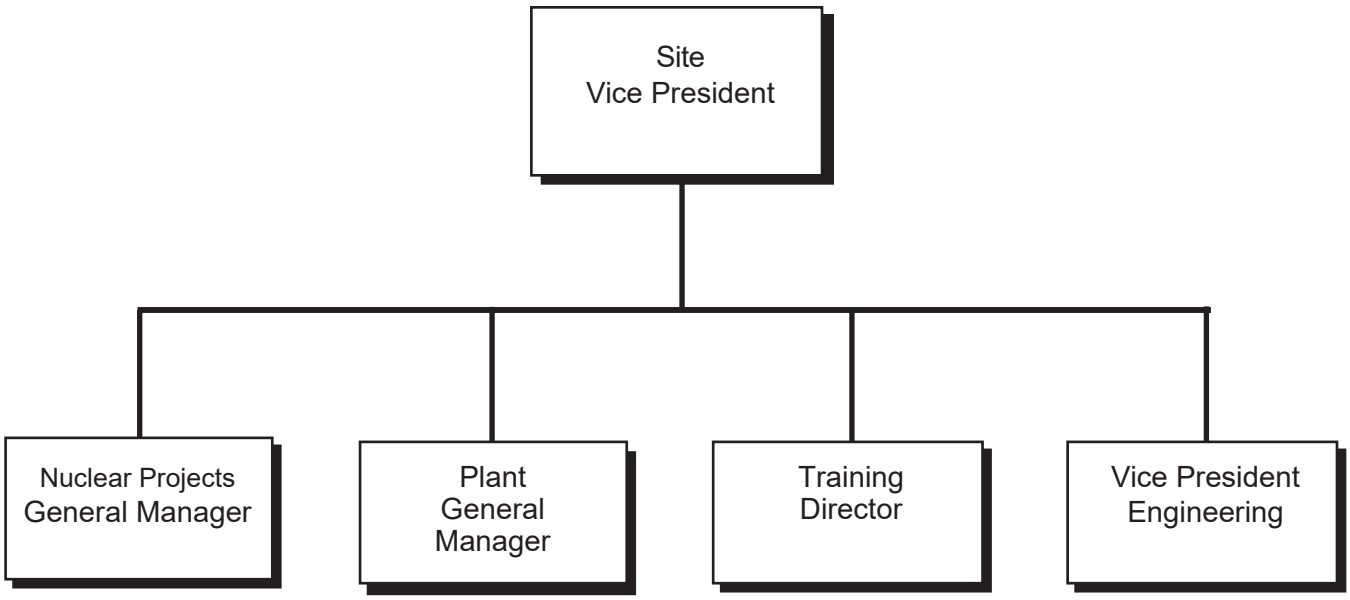

Columbia Generating Station Final Safety Analysis Report	Operational Support Organization		
	Draw. No. 970187.05	Rev. 6	Figure 13.1-4

DELETED

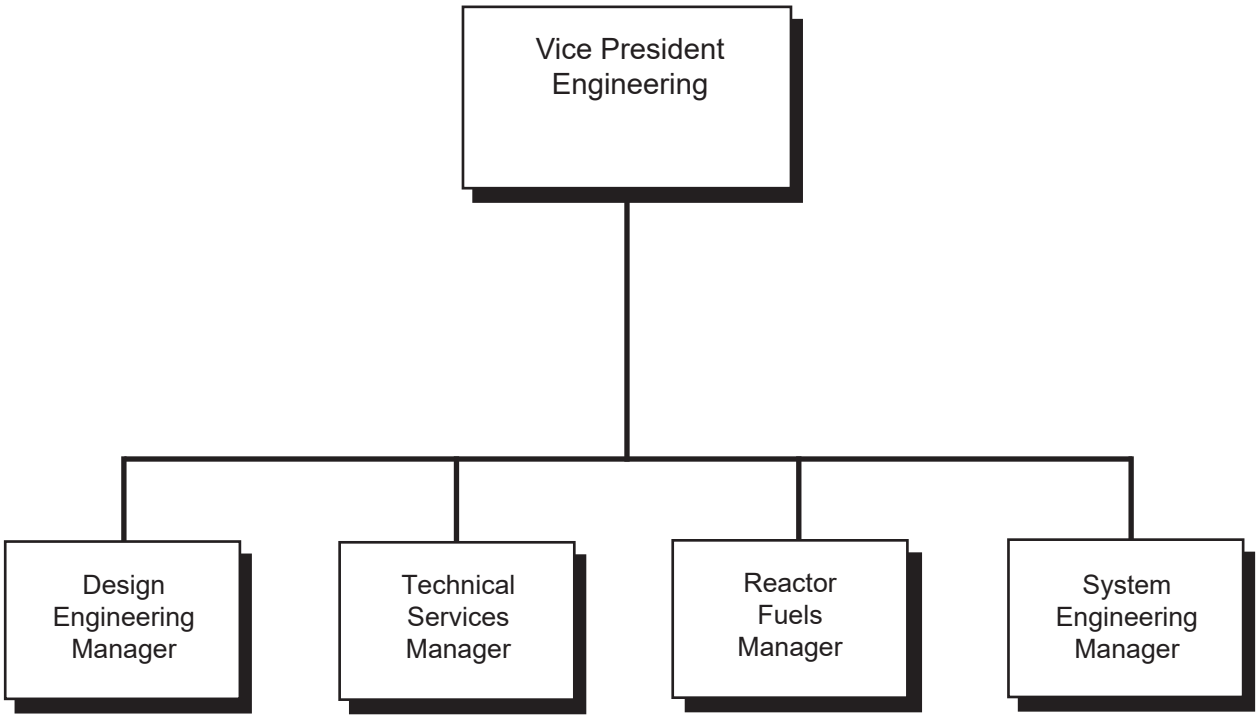

Columbia Generating Station Final Safety Analysis Report	Vice President Engineering Organization		
	Draw. No. 970187.07	Rev.	Figure 13.1-6

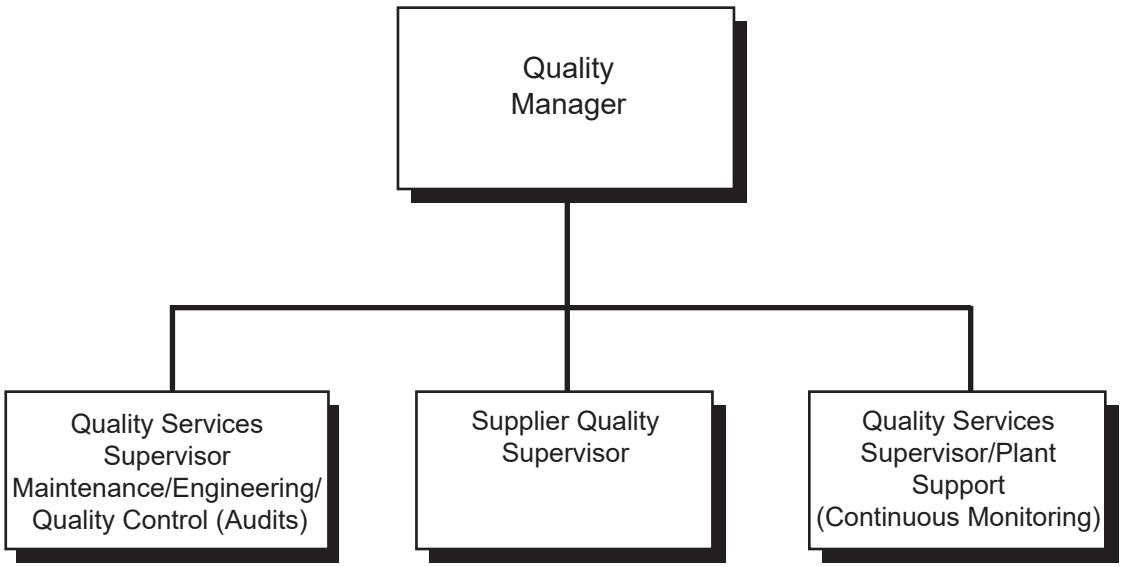

Columbia Generating Station Final Safety Analysis Report	Quality Organization		
	Draw. No. 970187.08	Rev. 1	Figure 13.1-7

DELETED

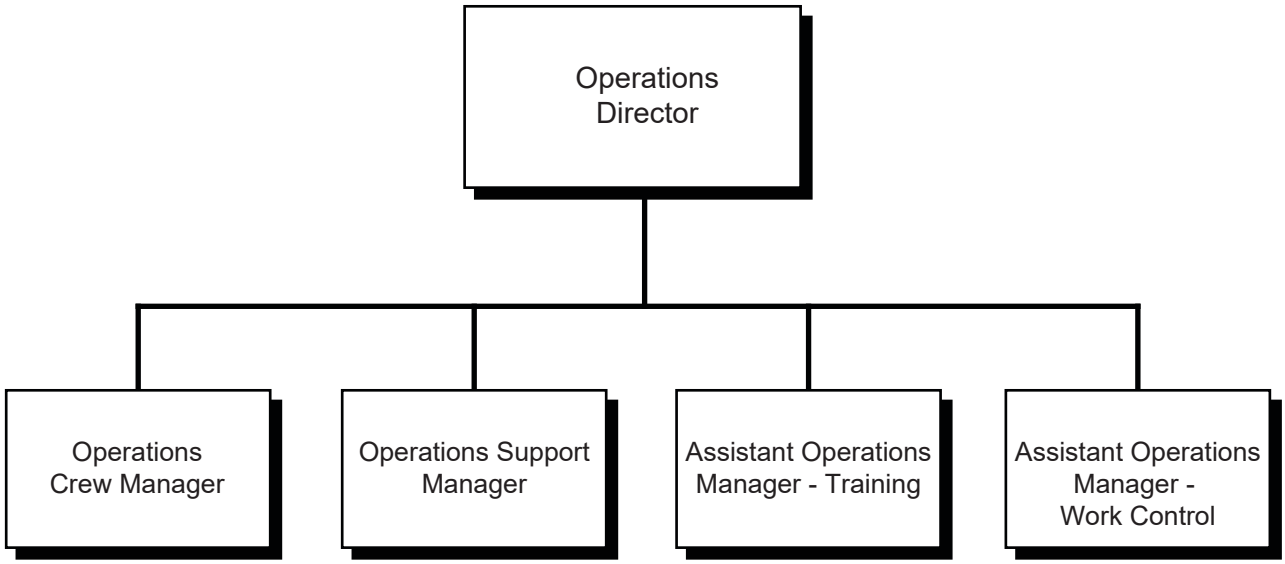
Operations Director
Operations Crew Manager
Operations Support Manager
Assistant Operations Manager - Training
Assistant Operations Manager - Work Control

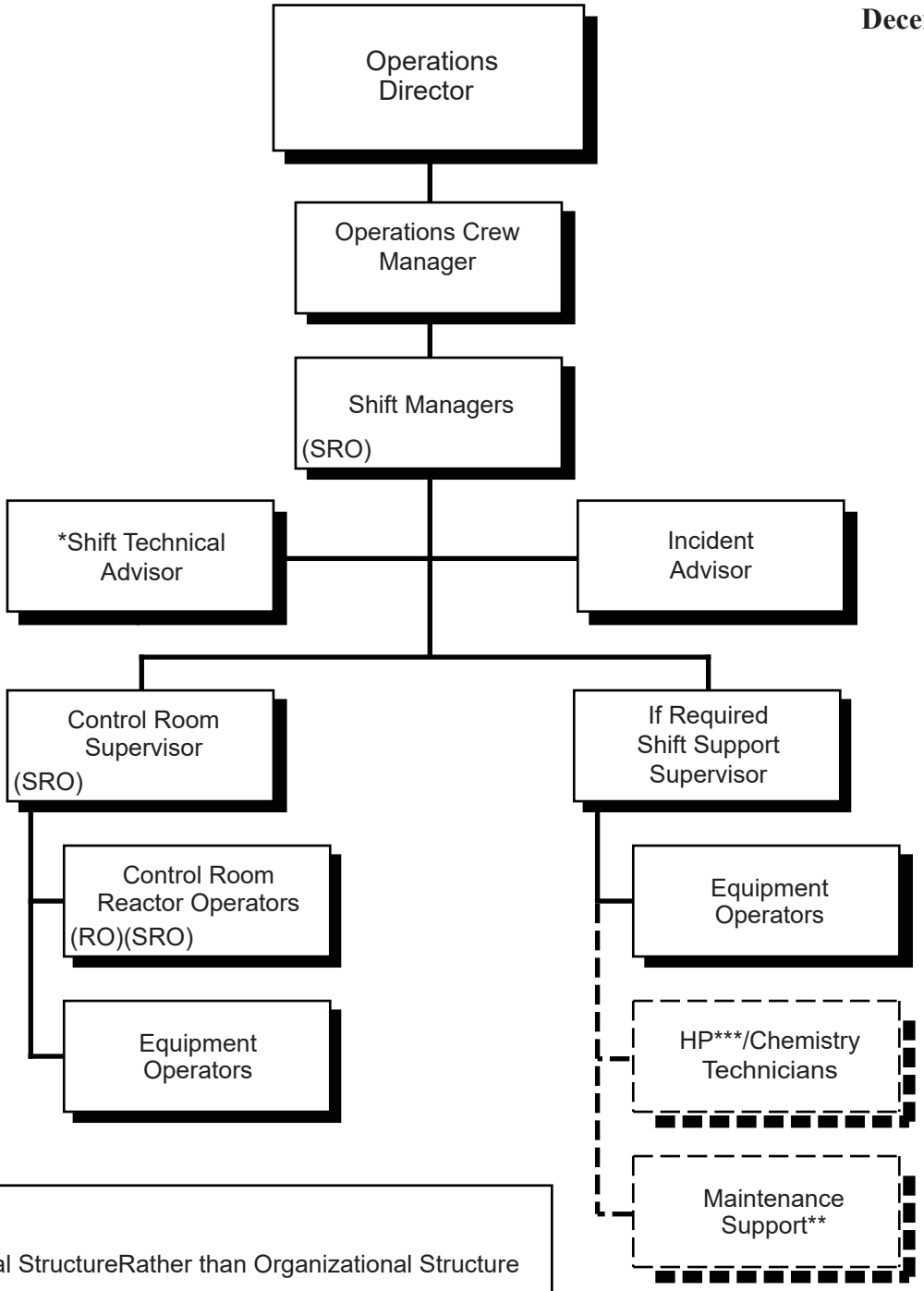

Legend:

Functional StructureRather than Organizational Structure

NRC License Required — Position (SRO)

* An assigned duty, not an organizational title

** To be provided from Maintenance Department as required

*** To be provided from HP/Chemistry Department as required

Columbia Generating Station Final Safety Analysis Report	**Operations Crew**		
	Draw. No. **970187.10**	Rev. **2**	Figure **13.1-10**

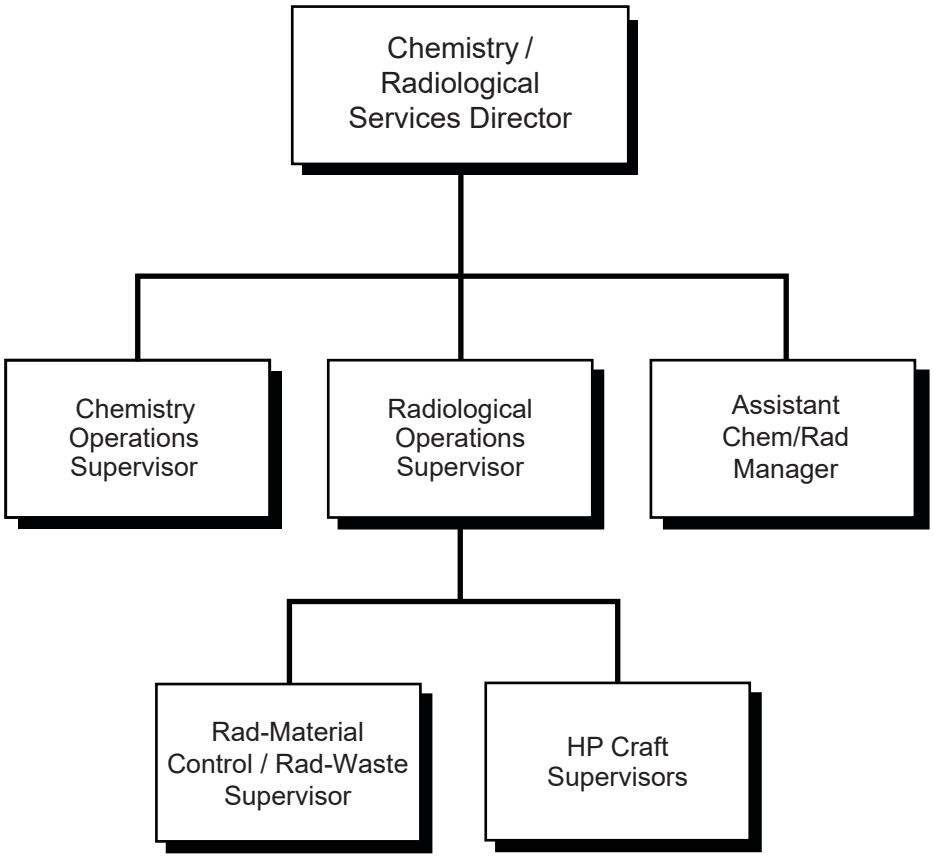

*Also fulfills Radiation Protection Manager function

Columbia Generating Station Final Safety Analysis Report	Radiological Services Organization		
	Draw. No. 970187.11	Rev. 6	Figure 13.1-11

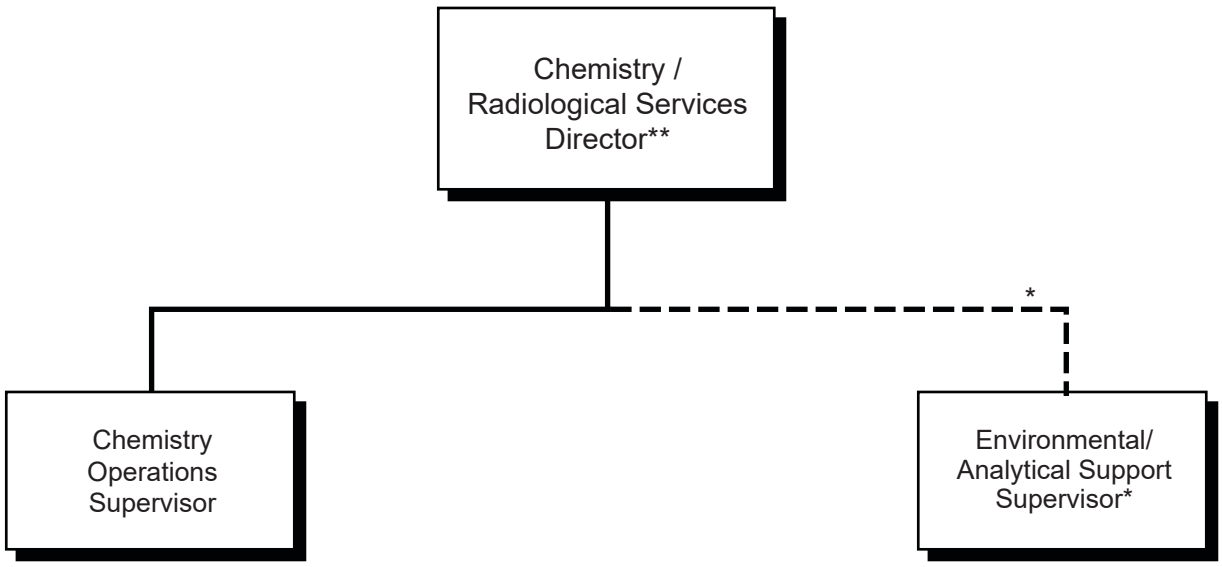

* Dashed line indicates a functional rather than an organizational structure.
** Also fulfills the Chemistry Manager function

Columbia Generating Station Final Safety Analysis Report	Chemistry Organization		
	Draw. No. 970187.12	Rev. 3	Figure 13.1-12

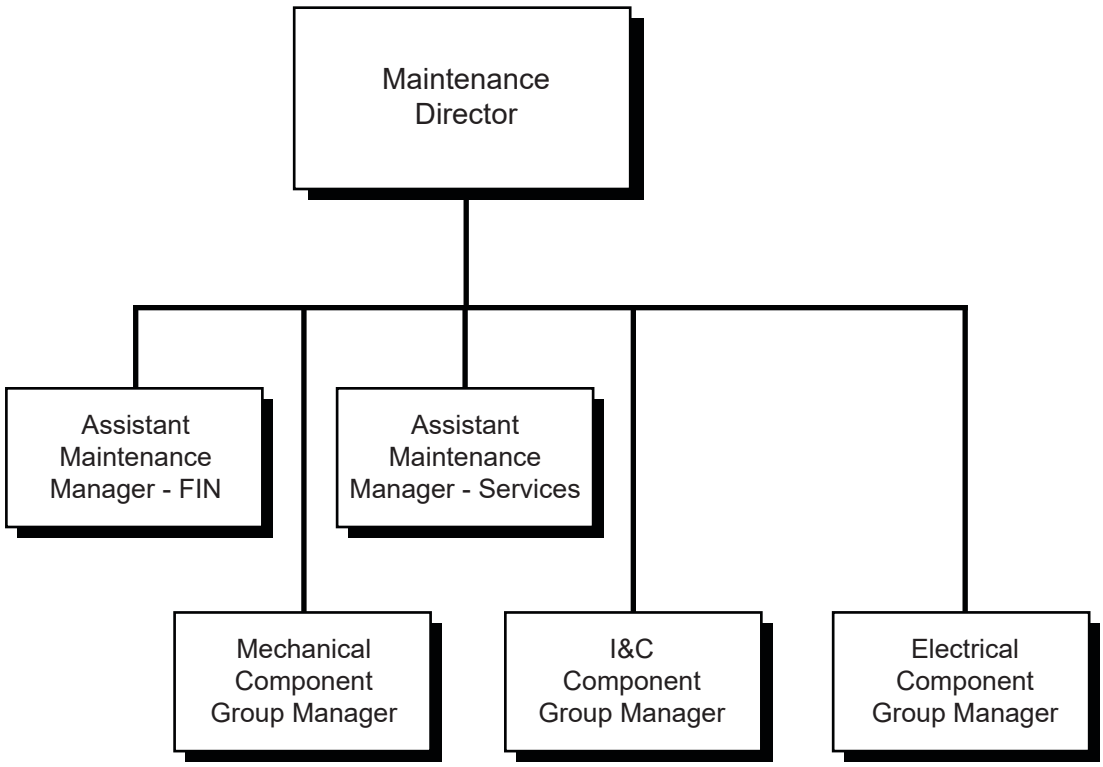

Columbia Generating Station Final Safety Analysis Report	Plant Maintenance Organization		
	Draw. No. 970187.13	Rev. 5	Figure 13.1-13

13.2 TRAINING

13.2.1 PLANT STAFF TRAINING PROGRAM

In accordance with applicable federal guidelines, the Columbia Generating Station (CGS) training program has been designed to provide plant personnel with sufficient knowledge, training, and experience to enable them to safely and efficiently operate and maintain the plant and to protect the health and safety of the public.

The overall training program has been developed and coordinated by Energy Northwest, utilizing courses and programs produced by the nuclear steam supply system (NSSS) supplier, training consultant organizations, the training staff, and other employees of Energy Northwest possessing expertise in related disciplines.

The training program will provide sufficient qualified reactor operators, senior reactor operators, equipment operators, shift technical advisors, maintenance, health physics, chemistry, and engineering support personnel to fully staff CGS.

Initial training programs provide qualified replacement personnel and continuing training programs provide ongoing training for all plant staff commensurate with their area of responsibility and knowledge level.

The Chief Nuclear Officer is responsible for overall conduct and administration of the CGS training program. The development and implementation of that program may be delegated to the Training Organization or other members of the plant staff.

a. General Employee Training - Program Description

All personnel granted unescorted access to the station will be trained in the following areas:

1. Appropriate plant security and emergency procedures,
2. General radiological protection,
3. Industrial safety,
4. Fire protection, and
5. Quality assurance program.

Written or oral exams will be required for selected classes to determine successful completion.

b. General Employee Training - Fire Protection Program

1. Plant employees

Employees receiving an unescorted security clearance will be provided training to include orientation to the fire protection plans, evacuation signals and procedures, and the procedure for reporting a fire.

2. Contractor personnel

Training will be provided to contractors as part of their access status--escorted or unescorted.

c. Security Personnel Training – Fire Protection Program

Training will be provided to plant security personnel that addresses

1. Entry procedures for offsite fire department,
2. Personnel control during emergency evacuation, and
3. Basic fire hazard recognition.

13.2.2 INITIAL AND CONTINUING TRAINING

13.2.2.1 Licensed Operators

13.2.2.1.1 Initial Training

Under the normal progression of an individual through the various levels of operator qualification, much of the material and experience will have been previously obtained, and hence, the licensed operator replacement training program will emphasize topics pertinent to the control room operator job function and requirements necessary for fulfilling the NRC operator licensing qualifications. Replacement for licensed operators normally come from the ranks of "qualified" nonlicensed operators; however, personnel from other departments or from outside the utility may be trained as control room operators if they meet all requirements for the position.

The CGS Operations Training Manager shall have the responsibility for establishing, supervising, and scheduling the initial licensed operator training program.

In accordance with 10 CFR 55.31(a)(4) the CGS licensed operator initial training program has been reviewed and approved by the Commission and was developed using a systems approach to training.

The licensed operator initial training program has been accredited by the National Academy for Nuclear Training. Accreditation is maintained in accordance with Institute of Nuclear Power Operation (INPO) Guidelines ACAD 02-001, "The Objectives and Criteria for Accreditation of Training in the Nuclear Power Industry," and ACAD 02-002, "The Process for Accreditation of Training in the Nuclear Power Industry."

13.2.2.1.2 Continuing Training

A requalification training program implementing the requirements of 10 CFR 55.59, will be conducted to maintain the knowledge level and operating proficiency of licensed personnel. The retraining program will be based on a 2-year cycle.

The CGS Operations Training Manager shall have the responsibility for establishing, supervising, and scheduling the retraining program.

In accordance with 10 CFR 55.59(c) the CGS licensed operator requalification training program has been reviewed and approved by the NRC and was developed using a systems approach to training.

The requalification program has been accredited by the National Academy for Nuclear Training. The accreditation is maintained in accordance with INPO Guidelines ACAD 02-001, "The Objectives and Criteria for Accreditation of Training in the Nuclear Power Industry," and ACAD 02-002, "The Process for Accreditation of Training in the Nuclear Power Industry."

The retraining and replacement program for the unit staff meets the requirements of Section 5.5 of ANSI/ANS N18.1-1971, Appendix A of 10 CFR Part 55, and the supplemental requirements specified in Sections A and C of Enclosure 1 of the March 28, 1980, NRC letter to all licensees, and includes familiarization with relevant industry operational experience.

13.2.2.2 Nonlicensed Operator Training

13.2.2.2.1 Initial Training

Normally replacements will be required to complete the following training prior to being placed into the equipment operator qualification sequence:

a. Basic fundamentals,
b. Basic boiling water reactor (BWR) systems,
c. Reactor plant equipment and component theory, and
d. Administrative procedures.

The training will emphasize topics pertinent to the equipment operator job function and requirements necessary for qualification.

13.2.2.2.2 Continuing Training Program

Continuing training of nonlicensed operators may be conducted in conjunction with the licensed operator requalification program. Nonlicensed operators shall be required to attend specific lecture topics that pertain to their job level requirements. At a minimum, nonlicensed operators shall participate in periodic reviews of systems and operating procedures for which continuous familiarization is important for safe and efficient operation of the plant. Specifically, the equipment operator retraining program consists of

a. Preplanned lecture series,
b. Update lecture series,
c. Normal/abnormal procedure review, and
d. Examinations/evaluations.

The CGS Operations Training Manager has the responsibility for establishing, supervising, and scheduling the equipment operator training program.

The equipment operator training program has been accredited by the National Academy for Nuclear Training. Accreditation is maintained in accordance with INPO Guidelines ACAD 02-001, "The Objectives and Criteria for Accreditation of Training in the Nuclear Power Industry," and ACAD 02-002, "The Process of Accreditation of Training in the Nuclear Power Industry."

13.2.2.3 Shift Technical Advisor Training

13.2.2.3.1 Initial Training

The initial shift technical advisor (STA) training program content will normally include training and qualification in the following subject areas:

a. Completion of the SRO replacement operator training program or equivalent
b. Plant transient/accident analysis, and
c. STA job specific training.

13.2.2.3.2 Continuing Training

Continuing training of the STAs is normally conducted in conjunction with the licensed operator requalification training program. The STAs shall be required to attend specific lecture topics that pertain to their job level requirements. At a minimum, STAs shall participate in periodic reviews of systems and operating procedures for which continuous

familiarization is important for safe and efficient operation of the plant. Specifically, the STA retraining program consists of

a. Preplanned lecture series,
b. Update lecture series,
c. Normal/abnormal procedure review, and
d. Examinations/evaluations.

The CGS Operations Training Manager has the responsibility for establishing, supervising, and scheduling the STA training program.

The STA training program has been accredited by the National Academy for Nuclear Training. Accreditation is maintained in accordance with INPO Guidelines ACAD 02-001, "The Objectives and Criteria for Accreditation of Training in the Nuclear Power Industry," and ACAD 02-002, "The Process for Accreditation of Training in the Nuclear Power Industry."

13.2.2.4 Other Plant Personnel (Maintenance, Health Physics, Chemistry)

13.2.2.4.1 Initial Training

Replacement personnel, when hired, will be given training commensurate with their job responsibilities as determined necessary by the respective Department Manager and the appropriate Training Supervisor after a review of past experience and training.

13.2.2.4.2 Continuing Training

Continuing training is conducted on a regular basis and consists of pertinent operating experience and designated requalification topics. The continuing training will be commensurate with their assigned job responsibilities as determined necessary by their respective Department Manager and Training Coordinator.

13.2.2.5 Fire Brigade

13.2.2.5.1 Initial and Continuing Training

Each assigned member of the Fire Brigade will complete initial and continuing Fire Brigade training courses to provide the knowledge and skills necessary to accomplish the expected fire fighting activities. The scope of this training will be described and implemented by plant procedures.

One assigned member will be designated as the Fire Brigade leader to direct the actual fire fighting forces. This individual will receive the training necessary to effectively carry out this function.

The Fire Brigade leader and two additional members will be knowledgeable of plant fire safe shutdown equipment.

a. Planned meetings

Regular planned meetings for each Fire Brigade member will be held each quarter to review changes in the program and other subjects, as necessary.

During these planned meetings, the initial training program content will be reviewed for all Fire Brigade members over a 2-year period.

b. Practice sessions

Practice sessions will be held for each Fire Brigade member annually on the proper methods of fighting the various types of fires that could occur in a nuclear power plant.

c. Drills

Planned drills will be conducted for practice in responding as a team to areas of the plant site where the Fire Brigade may be required to respond. Each Fire Brigade member will be required to participate in at least two drills per year. Each shift Fire Brigade will be required to participate in quarterly fire drills.

One drill for each shift Fire Brigade per year will be unannounced and one drill for each shift Fire Brigade per year will be on a back shift. The back shift and unannounced drill requirements can be satisfied concurrently for each shift.

13.2.2.5.2 Offsite Fire Department

The offsite fire department that supplements the Fire Brigade will attend familiarization training associated with the CGS plant layout, operational precautions, radiation protection, and special hazards associated with fires at a nuclear power plant. This offsite fire department will participate in at least one fire drill each year.

13.2.3 TRAINING PROGRAM EFFECTIVENESS

The effectiveness of the Training Program will be evaluated by the following methods:

a. Satisfactory job performance as determined by periodic line management evaluations and observations,

b. Satisfactory performance of plant personnel on various oral and or written examinations administered by Energy Northwest or NRC, and

c. Periodic reviews of instructors, programs, and training material as conducted by the Training Department.

13.2.4 PLANT TRAINING RECORDS

The Training Director maintains complete qualification records on each member of the plant staff.

All records necessary to support requests for NRC reactor operator and senior reactor operator licenses are included in these files. Records to be maintained are as follows:

a. Lecture series attendance,
b. Lecture examinations and answers by the licensees,
c. Annual examinations and answers by the licensees,
d. Simulator performance evaluation results,
e. Control Manipulations Tracking System Form, and
f. Additional training for deficiencies.

13.2.5 OTHER TRAINING DOCUMENTS

For compliance with other applicable documents see Sections 1.8 and 12.5.3.8.

13.3 EMERGENCY PLANNING

The detailed emergency plan is included as a separate volume in the Columbia Generating Station Emergency Plan.

13.4 REVIEW AND AUDIT

The following sections describe the conduct of reviews and audits of operating activities that are important to safety. The review and audit program is consistent with the requirements of ANSI N18.7-1976, "Administrative Controls and Quality Assurance for the Operational Phase of Nuclear Power Plants."

Periodic reviews of plant operations are performed by the plant operating staff. In addition, Energy Northwest uses a formal onsite committee (see Section 13.4.1) and an independent group (see Section 13.4.2) for review.

The Quality staff has formulated and executed an audit program for the plant activities as defined in the Operational Quality Assurance Program Description (OQAPD).

The organization for review and audit and its relationship to other organizations is shown in Figures 13.1-1, 13.1-2, and 13.1-7.

13.4.1 ONSITE REVIEW

Onsite reviews are consistent with Regulatory Guide 1.33 (see Section 1.8). The plant operating staff provides, as part of the normal duties of plant supervisory personnel, timely and continuing monitoring of operating activities to assist the Plant General Manager in keeping abreast of general plant conditions and to verify that the day-to-day operating activities are conducted safely and in accordance with applicable administrative controls. These continuing monitoring activities are an integral part of the routine supervisory function and are important to the safety of plant operation.

13.4.2 INDEPENDENT REVIEW

In accordance with the OQAPD, the Plant Operations Committee (POC) serves as a review and advisory organization to the Plant General Manager on all matters related to nuclear safety. The Senior Site ALARA Committee (SSAC) serves as a review and advisory organization to the Plant General Manager on radiological safety matters. A specific function of the POC is to implement an independent review program as it relates to all proposed Technical Specification changes, License Amendment Requests, and Emergency Plan changes.

Written administrative procedures describe the responsibility and authority of the POC and SSAC. The POC activities and review are described in the OQAPD. The results of POC and SSAC review activities are documented.

Additionally, in accordance with the OQAPD, the Quality organization is responsible for oversight of the POC and SSAC, which entails evaluating the effectiveness of POC and SSAC reviews, collectively, with regard to nuclear and radiological safety. The Quality manager reports to and advises the Chief Executive Officer on the adequacy and implementation of Energy Northwest nuclear and radiological safety policies and programs.

Documentation defining POC membership, responsibilities, authority, and method of operation is contained in a Site Wide Procedure. Significant organizational features and review responsibilities are also described in the OQAPD. Conclusions of the independent reviews are transmitted to the appropriate members of management.

Independent technical reviews are performed by Quality in accordance with the OQAPD.

The objectivity of Quality is maintained based on a charter and reporting relationship independent of plant line management, without precluding participation in plant activities and tasks.

13.4.3 AUDIT PROGRAM

A comprehensive program of audits is carried out to verify compliance to the OQAPD. These audits are performed by or under the direct cognizance of the Quality staff. Written reports of such audits are reviewed by the POC, Plant General Manager, and other management as appropriate. Timely resolution of any deficiencies noted during audits is required by those organizations having responsibility for the area audited. Details of those areas to be audited are described in the OQAPD.

13.5 PLANT PROCEDURES

The administrative controls and quality assurance program for plant operation are carried out in accordance with approved written procedures. All activities affecting nuclear safety are conducted by written and approved procedures of a type appropriate to the circumstances, and these activities are accomplished in accordance with these procedures.

13.5.1 ADMINISTRATIVE PROCEDURES

13.5.1.1 Conformance With Regulatory Guide 1.33, Revision 2

ANSI N18.7-1976 and Regulatory Guide 1.33 including Appendix A are followed in accordance with the Energy Northwest position discussed in the Operational Quality Assurance Program Description (OQAPD).

13.5.1.2 Preparation of Procedures

The Procedure Program provides the administrative controls necessary to prepare, review, and approve the procedures required for plant operating activities.

The Chief Nuclear Officer has the overall responsibility for the Procedure Program and its implementing procedures. The Plant General Manager is responsible for the procedures that are required by ANSI N18.7-1976 and Regulatory Guide 1.33 and Appendix A. The preparation and review of the procedures are the responsibility of various plant staff personnel. All procedures are approved according to the Procedure Program and the OQAPD.

13.5.1.3 Procedures

The Procedure Program for Administrative Procedures defines the responsibility, methods used, and procedural action required to help ensure that the plant will be managed in a safe and dependable manner.

Administrative Procedures establish rules and instructions pertaining to activities such as procedure preparation, records management, plant reporting requirements, plant personnel responsibilities and authorities, plant modification, corrective and preventive maintenance, clearance orders, temporary changes to approved procedures, reviews of plant documents, surveillance testing and inservice inspection, equipment control, and material control.

Administrative Procedures governing standing orders to shift operations include the reactor operator's authority and responsibilities; the senior reactor operator's authority and responsibilities; the logbook use and control; issuance and updating of special orders; and the plans for meeting the requirements of 10 CFR 50.54(i), (j), (k), (1), and (m). This includes a diagram of the control room that illustrates the area designated as "at the controls."

13.5.2 OPERATING AND MAINTENANCE PROCEDURES

13.5.2.1 Control Room Operating Procedures

Detailed procedures used by the control room operators ensure plant safety and reliability. These procedures are categorized and described as follows:

System Operating Procedures

The System Operating Procedures provide instructions pertinent to the various normal operating modes of startup, operation, and shutdown of each system or subsystem. Checkoff lists are included, where appropriate, with each procedure to delineate the proper equipment lineup that is required.

General Operating Procedures

General Operating Procedures provide the instructions for the integrated operation of plant systems during startup, shutdown, power operations, and power changes. Checkoff lists, as appropriate, are included to ensure that necessary prerequisites to integrated operation have been completed. Checklists may also be used to confirm completion of major steps in the proper sequence.

Abnormal Condition Procedures

Abnormal Condition Procedures specify operator actions for restoring selected equipment or systems to their normal controlled status on a failure or to restore normal operating conditions following a perturbation. These procedures are not emergency procedures but are written to aid the operator in determining if a true emergency exists.

Abnormal Condition Procedures also contain response instructions for annunciator alarms and for abnormal conditions within the major systems covered in System Operating Procedures. Each safety-related annunciator is addressed in a written procedure which contains (1) meaning of annunciator, (2) the source of the signal, (3) the immediate action that is to occur automatically, (4) immediate operator actions, and (5) subsequent operator actions. Those procedures that require the Immediate Operator Action steps to be memorized are given adequate identification.

Emergency Operating Procedures/Severe Accident Guidelines

Emergency Operating Procedures/Severe Accident Guidelines are provided to guide operations during potential emergencies. These procedures specify actions, including manipulation of

controls, to avoid further degradation of abnormal conditions or to reduce the consequences of an accident or hazardous condition that has already occurred.

13.5.2.2 Other Procedures

Other safety-related activities conducted in accordance with approved procedures are categorized and described as follows (radioactive waste system operating procedures are covered by System Operating Procedures and the other aspects of radioactive waste management are covered by Health Physics and Chemistry Procedures).

Fuel Handling and Refueling Activities Procedures

Fuel Handling and Refueling Activities Procedures provide instructions for fuel and core component accountability, new fuel handling, refueling operations, defective fuel handling, reactor core component handling, and irradiated fuel shipment.

Surveillance Procedures (both Operational Surveillance and Instrument and Electrical Surveillance)

Surveillance Procedures provide instructions for performing periodic tests to verify and document that safety-related structures, systems, and components continue to function properly to remain in a state of readiness to perform their intended safety functions. Surveillance Procedures cover systems operability tests, logic system functional tests, and instrument and/or electrical functional tests and calibrations for the various surveillance requirements listed in the Technical Specifications.

Operating and Test Procedures

Operating and Test Procedures provide instructions for performing special tests on both safety and non-safety-related systems and components. These procedures contain tests such as power ascension, turbine efficiency, system hydrostatic tests, and reactor steam quality.

Nuclear Performance Evaluation Procedures

The Nuclear Performance Evaluation Procedures provide instructions for Engineering and Operations in the performance of the following types of evaluations: core thermal power evaluations, core thermal-hydraulic evaluations, intermediate range monitor, local power range monitor, and average power range monitor calibration and criticality predictions.

Maintenance Programs and Procedures

Maintenance Procedures provide instructions for performance of maintenance on safety-related equipment or systems and selected non-safety-related equipment and systems. Maintenance procedures cover mechanical, electrical, instrument and control, coatings, and refueling activities.

Health Physics Procedures

Health Physics Procedures establish the administrative and technical controls for the Radiation Protection Program and the implementing procedures for accomplishing the program. Descriptions of the activities covered by these procedures are included in Chapter 12.

Chemistry Procedures

Chemistry Procedures establish the administrative and technical controls for water quality analysis. Chemical and radiochemical determination procedures and associated instrument operation and calibration procedures are provided.

Emergency Plan Implementing Procedures

Detailed procedures prescribe the appropriate course of action necessary to limit or mitigate the consequences for each classification of incidents described in the Emergency Plan. An index of the Emergency Plan Implementing Procedures is included in Appendix II to the Emergency Plan.

Security Programs Implementing Procedures

Detailed security procedures prescribe the course of action necessary for compliance with the policies of the Security Plan. The Security Plan and associated implementing procedures that contain safeguards information are withheld from public disclosure (see Section 13.6).

Fire Protection Procedures

Fire Protection Procedures provide instructions for performing tests, inspections, and scheduled maintenance on fire protection equipment and systems and actions required for degraded systems.

ODCM Implementing Procedures

The ODCM Implementing Procedures prescribe the action necessary to implement the requirements of the Offsite Dose Calculation Manual (ODCM), including effluent monitoring, instrument calibration, and reporting requirements.

Environmental Compliance Procedures

Environmental Compliance Procedures establish the administrative and technical controls for environmental compliance. These procedures provide instructions for the management of solid wastes, pollution prevention and waste minimization, chemical storage and use, and hazardous substance spills and cleanup.

13.6 INDUSTRIAL SECURITY

The Columbia Generating Station Physical Security Plan contains a description of the physical protection program for the facility as required by 10 CFR 50.54(p) and 10 CFR 73.55. The contents of this plan are safeguards information and are withheld from public disclosure pursuant to Section 2.790(a)(3) of 10 CFR Part 2.

Chapter 14

INITIAL TEST PROGRAM

TABLE OF CONTENTS

Section — Page

14.1 SPECIFIC INFORMATION INCLUDED IN PRELIMINARY SAFETY ANALYSIS REPORTS 14.1-1

14.2 SYSTEM LINEUP, PREOPERATIONAL, AND INITIAL STARTUP TEST PROGRAM *14.2-1*
14.2.1 SUMMARY OF TEST PROGRAM AND OBJECTIVES 14.2-1
14.2.1.1 Initial Test Program Objectives 14.2-1
14.2.1.2 Initial Test Program Summaries 14.2-1
14.2.1.3 Description of System Lineup Tests 14.2-2
14.2.1.4 Description of Preoperational Tests 14.2-3
14.2.1.5 Description of Startup Tests 14.2-3
14.2.2 ORGANIZATION AND STAFFING 14.2-4
14.2.2.1 General 14.2-4
14.2.2.2 Definitions 14.2-5
14.2.2.3 Test and Startup Program Organization and the System Lineup and Preoperational Test Program 14.2-6
14.2.2.3.1 General 14.2-6
14.2.2.3.2 Responsibilities of CGS Test and Startup Division 14.2-6
14.2.2.3.3 CGS Test and Startup Department Position Responsibilities 14.2-6
14.2.2.3.3.1 CGS Test and Startup Manager 14.2-6
14.2.2.3.3.2 CGS Test Group Manager 14.2-7
14.2.2.3.3.3 CGS Test Group Supervisor 14.2-7
14.2.2.3.3.4 CGS Test Engineers 14.2-8
14.2.2.4 Plant Operations Organization and the Power Ascension Test Program 14.2-8
14.2.2.5 Test Working Group 14.2-9
14.2.2.5.1 System Lineup and Preoperational Test Program 14.2-9
14.2.2.5.2 Membership and Responsibility of the Test Working Group 14.2-9
14.2.2.6 Plant Organization Functions and Responsibilities During All Testing and Plant Operations 14.2-10
14.2.2.7 Energy Northwest Support of the Test and Startup Program 14.2-10
14.2.2.7.1 Plant Organization 14.2-10
14.2.2.7.1.1 Support During Test and Startup Program Development 14.2-10
14.2.2.7.1.2 Support During Testing 14.2-11
14.2.2.7.2 CGS Program 14.2-11

Chapter 14

INITIAL TEST PROGRAM

TABLE OF CONTENTS (Continued)

Section — Page

14.2.2.7.3 Plant Quality Assurance 14.2-11
14.2.2.8 Architect-Engineer Support of the Test and Startup Program 14.2-11
14.2.2.9 General Electric Support of the Test and Startup Program 14.2-12
14.2.2.9.1 Staff Responsibilities 14.2-12
14.2.2.9.1.1 General Electric Operations Manager 14.2-12
14.2.2.9.1.2 General Electric Operations Superintendent 14.2-12
14.2.2.9.1.3 General Electric Shift Superintendents 14.2-12
14.2.2.9.1.4 General Electric Lead Engineer - Startup Test, Design, and Analysis 14.2-13
14.2.2.10 Qualifications of Personnel Supporting the Test and Startup Program 14.2-13
14.2.2.10.1 Test and Startup Program Department Personnel Qualifications 14.2-13
14.2.2.10.2 Plant Organization Personnel Qualifications 14.2-14
14.2.3 TEST PROCEDURES 14.2-14
14.2.3.1 Development of Test Procedures 14.2-14
14.2.3.1.1 Incorporation of Plant Procedures 14.2-15
14.2.3.1.2 Format of Test Procedures 14.2-15
14.2.3.1.2.1 Preoperational Test Phase 14.2-15
14.2.3.1.2.2 Power Ascension Test Phase 14.2-17
14.2.3.2 Review of Test Procedures 14.2-17
14.2.3.3 Approval of Test Procedures 14.2-18
14.2.4 CONDUCT OF TEST PROGRAM 14.2-18
14.2.4.1 Administrative Procedures for Preoperational Testing 14.2-18
14.2.4.1.1 Test Performance Authorization 14.2-18
14.2.4.1.2 Preoperational Test Prerequisites 14.2-19
14.2.4.1.3 Conduct of Preoperational Testing 14.2-19
14.2.4.1.4 Deficiency Reporting 14.2-20
14.2.4.1.5 Equipment Maintenance and Modifications During Preoperational Testing 14.2-20
14.2.4.1.6 Preoperational Test Summary 14.2-21
14.2.4.1.7 Evaluation of Preoperational Test Data 14.2-21
14.2.4.1.8 Preoperational Test Records 14.2-21
14.2.4.2 Administrative Procedures for Power Ascension Testing 14.2-21
14.2.4.2.1 Plant Operation During Power Ascension Testing 14.2-21
14.2.4.2.2 Power Ascension Test Scheduling and Sequencing 14.2-22

Chapter 14

INITIAL TEST PROGRAM

TABLE OF CONTENTS (Continued)

Section — Page

14.2.4.2.3 Power Ascension Test Performance 14.2-22
14.2.4.3 Control of Test Prerequisites 14.2-23
14.2.4.4 Modification of Test Procedures During Testing 14.2-23
14.2.4.4.1 System Lineup and Preoperational Test Phase 14.2-23
14.2.4.4.2 Power Ascension Test Phase 14.2-24
14.2.5 REVIEW, EVALUATION, AND APPROVAL OF TEST RESULTS 14.2-24
14.2.5.1 Control of Test Results Review 14.2-24
14.2.5.2 Design Organization Participation in Problem Resolution 14.2-24
14.2.5.3 Results Analysis Prerequisites to Continuation of Startup Testing 14.2-25
14.2.6 TEST RECORDS 14.2-25
14.2.6.1 System Lineup and Preoperational Test Phase 14.2-25
14.2.6.1.1 General 14.2-25
14.2.6.1.2 Test Record Responsibilities 14.2-26
14.2.6.1.3 Types of Documents and Records Requiring Test Record File Retention 14.2-26
14.2.6.2 Power Ascension Test Phase 14.2-26
14.2.7 CONFORMANCE OF TEST PROGRAMS WITH REGULATORY GUIDES 14.2-26
14.2.7.1 Conformance with Regulatory Guide 1.68 ..... 14.2-26
14.2.7.2 Exceptions to Regulatory Guide 1.68 ..... 14.2-27
14.2.7.3 Conformance With or Exceptions to Regulatory Guides Other Than 1.68 ..... 14.2-27
14.2.8 UTILIZATION OF REACTOR OPERATING AND TESTING EXPERIENCES IN THE DEVELOPMENT OF THE TEST PROGRAM 14.2-27
14.2.9 TRIAL USE OF PLANT OPERATING AND EMERGENCY PROCEDURES 14.2-28
14.2.10 INITIAL FUEL LOADING AND INITIAL CRITICALITY 14.2-28
14.2.10.1 Fuel Loading and Shutdown Power Level Tests 14.2-28
14.2.10.1.1 Loss of Power Demonstration - Standby Core Cooling Required 14.2-28
14.2.10.1.2 Cold Functional Testing 14.2-28
14.2.10.1.3 Routine Surveillance Testing 14.2-29
14.2.10.1.4 Master Startup Checklist 14.2-29
14.2.10.1.5 Initial Fuel Loading 14.2-29
14.2.10.1.6 Zero Power Level Tests 14.2-30
14.2.10.2 Initial Heatup to Rated Temperature and Pressure 14.2-30

Chapter 14

INITIAL TEST PROGRAM

TABLE OF CONTENTS (Continued)

Section — Page

14.2.10.3 Power Testing From 25% to 100% of Rated Output 14.2-30
14.2.11 TEST PROGRAM SCHEDULE 14.2-32
14.2.12 INDIVIDUAL TEST DESCRIPTIONS 14.2-32
14.2.12.1 Preoperational Test Procedures 14.2-32
14.2.12.1.1 Reactor Feedwater System Preoperational Test 14.2-33
14.2.12.1.2 Condensate System Preoperational Test 14.2-33
14.2.12.1.3 Fire Protection System Preoperational Test 14.2-34
14.2.12.1.4 Reactor Water Cleanup System Preoperational Test 14.2-35
14.2.12.1.5 Standby Liquid Control System Preoperational Test 14.2-35
14.2.12.1.6 Nuclear Boiler System Preoperational Test 14.2-36
14.2.12.1.7 Residual Heat Removal System Preoperational Test 14.2-37
14.2.12.1.8 Reactor Core Isolation Cooling System Preoperational Test 14.2-37
14.2.12.1.9 Reactor Recirculation System and Control Preoperational Test 14.2-38
14.2.12.1.10 Reactor Manual Control System Preoperational Test 14.2-39
14.2.12.1.11 Control Rod Drive Hydraulic System Preoperational Test 14.2-39
14.2.12.1.12 Fuel Handling and Vessel Servicing Equipment Preoperational Test 14.2-40
14.2.12.1.13 Low-Pressure Core Spray System Preoperational Test 14.2-41
14.2.12.1.14 High-Pressure Core Spray System Preoperational Test 14.2-42
14.2.12.1.15 Fuel Pool Cooling and Cleanup System Preoperational Test 14.2-43
14.2.12.1.16 Leak Detection System Preoperational Test 14.2-43
14.2.12.1.17 Liquid and Solid Radwaste System Preoperational Test 14.2-44
14.2.12.1.18 Reactor Protection System Preoperational Test 14.2-45
14.2.12.1.19 Neutron Monitoring System Preoperational Test 14.2-46
14.2.12.1.20 Traversing In-Core Probe System Preoperational Test 14.2-47
14.2.12.1.21 Rod Worth Minimizer System Preoperational Test 14.2-47
14.2.12.1.22 Process Radiation Monitoring System Preoperational Test 14.2-48
14.2.12.1.23 Area Radiation Monitoring System Preoperational Test 14.2-49
14.2.12.1.24 Process Computer Interface System Preoperational Test 14.2-50
14.2.12.1.25 Rod Sequence Control System Preoperational Test 14.2-50
14.2.12.1.26 Remote Shutdown Preoperational Test 14.2-51
14.2.12.1.27 Offgas System Preoperational Test 14.2-52
14.2.12.1.28 Environs Radiation Monitoring Preoperational Test 14.2-53
14.2.12.1.29 Main Steam System Preoperational Test 14.2-53

Chapter 14

INITIAL TEST PROGRAM

TABLE OF CONTENTS (Continued)

Section Page

14.2.12.1.30 Radwaste Building Heating, Ventilating, and Air Conditioning System Preoperational Test..... 14.2-54
14.2.12.1.31 Closed Cooling Water System Preoperational Test..... 14.2-55
14.2.12.1.32 Primary Containment Atmospheric Control System Preoperational Test (SYSTEM DEACTIVATED) 14.2-55
14.2.12.1.33 Primary Containment Cooling System Preoperational Test..... 14.2-56
14.2.12.1.34 Primary Containment Instrument Air Preoperational Test 14.2-57
14.2.12.1.35 Primary Containment Atmospheric Monitoring System Preoperational Test..... 14.2-57
14.2.12.1.36 Standby Gas Treatment System Preoperational Test 14.2-58
14.2.12.1.37 Loss of Power and Safety Testing Preoperational Test 14.2-59
14.2.12.1.38 Instrument Power Preoperational Test 14.2-61
14.2.12.1.39 Emergency Lighting System Preoperational Test 14.2-61
14.2.12.1.40 Standby Alternating Current Power System Preoperational Test 14.2-62
14.2.12.1.41 250-V Direct Current Power System Preoperational Test..... 14.2-63
14.2.12.1.42 125-V Direct Current Power System Preoperational Test..... 14.2-64
14.2.12.1.43 24-V Direct Current Power System Preoperational Test 14.2-64
14.2.12.1.44 Plant Service Water System Preoperational Test 14.2-65
14.2.12.1.45 Standby Service Water System Preoperational Test 14.2-66
14.2.12.1.46 Plant Communications System Preoperational Test 14.2-67
14.2.12.1.47 Reactor Building Emergency Cooling System Preoperational Test 14.2-67
14.2.12.1.48 Control, Cable, and Critical Switchgear Rooms Heating, Ventilating and Air Conditioning System Preoperational Test 14.2-68
14.2.12.1.49 Standby Service Water Pump House Heating and Ventilating System Preoperational Test..... 14.2-68
14.2.12.1.50 Reactor Building Crane Preoperational Test 14.2-69
14.2.12.1.51 Primary Containment Integrated Leak Rate Preoperational Test 14.2-70
14.2.12.1.52 Secondary Containment Integrated Leak Rate Preoperational Test 14.2-71
14.2.12.1.53 Diesel Generator Building Heating and Ventilating System Preoperational Test..... 14.2-71
14.2.12.1.54 Seismic Monitoring System Preoperational Test 14.2-72
14.2.12.2 General Discussion of Startup Tests 14.2-72

Chapter 14

INITIAL TEST PROGRAM

TABLE OF CONTENTS (Continued)

Section — Page

14.2.12.3 Startup Test Procedures 14.2-73
14.2.12.3.1 Test Number 1 - Chemical and Radiochemical 14.2-73
14.2.12.3.1.1 Purpose 14.2-73
14.2.12.3.1.2 Prerequisites 14.2-73
14.2.12.3.1.3 Description 14.2-73
14.2.12.3.1.4 Criteria 14.2-74
14.2.12.3.2 Test Number 2 - Radiation Measurements 14.2-74
14.2.12.3.2.1 Purpose 14.2-74
14.2.12.3.2.2 Prerequisites 14.2-74
14.2.12.3.2.3 Description 14.2-74
14.2.12.3.2.4 Criteria 14.2-75
14.2.12.3.3 Test Number 3 - Fuel Loading 14.2-75
14.2.12.3.3.1 Purpose 14.2-75
14.2.12.3.3.2 Prerequisites 14.2-75
14.2.12.3.3.3 Description 14.2-76
14.2.12.3.3.4 Criteria 14.2-76
14.2.12.3.4 Test Number 4 - Full Core Shutdown Margin 14.2-76
14.2.12.3.4.1 Purpose 14.2-76
14.2.12.3.4.2 Prerequisites 14.2-76
14.2.12.3.4.3 Description 14.2-77
14.2.12.3.4.4 Criteria 14.2-77
14.2.12.3.5 Test Number 5 - Control Rod Drive System 14.2-77
14.2.12.3.5.1 Purpose 14.2-77
14.2.12.3.5.2 Prerequisites 14.2-77
14.2.12.3.5.3 Description 14.2-78
14.2.12.3.5.4 Criteria 14.2-79
14.2.12.3.6 Test Number 6 - Source Range Monitor Performance and Control Rod Sequence 14.2-80
14.2.12.3.6.1 Purpose 14.2-80
14.2.12.3.6.2 Prerequisites 14.2-80
14.2.12.3.6.3 Description 14.2-80
14.2.12.3.6.4 Criteria 14.2-80
14.2.12.3.7 Test Number 7 ..... 14.2-81
14.2.12.3.8 Test Number 8 ..... 14.2-81
14.2.12.3.9 Test Number 9 ..... 14.2-81

Chapter 14

INITIAL TEST PROGRAM

TABLE OF CONTENTS (Continued)

Section — Page

14.2.12.3.10 Test Number 10 - Intermediate Range Monitor System Performance 14.2-81
14.2.12.3.10.1 Purpose 14.2-81
14.2.12.3.10.2 Prerequisites 14.2-81
14.2.12.3.10.3 Description 14.2-81
14.2.12.3.10.4 Criteria 14.2-81
14.2.12.3.11 Test Number 11 - Local Power Range Monitor Calibration 14.2-82
14.2.12.3.11.1 Purpose 14.2-82
14.2.12.3.11.2 Prerequisites 14.2-82
14.2.12.3.11.3 Description 14.2-82
14.2.12.3.11.4 Criteria 14.2-82
14.2.12.3.12 Test Number 12 - Average Power Range Monitor Calibration 14.2-82
14.2.12.3.12.1 Purpose 14.2-82
14.2.12.3.12.2 Prerequisites 14.2-82
14.2.12.3.12.3 Description 14.2-82
14.2.12.3.12.4 Criteria 14.2-83
14.2.12.3.13 Test Number 13 - Process Computer 14.2-83
14.2.12.3.13.1 Purpose 14.2-83
14.2.12.3.13.2 Prerequisites 14.2-83
14.2.12.3.13.3 Description 14.2-83
14.2.12.3.13.4 Criteria 14.2-84
14.2.12.3.14 Test Number 14 - Reactor Core Isolation Cooling System 14.2-85
14.2.12.3.14.1 Purpose 14.2-85
14.2.12.3.14.2 Prerequisites 14.2-85
14.2.12.3.14.3 Description 14.2-85
14.2.12.3.14.4 Criteria 14.2-86
14.2.12.3.15 Test Number 15 ..... 14.2-86
14.2.12.3.16 Test Numbers 16A and 16B 14.2-86
14.2.12.3.16.1 Test Number 16A - Selected Process Temperatures 14.2-86
14.2.12.3.16.1.1 Purpose 14.2-86
14.2.12.3.16.1.2 Prerequisites 14.2-87
14.2.12.3.16.1.3 Description 14.2-87
14.2.12.3.16.1.4 Criteria 14.2-87

Chapter 14

INITIAL TEST PROGRAM

TABLE OF CONTENTS (Continued)

Section — Page

14.2.12.3.16.2 Test Number 16B - Water Level Reference Leg Temperature Measurement 14.2-88
14.2.12.3.16.2.1 Purpose 14.2-88
14.2.12.3.16.2.2 Prerequisites 14.2-88
14.2.12.3.16.2.3 Description 14.2-88
14.2.12.3.16.2.4 Criteria 14.2-89
14.2.12.3.17 Test Number 17 - System Expansion 14.2-89
14.2.12.3.17.1 Purpose 14.2-89
14.2.12.3.17.2 Prerequisites 14.2-89
14.2.12.3.17.3 Description 14.2-89
14.2.12.3.17.4 Criteria 14.2-92
14.2.12.3.18 Test Number 18 - Core Power Distribution 14.2-92
14.2.12.3.18.1 Purpose 14.2-92
14.2.12.3.18.2 Prerequisites 14.2-92
14.2.12.3.18.3 Description 14.2-92
14.2.12.3.18.4 Criteria 14.2-93
14.2.12.3.19 Test Number 19 - Core Performance 14.2-93
14.2.12.3.19.1 Purpose 14.2-93
14.2.12.3.19.2 Prerequisites 14.2-93
14.2.12.3.19.3 Description 14.2-94
14.2.12.3.19.4 Criteria 14.2-94
14.2.12.3.20 Test Number 20 - Steam Production 14.2-94
14.2.12.3.20.1 Purpose 14.2-94
14.2.12.3.20.2 Prerequisites 14.2-95
14.2.12.3.20.3 Description 14.2-95
14.2.12.3.20.4 Criteria 14.2-95
14.2.12.3.21 Test Number 21 - Core Power-Void Mode 14.2-96
14.2.12.3.21.1 Purpose 14.2-96
14.2.12.3.21.2 Prerequisites 14.2-96
14.2.12.3.21.3 Description 14.2-96
14.2.12.3.21.4 Criteria 14.2-96
14.2.12.3.22 Test Number 22 - Pressure Regulator 14.2-96
14.2.12.3.22.1 Purpose 14.2-96
14.2.12.3.22.2 Prerequisites 14.2-96
14.2.12.3.22.3 Description 14.2-97

Chapter 14

INITIAL TEST PROGRAM

TABLE OF CONTENTS (Continued)

Section — Page

14.2.12.3.22.4 Criteria 14.2-97
14.2.12.3.23 Test Number 23 - Feedwater System 14.2-98
14.2.12.3.23.1 23A - Water Level Setpoint and Manual Flow Changes 14.2-98
14.2.12.3.23.1.1 Purpose 14.2-98
14.2.12.3.23.1.2 Prerequisites 14.2-98
14.2.12.3.23.1.3 Description 14.2-98
14.2.12.3.23.1.4 Criteria 14.2-98
14.2.12.3.23.2 23B - Loss of Feedwater Heating 14.2-100
14.2.12.3.23.2.1 Purpose 14.2-100
14.2.12.3.23.2.2 Prerequisites 14.2-100
14.2.12.3.23.2.3 Description 14.2-100
14.2.12.3.23.2.4 Criteria 14.2-100
14.2.12.3.23.3 22C - Feedwater Pump Trip 14.2-101
14.2.12.3.23.3.1 Purpose 14.2-101
14.2.12.3.23.3.2 Prerequisites 14.2-101
14.2.12.3.23.3.3 Description 14.2-101
14.2.12.3.23.3.4 Criteria 14.2-101
14.2.12.3.23.4 23D - Maximum Feedwater Runout Capability 14.2-101
14.2.12.3.23.4.1 Purpose 14.2-101
14.2.12.3.23.4.2 Prerequisites 14.2-101
14.2.12.3.23.4.3 Description 14.2-101
14.2.12.3.23.4.4 Criteria 14.2-102
14.2.12.3.24 Test Number 24 - Turbine Valve Surveillance 14.2-103
14.2.12.3.24.1 Purpose 14.2-103
14.2.12.3.24.2 Prerequisites 14.2-103
14.2.12.3.24.3 Description 14.2-103
14.2.12.3.24.4 Criteria 14.2-103
14.2.12.3.25 Test Number 25 - Main Steam Isolation Valves 14.2-104
14.2.12.3.25.1 25A - Main Steam Isolation Valve Function Tests 14.2-104
14.2.12.3.25.1.1 Purpose 14.2-104
14.2.12.3.25.1.2 Prerequisites 14.2-104
14.2.12.3.25.1.3 Description 14.2-104
14.2.12.3.25.1.4 Criteria 14.2-104
14.2.12.3.25.2 25B - Full Reactor Isolation 14.2-105
14.2.12.3.25.2.1 Purpose 14.2-105

Chapter 14

INITIAL TEST PROGRAM

TABLE OF CONTENTS (Continued)

Section Page

14.2.12.3.25.2.2 Prerequisites 14.2-105
14.2.12.3.25.2.3 Description 14.2-105
14.2.12.3.25.2.4 Criteria 14.2-105
14.2.12.3.26 Test Number 26 - Relief Valves 14.2-106
14.2.12.3.26.1 Purpose 14.2-106
14.2.12.3.26.2 Prerequisites 14.2-106
14.2.12.3.26.3 Description 14.2-106
14.2.12.3.26.4 Criteria 14.2-106
14.2.12.3.27 Test Number 27 - Turbine Trip and Generator Load Rejection 14.2-107
14.2.12.3.27.1 Purpose 14.2-107
14.2.12.3.27.2 Prerequisites 14.2-107
14.2.12.3.27.3 Description 14.2-107
14.2.12.3.27.4 Criteria 14.2-108
14.2.12.3.28 Test Number 28 - Shutdown From Outside the Main Control Room 14.2-109
14.2.12.3.28.1 Purpose 14.2-109
14.2.12.3.28.2 Prerequisites 14.2-110
14.2.12.3.28.3 Description 14.2-110
14.2.12.3.28.4 Criteria 14.2-110
14.2.12.3.29 Test Number 29 - Recirculation Flow Control 14.2-110
14.2.12.3.29.1 29A - Valve Position Control 14.2-110
14.2.12.3.29.1.1 Purpose 14.2-110
14.2.12.3.29.1.2 Prerequisites 14.2-110
14.2.12.3.29.1.3 Description 14.2-110
14.2.12.3.29.1.4 Criteria 14.2-111
14.2.12.3.29.2 29B - Recirculation Flow Loop Control 14.2-112
14.2.12.3.29.2.1 Purpose 14.2-112
14.2.12.3.29.2.2 Prerequisites 14.2-112
14.2.12.3.29.2.3 Description 14.2-112
14.2.12.3.29.2.4 Criteria 14.2-113
14.2.12.3.30 Test Number 30 - Recirculation System 14.2-115
14.2.12.3.30.1 30A - One Pump Trip 14.2-115
14.2.12.3.30.1.1 Purpose 14.2-115
14.2.12.3.30.1.2 Prerequisites 14.2-115
14.2.12.3.30.1.3 Description 14.2-115

Chapter 14

INITIAL TEST PROGRAM

TABLE OF CONTENTS (Continued)

Section — Page

14.2.12.3.30.1.4 Criteria 14.2-115
14.2.12.3.30.2 30B - Recirculation Trip of Two Pumps 14.2-116
14.2.12.3.30.2.1 Purpose 14.2-116
14.2.12.3.30.2.2 Prerequisites 14.2-116
14.2.12.3.30.2.3 Description 14.2-116
14.2.12.3.30.2.4 Criteria 14.2-116
14.2.12.3.30.3 30C - System Performance 14.2-117
14.2.12.3.30.3.1 Purpose 14.2-117
14.2.12.3.30.3.2 Prerequisites 14.2-117
14.2.12.3.30.3.3 Description 14.2-117
14.2.12.3.30.3.4 Criteria 14.2-117
14.2.12.3.30.4 30D - Recirculation Pump Runback 14.2-118
14.2.12.3.30.4.1 Purpose 14.2-118
14.2.12.3.30.4.2 Prerequisites 14.2-118
14.2.12.3.30.4.3 Description 14.2-118
14.2.12.3.30.4.4 Criteria 14.2-118
14.2.12.3.30.5 30E - Recirculation System Cavitation 14.2-118
14.2.12.3.30.5.1 Purpose 14.2-118
14.2.12.3.30.5.2 Prerequisites 14.2-118
14.2.12.3.30.5.3 Description 14.2-118
14.2.12.3.30.5.4 Criteria 14.2-119
14.2.12.3.31 Test Number 31 - Loss of Turbine-Generator and Offsite Power 14.2-119
14.2.12.3.31.1 Purpose 14.2-119
14.2.12.3.31.2 Prerequisites 14.2-119
14.2.12.3.31.3 Description 14.2-119
14.2.12.3.31.4 Criteria 14.2-119
14.2.12.3.32 Not Applicable 14.2-120
14.2.12.3.33 Test Number 33 - Piping Vibration 14.2-120
14.2.12.3.33.1 Purpose 14.2-120
14.2.12.3.33.2 Prerequisites 14.2-120
14.2.12.3.33.3 Description 14.2-120
14.2.12.3.33.4 Criteria 14.2-120
14.2.12.3.34 Test Number 34 - Reactor Pressure Vessel Internals Vibration 14.2-121
14.2.12.3.34.1 Purpose 14.2-121
14.2.12.3.34.2 Prerequisites 14.2-121

Chapter 14

INITIAL TEST PROGRAM

TABLE OF CONTENTS (Continued)

Section — Page

14.2.12.3.34.3 Description 14.2-121
14.2.12.3.34.4 Criteria 14.2-122
14.2.12.3.35 Test Number 35 - Recirculation System Flow Calibration 14.2-122
14.2.12.3.35.1 Purpose 14.2-122
14.2.12.3.35.2 Prerequisites 14.2-122
14.2.12.3.35.3 Description 14.2-122
14.2.12.3.35.4 Criteria 14.2-123
14.2.12.3.36 Test Number 70 - Reactor Water Cleanup System 14.2-123
14.2.12.3.36.1 Purpose 14.2-123
14.2.12.3.36.2 Prerequisites 14.2-123
14.2.12.3.36.3 Description 14.2-123
14.2.12.3.36.4 Criteria 14.2-123
14.2.12.3.37 Test Number 71 - Residual Heat Removal System 14.2-124
14.2.12.3.37.1 Purpose 14.2-124
14.2.12.3.37.2 Prerequisites 14.2-124
14.2.12.3.37.3 Description 14.2-124
14.2.12.3.37.4 Criteria 14.2-124
14.2.12.3.38 Test Number 72 - Drywell Atmosphere Cooling System 14.2-125
14.2.12.3.38.1 Purpose 14.2-125
14.2.12.3.38.2 Prerequisites 14.2-125
14.2.12.3.38.3 Description 14.2-125
14.2.12.3.38.4 Criteria 14.2-125
14.2.12.3.39 Test Number 73 - Cooling Water Systems 14.2-125
14.2.12.3.39.1 Purpose 14.2-125
14.2.12.3.39.2 Prerequisites 14.2-125
14.2.12.3.39.3 Description 14.2-125
14.2.12.3.39.4 Criteria 14.2-126
14.2.12.3.40 Test Number 74 - Offgas System 14.2-126
14.2.12.3.40.1 Purpose 14.2-126
14.2.12.3.40.2 Prerequisites 14.2-126
14.2.12.3.40.3 Description 14.2-126
14.2.12.3.40.4 Criteria 14.2-127

Chapter 14

INITIAL TEST PROGRAM

LIST OF TABLES

Number	Title	Page
14.2-1	*Preoperational Tests*	*14.2-129*
14.2-2	*Major Plant Transients*	*14.2-132*
14.2-3	*Stability Tests*	*14.2-133*
14.2-4	*Power Ascension Test Program*	*14.2-134*

Chapter 14

INITIAL TEST PROGRAM

LIST OF FIGURES

Number	Title
14.2-1	*Test Condition Region Definition*
14.2-2	*Test and Startup Relation to Other Energy Northwest Departments*
14.2-3	*CGS Startup Organization*
14.2-4	*Preoperational Test Schedule*
14.2-5	*RCIC Acceptance Criteria Curves for Capacity and Actuation Time*
14.2-6	*Maximum Acceptable Drive Flow Response*

Chapter 14

INITIAL TEST PROGRAM

14.1 SPECIFIC INFORMATION INCLUDED IN PRELIMINARY SAFETY ANALYSIS REPORTS

The initial test program overall test objectives and general prerequisites were previously provided in the Preliminary Safety Analysis Report (PSAR). The technical aspects of the initial test program are described in Section 14.2 in sufficient detail to show that the test program adequately verifies the functional requirements of plant structures, systems, and components such that the safety of the plant will not be dependent on untested structures, systems, or components.

14.2 SYSTEM LINEUP, PREOPERATIONAL, AND INITIAL STARTUP TEST PROGRAM

The italicized information is historical and was provided to support the application for an operating license.

The initial test program consisted of a series of tests categorized as system lineup testing, preoperational, and initial startup tests. The system lineup testing determines correct installation and functional operability of equipment. Preoperational tests are those tests normally conducted prior to fuel loading to demonstrate the capability of plant systems to meet performance requirements. Initial startup tests began with fuel loading and demonstrated the capability of the integrated plant to meet performance requirements.

14.2.1 SUMMARY OF TEST PROGRAM AND OBJECTIVES

14.2.1.1 Initial Test Program Objectives

The objectives of the initial test program are to

a. Ensure that the construction is complete and acceptable,

b. Demonstrate the capability of structures, components, and systems to meet performance requirements,

c. Effect fuel loading in a safe manner,

d. Demonstrate, where practical, that the plant is capable of withstanding anticipated transients and postulated accidents,

e. Evaluate and demonstrate, to the extent possible, plant operating procedures to provide assurance that the operating group is knowledgeable about the plant and procedures and fully prepared to operate the facility in a safe manner, and

f. Bring the plant to rated capacity and sustained power operation.

14.2.1.2 Initial Test Program Summaries

The three categories of tests in the initial test program are summarized below:

a. System lineup tests such as pump and valve tests, mechanical actuation to verify proper installation, and electrical continuity verifications, are those tests which demonstrate that components are correctly installed and operational.

b. Preoperational tests conducted prior to fuel loading to demonstrate that the plant systems have been properly designed and that they meet performance requirements.

c. Startup tests consist of fuel loading, precritical tests, low power tests, and power ascension tests that ensure fuel loading in a safe manner, confirm the design bases, demonstrate where practical that the plant is capable of withstanding the anticipated transients and postulated accidents, and ensure that the plant is safely brought to rated capacity and sustained power operation.

14.2.1.3 Description of System Lineup Tests

Typical system lineup tests generally include but are not limited to the following:

a. Chemical cleaning and flushing of systems, tanks, and vessels,

b. Electrical equipment to test and/or energize, e.g., grounding, relays, circuit breaker operation and controls, continuity, megger, phasing, high potential measurements, and buses,

c. Initial adjustment, bumping, and running of rotating equipment,

d. Checking control and interlock functions of instruments, relays, and control devices,

e. Calibrating instruments and checking or setting initial trip setpoints,

f. Pneumatic testing of instruments and service air system and cleanout of lines,

g. Checking and adjusting relief and safety valves,

h. Complete tests of safety-related motor-operated valves including adjusting torque switches and limit switches, checking all interlocks and controls, measuring motor current and operating speed, and checking leaktightness of stem packing and valve seat during hydrotests; and complete tests of the nuclear steam supply system (NSSS) control systems including checking all interlocks and controls, adjusting limit switches, measuring operating speed, checking leaktightness of pneumatic operators, and checking for proper operation of controllers, pilot solenoids, etc., and

i. Other tests and verifications such as structural, leaktightness, and vibration.

14.2.1.4 Description of Preoperational Tests

A listing of the preoperational tests is provided in Table 14.2-1. The general objectives of the preoperational test phase are as follows:

a. Ensure that test acceptance criteria are met,

b. Provide documentation of the performance and safety of equipment and systems,

c. Provide baseline test and operating data on equipment and systems for future reference,

d. Run-in of a system for a sufficient period so that any design, manufacturing, or installation defects can be detected and corrected,

e. Ensure that plant systems operate together on an integrated basis to the extent possible,

f. Give maximum opportunity to the permanent plant operating staff to obtain practical experience in the operation and maintenance of equipment and systems,

g. Establish safe and efficient normal, abnormal, and emergency operating procedures, to the extent possible,

h. Establish and evaluate surveillance testing procedures, and

i. Demonstrate that systems and safety equipment are operational and that it is possible to proceed to fuel loading and to the Startup Phase.

14.2.1.5 Description of Startup Tests

The Power Ascension Test Phase (PATP) begins after the Preoperational Test Phase has been completed. The Power Ascension Test Phase begins with fuel loading and extends to commercial operation. This phase is subdivided into the following four parts:

a. Open vessel testing (fuel loading and shutdown power level tests),
b. Initial heatup,
c. Power testing, and
d. Warranty demonstration.

The tests conducted during the Power Ascension Test Phase consist of major plant transients (Table 14.2-2), stability tests (Table 14.2-3), and a remainder of tests which are directed

towards demonstrating correct performance of the nuclear boiler and numerous auxiliary plant systems while at power. Certain tests may be identified with more than one class of test. Table 14.2-4 shows the complete Power Ascension Test Program. Figure 14.2-1 provides test conditions region definition.

The general objectives of the Power Ascension Test Phase are as follows:

a. Achieve an orderly and safe initial core loading,

b. Accomplish all testing and measurements necessary to determine that the approach to initial criticality and subsequent power ascension is safe and orderly,

c. Conduct low power physics tests sufficient to ensure that test acceptance criteria have been met,

d. Conduct initial heatup and hot functional testing so that hot integrated operation of all systems is shown to meet test acceptance criteria,

e. Conduct an orderly and safe power ascension program, with requisite physics and systems testing, to ensure that the plant operating at power meets test acceptance criteria, and

f. Conduct a successful warranty demonstration program.

14.2.2 ORGANIZATION AND STAFFING

14.2.2.1 General

The Energy Northwest Test and Startup Program is administered by two entities with distinct levels of responsibility and two distinct organizations.

For the system lineup test phase and the preoperational test phase, the Test Working Group (TWG) provides review, approval, and planning of general Test and Startup Program activities and the results of those activities. The Test and Startup organization and qualified members of other organizations represented on the TWG provide the necessary development, implementation, and analysis of Test and Startup Program activities at the working level.

For the Power Ascension Test Phase, the Plant Operations Committee (POC) provides review and planning of the test program and evaluates the test results. The Plant Manager approves the procedures and final test reports. The implementation of the PATP is achieved with the normal plant operations crew operating the plant and test engineers under the direction of the Reactor Engineering Supervisor coordinating the test activities.

14.2.2.2 Definitions

The definitions of phrases used in this section and throughout this chapter are as follows:

a. Test Working Group (TWG) - a project onsite administrative body whose membership consists of personnel representing organizations directly responsible for preparation and performance of testing and startup during the system lineup and preoperational test phases. This group provides review and approval of test preparation and performance activities.

b. Power Generation - an Energy Northwest organization within the Operations Directorate with responsibility for development and implementation of the Test and Startup Program.

c. Columbia Generating Station (CGS) Test and Startup - a Power Generation division with responsibility for development and implementation of the CGS Test and Startup Program.

d. CGS Plant Organization - a Power Generation division with responsibility to startup, operate, and maintain CGS in compliance with Federal, State, local, and owner requirements.

e. CGS Plant Operations Committee (POC) - refer to definition in Section 13.4.1. The POC reviews the activities of the Power Ascension Test Phase.

f. Test and Startup Manager - the Power Generation Division Manager with responsibility for implementation of the CGS Test and Startup Program.

g. Test and Startup Program - the program that encompasses the transition from construction to commercial operation and consists of system lineup testing, preoperational testing, and power ascension testing.

h. Test and Startup Program Manual - the manual that defines generic administrative policy and procedures for the initial testing and startup of Energy Northwest nuclear facilities.

i. Test and Startup Instructions - the specific instructions required to implement the Test and Startup Program for an individual project.

j. Plant Procedure Manual (PPM) - the Plant Manager approved procedures for operating the plant. The PPMs include the test procedures for the PATP.

14.2.2.3 Test and Startup Program Organization and the System Lineup and Preoperational Test Program

14.2.2.3.1 General

Power Generation is an organization within the Energy Northwest Operations Directorate. Relative to the Program, Power Generation is responsible for development and administration of plans, policies, and administrative procedures; procurement of test equipment and other test-related resources, and assignment of the CGS Test and Startup Manager. The Power Generation organization and its relationship to other Energy Northwest organizations is shown in Figure 14.2-2.

14.2.2.3.2 Responsibilities of CGS Test and Startup Division

CGS Test and Startup is a Division of the Power Generation organization. The CGS Test and Startup Manager manages an organization comprised of Energy Northwest test engineers and test technicians augmented by test personnel from the architect-engineer, the NSSS supplier, and others as contractually established. The CGS Test and Startup Manager is responsible for the development and implementation of the CGS Test and Startup program and those responsibilities are described in Section 14.2.2.3.3. The CGS Test and Startup staff organization is shown in Figure 14.2-3.

14.2.2.3.3 CGS Test and Startup Department Position Responsibilities

14.2.2.3.3.1 CGS Test and Startup Manager.

a. Chairman, TWG;

b. Develop plans, schedules, methods, procedures, and data systems for the testing and evaluation of all plant equipment and systems to permit acceptance and licensing;

c. Administer and coordinate the testing activities with other organizations involved in the Test and Startup Program;

d. Manage and direct assigned test personnel in activities relating to the attainment of Test and Startup Program objectives;

e. Manage and direct assigned test personnel to establish qualitative and quantitative acceptance criteria and develop test procedures to direct and guide performance of testing, and

f. Provide recommendations and effect actions to eliminate equipment or system deficiencies as determined by Test and Startup Program criteria which could adversely affect performance of safety-related functions.

14.2.2.3.3.2 CGS Test Group Manager.

a. Represent Test and Startup on the TWG;

b. Coordinate the activities of Test Group Supervisors and test engineers during the Test and Startup Program;

c. Develop, monitor, and coordinate the preparation and implementation of plans, schedules, methods, and procedures for testing and evaluation of plant systems and components for verification of performance and acceptance;

d. Maintain surveillance over testing performed by Energy Northwest and others, including system and equipment tests, and calibration of instrumentation;

e. Identify problem areas and recommend actions where deficiencies could adversely affect the performance, safety-related functions, or operating efficiency;

f. Assist in preparation of program status and other Test and Startup Program related reports, and

g. Assume the responsibilities of the Test and Startup Manager as described in the Test and Startup Program Manual (TSPM) during his absence and all other responsibilities specifically delegated.

14.2.2.3.3.3 CGS Test Group Supervisor. Test Group Supervisors are assigned lead technical responsibility for testing. General Test Group Supervisors' duties are as follows:

a. Supervise the activities of assigned test engineers;

b. Review and, where appropriate, approve test procedures, field changes to procedures and test results, and make recommendations to the Test Group Managers or Startup Manager, as appropriate;

c. Set schedules and priorities for assigned Test Engineers and assist them with problem resolution;

d. With other Test Group Supervisors and the Test Group Manager or Startup Manager, as appropriate, plan and coordinate startup activities and provide assistance;

e. Advise the Test Group Manager or Test and Startup, as appropriate, on all matters concerning testing within their group and if required, attend TWG meetings for this purpose;

f. Act for the Test Group Manager or Test and Startup Manager, as appropriate, when so delegated;

g. Prepare for and perform testing as required to support the Test and Startup Program;

h. Coordinate the identification and documentation of design problems and their resolution, and

i. Advise the Test Group Manager or Test and Startup Manager, as appropriate, regarding current and future manpower requirements impacting the testing effort.

14.2.2.3.3.4 CGS Test Engineers. Test engineers provide for the routine development and implementation of testing. General test engineer duties are as follows:

a. Prepare assigned test procedures,

b. Review tests and inspections prepared by others for application to assigned testing responsibilities,

c. Provide direction during performance of system and component testing, and

d. Identify problem areas and recommend actions where deficiencies could adversely affect performance of safety-related functions or operating efficiency.

14.2.2.4 Plant Operations Organization and the Power Ascension Test Program

The PATP will be carried out by the plant operations organization using test procedures developed and approved according to the requirements of the PPM. The PATP procedures were prepared by members of the plant technical department under the supervision of the Reactor Engineering Supervisor. Technical expertise from other Energy Northwest organizations and from the General Electric Company (GE), the NSSS vendor, was used whenever necessary. Review of these procedures and scheduling of the test activities will be carried out by the POC and approved by the Plant Manager. The Reactor Engineering

Supervisor will direct the PATP test engineers in the completion of testing according to the POC schedule.

14.2.2.5 Test Working Group

14.2.2.5.1 System Lineup and Preoperational Test Program

The purpose of the TWG, a composite of representatives from organizations directly responsible for preparation, performance, and review of Test and Startup Program activities, is to provide a means for a coordinated review of all testing concerns and ensuring all obligations to the Test and Startup Program are met by the organizations represented.

The TWG provides review and approval of all activities proposed and the results thereof as appropriate. All decisions and approvals or recommendations of the group are included in the minutes of the meetings. Matters requiring approval by the TWG includes, but are not limited to

a. System lineup procedures,
b. Preoperational test procedures,
c. Changes to test procedures, and
d. Results of testing.

14.2.2.5.2 Membership and Responsibility of the Test Working Group

The TWG membership consist of organizations that have a direct support function for conduct or development of testing.

The CGS Test and Startup Manager is Chairman of the TWG and is responsible for convening and conducting TWG meetings on the administrative and technical content of program activities.

The Test Group Manager is responsible for providing a technical review of the proposed activities, technical documents, and their results. The Test Group Manager serves as Chairman during the absence of the Test and Startup Manager.

The CGS Plant Manager is responsible for providing an operational review of test documents and for submitting safety-related documents to the POC for review and for communicating the committee's decisions to the TWG. The Plant Manager provides detailed plant operating procedures and surveillance procedures to be used for plant operation and testing during the Test and Startup Program system lineup and preoperational test phase.

The plant quality assurance representative to the TWG shall be responsible for review of proposed activities, test procedures, and test results as required by the Operational Quality Assurance Program Description (OQAPD).

The project engineering representative is responsible for obtaining a technical review of proposed activities and test documents by assigned project engineers and for providing a working relationship with Energy Northwest and architect-engineering organizations to aid resolution of testing concerns.

Conditional Members are representative of any organization having responsibility and/or expertise in the area of the TWG meeting agenda. In this situation the representative will be requested to attend the meeting by the TWG chairman.

14.2.2.6 Plant Organization Functions and Responsibilities During All Testing and Plant Operations

The plant organization has overall responsibility for the safe and efficient operation of plant systems and equipment, from provisional acceptance through commercial operation including responsibility for maintenance and operational control. Plant organization responsibilities in supporting the Test and Startup Program are discussed in Section 14.2.2.7.1.

The responsibility of the plant organization representative to the TWG is defined in Section 14.2.2.5.2.

14.2.2.7 Energy Northwest Support of the Test and Startup Program

14.2.2.7.1 Plant Organization

In addition to the responsibilities described in Section 14.2.2.6, the plant operating, technical, and maintenance sections provide manpower for development, implementation, and review of testing.

14.2.2.7.1.1 Support During Test and Startup Program Development. Assistance during the development of the Test and Startup Program is provided formally through the plant organization's TWG representative and through the POC. Input to test procedures and other testing documentation by the plant staff ensures that

a. The operational requirements of the test procedures are based on the knowledge and experience of the operating staff,

b. The technical considerations receive the review of the Plant Technical Staff, and

c. Important nuclear and operational safety considerations receive attention by the plant organization.

14.2.2.7.1.2 Support During Testing. Detailed review and analysis of system lineup and preoperational test results will be performed by the plant technical section and/or plant operations section where their particular expertise is deemed necessary by the plant representative to the TWG to support approvals of completed system lineup and preoperational tests.

Detailed review and analysis of PATP test results will be carried out by the test engineers of the plant operations technical department and will receive final review through the POC and final approval by the Plant Manager.

14.2.2.7.2 CGS Program

The CGS Program Director is responsible for the performance of the organizations involved in the design, procurement, and construction of generating projects. The Program Director supports the Test and Startup Program by providing and implementing project control systems, project engineering services, and engineering support services.

The CGS Program Director supports the Test and Startup Program by maintaining a high level of current status information available to the startup program organizations to ensure that all startup program scheduling and preparation is based on an accurate assessment of the condition of systems and equipment being readied for testing. The Program Director provides liaison with Construction Management for the provision of construction craft support for the implementation of various system lineup and preoperational tests.

14.2.2.7.3 Plant Quality Assurance

The functions of the plant Quality Assurance organization during the Test and Startup Program will be to survey ongoing efforts to determine that the controls required by various regulations, guides, and standards are effectively implemented. The activities of the TWG will be monitored to ensure that the proper degrees of control for safety-related activities are being maintained and that required activities are completed when they are prerequisite to another testing activity.

14.2.2.8 Architect-Engineer Support of the Test and Startup Program

Burns and Roe, Inc., is responsible for providing engineering services required to ensure timely completion of construction testing and equipment turnover for provisional acceptance and system turnover. Burns and Roe also provides system-oriented engineers to assist the CGS Test and Startup Divisions, as requested by Energy Northwest technical direction and/or advice and consultation during system and component testing through preoperational testing.

14.2.2.9 General Electric Support of the Test and Startup Program

General Electric is the supplier of the boiling water reactor (BWR) NSSS for the CGS plant. General Electric is responsible for generic and specific CGS designs and for the supply of the NSSS. During the construction phase of the plant cycle, the GE Resident Site Manager is responsible for all NSSS equipment disposition. When the startup testing phase of the project begins after fuel load, the responsibility of GE-NSSS activities are assigned to the Preoperational and Startup group. The GE Preoperational and Startup staff responsibilities are outlined below.

14.2.2.9.1 Staff Responsibilities

14.2.2.9.1.1 General Electric Operations Manager. The GE Operations Manager is the senior NSSS vendor representative onsite at or near official fuel loading, and is the official site spokesman for GE for preoperational and startup testing concerns and requirements. The Operations Manager coordinates with the Startup Superintendent for the performance of his duties, which are as follows:

a. Reviewing all NSSS test procedures, including changes to test procedures, and test results as a conditional member of TWG and POC,

b. Providing technical direction to the station staff,

c. Managing the activities of the GE site personnel in providing technical direction to CGS personnel in the testing and operation of GE-supplied systems,

d. Providing liaison between the site and the GE San Jose home office to provide rapid and effective solution to problems that cannot be solved onsite,

e. Participating as a conditional member of the TWG when required, and

f. Reviewing test procedures for the POC.

14.2.2.9.1.2 General Electric Operations Superintendent. The GE Operations Superintendent is responsible to the GE Operations Manager for supervising the activities of GE Shift Superintendents. He works directly with the CGS Operations Manager in providing GE technical direction to the operating organization.

14.2.2.9.1.3 General Electric Shift Superintendents. The GE shift superintendents provide technical direction to CGS shift personnel in the testing and operation of GE-supplied systems. They provide 24-hr per day shift coverage as required beginning with fuel loading. They report to the GE Operations Superintendent.

14.2.2.9.1.4 General Electric Lead Engineer - Startup Test, Design, and Analysis. The GE lead engineer - Startup Test, Design, and Analysis, is responsible to the GE Operations Manager for supervising the GE shift engineers and for verifying core physics parameters and characteristics and documenting that performance of the NSSS and components conform to test acceptance criteria.

The lead engineer works with the CGS technical department to coordinate and effect implementation of the PATP instrumentation including special test equipment required to confirm these acceptance criteria.

14.2.2.10 Qualifications of Personnel Supporting the Test and Startup Program

The qualifications described in this section are for those persons having authority to direct testing, review and approve test documentation and results, or otherwise have direct influence on the conduct of testing and quality of acquired data. Although other personnel, specifically GE, Burns and Roe, and Energy Northwest technical specialists, are also involved in these processes, they are under the direction of individuals whose qualifications are described herein and who review and approve all Test and Startup Program activities.

14.2.2.10.1 Test and Startup Program Department Personnel Qualifications

a. At the time of appointment to the active position, the CGS Test and Startup Manager shall have 10 years of responsible thermal power plant experience such as, but not limited to, managerial, technical, or administrative positions, of which a minimum of 3 years shall be nuclear power plant experience. A maximum of 4 years of the remaining 7 years of experience may be fulfilled by academic training on a one-to-one basis. This academic training shall be in engineering or the individual shall have acquired the experience and training normally required for examination by the NRC for a senior operator license whether or not the examination is taken.

b. Minimum qualifications for Test Group Manager are a B.S. degree in engineering or related field and 6 years of applicable experience, at least 3 of which are in testing or operation of nuclear power generation, propulsion, or similar scale test or production facilities. Related experience may be substituted for academic requirements when the candidate's professional background and level of achievement clearly demonstrate capabilities to fill the position. Previous preoperational testing experience is required. A good understanding of quality assurance and regulatory requirements and an ability to effectively communicate with others are necessities. A demonstrated technical leadership in his discipline and necessary work experience at the Test Group Supervisor or equivalent level is evidence of required proficiency.

c. Minimum qualifications for Test Group Supervisor are a B.S. degree in engineering or related field and 5 years of applicable experience, at least 2 of which are in testing or operation of nuclear power generation, propulsion, or similar scale test or production facilities. Related experience may be substituted for academic requirements when the candidate's professional background and level of achievement clearly demonstrate capabilities to fill the position. Previous preoperational testing experience is required. A good understanding of quality assurance and regulatory requirements and an ability to effectively communicate with others are necessities. A demonstrated technical leadership in his discipline and necessary work experience at the Senior Test Engineer or equivalent level is evidence of required proficiency.

d. Minimum qualifications for a Test Engineer directing preoperational tests are a B.S. degree in engineering or related field or a graduate of a technical or vocational school in an engineering or related field and 2 years of related experience. Related experience above the required minimum may be substituted for academic requirements when the candidate's record for performance clearly indicates the ability to fill the position without question. A good understanding of engineering principles and the ability to understand new concepts and to effectively communicate with others is a necessity.

Minimum requirements for a Test Engineer directing startup tests are a B.S. degree in engineering or related field and 2 years of related experience or a graduate of a technical or vocational school in an engineering or related field, and 3 years of related experience. Related experience above the required minimum may be substituted for academic requirements when the candidate's record for performance clearly indicates the ability to fill the position without question. A good understanding of engineering principles and the ability to understand new concepts and to effectively communicate with others is a necessity.

14.2.2.10.2 Plant Organization Personnel Qualifications

Qualifications of some plant personnel are discussed in Section 13.1.3.

14.2.3 TEST PROCEDURES

14.2.3.1 Development of Test Procedures

Test Procedures are developed by the CGS Test and Startup or Plant Operations Department to provide a detailed method to demonstrate the capability of the system to perform its design function under anticipated operating and accident condition.

General Electric Company as supplier of the NSSS provides test program specifications and instructions from which Energy Northwest prepares the preoperational and initial startup test procedures for systems supplied by GE.

Architect-Engineer and Vendors

Technical assistance is provided by Burns and Roe and vendor technical representatives as deemed necessary.

14.2.3.1.1 Incorporation of Plant Procedures

The following program will be implemented at CGS to utilize and qualify plant operating procedures during testing.

a. Plant procedures required to support testing will have been prepared and approved before preoperational testing begins on the system using the best information available from the principal designer and responsible equipment suppliers.

b. Preoperational test procedures will use plant operating and emergency procedures as nearly as possible.

c. Using the results of preoperational testing, including the use-testing of plant procedures where practical, the plant procedures required to support startup testing will be updated and revised before startup testing of applicable systems. Exceptions to this program will be those approved plant procedures required to be verified during the startup phase.

d. Startup test procedures will be developed using the results of preoperational testing and updated plant procedures.

14.2.3.1.2 Format of Test Procedures

14.2.3.1.2.1 Preoperational Test Phase. The minimum content requirements for CGS Preoperational test procedures are specified in the Energy Northwest TSPM. The format for CGS test procedures is specified in the CGS TSPM. The resulting format and content is the following:

a. Preoperational Test Procedure Format

1. Purpose

A concise description of the objectives of the test, including such test requirements as component functions to be checked and testing under normal or simulated conditions to verify readiness for system startup and operation, and system tests to confirm that the performance of the system is in compliance with all applicable design requirements.

2. Prerequisites

Provisions necessary for performance of the test. Conditions that should exist prior to start of the test. Instructions given to identify required operational status of the plant and interfacing systems, environmental conditions, and individual component status requirements, including verification of the following:

(a) Components and systems being tested have been turned over and open deficiencies will not affect the performance of the test,

(b) System lineup testing on components, included in the test, is complete,

(c) Necessary support systems are available, and

(d) For control system testing, the other principal control systems are in appropriate operating modes for the given test conditions.

3. Limits and Precautions

Special precautions required for safety of personnel and equipment or needed to ensure a meaningful test and satisfactory performance of testing.

4. Special Equipment

A list of special material and equipment for the performance of the test.

5. Procedure

A step by step procedure for performing the test. Plant operating procedures will be utilized whenever practicable for the operation of

systems and equipment during testing and for returning the system to normal after completion of testing. Abnormal procedures will be utilized as required to supplement normal plant operating procedures. Data collection will be part of the procedure steps.

6. Restoration

Includes those steps necessary to return the system to a normal operating or tagged status. This may include removal of special test instruments, temporary equipment, electrical jumpers, valve lineups, etc.

7. Acceptance Criteria

The criteria against which the success or failure of the test will be judged must be identified. In some instances, these will be qualitative criteria, e.g., given event does or does not occur. In other cases, quantitative values can be designated as acceptance criteria.

(a) All quantitative acceptance criteria shall include suitable tolerances, and

(b) A readily apparent correlation should exist to cross-reference among procedure steps, data, and acceptance criteria.

8. References

A listing of all material required for the preparation and performance of the test. This should include piping and instrumentation drawings, electrical elementary drawings, vendor instruction manuals, applicable FSAR sections, contract specifications, and applicable codes, standards or guides, and applicable plant procedures.

14.2.3.1.2.2 Power Ascension Test Phase. All PATP procedures will be formatted according to the PPM.

14.2.3.2 Review of Test Procedures

Each member of the TWG ensures test procedures will provide for review with respect to that member's organizational area of responsibility. Power ascension test procedures will be reviewed by the POC.

Comments submitted by TWG members will be evaluated by the TWG and the test procedure revised accordingly. After discussion of the resulting version, the decision to reject, accept, or

accept with modification, will be obtained by consensus of the membership of the TWG. In the event the TWG cannot reach a consensus, the Chairman shall provide resolution or a method for resolving the issue to the appropriate division management for review and concurrence.

The results of the POC review of PATP will be approved by the Plant Manager.

The qualifications of the individuals or organization representatives reviewing test procedures are described in Section 14.2.2.10.

The administrative procedures governing the test procedure review process are contained in the CGS TSPM. These procedures cover the mechanism for review and comment resolution, documentation of this review, and method of indication for the review status of a test procedure.

14.2.3.3 Approval of Test Procedures

Test procedures will be approved by the TWG Chairman by means of consensus of the TWG membership after review of the test procedure as described in Section 14.2.3.2. Power ascension test procedures will be reviewed by the POC in a similar manner.

Individual test procedures will be approved by the chairman of the TWG or POC/Plant Manager, as appropriate. The consensus of the two committees were contained in the meeting minutes.

The administrative procedures governing the exercise of approval of test procedures are contained in the CGS TSPM or the PPM.

14.2.4 CONDUCT OF TEST PROGRAM

14.2.4.1 Administrative Procedures for Preoperational Testing

14.2.4.1.1 Test Performance Authorization

A significant period of time may have elapsed between the time a preoperational test procedure was approved and the time a test is performed. The test procedure is therefore reviewed just prior to initiating the test. Any changes in the system since original approval of the test procedure will be thoroughly researched and the test procedure revised and approved in accordance with Sections 14.2.3.2 and 14.2.3.3. The CGS Test and Startup Manager will then approve the test procedure for performance of the test.

14.2.4.1.2 Preoperational Test Prerequisites

Approval by the Test and Startup Manager to perform a preoperational test also requires consideration of the prerequisite testing required to qualify components and systems for operation. In general, completion of the system lineup testing (see Section 14.2.1.3) will qualify the system for preoperational testing. System lineup testing, as a prerequisite to preoperational testing, includes the following:

a. Instrumentation and protective relay checks, including calibration, setpoint adjustments, logic verification, and line checks;

b. Component operability checks, including valve stroking, motor rotation, ventilation system balancing, rotating equipment run-in and pipe support inspection and adjustment;

c. Flushing, including proof flushes, flow instrumentation response, and pump performance and capacity checks;

d. Electric component and system checks, including breaker trip setpoints; and

e. Hydrostatic or pneumatic pressure tests and systems where dynamic testing, such as pump runs, are required to allow performance of pressure tests. Pressure integrity tests are otherwise performed during construction testing.

Verification that required system lineup tests have been or can be successfully completed prior to preoperational testing is performed by the respective test group manager prior to recommending turnover of a system or component from a contractor to Energy Northwest. Verification that the system is actually ready for preoperational testing will be performed as described in Section 14.2.4.3.

14.2.4.1.3 Conduct of Preoperational Testing

a. Implementation responsibilities for scheduling all tests are assigned to the CGS Test and Startup Manager. The TWG will be kept informed of the scheduled activities.

b. The satisfaction of prerequisites to commencement of the test, as indicated in the test procedure, will be verified by the test engineer prior to performance of the test.

c. The assigned test engineer is responsible for directing the performance of each test. Testing is performed in direct coordination between the test engineer and shift supervision.

d. All testing will be conducted in accordance with approved test procedures. If, during the performance of a test the procedure is unacceptable, the test engineer can propose changes by use of a "Test Change Notice" (see Section 14.2.4.4). This provided both documentation of the change and confirmation by the TWG.

e. All test data will be entered on or attached to the record copy of the test procedure.

14.2.4.1.4 Deficiency Reporting

Deficiencies or discrepancies identified during testing will be reported individually as described in Section 14.2.5.2.

Corrective action or satisfactory disposition shall be taken on all deficiencies and discrepancies in equipment and procedures prior to final approval of the preoperational test results. All deficiencies or discrepancies identified during the test, or which have not been resolved on completion of the test, will be recorded in the record copy of the preoperational test.

14.2.4.1.5 Equipment Maintenance and Modifications During Preoperational Testing

Modifications or repair to safety-related systems will be implemented as a result of a formal system of problem and deviation reporting. Disposition of problems requiring mechanical or electrical changes or repairs by contractors will be implemented by work requests.

a. Startup Problem Reports (SPR), Startup Deficiency Reports (SDR), and Startup Work Requests (SWR) are administered through closed-loop procedural controls to ensure resolutions. A completed SPR, SDR, and SWR is approved for closure by the respective Test Group Manager.

b. Startup Problem Reports are used to report design deficiencies and are coordinated by the Energy Northwest project engineering organization for resolution by the responsible design organization or qualified alternate. The SPRs are reviewed by engineering and a Project Engineering Directive (PED) is issued to define plant modifications or changes that are required. An SWR is then issued to perform the plant modification by contractor personnel or an SDR is issued to defer the work or have it performed by startup personnel.

c. Startup Deficiency Reports (SDR) are used to report and track non-design-related deficiencies. If required, an SWR will be issued to perform the repair work to resolve the non-design-related deficiency by contractor personnel. Work accomplished by startup personnel can be accomplished by the SDR without issuing an SWR.

d. Retest requirements will be identified on the SWR or SDR and attached to, or referenced by the work request number in test files.

e. Startup Problem Reports, SDR, SWR, design change documentation, retest results, and procurement records for safety-related systems will be filed in assembled packages or with appropriate cross-referencing for retrievability.

14.2.4.1.6 Preoperational Test Summary

During the preoperational test, the test engineer will prepare a test report which includes a summary of the conduct of the test, evaluation of the test results with reference to the acceptance criteria, and a description of problems encountered and corrective actions taken or proposed. This report will be attached to the record copy of the test.

14.2.4.1.7 Evaluation of Preoperational Test Data

On completion of the test, a copy of the official test procedure, data, the test summary, and other applicable attachments will be transmitted to each member of the TWG responsible for review.

14.2.4.1.8 Preoperational Test Records

The Test and Startup Manager will maintain all official test records (the copy of the test procedure containing the original test data and signatures and all attachments) until completion of the test program. See Section 14.2.6 for details of the test records handling and retention program.

14.2.4.2 Administrative Procedures for Power Ascension Testing

14.2.4.2.1 Plant Operation During Power Ascension Testing

During initial startup tests and operations, the plant procedures are followed except as specifically modified by approved test procedures. In addition, special safety precautions and limitations are included in the test procedures. Approved test procedures will be used to control test conditions outside of the Technical Specifications limits where allowed for test purposes.

Certain individual tests or power escalations may require authorization by both the POC and the Plant Manager immediately prior to implementation and will be so identified in the applicable test procedure.

The final authority to start or continue a test is the responsibility of the Shift Manager after all previous approvals have been exercised. Testing is performed in direct coordination between the test engineer and Shift Manager.

14.2.4.2.2 Power Ascension Test Scheduling and Sequencing

Scheduling and sequencing of testing during startup is performed under the direction of the Plant Manager by POC.

The startup or power ascension test sequence is described in terms of individual test evolutions and specific power plateaus due to interfaces with other simultaneous tests, requirements for continuous data review, and plant administrative requirements for authorization to proceed or continue. The test sequence identifies hold points for data review and authorization to proceed and establishes the general plant conditions for each group of tests.

14.2.4.2.3 Power Ascension Test Performance

Before starting each test, the assigned shift test engineer will review the test procedure to ensure that prerequisite activities of conditions have been satisfied as described in Section 14.2.4.3.

The test will be stopped or curtailed if it cannot be performed safely or in accordance with the approved test procedure. Required test procedure deviations or changes may be effected in accordance with PPM 1.2.3, "Use of Plant Procedures," as described in Section 14.2.4.4.2.

Should apparent deviations of test results from performance requirements or acceptance criteria be revealed, or should other apparent anomalies develop, the plant will be placed in a safe condition and relevant test data will be reviewed by the test engineer and Shift Manager. If the apparent discrepancy or anomaly is substantiated, the situation will be reviewed by the POC to ascertain if a plant safety question is involved. Control of any identified nonconformance or noncompliance will be in accordance with the plant administrative procedures.

Evaluation of the effect of the discrepancy or anomaly on plant safety will be performed at the appropriate level of review, and appropriate corrective actions will be taken before resumption of the test or test conditions at which the problem was revealed.

At the completion of an entire test procedure, the test engineer will assemble all of the data and supporting information, nonconformance documentation, and test results evaluations for review by the POC. Any data reduction or analysis required will be done as soon after the data is available as is practical so that the results of the analysis may be included in the complete test package.

Test records will be maintained as described in Section 14.2.6.

14.2.4.3 Control of Test Prerequisites

Conditions and activities prerequisite to a given test will be identified in the applicable test procedure. Prior to commencement of the particular test, the test engineer will verify that the identified prerequisites have been satisfied. The verifications will be recorded and retained as part of the test record.

The test engineer will verify that

a. The test procedure has been approved by the appropriate committee and Plant Manager, Test and Startup Manager, or Startup Superintendent as required. The test procedure is compatible with the latest versions of material referenced in the test procedure;

b. The record copy of the test procedure is identical to that contained in the master file or PPM, including the latest TWG/POC approved revisions or test procedure field changes (see Section 14.2.4.4);

c. Prerequisite tests have been completed. If TWG and/or Plant Manager approval of a completed test is also a prerequisite, that approval will have been obtained;

d. The test procedure has been made available for shift operator review and familiarization. Operator support has been scheduled, as necessary;

e. Test equipment is available or in place as required. Calibration or other readiness requirements have been completed. System instrumentation to be used in the test has been calibrated within the required time period established for surveillance testing and/or preventative maintenance; and

f. Test and operating personnel involved in the performance of the test have been briefed immediately prior to starting the test.

14.2.4.4 Modification of Test Procedures During Testing

14.2.4.4.1 System Lineup and Preoperational Test Phase

The TSPM provides a means of controlling modifications to TWG-approved test procedures during testing. This administrative procedure, contained in the CGS TSPM, applies to changes made to an approved test procedure during preoperational and startup testing. The procedure does not apply to revisions made during the preparation of test procedures.

The procedure provides control of revisions which change the intent or the acceptance criteria of the test procedure.

The required changes, when identified by the responsible test engineer, are described on a special form (Test Change Notice/Procedure Deviation Form) which identifies the affected test procedure or plant procedure, justifies the change, and contains spaces for the appropriate approvals. The Test Change Notice forms became a permanent part of the test record.

A Test Change Notice for a preoperational test is reviewed by the TWG and approved by the Test and Startup Manger, TWG Chairman.

14.2.4.4.2 Power Ascension Test Phase

All test procedure details or changes must be made in accordance with PPM 1.2.3, "Use of Plant Procedures." This process requires documentation on the required forms, signatures of authorized individuals, and subsequent full POC review. The PPM 1.2.3 forms became a permanent part of the test record.

14.2.5 REVIEW, EVALUATION, AND APPROVAL OF TEST RESULTS

14.2.5.1 Control of Test Results Review

The individuals responsible for reviewing the results of particular tests will be designated by the POC or the Test and Startup Manager. These reviews will be obtained through TWG or POC members in accordance with their represented areas of responsibility. TWG members will provide names of individuals in their represented organizations who meet the requirements of Regulatory Guide 1.58, Revision 0, for evaluation of inspection and test results.

Based on the recommendations of the qualified reviewers, the completed preoperational test will be approved by the TWG. Plant Operating Committee review and Plant Manager approval of power ascension test results is required.

14.2.5.2 Design Organization Participation in Problem Resolution

Failures of tests to meet acceptance criteria and other problems discovered in the course of testing will be documented as deficiencies in accordance with the requirements of the TSPM for System Lineup and Preoperational Tests and in accordance with PPM 1.3.12, "Plant Nonconformances," for the power ascension tests. Reports of such deficiencies will indicate the parties or organizations deemed responsible for providing an acceptable resolution of the deficiency. The responsible organization will be requested to provide a resolution of the defined problem.

Documentation of the final resolution will include the recommendation of the responsible organization and a description of the measures implemented in accordance with that recommendation. Design problems will require resolution by the appropriate Energy Northwest Technical Division Department, Project Engineering, Plant Technical Staff, or original design organization, depending on the technical nature of the problem.

14.2.5.3 Results Analysis Prerequisites to Continuation of Startup Testing

The POC will establish prerequisites for various tests, test conditions, and test phases in consideration of system or component qualification for subsequent testing. The control or prerequisites to an individual test will be as described in Section 14.2.4.3.

The POC will also require an evaluation of the data acquired during a particular test phase or plateau. The items considered in this evaluation will include, but are not limited to the following:

a. The need for additional testing or retesting to improve assurance that a particular system or component will perform as required in subsequent testing, especially under more demanding conditions such as higher power levels,

b. The need for analysis of certain data to qualify measured variables or parameters for use in subsequent measurements,

c. The completeness of testing up to the point in question as evidenced by the documentation of the completed tests, and

d. The need for specific reviews and approvals of particular sets of data to satisfy the above.

14.2.6 TEST RECORDS

14.2.6.1 System Lineup and Preoperational Test Phase

14.2.6.1.1 General

The TSPM contains a generic procedure regarding filing and recordkeeping to be applied to testing documentation. This procedure is intended to ensure compliance of Energy Northwest project startup programs with the applicable provisions of ANS N45.2.9-1974, "Requirements for Collection, Storage, and Maintenance of Nuclear Power Plant Quality Assurance Records," as required by Regulatory Guide 1.88, Revision 1, December 1975.

The following sections describe the provisions of the aforementioned procedure, which will be contained in specific detail in the CGS Test and Startup Instructions.

14.2.6.1.2 Test Record Responsibilities

The Test and Startup Manager is responsible for identifying the responsibilities, controls, and requirements for establishing and implementing a Test and Startup Program filing and recordkeeping system, in accordance with 10 CFR 50 Appendix B, ANSI N45.2.9, and the Energy Northwest Quality Assurance Program Manual. The Test and Startup Manager will ensure that adequate procedures are prepared and maintained within the Test and Startup Instructions. The Test and Startup Manager will ensure that trained and qualified personnel maintain the Test and Startup Program files.

14.2.6.1.3 Types of Documents and Records Requiring Test Record File Retention

Documentation and records that will be maintained within Test and Startup Program files are:

a. Test and Startup program records as specified by ANSI N45.2.9, and

b. All records and documents as specified by the Test and Startup Program and instruction manuals.

Other records, documents, correspondence, etc., may be maintained at the discretion and approval of the Startup Program Manager, provided their access requirements do not compromise the security of the mandatory files.

14.2.6.2 Power Ascension Test Phase

All test records and data shall be kept and filed in accordance with the PPM 1.6 series of procedures which detail the requirements for all plant recordkeeping.

14.2.7 CONFORMANCE OF TEST PROGRAMS WITH REGULATORY GUIDES

14.2.7.1 Conformance with Regulatory Guide 1.68

The CGS Test and Startup Program conforms to the requirements of Regulatory Guide 1.68, Revision 0, "Preoperational and Initial Startup Test Programs for Water-Cooled Power Reactors," except where specifically noted otherwise. The Regulatory Guide has been reviewed by Energy Northwest for applicability of individual items in the guide to CGS and its systems. The applicability to this plant has determined the nature and scope of testing to be performed. Actual exceptions to the testing required by this guide have been specifically addressed and are discussed in Section 14.2.7.2. Areas where the guide does not apply are not considered to be exceptions.

14.2.7.2 Exceptions to Regulatory Guide 1.68

The exceptions to Regulatory Guide 1.68 are listed below with an explanation of the justification for the exception.

a. Exception to Format of Test Procedures

The format of the test procedures is different from that found in Appendix C of Regulatory Guide 1.68, but the format difference is not considered an exception to the regulatory guide since the guide specifies required elements of a test procedure while merely implying but not requiring a format.

b. See Section 1.8.2 for a delineation of specific exceptions to the requirements of Regulatory Guide 1.68.

14.2.7.3 Conformance With or Exceptions to Regulatory Guides Other Than 1.68

a. Regulatory Guide 1.70, "Standard Format and Content of Safety Analysis Reports for Nuclear Power Plants" will be complied with for the section that pertains to the Test and Startup Program,

b. Regulatory Guide 1.33, "Quality Assurance Program Requirements" will be complied with in "Quality Assurance During the Operations Phase," Section 17.2, of the FSAR for the Test and Startup Program,

c. All other regulatory guides pertaining to individual testing will be complied with unless noted otherwise in Section 14.2.12, and

d. Regulatory Guide 1.58 "Qualifications of Nuclear Power Plant Inspection, Examination, and Testing Personnel." Energy Northwest Test and Startup personnel involved in testing meet the requirements of Regulatory Guide 1.58.

14.2.8 UTILIZATION OF REACTOR OPERATING AND TESTING EXPERIENCES IN THE DEVELOPMENT OF THE TEST PROGRAM

As a matter of Energy Northwest policy, a continuous program of review of reactor operating experience is coordinated by the Operations Division of Energy Northwest. The sources of information reviewed in compliance with this policy are NRC Information Notices and Bulletins, operating experience reports, preoperational test summaries and startup reports from other plants, administrative and test procedures from other plants' startup programs, personal contacts with other nuclear plant licensees or applicants, and additional information supplied by Energy Northwest Technical and Operations Division members. All available sources are

utilized; relevance to particular Energy Northwest nuclear projects is determined in the review process.

The information is reviewed by CGS Startup Program personnel for applicability to the CGS Test and Startup Program, for incorporation into test procedures, or for consideration in the administrative control of testing.

14.2.9 TRIAL USE OF PLANT OPERATING AND EMERGENCY PROCEDURES

To the extent practical throughout the preoperational and initial PATP, test procedures utilize operating, emergency, and abnormal procedures where applicable in the performance of tests. The use of these procedures is intended to do the following:

a. Prove the specific procedure or illustrate changes which may be required,
b. Provide training of plant personnel in the use of these procedures, and
c. Increase the level of knowledge of plant personnel on the systems being tested.

Test procedures may use operating, emergency, and abnormal procedures in several ways: the test procedure may reference the procedure directly; the test procedure may extract a series of steps from the procedure; the test procedure may use a combination of the first two methods; or the test procedure may require system and plant conditions that will be obtained by the use of plant operating or emergency procedures.

14.2.10 INITIAL FUEL LOADING AND INITIAL CRITICALITY

14.2.10.1 Fuel Loading and Shutdown Power Level Tests

Fuel loading and initial criticality is conducted in accordance with written procedures after all prerequisite tests are satisfactorily completed and an operating license has been issued. Prior to approving fuel loading, the plant must be verified as ready to load fuel. This verification is accomplished by the following steps, which are performed at the completion of a majority of the preoperational testing.

14.2.10.1.1 Loss of Power Demonstration-Standby Core Cooling Required

This test demonstrates the capability of each emergency diesel generator to start automatically and assumes all of its emergency core cooling loads in a loss of normal auxiliary power.

14.2.10.1.2 Cold Functional Testing

The cold functional testing defined here is an integrated system operation of various plant systems that can be operated as systems prior to fuel loading. The intent is to observe any unexpected operational problems from either an equipment or a procedural source and to

provide an opportunity for operator familiarizations with the system-operating procedures under operating conditions.

Some of the cold functional testing will be accomplished during the preoperational test program. For example, integrated and simultaneous operation of the following systems may take place during the flush of the total system: condensate system, condensate demineralizer system, low-pressure coolant injection (LPCI) system, core spray system, reactor water cleanup (RWCU) system, service water system, closed cooling water (RCC) system, and others. As required, additional integrated systems performance will be demonstrated prior to fuel loading.

14.2.10.1.3 Routine Surveillance Testing

Because of the interval between completion of a preoperational test on a system and the requirement for that system to be operated may be of considerable length, a number of routine surveillance tests must be performed prior to fuel loading and must be repeated on a routine basis. The Technical Specifications described the test frequency. In general, this Surveillance Test Program (specified in the Technical Specifications) is instituted prior to fuel loading by the plant operating staff.

14.2.10.1.4 Master Startup Checklist

A detailed list of items that must be complete, including the preoperational tests, work requests, design changes, and proper dispositioning of all exceptions noted during preoperational testing listed in Table 14.2-1 is rechecked to verify completion just prior to the final approvals for fuel loading and at each significant new step such as heat up, opening main steam isolation valves (MSIVs), and power operation.

14.2.10.1.5 Initial Fuel Loading

Fuel loading requires the movement of the full core complement of assemblies from the fuel pool to the core, with each assembly identified by number before being placed in the correct coordinate position. The procedure controlling this movement is arranged so that shutdown margin and subcritical checks are made at predetermined intervals throughout the loading, thus ensuring safe loading increments. Specially sensitive invessel neutron monitors that are maintained at the loading face as loading progresses serve to provide indication for the shutdown margin measurements, and also to allow the recording of the core flux level as each assembly is added. A complete check is made of the fully loaded core to ascertain that all assemblies are properly installed, correctly oriented, and are occupying their designated positions.

14.2.10.1.6 Zero Power Level Tests

At this point in the program, a number of tests are conducted which are best described as initial zero power level tests. Chemical and radiochemical tests are made to check the quality of the reactor water before fuel is loaded, and to establish base and background levels required to facilitate later analysis and instrument calibrations. Plant and site radiation surveys are made at specific locations for later comparison with the values obtained at the subsequent operating power levels. Shutdown margin checks are repeated for the fully loaded core, and criticality is achieved with each of the two prescribed rod sequences in turn, the data being recorded for each rod withdrawn. Each rod drive is subjected to scram and performance testing. The initial setting of the intermediate range monitors (IRMs) is at maximum gain.

14.2.10.2 Initial Heatup to Rated Temperature and Pressure

Heatup follows the satisfactory completion of the fuel loading and zero power level tests (Sections 14.2.10.1.5 and 14.2.10.1.6) and further checks are made of coolant chemistry together with radiation surveys at the selected plant locations. All control rod drives (CRDs) are scram-timed at rated temperature and pressure, with selected drives timed at two intermediate reactor pressures and for different accumulator pressures. The process computer checkout continues as more process variables become available for input. The reactor core isolation cooling (RCIC) system will complete controlled starts at low reactor pressure and at rated conditions, with testing in the quick-start mode at 150 psig and 1000 psig. Correlations are obtained between reactor vessel temperatures at several locations and the values of other process variables as heatup continues. The movements of NSSS piping in the drywell mainly as a function of expansion are recorded for comparison with design data.

14.2.10.3 Power Testing From 25% to 100% of Rated Output

The power test phase comprises the following tests, many of which are repeated several times at the different test levels; consequently, see Table 14.2-4 for the series. While a certain basic order of testing is maintained relative to power ascension, there is, nevertheless, considerable flexibility in the test sequence at a particular power level which may be used whenever it becomes operationally expedient. In no instance, however, is nuclear safety compromised.

a. Coolant chemistry tests and radiation surveys are made at each principal test level to preserve a safe and efficient power increase,

b. Selected CRDs are scram-timed at various power levels to provide a correlation with the initial data,

c. The effect of control rod movement on other parameters (e.g., electrical output, steam flow, and neutron flux level) is examined for different power conditions,

d. Following the first reasonable, accurate heat balance (25% power) the average power range monitors (APRMs) are calibrated and IRMs are reset if necessary,

e. At each major power level (25%, 60%, and 100%), the local power range monitors (LPRMs) are calibrated,

f. The APRMs are calibrated initially at each new power level and following LPRM calibration,

g. Completion of the process computer checkout is made for all variables, and the various options are compared with hand calculations as soon as significant power levels are available,

h. Further tests of the RCIC are made with and without injection into the reactor pressure vessel (RPV),

i. Collection of data from the system expansion tests is completed for those piping systems which had not previously reached full operating temperatures,

j. The axial and radial power profiles are explored fully by means of the traversing in-core probe (TIP) system at representative power levels during the power ascension, and

k. Core performance evaluations are made at all test points above the 10% power level and for selected flow transient conditions; the work involves the determination of core thermal power, maximum fuel rod surface heat flux, and minimum critical power ratio (MCPR), and other thermal parameters.

l. Overall plant stability in relation to minor perturbations is shown by the following group of tests which are made at selected test points:

1. Core power-void mode response,
2. Pressure regulator setpoint change,
3. Water level setpoint change,
4. Turbine valve surveillance, and
5. Recirculation flow setpoint change.

For the first of these tests, a centrally located control rod is moved and the flux response is noted on a selected LPRM chamber. The next two tests require that the changes made should approximate as closely as possible a step change in demand, while for the next test the turbine stop, control, and bypass valves are opened to verify stability and power level for surveillance testing. The remaining test is performed to properly adjust the control loop of the

recirculation system. For all of these tests the plant performance is monitored by recording the transient behavior of numerous process variables, the one of principal interest being neutron flux. Other imposed transients are produced by step changes in demand core flow, partial loss of feedwater heating, and simulating failure of the operating pressure regulator to permit takeover by the backup regulator. Table 14.2-3 shows the power and flow levels at which all these stability tests are performed.

m. The category of major plant transients includes full closure of all the MSIVs, fast closure of turbine generator control valves, fast closure of turbine generator stop valves, loss of the main generator and offsite power, tripping a feedwater pump, and several trips of the recirculation pumps. The plant transient behavior is recorded for each test and the results may be compared with the acceptance criteria and the predicted design performance. Table 14.2-2 shows the operating test condition for all the proposed major transients;

n. A test is made of the relief valves in which leaktightness and general operability are demonstrated;

o. At some major power levels the jet pump flow instrumentation is calibrated;

p. The as-built characteristics of the recirculation system are investigated as soon as operating conditions permit full core flow; and

q. The local control loop performance, based on the drive pump, jet pumps, and control equipment is checked.

14.2.11 TEST PROGRAM SCHEDULE

The test program schedule for preoperational and startup tests are indicated in Table 14.2-4 and Figure 14.2-4. These schedules are preliminary and will be adjusted to consider actual construction and testing progress; they are included to provide general information but are not considered to be identical to the schedules in use during the startup program. The test procedures will be made available for review at least 30 days prior to the test date or fuel load.

14.2.12 INDIVIDUAL TEST DESCRIPTIONS

14.2.12.1 Preoperational Test Procedures

The following general descriptions are the specific objectives of each preoperational test. During the final construction phase, it may be necessary to modify the preoperational test methods as operating and preoperational test procedures are developed. Consequently, methods described in the following descriptions are general, not specific.

Specific acceptance criteria for each preoperational test are in accordance with the detailed system and equipment specifications for equipment in those systems. The tests demonstrate that the installed equipment and systems perform within the limits of these specifications.

In addition to the prerequisites listed on each on the following preoperational tests, there will be electrical power available to each of the systems.

Table 14.2-1 lists the preoperational tests anticipated for this facility.

14.2.12.1.1 Reactor Feedwater System Preoperational Test

a. Purpose

To verify the operation of the reactor feedwater system, including pumps, valves, turbines, turbine auxiliaries, and turbine control systems.

b. Prerequisites

The system lineup tests have been completed, the TWG has reviewed and approved the procedure, and the Test and Startup Manager has approved the initiation of testing. The condensate system, control air system, and service water system must have a readiness verification.

c. General Test Methods and Acceptance Criteria

The performance of the reactor feedwater system is verified within the limitations of the auxiliary steam supply by the demonstration of the proper operation of the following:

1. *Valves and related controls, interlocks, and position indicators,*
2. *Reactor feedwater pumps, turbines, and auxiliaries,*
3. *Control logic, and*
4. *Annuciators and protective devices.*

14.2.12.1.2 Condensate System Preoperational Test

a. Purpose

To verify the operation of the condensate system, including pumps, valves, and control systems.

b. Prerequisites

The system lineup tests have been completed, the TWG has reviewed and approved the procedure, and the Test and Startup Manager has approved the initiation of testing. The condenser, condensate filter demineralizers, feedwater, and control air systems are capable of supporting this test as necessary.

c. General Test Methods and Acceptance Criteria

The performance of the condensate system is verified by the demonstration of the proper operation of the following:

1. Valves and related controls, interlocks, and positions indicators,
2. Condensate pumps, condensate booster pumps and auxiliaries,
3. Control logic, and
4. Annuciators and protective devices.

14.2.12.1.3 Fire Protection System Preoperational Test

a. Purpose

To verify the operation of the fire protection system including the diesel engine, pumps, valves, detection and alarm circuits, and control and instrumentation circuits. To verify the location and status of all portable equipment.

b. Prerequisites

The system lineup tests have been completed, the TWG has reviewed and approved the procedure, and the Test and Startup Manager has approved the initiation of testing. The circulating water system, control and service air system, and electrical distribution system are available to support operation.

c. General Test Methods and Acceptance Criteria

Verification of the fire protection system capability is demonstrated by the proper integrated operation of the following:

1. Diesel engine and pump operation and related control and logic,
2. Fire alarm and detection circuits,
3. Fire control panel in the main control room,
4. Deluge, wet pipe and preaction sprinkler systems, and
5. Carbon dioxide and Halon systems.

In addition, portable equipment and hose station capability will be verified.

14.2.12.1.4 Reactor Water Cleanup System Preoperational Test

a. Purpose

To verify the operation of the RWCU system, including pumps, valves, and filter/demineralizer equipment.

b. Prerequisites

The system lineup tests have been completed, the TWG has reviewed and approved the procedure, and the Test and Startup Manager has approved the initiation of testing. Filter aid, and anion and cation resin should be available. The RCC system and instrument air system must have readiness verification.

c. General Test Methods and Acceptance Criteria

Verification of the RWCU system capability is demonstrated by the proper integrated operation of the following:

1. *Drain flow regulator flow interlocks,*
2. *System isolation and logic,*
3. *Valve-operating sequence,*
4. *Pump operation and related control and logic,*
5. *Annuciators, and*
6. *Filter/demineralizer system operation.*

14.2.12.1.5 Standby Liquid Control System Preoperational Test

a. Purpose

To verify the operation of the standby liquid control (SLC) system including pumps, tanks, control, logic, and instrumentation.

b. Prerequisites

The system lineup tests have been completed, the TWG has reviewed and approved the procedure, and the Test and Startup Manager has approved the initiation of testing. Valves should be previously bench tested and other precautions relative to positive displacement pumps taken. The reactor vessel should be available for injecting demineralized water.

c. General Test Methods and Acceptance Criteria

Verification of the SLC system capability is demonstrated by the proper integrated operations of the following:

1. *SLC system tank level instrumentation,*
2. *Heaters,*
3. *Alarms and logic,*
4. *Relief valves,*
5. *Pumps and related controls and logic, and*
6. *Flow testing with different flow paths.*

14.2.12.1.6 Nuclear Boiler System Preoperational Test

a. Purpose

To verify proper operation of the nuclear boiler system including safety/relief valves (SRVs) and related controls and logic.

b. Prerequisites

The system lineup tests have been completed, the TWG has reviewed and approved the procedure, and the Test and Startup Manager has approved the initiation of testing. Verify that all SRVs have been previously bench tested.

c. General Test Methods and Acceptance Criteria

Functional and capacity tests of SRVs are not performed; verification of the NSSS capability is demonstrated by the proper integrated operation of the following:

1. *System valves and related sensors and logic,*
2. *Vacuum breaker in relief valve discharge lines,*
3. *Automatic isolation function of reactor water sample isolation valves,*
4. *Isolation and leak detection systems,*
5. *Automatic depressurization system logic,*
6. *Reactor vessel actuators accumulator capacity test,*
7. *Safety/relief valves air piston operation,*
8. *Reactor head seal leak detection, and*
9. *Alarms and annunciators.*

14.2.12.1.7 Residual Heat Removal System Preoperational Test

a. Purpose

To verify the operation of the residual heat removal (RHR) system under its various modes of operation: LPCI, shutdown cooling and vessel head spray, containment spray, and suppression pool water cooling.

b. Prerequisites

The system lineup tests have been completed, the TWG has reviewed and approved the procedure, and the Test and Startup Manager has approved the initiation of testing. The RHR service water system must have readiness verification. The reactor vessel and recirculation loops shall be intact and capable of receiving water.

c. General Test Methods and Acceptance Criteria

Verification of the RHR system capability is demonstrated by the proper integrated operation of the following:

1. System isolation valve control and logic tests,

2. RHR and RHR service water pump and motor operation, controls, and related logic features,

3. Automatic LPCI initiation logic,

4. Verification of all flow paths. The time from initiation signal to full flow should be verified, and

5. Alarms and annunciators.

14.2.12.1.8 Reactor Core Isolation Cooling System Preoperational Test

a. Purpose

To verify the operation of the RCIC system including turbine, pump, valves, instrumentation, and control.

b. Prerequisites

The system lineup tests have been completed, the TWG has reviewed and approved the procedure, and the Test and Startup Manager has approved the initiation of testing. The turbine, disconnected from the pump, shall be tested. The turbine instruction manual shall be reviewed in detail in order that precautions relative to turbine operation are followed. Then the system shall be tested within the capability of a temporary steam supply with the pump coupled to the turbine.

c. General Test Methods and Acceptance Criteria

1. All valves and related controls, interlocks, and indicators,
2. Manual and automatic initiation,
3. Automatic isolation, including leak detection system logic,
4. Turbine speed control, trip, mode selection, and test mode,
5. Barometric condenser condensate pump, and vacuum pump controls,
6. Flow path verification, and
7. Annunciators.

14.2.12.1.9 Reactor Recirculation System and Control Preoperational Test

a. Purpose

To verify the operation of the reactor recirculation system including pumps and their associated motors, valves, instrumentation, and controls. The rated conditions tests will be conducted during the startup testing program.

b. Prerequisites

The system lineup tests have been completed, the TWG has reviewed and approved the procedure, and the Test and Startup Manager has approved the initiation of testing. The RCC system must receive readiness verification. All required testing of equipment up to the operation of the recirculation pump has been completed, including recirculation pump motor (uncoupled) and all control loops.

c. General Test Methods and Acceptance Criteria

After prerequisite testing, verification of system capability is demonstrated by the proper integrated operation of the following:

1. System valves,

2. Logic and interlocks,
3. Recirculation pumps, valves, and related controls and interlocks,
4. Annunciators, and
5. Low frequency motor generator (LFMG) set.

14.2.12.1.10 Reactor Manual Control System Preoperational Test

a. Purpose

To verify the operation of the reactor manual control (RMC) system, including relays, control circuitry, switches and indicating lights, and control valves.

b. Prerequisites

The system lineup tests have been completed, the TWG has reviewed and approved the procedure, and the Test and Startup Manager has approved the initiation of testing. The CRD pump will not be operational during this test.

c. General Test Methods and Acceptance Criteria

Verification of RMC system capability is demonstrated by the proper integrated operation of the following:

1. Rod blocks, alarms, and interlocks for all modes of the reactor mode switch,

2. Rod position information system,

3. Rod drift alarm circuit, and

4. Rod directional control valve time sequence for insert and withdraw commands.

14.2.12.1.11 Control Rod Drive Hydraulic System Preoperational Test

a. Purpose

To verify the operation of the CRD hydraulic system including CRD mechanisms, hydraulic control units, hydraulic power supply, instrumentation, and controls.

b. Prerequisites

The system lineup tests have been completed, the TWG has reviewed and approved the procedure, and the Test and Startup Manager has approved the initiation of testing. The CRD manual control system preoperational test must be completed on associated CRDs. The RCC system and instrument air system must receive readiness verification.

c. General Test Methods and Acceptance Criteria

Verification of CRD system capability is demonstrated by the proper integrated operation of the following:

1. Logic and interlocks,

2. CRD pumps and related controls and interlocks,

3. Flow controller, pressure control valves, and stabilizer valves,

4. Scram discharge level switches and CRD position indication, alarms, and interlocks,

5. CRDs functional testing including latching and position indication,

6. Scram testing of control rods at atmospheric pressure, and

7. Annunciators.

14.2.12.1.12 Fuel Handling and Vessel Servicing Equipment Preoperational Test

a. Purpose

To verify the operation of the fuel handling and vessel servicing equipment including tools used in the servicing of control rods, fuel assemblies, LPRMs and dry tubes, and vacuum cleaning equipment.

b. Prerequisites

The system lineup tests have been completed, the TWG has reviewed and approved the procedure, and the Test and Startup Manager has approved the initiation of testing. Additionally, the refueling platform, fuel preparation machine, and fuel racks must be installed and operational; all slings and lifting devices must be certified at their design load, at least by the vendor.

c. General Test Methods and Acceptance Criteria

Verification of the fuel handling and vessel servicing equipment is demonstrated by dry operation of the following equipment:

1. Cell disassembly tools,

2. Channel replacement tools,

3. Instrument handling tools,

4. Vacuum cleaning equipment,

5. Interlocks and logic associated with the refueling and service platform are verified, and

6. Proper operation of refueling and service platforms are verified.

14.2.12.1.13 Low-Pressure Core Spray System Preoperational Test

a. Purpose

To verify the operation of the low-pressure core spray system (LPCS), including spray pumps, sparger ring, spray nozzles, controls, valves, and instrumentation.

b. Prerequisites

The system lineup tests have been completed, the TWG has reviewed and approved the procedure, and the Test and Startup Manager has approved the initiation of testing. The reactor vessel must be available and ready to receive water.

c. General Test Methods and Acceptance Criteria

Verification of the LPCS system capability is demonstrated by the proper integrated operation of the following:

1. Logic and interlocks,

2. Low-pressure core spray system pumps, including auto initiation,

3. *Flow path verification, including determination of system hydraulic performance to verify proper sizing of restricting orifice in LPCS discharge line to vessel (see Section 6.3.2.2.3),*

4. *Annunciators,*

5. *The time for initiation signal to full flow should be verified, and*

6. *Photographs to prove acceptability of core spray patterns.*

14.2.12.1.14 High-Pressure Core Spray System Preoperational Test

a. *Purpose*

To verify the operation of the high-pressure core spray (HPCS) system, including diesel generator and related auxiliary equipment, pumps, valves, instrumentation, and control.

b. *Prerequisites*

The system lineup tests have been completed, the TWG has reviewed and approved the procedure, and the Test and Startup Manager has approved the initiation of testing. The HPCS diesel generator must be installed and be operational.

c. *General Test Methods and Acceptance Criteria*

Verification of HPCS system capability is demonstrated by the proper integrated operation of the following:

1. *Valve controls and interlocks,*

2. *HPCS electrical system tests, including dc and ac,*

3. *HPCS diesel generator functional tests including starting, rated load, load rejection,*

4. *Pump and motor tests with normal power supply and with diesel generator,*

5. *HPCS flow path and flow rate verification,*

6. *Annunciators,*

7. The time from initiation signal to full flow should be verified, and

8. Photographs to prove acceptability of HPCS spray pattern.

14.2.12.1.15 Fuel Pool Cooling and Cleanup System Preoperational Test

a. Purpose

To verify the operation of the fuel pool cooling and cleanup system including the pumps, heat exchangers, controls, valves, and instrumentation.

b. Prerequisites

The system lineup tests have been completed, the TWG has reviewed and approved the procedure, and the Test and Startup Manager has approved the initiation of testing. The instrument air, service air, fuel pool emergency makeup, service water, and RHR systems must be available.

c. General Test Methods and Acceptance Criteria

Verification of the fuel pool system capability is demonstrated by the integrated operation of the following:

1. Logic and interlocks,
2. Interconnection to RHR system,
3. Pump operation and related controls,
4. Cleanup subsystem operation, and
5. Annunciators.

14.2.12.1.16 Leak Detection System Preoperational Test

a. Purpose

To summarize the test requirements and verify the leak detection test data for each of the nuclear systems.

b. Prerequisites

The system lineup tests have been completed, the TWG has reviewed and approved the procedure, and the Test and Startup Manager has approved the initiation of testing. The prerequisites are included in the preoperational test specifications for each of the nuclear systems listed below.

c. General Test Methods and Acceptance Criteria

As an integral part of each of the following system preoperational tests, the nuclear systems leak detection is verified by the proper operation of the leak detection features of the following nuclear systems:

1. *Feedwater control system,*
2. *RWCU system,*
3. *NSSS,*
4. *RHR system,*
5. *RCIC system,*
6. *Recirculation system, and*
7. *Radwaste system.*

14.2.12.1.17 Liquid and Solid Radwaste System Preoperational Test

a. Purpose

To verify that the radioactive waste system will perform its design functions of processing liquid and solid radioactive wastes.

b. Prerequisites

The system lineup tests have been completed, the TWG has reviewed and approved the procedure, and the Test and Startup Manager has approved the initiation of testing.

c. General Test Methods and Acceptance Criteria

Testing will demonstrate that the pumps, tanks, controls, and valves including automatic isolation, diversion and protection features, and instrumentation and alarms will operate and function in accordance with design requirements.

Testing will also verify that the CGS Process Control Program results in an acceptable waste form as required by 10 CFR 61. Simulated waste will be verified to form a free-standing monolithic solid with no free liquid prior to implementation of the solidification process on radioactive waste. Liners containing solidified waste will be inspected prior to shipment to the disposal site to verify compliance with 10 CFR 61 requirements.

14.2.12.1.18 Reactor Protection System Preoperational Test

a. Purpose

To verify the proper operation of the reactor protection system (RPS), including sensor logic and their respective scram relays, scram reset time delay, the annunciators, and motor generator set power supply.

b. Prerequisites

The system lineup tests have been completed, the TWG has reviewed and approved the procedure, and the Test and Startup Manager has approved the initiation of testing.

c. General Test Methods and Acceptance Criteria

Verification of the RPS capability is demonstrated by the proper integrated operation of the following:

1. Motor generator set performance,

2. Sensor logic and scram relay logic,

3. Scram reset time delay,

4. Sensors input-to-scram trip actuator response time on all channels of each function for which response times are required by the Technical Specifications,

5. Annunciators,

6. Mode switch tests, and

7. Auxiliary sensor operation.

The ability of the system to scram the reactor within a specified time must be demonstrated in the CRD hydraulic system preoperational test (see Section 14.2.12.1.11).

14.2.12.1.19 Neutron Monitoring System Preoperational Test

a. Purpose

To verify the operation of the neutron monitoring system (NMS) including startup, intermediate, and power range detectors, and their related equipment.

b. Prerequisites

The system lineup tests have been complete, the TWG has reviewed and approved the procedure, and the Test and Startup Manager has approved the initiation of testing. Additionally, all source range monitors (SRMs) and pulse preamplifiers, IRMs and voltage preamplifiers, and APRMs will have been calibrated according to the vendor's instructions.

c. General Test Methods and Acceptance Criteria

Verification of the NMS capability is demonstrated by the proper integrated operation of the following:

1. All SRM detectors, and their respective insert and retract mechanisms, and cables;

2. SRM channel including pulse preamp, remote meter and record, trip logic, logic bypass and related lamps and annunciators, control system interlocks, refueling instrument trips, and power supply;

3. All IRM detectors and their respective insert and retract mechanisms and cables;

4. IRM channels including voltage preamps, remote recorders, RMC system interlocks, RPS trips, annunciators and lamps, and power supplies;

5. All LPRM detectors and their respective cables, and power supplies;

6. All APRM channels including trips, trip bypasses, annunciators and lamps, remote recorders, RMC system interlocks, RPS trips, and power supplies;

7. Recirculation flow bias signal including flow unit, flow transmitters, and related annunciators, interlocks, and power supplies, and

8. Both rod block monitor (RBM) channels including trips, trip bypasses, annunciators and lamps, remote recorders, RMC system interlocks, and power supplies.

14.2.12.1.20 Traversing In-Core Probe System Preoperational Test

a. Purpose

To verify the operation of the traversing in-core probe (TIP) system including the TIP detector, controls and interlocks, containment secure lamp, and containment isolation circuits.

b. Prerequisites

The system lineup tests have been completed, the TWG has reviewed and approved the procedure, and the Test and Startup Manager has approved the initiation of testing. (Additionally, the TIP detector and dummy detector, ball valve time delay, core top and bottom limits, clutch, x-y recorder, and purge system will have been shown to be operational.)

c. General Test Methods and Acceptance Criteria

With the exception of the shear valve, which is not tested, verification of the TIP system is demonstrated by the proper integrated operation of the following:

1. Indexer cross-calibration interlock,

2. Shear valve control monitor lamp, and

3. Drive motor manual control and override, automatic control and stop, and low speed control.

14.2.12.1.21 Rod Worth Minimizer System Preoperational Test

a. Purpose

To verify the operation of the rod worth minimizer (RWM) system under its various modes of operation.

b. Prerequisites

The system lineup tests have been completed, the TWG has reviewed and approved the procedure, and the Test and Startup Manager has approved the

initiation of testing. Additionally, the rod position indication system (RPIS) will have been shown to be operational, rod sequence control (RSC) system bypassed, and computer diagnostic and special tests completed.

c. General Test Methods and Acceptance Criteria

Verification of the RWM system is demonstrated by the proper integrated operation of the following:

1. Rod test option,

2. System initialization both above and below the low power setpoints, and above and below the low power alarm points,

3. RWM program,

4. Rod withdrawal and insertion error block, and

5. Rod drift scan, and annunciation.

The RWM program acceptance of an operator-supplied rod position value must be demonstrated.

14.2.12.1.22 Process Radiation Monitoring System Preoperational Test

a. Purpose

To verify the operation of the process radiation monitoring (PRM) system, including the offgas vent, offgas, main steam line, liquid process, and building ventilation radiation monitoring subsystems.

b. Prerequisites

The system lineup tests have been completed, the TWG has reviewed and approved the procedure, and the Test and Startup Manager has approved the initiation of testing. Additionally, the process radiation monitors, pulse preamplifiers, power supplies, indicator and trip units, are calibrated. Insulation resistance and high potentiometer tests will have been completed.

c. General Test Methods and Acceptance Criteria

Verification of the PRM system is demonstrated by the proper integrated operation of the following:

1. *Vent preamps, channels, trip points, annunciators and lamps, sample rack, and check source,*

2. *Offgas vial sampler, log radiation monitor (LRM) and their related annunciators, lamps and recorders, and high/low flow detector,*

3. *Main steam and LRM channels, trip points, and annunciators and lamps, High-High and Inop trip, and recorders,*

4. *Liquid process preamps, channels, trip points, and annunciators and lamps, and recorders,*

5. *Building ventilation system sensors, channels, trip points, and annunciators and lamps, recorders, and SGTS interlock, and*

6. *Control center air monitoring sensors, channels, annunciators, and indicators.*

14.2.12.1.23 Area Radiation Monitoring System Preoperational Test

a. Purpose

To verify the operation of the area radiation monitoring (ARM) system, including channels, trip points, alarms, and recorder.

b. Prerequisites

The system lineup tests have been completed, the TWG has reviewed and approved the procedure, and the Test and Startup Manager has approved the initiation of testing. Additionally, indicator, trip units, and power supplies are calibrated.

c. General Test Methods and Acceptance Criteria

Verification of the ARM system capability is demonstrated by the proper integrated operation of the following:

1. *Monitor channels,*
2. *Channel trip points,*
3. *Alarm annunciators and lights, and*
4. *Recorder.*

14.2.12.1.24 Process Computer Interface System Preoperational Test

a. Purpose

To verify the operation of the process computer interface (PCI) system including computer inputs and printout.

b. Prerequisites

The system lineup tests have been completed, the TWG has reviewed and approved the procedure, and the Test and Startup Manager has approved the initiation of testing. Additionally, computer diagnostic checks and programming are completed.

c. General Test Methods and Acceptance Criteria

Verification of the PCI system is demonstrated by the proper integrated operation of the following:

1. *Analog input signals,*
2. *Computer printout,*
3. *Digital input signals, and*
4. *Digital output signals.*

14.2.12.1.25 Rod Sequence Control System Preoperational Test

a. Purpose

To verify the operation of the RSC system under its various modes of operation.

b. Prerequisites

The system lineup tests have been completed, the TWG has reviewed and approved the procedure, and the Test and Startup Manager has approved the initiation of testing. Additionally, the self-test feature of the RSC system is verified.

c. General Test Methods and Acceptance Criteria

Verification of the RSC system is demonstrated by the proper integrated operation of the following:

1. *Low power setpoint and low power alarm point tests,*
2. *RSC system status displays and annunciators,*
3. *Reactor mode switch test,*
4. *System diagnostic and data quality tests,*
5. *Rod position data tests,*
6. *Single rod bypass provision,*
7. *Rod sequences tests,*
8. *Rod group assignment,*
9. *Constraints of rod movement tests,*
10. *100% to 75% control rod density tests,*
11. *5% to 50% control rod density tests, and*
12. *0% control rod density to low power setpoint tests.*

14.2.12.1.26 Remote Shutdown Preoperational Test

a. Purpose

To verify the feasibility and operability of the shutdown functions from the remote shutdown panel and its ability to bring the reactor to a cold condition in an orderly fashion.

b. Prerequisites

The system lineup tests have been completed, the TWG has reviewed and approved the procedure, and the Test and Startup Manager has approved the initiation of testing. Additionally, the control power should be supplied to the remote shutdown panel, and the independence of power supply voltage, and fuses should be verified.

c. General Test Methods and Acceptance Criteria

Verification of the remote shutdown system is demonstrated by the proper integrated operation of the following tests:

1. Operation of valves, controls, instruments, and pumps on systems available from this panel, and

2. Transfer switch operation from the control room panels to the remote shutdown panel.

14.2.12.1.27 Offgas System Preoperational Test

a. Purpose

To verify the operation of the offgas system including valves, recombiner, condensers, coolers, filters, and hydrogen analyzers.

b. Prerequisites

The system lineup tests have been completed, the TWG has reviewed and approved the procedure, and the Test and Startup Manager (Assistant Plant Manager) has approved the initiation of testing. Additionally, the instrument air system, electrical power, and cooling water should be operational.

c. General Test Methods and Acceptance Criteria

Verification of the offgas system is demonstrated by the following tests:

1. Valve operation including fail safe and isolation features and valve status lights indicate the correct valve position,

2. Pump operation,

3. Level and temperature control and indication,

4. Recombiner and preheater tests,

5. Condenser, cooler, and moisture separator tests,

6. Gas dryer and cooler tests,

7. Filter efficiency,

8. Hydrogen analyzer performance test, and

9. Purge and bleed air rate test.

14.2.12.1.28 Environs Radiation Monitoring Preoperational Test

a. Purpose

To verify the operation of the environs radiation monitoring system, including dosimeters, sampling pump, and filter equipment.

b. Prerequisites

System lineup tests have been completed, the TWG has reviewed and approved the procedure, and the Test and Startup Manager has approved the initiation of testing. Additionally, indicator power supplies are calibrated according to the vendor's instruction manual.

c. General Test Methods and Acceptance Criteria

Verification of the environs radiation monitoring system capability is demonstrated by the proper operation of the following:

1. Air sample equipment, and
2. Thermoluminescent detector (TLD) (passive dosimeters).

14.2.12.1.29 Main Steam System Preoperational Test

a. Purpose

To verify the proper operation of the MSIVs and related controls.

b. Prerequisites

The system lineup tests have been completed, the TWG has reviewed and approved the procedure, and the Test and Startup Manager has approved the initiation of testing.

c. General Test Methods and Acceptance Criteria

Verification of the main steam system is demonstrated by the proper integrated operation of the following:

1. Automatic isolation of the MSIVs,

2. Minimum closing times are met,

3. MSIV accumulator capacity tests are satisfactory, and

4. Valves, heaters, blowers, and initiating logic of the MSIV leakage control system.

14.2.12.1.30 Radwaste Building Heating, Ventilating, and Air Conditioning System Preoperational Test

a. Purpose

To verify that the radwaste building heating, ventilating, and air conditioning (HVAC) system will function in accordance with the design requirements as set forth in the design specifications.

b. Prerequisites

The system lineup tests have been completed, the TWG has reviewed and approved the procedure, and the Test and Startup Manager has approved the initiation of testing. The 480-V ac power system, control air supply service air system, and the turbine service water system is capable of supporting this test as necessary.

c. General Test Methods and Acceptance Criteria

Verification of the radwaste building HVAC system is demonstrated by the proper integrated operation of the following:

1. Ventilation fans and their related controls,
2. Filters and instrumentation,
3. Dampers and controls, and
4. Annunciators and protective devices.

14.2.12.1.31 Closed Cooling Water System Preoperational Test

a. Purpose

To verify the operation of the RCC system including pumps, valves, logic, and annunciator.

b. Prerequisites

The system lineup tests have been completed, the TWG has reviewed and approved the procedure, and the Test and Startup Manager has approved the initiation of testing. The following support systems must have received readiness verifications:

1. *Control and service air (CAS/SA),*
2. *Makeup water treatment,*
3. *Essential 480-V ac power, and*
4. *Instrumentation power.*

c. General Test Methods and Acceptance Criteria

Verification of the RCC system is demonstrated by the proper integrated operation of the following:

1. *Surge tank level control,*
2. *System pumps and control logic,*
3. *Chemical addition pump and control, and*
4. *Remote-operated valves.*

14.2.12.1.32 Primary Containment Atmospheric Control System Preoperational Test (SYSTEM DEACTIVATED)

a. Purpose

To verify the operation of the primary containment atmospheric control (CAC) system including blowers, coolers, valves, instruments, and alarms.

b. Prerequisites

The system lineup tests have been completed, the TWG has reviewed and approved the procedure, and the Test and Startup Manager has approved the initiation of testing. Primary containment, essential 480-V ac power, standby

service water (SW), instrument power, and control air systems must have received readiness verification.

c. General Test Methods and Acceptance Criteria

Verification of the primary CAC system is demonstrated by the proper integrated operation of the following:

1. *Isolation and control valves,*
2. *Blowers,*
3. *Instrumentation,*
4. *Alarms, and*
5. *Recombiner components to the extent that flow paths are verified.*

Primary CAC system hydrogen/oxygen recombining performance capabilities are not demonstrated during the preoperational test.

14.2.12.1.33 Primary Containment Cooling System Preoperational Test

a. Purpose

To verify the operation of the primary containment cooling system including fans, dampers, related controls, and instrumentation.

b. Prerequisites

The system lineup tests have been completed, the TWG has reviewed and approved the procedure, and the Test and Startup Manager has approved the initiation of testing. The 480-V ac power, instrument power, and RCC systems must have received readiness verification.

c. General Test Methods and Acceptance Criteria

Verification of the primary containment cooling system is demonstrated by the proper integrated operation of the following:

1. *Fans and control logic,*
2. *Cooling coils,*
3. *Dampers, cooling water flow control valves and related controls,*
4. *Instrumentation,*
5. *Related loss-of-power logic, and*
6. *Annunciators.*

Primary containment cooling system heat removal capabilities are not demonstrated during the preoperational test.

14.2.12.1.34 Primary Containment Instrument Air Preoperational Test

a. Purpose

To verify proper operation of the containment instrument air (CIA) system, including compressors, dryers, valves, and related controls and logic.

b. Prerequisites

The system lineup tests have been completed, and the TWG has reviewed and approved the procedure, and the Test and Startup Manager has approved the initiation of testing. The plant service water supply system must receive a readiness classification.

c. General Test Methods and Acceptance Criteria

Verification of the CIA system capability is demonstrated by the proper integrated operation of the following:

1. Logic and interlocks,

2. CIA system air compressors,

3. CIA system air dryers,

4. System nonreturn check valves,

5. Alarms and controls,

6. Nitrogen backup supply, and

7. Valve/component failure modes for those valves/components supplied by the CIA system to simulated loss of air supply.

14.2.12.1.35 Primary Containment Atmospheric Monitoring System Preoperational Test

a. Purpose

To verify the capability of the primary containment atmospheric monitoring system to monitor and display containment atmospheric conditions.

b. Prerequisites

The system lineup tests have been completed, the TWG has reviewed and approved the procedure, and the Test and Startup Manager has approved the initiation of testing. Instrument power is available to system components.

c. General Test Methods and Acceptance Criteria

Verification of the primary containment atmospheric monitoring system capability is demonstrated by the proper integrated operation of the following:

1. *Samples and controls,*
2. *Analyzers,*
3. *Pressure and temperature instrumentation,*
4. *Radiation monitors,*
5. *Indicating/recording instrumentation, and*
6. *Annunciators.*

14.2.12.1.36 Standby Gas Treatment System Preoperational Test

a. Purpose

To verify the reliable operation of the standby gas treatment system (SGTS), including fans, filter trains, and related controls.

b. Prerequisites

The system lineup tests have been completed, the TWG has reviewed and approved the procedure, and the Test and Startup Manager has approved the initiation of testing. The following systems must have readiness verification:

1. *Essential 480-V ac power,*
2. *Instrument power,*
3. *Control air, and*
4. *Reactor building heating and ventilation.*

c. General Test Methods and Acceptance Criteria

Verification of the SGTS is demonstrated by the proper integrated operation of the following:

1. *SGTS fans and control logic,*

2. Filter trains and related instruments,

3. Automatic valves and control logic,

4. System interconnections to reactor building heating and ventilation and primary containment atmospheric control system, and

5. Annunciators.

14.2.12.1.37 Loss of Power and Safety Testing Preoperational Test

a. Purpose

To verify the operation of the 230/115-kV, 6.9-kV, 4.16-kV, and 480-V distribution systems.

To verify the integrated ability of the plant electrical distribution and safety systems to operate on normal and standby power sources during accident conditions.

To verify that loss of a single ac or dc distribution system division (exclusive of the HPCS diesel generator and batteries) will not prevent the remaining systems from actuating during an accident condition.

b. Prerequisites

The system lineup tests and the 69/N (N = number of diesels) consecutive starts from the emergency diesel generators have been completed, the TWG has reviewed and approved the procedure, and the Test and Startup Manager has approved the initiation of testing. The 125-V dc system and the emergency core cooling systems (ECCS) are available to support testing.

c. General Test Methods and Acceptance Criteria

Verification of the 230/115-kV, 6.9-kV, 4.16-kV, and 480-V distribution systems operability shall be demonstrated by the following:

1. Demonstration of circuit integrity and integrated operation of circuit breakers, controls and interlocks, instrumentation, automatic transfer features, and protective devices and alarms.

2. Demonstration of proper system response to a loss of the 230-kV and 115-kV distribution systems independently and simultaneously both with and without loss-of-coolant accident (LOCA)/containment isolation signals.

3. Demonstration of proper system response to a loss of the 230/115-kV distribution systems and one individual standby diesel generator during an ECCS/containment isolation actuation.

Signals for these tests shall be simulated from the actual initiating devices when this is practical.

4. Testing of the diesel generators will include the following:

(a) Sequential loading of each diesel generator unit,

(b) Maintenance of specified frequency and voltage during the loading sequence,

(c) Capability to reject and restart their largest single load any time after the design loading sequence is complete, and

(d) Capability to supply power to vital equipment during loss of station normal power conditions.

5. Electrical independence will be verified during testing by

(a) Verifying that operation of the division/equipment being tested and the nonactuation of deenergized buses/equipment does not affect the proper operation of the remaining buses/equipment.

(b) Monitoring of the major distribution buses to ensure absence of voltage.

Main power transformers supplying power from the offsite system cannot be full load tested; they are tested according to this procedure to the design emergency load. All other in-plant power sources are load tested in their individual preoperational tests.

14.2.12.1.38 Instrument Power Preoperational Test

a. Purpose

To verify the operation of the instrument power systems.

b. Prerequisites

The system lineup tests have been completed, the TWG has reviewed and approved the procedure, and the Test and Startup Manager has approved the initiation of testing.

The 125-V dc and the 480-V ac power systems are energized and capable of supplying power to the instrument power systems.

c. General Test Methods and Acceptance Criteria

Verification of the instrument power systems shall be accomplished by demonstrating circuit integrity and integrated operation of

1. *Static inverters, transformers, and buses,*
2. *Controls and interlocks,*
3. *Transfer features,*
4. *Instrumentation, and*
5. *Protective devices and alarms.*

14.2.12.1.39 Emergency Lighting System Preoperational Test

a. Purpose

To verify the operation of the emergency lighting system within the design requirements of the system.

b. Prerequisites

The system lineup tests have been completed, the TWG has reviewed and approved the procedure, and the Test and Startup Manager has approved the initiation of testing. The 125-V dc system has received a readiness verification.

c. General Test Methods and Acceptance Criteria

Verification of the emergency lighting system is to demonstrate proper automatic operation of the system and to provide sufficient lighting during loss of normal lighting.

14.2.12.1.40 Standby Alternating Current Power System Preoperational Test

a. Purpose

To verify the operation of the standby ac power system including diesel engines, auxiliaries, generators, controls, and instrumentation.

b. Prerequisites

The system lineup tests have been completed, the TWG has reviewed and approved the procedure, and the Test and Startup Manager has approved the initiation of testing.

The following support systems or components must have received readiness verification:

1. *Standby service water,*
2. *125/250-V dc power,*
3. *Instrument power, and*
4. *Essential 4160-V ac power.*

c. General Test Methods and Acceptance Criteria

Verification of the standby ac power system is demonstrated by the proper integrated operation of the following:

1. *The diesel engines and auxiliaries,*
2. *The generators, exciters, and voltage regulators,*
3. *Fuel storage and supply system,*
4. *Start and control logic circuitry and interlocks,*
5. *Protective devices,*
6. *Instrumentation, and*
7. *Annunciators.*

Testing will be performed to demonstrate the following design features.

1. *The diesel generator's performance capability to establish frequency, voltage, and load acceptance with a specified time interval on initiation of an automatic start signal under both cold and hot conditions.*

2. *Specified full- and over-load performance capabilities.*

3. *The diesel generator's capability to reject the maximum rated load without exceeding speeds or voltage which will cause tripping.*

14.2.12.1.41 250-V Direct Current Power System Preoperational Test

a. *Purpose*

To verify the operation of the 250-V dc power system including batteries, chargers, controls, interlocks, instruments, and protective devices.

b. *Prerequisites*

The system lineup tests have been completed, the TWG has reviewed and approved the procedure, and the Test and Startup Manager has approved the initiation of testing. Battery room ventilation and 480-V ac power supply to the chargers have received readiness verification.

c. *General Test Methods and Acceptance Criteria*

Verification of the 250-V dc power system is demonstrated by the proper integrated operation of the following:

1. *Battery chargers including capability to recharge the battery in accordance with Section 8.3.2.1.4.3,*

2. *Batteries (including charge and discharge rate/capacity tests and load profiles described in Table 8.3-14),*

3. *Protective relays and devices,*

4. *System control logic,*

5. *Instrumentation (including ground detection),*

6. *Breakers, and*

7. *Annunciators.*

14.2.12.1.42 125-V Direct Current Power System Preoperational Test

a. Purpose

To verify the operation of the 125-V dc power system including batteries, chargers, controls, interlocks, instruments, and protective devices.

b. Prerequisites

The system lineup tests have been completed, the TWG has reviewed and approved the procedure, and the Test and Startup Manager has approved the initiation of testing. Battery room ventilation and 480-V ac power supply to the chargers have received readiness verification.

c. General Test Methods and Acceptance Criteria

Verification of the 125-V dc power system is demonstrated by the proper integrated operation of the following:

1. Battery chargers including capability to recharge the battery in accordance with Section 8.3.2.1.1.3,

2. Batteries (including charge and discharge rate/capacity tests and load profiles described in Tables 8.3-11 and 8.3-12),

3. Protective relays and devices,

4. System control logic,

5. Instrumentation (including ground detection),

6. Breakers, and

7. Annunciators.

14.2.12.1.43 24-V Direct Current Power System Preoperational Test

a. Purpose

To verify the operation of the 24-V dc power system.

b. Prerequisites

The system lineup tests have been completed, the TWG has reviewed and approved the procedure, and the Test and Startup Manager has approved the initiation of testing.

c. General Test Methods and Acceptance Criteria

Verification of the 24-V dc power system shall include demonstrations of battery capacity and battery charger capabilities described in Section 8.3.2.1.3.3.

14.2.12.1.44 Plant Service Water System Preoperational Test

a. Purpose

To demonstrate the proper operation of the plant service water system, including pumps, valves, and related controls.

b. Prerequisites

The system lineup tests have been completed, the TWG has reviewed and approved the procedure, and the Test and Startup Manager has approved the initiation of testing.

The following support systems or components must have received readiness verification:

1. *4160-V ac power,*
2. *480-V ac power,*
3. *Instrument power,*
4. *Service water pump house structure,*
5. *Various heat exchangers or coolers utilizing service water, and*
6. *Tower makeup (TMU).*

c. General Test Methods and Acceptance Criteria

Verification of the plant service water system is demonstrated by the proper operation and performance of the service water pumps, the operation of filters, remote-operated valves, related controls, and instrumentation.

14.2.12.1.45 Standby Service Water System Preoperational Test

a. Purpose

To verify the proper operation of the SW system for normal and abnormal plant operating modes.

b. Prerequisites

The system lineup tests have been completed, the TWG has reviewed and approved the procedure, and the Test and Startup Manager has approved the initiation of testing. The following support systems or components must have received readiness verification:

1. Essential 4160-V ac power,
2 Instrument power,
3. Control air,
4. Standby service water pump house structure,
5. Various heat exchangers or coolers utilizing SW, and
6. Tower makeup (TMU).

c. General Test Methods and Acceptance Criteria

Verification of this system is demonstrated by the proper integrated operation and performance of the following:

1. Pumps and related controls,

2. Remote-operated valves and controls,

3. Automatic-operated valves and control logic,

4. Instrumentation,

5. Annunciators,

6. Standby service water system control logic response to a simulated loss of normal station power event,

7. Pumps net positive suction head (NPSH) adequate and no vortexing,

8. Proper operation of basin siphon cross connection, and

9. The preoperational test program includes tests to confirm the performance characteristics of the spray ponds (see Section 9.2.5).

14.2.12.1.46 Plant Communications System Preoperational Test

a. Purpose

To demonstrate that the plant communications and evacuation alarm system will provide effective communication between various plant locations and to verify proper operation of the emergency evacuation alarm components and system.

b. Prerequisites

The system lineup tests have been completed, the TWG has reviewed and approved the procedure, and the Test and Startup Manager has approved the initiation of testing.

c. General Test Methods and Acceptance Criteria

Proper operation of all the communication system components and the emergency evacuation alarm system and components will be demonstrated.

14.2.12.1.47 Reactor Building Emergency Cooling System Preoperational Test

a. Purpose

To demonstrate the proper integrated operation of the reactor building emergency equipment cooling system including fans, cooling coils, instrumentation, and controls.

b. Prerequisites

The system lineup tests have been completed, the TWG has reviewed and approved the procedure, and the Test and Startup Manager has approved the initiation of testing. The following support systems or components must have received readiness verification:

1. Electrical power to motors, control circuits, and instrumentation, and
2. Standby service water system.

c. General Test Methods and Acceptance Criteria

Verification of this system is demonstrated by the proper integrated operation of the fan coil units, their associated controls, interlocks, and annunciators.

14.2.12.1.48 Control, Cable, and Critical Switchgear Rooms Heating, Ventilating, and Air Conditioning System Preoperational Test

a. Purpose

To verify that the control, cable, and critical switchgear rooms HVAC systems will function in accordance with the design requirements as set forth in the design specifications.

b. Prerequisites

The system lineup tests have been completed, the TWG has reviewed and approved the procedure, and the Test and Startup Manager has approved the initiation of testing. The following support systems have received readiness verification:

1. 480-V ac power,
2. Instrument power, and
3. Chilled water.

c. General Test Methods and Acceptance Criteria

Verification of the control, cable, and critical switchgear rooms HVAC system is demonstrated by the proper integrated operation of the following:

1. Supply and exhaust fans and their related controls,
2. Filters, dampers, valves, and related instrumentation and control logic,
3. Coolers, and
4. Annunciators.

14.2.12.1.49 Standby Service Water Pump House Heating and Ventilating System Preoperational Test

a. Purpose

To verify that the SW pump house heating and ventilating system will function in accordance with the design requirements as set forth in the design specifications.

b. Prerequisites

The system lineup tests have been completed, the TWG has reviewed and approved the procedure, and the Test and Startup Manager has approved the initiation of testing. The 480-V ac power system must have received readiness verification.

c. General Test Methods and Acceptance Criteria

Verification of the SW pump house heating and ventilating system is demonstrated by the proper integrated operation of the following:

1. Ventilation fans and their related controls,
2. Filters and instrumentation,
3. Dampers and controls, and
4. Annunciators.

14.2.12.1.50 Reactor Building Crane Preoperational Test

a. Purpose

To verify the operation of the reactor building crane.

b. Prerequisites

The system lineup tests have been completed, the TWG has reviewed and approved the procedure, and the Test and Startup Manager has approved the initiation of testing. Construction load tests of 125% static and 100% operational are complete.

Contractor use of the reactor building crane for construction purposes is complete.

c. General Test Methods and Acceptance Criteria

Verification of the reactor building crane is demonstrated by the proper integrated operation of the following:

1. Crane traverse components,
2. Hook traverse and hoist components,
3. Controls and indicators,

4. Safety devices, and
5. Instrumentation.

14.2.12.1.51 Primary Containment Integrated Leak Rate Preoperational Test

a. Purpose

To verify overall primary containment integrity by pressurizing to specified test pressures and conducting integrated leak rate measurements.

b. Prerequisites

The system lineup tests have been completed, the TWG has reviewed and approved the procedure, and the Test and Startup Manager has approved the initiation of testing. The following supporting activities, systems, or components must have been completed or received readiness verification:

1. All type B and C local leak testing completed, documented, and verified as a system lineup test; see Section 6.2.6.1,

2. All containment isolation valves fully operable and closed in the normal manner,

3. All containment-associated piping hangers, supports, restraints, and anchors have been installed and properly set,

4. Residual heat removal and core spray systems preoperational tests complete, and

5. A containment area survey completed to locate, isolate, or remove any instrumentation, light bulbs, etc., which may be damaged by high external pressure.

c. General Test Methods and Acceptance Criteria

Verification of primary containment integrity is demonstrated by pressurizing to the required test pressure. See Section 6.2.6.1 for a detailed test description.

The drywell-wetwell leakage test will be performed as part of this test to verify the acceptance criteria described in Section 3.8.3.7.

14.2.12.1.52 Secondary Containment Integrated Leak Rate Preoperational Test

a. Purpose

To verify overall secondary containment integrity by subjecting the reactor building to a specified negative pressure and measuring the inleakage.

b. Prerequisites

The system lineup tests have been completed, the TWG has reviewed and approved the procedure, and the Test and Startup Manager has approved the initiation of testing. The following supporting activities or systems/components must have been completed or received readiness verification:

1. Reactor building structure complete with personnel and vehicle air lock (railroad bay) doors installed and operable,

2. Reactor building conduit, pipe, and other structural penetrations sealed, and

3. Standby gas treatment system.

c. General Test Methods and Acceptance Criteria

Verification of secondary containment integrity is demonstrated by operating the SGTS at a specific capacity while maintaining the reactor building internal structure at a specified negative pressure.

14.2.12.1.53 Diesel Generator Building Heating and Ventilating System Preoperational Test

a. Purpose

To verify that the diesel generator building heating and ventilating system will function in accordance with the design requirements as set forth in the design specifications.

b. Prerequisites

The system lineup tests have been completed, the TWG has reviewed and approved the procedure, and the Test and Startup Manager has approved the initiation of testing. The 480-V ac power system must have received readiness verification.

c. General Test Methods and Acceptance Criteria

Verification of the diesel generator building heating and ventilating system is demonstrated by the proper integrated operation of the following:

1. Ventilation fans and their related controls,
2. Filters and instrumentation,
3. Dampers and controls, and
4. Annunciators.

14.2.12.1.54 Seismic Monitoring System Preoperational Test

a. Purpose

To verify the operation of the seismic monitoring system.

b. Prerequisites

The system lineup tests have been completed, the TWG has reviewed and approved the procedure, and the Test and Startup Manager has approved the initiation of testing.

c. General Test Methods and Acceptance Criteria

Verification of the seismic monitoring system is demonstrated by the proper integrated operation of the following:

1. Annunciators, and
2. Instrumentation.

14.2.12.2 General Discussion of Startup Tests

All those tests comprising the startup test phase (Table 14.2-4) are discussed in this section. For each test a description is provided for test purpose, test prerequisites, test description, and statement of test acceptance criteria, where applicable.

In describing the purpose of a test, an attempt is made to identify those operating and safety-oriented characteristics of the plant which are being explored.

Where applicable, a definition of the relevant acceptance criteria for the test is given and is designated either Level 1 or Level 2. A Level 1 criterion normally relates to the value of a process variable assigned in the design of the plant, components, systems, or associated

equipment. If a Level 1 criterion is not satisfied, the plant will be placed in a suitable hold-condition until resolution is obtained. Tests compatible with this hold-condition may be continued. Following resolution, applicable tests must be repeated to verify that the requirements of the Level 1 criterion are now satisfied.

A Level 2 criterion is associated with expectations relating to the performance of systems. If a Level 2 criterion is not satisfied, operating and testing plans would not necessarily be altered. Investigations of the measurements and of the analytical techniques used for the predictions would be started.

For transients involving oscillatory response, the criteria are specified in terms of decay ratio (defined as the ratio of successive maximum amplitudes of the same polarity). The decay ratio must be less than unity to meet a Level 1 criterion and less than 0.25 to meet a Level 2 criterion.

14.2.12.3 Startup Test Procedures

14.2.12.3.1 Test Number 1 - Chemical and Radiochemical

14.2.12.3.1.1 Purpose. The principal objectives of this test are to (a) secure information on the chemistry and radiochemistry of the reactor coolant, and (b) determine that the sampling equipment, procedures, and analytic techniques are adequate to supply the data required to demonstrate that the chemistry of all parts of the entire reactor system meet specifications and process requirements.

Specific objectives of the test program include evaluation of fuel performance, evaluations of demineralizer operations by direct and indirect methods, measurements of filter performance, confirmation of condenser integrity, demonstration of proper steam separator-dryer operation, measurement and calibration of the offgas system, and calibration of certain process instrumentation. Data for these purposes is secured from a variety of sources: plant operating records, regular routine coolant analysis, radiochemical measurements of specific nuclides, and special chemical tests.

14.2.12.3.1.2 Prerequisites. The preoperational tests have been completed, reviewed by POC, and the Plant Manager has approved the test procedures and initiation of testing. Instrumentation has been checked or calibrated as appropriate.

14.2.12.3.1.3 Description. Prior to fuel loading a complete set of chemical and radiochemical samples will be taken to ensure that all required sample stations are functioning properly and to determine initial concentrations. Subsequent to fuel loading during reactor heatup and at each major power level change, samples will be taken and measurements will be made to determine the chemical and radiochemical quality of reactor water and reactor

feedwater, amount of radiolytic gas in the steam, gaseous activities leaving the air ejectors, decay times in the offgas lines and performance of filters and demineralizers.

Calibrations will be made of monitors in the stack, liquid waste system, and liquid process lines.

14.2.12.3.1.4 Criteria.

Level 1

Chemical factors defined in the Technical Specifications and Fuel Warranty must be maintained within the limits specified.

The activity of gaseous liquid effluents must conform to license limitations.

Water quality must be known at all times and should remain within the guidelines of the Water Quality Specifications.

Level 2

Not applicable.

14.2.12.3.2 Test Number 2 - Radiation Measurements

14.2.12.3.2.1 Purpose. The purposes of this test are to (a) determine the background radiation levels in the plant environs prior to operation for base data on activity buildup, and (b) monitor radiation at selected power levels to ensure the protection of personnel during plant operation.

14.2.12.3.2.2 Prerequisites. The preoperational tests have been completed, reviewed by POC, and the Plant Manager has approved the test procedures and initiation of testing. Instrumentation has been checked or calibrated as appropriate.

14.2.12.3.2.3 Description. A survey of natural background radiation throughout the plant site will be made prior to fuel loading. Subsequent to fuel loading, during reactor heatup and at nominal power levels of 25%, 60%, and 100% of rated power, gamma dose rate measurements and where appropriate, neutron dose rate measurements will be made at significant locations throughout the plant. All potentially high radiation areas will be surveyed.

14.2.12.3.2.4 Criteria.

Level 1

The radiation doses of plant origin and the occupancy times of personnel in radiation zones shall be controlled consistent with the guidelines of the Standards for Protection Against Radiation outlined in 10 CFR 20 and the NRC General Design Criteria in 10 CFR 50, Appendix A.

Level 2

Not applicable.

14.2.12.3.3 Test Number 3 - Fuel Loading

14.2.12.3.3.1 Purpose. The purpose of this test is to load fuel safely and efficiently to the full core size.

14.2.12.3.3.2 Prerequisites. The preoperational tests have been completed, reviewed by POC, and the Plant Manager has approved the test procedures and initiation of testing. Also the following prerequisites will be met prior to commencing fuel loading to ensure that this operation is performed in a safe manner:

a. The status of all systems required for fuel loading will be specified and will be in the status required;

b. Fuel and control rod inspections will be complete. Control rods will be installed and tested;

c. At least three movable neutron detectors will be calibrated and operable. At lease three neutron detectors will be connected to the high flux scram trips. They will be located so as to provide acceptable signals during fuel loading;

d. Nuclear instruments will be source checked with a neutron source prior to loading or resumption if sufficient delays are incurred;

e. The status of secondary containment will be specified and established;

f. Reactor vessel status will be specified relative to internal component placement and this placement established to make the vessel ready to receive fuel;

g. Reactor vessel water level will be established and minimum level prescribed;

h. The standby liquid control system will be operable and in readiness;

i. Fuel handling equipment will have been checked and dry runs completed;

j. The status of protection systems, interlocks, mode switches, alarms, and radiation protection equipment will be prescribed and verified. The high flux trip points will be set for a relatively low power level;

k. Water quality must meet required specifications; and

l. A neutron source will be installed near the center of the core.

14.2.12.3.3.3 Description. Prior to fuel loading, control rods and neutron sources and detectors will be installed and tested. Fuel loading will begin at the center of the core and will proceed radially to the fully loaded configuration.

Control rod functional tests, subcriticality checks, and shutdown margin demonstrations will be performed periodically during the loading.

14.2.12.3.3.4 Criteria.

Level 1

The partially loaded core must be subcritical by at least 0.38% $\Delta k/k$ with the analytically strongest rod fully withdrawn.

Level 2

Not applicable.

14.2.12.3.4 Test Number 4 - Full Core Shutdown Margin

14.2.12.3.4.1 Purpose. The purpose of this test is to demonstrate that the reactor will be subcritical throughout the first fuel cycle with any single control rod fully withdrawn.

14.2.12.3.4.2 Prerequisites. The preoperational tests have been completed, reviewed by POC, and the Plant Manager has approved the test procedures and initiation of testing. Also the following prerequisites will be complete prior to performing the full core shutdown margin test:

a. The predicted critical rod position is available,

b. The standby liquid control system is available,

c. Nuclear instrumentation is available with neutron count rate of at least 0.5 counts per sec and signal to noise ratio greater than two, and

d. High-flux scram trips are set conservatively low.

14.2.12.3.4.3 Description. This test will be performed in the fully loaded core in the xenon-free condition. The shutdown margin test will be performed by withdrawing the control rods from the all-rods-in configuration until criticality is reached. If the highest worth rod will not be withdrawn in sequence, other rods may be withdrawn providing that the reactivity worth is equivalent. The difference between the measure K_{eff} and the calculated K_{eff} for the in sequence critical will be applied to the calculated value to obtain the true shutdown margin.

14.2.12.3.4.4 Criteria.

Level 1

The shutdown margin of the fully loaded, cold (68°F or 20°C), xenon-free core occurring at the most reactive time during the cycle must be at least 0.38% Δk/k with the analytically strongest rod (or its reactivity equivalent) withdrawn. If the shutdown margin is measured at some time during the cycle other than the most active time, compliance with the above criterion is shown by demonstrating that the shutdown margin is 0.38% Δk/k plus an exposure dependent correction factor which corrects the shutdown margin at that time to the minimum shutdown margin.

Level 2

Criticality should occur within ±1% Δk/k of the predicted critical (predicted critical to be determined later).

14.2.12.3.5 Test Number 5 - Control Rod Drive System

14.2.12.3.5.1 Purpose. The purposes of the CRD system test are to (a) demonstrate that the CRD system operates properly over the full range of primary coolant temperatures and pressures from ambient to operating, and (b) determine the initial operating characteristics of the entire CRD system.

14.2.12.3.5.2 Prerequisites. The preoperational tests have been completed, reviewed by POC, and the Plant Manager has approved the test procedures and initiation of testing. The RMC system preoperational testing must be completed on CRDs being tested. The reactor vessel, RCC system, condensate supply system, and instrument air system must be operational to the extent required to conduct the test.

14.2.12.3.5.3 Description. The CRD tests performed during the startup test program are designed as an extension of the tests performed during the preoperational CRD system tests. Thus, after it is verified that all CRDs operate properly when installed, they are tested periodically during heatup to ensure that there is not significant binding caused by thermal expansion of the core components.

		Test Conditions			
		Reactor Pressure with Core Loaded			
	Accumulator	*psig (kg/cm²)*			
Action	*Pressure*	*0*	*600 (42.2)*	*800 (56.2)*	*Rated*
Position indication		*All*			
Normal stroke times insert/withdraw		*All*			*4**
Coupling		*All***			*4**
Friction		*All*			*4**
Scram	*Normal*	*All*	*4**	*4**	*All*
Scram	*Minimum*	*4**			
Scram	*Zero*				*4**
Scram	*Normal*				*4****

NOTE: Single CRD scrams should be performed with the charging valve closed. (Do not ride the charging pump head.)

** Refers to four CRDs selected for continuous monitoring based on slow normal accumulator pressure scram times, or unusual operating characteristics, at zero reactor pressure or rated reactor pressure when this data is available. The "four selected CRDs" must be compatible with the RWM, RSC system, and CRD sequence requirements.*

*** Established initially that this check is normal operating procedures.*

**** Scram times of the four slowest CRDs (based on scram data at rated pressure will be determined at test condition 2, 3, and 6 during planned reactor scram).*

14.2.12.3.5.4 Criteria.

Level 1

a. *Each CRD must have a normal withdraw speed less than or equal to 3.6 in./sec (9.14 cm/sec), indicated by a full 12-ft stroke in greater than or equal to 40 sec.*

b. *The mean scram time of all operable CRDs with functioning accumulators must not exceed the following times (scram time is measured from the time the pilot scram valve solenoids are deenergized):*

Position Inserted From Fully Withdrawn	*Scram Time (sec)*
45	*0.430*
39	*0.868*
25	*1.936*
05	*3.497*

c. *The mean scram time of the three fastest CRDs in a two-by-two array must not exceed the following times (scram time is measured from the time the pilot scram valve solenoids are deenergized):*

Position Inserted From Fully Withdrawn	*Scram Time (sec)*
45	*0.455*
39	*0.920*
25	*2.052*
05	*3.706*

Level 2

a. *Each CRD must have normal insert or withdraw speed of 3.0 ± 0.6 in./sec (7.62 ± 1.52 cm/sec), indicated by a full 12-ft stroke in 40 to 60 sec.*

b. *With respect to the CRD friction tests, if the differential pressure variation exceeds 15 psid (1.1 kg/cm^2) for a continuous drive in, a settling test must be performed, in which case the differential settling pressure should not be less than 30 psid (2.1 kg/cm^2) nor should it vary by more than 10 psid (0.7 kg/cm^2) over a full stroke.*

Level 3

a. On receipt of a simulated or actual scram signal (maximum error), the flow control valve must close to its minimum position within 10 sec to 30 sec.

b. The CRD system flow should not change by more than ± 3.0 gpm as reactor pressure varies from 0 to rated pressure.

c. The decay ratio of any oscillatory controlled variable must be ≤0.25 for any flow setpoint changes or for system disturbances caused by the CRDs being stroked.

14.2.12.3.6 Test Number 6 - Source Range Monitor Performance and Control Rod Sequence

14.2.12.3.6.1 Purpose. The purpose of this test is to demonstrate that the operational sources, SRM instrumentation, and rod withdrawal sequences provide adequate information to achieve criticality and increase power in a safe and efficient manner. The effect of typical rod movements on reactor power will be determined.

14.2.12.3.6.2 Prerequisites. The preoperational tests have been completed, reviewed by POC, and the Plant Manager has approved the test procedures and initiation of testing. The CRD system must be operational.

14.2.12.3.6.3 Description. Source range monitor count-range data will be taken during rod withdrawals to critical and compared with stated criteria on signal count-to-noise count ratio.

A withdrawal sequence has been calculated which completely specifies control rod withdrawals from the all-rods-in condition to the rated power configuration. Critical rod patterns will be recorded periodically as the reactor is heated to rated temperature.

Movement of rods in a prescribed sequence is monitored by the rod control and information system, which will prevent out of sequence withdrawal. Also not more than two rods may be inserted out of sequence.

As the withdrawal of each rod group is completed during the power ascension, the electrical power, steam flow, control valve position, and APRM response will be recorded.

14.2.12.3.6.4 Criteria.

Level 1

There must be a neutron signal-to-noise ratio of at least 2 to 1 on the required operable SRMs or fuel loading chambers.

There must be a minimum count rate of 0.5 counts/sec on the required operable SRMs or fuel loading chambers.

The IRMs must be on scale before the SRMs exceed the rod block setpoint.

Level 2

Not applicable.

14.2.12.3.7 Test Number 7

Not applicable.

14.2.12.3.8 Test Number 8

Not applicable.

14.2.12.3.9 Test Number 9

See test number 16B in Section 14.2.12.3.16.2.

14.2.12.3.10 Test Number 10 - Intermediate Range Monitor System Performance

14.2.12.3.10.1 Purpose. The purpose of this test is to adjust the IRM system to obtain an optimum overlap with the SRM and APRM systems.

14.2.12.3.10.2 Prerequisites. The preoperational tests have been completed, reviewed by POC, and the Plant Manager has approved the test procedures and initiation of testing. All SRMs and pulse preamplifiers, IRMs and voltage preamplifiers, and APRMs have been calibrated in accordance with the vendor's instructions.

14.2.12.3.10.3 Description. Initially the IRM system is set to maximum gain. After the APRM calibration, the IRM gains will be adjusted to optimize the IRM overlap with the SRMs and APRMs.

14.2.12.3.10.4 Criteria.

Level 1

Each IRM channel must be on scale before the SRMs exceed their rod block setpoint. Each APRM must be on scale before the IRMs exceed their rod block setpoint.

Level 2

Each IRM channel must be adjusted so that a half decade overlap with the SRMs and one decade overlap with the APRMs are ensured.

14.2.12.3.11 Test Number 11 - Local Power Range Monitor Calibration

14.2.12.3.11.1 Purpose. The purpose of this test is to calibrate the LPRM system.

14.2.12.3.11.2 Prerequisites. The preoperational tests have been completed, reviewed by POC, and the Plant Manager has approved the test procedures and initiation of testing. Instrumentation for calibration has been checked and installed.

14.2.12.3.11.3 Description. The LPRM channels will be calibrated to make the LPRM readings proportional to the neutron flux in the LPRM water gap at the chamber elevation. Calibration factors will be obtained through the use of either an off-line or a process computer calculation that relates the LPRM reading to average fuel assembly power at the chamber height.

14.2.12.3.11.4 Criteria.

Level 1

Not applicable.

Level 2

Each LPRM reading will be within 10% of its calculated value.

14.2.12.3.12 Test Number 12 - Average Power Range Monitor Calibration

14.2.12.3.12.1 Purpose. The purpose of this test is to calibrate the APRM system.

14.2.12.3.12.2 Prerequisites. The preoperational tests have been completed, reviewed by POC, and the Plant Manager has approved the test procedures and initiation of testing. Instrumentation for calibration has been checked and installed.

14.2.12.3.12.3 Description. A heat balance will generally be made each shift and after each major power level change. Each APRM channel reading will be adjusted to be consistent with the core thermal power as determined from the heat balance. During heatup a preliminary calibration will be made by adjusting the APRM amplifier gains so that the APRM readings agree with the results of a constant heatup rate heat balance. The APRMs should be recalibrated in the power range by a heat balance as soon as adequate feedwater indication is

available. Recalibration of the APRM system will not be necessary from safety considerations if at least two APRM channels per RPS trip circuit have readings greater than or equal to core power.

14.2.12.3.12.4 Criteria.

Level 1

The APRM channels must be calibrated to read equal to or greater than the actual core thermal power.

Technical Specifications and Fuel Warranty Limits on APRM scram and rod block shall not be exceeded.

In the startup mode, all APRM channels must produce a scram at less than or equal to 15% of rated thermal power.

Level 2

If the above criteria are satisfied then the APRM channels will be considered to be reading accurately if they agree with the heat balance or the minimum value required based on peaking factor maximum linear heat generation rate (MLHGR) and fraction of rated power to within (+7, -0)% of rated power.

14.2.12.3.13 Test Number 13 - Process Computer

14.2.12.3.13.1 Purpose. The purpose of this test is to verify the performance of the process computer under plant operating conditions.

14.2.12.3.13.2 Prerequisites. The preoperational tests have been completed, reviewed by POC, and the Plant Manager has approved the test procedures and initiation of testing. Computer diagnostic testing has been completed. Construction and construction testing on each input instrument and its cabling has been completed.

14.2.12.3.13.3 Description. Computer system program verifications and calculational program validations at static and at simulated dynamic input conditions will be preoperationally tested at the computer supplier's site and following delivery to the plant site. Following fuel loading, during plant heatup and the ascension to rated power, the NSSS and the balance-of-plant system process variables sensed by the computer as digital or analog signals will become available. Verify that the computer is receiving correct values of NSSS process variables and that the results of performance calculations of the NSSS is correct. At steady-state power conditions the dynamic system test case will be performed.

As discussed in Test 19 the BUCLE offline computation system will be used to evaluate core performance until the process computer performance is verified. A manual computation method is available at the site if both the process computer and BUCLE are not available.

14.2.12.3.13.4 Criteria.

Level 1

Not applicable.

Level 2

Programs OD-1, P1, and OD-6 will be considered operational when

a. The MCPR calculated by BUCLE and the process computer either

1. Are in the same fuel assembly and do not differ in value by more than 2%, or

2. For the case in which the MCPR calculated by the process computer is in a different assembly than that calculated by BUCLE, for each assembly, the MCPR and CPR calculated by the two methods shall agree within 2%.

b. The MLHGR calculated by BUCLE and the process computer either

1. Are in the same fuel assembly and do not differ in value by more than 2%, or

2. For the case in which the MLHGR calculated by the process computer is in a different assembly than that calculated by BUCLE, for each assembly, the MLHGR and LHGR calculated by the two methods shall agree within 2%.

c. The maximum average planar linear heat generation rate (MAPLHGR) calculated by BUCLE and the process computer either

1. Are in the same fuel assembly and do not differ in value by more than 2%, or

2. For the case in which the MAPLHGR calculated by the process computer is in different assembly than that calculated by BUCLE, for each

assembly, the MAPLHGR and APLHGR calculated by the two methods shall agree within 2%.

d. The LPRM gain adjustment factors calculated by BUCLE and the process computer agree to within 2%.

e. The remaining programs will be considered operational on successful completion of the static and dynamic testing.

14.2.12.3.14 Test Number 14 - Reactor Core Isolation Cooling System

14.2.12.3.14.1 Purpose. The purpose of this test is to verify the proper operation of the RCIC system over its expected operating pressure range.

14.2.12.3.14.2 Prerequisites. The preoperational tests have been completed, reviewed by POC, and the Plant Manager has approved the test procedures and initiation of testing.

14.2.12.3.14.3 Description. The RCIC system test consists of two parts: Injection to the condensate storage tank and injection to the reactor vessel. The initial condensate storage tank (CST) injections consist of manual and automatic starts at 150 psi and at rated reactor pressure. The pump discharge pressure during these tests is throttled to 100 psi above reactor pressure. This initial testing is done to demonstrate system operability and making initial controller adjustments. This is followed by vessel injections beginning with cold RCIC hardware; "cold" being defined as a minimum of 3 days without any kind of RCIC operation.

The vessel injections verify the adequacy of the startup transient and also include steady-state controller adjustments. Five consecutive successful system initiations starting from cold condition and with the same equipment settings are necessary to demonstrate system reliability. Two of these initiations are vessel injection tests with one performed using the controllers on the remote shutdown panel.

After final controller settings are determined, three CST injections at rated pressure and/or 150 psig pressure are done with initially cold RCIC equipment. These runs provide a bench mark for future surveillance testing and provide further assurance of system reliability.

A demonstration of extended operation of 30 minutes of continuous running until pump and turbine oil temperature is stabilized is scheduled at a convenient time during the test program, probably in conjunction with one of the system reliability tests. During this demonstration, automatic RCIC suction transfer from the CST to the suppression pool will be performed to confirm system stability in this configuration.

During vessel injections all reactor steam is routed to the turbine bypass valves. The steam admission valves of the main and feedwater turbines should be closed whenever the moisture carryover threshold is reached.

14.2.12.3.14.4 Criteria.

Level 1

The average pump discharge flow must be equal to or greater than 600 gpm after 30 sec have elapsed from automatic initiation at any reactor pressure between 150 psig and rated.

The RCIC turbine must not trip off or isolate during auto or manual start tests.

If any Level 1 criteria are not met, the reactor operation will be restricted to the power level defined by Figure 14.2-5. This restriction is in addition to any restrictions defined by the Technical Specifications.

Level 2

The turbine gland seal condenser system shall be capable of preventing steam leakage to the atmosphere.

The differential pressure switch for the RCIC steam supply line high flow isolation trip shall be adjusted to actuate at the valve specified in the Technical Specifications (about 300%).

The speed and flow control loops shall be adjusted so that the decay ratio of any RCIC system related variable is not greater than 0.25.

To provide an overspeed trip avoidance margin, the transient start first and subsequent speed peaks shall not exceed 5% above the rated RCIC turbine speed.

14.2.12.3.15 Test Number 15

Not applicable.

14.2.12.3.16 Test Numbers 16A and 16B

14.2.12.3.16.1 Test Number 16A - Selected Process Temperatures.

14.2.12.3.16.1.1 Purpose. The purpose of this test is to (a) ensure that the measured bottom head drain temperature corresponds to bottom head coolant temperature during normal operations, (b) identify any reactor operating modes that cause temperature stratification, (c) determine the proper setting of the low flow control limiter for the recirculation pumps to

avoid coolant temperature stratification in the RPV bottom head region, and (d) familiarize the plant personnel with the temperature differential limitations of the reactor system.

14.2.12.3.16.1.2 Prerequisites. The preoperational tests have been completed, reviewed by POC, and the Plant Manager has approved the test procedures and initiation of testing.

14.2.12.3.16.1.3 Description. The adequacy of bottom drain line temperature sensors will be determined by comparing it with recirculation loop coolant temperature when core flow is 100% of rated.

During initial heatup while at hot standby conditions, the bottom drain line temperature, recirculation loop suction temperature, and applicable reactor parameters are monitored as the recirculation flow is slowly lowered to either minimum stable flow or the low recirculation pump speed minimum valve position, whichever is the greater. The effects of cleanup flow will be investigated as operational limits allow. Using this data it can be determined whether coolant temperature stratification occurs and if so, what minimum recirculation flow will prevent it.

Monitoring the preceding information during planned pump trips will determine if temperature stratification occurs in the idle recirculation loops or in the lower plenum when one or more loops are inactive.

All data will be analyzed to determine if changes in operating procedures are required.

14.2.12.3.16.1.4 Criteria.

Level 1

a. The reactor recirculation pumps shall not be started nor flow increased unless the coolant temperatures between the steam dome and bottom head drain are within 145°F (81°C).

b. The recirculation pump in an idle loop must not be started, active loop flow must not be raised, and power must not be increased unless the idle loop suction temperature is with in 50°F (28°C) of the active loop suction temperature. If two pumps are idle, the loop suction temperature must be within 50°F (28°C) of the steam dome temperature before pump startup.

Level 2

During two-pump operation at rated core flow, the bottom head temperature as measured by the bottom drain line thermocouple should be within 30°F (17°C) of the recirculation loop temperatures.

14.2.12.3.16.2 Test Number 16B - Water Level Reference Leg Temperature Measurement.

14.2.12.3.16.2.1 Purpose. The purpose of this test is to measure the reference leg temperature and recalibrate the affected level instruments if the measured temperature is different than the value assumed during the initial calibration.

14.2.12.3.16.2.2 Prerequisites. The preoperational tests have been completed, reviewed by POC, and the Plant Manager has approved the test procedures and initiation of testing. All applicable system instrumentation is installed and calibrated.

14.2.12.3.16.2.3 Description. To monitor the reactor vessel water level, five level instrument systems are provided. These are

a. Shutdown range level system,
b. Narrow range level system,
c. Wide range level system,
d. Fuel zone level system, and
e. Upset range.

These systems are used respectively as follows:

a. Water level measurement in cold shutdown conditions (shutdown range level system),

b. Feedwater flow and water level control functions in hot operating conditions (narrow range level system),

c. Safety functions in hot operating conditions (wide range level system),

d. Safety functions in cold shutdown conditions (fuel zone level system), and

e. High water level protection, hot operating condition (upset range).

The test will be done at rated temperature and pressure and under steady-state conditions and will verify that the reference leg temperature of the level instrument is the value assumed during initial calibration. If not, the instruments will be recalibrated using the measured value.

14.2.12.3.16.2.4 Criteria.

Level 1

Not applicable.

Level 2

The indicator readings on the narrow range level system should agree with ± 1.5 in. of the average readings or the reading calculated from the correct reference leg temperatures.

The wide and upset range level system indicators should agree within ± 6 in. of the average readings or the readings calculated from the correct reference leg temperatures.

14.2.12.3.17 Test Number 17 - System Expansion

14.2.12.3.17.1 Purpose. The purpose of this test is to (a) verify that piping systems and components are unrestrained with respect to thermal expansion, (b) verify that suspension components are functioning in the specified manner, (c) provide confirmatory data for the calculated stress levels in nozzles and weldments, (d) perform an inspection to satisfy ASME Section XI, IWF-220 post heatup (shakedown) inspection requirements, and (e) satisfy the inspection requirements for the condensate and feedwater systems according to Regulatory Guide 1.68.1.

14.2.12.3.17.2 Prerequisites. Necessary preoperational tests have been completed. The preheatup examination program relating to component supports as contained in the CGS Preservice Inspection Program Plan has been completed. The POC has reviewed and the Plant Manager has approved the test procedure and initiation of testing. Instrumentation has been installed and calibrated.

14.2.12.3.17.3 Description. A significant mechanical design objective for nuclear piping support systems is to provide for unrestricted thermal expansion of piping and components, from ambient to rated temperature. The combination of visual and remote monitoring of selected piping systems will provide the data necessary to evaluate the support system. The criteria used for system selection is Standard Review Plan Section 3.9.2 and those systems with a normal operating temperature greater than 250°F. The drywell piping systems selected for visual inspection and remote monitoring are the following:

a. Reactor recirculation,
b. Main steam,
c. Feedwater,
d. Residual heat removal (shutdown cooling supply and return line),
e. Reactor core isolation cooling (steam supply and head spray line),

f. Safety/relief valve discharge piping, and
g. Reactor water cleanup.

In addition, visual inspections only of the following drywell systems will be conducted:

a. High-pressure core spray,
b. Low-pressure core spray,
c. Sacrificial shield wall penetrations,
d. Residual heat removal (LPCI) injection lines,
e. Main steam flow instrumentation piping,
f. Main steam drain piping,
g. Reactor head vent piping,
h. Reactor coolant sample piping, and
i. Standby liquid control injection piping.

Piping support system components (hangers, sway struts, boxes, snubbers, and whip restraints) for the systems listed will be visually inspected at ambient (less than or equal to 200°F), during the initial heatup cycle at an intermediate temperature (200°F to 300°F, equivalent to 30 psig reactor pressure) and at normal operating temperature (545°F, equivalent to 1000 psig reactor pressure). Data from the remote monitoring instrumentation will be recorded and evaluated at similar intervals. Exceptions to this are feedwater, main steam relief valve (MSRV) discharge piping, and the reactor head spray and vent piping above the drywell bulkhead. The feedwater piping will attain rated temperatures only at higher reactor power levels, which precludes drywell entry. The MSRV piping is only heated up during valve actuation, which also represents a potential inspection personnel hazard. The area above the bulkhead is considered hazardous due to confinement and high temperatures. The methods used to evaluate these are as follows:

a. Feedwater drywell piping is instrumented and will be evaluated at 25% and 100% reactor power using the data collected by the lanyard potentiometers.

b. Two MSRV lines will be instrumented allowing data evaluation to be applied to all lines during SRV actuation.

c. The piping above the bulkhead will be visually inspected prior to drywell head installation.

Feedwater and the SRV piping systems will also be inspected during the shakedown inspection.

The instrumented nodes will be provided with three sensors to indicate movement in three orthogonal plans. The actual node locations will be selected through a coordinated effort between the CGS Plant Technical and Technology organizations. In this way the analytically best suited node will be coupled with accessible locations. General Electric will provide

locations and acceptance criteria for the recirculation and main steam systems. The Energy Northwest Mechanic's Department will provide similar information for the remainder of the systems tested. The instruments will provide thermal movement and vibration data that will be compared with predicted values. If these measured displacements confirm the calculated values, coupled with acceptable visual inspections, the piping system will be considered to have responded as designed. The type of lanyard potentiometer monitors used enable the collection of thermal movement and vibration data. With the acceptance criteria for all testing based on the system design, conformance to the acceptance criteria indicates adherence to the analytical limits.

On completion of the startup test, the piping response data and the completed test procedure will be reviewed by the Energy Northwest Engineering Department responsible for the Stress Report Review and GE. The review will determine if the test results indicate the piping responded in a manner consistent with the Stress Report predictions and the ASME Code limits. An Energy Northwest Level 3 inspector and the American Nuclear Insurers (ANI) will sign all data sheets performing ASME Section XI inspections.

The drywell piping testing/inspections will be conducted during the PATP as follows:

a. The visual inspections and thermal expansion data will be taken during the initial reactor heatup at thermal equilibrium conditions,

b. During the course of the PATP, data will be collected during steady state and transient conditions for vibration level evaluation, and

c. Near the end of the PATP a final drywell entry and inspection is scheduled.

Visual inspections will be conducted on selected piping systems outside the drywell during thermal equilibrium, steady-state operation, and selected transient conditions. The systems selected are:

a. Main steam,
b. Condensate and feedwater,
c. RCIC steam supply and exhaust,
d. RCIC injection piping,
e. RHR shutdown cooling supply and return,
f. Reactor water cleanup, and
g. Main steam leakage control system.

14.2.12.3.17.4 Criteria.

Level 1

Thermally induced displacement of system components shall be unrestrained with no evidence of binding or impairment.

Spring hangers shall not be bottomed out or have the spring fully stretched.

Snubbers shall not reach the limits of their travel. The displacements at the established transducer locations used to measure pipe deflections shall not exceed the allowable values. The allowable values of displacement shall be based on not exceeding ASME Section III Code Stress allowables.

Level 2

Spring hangers will be in their operating range (between the hot and cold settings).

Snubber settings must be within their expected operating range.

The displacements at the established transducer locations shall not exceed the expected values.

14.2.12.3.18 Test Number 18 - Core Power Distribution

14.2.12.3.18.1 Purpose. The purpose of this test is to determine the reproducibility of the TIP system readings.

14.2.12.3.18.2 Prerequisites. The preoperational tests have been completed, reviewed by POC, and the Plant Manager has approved the test procedures and initiation of testing. The TIP detector and dummy detector, ball valve time delay, core top and bottom limits, clutch, x-y recorder, and purge system will have been shown to be operational. Instrumentation has been calibrated and installed.

14.2.12.3.18.3 Description. The TIP reproducibility consists of a random noise component and a geometric component. The geometric component is due to variation in the water gap geometry and TIP tube orientation from TIP location to location. Measurement of these components is obtained by taking repetitive TIP readings at a single TIP location, and by analyzing pairs of TIP readings taken at TIP locations which are symmetrical about the core diagonal of fuel loading symmetry.

One set of TIP data will be taken at the 50% power level and at least one other set at 75% power or above.

The TIP data will be taken with the reactor operating with an octant symmetric rod pattern and at steady-state conditions.

The total TIP reproducibility is obtained by dividing the standard deviation of the symmetric TIP pair nodal ratios by two. The nodal TIP ratio is defined as the nodal base value of the TIP in the lower right half of the core divided by its symmetric counterpart in the upper left half. The total TIP reproducibility value that is compared with the test criterion is the average value of the data sets taken.

The random noise uncertainty is obtained from successive TIP runs made at the common hole, with each of the TIP machines making six runs. The standard deviation of the random noise is derived by taking the square root of the average of the variances at nodal levels 5 through 22, where the nodal variance is obtained from the fractional deviations of the successive TIP values about their nodal mean value.

The geometric component of TIP reproducibility is obtained by statistically subtracting the random noise component from the total TIP reproducibility.

14.2.12.3.18.4 Criteria.

Level 1

Not applicable.

Level 2

The total TIP uncertainty (including random noise and geometrical uncertainties) obtained by averaging the uncertainties for all data sets shall be less than 6.0%.

The data acquired for random noise uncertainty does not have specific acceptance criteria value and is used only to aid in the analysis of the TIP uncertainty.

14.2.12.3.19 Test Number 19 - Core Performance

14.2.12.3.19.1 Purpose. The purposes of this test are to (a) evaluate the core thermal power, and (b) evaluate the following core performance parameters are within limits: (a) maximum linear heat generation rate (MLHGR), (b) minimum critical power ratio (MCPR), and (c) maximum average planar linear heat generation rate (MAPLHGR).

14.2.12.3.19.2 Prerequisites. The preoperational tests have been completed, reviewed by POC, and the Plant Manager has approved the test procedures and initiation of testing. System instrumentation has been installed and calibrated, and test instrumentation has been calibrated.

14.2.12.3.19.3 Description. The core performance evaluation is employed to determine the principal thermal and hydraulic parameters associated with core behavior. These parameters are

a. Core flow rate,
b. Core thermal power level,
c. MLHGR,
d. MAPLHGR, and
e. MCPR.

The core performance parameters will be evaluated by manual calculation techniques described in Startup Test Instruction 19 or may be obtained from the process computer.

If the process computer is used as a primary means to obtain these parameters, it must be proven that it agrees with BUCLE within 2% on all thermal parameters (see Test Number 13). If both BUCLE and the process computer are not available, the manual calculation techniques described in Startup Test Instruction 19 can be used for the core performance evaluation.

14.2.12.3.19.4 Criteria.

Level 1

The MLHGR of any rod during steady-state conditions shall not exceed the limit specified by the Technical Specifications.

The steady-state MCPR shall not exceed the minimum limits specified by the Technical Specifications.

The MAPLHGR shall not exceed the limits specified by the Technical Specifications.

Steady-state reactor power shall be limited to the rated MWt and values on or below the design flow control line. Core flow shall not exceed its rated value.

Level 2

Not applicable.

14.2.12.3.20 Test Number 20 - Steam Production

14.2.12.3.20.1 Purpose. The purpose of performing this test is to demonstrate that the NSSS is providing steam sufficient to satisfy all appropriate warranties as defined in the contract.

14.2.12.3.20.2 Prerequisites. The preoperational tests have been completed, reviewed by POC, and the Plant Manager has approved the test procedures and initiation of testing.

14.2.12.3.20.3 Description. Warranty demonstration consists of recording sufficient data under steady-state conditions to determine the reactor power level, the pressure and quality of the steam, and the steam flow rate from the reactor.

These measurements will include the temperature, pressure, and flow rate of feedwater entering the reactor; the energy added to the reactor water by the recirculation drive pumps; the flow rate through and temperature entering and leaving the reactor cleanup system; the flow rate and temperature of the CRD cooling water; the carryover of reactor water into the steam lines, and the steam pressure outside the drywell near the MSIV.

Each set of measurements shall be taken at frequent intervals, every 5 or 10 minutes as appropriate, for a total test run duration of 4 hr. The average measure quantity, suitably corrected for all calibration factors, is used to determine NSSS output during the test run. Where the contract requires a 100-hr demonstration, two test runs shall be made, one in the first 50 hr and one in the second 50 hr. The demonstrated output is the average of the values from the two test runs. During the balance of the 100-hr demonstration, the NSSS output shall be held constant within ± 5% of the nominal steam flow rate as indicated by the installed plant feedwater instrumentation.

14.2.12.3.20.4 Criteria.

Level 1

a. The NSSS parameters as determined by using normal operating procedures shall be within the appropriate license restrictions.

b. The NSSS will be capable of supplying steam in an amount and quality corresponding to the final feedwater temperature and other conditions shown on the rated steam output curve in the NSSS technical description. The rated steam output curve provides the warrantable reactor vessel steam output as a function of feedwater temperature, as well as warrantable steam conditions at the outboard MSIVs.

c. Thermodynamic parameters are consistent with the 1967 ASME steam tables. Correction techniques for conditions that differ from the contracted conditions will be mutually agreed to prior to the performance of the test.

Level 2

Not applicable.

14.2.12.3.21 Test Number 21 - Core Power-Void Mode

14.2.12.3.21.1 Purpose. The purpose of this test is to measure the stability of the core power-void dynamic response and to demonstrate that its behavior is within specified limits.

14.2.12.3.21.2 Prerequisites. The preoperational tests have been completed, reviewed by POC, and the Plant Manager has approved the test procedures and initiation of testing. System instrumentation has been installed and calibrated, and test instrumentation calibrated.

14.2.12.3.21.3 Description. The core power void loop mode that results from a combination of the neutron kinetics and core thermal hydraulic dynamics is least stable near the natural circulation end of the rated 100% power rod line. A fast change in the reactivity balance is obtained by a pressure regulator step change (see test 22) and by moving a very high worth rod only 1 or 2 notches. Both local flux and total core response will be evaluated by monitoring selected LPRMs during the transient.

14.2.12.3.21.4 Criteria.

Level 1

The transient response of any system-related variable to any test input must not diverge.

Level 2

The decay ratio for each system-related variable containing oscillatory modes must be less than or equal to 0.5.

14.2.12.3.22 Test Number 22 - Pressure Regulator

14.2.12.3.22.1 Purpose. The purposes of this test are to: (a) determine the optimum settings for the pressure control loop by analysis of the transients induced in the reactor pressure control system by means of the pressure regulators, (b) demonstrate the backup capability of the pressure regulators via simulated failure of the controlling pressure regulator and to set the regulating pressure difference between the two regulators at an appropriate value, (c) demonstrate smooth pressure control transition between the control valves and bypass valves when reactor steam generation exceeds steam used by the turbine, and (d) demonstrate that affected parameters are within acceptable limits during pressure-regulator-induced transient maneuvers.

14.2.12.3.22.2 Prerequisites. The preoperational tests have been completed, reviewed by POC, and the Plant Manager has approved the test procedures and initiation of testing. Instrumentation has been checked or calibrated as appropriate.

14.2.12.3.22.3 Description. The pressure setpoint will be decreased rapidly and then increased rapidly by about 10 psi (0.7 kg/cm^2) and the response of the system will be measured in each case. It is desirable to accomplish the setpoint change in less than 1 sec. At specified test conditions the load limit setpoint will be set so that the transient is handled by control valves, bypass valves, and both. The regulators will be tested by simulating a failure of a selected pressure regulator so that the other regulator will take over control. The response of the system will be measured and evaluated and regulator settings will be optimized.

14.2.12.3.22.4 Criteria.

Level 1

The transient response of any pressure control system related variable to any test input must not diverge.

Level 2

a. Pressure control system variables may contain oscillatory modes of response. In these cases, the decay ratio for each controlled mode of response must be less than or equal to 0.25,

b. The pressure response time from initiation of pressure setpoint change to the turbine inlet pressure peak shall be ≤10 sec,

c. Pressure control system deadband, delay, etc., shall be small enough that steady-state limit cycles (if any) shall produce steam flow variations no larger than ± 0.5% of rated steam flow,

d. For all pressure regulator transients the peak neutron flux and/or peak vessel pressure shall remain below the scram settings by 7.5% and 10 psi respectively (maintain a plot of power versus the peak variable values along the 100% rod line), and

e. The variation in incremental regulation (ratio of the maximum to the minimum valve of the quantity, "incremental change in pressure control signal/incremental change in steam flow," for each flow range) shall meet the following:

Steam Flow Obtained With Valves Wide Open (%)	*Variation*
0 to 90	*≤4:1*
90 to 97	*≤2:1*
90 to 99	*≤5:1*

Level 3

a. *Additional dynamics of the control system, outside of the regulator compensation filters, shall be equivalent to a time constant no greater than 0.10 sec. This also includes any dead time which may exist,*

b. *Control or bypass valve motion must respond to pressure inputs with deadband (insensitivity) no greater than ± 0.1 psi, and*

c. *Dynamics of both pressure regulators will be essentially identical.*

14.2.12.3.23 Test Number 23 - Feedwater System

14.2.12.3.23.1 23A - Water Level Setpoint and Manual Flow Changes.

14.2.12.3.23.1.1 Purpose. The purpose of this test is to verify that the feedwater system has been adjusted to provide acceptable reactor water level control.

14.2.12.3.23.1.2 Prerequisites. The preoperational tests have been completed, reviewed by POC, and the Plant Manager has approved the test procedures and initiation of testing. Instrumentation has been checked or calibrated as appropriate.

14.2.12.3.23.1.3 Description. Reactor water level setpoint changes of approximately 3 in. to 6 in. (8 cm to 15 cm) will be used to evaluate (and adjust if necessary) the feedwater control system settings for all power and feedwater pump modes. The level setpoint changes will also demonstrate core stability to subcooling changes.

14.2.12.3.23.1.4 Criteria.

Level 1

The transient response of any level control system-related variable to any test must not diverge.

Level 2

a. Level control system-related variables may contain oscillatory modes of response. In these cases, the decay ratio for each controlled mode of response must be less than or equal to 0.25;

b. The open loop dynamic flow response of each feedwater actuator (turbine or valve) to small (<10%) step disturbances shall be

1.	*Maximum time to 10% of a step disturbance*	*≤1.1 sec*
2.	*Maximum time from 10% to 90% of a step disturbance*	*≤1.9 sec*
3.	*Peak overshoot (% of step disturbance)*	*≤15%*
4.	*Settling time, 100%, ±5%*	*≤14 sec*

c. The average rate of response of the feedwater actuator to large (>20% of pump flow) step disturbances shall be between 10% and 25% rated feedwater flow/sec. This average response rate will be assessed by determining the time required to pass linearly through the 10% and 90% response points; and

d. At steady-state generation for the 3/1 element system, the input scaling to be mismatch gain should be adjusted such that level error due to biased mismatch gain output should be within ±1 in.

Level 3

a. The dynamic response of each individual level or flow sensor shall be as fast as possible. Band width must be at least 4.0 radians/sec (faster than 0.25 sec equivalent time constant), except for the steam flow sensors which must have band width of at least 1.0 radian/sec (faster than 1.0 sec equivalent time constant);

b. Vessel level, feedwater flow, and steam flow sensors must be installed with sufficiently short lines and proper damping adjustment so that no resonances exist;

c. Initial settings of the function generators should give a straight line. The function generators must be adjusted so that the change in slope (actual fluid flow change divided by demand change for small disturbances) shall not exceed a factor of 2 to 1 (maximum slope versus minimum slope) over the entire 20% to

100% feed flow range. Also the function generators should be used to minimize the differences between feedwater actuators (pumps and/or valves); and

d. All auxiliary controls which have direct impact on reactor level and feedwater control (e.g., feed pump minimum recirculation flow valve control) should be functional, responsive, and stable. The minimum low valve control should be fast enough to avoid pump trips and yet slower than the feedwater startup valve to avoid possible reactor flux scram due to a cold water slug.

14.2.12.3.23.2 23B - Loss of Feedwater Heating

14.2.12.3.23.2.1 Purpose. The purpose of this test is to demonstrate adequate response to a feedwater temperature loss.

14.2.12.3.23.2.2 Prerequisites. The preoperational tests have been completed, reviewed by POC, and the Plant Manager has approved the test procedures and initiation of testing. Instrumentation has been checked or calibrated as appropriate.

14.2.12.3.23.2.3 Description. The condensate/feedwater system will be studied to determine the single failure that will cause the largest loss in feedwater heating. This event will then be performed at between 80% and 90% power with the recirculation flow near its rated value.

14.2.12.3.23.2.4 Criteria.

Level 1

a. For the feedwater heater loss test, the maximum feedwater temperature decrease due to a single failure case must be ≤100°F. The resultant MCPR must be greater than the fuel thermal safety limit; and

b. The increase in simulated heat flux cannot exceed the predicted Level 2 value by more than 2%. The predicted value will be based on the actual test values of feedwater temperature change and power level.

Level 2

The increase in simulated heat flux cannot exceed the predicted value in the Transient Safety Analysis Design Report referenced to the actual feedwater temperature change and power level.

14.2.12.3.23.3 22C - Feedwater Pump Trip.

14.2.12.3.23.3.1 Purpose. The purpose of this test is to demonstrate the capability of the automatic core flow runback feature to prevent low water level scram following the trip of one feedwater pump.

14.2.12.3.23.3.2 Prerequisites. The preoperational tests have been completed, reviewed by POC, and the Plant Manager has approved the test procedures and initiation of testing. Instrumentation has been checked or calibrated as appropriate.

14.2.12.3.23.3.3 Description. One of the two operating feedwater pumps will be tripped and the automatic recirculation runback circuit will act to drop the power to within the capacity of the remaining feedwater pump. Prior to the test a simulation of the feedwater pump trip will be done to verify the runback capability of the recirculation system. This test should be performed after test 23D (limiting pump speeds).

14.2.12.3.23.3.4 Criteria.

Level 1

Not applicable.

Level 2

The reactor shall avoid low water level scram by a 3-in. margin from an initial water level halfway between the high- and low-level alarm setpoints.

14.2.12.3.23.4 23D - Maximum Feedwater Runout Capability.

14.2.12.3.23.4.1 Purpose. This test calibrates the feedwater flow and determines if the maximum feedwater runout capability is compatible with the licensing.

14.2.12.3.23.4.2 Prerequisites. The preoperational tests have been completed, reviewed by POC, and the Plant Manager has approved the test procedures and initiation of testing. Instrumentation has been checked or calibrated as appropriate.

14.2.12.3.23.4.3 Description. The test is divided into two parts: first, the initial calibration of the speed controller and second, verification of calibration by measured data which includes a verification that the maximum feedwater flows do not exceed the flows (different flows at different vessel pressures) in the FSAR.

a. The speed controller calibration is done by first obtaining vendor pump performance curves. The pump performance curves are then used to determine

the turbine speed corresponding to the maximum allowable flow rated vessel pressure specified by the FSAR and the minimum speed that corresponds to 0% flow at 865 psia. Additionally, for good level control system performance it should reach 115% nuclear boiler rated (NBR) flow at 1080 psia and 90% NBR flow at 1024 psi in the one pump tripped condition. Adjustable equipment (i.e., feed pump turbine speed loops, mechanical limiters, and feedwater control system function generator, etc.) are set to prevent the feedwater pumps from exceeding their maximum allowed output and yet allow the desirable performance; and

b. During the data collection and verification of calibration portion of the test, pressure, flow, and controller data will be collected between 60%-100% power. Measured data will be compared against expected values to ensure proper calibration. The measured maximum flow will be adjusted to the FSAR pressures using the measured data. The maximum flows stated in the FSAR are used as licensing assumptions; therefore, the FSAR maximum flows should not be exceeded. If, however, the FSAR maximum flows are exceeded two options exist. The system can be adjusted so that the licensing assumption is not exceeded or an additional penalty can be applied to the CPR. The CPR can be revised by applying a 0.01 adder for each 5% of rated feedwater flow difference (between the determined actual maximum flow and the FSAR maximum flow).

14.2.12.3.23.4.4 Criteria.

Level 1

Maximum speed attained shall not exceed the speeds which will give the following flows with the normal complement of pumps operating.

a. F% NBR at P psia, and
b. [F% + A(P-P rated)] % NBR at P rated, psig
where: F = 135%, P = 1075 psia, A = 0.2%/psig.

Level 2

The maximum speed must be greater than the calculated speeds required to supply:

a. With rated complement of pumps -115% NBR at 1075 psi, and
b. One feedwater pump tripped condition -68% NBR at 1025 psia.

NOTE: Level 1 test criteria are originated from NSSS transient Performance Engineering Unit. Level 2 test criteria are originated from the Control System Design Unit.

14.2.12.3.24 Test Number 24 - Turbine Valve Surveillance

14.2.12.3.24.1 Purpose. The purpose of this test is to demonstrate the acceptable procedures and maximum power levels for recommended periodic surveillance testing of the main turbine, control, and stop and bypass valves without producing a reactor scram.

14.2.12.3.24.2 Prerequisites. The preoperational tests have been completed, reviewed by POC, and the Plant Manager has approved the test procedures and initiation of testing. Instrumentation has been checked or calibrated as appropriate.

14.2.12.3.24.3 Description. Individual main turbine control and stop and bypass valves are tested routinely during plant operation as required for turbine surveillance testing. At several test points the response of the reactor will be observed. It is recommended that the maximum possible power level for performance of these tests along the 100% load line be established. First, actuation should be between 45% and 65% power and used to extrapolate to the next test point between 75% and 90% power and ultimately to the maximum power test condition with ample margin to scram. Note the proximity to APRM flow bias scram point and preconditioning cladding interim operating management recommendation (PCIOMR) envelope. Each valve test will be manually initiated and reset. The rate of valve stroking and timing of the close-open sequence will be such that the minimum practical disturbance is introduced and that PCIOMR limits are not exceeded.

14.2.12.3.24.4 Criteria.

Level 1

Not applicable.

Level 2

a. *Peak neutron flux must be at least 7.5% below the scram trip setting. Peak vessel pressure must remain at least 10 psi below the high pressure scram setting. Peak heat flux must remain at least 5.0% below its scram trip point; and*

b. *Peak steam flow in each line must remain 10% below the high flow isolation trip setting.*

14.2.12.3.25 Test Number 25 - Main Steam Isolation Valves

14.2.12.3.25.1 25A - Main Steam Isolation Valve Function Tests.

14.2.12.3.25.1.1 Purpose. The purposes of this test are to (a) functionally check the MSIVs for proper operation at selected power levels, (b) determine isolation valve closure times, and (c) determine a maximum power at which full closures of a single valve can be performed without a scram.

14.2.12.3.25.1.2 Prerequisites. The preoperational tests have been completed, reviewed by POC, and the Plant Manager has approved the test procedures and initiation of testing. Instrumentation has been checked or calibrated as appropriate.

14.2.12.3.25.1.3 Description. At 5% and greater reactor power levels, individual fast closure of each MSIV will be performed to verify their functional performance and to determine closure times. The times to be determined are (a) the time from deenergizing the solenoids until the valve is 100% closed (t_{sol}), and (b) the valve stroke time (t_s) Time t_{sol} equals the interval from deenergizing the solenoids until the valve reaches 90% closed plus 1/8 times the interval from 10% to 90% closure. Time t_s equals the interval from when the valve starts to move until it is 100% closed and is based on the interval from 10% to 90% closure and linear valve travel from 0% to 100% closure.

To determine the maximum power level at which full individual closures can be performed without a scram, first actuation will be performed between 40% to 55% power and used to extrapolate to the next test point between 60% and 85% power and ultimately to the maximum power test condition with ample margin to scram.

14.2.12.3.25.1.4 Criteria.

Level 1

The MSIV stroke time (t_s) shall be not faster than 3.0 sec (average of the fastest valve in each steam line) and for any individual valve 2.5 sec $\leq t_s \leq 5$ sec. Total effective closure time for any individual MSIV shall be t_{sol} plus the maximum instrumentation delay time as determined in preoperational test GE-4 and shall be ≤ 5.5 sec.

Level 2

a. The reactor shall not scram or isolate, and

b. During full closure of individual valves, peak valve pressure must be 10 psi (0.7 kg/cm^2) below scram, peak neutron flux must be 7.5% below scram, and

steam flow in individual lines must be 10% below the isolation trip setting. The peak heat flux must be 5% less than its trip point.

14.2.12.3.25.2 25B - Full Reactor Isolation.

14.2.12.3.25.2.1 Purpose. The purpose of this test is to determine the reactor transient behavior that results from the simultaneous full closure of all MSIVs.

14.2.12.3.25.2.2 Prerequisites. The preoperational tests have been completed, reviewed by POC, and the Plant Manager has approved the test procedures and initiation of testing. Instrumentation has been checked or calibrated as appropriate.

14.2.12.3.25.2.3 Description. A test of the simultaneous full closure of all MSIVs will be performed at > 75% of rated thermal power. Correct performance of the RCIC and relief valves will be shown. Reactor process variables will be monitored to determine the transient behavior of the system during and following the main steam line isolation.

14.2.12.3.25.2.4 Criteria.

Level 1

a. Reactor must scram to limit the severity of the neutron flux and simulated fuel surface heat flux transient,

b. Feedwater system settings must prevent flooding of the steam lines,

c. The recorded MSIV full closure times must meet the previously stated timing specifications (test 25A), and

d. The positive change in vessel dome pressure occurring within 30 sec after closure of all MSIV valves must not exceed the Level 2 criteria by more than 25 psi. The positive change in simulated heat flux shall not exceed the Level 2 criteria by more than 2% of rated value.

Level 2

a. The temperature measured by the thermocouples on the discharge side of the SRVs must return to within 10°F of the temperature recorded before the valve was opened. If pressure sensors are available, they shall return to their initial state upon valve closure;

b. For the full MSIV closure from full power predicted analytical results based on beginning-of-cycle design basis analysis, assuming no equipment failures and

applying appropriate parametric corrections, will be used as the basis to which the actual transient is compared.

c. Initial action of RCIC and HPCS shall be automatic if low water level (L2) is reached, and system performance shall be within specification, and

d. Recirculation pump trip shall be initiated if low water level (L2) is reached. Recirculation pump power will shift to the LFMGs if low water level (L3) is reached.

14.2.12.3.26 Test Number 26 - Relief Valves

14.2.12.3.26.1 Purpose. The purposes of this test are to (a) verify the proper operation of the main system relief valves, (b) verify that the discharge piping is not blocked, (c) verify their proper seating following operation, (d) obtain signature information of relief valve response for subsequent comparisons, and (e) determine their capacities.

14.2.12.3.26.2 Prerequisites. The preoperational tests have been completed, reviewed by POC, and the Plant Manager has approved the test procedures and initiation of testing. Instrumentation has been checked or calibrated as appropriate.

14.2.12.3.26.3 Description. The main steam relief valves will each be opened using the "manual" control mode so that at any time only one is open. During heatup at 250 psig (17.5 kg/cm^2), each valve will be opened and closed to demonstrate proper functioning. Flow verification of each relief valve will be determined at rate pressure by observing bypass or control valve motion and by observing a change in discharge thermocouple readings. Proper reseating of each relief valve will be verified by observation of temperatures in the relief valve discharge piping. At selected test conditions each valve will be manually actuated and appropriate system parameters recorded during the transient. Data analysis will include a comparison of the system response during each of the valve actuations. Capacity of each relief valve will be determined at rated pressure by the amount of bypass or control valve closure required to maintain reactor pressure.

14.2.12.3.26.4 Criteria.

Level 1

There should be positive indication of steam discharge during the manual actuation of each valve.

The sum of capacity measurements from all relief valves shall be equal to or greater than 15.8 x 10^6 lb/hr at an inlet pressure of 103% at 1205 psig. The total flow capacity of the SRVs used in the automatic depressurization system must be equal to or greater than 4.8 x 10^6 lb/hr

at 1125 psig when the valve having the highest measured capacity is assumed to be out of service.

Level 2

Relief valve leakage shall be low enough that the temperature measured by the thermocouples in the discharge side of the valves returns to within 10°F (5.6°C) of the temperature recorded before the valve was opened. The thermocouples are expected to be operating properly.

The pressure regulator must satisfactorily control the reactor transient and close the control valves or bypass valves by an amount equivalent to the relief valve discharge. The valve transients recorder signatures for each valve must be returned to GE in San Jose for relative system response comparison.

Each relief valve shall have a capacity between 90% and 122.5% of its expected value corrected to an inlet pressure of 103% at 1205 psig.

No more than 25% of the relief valves may have an individual corrected flow rate that is between 90% and 100% of their expected flow rates.

The transient recorder signatures for each valve must be analyzed for relative system response comparison.

14.2.12.3.27 Test Number 27 - Turbine Trip and Generator Load Rejection

14.2.12.3.27.1 Purpose. The purpose of this test is to demonstrate the response of the reactor and its control systems to protective trips in the turbine and generator.

14.2.12.3.27.2 Prerequisites. The preoperational tests have been completed, reviewed by POC, and the Plant Manager has approved the test procedures and initiation of testing. All controls and interlocks are checked and instrumentation calibrated. The plant electrical system will be aligned in the normal mode for the operating condition at which the test is performed.

14.2.12.3.27.3 Description. Turbine trip (closure of the main turbine stop valves within 0.1 sec) and generator trip (closure of the main turbine control valves in about 0.1 sec to 0.2 sec) will be performed at selected power levels during the startup test program. At low power levels, reactor protection following the trip is provided by high neutron flux and vessel high pressure scram. For the protective trips occurring at intermediate and higher power levels, reactor will scram by relays, actuated by control or stop valve motion.

A generator trip will be performed at low power level such that nuclear boiler steam generation is just within the bypass valve capacity to demonstrate scram avoidance.

For the trips performed at intermediate power range, reactor scram is most important in controlling the transient peaks.

Above 40% power, the recirculation pump circuit breakers are both automatically tripped, and subsequent transient pressure rise will be limited by the opening of the bypass valves initially and the SRVs if necessary.

14.2.12.3.27.4 Criteria.

Level 1

a. *For turbine and generator trips at power levels greater than 50% NBR, there should be a delay of less than 0.1 sec following the beginning of control or stop valve closure before the beginning of bypass valve opening. The bypass valves should be opened to a point corresponding to greater than or equal to 80% of their capacity within 0.3 sec from the beginning of control or stop valve closure motion;*

b. *Feedwater system settings must prevent flooding of the steam line following these transients;*

c. *The two pump drive flow coastdown transient during the first 6 sec must be equal to or faster than that specified in test 30B (see Figure 14.2-6);*

d. *The positive change in vessel dome pressure occurring within 30 sec after either generator or turbine trip must not exceed the Level 2 criteria by more than 25 psi;*

e. *The positive change in simulated heat flux shall not exceed the Level 2 criteria by more than 2% of the rated value; and*

f. *The total time delay from start of turbine stop valve motion or control valve motion to the complete suppression of electrical arc between the fully open contacts of the recirculation pump trip (RPT) circuit breakers shall be less than 190 msec.*

Level 2

a. *There shall be no MSIV closure during the first 3 minutes of the transient, and operator action shall not be required during that period to avoid the MSIV trip. (The operator may take action after the first 3 minutes, including switching out of run mode. The operator may also switch out of run mode in the first*

3 minutes if measured data confirms that his action did not prevent MSIV closure);

b. The positive change in vessel dome pressure and in simulated heat flux which occurs within the first 30 sec after the initiation of either generator or turbine trip must not exceed the predicted values. [Predicted values will be referenced to actual test conditions of initial power life and dome pressure and will use beginning of life (BOL) nuclear data. Worst case design or Technical Specification values of all hardware performance shall be used in the prediction with the exception of control rod insertion time and the delay from beginning of turbine control valve or stop valve motion to the generation of the scram signal. The predicted pressure and heat flux will be corrected for the actual measured values of these two parameters];

c. For the generator grip within the bypass valves capacity, the reactor shall not scram for initial thermal power values within that bypass valve capacity;

d. The measured bypass capacity (in percent of rated power) shall be equal or greater than that used for the FSAR analysis (3,576,000 lb/hr);

e. Recirculation LFMG sets shall take over after the initial recirculation pump trips and adequate vessel temperature difference shall be maintained;

f. Feedwater level control shall avoid loss of feedwater due to possible high level (L8) trip during the event;

g. Low water level total recirculation pump trip, HPCS, and RCIC shall not be initiated; and

h. The temperature measured by thermocouples on the discharge side of the SRVs must return to within 10°F of the temperature recorded before the valve was opened. In addition the acoustical monitors should indicate the valve is closed after the transient is complete.

14.2.12.3.28 Test Number 28 - Shutdown From Outside the Main Control Room

14.2.12.3.28.1 Purpose. The purpose of this test is to demonstrate that the reactor can be brought down from a normal initial steady-state power level to the point where cooldown is established and under control with reactor vessel pressure and water level controlled from outside the control room.

14.2.12.3.28.2 Prerequisites. The preoperational tests have been completed, reviewed by POC, and the Plant Manager has approved the test procedures and initiation of testing. Instrumentation has been checked or calibrated as appropriate.

14.2.12.3.28.3 Description. The test will be performed at a low power level and will consist of demonstrating the capability to control reactor level and pressure from outside the control room. The reactor will be scrammed and isolated from the control room. Reactor pressure and water level will be controlled using SRVs, RCIC, and RHR from outside the control room during the subsequent cooldown. In addition, the RHR shutdown cooling mode will be placed in service from outside the control room. All other operator actions not directly related to maintaining vessel water level and pressure will be performed in the main control room. Operation from the main control room to protect or secure systems not related to the controlled cooldown of the reactor is permitted during this test. These actions are recorded and later evaluated to determine if they had bearing on the transient.

14.2.12.3.28.4 Criteria.

Level 1

Not applicable.

Level 2

During a simulated main control room evacuation, the reactor must be brought to the point where cooldown can be initiated, and the reactor vessel pressure and water level must be controlled using equipment and controls outside the main control room.

14.2.12.3.29 Test Number 29 - Recirculation Flow Control

14.2.12.3.29.1 29A - Valve Position Control.

14.2.12.3.29.1.1 Purpose. The purpose of this test is to demonstrate the recirculation flow control systems capability while in the valve position (POS) mode.

14.2.12.3.29.1.2 Prerequisites. The preoperational tests have been completed, reviewed by POC, and the Plant Manager has approved the test procedures and initiation of testing. All controls are checked and instrumentation calibrated.

14.2.12.3.29.1.3 Description. The testing of the recirculation flow control system follows a "building block" approach while the plant is ascending from low to high power levels: Components and inner control loops are tested first, followed by drive flow control and plant power maneuvers to adjust and then demonstrate the outer loop controller performance. Preliminary component and valve position loop tests will be run when the plant is in cold

shutdown to visually observe the hydraulic cylinder response. While operating at low power with the pumps using the low frequency power supply, small step changes will input into the position controller and the response recorded.

14.2.12.3.29.1.4 Criteria.

Level 1

The transient response of any recirculation system related variables to any test input must not diverge.

Level 2

a. Recirculation system related variables may contain oscillatory modes of response. In these cases, the decay ratio for each controlled mode of response must be less than or equal to 0.25,

b. Maximum rate of change of valve position shall be 10 ± 1% sec.

During TC-3 and TC-6 while operating on the high speed (60 Hz) source, gains and limiters shall be set to obtain the following response,

c. Delay time for position demand step shall be

For step inputs of 0.5% to 5% ≤0.15 sec.
For step inputs of 0.2% to 0.5%-

d. Response time for position demand step shall be

For step inputs of 0.5% to 5% ≤0.45 sec.
For step inputs of 0.2% to 0.5%-, and

e. Overshoot after a small position demand input (1% to 5%) step shall be 10% of magnitude of input.

Level 3

a. Gains shall be set to give as fast a response as possible for small position demand input within the overshoot criterion (e) and without additional valve duty cycle. (See test 29B, Section 14.2.12.3.29.2, for valve duty cycle measurement.)

b. Position loop deadband shall be 0.2% of full valve stroke.

NOTE: At a minimum, performing tests near the high and low end of the specified range is acceptable for verifying step input response.

14.2.12.3.29.2 29B - Recirculation Flow Loop Control.

14.2.12.3.29.2.1 Purpose. The purposes of this test are to (a) demonstrate the core flow system's control capability over the entire flow control range, including both core flow neutron flux and load following modes of operation, and (b) determine that all electrical compensators and controllers are set for desired system performance and stability.

14.2.12.3.29.2.2 Prerequisites. The preoperational tests have been completed, reviewed by POC, and the Plant Manager has approved the test procedures and initiation of testing. All controls are checked and instrumentation calibrated.

14.2.12.3.29.2.3 Description. Following the initial position mode tests of 29A the final adjustment of the position loop gains, flow loop gains, and preliminary valves of the flux loop adjustments will be made on the mid-power line. This will be the most extensive testing of the recirculation control system. The core power distribution will be adjusted by control rods to permit broader range of maneuverability with respect to PCIOMR. In general, the controller dials and gains will be raised to meet the maneuvering performance objectives. Thus, the system will be set to be the slowest that will perform satisfactorily to maximize stability margins and to minimize equipment wear by avoiding controller overactivity.

Because of PCIOMR power maneuvering rate restrictions, the fast flow maneuvering adjustments are performed along a mid-power rod line, and extrapolation made to the expected results along the 100% rod line. The utility has the option to decide to

a. Perform the faster power changes on the 100% rod line that are greater than what the PCIOMR allow, or

b. To accept the mid-power load line demonstrations as acceptable proof of maneuverability.

For immediate commercial operation, the flux loop will be set slower and the operator will limit manual mode maneuvers. If PCIOMRs are ever withdrawn, the tested faster auto settings can be inserted onto the controller with only a brief dynamic test, rather than a full startup test.

14.2.12.3.29.2.4 Criteria.

Level 1

The transient response of any recirculation system related variable to any test input must not diverge.

Level 2

a. The decay ratio of the flow loop response to any test inputs shall be < 0.25,

b. The flow loops provide equal flows in the two loops during steady-state operation. Flow loop gains should be set to correct a flow imbalance in less than 25 sec,

c. The delay time for flow demand step ($\leq 5\%$) shall be 0.4 sec or less,

d. The response time for flow demand step ($\leq 5\%$) shall be 1.1 sec or less,

e. The maximum allowable flow over shoot for step demand of $\leq 5\%$ of rated shall be 6% of the demand step, and

f. The flow demand step settling time shall be ≤ 6 sec.

Level 3

a. Incremental gain from function generator for valve position demand input to sensed drive flow shall not vary by more than 2 to 1 over the entire flow range, and

b. Flow loop upper limit should be checked for proper setting.

Flux Loop Criteria

Level 1

The flux loop response to test inputs shall not diverge.

Level 2

a. Flux over shoot to a flux demand step shall not exceed 2% of rated for a step demand of $\leq 20\%$ of rated,

b. The delay time for flux response to a flux demand step shall be ≤0.8 sec,

c. The response time for flux demand stop shall be 2.5 sec, and

d. The flux setting time shall be ≤15 sec for a flux demand step ≤20% of rated.

Scram Avoidance and General Criteria

Level 1

Not applicable.

Level 2

For any one of the above loops test maneuvers, the trip avoidance margins must be at least the following:

a. For APRM ≥7.5%, and
b. For simulated heat flux ≥5.0%.

Flux Estimator Test Criteria

Level 1

Not applicable.

Level 2

a. Switching between estimated and sensed flux should not exceed 5 times/5 minutes at steady state, and

b. During flux step transient there should be no switching to sensed flux or if switching does occur, it should switch back to estimated flux within 20 sec of the transient.

Flux Control Valve Duty Test Criteria

Level 1

Not applicable.

Level 2

The flow control valve duty cycle in any operating mode shall not exceed 0.2% Hz. Flow control valve duty cycle is defined as

$$\frac{\text{Integrated valve movement in percent (\% Hz)}}{\text{2x time span in seconds}}$$

14.2.12.3.30 Test Number 30 - Recirculation System

14.2.12.3.30.1 30A - One Pump Trip.

14.2.12.3.30.1.1 Purpose. The purposes of this test are to (a) obtain recirculation system performance data during the pump trip, flow coastdown, and pump restart, and (b) verify that the feedwater control system can satisfactorily control water level without a resulting turbine trip/scram.

14.2.12.3.30.1.2 Prerequisites. The preoperational tests have been completed, reviewed by POC, and the Plant Manager has approved the test procedures and initiation of testing. Instrumentation has been checked or calibrated as appropriate.

14.2.12.3.30.1.3 Description. The reactor coolant recirculation system consists of the reactor vessel and two piping loops. Each loop contains a constant speed centrifugal recirculation pump, a flow control valve and two isolation valves located in the drywell, and 10 jet pumps in parallel, situated in the reactor downcomer and discharges through a manifold system to the nozzles of the 10 jet pumps. Here the flow is augmented by suction flow from the downcomer and delivered to the reactor inlet plenum.

A potential threat to plant availability is the high water level turbine trip scram caused by the level upswell that results after an unexpected recirculation one pump trip. The change in core flow and the resultant power decrease causes void formation which the level sensing system senses as a rise in water level. The one-pump trip tests are to prove that the water level will not rise enough to threaten a high level trip of the main turbine or the feedwater pumps.

14.2.12.3.30.1.4 Criteria.

Level 1

The reactor shall not scram during the one-pump trip recovery.

Level 2

The reactor water level margin to avoid a high level trip shall be ≥3.0 in. during the one-pump trip.

NOTE: Margin to trip is defined as

Margin (high level trip <8 setpoint) - (maximum water level reached ruing test) - (high level alarm <7 setpoint - initial water level)

a The simulated heat flux margin to avoid a scram shall be ≥5.0% during the one-pump trip and also during the recovery, and

b. The APRM margin to avoid a scram shall be ≥7.5% during the one-pump trip recovery.

14.2.12.3.30.2 30B - Recirculation Trip of Two Pumps.

14.2.12.3.30.2.1 Purpose. The purpose of the test is to record and verify acceptable performance of the recirculation two pump circuit trip system.

14.2.12.3.30.2.2 Prerequisites. The preoperational tests have been completed, reviewed by POC, and the Plant Manager has approved the test procedures and initiation of testing. Instrumentation has been checked or calibrated as appropriate.

14.2.12.3.30.2.3 Description. In case of higher power turbine or generator trips, there is an automatic opening of circuit breakers in the pump power supply. The result is a fast core flow coastdown that helps reduce peak neutron and heat flow in such events. This two-pump trip test verifies that this flow coastdown is satisfactory prior to the high power turbine/generator trip tests and subsequent operation.

14.2.12.3.30.2.4 Criteria.

Level 1

The two-pump-drive flow coastdown transient during the first 6 sec must be bounded by the limiting curves. (See Figure 14.2-6.)

(The limiting curves will be determined based on measurement of the recirculation flow delta P using the elbow flow meters, transmitter time delay, and time constant.)

Level 2

Not applicable.

14.2.12.3.30.3 30C - System Performance.

14.2.12.3.30.3.1 Purpose. The purpose of this test is to record recirculation system parameters during the power test program.

14.2.12.3.30.3.2 Prerequisites. The preoperational tests have been completed, reviewed by POC, and the Plant Manager has approved the test procedures and initiation of testing. Instrumentation has been checked or calibrated as appropriate.

14.2.12.3.30.3.3 Description. Recirculation system parameters will be recorded at several power-flow conditions and in conjunction with single pump trip recoveries and internals vibration testing (if applicable).

14.2.12.3.30.3.4 Criteria.

Level 1

Not applicable.

Level 2

a. The core flow shortfall shall not exceed 5% at rated power,[*]

b. The measured core delta P shall not be 70.6 psi above prediction,[*]

c. The calculated jet pump M ration shall not be 0.2 points below prediction,[*]

d. The drive flow shortfall shall not exceed 5% at rated power,[*]

e. The measured recirculation pump efficiency shall not be 78% points below the vendor tested efficiency, and

f. The nozzle and riser plugging criteria shall not be exceeded.

---

[*] *The GE Steam Generation System Design Unit will provide predictions for the comparisons for these criteria.*

14.2.12.3.30.4 30D - Recirculation Pump Runback.

14.2.12.3.30.4.1 Purpose. The purpose of this test is to verify the adequacy of the recirculation runback to mitigate a scram on the loss of one feedwater pump.

14.2.12.3.30.4.2 Prerequisites. The preoperational tests have been completed, reviewed by POC, and the Plant Manager has approved the test procedures and initiation of testing. Instrumentation has been checked or calibrated as appropriate.

14.2.12.3.30.4.3 Description. While operating at near rated recirculation flow, a loss of a feedwater pump will be simulated. The transient and final condition will be studied to determine the adequacy of the system in preventing a scram during the scheduled loss of a single feedwater pump test (test 23C).

14.2.12.3.30.4.4 Criteria.

Level 1

Not applicable.

Level 2

The recirculation flow control valves shall runback on a trip of the runback circuit.

14.2.12.3.30.5 30E - Recirculation System Cavitation.

14.2.12.3.30.5.1 Purpose. The purpose of this test is to verify that no recirculation system cavitation will occur in the operable region of the power-flow map.

14.2.12.3.30.5.2 Prerequisites. The preoperational tests have been completed, reviewed by POC, and the Plant Manager has approved the test procedures and initiation of testing. Instrumentation has been checked or calibrated as appropriate.

14.2.12.3.30.5.3 Description. Both the jet pumps and the recirculation pumps will cavitate at conditions of high flow and low power where NPSH demands are high and little feedwater subcooling occurs. However, the recirculation flow will automatically run back on sensing a decrease in subcooling (as measured by the difference between the steam and recirculation loop temperature), to lower the reactor power. The maximum recirculation flow is limited by approximate stops which will run back the recirculation flow away from the possible cavitation region. It will be verified that these limits are sufficient to prevent operation where recirculation pump or jet pump cavitation is predicted to occur.

The recirculation system flow control valves will cavitate at conditions of high differential pressure and low power (low subcooling). The recirculation flow will automatically run back on sensing a decrease in subcooling (as measured by a low feedwater flow). This limit will be verified to ensure that operation is prevented where flow control valve cavitation may occur.

In both the above cases, flow runback is caused by a shift in the power supply to the recirculation pump motors from normal power to the LFMGs.

14.2.12.3.30.5.4 Criteria.

Level 1

Not applicable.

Level 2

Runback logic shall have settings adequate to prevent operation in areas of potential cavitation.

14.2.12.3.31 Test Number 31 - Loss of Turbine-Generator and Offsite Power

14.2.12.3.31.1 Purpose. This test determines electrical equipment and reactor system transient performance during a loss of auxiliary power.

14.2.12.3.31.2 Prerequisites. The preoperational tests have been completed, reviewed by POC, and the Plant Manager has approved the test procedures and initiation of testing. Instrumentation has been checked or calibrated as appropriate. The plant electrical system will be aligned in the normal mode for the operating condition at which the test is performed.

14.2.12.3.31.3 Description. The loss of auxiliary power test will be performed at 20% to 30% of rated power. The proper response of reactor plant equipment, automatic switching equipment, and the proper sequencing of the diesel generator load will be verified. Appropriate reactor parameters will be recorded during the resultant transient.

14.2.12.3.31.4 Criteria.

Level 1

a. Reactor protection system actions shall prevent violation of fuel thermal limits.

b. All safety systems, such as the RPS, the diesel generators, and HPCS must function properly without manual assistance. The HPCS and/or RCIC system action, if necessary, shall keep the reactor water level above the initiation level

of the LPCS, LPCI, automatic depressurization systems, and MSIV closure. Diesel generators shall start automatically and when they reach rated frequency and voltage the diesel breakers will close and restore power to the engineered safety features (ESF) buses.

Level 2

a. *Proper instrument display to the reactor operator shall be demonstrated, including power monitors, pressure, water level, control rod position, suppression pool temperature, and reactor cooling system status. Displays shall not be dependent on specially installed instrumentation, and*

b. *If SRVs open, the temperature measured by thermocouples on the discharge side of the SRVs must return to within 10°F of the temperature recorded before the valve was opened. If pressure sensors are available, they shall return to their initial state on valve closure.*

14.2.12.3.32 Not Applicable

14.2.12.3.33 Test Number 33 - Piping Vibration

14.2.12.3.33.1 Purpose. The purpose of this test is to verify that the design stress levels due to piping vibration are not exceeded and satisfy the inspection requirements for condensate and feedwater systems according to Regulatory Guide 1.68.1.

14.2.12.3.33.2 Prerequisites. The preoperational tests have been completed, reviewed by POC, and the Plant Manager has approved the test procedures and initiation of testing. Instrumentation has been installed and calibrated.

14.2.12.3.33.3 Description. This test is an extension of test 17 and has been procedurally combined with the system expansion test. During reactor operation, it is desirable to show that destructive level piping vibrations do not occur during steady-state conditions and during planned transients. Acceptable vibration levels are verified by measurement (using the same sensors used in test 17) and by visual observation during system walkdowns for selected piping systems outside containment. See Section 14.2.12.3.17.2 for systems selected and selection criteria.

14.2.12.3.33.4 Criteria.

Level 1

The measured vibration amplitude (peak-to-peak) of the systems monitored shall not exceed the maximum allowable displacements.

Level 2

The measured amplitude (peak-to-peak) of vibration shall not exceed the expected values.

Visual Inspection Acceptance Criteria

The vibration levels experienced will be evaluated as acceptable if they are too small to be detected by the naked eye with consideration given to the following:

a. Proximity to sensitive equipment (pumps, valves, motor control centers, control panels, etc.),

b. Branch connection behavior, and

c. Performance of nearby component supports.

If an acceptable assessment of the observed deflections cannot be performed and corrective measures are not available, the inspector will then obtain the magnitude and frequency of the vibration using a portable vibration instrument. The information will then be evaluated by the piping design engineer to verify acceptance. Unacceptable vibration levels will be treated as a Level 1 violation.

14.2.12.3.34 Test Number 34 - Reactor Pressure Vessel Internals Vibration

14.2.12.3.34.1 Purpose. The purpose of this test is to provide information needed to confirm the similarity between the reactor internals design and the prototype with respect to flow-induced vibration. Testing is in response to Regulatory Guide 1.20 for a vibration measurement program for nonprototype, Category IV reactor internals, and the GE vibration test specification 22A6601, Revision 0.

14.2.12.3.34.2 Prerequisites. The preoperational tests have been completed, reviewed by POC, and the Plant Manager has approved the test procedures and initiation of testing. Instrumentation has been checked or calibrated as appropriate.

14.2.12.3.34.3 Description. During operation, the reactor structure may be forced into many modes of vibrations. Analytical work indicates that unacceptable level vibrations will not occur.

Detailed descriptions of sensor locations are given in GE Test Specification 22A6601, Revision 0.

Sensors used for the measurements are resistance wire strain gauges and accelerometers with double integrating output signal conditioning. Sensors will be installed in a manner to sense the most probable mode of vibration as indicated by analysis.

The test program consists of at power tests performed with the system at normal operating pressure and temperature.

During the vibration test the vibration engineer will monitor and record vibrating amplitudes and frequencies obtained from the sensors mounted on the various components. The measured amplitudes and frequencies are then compared to the acceptance criteria to ensure that all measured vibration amplitudes are within acceptable levels.

14.2.12.3.34.4 Criteria.

Level 1

The peak stress intensity may exceed 10,000 psi (single amplitude) when the component deformed in a manner corresponding to one of its normal or natural modes, but the fatigue usage factor must not exceed 1.0.

Level 2

The peak stress intensity shall not exceed 10,000 psi (single amplitude) when the component is deformed in a manner corresponding to one of its normal or natural modes. This is the low stress limit which is suitable for sustained vibration in the reactor environment for the design life of the reactor components.

14.2.12.3.35 Test Number 35 - Recirculation System Flow Calibration

14.2.12.3.35.1 Purpose. The purpose of this test is to perform complete calibration of the installed recirculation system flow instrumentation.

14.2.12.3.35.2 Prerequisites. The preoperational tests have been completed, reviewed by POC, and the Plant Manager has approved the test procedures and initiation of testing. Instrumentation has been checked or calibrated as appropriate.

14.2.12.3.35.3 Description. During the testing program at operating conditions, which allow the recirculation system to be operated at rated flow at rated power, the jet pump flow instrumentation will be adjusted to provide correct flow indication based on the jet pump flow. After the relationship between drive flow and core flow is established, the flow biased APRM/RBM system will be adjusted to match this relationship.

14.2.12.3.35.4 Criteria.

Level 1

Not applicable.

Level 2

Jet pump flow instrumentation shall be adjusted such that the jet pump total flow recorder will provide a correct core flow indication at rated conditions.

The APRM/RBM flow-bias instrumentation shall be adjusted to function properly at rated conditions.

The flow control system shall be adjusted to limit maximum core flow to 102.5% of rated by limiting the flow control valve opening position.

14.2.12.3.36 Test Number 70 - Reactor Water Cleanup System

14.2.12.3.36.1 Purpose. The purpose of this test is to demonstrate specific aspects of the mechanical operability of the RWCU system. (This test, performed at rated reactor pressure and temperature, is actually the completion of the preoperational testing that could not be done without nuclear heating.)

14.2.12.3.36.2 Prerequisites. The preoperational tests have been completed, reviewed by POC, and the Plant Manager has approved the test procedures and initiation of testing. Instrumentation has been checked or calibrated as appropriate.

14.2.12.3.36.3 Description. With the reactor at rated temperature and pressure, process variables will be recorded during steady-state operation in three modes as defined by the system process diagram: hot shutdown with loss of RPV recirculation pumps, normal, and blowdown. A comparison of the bottom head flow indicator and the RWCU inlet flow indicator will be made. The RWCU system sample station shall be tested at hot process conditions.

14.2.12.3.36.4 Criteria.

Level 1

Not applicable.

Level 2

The temperature at the tube side outlet of the nonregenerative heat exchangers shall not exceed 130°F (54°C) in the blowdown mode and shall not exceed 120°F in the normal mode.

The pump available NPSH will be 13 ft or greater during the hot shutdown with loss of RPV recirculation pumps mode defined in the process diagrams.

The cooling water supplied to the nonregenerative heat exchangers shall be less than 6% above the flow corresponding to the heat exchanger capacity (as determined from the process diagram) and the existing temperature differential across the heat exchangers. The outlet temperature shall not exceed 180°F.

Recalibrate bottom head flow indicator (R610) against RWCU flow indicator (R609) if the deviation is greater than 25 gpm.

Pump vibration shall be less than or equal to 2 mils peak-to-peak (in any direction) as measured on the bearing housing and 2 mils peak-to-peak shaft vibration as measured on the coupling end.

14.2.12.3.37 Test Number 71 - Residual Heat Removal System

14.2.12.3.37.1 Purpose. The purpose of this test is to demonstrate the ability of the RHR system to remove heat from the reactor system so that the refueling and nuclear system servicing can be performed.

14.2.12.3.37.2 Prerequisites. The preoperational tests have been completed, reviewed by POC, and the Plant Manager has approved the test procedures and initiation of testing. Instrumentation has been checked or calibrated as appropriate.

14.2.12.3.37.3 Description. During the first suitable reactor cooldown, the shutdown cooling mode of the RHR system will be demonstrated. Unfortunately, the decay heat load is insignificant during the startup test period. Use of the mode with low core exposure could result in exceeding the 100°F/hr cooldown rate of the vessel if both RHR heat exchangers are used simultaneously. Late in the test program after accumulating significant core exposure, this demonstration would more adequately demonstrate the heat exchanger capacity.

14.2.12.3.37.4 Criteria.

Level 1

Not applicable.

Level 2

The RHR system shall be capable of operating in the suppression pool cooling and shutdown cooling modes (with each heat exchanger) at the flow rates and temperature differentials determined by the flow rates and temperature differentials indicated on the process diagrams.

14.2.12.3.38 Test Number 72 - Drywell Atmosphere Cooling System

14.2.12.3.38.1 Purpose. The purpose of this test is to verify the ability of the drywell atmosphere cooling system to maintain design conditions in the drywell during operating conditions and post scram conditions.

14.2.12.3.38.2 Prerequisites. The preoperational tests have been completed, reviewed by POC, and the Plant Manager has approved the test procedures and initiation of testing. Instrumentation has been checked or calibrated as appropriate.

14.2.12.3.38.3 Description. During heatup and power operation, data will be taken to ascertain that the drywell atmospheric conditions are within design limits.

14.2.12.3.38.4 Criteria.

Level 1

Not applicable.

Level 2

The drywell cooling system shall maintain drywell air temperatures at or below the design values as specified for the NSSS equipment.

14.2.12.3.39 Test Number 73 - Cooling Water Systems

14.2.12.3.39.1 Purpose. The purpose of the test is to verify that the heat removal performance of the SW system, the reactor building RCC system, and the plant service water (TSW) system is adequate.

14.2.12.3.39.2 Prerequisites. The preoperational tests have been completed, reviewed by POC, and the Plant Manager has approved the test procedures and initiation of testing. Instrumentation has been checked or calibrated as appropriate.

14.2.12.3.39.3 Description. The SW, the RCC, and the TSW systems heat exchanger heat transport capabilities will be verified. Verification will be conducted in the following manner. The system water flow rate through each heat exchanger will be measured. The system water

temperature drop across each heat exchanger will also be measured. From these acquired water flow rates and temperature drop data, the heat transport rates will be calculated. Where available, the calculated heat transport data will be compared directly with design calculations to determine acceptability. For those systems in which no design calculations of the heat transport rate have been directly calculated, the heat removal performance of the particular heat exchanger will be considered acceptable if the components serviced by the cooling system exhibit proper operation. If proper performance is not experienced, adjustments in the heat transport capability (i.e., increased flow to the heat exchanger or increased flow to a particular load) would be made. In addition to the heat exchanger heat transport rate verification, the actual SW pump head will be determined for all three SW pumps. This actual SW pump head will be compared to the design requirements for acceptability.

14.2.12.3.39.4 Criteria.

Level 1

Not applicable.

Level 2

The system heat transport parameters either meet the requirements of the design specifications, or provide adequate cooling to the components serviced such that they operate satisfactorily.

14.2.12.3.40 Test Number 74 - Offgas System

14.2.12.3.40.1 Purpose. The purposes of this test are to verify the proper operation of the offgas system over its expected operating parameters and to determine the performance of the activated carbon adsorbers.

14.2.12.3.40.2 Prerequisites. The preoperational tests have been completed, reviewed by POC, and the Plant Manager has approved the test procedures and initiation of testing. Instrumentation has been checked or calibrated as appropriate.

14.2.12.3.40.3 Description. The pressure, temperature, relative humidity, system flow, and percentage of radiolytic hydrogen in the offgas are periodically monitored during startup and at steady-state conditions. Prior to initial steam flow to the main condenser, charcoal bed hold-up times will be measure experimentally using a pulsed Krypton-85 gas injection technique. The charcoal bed dynamic adsorption coefficient will then be determined by established analytical methods. The performance of the catalytic recombiner will be compared the catalytic recombiner guaranteed performance curve.

14.2.12.3.40.4 Criteria.

Level 1

The release of radioactive gaseous and particulate effluents must not exceed the limits specified in the Technical Specifications. There shall be no loss of flow of dilution steam to the noncondensing stage when the steam jet air ejectors are pumping.

Level 2

The system flow, pressure, temperature, and relative humidity shall comply with design specifications. The catalytic recombiner, the hydrogen analyzer, the activated carbon bed, and the filters shall be performing their required function.

Table 14.2-1

Preoperational Tests

Section Reference	*Title*
14.2.12.1.1	*Reactor Feedwater System*
14.2.12.1.2	*Condensate System*
14.2.12.1.3	*Fire Protection System*
14.2.12.1.4	*Reactor Water Cleanup System*
14.2.12.1.5	*Standby Liquid Control System*
14.2.12.1.6	*Nuclear Boiler System*
14.2.12.1.7	*Residual Heat Removal System*
14.2.12.1.8	*Reactor Core Isolation Cooling*
14.2.12.1.9	*Reactor Recirculation System and Control*
14.2.12.1.10	*Reactor Manual Control System*
14.2.12.1.11	*Control Rod Drive Hydraulic System*
14.2.12.1.12	*Fuel Handling and Vessel Servicing Equipment*
14.2.12.1.13	*Low Pressure Core Spray System*
14.2.12.1.14	*High Pressure Core Spray*
14.2.12.1.15	*Fuel Pool Cooling and Cleanup System*
14.2.12.1.16	*Leak Detection System*
14.2.12.1.17	*Liquid and Solid Radwaste System*
14.2.12.1.18	*Reactor Protection System*
14.2.12.1.19	*Neutron Monitoring System*
14.2.12.1.20	*Traversing In-Core Probe System*
14.2.12.1.21	*Rod Worth Minimizer System*
14.2.12.1.22	*Process Radiation Monitoring System*
14.2.12.1.23	*Area Radiation Monitoring System*

Table 14.2-1

Preoperational Tests (Continued)

Section Reference	Title
14.2.12.1.24	*Process Computer Interface System*
14.2.12.1.25	*Rod Sequence Control System*
14.2.12.1.26	*Remote Shutdown*
14.2.12.1.27	*Offgas System*
14.2.12.1.28	*Environs Radiation Monitoring System*
14.2.12.1.29	*Main Steam System*
14.2.12.1.30	*Radwaste Building Heating, Ventilation, and Air Conditioning System*
14.2.12.1.31	*Closed Cooling Water System*
14.2.12.1.32	*Primary Containment Atmospheric Control System*
14.2.12.1.33	*Primary Containment Cooling System*
14.2.12.1.34	*Primary Containment Instrument Air System*
14.2.12.1.35	*Primary Containment Atmospheric Monitoring System*
14.2.12.1.36	*Standby Gas Treatment System*
14.2.12.1.37	*Loss of Power and Safety Testing*
14.2.12.1.38	*Instrument Power System*
14.2.12.1.39	*Emergency Lighting*
14.2.12.1.40	*Standby Alternating Current Power System*
14.2.12.1.41	*250-V Direct Current Distribution System*
14.2.12.1.42	*125-V Direct Current Distribution System*
14.2.12.1.43	*24-V Direct Current Distribution System*
14.2.12.1.44	*Plant Service Water System*
14.2.12.1.45	*Standby Service Water System*
14.2.12.1.46	*Plant Communication System*

Table 14.2-1

Preoperational Tests (Continued)

Section Reference	*Title*
14.2.12.1.47	*Reactor Building Emergency Cooling System*
14.2.12.1.48	*Control Cable and Critical Switchgear Rooms Heating, Ventilation, and Air Conditioning System*
14.2.12.1.49	*Standby Service Water Pump House Heating and Ventilating System*
14.2.12.1.50	*Reactor Building Crane*
14.2.12.1.51	*Primary Containment Integrated Leak Rate Test*
14.2.12.1.52	*Secondary Containment Integrated Leak Rate Test*
14.2.12.1.53	*Diesel Generator Building Heating and Ventilating System*

Table 14.2-2

Major Plant Transients

			Test Condition		
		Approximate Power (% rated)	*20-25*	*60-75*	*95-100*
Test	*Title*	*Approximate Core Flow (% rated)*	*37*	*100*	*100*
23C	*Feedwater pump trip*				*X*
23B	*Loss of feedwater heating*				*X*
25	*MSIVs (all valves, full isolation)*				*X*
27	*T-G stop valve fast close*			*X*	
27	*T-G control valve fast close*		*X*		*X*
28	*Shutdown from outside control room*		*X*		
30	*Recirculation pump trips*			*X*	*X*
31	*Loss of generator and offsite power*		*X*		
	Test condition		*1, 2*	*3*	*6*

Table 14.2-3

Stability Tests

			Test Condition					
		Approximate Power (% rated)	*20*	*40*	*60-75*	*60-75*	*95-100*	*40-50*
Test	*Title*	*Approximate Core Flow (% rated)*	*37*	*50*	*100*	*55*	*100*	*NC*
21	*Core power - void mode response*					*X*		*X*
22	*Pressure regulator setpoint changes*		*X*	*X*	*X*	*X*	*X*	*X*
22	*Pressure regulator backup regulator*		*X*	*X*	*X*	*X*	*X*	*X*
23A	*Feedwater system: water level setpoint change*		*X*	*X*	*X*	*X*	*X*	*X*
23B	*Feedwater system: heater loss*						*X*	
24	*Turbine valve surveillance*					*X*[a]	*X*[b]	
29	*Recirculation flow control system*		*X*	*X*	*X*	*X*	*X*	*X*
	Test condition		*1*	*2*	*3*	*5*	*6*	*4*

[a] *45-65% Power*
[b] *75-90% Power*

Table 14.2-4

Power Ascension Test Program

Test	*Name*	*Cold Test or Open RPV*	*Heat Up*	*Test Conditions*[a]						
				1	*2*	*3*	*4*	*5*	*6*	*Warranty*
1	*Chemical and radiochemical*	*X*	*X*	*X*	*X*	*X*			*X*	
2	*Radiation measurements*	*X*	*X*	*X*	*X*	*X*			*X*	
3	*Fuel loading*	*X*								
4	*Full core shutdown margin*	*X*								
5	*Control rod drive*	*X*	*X*		*X*[b]	*X*[b]			*X*[b]	
6	*SRM performance and control rod sequence*	*X*	*X*	*X*	*X*			*X*	*X*	
7	*Not applicable*									
8	*Not applicable*									
9	*See 16B*									
10	*IRM performance*	*X*	*X*	*X*						
11	*LPRM calibration*		*X*	*X*		*X*			*X*	

Table 14.2-4

Power Ascension Test Program (Continued)

Test	Name	Cold Test or Open RPV	Heat Up	Test Conditions[a]						
				1	2	3	4	5	6	Warranty
12	APRM calibration		X	X	X	X		X	X	X
13	Process computer	X	X	X[c]						
14	RCIC		X	X						
15	Not applicable									
16A	Selected process temperatures		X	X	X	X	X		X	
16B	Water level reference leg temperature measurement		X	X	X	X	X	X	X	
17	System expansion and piping vibration	X	X	X	X	X			X	
18	Core power distribution					X			X	
19	Core performance			X	X	X	X	X	X	X
20	Steam production									X
21	Core power void mode response						X	X		

Table 14.2-4

Power Ascension Test Program (Continued)

Test	Name	Cold Test or Open RPV	Heat Up	Test Conditions[a] 1	2	3	4	5	6	Warranty
22	Pressure regulator: setpoint changes			X,BP	X,BP	X,NO BP,M	X,BP	X,BP, M	X,M, BP	
	Backup regulator			X,BP	X,BP	X,NO BP,M	X,BP	X,NO, BP,M	X,M, BP	
23	Feedwater system									
	C feedwater pump trip								M[d]	
	A water level setpoint change			X	X	X,M	X	X	X,M	
	B heater loss								X[e]	
	D maximum runout capability		X[f]	X[f]			X	X		
24	Turbine valve surveillance						X,[g,h] SP	X,[i,j] SP		
25	MSIVs: each valve		X	X,[c] S						
	one valve						X,[g,i,j] X,[k] SP			

Table 14.2-4

Power Ascension Test Program (Continued)

Test	Name	Cold Test or Open RPV	Heat Up	Test Conditions[a] 1	2	3	4	5	6	Warranty
	full isolation							*X,*[b] *X,*[l] *SD*		
26	*Relief valves:*									
	Flow demonstration			*X*[l,m]						
	Operational		*X*	*X*[m]						
27	*Turbine stop valve*					*X*[b,l]				
	Stop					*SD*				
	Generator load				*X,BP*				*X*[b,l]	
	Rejection								*X,*[n] *SD*	
28	*Shutdown from outside control room*			*X*					*X*[o]	

Table 14.2-4

Power Ascension Test Program (Continued)

Test	*Name*	*Cold Test or Open RPV*	*Heat Up*	*Test Conditions*[a]						
				1	*2*	*3*	*4*	*5*	*6*	*Warranty*
29	*Recirculation flow control system*	*L*		*L*	*M,*[m] *X,*[m] *L*[m]	*X,*[m] *L,*[m] *M,*[m] *A*[m]	*L*[g]	*M,*[g] *X*[g]	*L,*[g] *X*[g]	
30	*Recirculation system:*									
	Trip one pump					*X*[l,n]			*X*[l,n]	
	Trip two pumps					*X*[l,n]				
	System performance				*X*	*X*[l,m]	*X*[g]		*X*[l]	
	Runback					*X*[d]				
	Noncavitation verification					*X*				
31	*Loss of T-G and offsite power*				*X,*[b,l] *SD*					
32	*Not applicable*									
33	*Not applicable*									

Table 14.2-4

Power Ascension Test Program (Continued)

Test	Name	Cold Test or Open RPV	Heat Up	Test Conditions[a] 1	2	3	4	5	6	Warranty
34	RPV Internals				X[m]	X[m]		X[g]	X[g]	
36-69	Not applicable									
70	Reactor water cleanup system		X							
71	Residual heat removal system								X	
72	Drywell atmosphere cooling		X		X	X			X	
73	Cooling water system		X						X	
74	Offgas system	X	X	X		X			X	

[a] See Figure 14.2-1 for test conditions region map.

[b] Perform test 5, timing of four slowest control rods in conjunction with these scrams.

[c] Between test conditions 1 and 3.

[d] Demonstrate recirculation system runback feature.

[e] 80%-90% power.

[f] At either heatup or test condition 1.

Table 14.2-4

Power Ascension Test Program (Continued)

[g] *Between or at test conditions 5 and 6.*

[h] *Between 45% and 65% power on 100% load line.*

[i] *Future maximum power test point.*

[j] *Determine maximum power without scram.*

[k] *Between 40% and 55% power on the 100% load line.*

[l] *Do test 17 in conjunction with this test.*

[m] *Between test conditions 2 and 3.*

[n] *Perform test 34 in conjunction with this test.*

[o] *After one of the scram transients from test condition, during the reactor cooldown, the last part of the shutdown from outside the control room test will be completed by demonstrating the operation of the shutdown cooling mode of RHR from the remote shutdown panel.*

LEGEND

L = Local position command mode operation, POS
M = Flux command mode operation, FLX
X = Combined flow command mode operation, FLO
A = Automatic load following mode operation, ALF
SP = Scram possibility
SD = Scram definite
BP = Bypass valve response

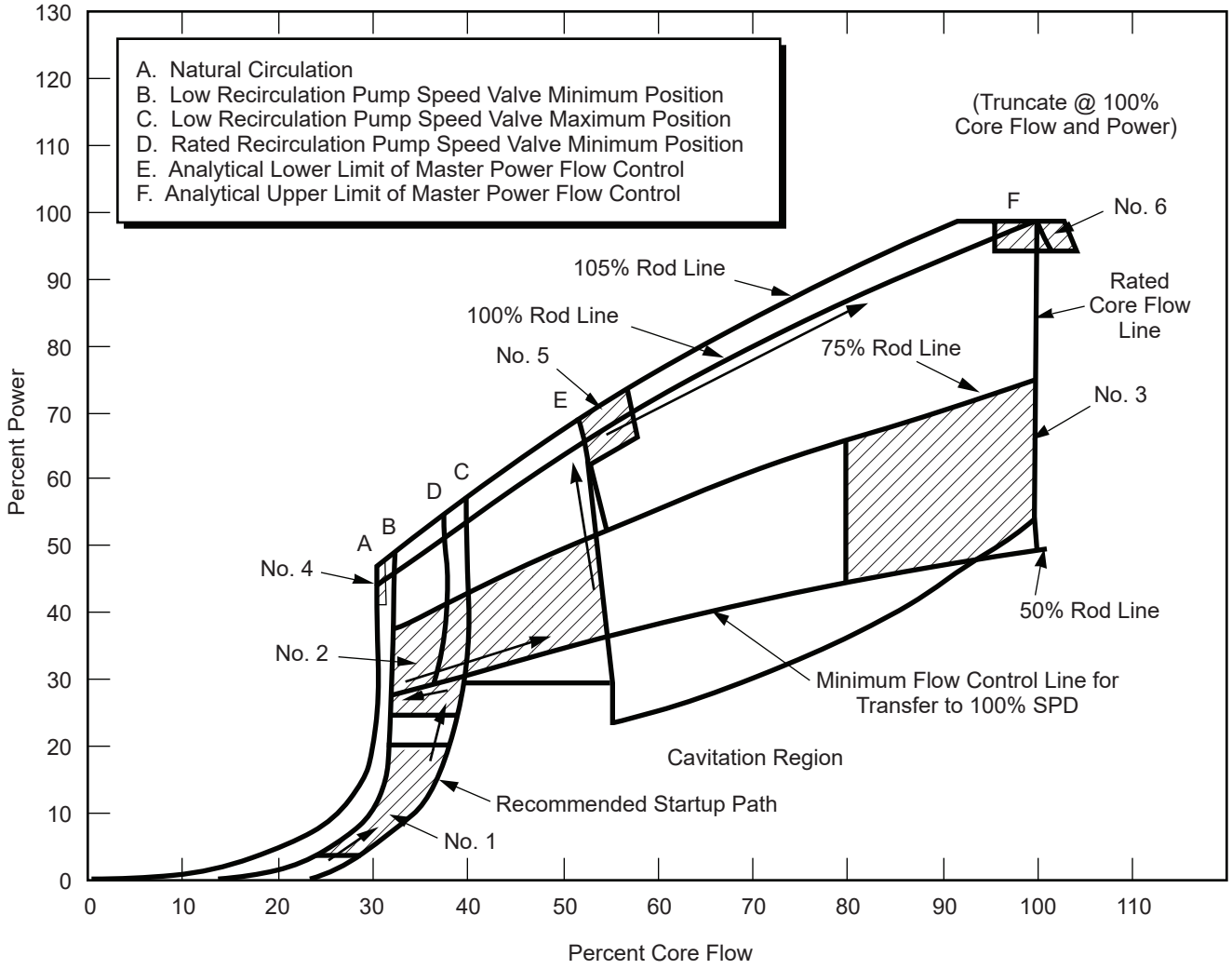

Condition (TC)	
1	Before main generator synchronization and recirc pumps operating on low frequency power supply from approximately 5 to 20 percent thermal power
2	Between 50% and 75% control rod lines, at or below the analytical lower limit of master flow control mode
3	From 50% to 75% control rod lines and core flow between 80% and maximum allowable
4	Natural circulation and within 5% of the intersection with 100% rod line
5	Mid-power range within 5% of 100% control rod line and 0 to +5% core flow of the minimum flow line, for master flow control in manual mode, and for automatic power control in auto mode
6	Within 0 to –5% of rated thermal power, and within 5% of rated core flow rate

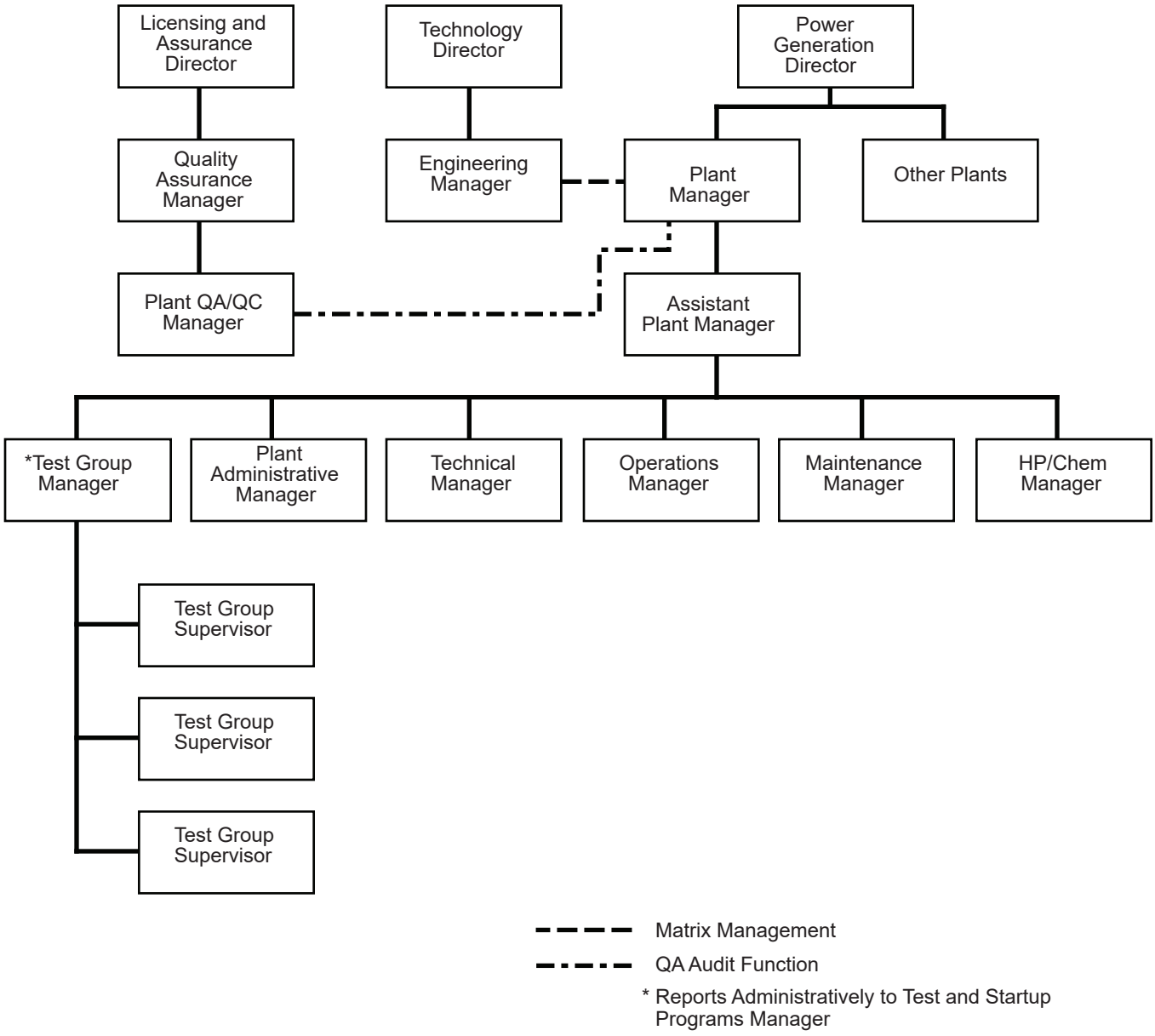

Columbia Generating Station Final Safety Analysis Report	**Test and Startup Relation to Other Energy Northwest Departments**		
	Draw. No. **960222.77**	Rev.	Figure **14.2-2**

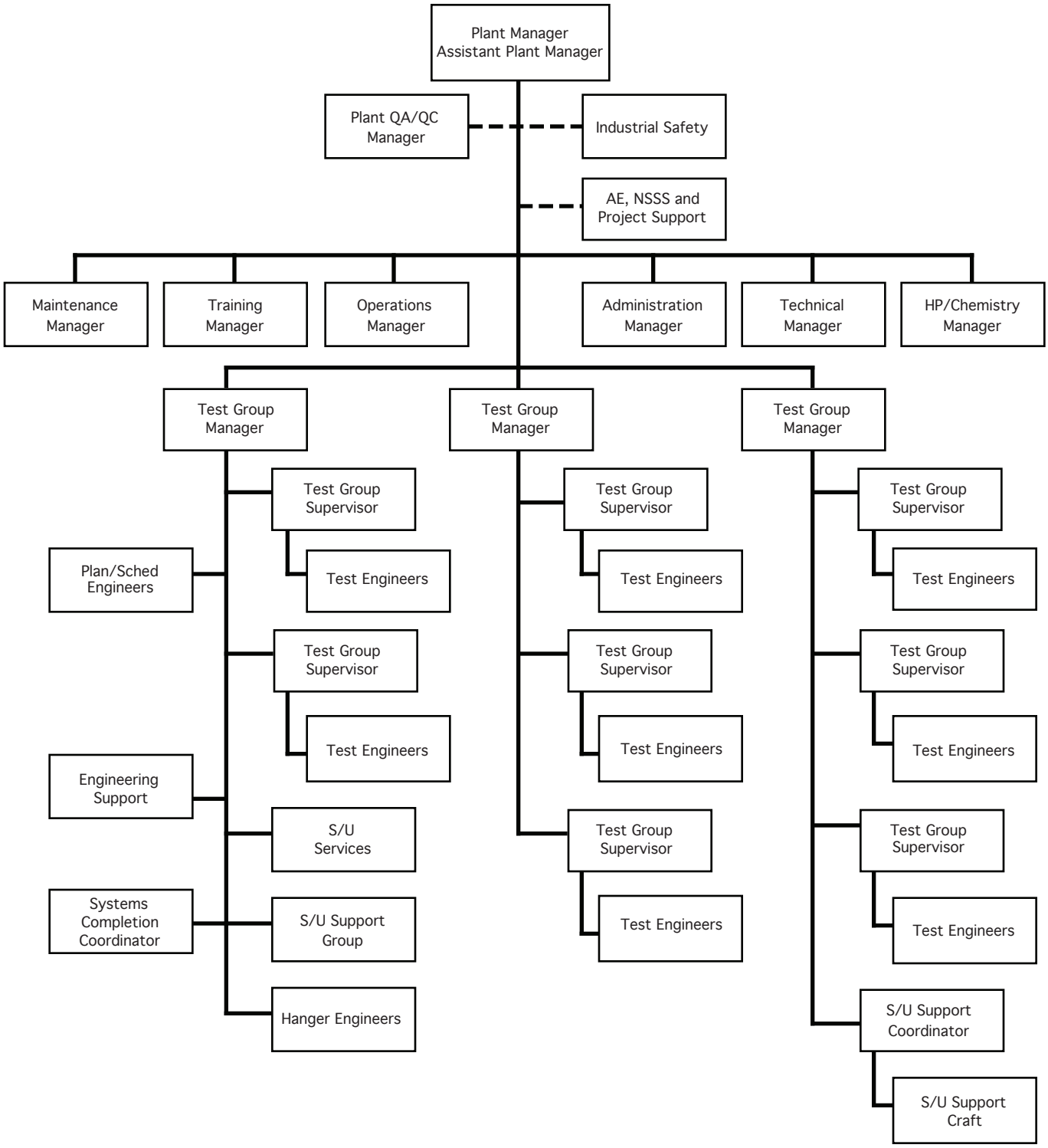

Columbia Generating Station
Final Safety Analysis Report

CGS Startup Organization

Draw. No. 960222.78	Rev.	Figure 14.2-3

LEGEND:
1 PREPARE PREOP TEST PROCEDURES
2 REVIEW
3 APPROVE
4 TEST ACTIVITY

NOTE: TIME SCALE LISTED ACROSS THE BOTTOM OF PAGE IS IN MONTHS

Amendment 53
November 1998

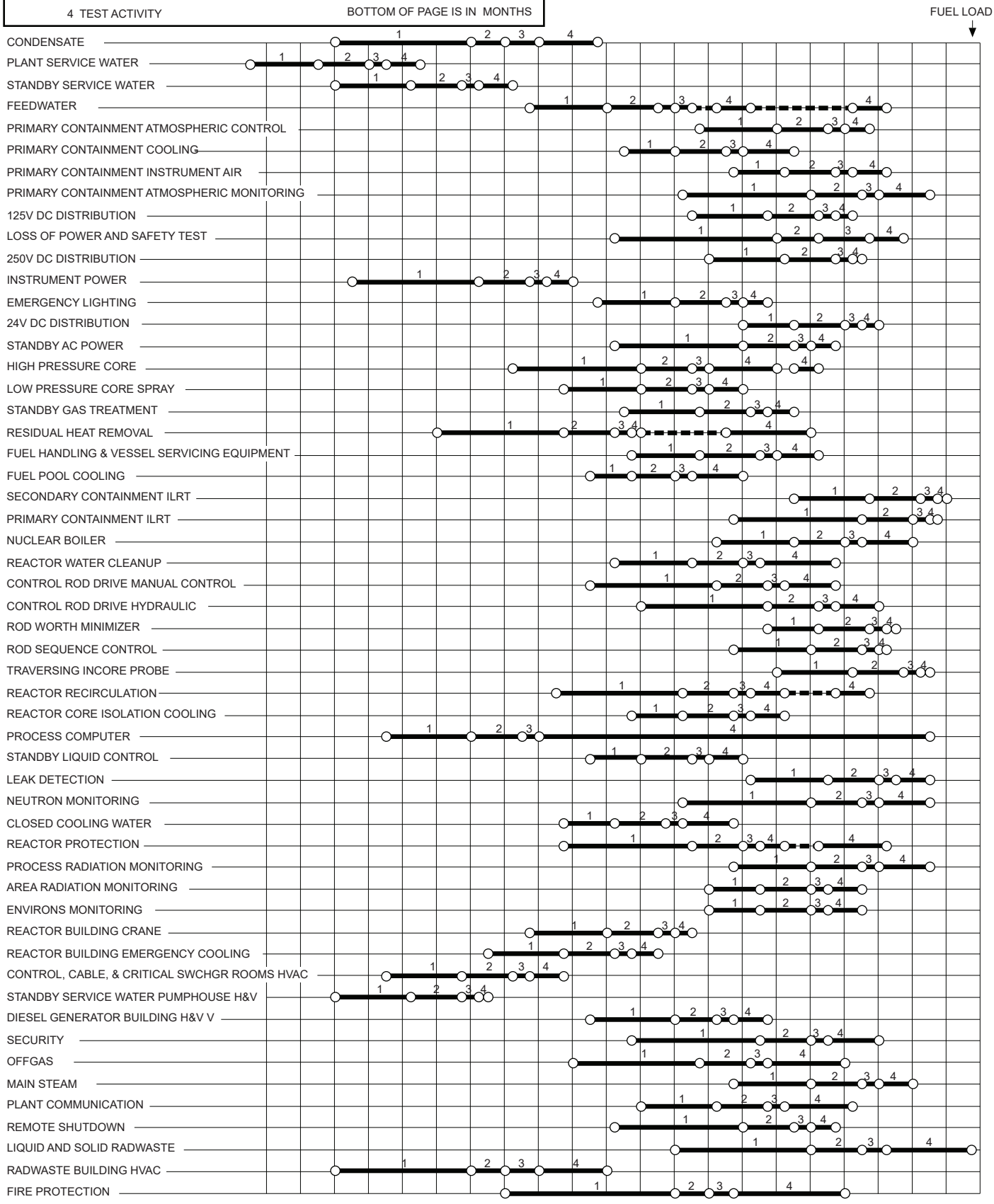

Columbia Generating Station
Final Safety Analysis Report

Preoperational Test Schedule

Draw. No. 960690.83	Rev.	Figure 14.2-4

Form No. 960690

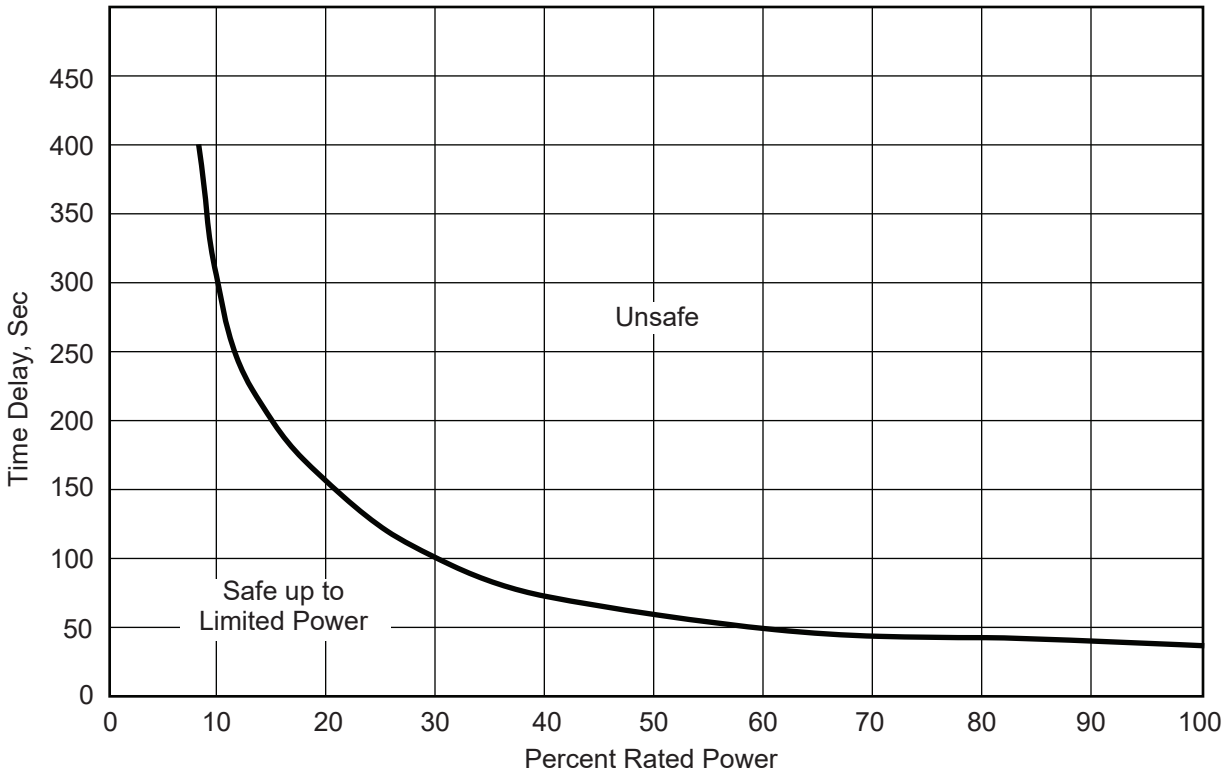

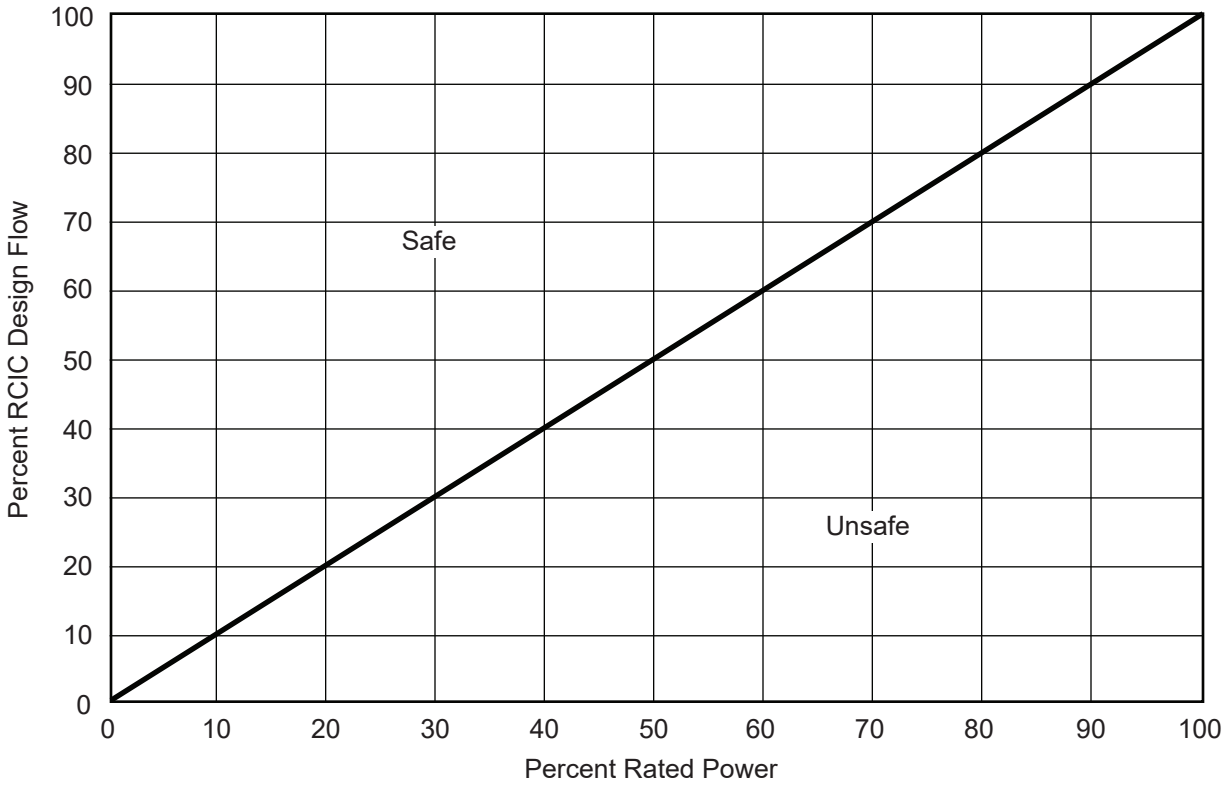

Columbia Generating Station Final Safety Analysis Report	RCIC Acceptance Criteria Curves for Capacity and Actuation Time		
	Draw. No. 960690.82	Rev.	Figure 14.2-5

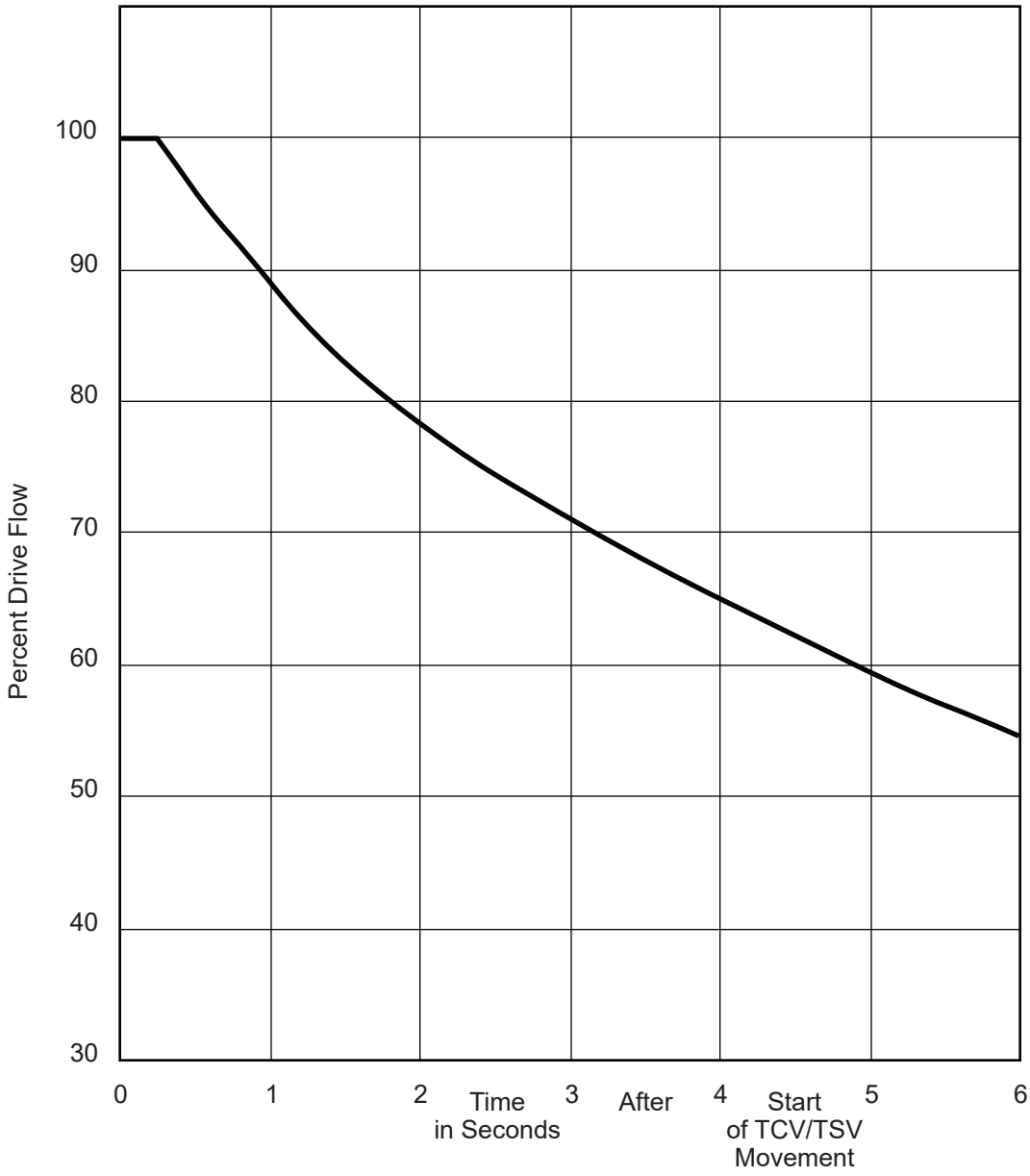

Columbia Generating Station **Final Safety Analysis Report**	**Maximum Acceptable Drive Flow Response**		
	Draw. No. **960690.81**	Rev.	Figure **14.2-6**

Chapter 15

ACCIDENT ANALYSES

TABLE OF CONTENTS

Section — Page

15.0 GENERAL 15.0-1
15.0.1 ANALYTICAL OBJECTIVE 15.0-3
15.0.2 ANALYTICAL CATEGORIES 15.0-3
15.0.2.1 Single Loop Operation (SLO) 15.0-4
15.0.3 EVENT EVALUATION 15.0-5
15.0.3.1 Identification of Causes and Frequency Classification 15.0-5
15.0.3.1.1 Unacceptable Results for Incidents of Moderate Frequency [Anticipated (Expected) Operational Transients] 15.0-6
15.0.3.1.2 Unacceptable Results for Infrequent Incidents [Abnormal (Unexpected) Operational Transients] 15.0-6
15.0.3.1.3 Unacceptable Results for Limiting Faults [Design-Basis (Postulated) Accidents] 15.0-6
15.0.3.2 Sequence of Events and Systems Operation 15.0-7
15.0.3.2.1 Single Failures or Operator Errors 15.0-8
15.0.3.2.1.1 General 15.0-8
15.0.3.2.1.2 Initiating Event Analysis 15.0-8
15.0.3.2.1.3 Single Active Component Failure or Single Operator Error Analysis 15.0-9
15.0.3.3 Core and System Performance 15.0-9
15.0.3.3.1 Mathematical Model 15.0-10
15.0.3.3.2 Input Parameters and Initial Conditions for Analyzed Events 15.0-11
15.0.3.3.3 Consideration of Uncertainties 15.0-11
15.0.3.3.3.1 Core Flow Uncertainty Analysis 15.0-12
15.0.3.3.4 Results 15.0-13
15.0.3.4 Barrier Performance 15.0-14
15.0.3.5 Radiological Consequences 15.0-14
15.0.4 REFERENCES 15.0-14

15.1 DECREASE IN REACTOR COOLANT TEMPERATURE 15.1-1
15.1.1 LOSS OF FEEDWATER HEATING 15.1-1
15.1.1.1 Identification of Causes and Frequency Classification 15.1-1
15.1.1.1.1 Identification of Causes 15.1-1
15.1.1.1.2 Frequency Classification 15.1-1
15.1.1.2 Sequence of Events and Systems Operation 15.1-1
15.1.1.2.1 The Effect of Single Failures and Operator Errors 15.1-2

Chapter 15

ACCIDENT ANALYSES

TABLE OF CONTENTS (Continued)

Section Page

15.1.1.3 Core and System Performance 15.1-2
15.1.1.3.1 Mathematical Model 15.1-2
15.1.1.3.2 Input Parameters and Initial Conditions 15.1-2
15.1.1.3.3 Results 15.1-3
15.1.1.3.4 Considerations of Uncertainties 15.1-3
15.1.1.4 Barrier Performance 15.1-3
15.1.1.5 Radiological Consequences 15.1-3
15.1.2 FEEDWATER CONTROLLER FAILURE - MAXIMUM DEMAND 15.1-3
15.1.2.1 Identification of Causes and Frequency Classification 15.1-3
15.1.2.1.1 Identification of Causes 15.1-3
15.1.2.1.2 Frequency Classification 15.1-3
15.1.2.2 Sequence of Events and Systems Operation 15.1-4
15.1.2.2.1 Sequence of Events and Systems Operation - Single Loop Operation ... 15.1-4
15.1.2.2.2 The Effect of Single Failures and Operator Errors 15.1-5
15.1.2.3 Core and System Performance 15.1-5
15.1.2.3.1 Mathematical Model 15.1-5
15.1.2.3.2 Input Parameters and Initial Conditions 15.1-6
15.1.2.3.3 Results 15.1-6
15.1.2.3.4 Consideration of Uncertainties 15.1-7
15.1.2.4 Barrier Performance 15.1-7
15.1.2.5 Radiological Consequences 15.1-7
15.1.3 PRESSURE REGULATOR FAILURE - OPEN 15.1-7
15.1.3.1 Identification of Causes and Frequency Classification 15.1-7
15.1.3.1.1 Identification of Causes 15.1-7
15.1.3.1.2 Frequency Classification 15.1-7
15.1.3.2 Sequence of Events and Systems Operation 15.1-8
15.1.3.2.1 Sequence of Events 15.1-8
15.1.3.2.2 Systems Operation 15.1-8
15.1.3.2.3 The Effect of Single Failures and Operator Errors 15.1-8
15.1.3.3 Core and System Performance 15.1-9
15.1.3.3.1 Mathematical Model 15.1-9
15.1.3.3.2 Input Parameters and Initial Conditions 15.1-9
15.1.3.3.3 Results 15.1-9
15.1.3.3.4 Consideration of Uncertainties 15.1-9
15.1.3.4 Barrier Performance 15.1-10
15.1.3.5 Radiological Consequences 15.1-10

Chapter 15

ACCIDENT ANALYSES

TABLE OF CONTENTS (Continued)

Section — Page

15.1.4 INADVERTENT SAFETY/RELIEF VALVE OPENING 15.1-10
15.1.4.1 Identification of Causes and Frequency Classification 15.1-10
15.1.4.1.1 Identification of Causes 15.1-10
15.1.4.1.2 Frequency Classification 15.1-10
15.1.4.2 Sequence of Events and Systems Operation 15.1-11
15.1.4.2.1 Sequence of Events 15.1-11
15.1.4.2.2 Systems Operation 15.1-11
15.1.4.2.3 The Effect of Single Failures and Operator Errors 15.1-11
15.1.4.3 Core and System Performance 15.1-11
15.1.4.3.1 Mathematical Model 15.1-11
15.1.4.3.2 Input Parameters and Initial Conditions 15.1-11
15.1.4.3.3 Results 15.1-12
15.1.4.4 Barrier Performance 15.1-12
15.1.4.5 Radiological Consequences 15.1-12
15.1.5 SPECTRUM OF STEAM PIPING FAILURES INSIDE AND OUTSIDE OF CONTAINMENT IN A PRESSURIZED WATER REACTOR 15.1-12
15.1.6 INADVERTENT RESIDUAL HEAT REMOVAL SHUTDOWN COOLING OPERATION 15.1-12
15.1.6.1 Identification of Causes and Frequency Classification 15.1-13
15.1.6.1.1 Identification of Causes 15.1-13
15.1.6.1.2 Frequency Classification 15.1-13
15.1.6.2 Sequence of Events and Systems Operation 15.1-13
15.1.6.2.1 Sequence of Events 15.1-13
15.1.6.2.2 System Operation 15.1-13
15.1.6.2.3 Effect of Single Failures and Operator Action 15.1-14
15.1.6.3 Core and System Performance 15.1-14
15.1.6.4 Barrier Performance 15.1-14
15.1.6.5 Radiological Consequences 15.1-14
15.1.7 REFERENCES 15.1-14

15.2 INCREASE IN REACTOR PRESSURE 15.2-1
15.2.1 PRESSURE REGULATOR FAILURE - CLOSED 15.2-1
15.2.1.1 Identification of Causes and Frequency Classification 15.2-1
15.2.1.1.1 Identification of Causes 15.2-1
15.2.1.1.2 Frequency Classification 15.2-1

Chapter 15

ACCIDENT ANALYSES

TABLE OF CONTENTS (Continued)

Section — Page

15.2.1.2 Sequence of Events and Systems Operation 15.2-1
15.2.1.2.1 Sequence of Events 15.2-1
15.2.1.2.2 Systems Operation 15.2-2
15.2.1.2.3 The Effect of Single Failures and Operator Errors 15.2-2
15.2.1.3 Core and System Performance 15.2-2
15.2.1.3.1 Mathematical Model 15.2-2
15.2.1.3.2 Input Parameters and Initial Conditions 15.2-3
15.2.1.3.3 Results 15.2-3
15.2.1.3.4 Consideration of Uncertainties 15.2-3
15.2.1.4 Barrier Performance 15.2-3
15.2.1.5 Radiological Consequences 15.2-3
15.2.2 GENERATOR LOAD REJECTION 15.2-4
15.2.2.1 Identification of Causes and Frequency Classification 15.2-4
15.2.2.1.1 Identification of Causes 15.2-4
15.2.2.1.2 Frequency Classification 15.2-4
15.2.2.1.2.1 Generator Load Rejection 15.2-4
15.2.2.1.2.2 Generator Load Rejection with Bypass Failure 15.2-4
15.2.2.2 Sequence of Events and System Operation 15.2-4
15.2.2.2.1 Sequence of Events 15.2-5
15.2.2.2.1.1 Generator Load Rejection - Turbine Control Valve Fast Closure 15.2-5
15.2.2.2.1.2 Generator Load Rejection with Failure of Bypass 15.2-5
15.2.2.2.2 System Operation 15.2-5
15.2.2.2.2.1 Generator Load Rejection with Bypass 15.2-5
15.2.2.2.2.2 Generator Load Rejection with Failure of Bypass 15.2-5
15.2.2.2.3 The Effect of Single Failures and Operator Errors 15.2-5
15.2.2.3 Core and System Performance 15.2-6
15.2.2.3.1 Mathematical Model 15.2-6
15.2.2.3.1.1 Generator Load Rejection with Bypass 15.2-6
15.2.2.3.1.2 Generator Load Rejection with Bypass Failure 15.2-6
15.2.2.3.2 Input Parameters and Initial Conditions 15.2-7
15.2.2.3.3 Results 15.2-7
15.2.2.3.3.1 Generator Load Rejection with Bypass 15.2-7
15.2.2.3.3.2 Generator Load Rejection with Failure of Bypass 15.2-7
15.2.2.3.4 Consideration of Uncertainties 15.2-7
15.2.2.4 Barrier Performance 15.2-8
15.2.2.4.1 Generator Load Rejection 15.2-8

Chapter 15

ACCIDENT ANALYSES

TABLE OF CONTENTS (Continued)

Section Page

15.2.2.4.2 Generator Load Rejection with Failure of Bypass 15.2-8
15.2.2.5 Radiological Consequences 15.2-8
15.2.3 TURBINE TRIP 15.2-8
15.2.3.1 Identification of Causes and Frequency Classification 15.2-8
15.2.3.1.1 Identification of Causes 15.2-8
15.2.3.1.2 Frequency Classification 15.2-8
15.2.3.1.2.1 Turbine Trip 15.2-8
15.2.3.1.2.2 Turbine Trip with Failure of Bypass 15.2-9
15.2.3.2 Sequence of Events and Systems Operation 15.2-9
15.2.3.2.1 Sequence of Events 15.2-9
15.2.3.2.1.1 Turbine Trip 15.2-9
15.2.3.2.1.2 Turbine Trip with Failure of Bypass 15.2-9
15.2.3.2.2 Systems Operation 15.2-9
15.2.3.2.2.1 Turbine Trip 15.2-9
15.2.3.2.2.2 Turbine Trip with Failure of Bypass 15.2-9
15.2.3.2.2.3 Turbine Trip at Low Power with Failure of Bypass 15.2-9
15.2.3.2.3 The Effect of Single Failures and Operator Errors 15.2-10
15.2.3.2.3.1 Turbine Trips at Power Levels Greater Than 29.5% Nuclear Boiler Rated 15.2-10
15.2.3.2.3.2 Turbine Trips at Power Levels Less Than 29.5% Nuclear Boiler Rated 15.2-10
15.2.3.3 Core and System Performance 15.2-10
15.2.3.3.1 Mathematical Model 15.2-10
15.2.3.3.1.1 Turbine Trip with Bypass 15.2-10
15.2.3.3.1.2 Turbine Trip with Bypass Failure 15.2-10
15.2.3.3.2 Input Parameters and Initial Conditions 15.2-10
15.2.3.3.3 Results 15.2-11
15.2.3.3.3.1 Turbine Trip 15.2-11
15.2.3.3.3.2 Turbine Trip with Failure of Bypass 15.2-11
15.2.3.3.3.3 Turbine Trip with Bypass Valve Failure, Low Power 15.2-11
15.2.3.3.4 Considerations of Uncertainties 15.2-12
15.2.3.4 Barrier Performance 15.2-12
15.2.3.4.1 Turbine Trip 15.2-12
15.2.3.4.2 Turbine Trip with Failure of Bypass 15.2-12
15.2.3.4.2.1 Turbine Trip with Failure of Bypass at Low Power 15.2-12
15.2.3.5 Radiological Consequences 15.2-12

Chapter 15

ACCIDENT ANALYSES

TABLE OF CONTENTS (Continued)

Section — Page

15.2.4 MAIN STEAM LINE ISOLATION VALVE CLOSURES 15.2-12
15.2.4.1 Identification of Causes and Frequency Classification 15.2-13
15.2.4.1.1 Identification of Causes 15.2-13
15.2.4.1.2 Frequency Classification 15.2-13
15.2.4.1.2.1 Closure of All Main Steam Line Isolation Valves 15.2-13
15.2.4.1.2.2 Closure of One Main Steam Line Isolation Valve 15.2-13
15.2.4.2 Sequence of Events and Systems Operation 15.2-13
15.2.4.2.1 Sequence of Events 15.2-13
15.2.4.2.2 Systems Operation 15.2-14
15.2.4.2.2.1 Closure of All Main Steam Line Isolation Valves 15.2-14
15.2.4.2.2.2 Closure of One Main Steam Line Isolation Valve 15.2-14
15.2.4.2.3 The Effect of Single Failures and Operator Errors 15.2-14
15.2.4.3 Core and System Performance 15.2-14
15.2.4.3.1 Mathematical Model 15.2-14
15.2.4.3.2 Input Parameters and Initial Conditions 15.2-15
15.2.4.3.3 Results 15.2-15
15.2.4.3.3.1 Closure of All Main Steam Line Isolation Valves 15.2-15
15.2.4.3.3.2 Closure of One Main Steam Line Isolation Valve 15.2-15
15.2.4.3.4 Considerations of Uncertainties 15.2-16
15.2.4.4 Barrier Performance 15.2-16
15.2.4.4.1 Closure of All Main Steam Line Isolation Valves 15.2-16
15.2.4.4.2 Closure of One Main Steam Line Isolation Valve 15.2-16
15.2.4.5 Radiological Consequences 15.2-16
15.2.5 LOSS-OF-CONDENSER VACUUM 15.2-17
15.2.5.1 Identification of Causes and Frequency Classification 15.2-17
15.2.5.1.1 Identification of Causes 15.2-17
15.2.5.1.2 Frequency Classification 15.2-17
15.2.5.2 Sequence of Events and Systems Operation 15.2-17
15.2.5.2.1 Sequence of Events 15.2-17
15.2.5.2.2 Systems Operation 15.2-17
15.2.5.2.3 The Effect of Single Failures and Operator Errors 15.2-18
15.2.5.3 Core and System Performance 15.2-18
15.2.5.3.1 Mathematical Model 15.2-18
15.2.5.3.2 Input Parameters and Initial Conditions 15.2-18
15.2.5.3.3 Results 15.2-18
15.2.5.3.4 Consideration of Uncertainties 15.2-18

Chapter 15

ACCIDENT ANALYSES

TABLE OF CONTENTS (Continued)

Section — Page

15.2.5.4 Barrier Performance 15.2-19
15.2.5.5 Radiological Consequences 15.2-19
15.2.6 LOSS OF ALTERNATING CURRENT POWER 15.2-20
15.2.6.1 Identification of Causes and Frequency Classification 15.2-20
15.2.6.1.1 Identification of Causes 15.2-20
15.2.6.1.1.1 Loss of Auxiliary Power Transformers 15.2-20
15.2.6.1.1.2 Loss of All Grid Connections 15.2-20
15.2.6.1.2 Frequency Classification 15.2-20
15.2.6.1.2.1 Loss of Auxiliary Power Transformers 15.2-20
15.2.6.1.2.2 Loss of All Grid Connections 15.2-20
15.2.6.2 Sequence of Events and Systems Operation 15.2-20
15.2.6.2.1 Sequence of Events 15.2-20
15.2.6.2.1.1 Loss of Auxiliary Power Transformers 15.2-20
15.2.6.2.1.2 Loss of All Grid Connections 15.2-20
15.2.6.2.2 Systems Operation 15.2-21
15.2.6.2.2.1 Loss of Auxiliary Power Transformers 15.2-21
15.2.6.2.2.2 Loss of All Grid Connections 15.2-21
15.2.6.2.3 The Effect of Single Failures and Operator Errors 15.2-21
15.2.6.3 Core and System Performance 15.2-22
15.2.6.3.1 Mathematical Model 15.2-22
15.2.6.3.2 Input Parameters and Initial Conditions 15.2-22
15.2.6.3.2.1 Loss of Auxiliary Power Transformers 15.2-22
15.2.6.3.2.2 Loss of All Grid Connections 15.2-22
15.2.6.3.3 Results 15.2-22
15.2.6.3.3.1 Loss of Auxiliary Power Transformers 15.2-22
15.2.6.3.3.2 Loss of All Grid Connections 15.2-23
15.2.6.3.4 Consideration of Uncertainties 15.2-23
15.2.6.4 Barrier Performance 15.2-23
15.2.6.4.1 Loss of Auxiliary Power Transformers 15.2-23
15.2.6.4.2 Loss of All Grid Connections 15.2-24
15.2.6.5 Radiological Consequences 15.2-24
15.2.7 LOSS-OF-FEEDWATER FLOW 15.2-24
15.2.7.1 Identification of Causes and Frequency Classification 15.2-24
15.2.7.1.1 Identification of Causes 15.2-24
15.2.7.1.2 Frequency Classification 15.2-24

Chapter 15

ACCIDENT ANALYSES

TABLE OF CONTENTS (Continued)

Section Page

15.2.7.2 Sequence of Events and Systems Operation 15.2-24
15.2.7.2.1 Sequence of Events 15.2-24
15.2.7.2.2 Systems Operation 15.2-25
15.2.7.2.3 The Effect of Single Failures and Operator Errors 15.2-25
15.2.7.3 Core and System Performance 15.2-25
15.2.7.3.1 Mathematical Model 15.2-25
15.2.7.3.2 Input Parameters and Initial Conditions 15.2-26
15.2.7.3.3 Results 15.2-26
15.2.7.3.4 Consideration of Uncertainties 15.2-26
15.2.7.4 Barrier Performance 15.2-26
15.2.7.5 Radiological Consequences 15.2-26
15.2.8 FEEDWATER LINE BREAK 15.2-26
15.2.9 FAILURE OF RESIDUAL HEAT REMOVAL SHUTDOWN COOLING 15.2-27
15.2.9.1 Identification of Causes and Frequency Classification 15.2-27
15.2.9.1.1 Identification of Causes 15.2-27
15.2.9.1.2 Frequency Classification 15.2-27
15.2.9.2 Sequence of Events and Systems Operation 15.2-27
15.2.9.2.1 Sequence of Events 15.2-27
15.2.9.2.1.1 Identification of Operator Actions 15.2-28
15.2.9.2.2 Systems Operation 15.2-28
15.2.9.2.3 The Effect of Single Failures and Operator Errors 15.2-28
15.2.9.3 Core and System Performance 15.2-28
15.2.9.4 Results 15.2-29
15.2.9.4.1 Full Power to Approximately 100 psig 15.2-29
15.2.9.4.2 Approximately 100 psig to Cold Shutdown 15.2-30
15.2.9.4.3 Temperature Response – 3462 MWt 15.2-31
15.2.9.4.4 Temperature Response – 3702 MWt 15.2-32
15.2.9.5 Barrier Performance 15.2-32
15.2.9.6 Radiological Consequences 15.2-32
15.2.10 REFERENCES 15.2-32

15.3 DECREASE IN REACTOR COOLANT SYSTEM FLOW RATE 15.3-1
15.3.1 RECIRCULATION PUMP TRIP 15.3-1
15.3.1.1 Identification of Causes and Frequency Classification 15.3-1
15.3.1.1.1 Identification of Causes 15.3-1

Chapter 15

ACCIDENT ANALYSES

TABLE OF CONTENTS (Continued)

Section Page

15.3.1.1.2 Frequency Classification 15.3-1
15.3.1.1.2.1 Trip of One Recirculation Pump 15.3-1
15.3.1.1.2.2 Trip of Two Recirculation Pumps 15.3-1
15.3.1.2 Sequence of Events and Systems Operation 15.3-2
15.3.1.2.1 Sequence of Events 15.3-2
15.3.1.2.1.1 Trip of One Recirculation Pump 15.3-2
15.3.1.2.1.2 Trip of Two Recirculation Pumps 15.3-2
15.3.1.2.2 Systems Operation 15.3-2
15.3.1.2.2.1 Trip of One Recirculation Pump 15.3-2
15.3.1.2.2.2 Trip of Two Recirculation Pumps 15.3-2
15.3.1.2.3 The Effect of Single Failures and Operator Errors 15.3-2
15.3.1.2.3.1 Trip of One Recirculation Pump 15.3-2
15.3.1.2.3.2 Trip of Two Recirculation Pumps 15.3-2
15.3.1.3 Core and System Performance 15.3-2
15.3.1.3.1 Mathematical Model 15.3-2
15.3.1.3.2 Input Parameters and Initial Conditions 15.3-3
15.3.1.3.3 Results 15.3-3
15.3.1.3.3.1 Trip of One Recirculation Pump 15.3-3
15.3.1.3.3.2 Trip of Two Recirculation Pumps 15.3-3
15.3.1.3.4 Consideration of Uncertainties 15.3-3
15.3.1.4 Barrier Performance 15.3-3
15.3.1.4.1 Trip of One Recirculation Pump 15.3-3
15.3.1.4.2 Trip of Two Recirculation Pumps 15.3-4
15.3.1.5 Radiological Consequences 15.3-4
15.3.2 RECIRCULATION FLOW CONTROL FAILURE - DECREASING FLOW 15.3-4
15.3.2.1 Identification of Causes and Frequency Classification 15.3-4
15.3.2.1.1 Identification of Causes 15.3-4
15.3.2.1.2 Frequency Classification 15.3-4
15.3.2.2 Sequence of Events and Systems Operation 15.3-4
15.3.2.2.1 Sequence of Events 15.3-4
15.3.2.2.1.1 Speed Decrease of One Recirculation Pump 15.3-4
15.3.2.2.1.2 Speed Decrease of Two Recirculation Pumps 15.3-4
15.3.2.2.2 Systems Operation 15.3-5
15.3.2.2.2.1 Speed Decrease of One Recirculation Pump 15.3-5
15.3.2.2.2.2 Speed Decrease of Two Recirculation Pumps 15.3-5

Chapter 15

ACCIDENT ANALYSES

TABLE OF CONTENTS (Continued)

Section Page

15.3.2.2.3 The Effect of Single Failures and Operator Errors 15.3-5
15.3.2.3 Core and System Performance 15.3-5
15.3.2.3.1 Mathematical Model 15.3-5
15.3.2.3.2 Input Parameters and Initial Conditions 15.3-5
15.3.2.3.2.1 Speed Decrease of One Recirculation Pump 15.3-5
15.3.2.3.2.2 Speed Decrease of Two Recirculation Pumps 15.3-6
15.3.2.3.3 Results 15.3-6
15.3.2.3.3.1 Speed Decrease of One Recirculation Pump 15.3-6
15.3.2.3.3.2 Speed Decrease of Two Recirculation Pumps 15.3-6
15.3.2.3.4 Consideration of Uncertainties 15.3-6
15.3.2.4 Barrier Performance 15.3-6
15.3.2.4.1 Speed Decrease of One Recirculation Pump 15.3-6
15.3.2.4.2 Speed Decrease of Two Recirculation Pumps 15.3-7
15.3.2.5 Radiological Consequences 15.3-7
15.3.3 RECIRCULATION PUMP SEIZURE 15.3-7
15.3.3.1 Identification of Causes and Frequency Classification 15.3-7
15.3.3.2 Sequence of Events and Systems Operation 15.3-7
15.3.3.2.1 Sequence of Events 15.3-7
15.3.3.2.2 Systems Operation 15.3-8
15.3.3.2.3 The Effect of Single Failures and Operator Errors 15.3-8
15.3.3.3 Core and System Performance 15.3-8
15.3.3.3.1 Mathematical Model 15.3-8
15.3.3.3.2 Input Parameters and Initial Conditions 15.3-8
15.3.3.3.3 Results 15.3-9
15.3.3.3.3.1 Considerations of Uncertainties 15.3-9
15.3.3.4 Barrier Performance 15.3-9
15.3.3.5 Radiological Consequences 15.3-9
15.3.4 RECIRCULATION PUMP SHAFT BREAK 15.3-9
15.3.4.1 Identification of Causes and Frequency Classification 15.3-9
15.3.4.1.1 Identification of Causes 15.3-10
15.3.4.1.2 Frequency Classification 15.3-10
15.3.4.2 Sequence of Events and Systems Operation 15.3-10
15.3.4.2.1 Sequence of Events 15.3-10
15.3.4.2.2 Systems Operation 15.3-10
15.3.4.2.3 The Effect of Single Failures and Operator Errors 15.3-10

Chapter 15

ACCIDENT ANALYSES

TABLE OF CONTENTS (Continued)

Section Page

15.3.4.3 Core and System Performance 15.3-11
15.3.4.3.1 Qualitative Results 15.3-11
15.3.4.4 Barrier Performance 15.3-11
15.3.4.5 Radiological Consequences 15.3-11
15.3.5 REFERENCES 15.3-11

15.4 REACTIVITY AND POWER DISTRIBUTION ANOMALIES 15.4-1
15.4.1 ROD WITHDRAWAL ERROR - LOW POWER 15.4-1
15.4.1.1 Control Rod Removal Error During Refueling 15.4-1
15.4.1.1.1 Identification of Causes and Frequency Classification 15.4-1
15.4.1.1.2 Sequence of Events and Systems Operation 15.4-1
15.4.1.1.2.1 Initial Control Rod Removal 15.4-1
15.4.1.1.2.2 Fuel Insertion With Control Rod Removed 15.4-1
15.4.1.1.2.3 Second Control Rod Removal 15.4-1
15.4.1.1.2.4 Control Rod Removal Without Fuel Removal 15.4-1
15.4.1.1.2.5 Effect of Single Failure and Operator Errors 15.4-2
15.4.1.1.3 Core and System Performances 15.4-2
15.4.1.1.4 Barrier Performance 15.4-2
15.4.1.1.5 Radiological Consequences 15.4-2
15.4.1.2 Continuous Rod Withdrawal During Reactor Startup 15.4-2
15.4.1.2.1 Identification of Causes and Frequency Classification 15.4-2
15.4.1.2.2 Sequence of Events and Systems Operation 15.4-3
15.4.1.2.2.1 Sequence of Events 15.4-3
15.4.1.2.2.2 Effects of Single Failure and Operator Errors 15.4-3
15.4.1.2.3 Core and System Performance 15.4-3
15.4.1.2.4 Barrier Performance 15.4-3
15.4.1.2.5 Radiological Consequences 15.4-3
15.4.2 ROD WITHDRAWAL ERROR - AT POWER 15.4-4
15.4.2.1 Identification of Causes and Frequency Classifications 15.4-4
15.4.2.1.1 Identification of Causes 15.4-4
15.4.2.1.2 Frequency Classification 15.4-4
15.4.2.2 Sequence of Events and Systems Operation 15.4-4
15.4.2.2.1 Sequence of Events 15.4-4
15.4.2.2.2 Systems Operation 15.4-4
15.4.2.2.3 Effect of Single Failure and Operator Errors 15.4-5

Chapter 15

ACCIDENT ANALYSES

TABLE OF CONTENTS (Continued)

Section — Page

15.4.2.3 Core and System Performance 15.4-5
15.4.2.3.1 Mathematical Model 15.4-5
15.4.2.3.2 Input Parameters and Initial Conditions 15.4-5
15.4.2.3.2.1 Rod Block Monitor System Operation 15.4-6
15.4.2.3.3 Results 15.4-6
15.4.2.3.4 Considerations of Uncertainties 15.4-6
15.4.2.4 Barrier Performance 15.4-6
15.4.2.5 Radiological Consequences 15.4-7
15.4.3 CONTROL ROD MALOPERATION (SYSTEM MALFUNCTION OR OPERATOR ERROR) 15.4-7
15.4.4 STARTUP OF IDLE RECIRCULATION PUMP 15.4-7
15.4.4.1 Identification of Causes and Frequency Classification 15.4-7
15.4.4.1.1 Identification of Causes 15.4-7
15.4.4.1.2 Frequency Classification 15.4-7
15.4.4.1.2.1 Normal Restart of Recirculation Pump at Power 15.4-7
15.4.4.1.2.2 Abnormal Startup of Idle Recirculation Pump 15.4-7
15.4.4.2 Sequence of Events and Systems Operation 15.4-7
15.4.4.2.1 Sequence of Events 15.4-7
15.4.4.2.2 Systems Operation 15.4-8
15.4.4.2.3 The Effect of Single Failures and Operator Errors 15.4-8
15.4.4.3 Core and System Performance 15.4-8
15.4.4.3.1 Mathematical Model 15.4-8
15.4.4.3.2 Input Parameters and Initial Conditions 15.4-8
15.4.4.3.3 Results 15.4-8
15.4.4.3.4 Consideration of Uncertainties 15.4-9
15.4.4.4 Barrier Performance 15.4-9
15.4.4.5 Radiological Consequences 15.4-9
15.4.5 RECIRCULATION FLOW CONTROL FAILURE WITH INCREASING FLOW 15.4-9
15.4.5.1 Identification of Causes and Frequency Classification 15.4-9
15.4.5.1.1 Identification of Causes 15.4-9
15.4.5.1.2 Frequency Classification 15.4-9
15.4.5.2 Sequence of Events and Systems Operation 15.4-10
15.4.5.2.1 The Effect of Single Failures and Operator Errors 15.4-10
15.4.5.3 Core and System Performance 15.4-10
15.4.5.3.1 Mathematical Model 15.4-10

Chapter 15

ACCIDENT ANALYSES

TABLE OF CONTENTS (Continued)

Section Page

15.4.5.3.2 Input Parameters and Initial Conditions 15.4-11
15.4.5.3.3 Results 15.4-11
15.4.5.3.4 Considerations of Uncertainties 15.4-11
15.4.5.4 Barrier Performance 15.4-11
15.4.5.5 Radiological Consequences 15.4-12
15.4.6 CHEMICAL AND VOLUME CONTROL SYSTEM MALFUNCTIONS .. 15.4-12
15.4.7 MISPLACED BUNDLE ACCIDENT 15.4-12
15.4.7.1 Identification of Causes and Frequency Classification 15.4-12
15.4.7.1.1 Identification of Causes 15.4-12
15.4.7.1.2 Frequency of Occurrence 15.4-13
15.4.7.2 Sequence of Events and Systems Operation 15.4-13
15.4.7.2.1 Effect of Single Failure and Operator Errors 15.4-13
15.4.7.3 Core and System Performance 15.4-13
15.4.7.3.1 Mathematical Model 15.4-13
15.4.7.3.2 Input Parameters and Initial Conditions 15.4-13
15.4.7.3.3 Results 15.4-13
15.4.7.3.4 Considerations of Uncertainties 15.4-14
15.4.7.4 Barrier Performance 15.4-14
15.4.7.5 Radiological Consequences 15.4-14
15.4.8 SPECTRUM OF ROD EJECTION ASSEMBLIES 15.4-14
15.4.9 CONTROL ROD DROP ACCIDENT 15.4-14
15.4.9.1 Identification of Causes and Frequency Classification 15.4-14
15.4.9.1.1 Identification of Causes 15.4-14
15.4.9.1.2 Frequency Classification 15.4-15
15.4.9.2 Sequence of Events and Systems Operation 15.4-15
15.4.9.2.1 Effect of Single Failures and Operator Errors 15.4-16
15.4.9.3 Core and System Performance 15.4-16
15.4.9.3.1 Mathematical Model 15.4-16
15.4.9.3.2 Input Parameters and Initial Conditions 15.4-16
15.4.9.3.3 Results 15.4-16
15.4.9.4 Barrier Performance 15.4-17
15.4.9.5 Radiological Consequences 15.4-17
15.4.9.5.1 Fission Product Release from Fuel 15.4-17
15.4.9.5.2 Fission Product Transport to the Environment 15.4-18
15.4.9.5.3 Results 15.4-18
15.4.10 REFERENCES 15.4-19

Chapter 15

ACCIDENT ANALYSES

TABLE OF CONTENTS (Continued)

Section — Page

15.5 INCREASE IN REACTOR COOLANT INVENTORY 15.5-1
15.5.1 INADVERTENT HIGH-PRESSURE CORE SPRAY STARTUP 15.5-1
15.5.1.1 Identification of Causes and Frequency Classification 15.5-1
15.5.1.1.1 Identification of Causes 15.5-1
15.5.1.1.2 Frequency Classification 15.5-1
15.5.1.2 Sequence of Events and Systems Operation 15.5-1
15.5.1.2.1 The Effect of Single Failures and Operator Errors 15.5-1
15.5.1.3 Core and System Performance 15.5-2
15.5.1.3.1 Mathematical Model 15.5-2
15.5.1.3.2 Input Parameter and Initial Conditions 15.5-2
15.5.1.3.3 Results 15.5-2
15.5.1.3.3.1 Consideration of Uncertainties 15.5-2
15.5.1.4 Barrier Performance 15.5-2
15.5.1.5 Radiological Consequences 15.5-2
15.5.2 CHEMICAL VOLUME CONTROL SYSTEM MALFUNCTION (OR OPERATOR ERROR) 15.5-2
15.5.3 BOILING WATER REACTOR TRANSIENTS WHICH INCREASE REACTOR COOLANT INVENTORY 15.5-2
15.5.4 REFERENCES 15.5-3

15.6 DECREASE IN REACTOR COOLANT INVENTORY 15.6-1
15.6.1 INADVERTENT SAFETY/RELIEF VALVE OPENING 15.6-1
15.6.2 INSTRUMENT LINE PIPE BREAK 15.6-1
15.6.2.1 Identification of Causes and Frequency Classification 15.6-1
15.6.2.1.1 Identification of Causes 15.6-1
15.6.2.1.2 Frequency Classification 15.6-1
15.6.2.2 Sequence of Events and Systems Operation 15.6-1
15.6.2.2.1 The Effect of Single Failures and Operator Errors 15.6-2
15.6.2.3 Core and System Performance 15.6-2
15.6.2.3.1 Qualitative Summary - Results 15.6-2
15.6.2.4 Barrier Performance 15.6-2
15.6.2.4.1 General 15.6-2
15.6.2.5 Radiological Consequences 15.6-2
15.6.2.5.1 Results 15.6-3
15.6.3 STEAM GENERATOR TUBE FAILURE 15.6-3

Chapter 15

ACCIDENT ANALYSES

TABLE OF CONTENTS (Continued)

Section — Page

15.6.4 STEAM SYSTEM PIPING BREAK OUTSIDE CONTAINMENT 15.6-3
15.6.4.1 Identification of Causes and Frequency Classification 15.6-3
15.6.4.1.1 Identification of Causes 15.6-3
15.6.4.1.2 Frequency Classification 15.6-3
15.6.4.2 Sequence of Events and Systems Operation 15.6-4
15.6.4.2.1 Sequence of Events 15.6-4
15.6.4.2.2 Systems Operation 15.6-4
15.6.4.2.3 The Effect of Single Failures and Operator Errors 15.6-4
15.6.4.3 Core and System Performance 15.6-4
15.6.4.3.1 Input Parameters and Initial Conditions 15.6-4
15.6.4.3.2 Results 15.6-5
15.6.4.3.3 Considerations of Uncertainties 15.6-5
15.6.4.4 Barrier Performance 15.6-5
15.6.4.5 Radiological Consequences 15.6-5
15.6.4.5.1 Results 15.6-6
15.6.5 LOSS-OF-COOLANT ACCIDENTS (RESULTING FROM SPECTRUM OF POSTULATED PIPING BREAKS WITHIN THE REACTOR COOLANT PRESSURE BOUNDARY) - INSIDE CONTAINMENT 15.6-6
15.6.5.1 Identification of Causes and Frequency Classification 15.6-7
15.6.5.1.1 Identification of Causes 15.6-7
15.6.5.1.2 Frequency Classification 15.6-7
15.6.5.2 Sequence of Events and Systems Operation 15.6-7
15.6.5.3 Core and System Performance 15.6-7
15.6.5.4 Radiological Consequences 15.6-7
15.6.5.4.1 Design Basis Analysis 15.6-7
15.6.5.4.1.1 Fission Product Release from Fuel 15.6-8
15.6.5.4.1.2 Fission Product Transport to the Environment 15.6-8
15.6.5.4.1.3 Suppression Pool pH Control 15.6-9
15.6.5.4.1.4 Results 15.6-9
15.6.6 FEEDWATER LINE BREAK - OUTSIDE CONTAINMENT 15.6-9
15.6.6.1 Identification of Causes and Frequency Classification 15.6-9
15.6.6.1.1 Identification of Causes 15.6-9
15.6.6.1.2 Frequency Classification 15.6-9
15.6.6.2 Sequence of Events and Systems Operation 15.6-9
15.6.6.2.1 Sequence of Events 15.6-9
15.6.6.2.2 Systems Operation 15.6-9

Chapter 15

ACCIDENT ANALYSES

TABLE OF CONTENTS (Continued)

Section Page

15.6.6.2.3 The Effect of Single Failures and Operator Errors 15.6-10
15.6.6.3 Core and System Performance 15.6-10
15.6.6.3.1 Qualitative Summary 15.6-10
15.6.6.3.2 Qualitative Results 15.6-10
15.6.6.3.3 Consideration of Uncertainties 15.6-10
15.6.6.4 Barrier Performance 15.6-10
15.6.6.5 Radiological Consequences 15.6-11
15.6.6.5.1 Fission Product Release 15.6-11
15.6.6.5.2 Fission Product Transport to the Environment 15.6-11
15.6.6.5.3 Results 15.6-12
15.6.7 REFERENCES 15.6-12

15.7 RADIOACTIVE RELEASE FROM SUBSYSTEMS AND COMPONENTS 15.7-1
15.7.1 RADIOACTIVE GAS WASTE SYSTEM LEAK OR FAILURE 15.7-1
15.7.2 LIQUID RADIOACTIVE SYSTEM FAILURE 15.7-1
15.7.3 POSTULATED RADIOACTIVE RELEASES DUE TO LIQUID RADWASTE TANK FAILURE 15.7-1
15.7.3.1 Identification of Causes and Frequency Classification 15.7-1
15.7.3.1.1 Identification of Causes 15.7-1
15.7.3.1.2 Frequency Classification 15.7-1
15.7.3.2 Sequence of Events and Systems Operation 15.7-1
15.7.3.2.1 Sequence of Events 15.7-1
15.7.3.2.2 Systems Operation 15.7-2
15.7.3.2.3 The Effects of Single Failures and Operator Errors 15.7-2
15.7.3.3 Core and System Performance 15.7-2
15.7.3.4 Barrier Performance 15.7-2
15.7.3.5 Radiological Consequences 15.7-3
15.7.4 FUEL HANDLING ACCIDENT 15.7-3
15.7.4.1 Identification of Causes and Frequency Classification 15.7-3
15.7.4.1.1 Identification of Causes 15.7-3
15.7.4.1.2 Frequency Classification 15.7-3
15.7.4.2 Sequence of Events and Systems Operation 15.7-4
15.7.4.2.1 The Effects of Single Failures and Operator Errors 15.7-4
15.7.4.3 Core and System Performance 15.7-4
15.7.4.3.1 Mathematical Model 15.7-4

Chapter 15

ACCIDENT ANALYSES

TABLE OF CONTENTS (Continued)

Section — Page

15.7.4.3.2 Input Parameters and Initial Conditions 15.7-5
15.7.4.3.3 Results 15.7-5
15.7.4.4 Barrier Performance 15.7-5
15.7.4.5 Radiological Consequences 15.7-6
15.7.4.5.1 Design Basis Analysis 15.7-6
15.7.4.5.1.1 Fission Product Release From Fuel 15.7-6
15.7.4.5.1.2 Fission Product Transport to the Environment 15.7-6
15.7.4.5.1.3 Results 15.7-6
15.7.5 SPENT FUEL CASK DROP ACCIDENT 15.7-6
15.7.6 REFERENCES 15.7-7

15.8 ANTICIPATED TRANSIENTS WITHOUT SCRAM 15.8-1
15.8.0 CAPABILITIES OF PRESENT DESIGN TO ACCOMMODATE ANTICIPATED TRANSIENTS WITHOUT SCRAM 15.8-1
15.8.1 INADVERTENT CONTROL ROD WITHDRAWAL 15.8-2a
15.8.2 LOSS OF FEEDWATER 15.8-2a
15.8.2.1 Identification of Causes and Frequency Classification 15.8-2a
15.8.2.1.1 Identification of Causes 15.8-2a
15.8.2.1.2 Frequency Classification 15.8-3
15.8.2.2 Sequence of Events and System Operation 15.8-3
15.8.2.2.1 Sequence of Events 15.8-3
15.8.2.2.1.1 Identification of Operator Actions 15.8-3
15.8.2.2.2 System Operation 15.8-3
15.8.2.2.3 The Effect of Single Failure and Operator Errors 15.8-3
15.8.2.3 Core and System Performance 15.8-4
15.8.2.3.1 Mathematical Model 15.8-4
15.8.2.3.2 Input Parameters and Initial Conditions 15.8-4
15.8.2.3.3 Results 15.8-4
15.8.2.3.4 Consideration of Uncertainties 15.8-4
15.8.2.4 Barrier Performance 15.8-5
15.8.2.5 Radiological Consequences 15.8-5
15.8.3 LOSS OF ALTERNATE CURRENT POWER 15.8-5
15.8.4 LOSS OF ELECTRICAL LOAD 15.8-5
15.8.5 LOSS OF CONDENSER VACUUM 15.8-5
15.8.6 TURBINE TRIP 15.8-5

Chapter 15

ACCIDENT ANALYSES

TABLE OF CONTENTS (Continued)

Section Page

15.8.7 CLOSURE OF MAIN STEAM LINE ISOLATION VALVES 15.8-6
15.8.7.1 Identification of Causes and Frequency Classification 15.8-6
15.8.7.1.1 Identification of Causes 15.8-6
15.8.7.1.2 Frequency Classification 15.8-6
15.8.7.2 Sequence of Events and System Operation 15.8-6
15.8.7.2.1 Sequence of Events 15.8-6
15.8.7.2.1.1 Identification of Operator Actions 15.8-6
15.8.7.2.2 System Operation 15.8-6
15.8.7.2.3 The Effect of Single Failures and Operator Errors 15.8-7
15.8.7.3 Core and System Performance 15.8-7
15.8.7.3.1 Mathematical Model 15.8-7
15.8.7.3.2 Input Parameters and Initial Conditions 15.8-7
15.8.7.3.3 Results 15.8-7
15.8.7.3.4 Consideration of Uncertainties 15.8-8
15.8.7.4 Barrier Performance 15.8-8
15.8.7.5 Radiological Consequences 15.8-8
15.8.8 INADVERTENT OPENING OF RELIEF VALVE 15.8-9
15.8.8.1 Identification of Causes and Frequency Classification 15.8-9
15.8.8.1.1 Identification of Causes 15.8-9
15.8.8.1.2 Frequency Classification 15.8-9
15.8.8.2 Sequence of Events and System Operation 15.8-9
15.8.8.2.1 Sequence of Events 15.8-9
15.8.8.2.1.1 Identification of Operator Actions 15.8-9
15.8.8.2.1.2 System Operation 15.8-9
15.8.8.2.2 The Effect of Single Failures and Operator Errors 15.8-9
15.8.8.3 Core and System Performance 15.8-10
15.8.8.3.1 Mathematical Model 15.8-10
15.8.8.3.2 Input Parameters and Initial Conditions 15.8-10
15.8.8.3.3 Results 15.8-10
15.8.8.3.4 Consideration of Uncertainties 15.8-11
15.8.8.4 Barrier Performance 15.8-11
15.8.8.5 Radiological Consequences 15.8-11
15.8.9 PRESSURE REGULATOR FAILURE - OPEN (PREGO) 15.8-11
15.8.9.1 Identification of Causes and Frequency Classification 15.8-11
15.8.9.1.1 Identification of Causes 15.8-11
15.8.9.1.2 Frequency Classification 15.8-11

Chapter 15

ACCIDENT ANALYSES

TABLE OF CONTENTS (Continued)

Section — Page

15.8.9.2 Sequence of Events and System Operation 15.8-11
15.8.9.2.1 Sequence of Events 15.8-11
15.8.9.2.1.1 Identification of Operator Actions 15.8-12
15.8.9.2.1.2 System Operation 15.8-12
15.8.9.2.3 The Effect of Single Failures and Operator Errors 15.8-12
15.8.9.3 Core and System Performance 15.8-12
15.8.9.3.1 Mathematical Model 15.8-12
15.8.9.3.2 Input Parameters and Initial Conditions 15.8-12
15.8.9.3.3 Results 15.8-13
15.8.9.3.4 Consideration of Uncertainties 15.8-13
15.8.9.4 Barrier Performance 15.8-13
15.8.9.5 Radiological Consequences 15.8-13
15.8.10 SINGLE REACTOR RECIRCULATION SYSTEM PUMP OPERATION 15.8-14
15.8.11 REFERENCES 15.8-15

Chapter 15

ACCIDENT ANALYSES

LIST OF TABLES

Number	Title	Page
15.0-1	Results Summary of Transient Events Applicable to Columbia Generating Station	15.0-17
15.0-1A	Summary of Transient Peak Value Results Single-Loop Operation	15.0-20
15.0-2	Input Parameters and Initial Conditions for Transients	15.0-21
15.0-2A	Input Parameters and Initial Conditions for Transients and Accidents for Single-Loop Operation	15.0-24
15.0-2B	Input Parameters and Initial Conditions for ARTS/MELLLA and GNF Reload Transient	15.0-26
15.0-3	Summary of Accidents	15.0-28
15.0-4	χ/Q (s/m^3) values for the EAB and LPZ	15.0-29
15.0-5	Control Room Atmospheric Dispersion Factors (sec/m^3)	15.0-30
15.1-1	Sequence of Events for Figure 15.1-1	15.1-17
15.1-1A	Sequence of Events for Figure 15.1-3	15.1-18
15.1-2	Sequence of Events for Figure 15.1-2	15.1-19
15.1-3	Sequence of Events for Inadvertent Safety/Relief Valve Opening	15.1-20
15.1-4	Sequence of Events for Inadvertent Residual Heat Removal Shutdown Cooling Operation	15.1-21
15.2-1	Sequence of Events for Figure 15.2-1	15.2-35
15.2-2	Sequence of Events for Figure 15.2-2.1	15.2-36
15.2-3	Sequence of Events for Figure 15.2-2.2	15.2-37
15.2-4	Sequence of Events for Figure 15.2-3	15.2-38

Chapter 15

ACCIDENT ANALYSES

LIST OF TABLES (Continued)

Number	Title	Page
15.2-5	Sequence of Events for Figure 15.2-4	15.2-39
15.2-6	Sequence of Events for Figure 15.2-5	15.2-40
15.2-7	Sequence of Events for Figure 15.2-6	15.2-41
15.2-8	Trip Signals Associated with Loss-of-Condenser Vacuum	15.2-42
15.2-9	Sequence of Events for Figure 15.2-7	15.2-43
15.2-10	Sequence of Events for Figure 15.2-8	15.2-44
15.2-11	Sequence of Events for Figure 15.2-9	15.2-45
15.2-12	Sequence of Events for Failure of Residual Heat Removal Shutdown Cooling	15.2-46
15.2-13	Evaluation of Failure of Residual Heat Removal Shutdown Cooling	15.2-47
15.3-1	Sequence of Events for Figure 15.3-1	15.3-13
15.3-2	Sequence of Events for Figure 15.3-2	15.3-14
15.3-3	Sequence of Events for Figure 15.3-3	15.3-15
15.3-4	Sequence of Events for Figure 15.3-4	15.3-16
15.3-5	Sequence of Events for Figure 15.3-5	15.3-17
15.3-6	Sequence of Events for Pump Seizure (for Single Loop Operation)	15.3-18
15.4-1	Sequence of Events - Rod Withdrawal Error in Power Range	15.4-21

Chapter 15

ACCIDENT ANALYSES

LIST OF TABLES (Continued)

Number	Title	Page
15.4-2	Sequence of Events for an Abnormal Startup of an Idle Recirculation Loop	15.4-22
15.4-3	Reactor Recirculation Pump Flow Increase Input Parameters and Initial Conditions	15.4-23
15.4-4	Control Rod Drop Accident Evaluation Parameters	15.4-24
15.4-5	Control Rod Drop Accident Activity Airborne in the Condenser (Curies)	15.4-26
15.4-6	Control Rod Drop Accident Activity Airborne to the Environment (Curies)	15.4-29
15.4-7	Control Rod Drop Accident Radiological Effects (rem)	15.4-32
15.5-1	Input Parameters and Initial Conditions HPCS Injection	15.5-5
15.6-1	Instrument Line Break Accident - Parameters Tabulated for Postulated Accident Analyses	15.6-13
15.6-2	Instrument Line Failure	15.6-15
15.6-3	Instrument Line Failure Radiological Effects	15.6-16
15.6-4	Sequence of Events for Steam Line Break Outside Containment	15.6-17
15.6-5	Steam Line Break Accident - Parameters Tabulated for Postulated Accident Analyses	15.6-18
15.6-6	Steam Line Break Accident Activity Release to Environment (Curies)	15.6-20
15.6-7	Steam Line Break Accident Radiological Effects of a Puff Release	15.6-21

Chapter 15

ACCIDENT ANALYSES

LIST OF TABLES (Continued)

Number	Title	Page
15.6-8	Loss-of-Coolant Accident - Parameters Tabulated for Postulated Accident Analysis	15.6-22
15.6-9	Loss-of-Coolant Accident Primary Containment Activity (Curies)	15.6-25
15.6-10	Loss-of-Coolant Accident Secondary Containment Activity (Curies) - 20 Minute Drawdown	15.6-26
15.6-11	Loss-of-Coolant Accident Activity Released to the Environment (Curies) - 20 Minute Drawdown	15.6-27
15.6-12	Loss-of-Coolant Accident (Design Basis Analysis) Radiological Effects	15.6-28
15.6-13	Sequence of Events for Feedwater Line Break Outside Containment	15.6-29
15.6-14	Feedwater Line Break Accident - Parameters Tabulated for Postulated Accident Analysis	15.6-30
15.6-15	Feedwater Line Break Accident Activity Release to Environment (Curies)	15.6-32
15.6-16	Feedwater Line Break Accident Biological Effects of a Puff Release	15.6-33
15.7-1	Liquid Radwaste Tanks Failure - Parameters and Concentrations	15.7-9
15.7-2	Fuel Handling Accident Parameters Tabulated for Postulated Accident Analysis	15.7-10
15.7-3	Fuel Handling Accident Activity Airborne in Secondary Containment (Curies)	15.7-12
15.7-4	Fuel Handling Accident Activity Released to the Environment (Curies)	15.7-13

Chapter 15

ACCIDENT ANALYSES

LIST OF TABLES (Continued)

Number	Title	Page
15.7-5	Fuel Handling Accident (Design Basis Analysis) Radiological Effects	15.7-14
15.8-1	Anticipated Transients Without Scram Analysis Initial Conditions	15.8-17
15.8-1A	Anticipated Transients Without Scram Analysis for MELLLA Initial Conditions and Equipment Performance Characteristics	15.8-17a
15.8-2	Anticipated Transients Without Scram Analysis Equipment Performance Characteristics	15.8-18
15.8-3	Summary of Anticipated Transients Without Scram Results	15.8-19
15.8-4	Sequence of Events for Loss of Feedwater	15.8-20
15.8-5	Sequence of Events for Main Steam Line Isolation Valve Closure (Long Term Transient)	15.8-21
15.8-6	Deleted	15.8-22
15.8-7	Sequence of Events for Inadvertent Open Relief Valve	15.8-23
15.8-8	Sequence of Events for Pressure Regulator Failure Open (Long Term Transient)	15.8-24

Chapter 15

ACCIDENT ANALYSES

LIST OF FIGURES

Number	Title
15.0-1	Scram Position and Reactivity Characteristics
15.0-2	Illustration of Single Recirculation Loop Operation Flows
15.1-1	Feedwater Controller Failure, Maximum Demand
15.1-2	Pressure Regulator Failure - Open at 104.5% Uprated Power, 100% Flow (Sheets 1 through 11)
15.1-3	Feedwater Controller Failure, Maximum Demand, EOC RPT OOS, Single Loop Operation and 73.8% Uprated Power, 57% Flow (Sheets 1 through 4)
15.2-1	Pressure Regulatory Failure - Down Scale Failure at 104.1% Uprated Power, 106% Flow
15.2-2.1	Generator Load Rejection with Bypass On - Original Rated Power (Sheet 1)
15.2-2.2	Generator Load Rejection with BP Failure
15.2-3	Turbine Trip, Trip Scram, Bypass, and RPT - On
15.2-4	Turbine Trip with Bypass Failure
15.2-5	Main Steam Line Isolation Valve Closure at 104.5% Uprated Power, 100% Rated Flow
15.2-6	Loss of Condenser Vacuum at 102.4% Uprated Power, 100% Rated Flow
15.2-7	Loss of Auxiliary Power Transformers – 104.5% Uprated Power, 100% Rated Flow
15.2-8	Loss of All Grid Connections – 102.4% Uprated Power, 100% Rated Flow
15.2-9	Loss of All Feedwater Flow – 104.5% Uprated Power, 100% Rated Flow

Chapter 15

ACCIDENT ANALYSES

LIST OF FIGURES (Continued)

Number	Title
15.2-10	Automatic Depressurization System/Residual Heat Removal Cooling Loops (Sheets 1 and 2)
15.2-11	Summary of Paths Available to Achieve Cold Shutdown
15.2-12	Activity C1 Alternate Shutdown Cooling Path Utilizing Residual Heat Removal Loop B
15.2-13	Residual Heat Removal Loop C
15.2-14	Residual Heat Removal Loop A (B) (Suppression Pool Cooling/Rated Pump Flow Test Mode)
15.2-15	Activity C2 Alternate Shutdown Cooling Path Utilizing Residual Heat Removal Loop A
15.2-16	Vessel Temperature and Pressure Versus Time (Activity C1.b.1 or C2)
15.2-17	Vessel Temperature and Pressure Versus Time (Activity C1.b.2)
15.2-18	Suppression Pool Temperature Versus Time (with 87°F Service Water Temperature) (Activity C1.b.1 or C.2)
15.2-19	Suppression Pool Temperature Versus Time (with 87°F Service Water Temperature) (Activity C1.b.2)
15.3-1	One Recirculation Pump Trip at 104.5% Uprated Power, 100% Flow (Sheets 1 through 5)
15.3-2	Two Recirculation Pump Trip at 104.5% Uprated Power, 100% Flow (Sheets 1 through 5)
15.3-3	Recirculation Flow Control Failure - Decreasing Flow in One Loop at 104.5% Uprated Power, 100% Flow (Sheets 1 through 5)

Chapter 15

ACCIDENT ANALYSES

LIST OF FIGURES (Continued)

Number	Title
15.3-4	Recirculation Flow Control Failure - Decreasing Flow in Two Loops, (5%/Sec Ramp) at 104.5% Uprated Power, 100% Flow (Sheets 1 through 5)
15.3-5	Recirculation Pump Seizure at 104.5% Uprated Power, 100% Flow (Sheets 1 through 5)
15.3-6	SLO Recirculation Pump Seizure Results
15.4-1	Abnormal Startup of an Idle Recirculation Loop at 56.95% Uprated Power, 34.1% Flow (Sheets 1 through 5)
15.4-2	Leakage Path Model for Rod Drop Accident (Original Rated Power)
15.5-1	Inadvertent Start of High-Pressure Core Spray Pump at 100.34% Uprated Power, 88% Flow
15.6-1	Leakage Path for Instrument Line Break
15.6-2	Steam Flow Schematic for Steam Break Outside Containment
15.6-3	Leakage Path for LOCA
15.6-4	Leakage Path for Feedwater Line Break Outside Containment
15.7-1	Leakage Path for Fuel Handling Accident
15.8-1	Loss of Feedwater Event (Sheets 1 through 5)
15.8-2	Main Steam Isolation Valve Closure Event (Sheets 1 through 5)
15.8-3	Main Steam Isolation Valve Closure Event with Four SRVs Out-of-Service (Sheets 1 through 5)
15.8-4	Inadvertent Opening of Relief Valve Event (Sheets 1 through 5)
15.8-5	Pressure Regulator Failure - Open Event (Sheets 1 through 5)

Chapter 15

ACCIDENT ANALYSES

15.0 GENERAL

This chapter discusses the effects of anticipated process disturbances and postulated component failures, their consequences, and the capabilities built into the plant to control or accommodate such failures and events. The analyses have been reviewed and revised, as needed, for the:

- Reactor power uprate
- Installation of the adjustable speed drive for the reactor recirculation pumps
- Implementation of an alternative source term
- APRM/RBM Technical Specification (ARTS) improvement program
- Maximum Extended Load Line Limit Analysis (MELLLA)
- Cycle specific changes

These changes to the plant licensing and design basis and their impact are discussed in this chapter.

The scope of the situations analyzed includes anticipated (expected) operational occurrences, off-design abnormal (unexpected) transients that induce system operating condition disturbances, postulated accidents of low probability, and hypothetical events of extremely low probability. For each reload, the events are evaluated by the fuel vendor(s). The events identified as limiting during the evaluation are analyzed and the sections are revised.

The plant was originally licensed at 3323 MWt. In 1995, an amendment to the plant Operating License authorized an increase in power to 3486 MWt. The power uprate analysis was performed in accordance with the NRC-approved General Electric Company (GE) generic power uprate program for boiling water reactors (BWRs).

A Measurement Uncertainty Recapture (MUR) uprate design change was performed per EC 14942 in 2016 to increase rated thermal power to 3544 MWt. The power uprate analysis was performed in accordance with the NRC-10CFR50, Appendix K approved methodology.

The postulated events in this chapter have been analyzed for power uprate conditions. The only exceptions to using uprated power are some non-limiting single loop operation (SLO) transients that were not reanalyzed as part of the GE power uprate transient analysis. Their text and figures are clearly marked with ORIGINAL POWER designation. Limiting events in terms of setting the fuel operating limits (e.g., Loss of Feedwater Heating, Generator Load Rejection Without Bypass) are reanalyzed on a cycle specific basis and therefore, may include fuel vendor results and references.

The events in this chapter have been analyzed for application of the adjustable speed drives (ASD) in place of the former reactor recirculation control system that used flow control valves

(FCV). The uprated power for Columbia Generating Station is 3544 MWt which is 6.65% higher than the original licensed power of 3323 MWt. All transient initial conditions are specified in Table 15.0-2, 15.0-2A, 15.0-2B or the individual transient event description sections. Several performance improvement packages have been included in the analysis:

1. Final Feedwater Temperature Reduction (FFWTR) and Feedwater Heaters Out-Of-Service (FWHOOS) - Analyses were performed at a reduced feedwater temperature at rated thermal power for operations at end-of-cycle and during the cycle for limiting transients.

2. Increased Core Flow (ICF) – Increased core flow allows for operation at 106% of the rated core flow. The limiting transients were performed for the end-of-cycle with control rods fully withdrawn. This envelopes the operation at increased core flow condition throughout the cycle.

3a. Extended Load Line Limit Analysis (ELLLA) - The consequences of the transients were evaluated to determine if operating limit adjustments are necessary for operation in the extended operating domain and compared with the evaluation at rated thermal power and increased core flow region. This comparison ensures bounding of the results at the extended operating domain.

3b. Maximum Extended Load Line Limit Analysis (MELLLA) – The consequences of the transients were evaluated to determine if operating limit adjustments are necessary for operation in the maximum extended operating domain and compared with the evaluation at rated thermal power and increased core flow region. This comparison ensures bounding of the results at the maximum extended operating domain.

4. Single Loop Operation (SLO) - Limiting transients were re-analyzed for operation at SLO. Using adjustable speed drives (ASD), GE determined the maximum active loop's recirculation flow at 105% of rated pump speed with resultant analyzed power and core flow conditions of 73.8% UP and 57% of rated core flow for SLO. Prior to power uprate, a comprehensive SLO analysis was performed. For non-limiting events, this analysis has been retained for completeness and historical purposes. These analyses are clearly marked with ORIGINAL POWER designation.

5. End-of-Cycle RPT Out-of-Service (RPT OOS) - The recirculation pump trip (RPT) mitigates several transients that are more severe at end-of-cycle. The limiting transients were re-analyzed with RPT OOS at various power/flow conditions.

6. Turbine Bypass Out-of-Service - Limiting transient events have been analyzed with turbine bypass valves out-of-service at limiting power and flow conditions.

7. Average Power Range Monitor, Rod Block Monitor Technical Specifications (ARTS) – The ARTS improvement program improves fuel thermal limits protection at off-rated conditions with a more rigorous application of power and flow dependent

Minimum Critical Power Ratio (MCPR) and Linear Heat Generation Rate (LHGR) limits. The ARTS improvement program eliminates the Technical Specification requirement for total peaking factor setdown at off-rated conditions. The ARTS program includes modification of the Rod Block Monitor (RBM), from flow-based to power-based setpoints, to improve the rod movement flexibility at less than rated power conditions, and establish an optimized configuration that improves the system response with respect to bundle power.

Additional updates address the implementation of the use of alternative source terms (AST) as described in the Regulatory Guide 1.183, July 2000, "Alternative Radiological Source Terms for Evaluating Design Basis Accidents at Nuclear Power Reactors." This methodology is based on the advances that have been made in understanding the timing, magnitude, and the chemical form of fission product releases from severe nuclear power plant accidents. The accidents that were reanalyzed by Energy Northwest with the AST:

- Loss of coolant accident (LOCA)
- Fuel handling accident (FHA)
- Control rod drop accident (CRDA)
- Main steam line break, outside containment, accident (MSLB)

The radiological consequences of these accidents were determined based on AST approved for use under 10 CFR 50.67. In accordance with the guidance provided in Regulatory Guide 1.183, the licensing and design basis are revised to reflect the application of full scope AST methodology (with the exception that the TID-14844 will continue to be used as the basis for equipment qualification (EQ) and radiation zone maps/shielding calculations). The accidents analyzed as part of the implementation of AST are subject to the limits specified in 10 CFR 50.67 and guidelines of Regulatory Guide 1.183.

15.0.1 ANALYTICAL OBJECTIVE

The spectrum of postulated initiating events is divided into categories based on the type of disturbance and the expected frequency of the initiating occurrence. The limiting events in each combination of category and frequency are quantitatively analyzed.

15.0.2 ANALYTICAL CATEGORIES

Transient and accident events contained in this report are provided in individual categories as specified by Regulatory Guide 1.70, Revision 2. The results of the events are summarized in Table 15.0-1. Events evaluated are assigned to one of the following applicable categories:

a. Decrease in reactor coolant temperature:

   Reactor vessel water (moderator) temperature reduction results in an increase in core reactivity. This could lead to fuel-cladding damage.

b. Increase in reactor pressure:

Nuclear system pressure increases threaten to rupture the reactor coolant pressure boundary (RCPB). Increasing pressure also collapses the voids in the core-moderator, thereby increasing core reactivity and power level that could threaten fuel cladding due to overheating.

c. Decrease in reactor coolant system flow rate:

A reduction in the core coolant flow rate could overheat the cladding as the coolant becomes unable to adequately remove the heat generated by the fuel.

d. Reactivity and power distribution anomalies:

Transient events included in this category are those that could cause rapid increases in power due to increased core flow disturbance events. Increased core flow reduces the void content of the moderator increasing core reactivity and power level.

e. Increase in reactor coolant inventory:

Increasing coolant inventory could result in excessive moisture carryover to components such as the main turbine, feedwater turbines, etc.

f. Decrease in reactor coolant inventory:

Reductions in coolant inventory could threaten the fuel as the coolant becomes less able to remove heat generated in the core.

g. Radioactive release from subsystems and components:

Loss of integrity of a radioactive containment component is postulated.

h. Anticipated transients without scram:

To determine the capability of plant design to accommodate an extremely low probability event, a multi-system maloperation situation is postulated.

15.0.2.1 Single Loop Operation (SLO)

Operation with one recirculation loop results in a maximum power output that is 20% to 30% below that which is attainable for two-pump operation. Therefore, the consequences of abnormal operation transients from one-loop operation will be considerably less severe than those analyzed from a two-loop operational mode because of the associated reduction in operation power level.

For pressurization, flow decrease, and cold water increase transients, results presented bound both the thermal and overpressure consequences of one-loop operation. The consequences of flow decrease transients are also bounded by the full power analysis. A single pump trip from one-loop operation is less severe than a two-pump trip from full power because of the reduced initial power level.

Cold water increase transients can result from either recirculation flow controller failure or introduction of colder water into the reactor vessel by events such as loss of feedwater heater. For the former, the flow-dependent MCPR values are derived assuming both recirculation loop controllers fail. This condition produces the maximum possible power increase and, hence, maximum ΔMCPR for transients initiated from less than rated power and flow. When operating with only one recirculation loop, the flow and power increase associated with this failure with only one recirculation loop will be less than that associated with both loops; therefore, the MCPR values derived with the two-pump assumption are conservative for SLO. The latter event, loss of feedwater heating, is generally the most severe cold water increase event with respect to increase in core power. This event is caused by positive reactivity insertion from core inlet subcooling and it is relatively insensitive to initial power level. A generic statistical loss of feedwater heater analysis using different initial power levels and other core design parameters concluded one-pump operation with lower initial power level is conservatively bounded by the full power two-pump analysis. Inadvertent restart of the idle recirculation pump has been analyzed and is applicable for SLO.

From the above discussions, the transient consequence from SLO is bounded by previously submitted full power analyses. The maximum power level that can be attained with one-loop operation is only restricted by the MCPR and overpressure limits established from a full-power analysis.

The following most limiting transients of coldwater increase, pressurization and flow decrease events are analyzed for SLO and the results are shown in Table 15.0-1A:

a. Feedwater flow controller failure (maximum demand),
b. Generator load rejection with bypass failure, and
c. One pump seizure accident.

15.0.3 EVENT EVALUATION

15.0.3.1 Identification of Causes and Frequency Classification

Situations and causes that lead to the initiating event analyzed are described within the analytical categories. The frequency of occurrence of each event is summarized based on operating plant history for the transient event. Events for which inconclusive data exist are discussed separately within each event section.

Each initiating event within the major groups is assigned to one of the following frequency groups:

a. Incidents of moderate frequency - these are incidents that may occur during a calendar year to once per lifetime. This event is referred to as an "anticipated (expected) operational transient."

b. Infrequent incidents - these are incidents that may occur during the life of the particular plant. This event is referred to as an "abnormal (unexpected) operational transient."

c. Limiting faults - these are occurrences that are not expected to occur but are postulated because their consequences may result in the release of significant amounts of radioactive material. This event is referred to as a "design basis (postulated) accident."

15.0.3.1.1 Unacceptable Results for Incidents of Moderate Frequency [Anticipated (Expected) Operational Transients]

The following are unacceptable safety results for incidents of moderate frequency:

a. Release of radioactive material to the environs that exceeds the limits of 10 CFR 20,

b. Reactor operation induced fuel cladding failure,

c. Nuclear system stresses in excess of that allowed for the transient classification by applicable industry codes, and

d. Containment stresses in excess of that allowed for the transient classification by applicable industry codes.

15.0.3.1.2 Unacceptable Results for Infrequent Incidents [Abnormal (Unexpected) Operational Transients]

The following are unacceptable safety results for infrequent incidents:

a. Release of radioactivity that results in dose consequences that exceed a small fraction of 10 CFR 50.67 values,

b. Fuel damage that would preclude resumption of normal operation after a normal restart,

c. Generation of a condition that results in consequential loss of function of the reactor coolant system, and

d. Generation of a condition that results in a consequential loss of function of a necessary containment barrier.

15.0.3.1.3 Unacceptable Results for Limiting Faults [Design-Basis (Postulated) Accidents]

The following are unacceptable safety results for limiting faults:

a. Radioactive material release that results in dose consequences that exceed the requirements of 10 CFR 50.67,

b. Failure of fuel cladding that would cause changes in core geometry such that core cooling would be inhibited,

c. Nuclear system stresses in excess of those allowed for the accident classification by applicable industry codes,

d. Containment stresses in excess of those allowed for the accident classification by applicable industry codes when containment is required, and

e. Radiation exposure to plant operations personnel in the main control room in excess of 5 rem total effective dose equivalent (TEDE) for the duration of the accident.

15.0.3.2 Sequence of Events and Systems Operation

Each transient or accident is discussed and evaluated in terms of

a. A step-by-step sequence of events from initiation to final stabilized condition (e.g., termination of the accident),

b. The extent to which normally operating plant instrumentation and controls are assumed to function,

c. The extent to which plant and reactor protection systems are required to function,

d. The credit taken for the functioning of normally operating plant systems,

e. The operation of engineered safety systems that is required, and

f. The effect of a single failure or an operator error on the event.

The transient or accident discussion is specific to the event in that it is limited to the events and system operations related to the reactor core performance and postulated damage. In general, the step-by-step description ends when the analysis has demonstrated that the core performance results are within established limits. The stabilized condition does not imply that all actions to stabilize plant parameters or to recover from the transient or accident have been completed by plant personnel. In the stabilized condition, either the core has demonstrated compliance with requirements or the postulated or deterministic damage is complete. At this point, the transient or accident is terminated. After termination of the event, the operator actions or system operations are not event specific. The required actions and expected system operations, needed to establish cold shutdown or to initiate recovery actions, are symptom based and described in

procedures. The events associated with a radiological release and radiological consequences of the transient or accident are also discussed.

15.0.3.2.1 Single Failures or Operator Errors

15.0.3.2.1.1 General. The events considered in this section were evaluated and are provided in this chapter in accordance with Regulatory 1.70, Revision 2.

15.0.3.2.1.2 Initiating Event Analysis.

a. The undesired opening or closing of any single valve (a check valve is not assumed to close against normal flow),

b. The undesired starting or stopping of any single component,

c. The malfunction or maloperation of any single control device,

d. Any single electrical component failure, or

e. Any single operator error.

Operator error is defined as an active deviation from written operating procedures or nuclear plant standard operating practices. The set of actions is limited as follows:

a. Those actions that could be performed by one person,

b. Those actions that would have constituted a correct procedure had the initial decision been correct, and

c. Those actions that are subsequent to the initial operator error and have an effect on the designed operation of the plant, but are not necessarily directly related to the operator error.

Examples of single operator errors are as follows:

a. An increase in power above the established flow control power limits by control rod withdrawal in the specified sequences,

b. The selection and complete withdrawal of a single control rod out of sequence,

c. An incorrect calibration of an average power range monitor (APRM), and

d. Manual isolation of the main steam lines as a result of operator misinterpretation of an alarm or indication.

15.0.3.2.1.3 Single Active Component Failure or Single Operator Error Analysis.

a. The undesired action or maloperation of a single active component, or

b. Any single operator error where operator errors are defined as in Section 15.0.3.2.1.2.

15.0.3.3 Core and System Performance

Fuel thermal and hydraulic design are described in Section 4.4.

The fuel cladding integrity safety limit is set so that no fuel damage is calculated to occur if the limit is not violated. Exceeding unacceptable results criteria for fuel cladding integrity for anticipated operational transients is avoided by meeting the following criteria provided in the NRC Standard Review Plan (NUREG-0800) Section 4.4:

a. The expected number of fuel rods in boiling transition should not exceed 0.1% of the fuel rods in the core. This criterion is met by ensuring that the MCPR for any anticipated operational transient is calculated to be not less than the $MCPR_{99.9\%}$ values given in the cycle-specific Core Operating Limits Report (COLR).

b. No fuel centerline melting nor cladding strain in excess of 1% will occur. This criterion is met by compliance with the operating limits for LHGR given in the cycle-specific COLR.

The operating limit for MCPR is developed as follows:

The MCPR calculated during the transient is compared to the $MCPR_{99.9\%}$. The $MCPR_{99.9\%}$ is established using the critical power evaluation methods and includes consideration of the operating domain and manufacturing uncertainties and a conservative core power distribution as inputs. The operating limit MCPR is established such that the transient ΔCPR for the dynamic anticipated operational occurrences and quasi steady-state anticipated operational occurrences are included in the evaluation. Thus, the operating limit MCPR is specified to maintain an adequate margin to boiling transition.

The MCPR operating limit is the maximum of (a) the applicable exposure dependent, full power and full flow MCPR limit, (b) the applicable exposure and power dependent MCPR limit, and (c) the flow dependent MCPR limit as specified in the cycle-specific COLR. This stipulation ensures that the $MCPR_{99.9\%}$ will not be violated throughout the CGS

operating regime. Full power MCPR limits are specified to define operating limits at rated power and a range of flow conditions that support extended load line operation. Power dependent MCPR limits are specified to define operating limits at other than rated power conditions. A flow dependent MCPR limit is specified to define operating limits at other than rated flow conditions.

With implementation of ARTS, the APRM total peaking factor setdown requirement is eliminated and power-dependent LHGR limits are substituted to ensure adherence to the fuel thermal mechanical design bases. Flow dependent LHGR limits are added to ensure adherence to all fuel thermal mechanical design bases during recirculation flow increase events.

ELLLA operation extends the power and flow operating regime for CGS above the rated rod line for SLO and two-loop recirculation pump operation (TLO). MELLLA further extends the power and flow operating regime but only for TLO. The COLR defines the ELLLA boundary for SLO and MELLLA boundary for TLO. The cycle specific Supplemental Reload Licensing Report (Reference 15.0-1) documents the reload analyses.

The CGS cycle-specific COLR provides the average planar linear heat generation rate (APLHGR) limits, the MCPR limits, and the linear heat generation rate (LHGR) limits as required by the Technical Specifications.

15.0.3.3.1 Mathematical Model

Unless otherwise stated in the Mathematical Model description for the event being discussed, the following mathematical model was used to perform the Chapter 15 transient analyses.

Transients are analyzed using the transient analysis models described in Reference 15.0-5. The three-dimensional transient analysis model TRACG was used to analyze transients involving significant reactor pressurization (i.e., limiting events). The point-kinetics transient analysis model REDY and the one-dimensional transient analysis model ODYN were used for transients not involving significant reactor pressurization (i.e., non-limiting events). The transient analysis model determines the transient pressure, power, heat flux, and average core flow which are required as input to both the hot channel analysis and to the transient critical power methodology. The TRACG transient analysis model also calculates the transient peak reactor vessel pressure to demonstrate conformance to the reactor pressure vessel safety limit, which is based on the reactor pressure vessel design pressure.

TRACG is a best-estimate code for analysis of BWR transients (Reference 15.0-5). It is based on a multi-dimensional, two-fluid model for the reactor thermal-hydraulics, and a three-dimensional neutron kinetics model for the reactor core. TRACG has a modular structure and flexible geometry capability. It contains a set of basic thermal-hydraulic components, such as vessel, channel, pipe, and tee components which are used as the building blocks to construct the system simulation. In addition to the basic thermal-hydraulic component models, TRACG contains a set of component models for the recirculation pumps, jet pumps, fuel channels,

steam separators, and dryers. TRACG also contains a control system model capable of simulating major BWR control systems.

The input data to the transient analysis model come from two sources: (1) the plant model or base deck, and (2) the BWR three-dimensional simulator PANACEA. The plant model provides the necessary input data for the simulation of the plant, including the plant and control systems performance characteristics. The BWR three-dimensional simulator supplies the core state, the neutron kinetics cross sections, and other data necessary to characterize the reactor core.

The TRACG analysis process begins by performing channel grouping and selecting limiting (hot) channels from the PANACEA wrapup file. After updating the TRACG Basedeck with any cycle specific OPL-3 changes, a TRACG Steady-State Initialization case, restarting from the PANACEA wrapup, is then run to establish initial conditions for the subsequent transient case. The Steady-State Initialization includes key parameters such as core power, core flow, vessel steam flow, core inlet subcooling, reactor dome pressure, vessel narrow range water level, steamline pressure drop, and turbine control valve initial position. These TRACG calculated steady state parameters are then compared with the corresponding PANACEA heat balance value or the cycle specific OPL-3 form to confirm that the steady state results are within methodology defined acceptance criteria. A TRACG Null Transient case is then run to establish the TRACG flux convergence criterion. Finally, the TRACG transient cases are run to calculate the limiting (hot) channel ΔCPR/ICPR, pressure margins, and Limiting (hot) channel power and nodal integrated powers.

The GESAM $MCPR_{99.9\%}$ calculational process, which includes the GEXL correlation, is then used to calculate the OLMCPR, based on plant specific transient bias and uncertainty inputs, the cycle specific $MCPR_{99.9\%}$, and the TRACG calculated ΔCPR/ICPR. The limiting hot channel power and nodal integrated powers are then normalized and used for input to perform the plant/cycle/event specific fuel rod thermal/mechanical evaluation, which is a separate calculation.

The above mathematical models describe the models used in the introduction of GNF2 fuel. Cycle specific analyses are performed using vendor specific models for the vendor supplying the reload fuel for the current cycle as described elsewhere in this chapter.

15.0.3.3.2 Input Parameters and Initial Conditions for Analyzed Events

This section discusses the important input parameters used in the analysis for the event discussed. In some cases, the discussion references Table 15.0-2 (or 2A or 2B).

15.0.3.3.3 Consideration of Uncertainties

Except for total core flow and TIP reading, the uncertainties used in the statistical analysis to determine the $MCPR_{99.9\%}$ are not dependent on whether coolant flow is provided by one or two recirculation pumps. Uncertainties used in the two-loop operation analysis are documented in

the FSAR. A 6% core flow measurement uncertainty has been established for single loop operation (compared to 2.5% for two-loop operation). This value conservatively reflects the one standard deviation (one sigma) accuracy of the core flow measurement system documented in Reference 15.0-2. In SLO, measurement and prediction uncertainties for radial power distribution and axial power distribution also increase. In the current methodology, axial power uncertainty is not an important parameter. The net effect of these revised uncertainties is an incremental increase in the required $MCPR_{99.9\%}$. The $MCPR_{99.9\%}$ for SLO is given in the cycle specific COLR.

15.0.3.3.3.1 Core Flow Uncertainty Analysis

The uncertainty analysis procedure used to establish the core flow uncertainty for one-pump operation is essentially the same as for two-pump operation, with some exceptions. The core flow uncertainty analysis is described in Reference 15.0-2. The analysis of one-pump core flow uncertainty is summarized below.

For SLO, the total core flow can be expressed as follows (see Figure 15.0-2):

$$W_C = W_A - W_I$$

where:

W_C = total core flow

W_A = active loop flow, and

W_I = inactive loop (true) flow.

By applying the "propagation of errors" method to the above equation, the variance of the total flow uncertainty can be approximated by:

$$\sigma^2_{W_C} = \sigma^2_{W_{sys}} + \left[\frac{1}{1-a}\right]^2 \left(\sigma^2_{W_{A_{rand}}}\right) + \left[\frac{a}{1-a}\right]^2 \left(\sigma^2_{W_{I_{rand}}} + \sigma^2_C\right)$$

where:

σ_{W_C} = uncertainty of total core flow;

$\sigma_{W_{sys}}$ = uncertainty systematic to both loops;

$\sigma_{W_{A_{rand}}}$ = random uncertainty of active loop only;

$\sigma_{W_{I_{rand}}}$ = random uncertainty of inactive loop only;

σ_C = uncertainty of "C" coefficient; and

a = ratio of inactive loop flow (WI) to active loop flow (WA).

From an uncertainty analysis, the conservative, bounding values of

$$\sigma_{W_{sys}}, \sigma_{W_{A_{rand}}}, \sigma_{W_{I_{rand}}}, \text{ and } \sigma_C$$

are 1.6%, 2.6%, 3.5% and 2.8% respectively. Based on the above uncertainties and a bounding value of 0.36* for "a", the variance of the total flow uncertainty is approximately:

$$\sigma^2_{W_C} = (1.6)^2 + \left[\frac{1}{1-0.36}\right]^2 (2.6)^2 + \left[\frac{0.36}{1-0.36}\right]^2 \left((3.5)^2 + (2.8)^2\right) = (5.0\%)^2$$

When the effect of 4.1% core bypass flow split uncertainty at 12% (bounding case) bypass flow fraction is added to the above total core flow uncertainty, the active coolant flow uncertainty is:

$$\sigma^2_{\text{active coolant}} = (5.0\%)^2 + \left[\frac{0.12}{1-0.12}\right]^2 (4.1\%)^2 = (5.1\%)^2$$

which is less than the 6% core flow uncertainty assumed in the statistical analysis.

In summary, core flow during one-pump operation is measured in a conservative way and its uncertainty has been conservatively evaluated.

15.0.3.3.4 Results

This section discusses the results, in terms of core and system performance, of the event analyzed. The COLR provides operating limits that are the results of analytical evaluations that impact core operating parameters for the current cycle. In addition, critical parameters for the complete set of transients analyzed are shown in Table 15.0-1. From the data in Table 15.0-1, an evaluation of the limiting event for that particular category and parameter can

* This flow split ratio varies from about 0.13 to 0.36. The 0.36 value is a conservative bounding value. The analytical expected value of the flow split ratio for CGS is ~0.23.

be made. The limiting events are reanalyzed for the current operating cycle. Table 15.0-3 provides a summary of accidents that may have radiological consequences.

15.0.3.4 Barrier Performance

This section addresses the performance of the RCPB and the containment system during transients and accidents.

During transients that occur with no release of coolant to the containment, only RCPB performance is considered. If release to the containment occurs as in the case of limiting faults, then challenges to the containment are evaluated as well.

Piping systems within the secondary containment structure (i.e., the reactor building) have been analyzed for pipe break effects including jet impingement, jet reaction, pipe whip, and subcompartment pressurization. Where necessary, these loads were included in the design of the structure to ensure that the secondary containment can perform its required functions as defined in Section 6.2.3.

15.0.3.5 Radiological Consequences

This section addresses the radiological release consequences during the incidents of moderate frequency (anticipated operational transients), infrequent incidents (abnormal operational transients), and limiting faults (design basis accidents [DBA]) events. For all events where consequences are limiting a detailed quantitative evaluation is presented. For nonlimiting events, a qualitative evaluation is presented or the results are referenced from a more limiting or enveloping case or event.

For limiting faults (DBA), conservative assumptions considered to be acceptable to the NRC for the purpose of worst case bounding of the event and determining the adequacy of the plant design to meet 10 CFR 50.67 requirements are assumed. This is referred to as the “design basis analysis.”

The atmospheric dispersion coefficients are presented in Tables 15.0-4 and 15.0-5. Reference will be made to these tables in the discussion of the analyses.

15.0.4 REFERENCES

15.0-1 Supplemental Reload Licensing Report for Columbia (most recent version referenced in COLR).

15.0-2 General Electric Company, General Electric BWR Thermal Analysis Basis (GETAB); Data, Correlation, and Design Application, NEDO-10958-A, January 1977.

15.0-3 GE Nuclear Energy, "WNP-2 Power Uprate Transient Analysis Task Report," GE-NE-208-08-0393, Revision 0, September 1993 (Proprietary).

15.0-4 GE-Hitachi Report, "Evaluation of Steam Flow Induced Error Impact on the L3 Setpoint Analysis Limit," GEH-NE-0000-0077-4603, December 2007.

15.0-5 General Electric Company, "General Electric Standard Application for Reactor Fuel," NEDE-24011-P-A, and supplement for United States, NEDE-24011-P-A-US (most recent approved version referenced in COLR).

15.0-6 GE-Hitachi Nuclear Energy, "Safety Analysis Report for Columbia Generating Station Thermal Power Optimization," NEDC-33853P, March 2016.

Table 15.0-1

Results Summary of Transient Events Applicable to Columbia Generating Station[a]

Paragraph I.D.	Figure I.D.	Description	Maximum Neutron Flux (%NBR)[e]	Maximum Dome Pressure (psig)	Maximum Vessel Pressure (psig)	Maximum Steam Line Pressure (psig)	Maximum Core Average Surface Heat Flux (% of Initial)	DCPR[b,c,e]	Frequency Category
15.1		DECREASE IN REACTOR COOLANT TEMPERATURE							
15.1.1		Loss of Feedwater Heating, Manual Flow Control						0.12[k]	(d)
15.1.2	15.1-1	Feedwater Controller Failure, Max Demand	297	1191	1218	1189		0.31[k]	(d)
15.1.3	15.1-2	Pressure Regulator Fail-Open	129	1151	1172	1151	100	<0.01	
15.1.4		Inadvertent Opening of Safety or Relief Valve	102	1020	1061	1012	100	<0.01	(d)
15.1.6		RHR Shutdown Cooling Malfunction Decreasing Temperature	See text						(d)
15.2		INCREASE IN REACTOR PRESSURE							
15.2.1		Pressure Regulator Fail-Closed	160	1188	1220	1187	106	n/a	(d)
15.2.2	15.2-1	Generator, Load Rejection, Bypass-On[f]	See text						(d)
15.2.2	15.2-2	Generator Load Rejection, Bypass-Off	325	1245	1271	1241		0.32[k]	(d)
15.2.3	15.2-3	Turbine Trip, Bypass-On[f]	See text						(d)
15.2.3	15.2-4	Turbine Trip, Bypass-Off	308	1242	1268	1238		0.31[k]	(d)
15.2.4	15.2-5	Inadvertent MSIV Closure	203	1200	1234	1198	100	0.022	(d)
15.2.5	15.2-6	Loss of Condenser Vacuum	194	1173	1199	1166	111	0.12	(d)
15.2.6	15.2-7	Loss of Auxiliary Power Transformers	104[h]	1169	1185	1166	100	<0.01	(d)
15.2.6	15.2-8	Loss of All Grid Connections	193	1173	1196	1166	106	0.079	(d)
15.2.7	15.2-9	Loss of all Feedwater Flow	104[h]	1142	1152	1142	100	<0.01	(d)
15.2.8		Feedwater Piping Break	See Section 15.6.6						
15.2.9		Failure of RHR Shutdown Cooling	See text						

Table 15.0-1

Results Summary of Transient Events Applicable to Columbia Generating Station[a] (Continued)

Paragraph I.D.	Figure I.D.	Description	Maximum Neutron Flux (%NBR)[e]	Maximum Dome Pressure (psig)	Maximum Vessel Pressure (psig)	Maximum Steam Line Pressure (psig)	Maximum Core Average Surface Heat Flux (% of Initial)	DCPR[b,c,e]	Frequency Category
15.3		DECREASE IN REACTOR COOLANT SYSTEM FLOW RATE							
15.3.1	15.3-1	Trip of One Recirculation Pump Motor	104[h]	1020	1059	1012	100	<0.01	(d)
15.3.1	15.3-2	Trip of Both Recirculation Pump Motors	104[h]	1077	1088	1076	100	<0.01	(d)
15.3.2	15.3-3	Speed Decrease of One Main Recirc Motor	104[h]	1020	1059	1012	100	<0.01	(d)
15.3.2	15.3-4	Speed Decrease of Two Main Recirc Motors	104[h]	1061	1072	1061	100	<0.01	(d)
15.3.3	15.3-5	Seizure of One Recirculation Pump	104[h]	1099	1110	1098	100	<0.01	(i)
15.3.4		Recirc Pump Shaft Break	See 15.3.3						
15.4		REACTIVITY AND POWER DISTRIBUTION ANOMALIES							
15.4.1.1		RWE - Refueling	See text						(j)
15.4.1.2		RWE - Startup	See text						(j)
15.4.2		RWE - At Power	See text						(d)
15.4.3		Control Rod Misoperation	See Sections 15.4.1 and 15.4.2						
15.4.4	15.4-1	Abnormal Startup of Idle Recirculation Loop	122[c]	1004	1026	998	190	0.53	(d)
15.4.5	15.4-2	Speed Increase of One Main Recirc Motor	134[c]	990	1009	986	127	0.15	(d)
15.4.5		Speed Increase of Both Main Recirc Motors	150[c]	1006	1033	1001	149	0.27	(d)
15.4.7		Misplaced Bundle Accident	See text						(j)
15.4.9		Rod Drop Accident							(i)
15.5		INCREASE IN REACTOR COOLANT INVENTORY							
15.5.1	15.5-1	Inadvertent HPCS Pump Start[f]	100[h]	1020	1052	1012	100	<0.01[g]	(d)
15.5.3		BWR Transients	See appropriate events in Sections 15.1 and 15.2						

[a] Results reflect GE14 fuel introduction, and updates from GNF2 introduction some of which are dependent on fuel design and core loading pattern. Compliance with the event acceptance criteria is demonstrated by cycle-dependent analysis of potentially limiting events just prior to the operation of that cycle. The results are reported in the Supplemental Reload Licensing Report (Reference 15.0-1).

Table 15.0-1

Results Summary of Transient Events Applicable to Columbia Generating Station[a] (Continued)

[b] MCPR operating limits are based on the delta-CPR (DCPR) results from the limiting transient event and the $MCPR_{99.9\%}$ defined in the COLR.

[c] Option B DCPR results are reported.

[d] Moderate frequency.

[e] For Measurement Uncertainty Recapture (MUR), non-limiting events are not re-analyzed, but reported results are scaled from 3486 MWt to 3544 MWt rated, unless otherwise indicated.

[f] Non-limiting event under power uprate conditions (event not reanalyzed).

[g] ODYN results without the adjustment factors delineated in the ODYN Report NEDO-24154, NEDC-24154P.

[h] No increase from initial value.

[i] Limiting fault.

[j] Infrequent incident.

[k] This value is only for the more limiting GNF2 fuel and does not include plant specific TRACG bias and uncertainty.

Table 15.0-1A

Summary of Transient Peak Value Results
Single-Loop Operation

Paragraph/ Figure	Description	Maximum Neutron Flux (% NBR)	Maximum System Pressure (psig)	Frequency Category
	Initial condition	73.8	1020	N/A
15.1.2/ 15.1-3	Feedwater flow controller failure (maximum demand) uprated power	87.5	1118	(a)
15.2.2	Generator load rejection - uprated power	129	1184	(a)
15.3.3/ 15.3-6	Seizure of active recirculation pump	73.8	1017	(b)

[a] Moderate frequency incident.
[b] Limiting fault.

Table 15.0-2

Input Parameters and Initial Conditions for Transients

		REDY (ASD Events)	REDY	ODYN
1.	Thermal power level, MWt[a]			
	Rated value	3486	3323	3486
	Analysis value	3702	3464	3629
2.	Steam flow, lbs/hr analysis value	16.09×10^6	14.98×10^6	15.73×10^6
3.	Core flow, lbs/hr	108.5×10^6	108.36×10^6	$95.5\text{-}115.0 \times 10^6$
4.	FW flow rate, lb/sec analysis value	4471	4161	4362
5.	Feedwater temperature, °F	426	424	426
6.	Vessel dome pressure, psig	1020	1020	1020
7.	Vessel core pressure, psig	1031	1031	1031
8.	Turbine bypass capacity, %NBR	22.7	25	22.7
9.	Core coolant inlet enthalpy, Btu/lb	528.3	529.3	529.6
10.	Turbine inlet pressure, psig	992	975	997
11.	Fuel lattice	8 x 8/9 x 9	8x8	Simulated 8x8/9x9
12.	Core average fuel cladding gap conductance, Btu/sec-ft^2-°F	0.3608	0.1667	Fuel specific
13.	Core leakage flow, %	10.20	11.84	Cycle specific
14.	Required MCPR operating limit	(b)	1.24	(c)
15.	$MCPR_{99.9\%}$	(b)	1.06	(c)
16.	Doppler coefficient (-)¢/°			
	Nominal EOC-1	0.311	0.227	(d)
	Analysis data ASD events 1. Increase power 2. Decrease power	 0.295 0.327	 0.215	
17.	Void coefficient (-)¢/% Rated			
	Nominal EOC-1		7.48	(d)
	Analysis data for power increase events	15.93	12.70	(d)
	Analysis data for power decrease events	12.10	7.065	(d)
18.	Core average rated void fraction, % (Steady state)	41.24	41.32	43.1
19.	Scram reactivity, $k analysis data	Figure 15.0-1	Figure 15.0-1	(d)
20.	Control rod drive speed, position versus time	Figure 15.0-1	Figure 15.0-1	Figure 15.0-1
21.	Jet pump ratio, M	2.36	2.41	2.39

Table 15.0-2

Input Parameters and Initial Conditions for Transients (Continued)

		REDY (ASD Events)	REDY	ODYN
22.	Safety/relief valve capacity, % NBR			
	safety valve capacity @ 1241 psig	108.6	111.5	108.6
	Relief valve capacity @ setpoint values in item 25 of this table	@ 1121 psig 98.3 @ 1131 psig 99.1 @ 1141 psig 100.0 @ 1151 psig 100.9 @ 1161 psig 101.7	101.8 102.8 103.7 104.6 105.5	98.3 99.1 100 100.9 101.7
	Manufacturer		Crosby	Crosby
	Quantity installed		18	18
23.	Relief function delay, sec	0.4	0.4	0.4
24.	Relief function response, sec	0.15	0.1	0.15
25.	Setpoints for safety/relief valves			
	Safety function, psig	1200, 1210 1221, 1231 1241	1177, 1187, 1197, 1207, 1217	1200, 1210 1221, 1231 1241
	Relief function, psig	1121, 1131 1141, 1151 1161	1091, 1101, 1111, 1121, 1131	1121, 1131 1141, 1151 1161
26.	Number of valve groupings simulated			
	Safety function, number		5	5
	Relief function, number		5	5
27.	High flux trip analysis setpoint (123 x 1.041), % NBR	128.0	126.20	128[e]
28.	High pressure scram setpoint, psig	1086	1071	1086
29.	Vessel level trips, inches with respect to dryer skirt bottom			
	Level 8 - (L8), in.	59.5	55.5	59.5
	Level 4 - (L4), in.		31.5	30
	Level 3 - (L3), in.	7.5[i]	12.5[i]	(f)
	Level 2 - (L2), in.		(-38)	(f)
30.	APRM thermal trip analysis setpoint			
	(117 x 1.041)% NBR @ 100% core flow	121.8	122.030	121.8[e]
31.	Recirculation pump trip delay, sec	0.190	0.140	0.190
32.	Recirculation pump trip inertia time constant for analysis, sec	6[g]	6[g]	6[g]
33.	RPS response time delay	(h)	(h)	(h)

Table 15.0-2

Input Parameters and Initial Conditions for Transients (Continued)

[a] Defines rated thermal power associated with the analysis. REDY values reflect original rated thermal power, REDY ASD Events and ODYN values reflect the 3486 MWt reactor power uprate. %NBR values correspond to the rated thermal power values. Measure Uncertainty Recapture power uprate values are in Table 15.0-2B. Reported results are scaled to 3544 MWt, unless otherwise indicated.

[b] See COLR.

[c] Not applicable to reload 7/cycle 8 simulation.

[d] ODYN values are calculated within the code.

[e] The thermal multiplier (1.041 = 3629/3486) is used to give a conservative margin that is proportional to the core power.

[f] Parameter not used in the analysis.

[g] The inertia time constant is defined by the expression:

$$t = \frac{2 \pi J_O n}{g T_O}$$

where

t = inertia time constant (sec)
J_o = pump motor inertia (lb-ft^2)
n = rated pump speed (rps)
g = gravitational constant (ft/sec^2)
T_o = pump shaft torque (lb-ft)

[h] The "maximum overall response time" as addressed in the LCS is utilized for each scram encountered in the Chapter 15 events.

[i] The impact of steam flow induced error on the analytical limit does not impact event descriptions or conclusions (Reference 15.0-4).

Table 15.0-2A

Input Parameters and Initial Conditions for Transients and Accidents for Single-Loop Operation

		Original Rated Power	Uprated Power
1.	Thermal power analysis value (MWt)	2596.9	2615
2.	Flow		
	Steam (1b/hr)	10.79×10^6	10.76×10^6
	Core (lb/hr)	59.0×10^6	61.85×10^6
	Core bypass (lb/hr)	5.88×10^6	6.22×10^6
	Feedwater (lb/hr)	10.79×10^6	10.76×10^6
	Turbine bypass (lb/hr)	5.88×10^6	N/A
	Turbine bypass (% rated)	N/A	23%
3.	Core Inlet Enthalpy (Btu/lb)	510.8	513.7
4.	Pressure		
	Vessel dome (psia)	1020	1008
	Vessel core (psia)	1029.7	1017.7
	Turbine inlet (psia)[a]	960.5	1000
5.	Jet pump ratio (M)	3.2	3.4
6.	Safety/relief valve capacity		
	% NBR @ 1,164 psig	107.1	N/A
	Manufacturer	Crosby	Crosby
	Quantity installed	18	18
	% NBR @ 1241 psig	N/A	108.6
7.	Relief function		
	Delay (sec)	0.4	0.4
	Response (sec)	0.1	0.15

Table 15.0-2A

Input Parameters and Initial Conditions for Transients and Accidents for Single-Loop Operation (Continued)

		Original Rated Power	Uprated Power
8.	Setpoints for safety/relief valves		
	Safety function (psig)	1177, 1187, 1197, 1207, 1217	1200, 1210, 1221, 1231, 1241
	Relief function (psig)	1106, 1116, 1126, 1136, 1146	1121, 1131, 1141, 1151, 1161
9.	Number of valve groupings simulated		
	Safety function (number)	5	5
	Relief function (number)	5	5
10.	Setpoints		
	High flux trip analysis (1.21 x 1.043) (% NBR)	126.2	128
	High pressure scram (psig)	1071	1086
	APRM thermal trip (% NBR @ 100% core flow)	122.03	121.8
11.	Vessel level trips (ft above instrument zero)		
	Level 8 - (L8) (ft)	4.542	
	Level 4 - (L4) (ft)	2.625	
	Level 3 - (L3) (ft)	1.083[b]	
	Level 2 - (L2) (ft)	(-)4.167	
12.	RPT delay (sec)	0.19	0.19
13a.	RPT inertia for analysis (lb/ft^2)	24,500	N/A
13b.	RPT inertia time constant (sec)	N/A	6

[a] Pressure specified at rated power condition. Off-rated power pressure drop is calculated by transient analysis code.

[b] The impact of steam flow induced error on the analytical limit does not impact event descriptions or conclusions (Reference 15.0-4).

Table 15.0-2B

Input Parameters and Initial Conditions for
ARTS/MELLLA, MUR and GNF Reload Transient Analyses

	Parameter	ARTS/MELLLA	MUR/Reload
1.	Thermal power level, MWt	3486	3544
2.	Steam flow, lbs/hr analysis value	15.01×10^6	15.28×10^6
3.	Core flow, lbs/hr	$87.6 - 115.0 \times 10^6$	$89.7 - 115.0 \times 10^6$
4.	FW flow rate, lb/sec analysis value	4161.6	4236.9
5.	Feedwater temperature, °F	421.2	422.1
6.	Vessel dome pressure, psig	1020	
7.	Vessel core pressure, psig	1032	
8.	Turbine bypass capacity, %NBR	23.75	23.33
9.	Core coolant inlet enthalpy, Btu/lb (rated flow)	527.2	528.5
10.	Turbine inlet pressure, psig	990	
11.	Fuel lattice	10 x 10 mixed core	
12.	Required MCPR operating limit	See COLR	
13.	$MCPR_{99.9\%}$	See COLR	
14.	Control rod drive speed, position versus time[a]		
15.	Jet pump ratio, M	2.285	
16.	Safety/relief valve capacity, % NBR safety valve capacity	See Table 5.2-3	
	Manufacturer	Crosby	
	Quantity installed	18	
17.	Relief valve function		
	delay, sec	0.4	
	response, sec	0.15	
18.	Safety valve function		
	delay, sec	0.0	
	response, sec	0.3	

Table 15.0-2B

Input Parameters and Initial Conditions for GNF Reload Transient (Continued)

Parameter		Value	
19.	Setpoints for safety/relief valves	# in Group	Setpoint
	Safety function, psig	2[b]	1200
		4[b]	1210
		4	1221
		4	1231
		4	1241
	Relief function, psig	2[b]	1156
		4[b]	1166
		4	1176
		4	1186
		4	1196
20.	Number of valve groupings simulated		
	Safety function, number (actual/credited)	5 / 3	
	Relief function, number (actual/credited)	5 / 3	
21.	High flux trip analysis setpoint, % NBR	123.0	
22.	High pressure scram setpoint, psig	1086	
23.	Vessel level trips, inches with respect to instrument zero		
	Level 8 – (L8), in.	59.5	
	Level 4 – (L4), in.	30	
	Level 3 – (L3), in.	2.5[c]	
	Level 2 – (L2), in.	-90 LOCA -70 Non LOCA	
24.	APRM thermal trip analysis setpoint	Not credited	
25.	Recirculation pump trip delay, sec	0.200	
26.	RPS response time delay	See LCS	

[a] See Section 4.6.1.1.2.5.3.
[b] Valve group function not credited in safety analyses.
[c] This allows the correction due to steam flow induced error (Reference 15.0-4).

Table 15.0-3

Summary of Accidents

Paragraph I.D.	Title	Failed Fuel Calculated Value
15.3.3	Seizure of one recirculation pump	None
15.3.4	Recirculation pump shaft break	None
15.4.9	Rod drop accident	850 rods
15.6.2	Instrument line break	None
15.6.4	Steam system pipe break outside containment	None
15.6.5	Loss-of-coolant accident within RCPB	100%
15.6.6	Feedwater line break	None
15.7.1	Main condenser gas treatment system failure	N/A
15.7.3	Liquid radwaste tank failure	N/A
15.7.4	Fuel handling accident	250 rods
15.8	Anticipated transients without scram	None

Table 15.0-4

χ/Q (s/m^3) values for the EAB and LPZ

Time Period	EAB χ/Q (s/m^3)	LPZ χ/Q (s/m^3)
0 - 2 hrs	1.81 E-4	4.95 E-5
2 - 8 hrs		4.95 E-5
8 - 24 hrs		3.69 E-5
1 - 4 d		1.95 E-5
4 - 30 d		7.81 E-6

Table 15.0-5

Control Room Atmospheric Dispersion Factors
(sec/m^3)

	Hours	Turbine Building	Secondary Containment	SGT System Release
Filtered Intake Release Path	0 - 2	8.81E-4	2.82E-4	1.43E-4
	2 - 8	3.75E-4	2.17E-4	1.05E-4
	8 - 24	1.93E-4	8.77E-5	4.14E-5
	24 - 96	1.50E-4	7.42E-5	3.52E-5
	96 - 720	1.44E-4	6.40E-5	3.03E-5
Unfiltered Intake Release Path	0 - 2	4.70E-3	7.02E-4	6.95E-4
	2 - 8	2.00E-3	3.19E-4	3.36E-4
	8 - 24	1.03E-3	1.30E-4	1.28E-4
	24 - 96	8.01E-4	1.05E-4	9.72E-5
	96 - 720	7.69E-4	9.00E-5	7.69E-5

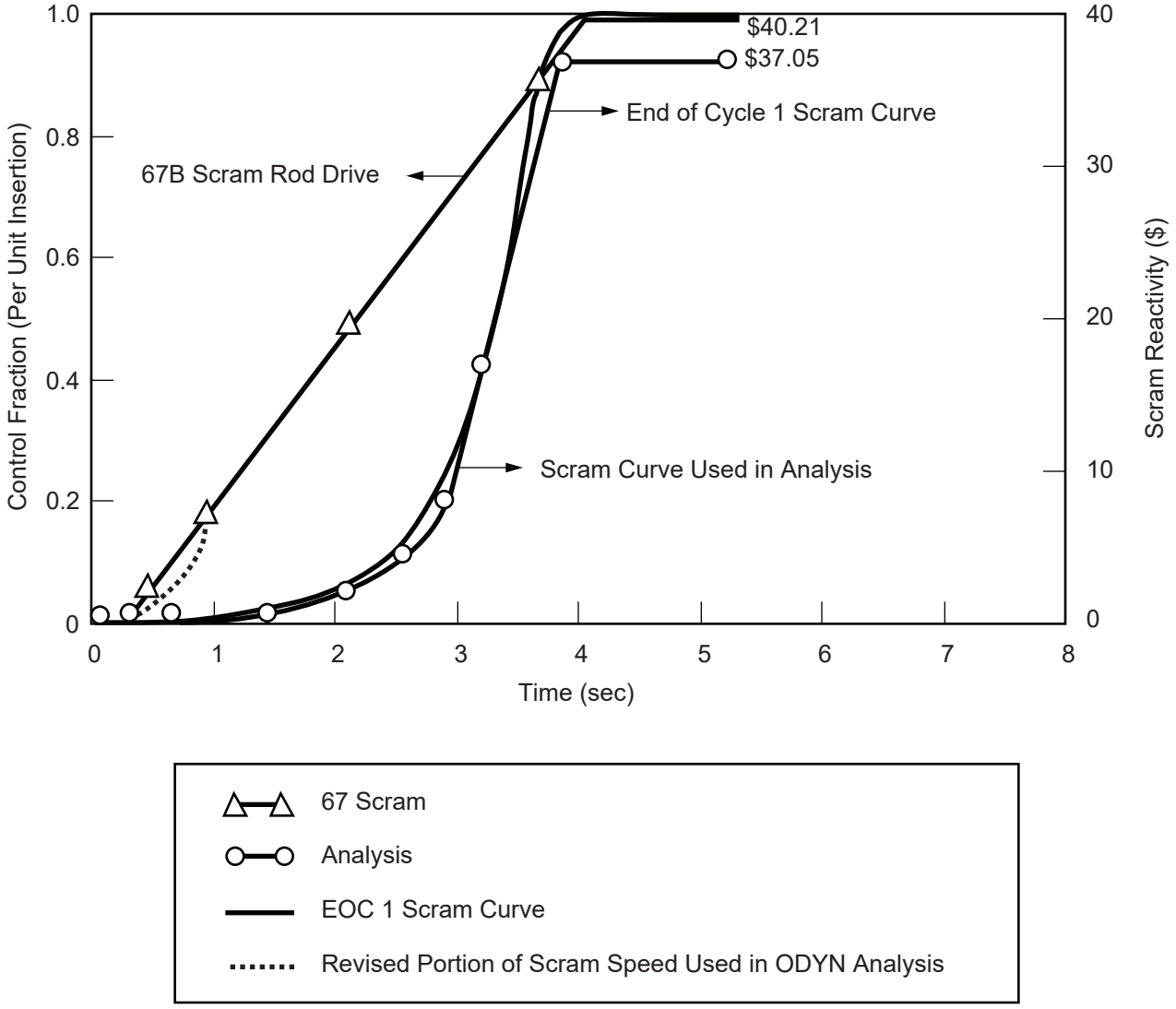

Columbia Generating Station **Final Safety Analysis Report**	**Scram Position and Reactivity Characteristics**		
	Draw. No. **900547.61**	Rev.	Figure **15.0-1**

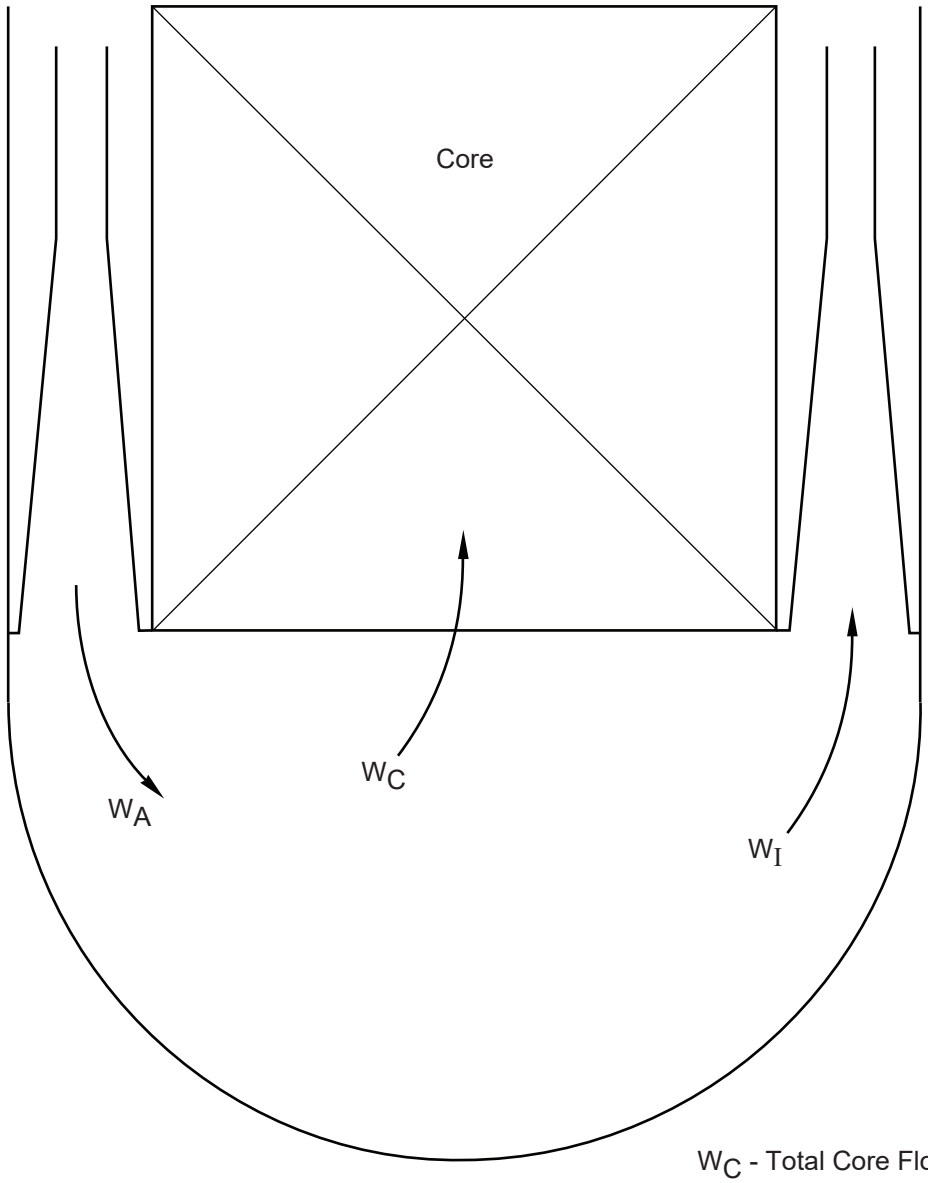

W_C - Total Core Flow
W_A - Active Loop Flow
W_I - Inactive Loop Flow

Columbia Generating Station Final Safety Analysis Report	**Illustration of Single Recirculation Loop Operation Flows**		
	Draw. No. 910402.42	Rev.	Figure 15.0-2

15.1 DECREASE IN REACTOR COOLANT TEMPERATURE

15.1.1 LOSS OF FEEDWATER HEATING

15.1.1.1 Identification of Causes and Frequency Classification

15.1.1.1.1 Identification of Causes

A feedwater heater can be lost in at least two ways:

a. Steam extraction line to heater is closed, and
b. Steam is bypassed around heater.

The first case produces a gradual cooling of the feedwater. In the second case, the steam bypasses the heater and no heating of that feedwater occurs. In either case, the reactor vessel receives cooler feedwater. The maximum number of feedwater heaters that can be tripped or bypassed by a single event represents the most severe transient for analysis considerations. This event has been conservatively estimated to incur a loss of up to 100°F of the feedwater heating capability of the plant and causes an increase in core inlet subcooling. This increases core power due to the negative void reactivity coefficient.

15.1.1.1.2 Frequency Classification

This event is considered to be an incident of moderate frequency and is analyzed under worst case conditions of a 100°F loss at full power.

15.1.1.2 Sequence of Events and Systems Operation

The loss of feedwater heating leads to a gradual decrease in the temperature of the feedwater entering the reactor vessel. The decrease in feedwater temperature results in an increase in the core inlet subcooling which collapses voids, and increases the core average power. The gradual power change allows fuel thermal response to maintain pace with the increase in neutron flux. For this analysis, it was assumed that the initial feedwater temperature dropped 100°F.

In establishing the expected sequence of events and simulating the plant performance, it was assumed that normal functioning occurred in the plant instrumentation and controls, plant protection, and reactor protection systems. Engineered safety feature (ESF) system initiation is not anticipated or required to prevent or mitigate the transient.

The Average Power Range Monitor (APRM) Simulated Thermal Power trip setpoint provides protection against transients such as the Loss of Feedwater Heating where thermal power increases slowly. While the sequence of events may produce sufficiently high

flux levels to initiate an APRM reactor protection system trip, no credit is taken for a reactor trip in the analysis of the event. A description of the APRM system and operation is provided in Sections 7.2.1.1.1.2 and 7.6.1.4.3.

15.1.1.2.1 The Effect of Single Failures and Operator Errors

The loss of feedwater heating generally leads to an increase in reactor power level. The APRM system is the mitigating system and is designed to be single failure proof. Therefore, single failures are not expected to result in a more severe event than analyzed.

15.1.1.3 Core and System Performance

15.1.1.3.1 Mathematical Model

The analytical dynamic behavior has been determined using the steady state boiling water reactor (BWR) simulator code PANACEA (Reference 15.1-2). This code does not provide plots of the dynamic behavior of basic parameters as a function of time nor does it provide information for a sequence of events table. Therefore, no figures or tables are available. Reference 15.1-6 approves the use of PANACEA for modeling the Loss of Feedwater Heating event.

The loss of feedwater heating (LFWH) event analysis supports an assumed 100°F decrease in the feedwater temperature. The result is an increase in core inlet subcooling, which collapses voids, thereby, increasing the core power and shifting the axial power distribution toward the bottom of the core. As a result of the axial power shift and increased core power, voids begin to build up at the bottom of the core, acting as negative feedback to the void collapse process. The negative feedback moderates the core power increase. The PANACEA code is used to determine the change in minimum critical power ratio (MCPR) during the event. Analyses were performed for a range of cycle exposures to ensure that appropriate limits are set. Although there is a substantial increase in core thermal power during the event, the increase in steam flow is much less because a large part of the added power is used to overcome the increase in inlet subcooling. The increase in steam flow is accommodated by the pressure control system by the turbine control (governor) valves or the turbine bypass valves, so no pressurization occurs (Reference 15.1-3).

15.1.1.3.2 Input Parameters and Initial Conditions

These analyses have been performed, unless otherwise noted, with plant conditions tabulated in Table 15.0-2B.

15.1.1.3.3 Results

The LFWH transient is analyzed for each reload core to quantify the reduction in thermal margins. The results of the analysis are provided in the cycle specific Supplemental Reload Licensing Report (Reference 15.1-3).

15.1.1.3.4 Considerations of Uncertainties

Factors such as exposure and magnitude of feedwater temperature change are assumed to be at the worst configuration so that any deviations seen in the actual plant operation reduce the severity of the event.

15.1.1.4 Barrier Performance

The consequences of this event do not result in any temperature or pressure transient in excess of the criteria for which the fuel, pressure vessel, or containment are designed. Therefore, barrier integrity and function is maintained.

15.1.1.5 Radiological Consequences

Since this event does not result in any additional fuel failures or any release of primary coolant to either the secondary containment or to the environment, there are no radiological consequences associated with this event.

15.1.2 FEEDWATER CONTROLLER FAILURE - MAXIMUM DEMAND

15.1.2.1 Identification of Causes and Frequency Classification

15.1.2.1.1 Identification of Causes

This event is postulated on the basis of a single failure of a control device, specifically one that can directly cause an increase in coolant inventory by increasing the feedwater flow. The most severe applicable event is a feedwater controller failure (FWCF) during maximum flow demand. The feedwater controller is forced to its upper limit at the beginning of the event. The event is evaluated for both single and two reactor recirculation loop operations. Because the two-loop operation event is bounding, the core performance analysis is limited to the feedwater controller failure during two-loop operation. However, the MCPR operating limit for single loop operation (SLO) is obtained by adding the ΔCPR from two-loop operation to the $MCPR_{99.9\%}$ for SLO.

15.1.2.1.2 Frequency Classification

This event is considered to be an incident of moderate frequency.

15.1.2.2 Sequence of Events and Systems Operation

The increase in feedwater flow, due to a failure of the feedwater control system to maximum demand, results in an increase in the water level and a decrease in the coolant temperature at the core inlet. The increase in core inlet subcooling causes an increase in core power. As the feedwater flow continues at maximum demand, the water level continues to rise and eventually reaches the high water level trip setpoint. The initial water level is conservatively assumed to be at the low level normal operating range of 30 inches above instrument zero to delay the high-level trip and maximize the core inlet subcooling that results from the FWCF. The high water level trip causes the turbine throttle (stop) valves to close in order to prevent damage to the turbine from excessive liquid inventory in the steam line. The valve closures create a compression wave that travels to the core causing a void collapse and subsequent rapid power excursion. In addition to the turbine throttle valve closure, the turbine governor valves also close in the fast closure mode. The closure of the governor (control) turbine valves initiates a reactor scram and a recirculation pump trip. Because of the partially opened initial position of the governor valves, they will close faster than the throttle valves and initiate the pressurization portion of the event. The turbine bypass valves are assumed operable and provide some pressure relief. The core power excursion is mitigated in part by the pressure relief, but the primary mechanisms for termination of the event are reactor scram and revoiding of the core.

The high-pressure core spray (HPCS) system and reactor core isolation cooling (RCIC) system initiate on a low reactor water level (L2) to maintain long-term water level control following tripping of feedwater pumps. The analysis of this event assumes normal functioning of plant instrumentation and controls, plant protection and reactor protection systems.

Table 15.1-1 lists the sequence of events for Figure 15.1-1. The figure shows the changes in variables during this transient.

15.1.2.2.1 Sequence of Events and Systems Operation – Single Loop Operation

The simulated feedwater controller transient is shown in Figure 15.1-3 for the case of 73.8% power, 57% core flow. The high-water level turbine trip and feedwater pump trip are initiated at approximately 8.4 sec. A scram occurs simultaneously with the turbine trip and limits the neutron flux peak and fuel thermal transient so no fuel damage occurs.

Table 15.1-1A lists the sequence of events for Figure 15.1-3. The figures show the changes in important variables during this transient.

Identification of Operator Actions

a. Observe high feedwater pump trip has terminated the failure event,

b. Switch the feedwater controller from auto to manual control to try to regain a correct output signal, and

c. Conduct follow-up assessment.

15.1.2.2.2 The Effect of Single Failures and Operator Errors

The first sensed event to initiate corrective action to the transient is the vessel high water level (L8) trip. Multiple level sensors are used to sense and detect when the water level reaches the L8 setpoint. At this point in the logic, a single failure will not initiate or prevent a turbine trip signal. Turbine trip signal transmission, however, is not built to single failure criterion. The result of a failure at this point would have the effect of delaying, but not impacting, the pressurization "signature."

Scram trip signals from the turbine are designed such that a single failure will neither initiate nor impede a reactor scram trip initiation.

15.1.2.3 Core and System Performance

15.1.2.3.1 Mathematical Model

The predicted dynamic behavior has been determined using a computer simulated, analytical model of a direct-cycle BWR. This model is described in detail in Reference 15.1-3. Results from the two-loop operation bound the SLO event. Therefore, the discussion of core and system performance is limited to the description of the analysis for two-loop operation.

The nonlinear computer simulated analytical model is designed to predict associated transient behavior of the reactor. Some of the significant features of the model are the following:

a. An integrated three-dimensional neutron kinetics core model is assumed which includes a detailed description of hydraulic feedback effects, axial power shape changes, and reactivity feedbacks;

b. The fuel is represented by a separate channel grouping scheme based on the distinct characteristics of the fuel bundles in the core;

c. The four physical steam lines are modeled as two steam lines, one a single steam line and the other as three lumped steam lines. The modeled steam lines are connected with a tee component and another tee connected downstream which is connected to a valve component modeling the Turbine Bypass Valves (TBVs). Also associated with these steam lines are valve components modeling the inboard and outboard main steam isolation valves, the Safety/Relief valves, and the Turbine Control Valves. Pressure boundary condition components are

connected to the downstream sides of the S/RVs, and the TBVs. A flow boundary condition component represents the steam mass flow rate through the TCVs. This mass flow rate is calculated by the TRACG control system logic. The open area fraction of the S/RVs and TBVs is determined by the TRACG control system logic. TRACG control systems are used extensively in modeling plant component and system behavior.;

d. The code is based on a multi-dimensional two-fluid model for the reactor thermal hydraulics. The basic two-phase, two-fluid model consists of the volume and time averaged conservation equations for mass, momentum, and energy for each phase. Thus, the model does not assume thermal or mechanical equilibrium between the phases;

e. A control system model capable of simulating major BWR controls systems, such as feedwater flow, recirculation flow, reactor water level, pressure, and load demand; and

f. The ability to simulate necessary reactor protection system functions is provided.

15.1.2.3.2 Input Parameters and Initial Conditions

These analyses have been performed with the plant conditions in Table 15.0-2B.

All rods out scram characteristics are assumed. The safety/relief valve (SRV) action is conservatively assumed to occur with higher than nominal setpoints. The transient is simulated by programming an upper limit failure in the feedwater system such that 139% feedwater flow occurs at the nominal reactor operating pressure of 1035 psia.

An increase in feedwater flow will cause a corresponding drop in feedwater temperature. However, the relatively large time constant of the feedwater heaters (order of minutes) plus the flow transport time (10 sec from heaters to vessel and 3 sec from sparger to core) would preclude any effect of temperature reduction on the transient since the transient is essentially over in about 20 sec. Therefore, feedwater temperature is assumed to remain constant.

15.1.2.3.3 Results

The simulated feedwater controller transient is shown in Figure 15.1-1. The high water level turbine trip and feedwater pump trip are initiated as stated in Table 15.1-1. Results reflect GNF2 fuel introduction, some of which are dependent on fuel design and core loading pattern. Compliance with the event acceptance criteria is demonstrated by cycle-dependent analysis of potentially limiting events just prior to the operation of that cycle. The results are reported in the Supplemental Reload Licensing Report (Reference 15.1-3).

Because the total change in feedwater flow is greatest from reduced power conditions, the feedwater controller failure (FWCF) transient was analyzed for several reduced power states. The power dependent MCPR limits are established to protect the fuel during the FWCF event.

15.1.2.3.4 Consideration of Uncertainties

All systems used for protection in this event were assumed to have the most conservative response characteristics. Therefore, actual plant behavior is expected to lead to a less severe transient.

15.1.2.4 Barrier Performance

The consequences of this event do not result in any temperature or pressure transient in excess of the criteria for which the fuel, pressure vessel, or containment are designed. Therefore, barrier integrity and function is maintained.

15.1.2.5 Radiological Consequences

The consequence of this event does not result in fuel failure. It does result in the discharge of normal coolant activity to the suppression pool by means of SRV operation, which is contained in the primary containment. This event does not result in an uncontrolled release to the environment, so the plant operator can choose to hold the activity in containment or discharge it when conditions permit. If purging of the containment is chosen, the release would be in accordance with established requirements.

15.1.3 PRESSURE REGULATOR FAILURE - OPEN

15.1.3.1 Identification of Causes and Frequency Classification

15.1.3.1.1 Identification of Causes

The total steam flow rate to the main turbine resulting from a pressure regulator malfunction in the Digital Electro-Hydraulic (DEH) control system is limited by a maximum flow limiter imposed at the turbine controls. This limiter is set to limit maximum steam flow demand to approximately 130% NBR.

If the triple redundant DEH control system fails such that the turbine control (governor) valves fully open and the turbine bypass valves partially open, the maximum steam flow is established.

15.1.3.1.2 Frequency Classification

This event is categorized as an incident of moderate frequency.

15.1.3.2 Sequence of Events and Systems Operation

15.1.3.2.1 Sequence of Events

Table 15.1-2 lists the sequence of events for Figure 15.1-2. Figure 15.1-2 depicts how the high water level turbine trip and isolation valve closure stops vessel depressurization and produces a normal shutdown of the reactor.

15.1.3.2.2 Systems Operation

Depressurization results in formation of voids in the reactor coolant and causes a decrease in reactor power almost immediately. In this simulation, the depressurization rate is large enough such that water level swells to the sensed level trip setpoint (L8), initiating main turbine and feedwater turbine trips. Position switches on the turbine stop (throttle) valves initiate a reactor scram and RPT and shut down the reactor. After the turbine trip, the failed DEH control system signals the bypass to open to full bypass flow of 25% NBR steam flow. After the pressurization resulting from the turbine stop (throttle) valve closure, the pressure increase opens the relief valves and pressure drops and continues to drop until turbine inlet pressure is below the low turbine pressure isolation setpoint when main steam line isolation limits the duration and severity of the depressurization.

In order to properly simulate the expected sequence of events, the analysis of this event assumed normal functioning of plant instrumentation and controls, plant protection, and reactor protection systems except as otherwise noted.

Initiation of HPCS and RCIC system functions will occur when the vessel water level reaches the L2 setpoint although this is not included in the analysis. Normal startup and actuation can take up to 30 sec before effects are realized. If these events occur, they will follow some time after the primary concerns of fuel thermal margin and overpressure effects have occurred and are expected to be less severe than those already experienced by the system.

15.1.3.2.3 The Effect of Single Failures and Operator Errors

This transient leads to a loss of pressure control such that the increased steam flow demand causes a depressurization. Instrumentation for pressure sensing of the turbine inlet pressure is designed to be single failure proof for initiation of MSIV closure.

Reactor scram sensing, originating from limit switches on the MSIVs, is designed to be single failure proof. It is, therefore, concluded that the basic phenomenon of pressure decay is adequately terminated.

15.1.3.3 Core and System Performance

15.1.3.3.1 Mathematical Model

The point-kinetics REDY model described in Section 15.0.3.3.1 is used to simulate this event.

15.1.3.3.2 Input Parameters and Initial Conditions

This transient is simulated by setting the DEH control system demand signal to a high value, which causes the turbine control (governor) valves to open fully and the turbine bypass valves to open partially. A DEH control failure with 130% steam flow demand signal was simulated as a worst case since 130% is the normal maximum flow limit in order to conform with Table 15.1-2.

A 5-sec isolation valve closure is assumed when the turbine pressure decreases below the turbine inlet low pressure setpoint for main steam line isolation initiation.

Reactor scram is initiated when the isolation valves reach the 10% closed position. This is the maximum travel from the full open position allowed by specification.

This analysis has been performed, unless otherwise noted, with the plant conditions listed in Table 15.0-2.

15.1.3.3.3 Results

Results are summarized in Table 15.0-1.

No significant reductions of fuel thermal margins occur. No significant thermal stresses are imposed on the reactor coolant pressure boundary (RCPB).

15.1.3.3.4 Consideration of Uncertainties

If the maximum flow limiter were set higher or lower than normal, a faster or slower loss in nuclear steam pressure would result. The rate of depressurization may be limited by the bypass capacity, but it is unlikely. For example, the turbine valves will open to the valves-wide-open state admitting slightly more than the rated steam flow, and with the limiter in this analysis set to fail at 130%, it is expected that less than 25% would be bypassed. This is, therefore, not a limiting factor for the plant. If the rate of depressurization does change, it will be terminated by the low turbine inlet pressure trip setpoint.

Depressurization rate has a proportional effect upon the voiding action in the core and the flashing in the vessel bulk water regions. If the rate is low enough, the water level may not swell to the high water level trip setpoint and the isolation will occur earlier when pressure at

the turbine decreases below 795 psig. The reactor will scram as a result of the MSIV closure. Since power is being depressed as the pressure decreases (due to additional voiding in the core), this transient is less severe when a slower depressurization rate is assumed. Therefore, the assumed L8 trip provides the most restrictive margins on MCPR and peak vessel pressure.

15.1.3.4 Barrier Performance

Barrier performance analyses were not required since the consequences of this event do not result in any temperature or pressure transient in excess of the criteria for which fuel, pressure vessel, or containment are designed. Peak pressure in the bottom of the vessel is below the ASME code upset limit for the RCPB.

15.1.3.5 Radiological Consequences

The consequence of this event does not result in fuel failure. It does result in the discharge of normal coolant activity to the suppression pool by means of SRV operation, which is contained in the primary containment. This event does not result in an uncontrolled release to the environment, so the plant operator can choose to hold the activity in containment or discharge it when conditions permit. If purging of the containment is chosen, the release would be in accordance with established requirements.

15.1.4 INADVERTENT SAFETY/RELIEF VALVE OPENING

The event is defined as the inadvertent opening of an SRV which stays in the “open” position. It was determined that this event is not limiting from a core performance standpoint.

15.1.4.1 Identification of Causes and Frequency Classification

15.1.4.1.1 Identification of Causes

Cause of inadvertent opening is attributed to malfunction of the valve or an operator initiated opening. Opening and closing circuitry at the individual valve level (as opposed to groups of valves) is subject to a single failure impact. It is therefore simply postulated that a failure occurs and the event is analyzed accordingly. Detailed discussion of the valve is provided in Section 5.2.2.

15.1.4.1.2 Frequency Classification

This event is categorized as an incident of moderate frequency.

15.1.4.2 Sequence of Events and Systems Operation

15.1.4.2.1 Sequence of Events

Table 15.1-3 lists the sequence of events.

15.1.4.2.2 Systems Operation

In this transient, the analysis assumes normal functioning of plant instrumentation and controls, specifically, the relief valve discharge line temperature sensors and the suppression pool temperature sensors and reactor pressure vessel level control systems. The opening of an SRV allows steam to be discharged into the suppression pool. The sudden increase in the rate of steam flow leaving the reactor vessel causes a mild depressurization transient. The pressure regulator senses the nuclear system pressure decrease and within a few seconds closes the turbine control (governor) valve far enough to stabilize reactor vessel pressure at a slightly lower value and reactor power settles at nearly the initial power level. Additionally, although not credited in the analysis to mitigate the consequences of this transient, minimum reactor and plant protection systems, emergency core cooling system flow, and RHR suppression pool cooling, are available.

15.1.4.2.3 The Effect of Single Failures and Operator Errors

From a core performance standpoint, a single failure or operator error would simply activate the reactor protection system resulting in a plant shutdown. A single failure or operator error cannot increase the severity of this event.

The instrumentation which detects and audibly alarms the resulting suppression pool temperature rise, and the RHR containment heat removal system are designed to meet the single failure criteria. The operator must manually initiate suppression pool cooling.

15.1.4.3 Core and System Performance

15.1.4.3.1 Mathematical Model

The one-dimensional ODYN model described in Section 15.0.3.3.1 is used to simulate this event.

15.1.4.3.2 Input Parameters and Initial Conditions

These analyses have been performed, unless otherwise noted, with plant conditions tabulated in Table 15.0-2, the ODYN column. A discussion of the SRV is provided in Section 5.2.2.

15.1.4.3.3 Results

Thermal margins decrease only slightly through the transient, and no fuel damage results from the transient. The MCPR is essentially unchanged and, therefore, the $MCPR_{99.9\%}$ margin is unaffected.

15.1.4.4 Barrier Performance

The transient resulting from a stuck open relief valve is a mild depressurization which is within the range of normal load following. Therefore, there is no significant effect on RCPB and containment design pressure limits.

Since quenchers are used as steam discharge devices on the steam relief lines, no unstable condensation oscillations are expected which could damage the containment vessel. This is discussed in Appendix 3A.

Therefore, barrier integrity and function is maintained.

15.1.4.5 Radiological Consequences

While the consequence of this event does not result in fuel failure, it does result in the discharge of normal coolant activity to the suppression pool by means of SRV operation. Since this activity is contained in the primary containment there will be no exposures to operating personnel. Since this event does not result in an uncontrolled release to the environment the plant operator can choose to hold the activity in containment or discharge it to the environment when conditions permit. If purging of the containment is chosen, the release would be in accordance with established requirements.

15.1.5 SPECTRUM OF STEAM PIPING FAILURES INSIDE AND OUTSIDE OF CONTAINMENT IN A PRESSURIZED WATER REACTOR

This event is not applicable to BWR plants.

15.1.6 INADVERTENT RESIDUAL HEAT REMOVAL SHUTDOWN COOLING OPERATION

This transient is classified as a nonlimiting event for both original and uprated power conditions. Therefore, no further analysis has been performed.

15.1.6.1 Identification of Causes and Frequency Classification

15.1.6.1.1 Identification of Causes

At design power conditions no conceivable malfunction in the shutdown cooling system could cause temperature reduction.

In startup or cooldown operation, where the reactor is at or near critical, a very slow increase in reactor power could result. A shutdown cooling malfunction leading to a moderator temperature decrease could result from misoperation of the cooling water controls for the RHR heat exchangers. The resulting temperature decrease would cause a slow insertion of positive reactivity into the core. If the operator did not act to control the power level, a high neutron flux reactor scram would terminate the transient without violating fuel thermal limits and without any measurable increase in nuclear system pressure.

15.1.6.1.2 Frequency Classification

This event is categorized as an incident of moderate frequency.

15.1.6.2 Sequence of Events and Systems Operation

15.1.6.2.1 Sequence of Events

A shutdown cooling malfunction leading to a moderator temperature decrease could result from misoperation of the cooling water controls for RHR heat exchangers. The resulting temperature decrease causes a slow insertion of positive reactivity into the core. Scram will occur before any thermal limits are reached if the operator does not take action. The sequence of events for this event is shown in Table 15.1-4.

15.1.6.2.2 System Operation

A shutdown cooling malfunction causing a moderator temperature decrease must be considered in all operating states. However, this event is not considered while at power operation since pressure is too high to permit operation of RHR shutdown cooling.

No unique safety actions are required to avoid unacceptable safety results for transients as a result of a reactor coolant temperature decrease induced by misoperation of the shutdown cooling heat exchangers. In startup or cooldown operation, where the reactor is at or near critical, the slow power increase resulting from the cooler moderator temperature would be controlled by the operator in the same manner normally used to control power in the source or intermediate power ranges.

15.1.6.2.3 Effect of Single Failures and Operator Action

No single failures can cause this event to be more severe.

If the operator takes action, the slow power rise will be controlled in the normal manner. If no operator action is taken, a scram will terminate the power increase before thermal limits are reached.

15.1.6.3 Core and System Performance

The increased subcooling caused by misoperation of the RHR shutdown cooling mode could result in a slow power increase due to the reactivity insertion. This power rise would be terminated by a flux scram before fuel thermal limits are approached. Therefore, only a qualitative description is provided here.

15.1.6.4 Barrier Performance

The consequences of this event do not result in any temperature or pressure transient in excess of the criteria for which the fuel, pressure vessel, or containment are designed. Therefore, barrier integrity and function is maintained.

15.1.6.5 Radiological Consequences

Since this event does not result in any fuel failures, no analysis of radiological consequences is required for this event.

15.1.7 REFERENCES

15.1-1 For Power Uprate: GE Nuclear Energy, "WNP-2 Power Uprate Transient Analysis Task Report," GE-NE-208-08-0393, September 1993 (Proprietary).

15.1-2 NEDE-30130-P-A, "Steady State Nuclear Methods," April 1985.

15.1-3 Supplemental Reload Licensing Report for Columbia (most recent version referenced in COLR).

15.1-4 NEDC-24154-P-A, "Qualification of the One-Dimensional Core Transient Model for Boiling Water Reactors," Volumes 1, 2, 3 and 4, February 2000.

15.1-5 GE Nuclear Energy, "WNP-2 Power Uprate Project NSSS Engineering Report," GE-NE-208-17-0993, Revision 1, December 1994.

15.1-6 "General Electric Standard Application for Reactor Fuel," NEDE-24011-P-A and "Supplement for United States," NEDE-24011-P-A-US (most recent approved revision referenced in COLR).

15.1-7 NEDE-32906P-A, "TRACG Application for Anticipated Operational Occurrences Transient Analyses," Revision 3, September 2006.

Table 15.1-1

Typical Sequence of Events for Figure 15.1-1

Feedwater Controller Failure
100% Reactor Power / 106% Core Flow

Time (sec)	Event
0	Initiate simulated failure of 139% upper limit on feedwater flow.
10.06	L8 vessel level setpoint trips main turbine and feedwater pumps. Turbine bypass operation initiated.
10.16	Turbine control (governor) or stop (throttle) valves fully closed.
10.08	Reactor scram trip actuated from main turbine control (governor) valve fast closure.
10.16	Turbine bypass valves start to open.
10.27	Recirculation pump motor circuit breakers open causing decrease in core flow to natural circulation.

Table 15.1-1A

Sequence of Events for Figure 15.1-3

Feedwater Controller Failure
Single Loop Operation
73.8% Power / 57% Flow

Time (sec)	Event
0	Initiate an upper limit failure of 146% of rated feedwater flow.
8.39	L8 vessel level setpoint trips main turbine and feedwater pumps.
8.39	Recirculation pump trip (RPT) actuated by stop valve position switches.
8.40	Reactor scram trip actuated from main turbine stop valve position switches.
8.49	Turbine stop valves closed and main turbine bypass valves start to open.
8.58	Recirculation pump motor circuit breakers open causing decrease in core flow to natural circulation.

Table 15.1-2

Sequence of Events for Figure 15.1-2

Pressure Regulator Failure - Open Uprated Power

Time (sec)	Event
0	Simulate maximum limit on steam flow, (130%) to main turbine.
0.2[a]	Main turbine bypass valves open.
3.31	Vessel water level (L8) trip initiates turbine and feedwater trips.
3.32	Main turbine stop valves reach 90% open position initiating a reactor scram.
3.50	Both recirculation pumps trip.
6.15	Feedwater recirculation valves trip.
6.95	Group 3 relief valves actuated.
7.40	Group 4 relief valves actuated.
10[a]	Pressure relief valves closed.
57.98	Main steam line isolation valves closed on turbine inlet pressure (795 psig).
77	High-pressure core spray and RCIC system initiation on low level (L2).

[a] Approximately.

Table 15.1-3

Sequence of Events for Inadvertent
Safety/Relief Valve Opening

Uprated Power

Time	Event
0	Initiate opening of one SRV which remains open throughout the event.
1[a]	Reactor dome pressure decreases.
3[a]	DEH turbine control system pressure regulator initiates closure of the turbine control (governor) valves to stabilize reactor vessel pressure.
8+	Reactor power settles near the initial power level.

[a] Approximately.

Table 15.1-4

Sequence of Events for Inadvertent
Residual Heat Removal Shutdown Cooling Operation

Original Rated Power

Time[a]	Event
0	Residual heat removal shutdown cooling inadvertently activated.
0-10 minutes	Slow rise in reactor power.
+10 minutes	Operator may take action to limit power rise. Flux scram will occur if no action is taken.

[a] Approximately.

FWCF
ICF_BNE0-EIS

KK1
24

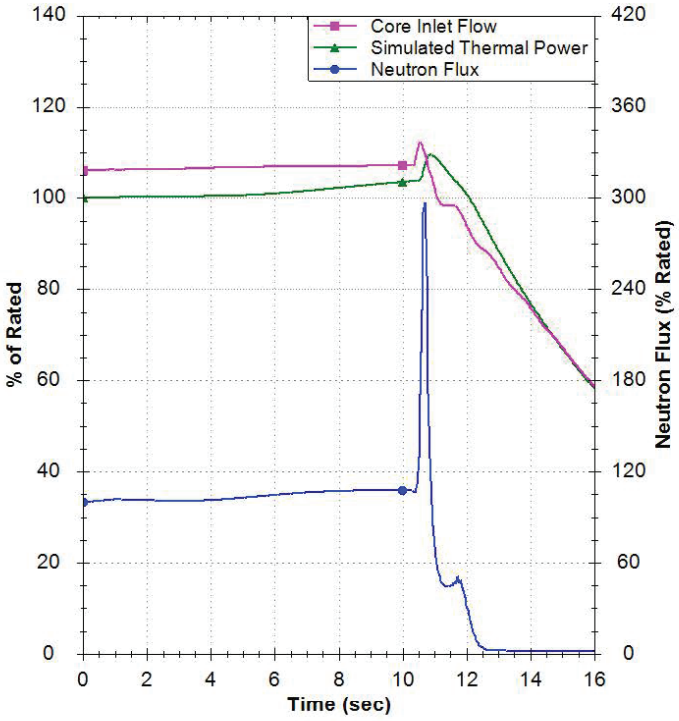

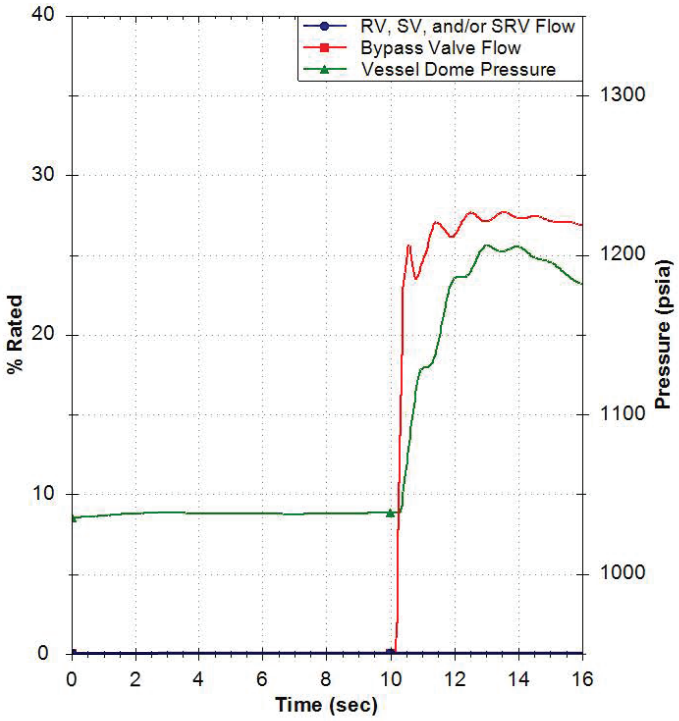

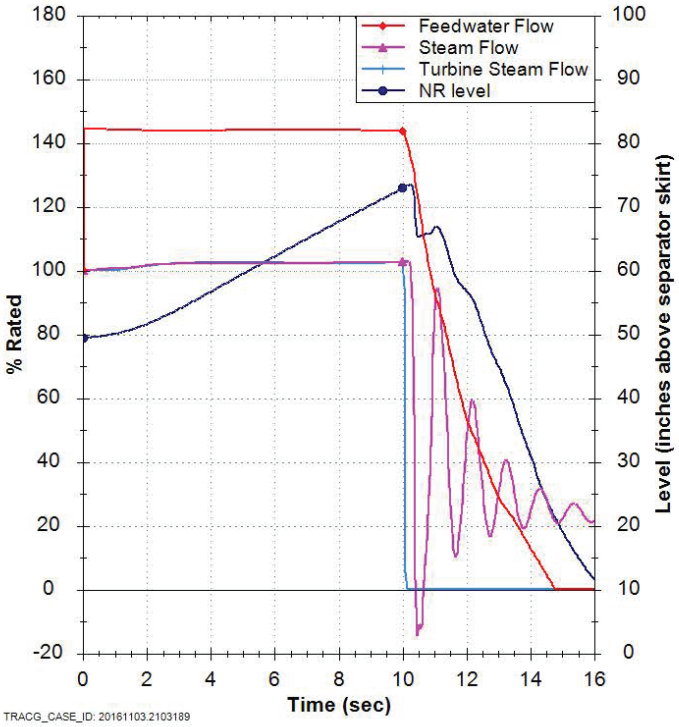

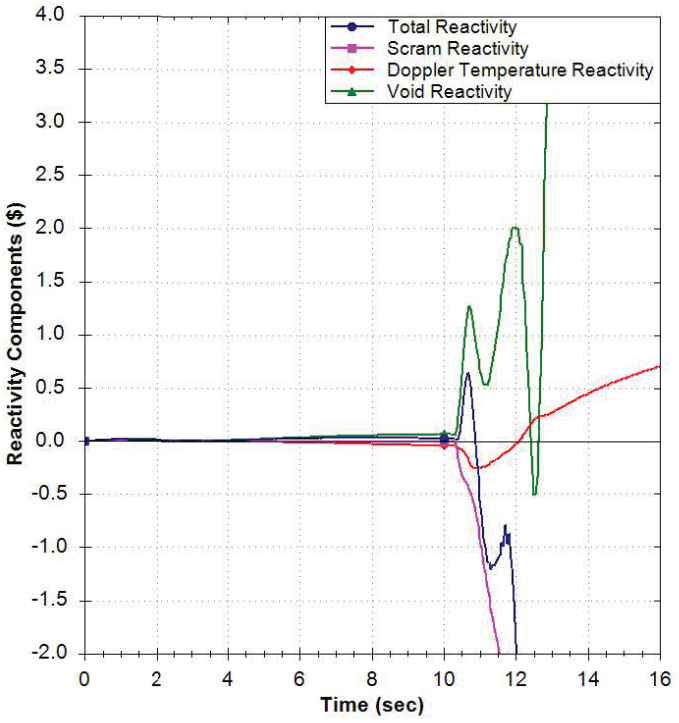

Columbia Generating Station Final Safety Analysis Report	Feedwater Controller Failure, Maximum Demand System Response 100% Power, 106% Flow		
	Draw. No. 910402.34	Rev. 2	Figure 15.1-1

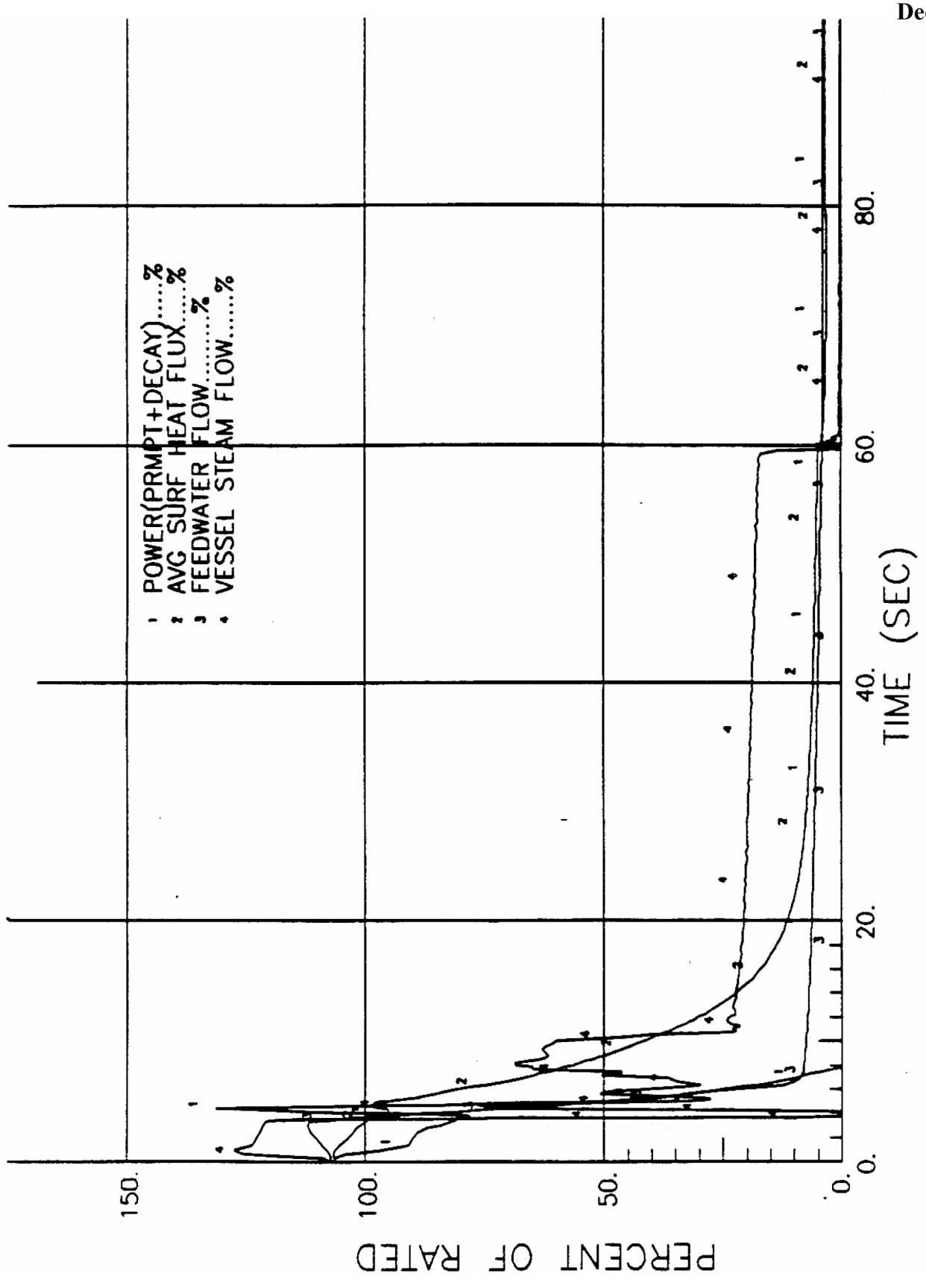

*% Uprated power (RTP) is based on 3544 MWt. Curves as shown are originally based on 3486 MWt.

Columbia Generating Station Final Safety Analysis Report	Pressure Regulator Failure - Open at 104.5*% Uprated Power, 100% Flow		
	Draw. No. 020361.57	Rev.	Figure 15.1-2.1

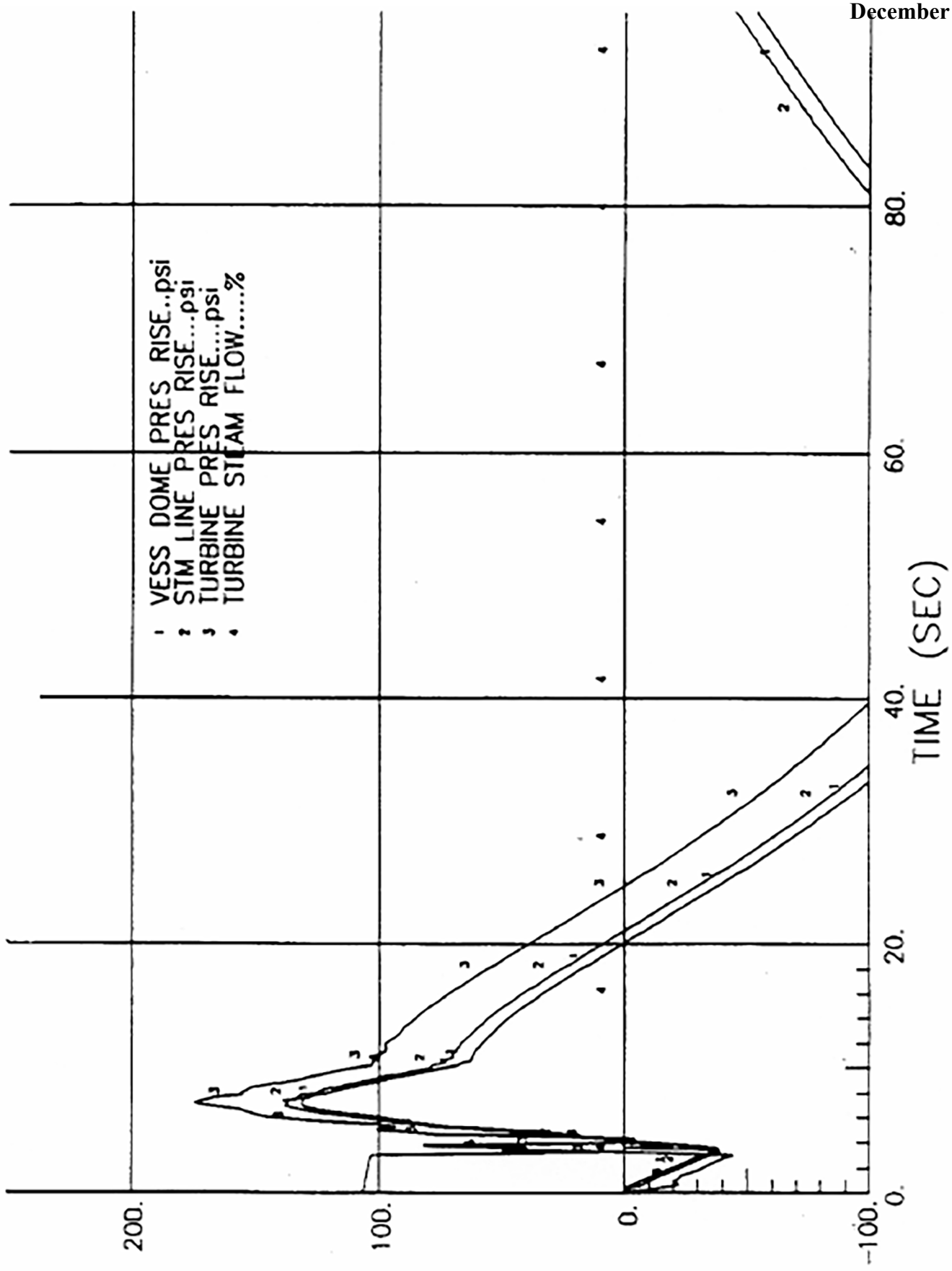

*% Uprated power (RTP) is based on 3544 MWt. Curves as shown are originally based on 3486 MWt.

Columbia Generating Station
Final Safety Analysis Report

Pressure Regulator Failure - Open at 104.5*% Uprated Power, 100% Flow

Draw. No. 020361.58	Rev.	Figure 15.1-2.2

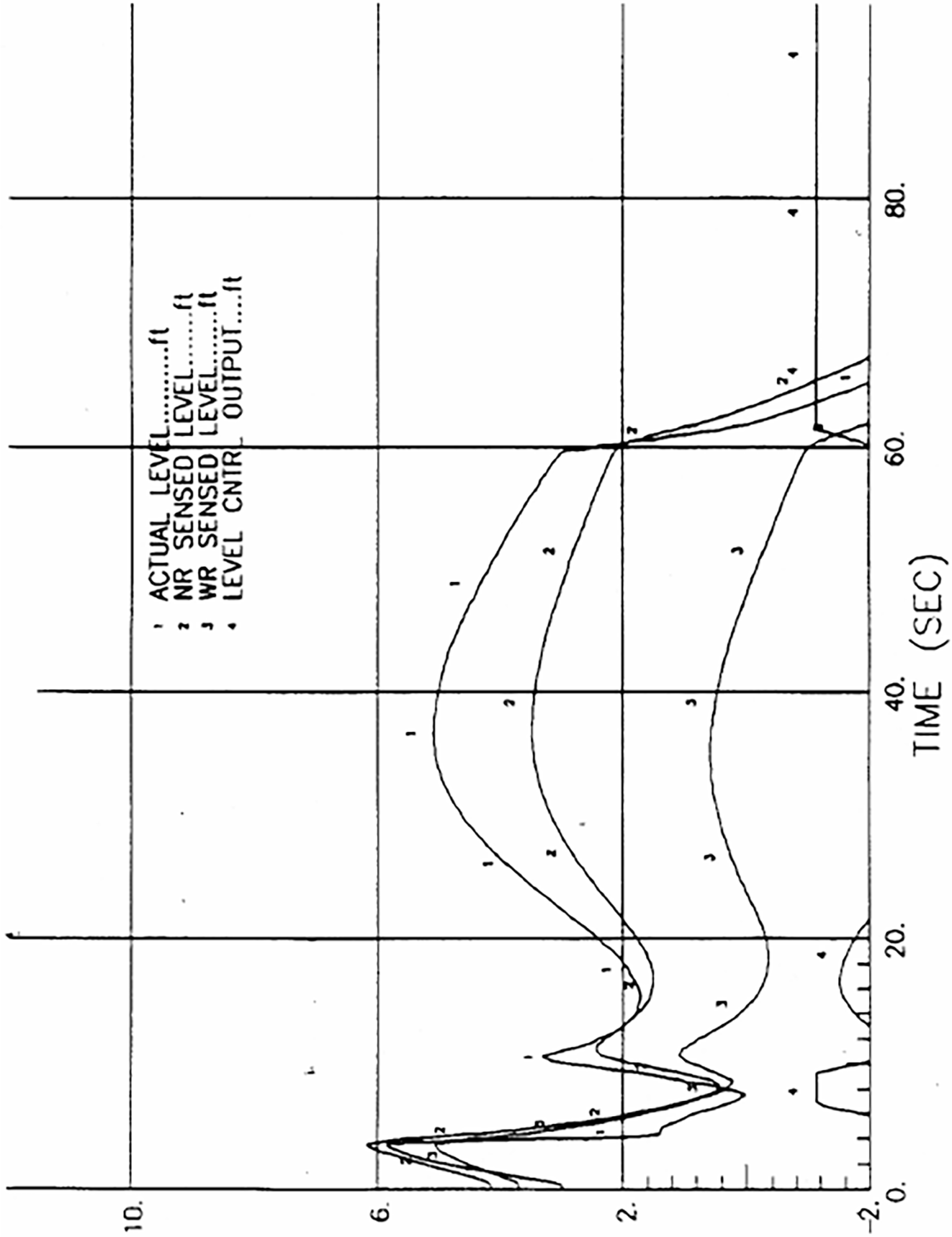

*% Uprated power (RTP) is based on 3544 MWt. Curves as shown are originally based on 3486.MWt.

Columbia Generating Station Final Safety Analysis Report	**Pressure Regulator Failure - Open at 104.5*% Uprated Power, 100% Flow**		
	Draw. No. 020361.59	Rev.	Figure 15.1-2.3

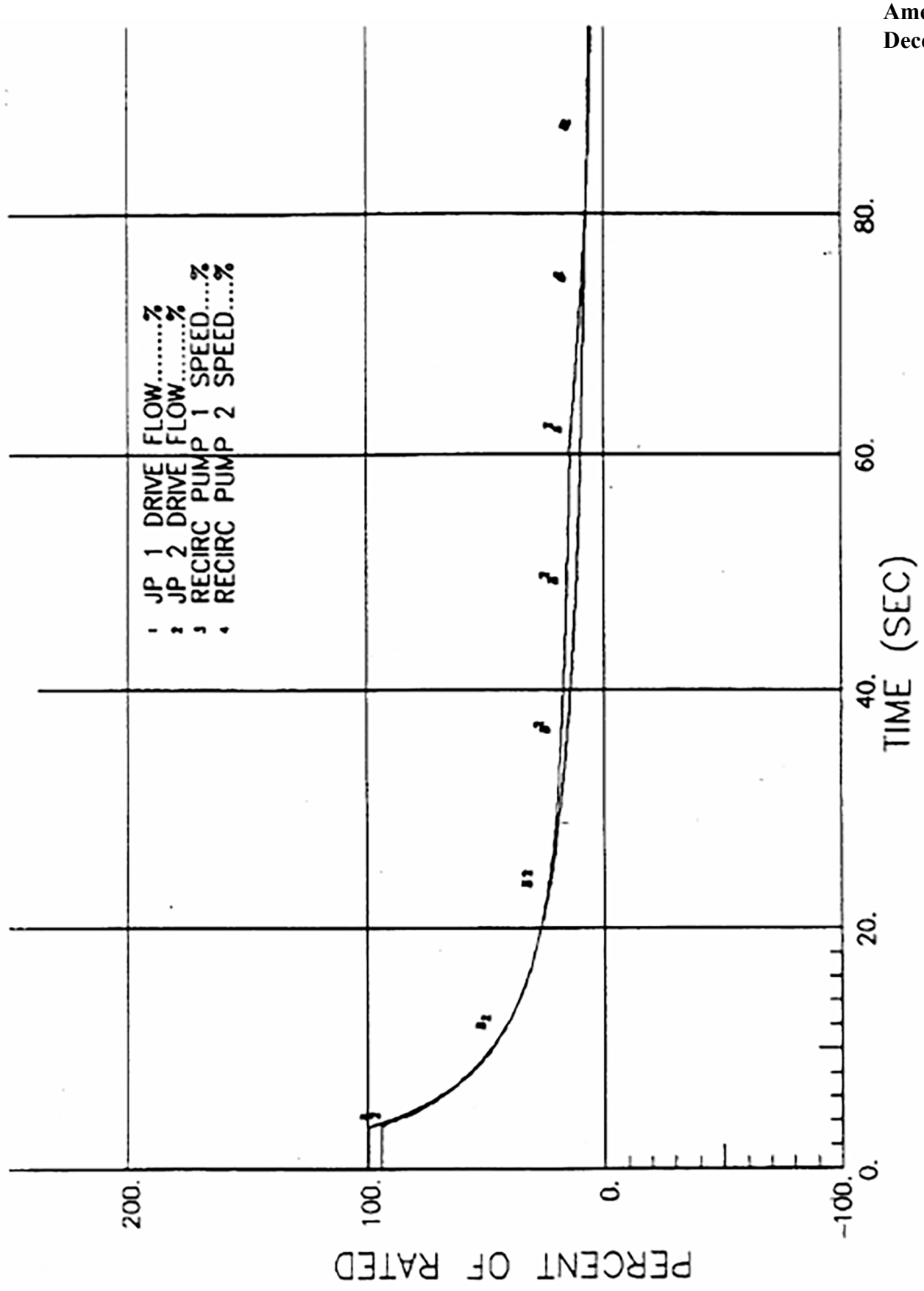

*% Uprated power (RTP) is based on 3544 MWt. Curves as shown are originally based on 3486 MWt.

Columbia Generating Station Final Safety Analysis Report	**Pressure Regulator Failure - Open at 104.5*% Uprated Power, 100% Flow**		
	Draw. No. 020361.60	Rev.	Figure 15.1-2.4

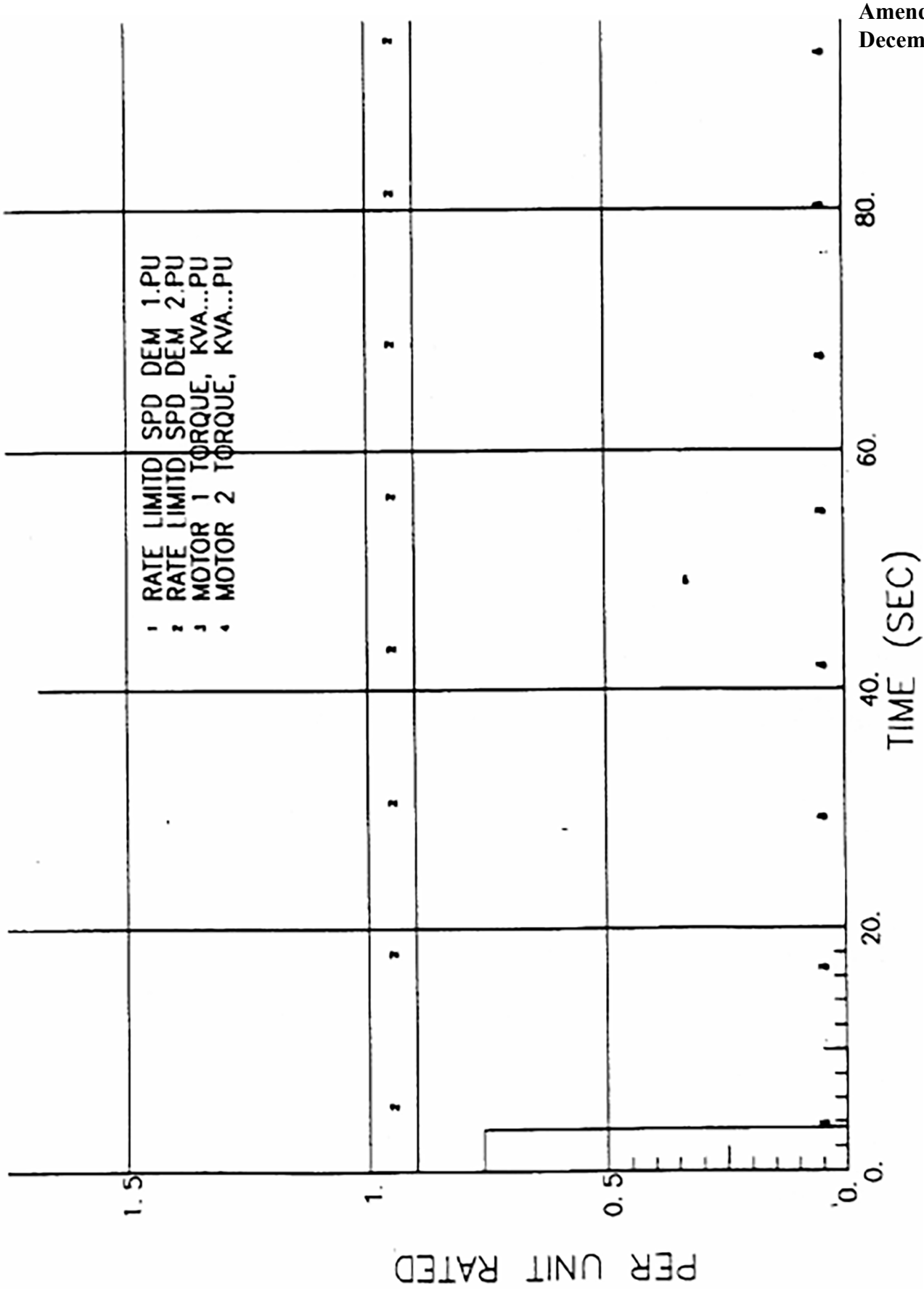

*% Uprated power (RTP) is based on 3544 MWt. Curves as shown are originally based on 3486 MWt.

Columbia Generating Station Final Safety Analysis Report	**Pressure Regulator Failure - Open at 104.5*% Uprated Power, 100% Flow**		
	Draw. No. 020361.61	Rev.	Figure 15.1-2.5

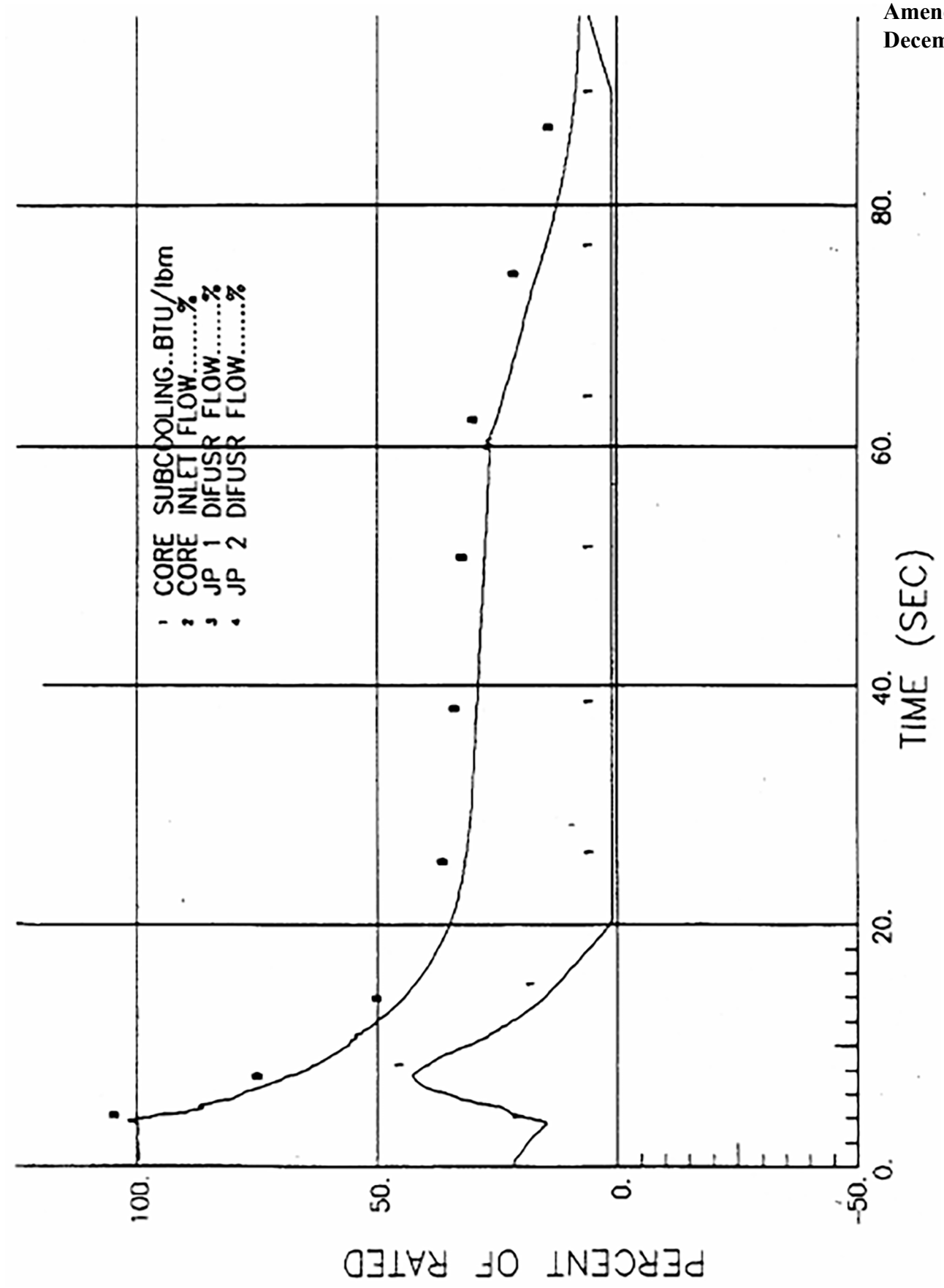

*% Uprated power (RTP) is based on 3544 MWt. Curves as shown are originally based on 3486 MWt.

Columbia Generating Station Final Safety Analysis Report	**Pressure Regulator Failure - Open at 104.5*% Uprated Power, 100% Flow**		
	Draw. No. 020361.62	Rev.	Figure 15.1-2.6

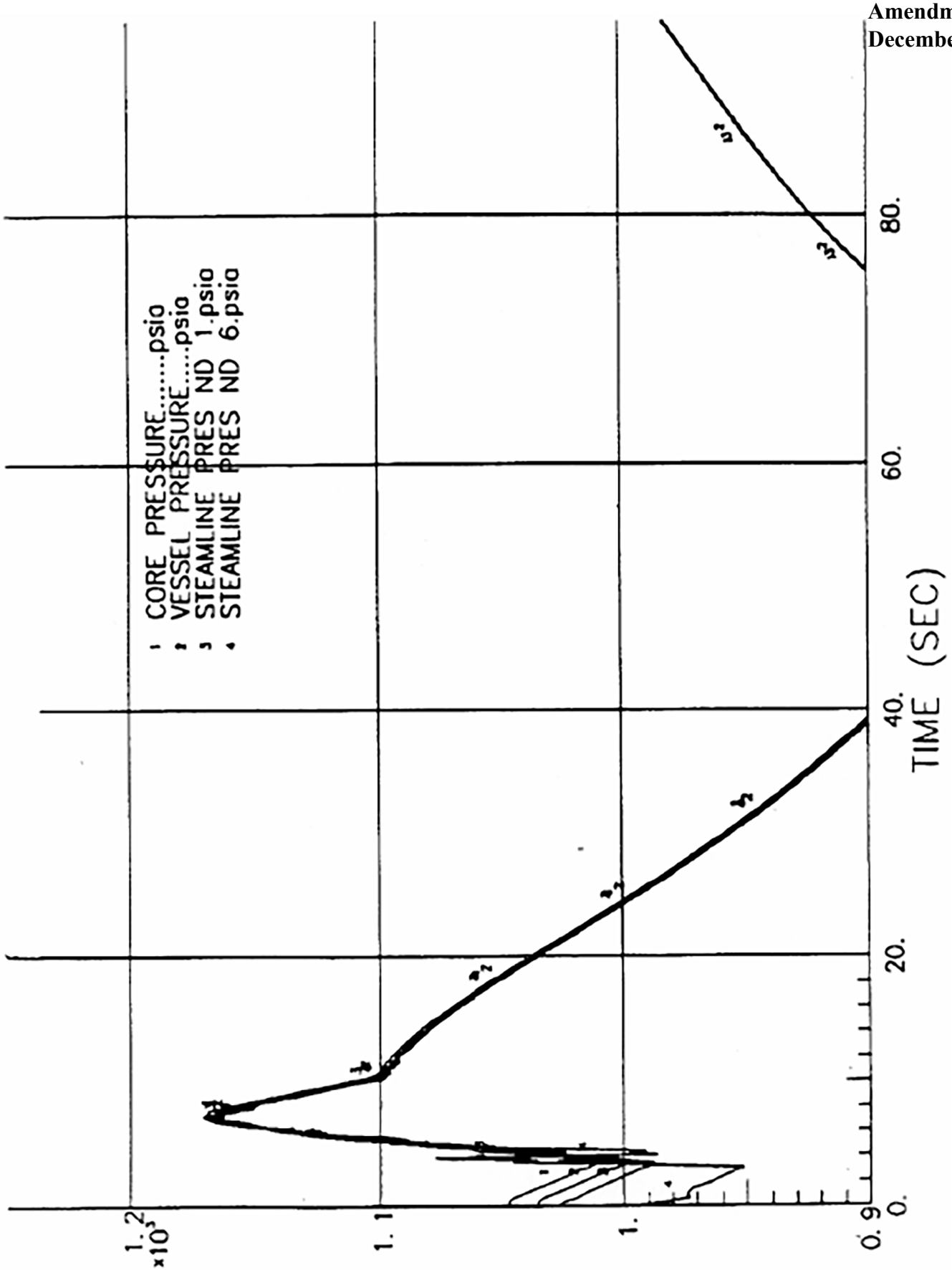

*% Uprated power (RTP) is based on 3544 MWt. Curves as shown are originally based on 3486 MWt.

Columbia Generating Station **Final Safety Analysis Report**	**Pressure Regulator Failure - Open at 104.5*% Uprated Power, 100% Flow**		
	Draw. No. 020361.63	Rev.	Figure 15.1-2.7

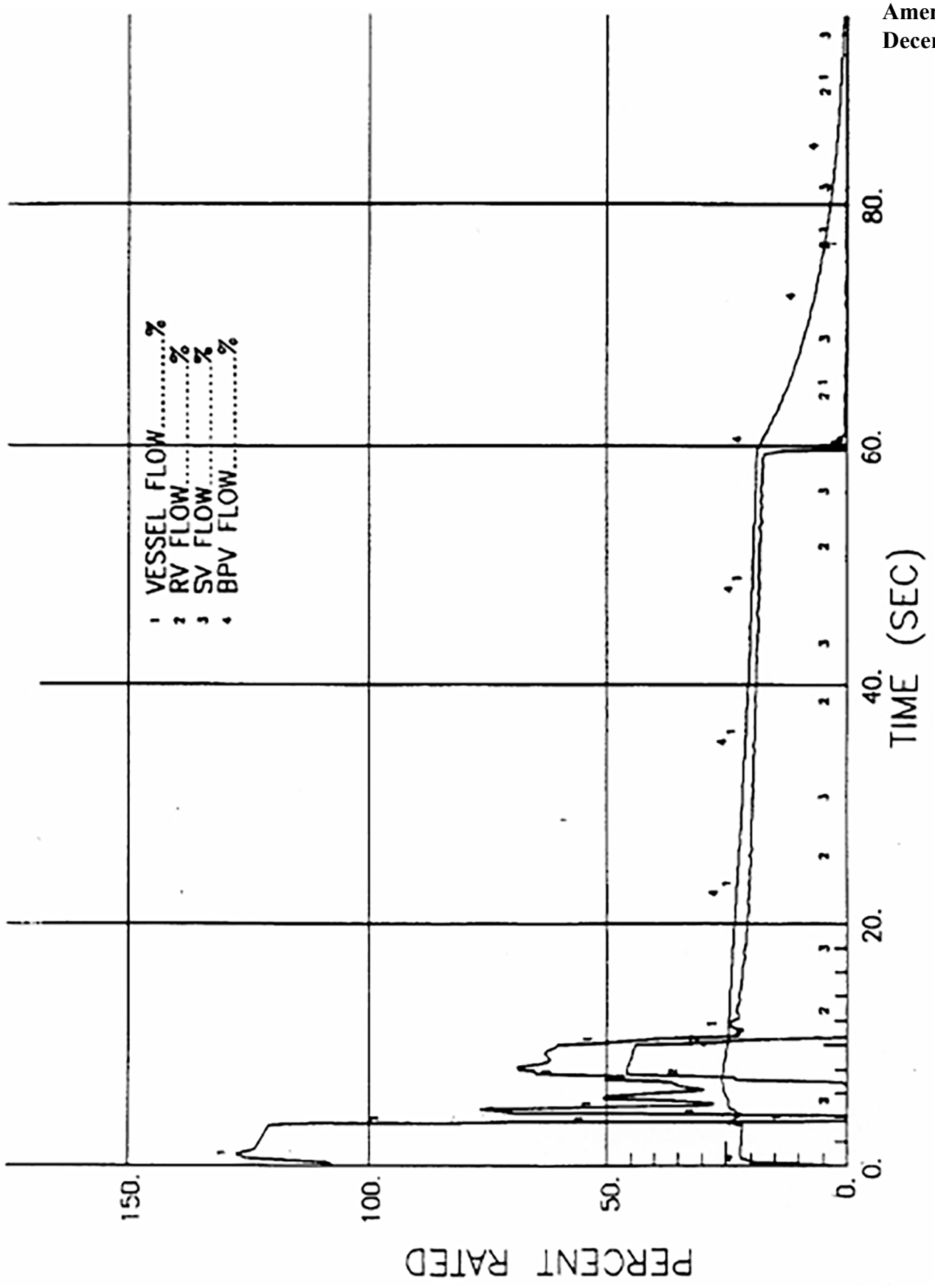

*% Uprated power (RTP) is based on 3544 MWt. Curves as shown are originally based on 3486 MWt.

Columbia Generating Station Final Safety Analysis Report	Pressure Regulator Failure - Open at 104.5*% Uprated Power, 100% Flow		
	Draw. No. 020361.64	Rev.	Figure 15.1-2.8

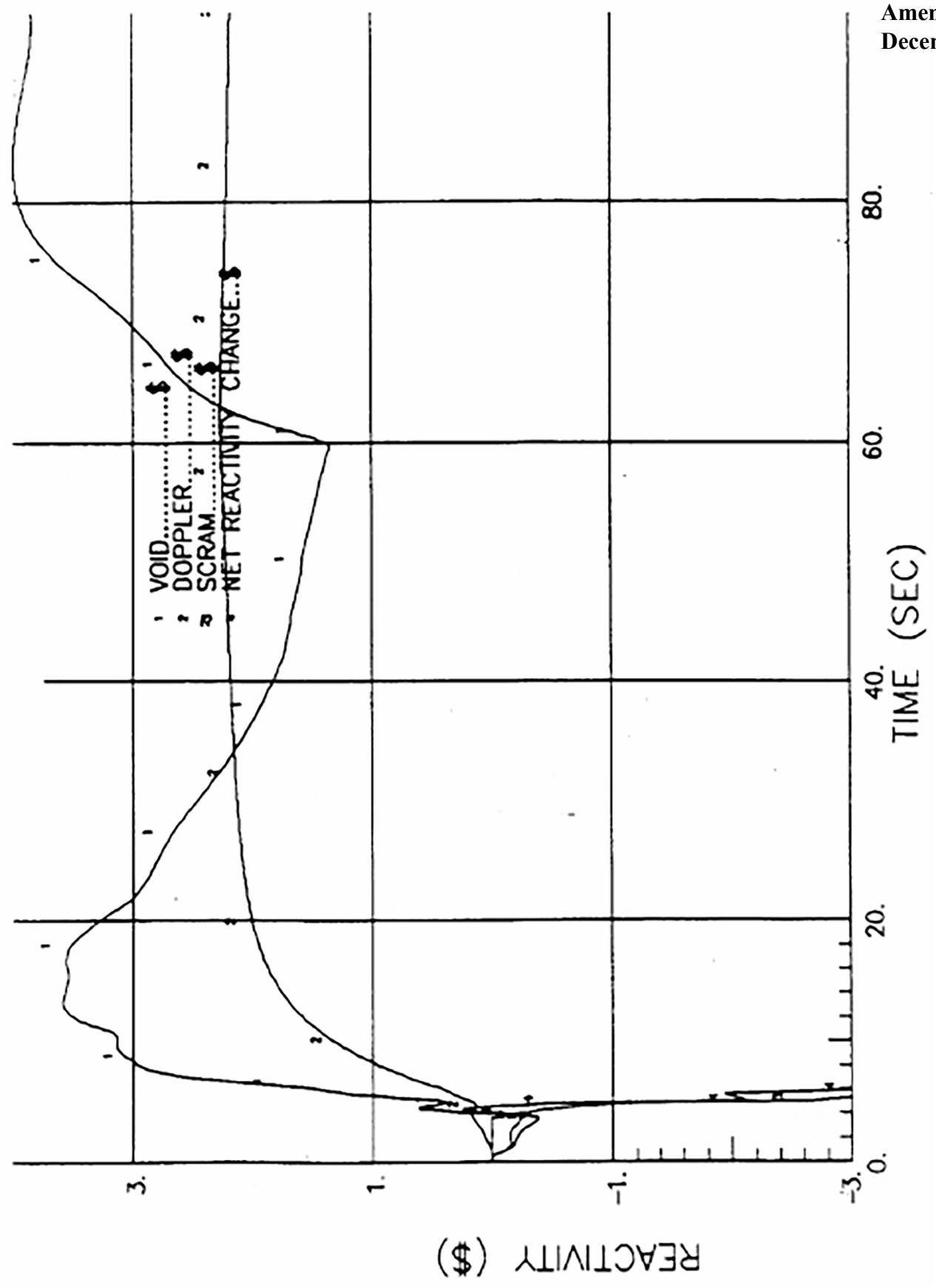

*% Uprated power (RTP) is based on 3544 MWt. Curves as shown are originally based on 3486 MWt.

Columbia Generating Station Final Safety Analysis Report	Pressure Regulator Failure - Open at 104.5*% Uprated Power, 100% Flow		
	Draw. No. 020361.65	Rev.	Figure 15.1-2.9

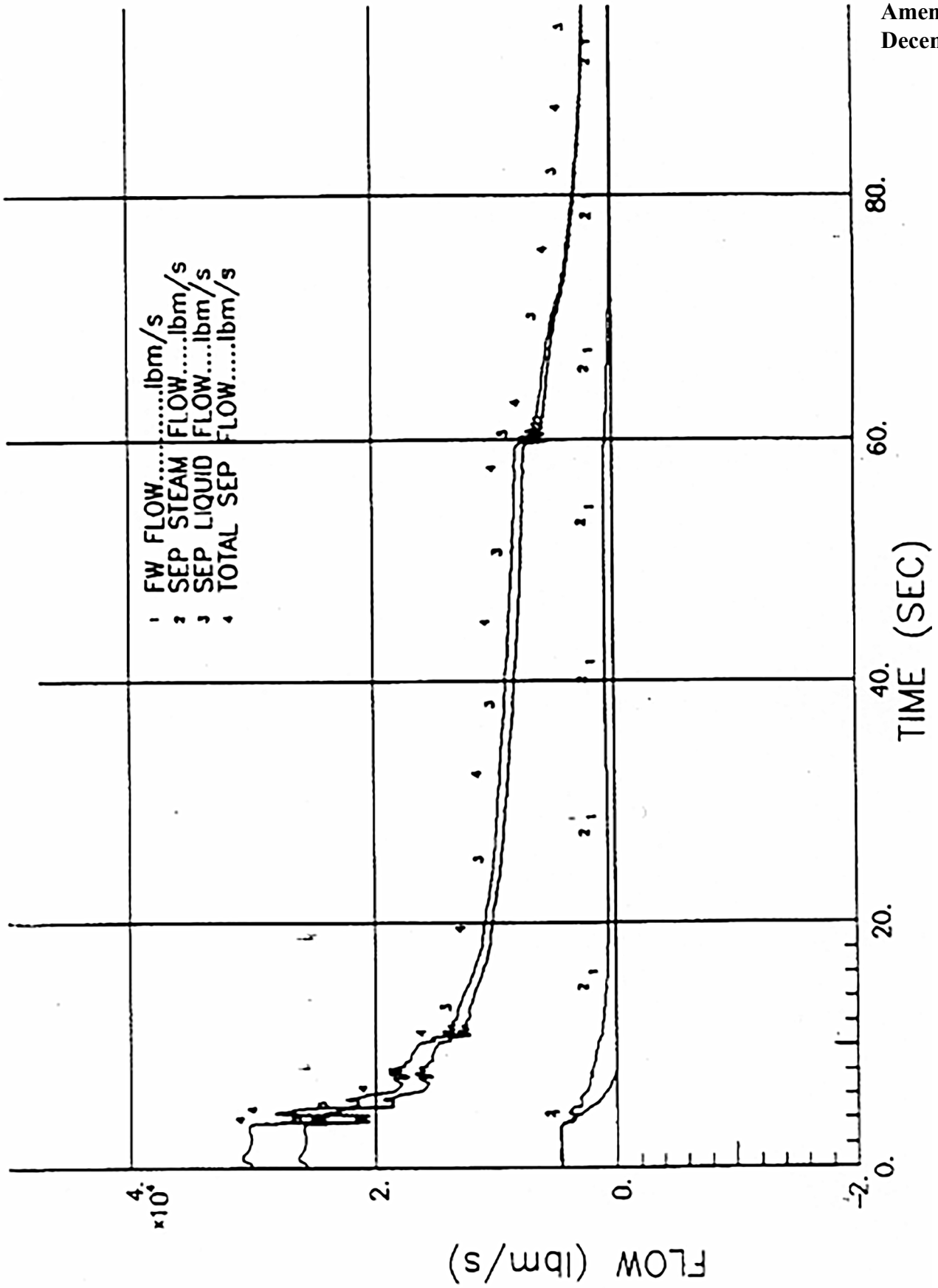

*% Uprated power (RTP) is based on 3544 MWt. Curves as shown are originally based on 3486 MWt.

Columbia Generating Station Final Safety Analysis Report	Pressure Regulator Failure - Open at 104.5*% Uprated Power, 100% Flow		
	Draw. No. 020361.66	Rev.	Figure 15.1-2.10

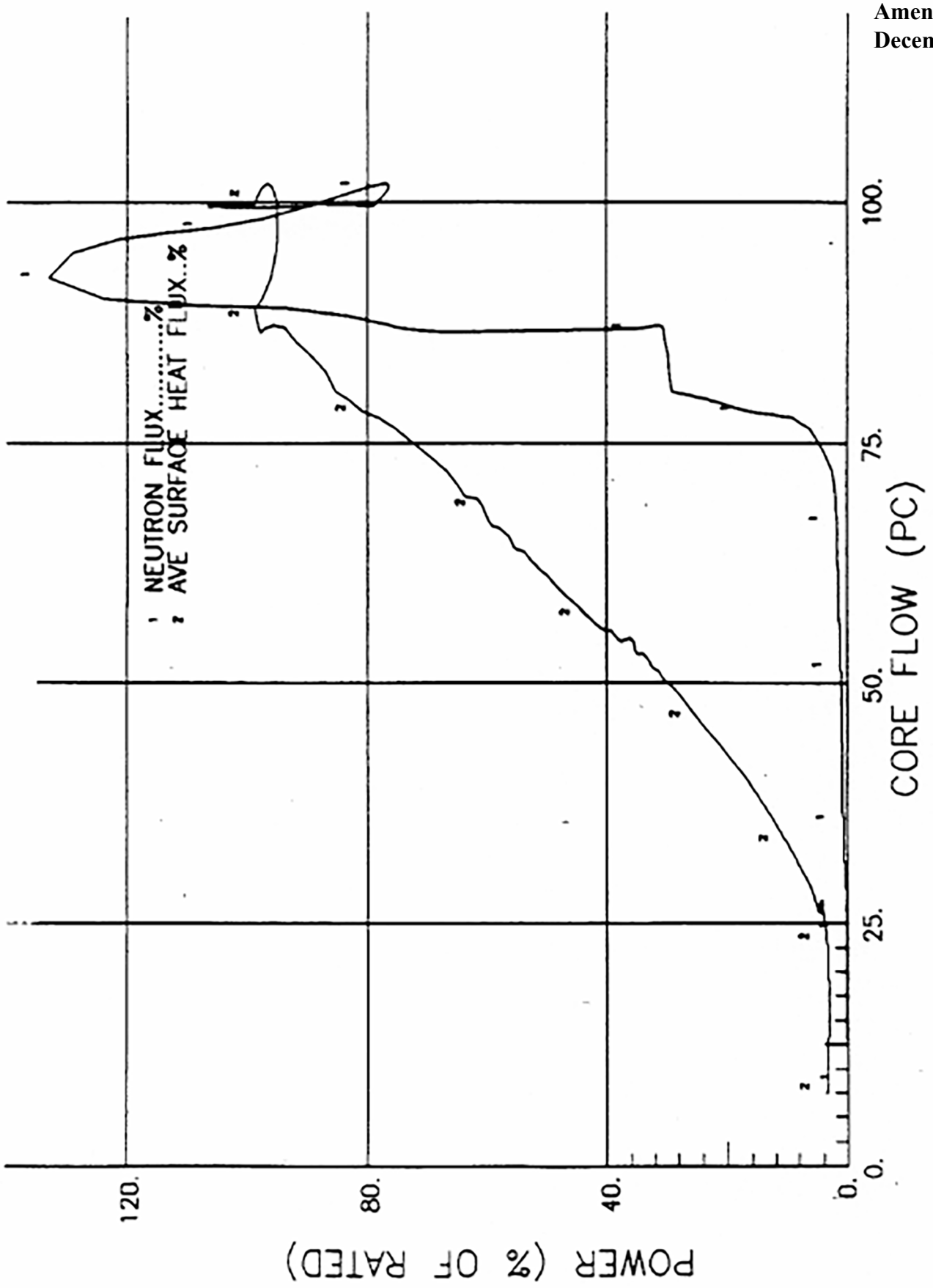

*% Uprated power (RTP) is based on 3544 MWt. Curves as shown are originally based on 3486 MWt.

Columbia Generating Station Final Safety Analysis Report	**Pressure Regulator Failure - Open at 104.5*% Uprated Power, 100% Flow**		
	Draw. No. 020361.67	Rev.	Figure 15.1-2.11

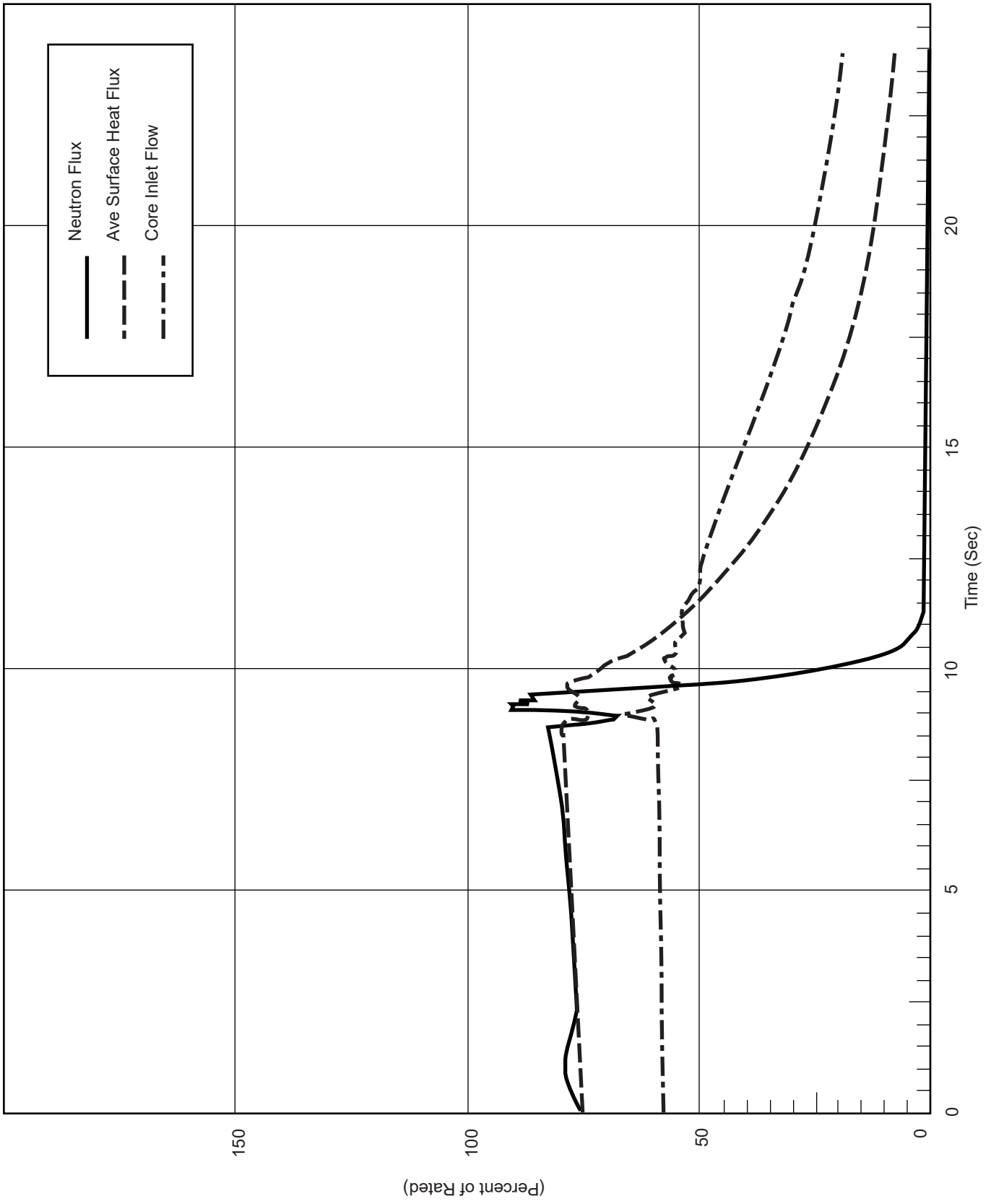

*% Uprated power (RTP) is based on 3544 MWt. Curves as shown are originally based on 3486 MWt.

Columbia Generating Station Final Safety Analysis Report	Feedwater Controller Failure, Maximum Demand, EOC RPT OOS, Single Loop Operation and 73.8*% Uprated Power, 57% Flow		
	Draw. No. 910402.41	Rev.	Figure 15.1-3.1

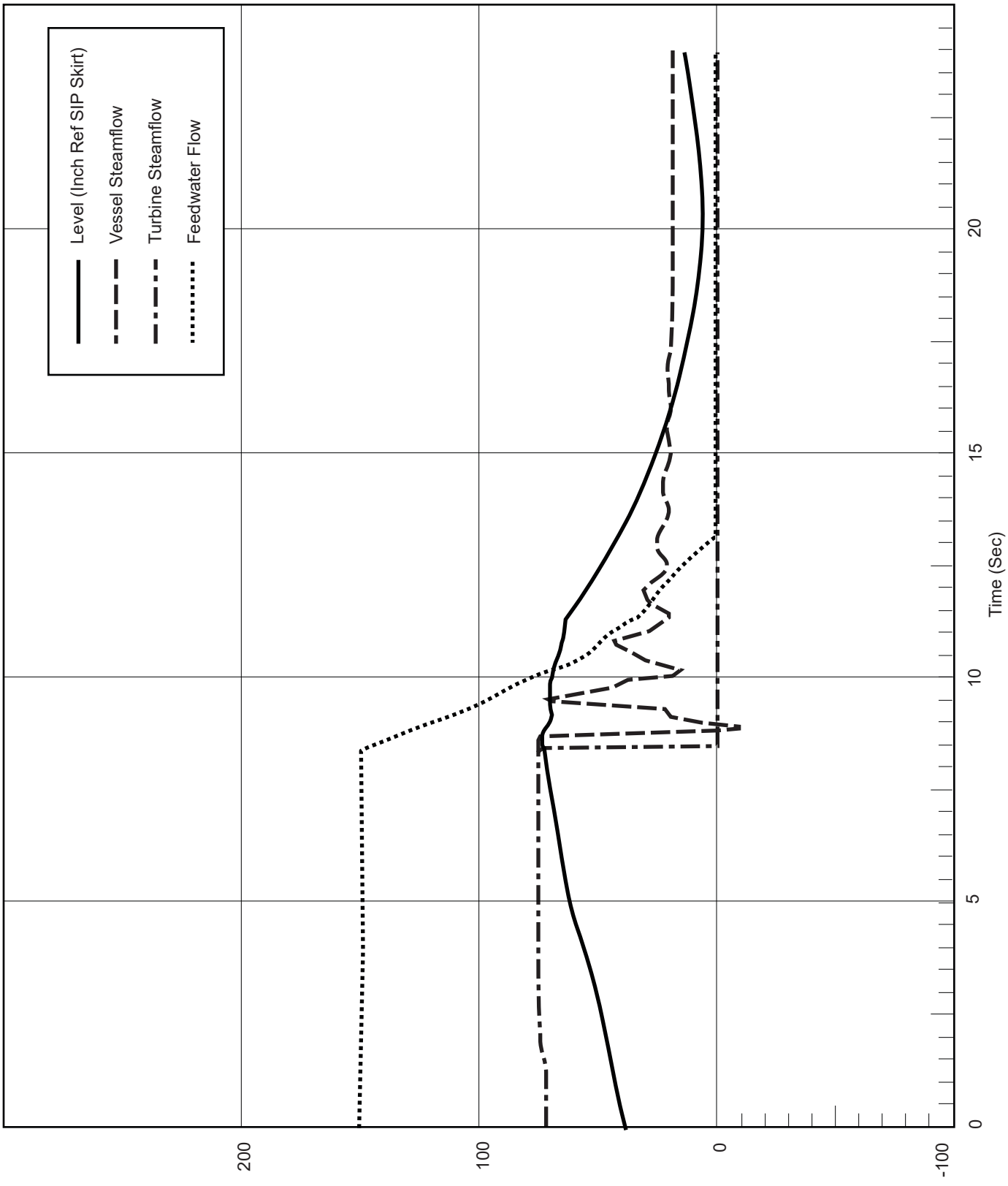

*% Uprated power (RTP) is based on 3544 MWt. Curves as shown are originally based on 3486 MWt.

Columbia Generating Station
Final Safety Analysis Report

Feedwater Controller Failure, Maximum Demand, EOC RPT OOS, Single Loop Operation and 73.8*%Uprated Power, 57% Flow

Draw. No. 910402.40	Rev.	Figure 15.1-3.2

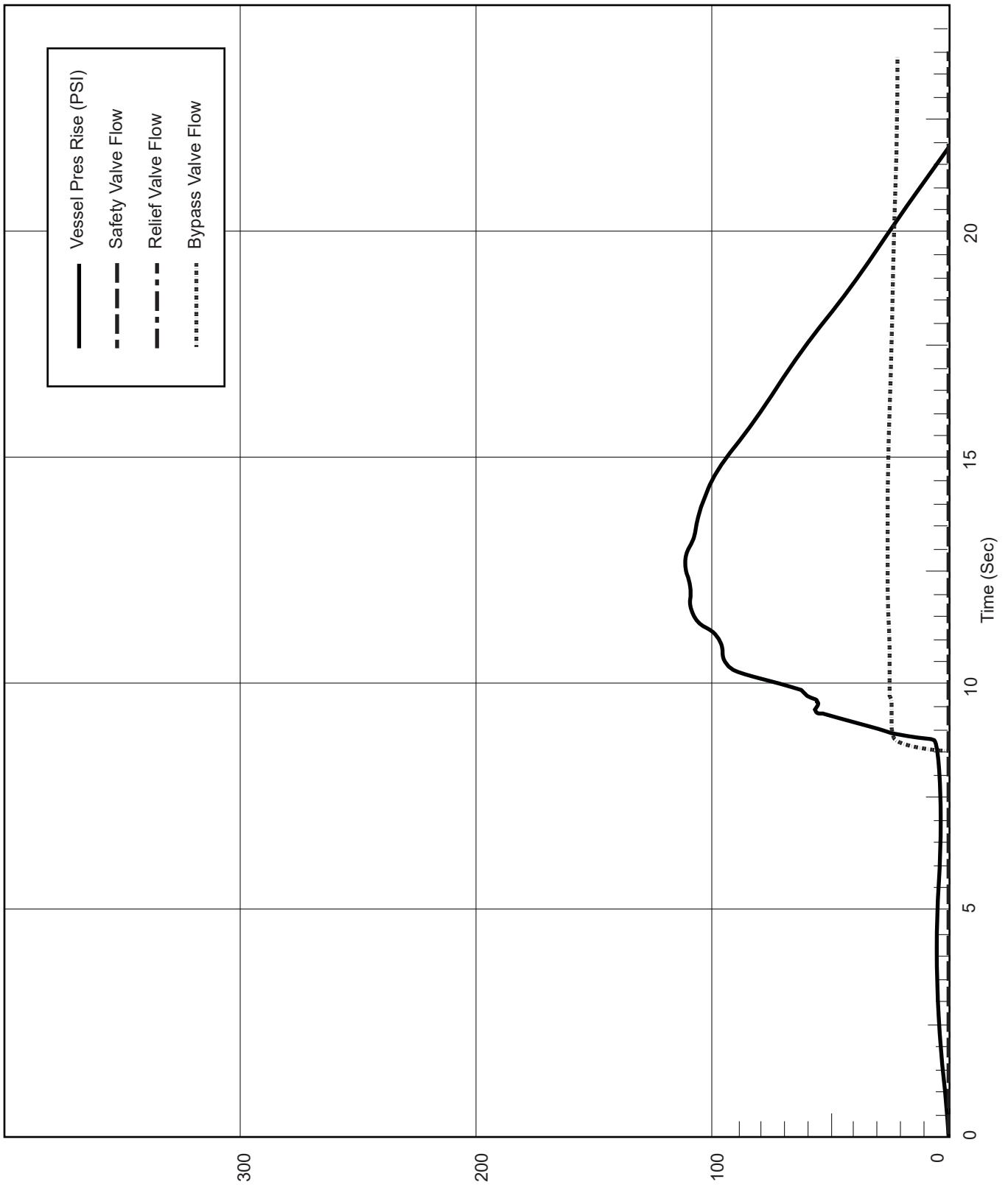

*% Uprated power (RTP) is based on 3544 MWt. Curves as shown are originally based on 3486 MWt.

Columbia Generating Station Final Safety Analysis Report	Feedwater Controller Failure, Maximum Demand, EOC RPT OOS, Single Loop Operation and 73.8*% Uprated Power, 57% Flow		
	Draw. No. 910402.39	Rev.	Figure 15.1-3.3

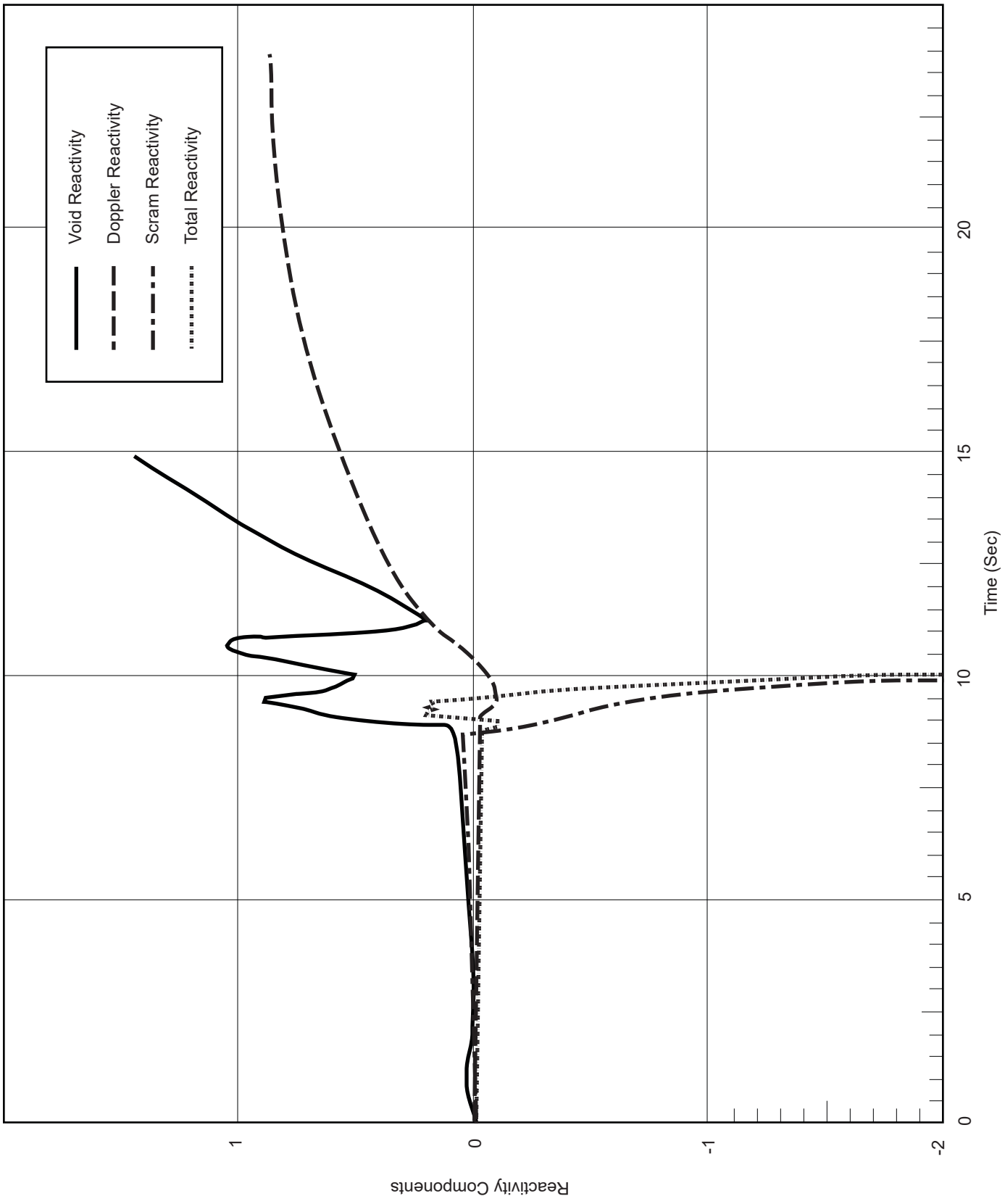

*% Uprated power (RTP) is based on 3544 MWt. Curves as shown are originally based on 3486 MWt.

Columbia Generating Station **Final Safety Analysis Report**	**Feedwater Controller Failure, Maximum Demand, EOC RPT OOS, Single Loop Operation and 73.8*% Uprated Power, 57% Flow**
	Draw. No. **910402.38** | Rev. | Figure **15.1-3.4**

15.2 INCREASE IN REACTOR PRESSURE

15.2.1 PRESSURE REGULATOR FAILURE - CLOSED

This transient is classified as a nonlimiting event for both original and uprated power conditions. Therefore, cycle specific analyses are not performed for this event. The analysis results presented in the section are based on uprated power conditions and a representative reload core (Cycle 8) as documented in Reference 15.2-5.

15.2.1.1 Identification of Causes and Frequency Classification

15.2.1.1.1 Identification of Causes

A triple redundant control system is provided to maintain primary system pressure control. The pressure upstream of the main turbine stop (throttle) valves is sensed by three redundant throttle pressure transmitters and the control system uses a median select logic to determine which pressure transmitter is used to control throttle pressure. The pressure control system compares the detected throttle pressure to a pressure setpoint to control the position of the main turbine control (governor) valves in order to control pressure.

It is assumed for purposes of this transient analysis that a single failure occurs on the controlling pressure transmitter which erroneously causes the DEH control system to close the turbine control (governor) valves and thereby increases reactor pressure. If this occurs, the self diagnostics ability and triple redundant control system is available.

15.2.1.1.2 Frequency Classification

This event is categorized as an incident of moderate frequency.

15.2.1.2 Sequence of Events and Systems Operation

15.2.1.2.1 Sequence of Events

A failure of a DEH control system component that causes the turbine control (governor) valves or turbine bypass valves to move towards the closed position will momentarily result in an initial pressure increase because the reactor is still generating the initial steam flow. The DEH control system is self diagnostic. It will detect the faulty component and disable it. The control system is redundant and will continue to perform its functions, and will restore steady state operation.

For a failure that causes the DEH turbine control pressure regulator to initiate a demand signal to close the turbine control (governor) valves (requires multiple component failures), there will be an increase in system pressure and reactor power. A scram will be initiated when the high

neutron flux scram setpoint is reached. The pressure rises to the pressure relief setpoint, part of the relief valves open, discharging steam to the suppression pool. The plant response is given in Table 15.2-1.

15.2.1.2.2 Systems Operation

Normal plant instrumentation and control is assumed to function except for the pressure regulator failure. The event is analyzed from 102.4% uprated power and 106% of rated core flow. The event results in a high flux trip initiated by the reactor protection system.

15.2.1.2.3 The Effect of Single Failures and Operator Errors

The first assumed failure produces a slight pressure increase in the reactor until the DEH control system adjusts to the single failure and gains control. No other action is significant in restoring normal operation. If subsequent failures occur such that the DEH control system further closes the turbine control (governor) valves the reactor pressure could rise to the point where a flux or pressure scram trip would be initiated to shutdown the reactor. This event is less severe than the turbine trip for the following reasons:

a. For the DEH control system failure-closure event the reactor scrams on high neutron flux or pressure but the recirculation pumps do not trip. As a result, core flow remains at 100% or greater throughout the critical portion of the transient with respect to the critical power ratio (CPR). This provides improved heat transfer capability in relation to the turbine trip transient; and

b. Since the turbine control (governor) valves close in response to a pressure error signal, their closure rate is not as fast as the turbine stop (throttle) or control (governor) valve response to a trip signal. This produces a slower pressurization rate for the DEH control system failure relative to the turbine trip event. This in turn results in a lower peak neutron flux and therefore a lower peak surface heat flux than the turbine trip event.

15.2.1.3 Core and System Performance

15.2.1.3.1 Mathematical Model

The one-dimensional ODYN model described in Section 15.0.3.3.1 is used to simulate this event.

15.2.1.3.2 Input Parameters and Initial Conditions

The analyses have been performed with plant conditions at 102.4% of uprated power and 106% of rated core flow. The input parameters are given in detail in Table 15.0-2 under the ODYN column.

15.2.1.3.3 Results

The closure of the turbine governor (control) valves results in a rise in reactor pressure, collapsing the coolant voids which in turn increases the neutron flux. One sec after the initiation of the event the neutron flux increases to the high flux setpoint signal and initiates a reactor scram. Two sec into the event the pressure in the reactor reaches the ATWS high pressure trip setpoint, initiating a recirculation pump trip signal. As the pressure in the reactor system continues to rise, the relief valves begin to open starting with Group 3. The maximum pressure is reached at 3.25 sec and is calculated to be 1220 psig at the bottom of the reactor vessel. Table 15.2-1 provides the sequence of events and Figure 15.2-1 depicts the plant parameters responses. Key transient peak values are presented in Table 15.0-1. This event is nonlimiting in that the pressurization event is less severe than the Generator Load Rejection with Bypass Failure and Turbine Trip with Bypass Failure events.

15.2.1.3.4 Consideration of Uncertainties

The uncertainties included in the initial power and flow considerations maximize the consequences of the plant response. The independent pressure regulators normally respond such that failure of one would be compensated by the other regulator with plant not experiencing a trip.

15.2.1.4 Barrier Performance

The consequences of this event do not result in any temperature or pressure transient (see Table 15.0-1) in excess of the criteria for which the fuel, pressure vessel, or containment are designed. Therefore, barrier integrity and function is maintained.

15.2.1.5 Radiological Consequences

Since this event does not result in any fuel failures or any release of primary coolant to either the secondary containment or to the environment, there are no radiological consequences associated with this event.

15.2.2 GENERATOR LOAD REJECTION

15.2.2.1 Identification of Causes and Frequency Classification

15.2.2.1.1 Identification of Causes

Fast closure of the turbine control (governor) valves (TCVs) is initiated whenever electrical grid disturbances occur which result in significant loss of electrical load on the generator. The TCVs are required to close as rapidly as possible to prevent excessive overspeed of the turbine-generator rotor. Closure of the main TCVs will cause a sudden reduction in steam flow which results in an increase in system pressure, which may cause a reactor shutdown due to a high flux or high steam pressure condition.

15.2.2.1.2 Frequency Classification

15.2.2.1.2.1 Generator Load Rejection. This event is categorized as an incident of moderate frequency.

15.2.2.1.2.2 Generator Load Rejection with Bypass Failure. This event is categorized as a moderate frequency event.

15.2.2.2 Sequence of Events and System Operation

The generator load rejection with bypass failure event is the most limiting (with respect to thermal margin) of the class of transients characterized by rapid vessel pressurization, including load rejection with the bypass valves operating. The generator load rejection causes a TCV (governor valve) fast closure, which initiates a reactor scram and a recirculation pump trip (RPT). The compression wave produced by the TCV fast closure travels through the steam lines into the vessel and pressurizes the reactor vessel and core. Bypass flow to the condenser, which would mitigate the pressurization effect, is conservatively not allowed. The excursion of core power due to void collapse is primarily terminated by reactor scram and void growth due to RPT. The recirculation pump speed remains constant until tripped by the RPT system.

Events caused by low water level trips, including closure of main steam line isolation valves (MSIVs), and initiation of high-pressure core spray (HPCS) and reactor core isolation cooling (RCIC) are not included in the simulation. Should these events occur, they will follow after the primary concerns of fuel thermal margin and overpressure effects have occurred, and are expected to be less severe than those already experienced by the system.

15.2.2.2.1 Sequence of Events

15.2.2.2.1.1 Generator Load Rejection - Turbine Control Valve Fast Closure. This transient is classified as a nonlimiting event for both original and uprated power conditions. Therefore, the original rated power (3323 MWt) analysis has not been updated.

A loss of generator electrical load from high power conditions produces the sequence of events listed in Table 15.2-2.

15.2.2.2.1.2 Generator Load Rejection with Failure of Bypass. A loss of generator electrical load at 3544 MWt with bypass failure produces the sequence of events listed in Table 15.2-3.

15.2.2.2.2 System Operation

15.2.2.2.2.1 Generator Load Rejection with Bypass. To properly simulate the expected sequence of events, the analysis of this event assumes normal functioning of plant instrumentation and controls, plant protection, reactor pressure vessel (RPV) safety/relief valves (SRV), and reactor protection systems (RPS) unless stated otherwise. The bypass valve opening characteristics reflect the specified delay together with the specified opening characteristic required for bypass system operation.

Turbine control valve fast closure initiates a scram trip signal for power levels greater than 29.5% nuclear boiler rated (NBR). In addition, recirculation pump trip (RPT) is initiated. Both of these trip signals satisfy single failure criterion and credit is taken for these protection features.

The pressure relief system, which operates the SRVs independently when system pressure exceeds relief valve instrumentation setpoints is assumed to function normally during the time period analyzed.

15.2.2.2.2.2 Generator Load Rejection with Failure of Bypass. Same as Section 15.2.2.2.2.1 except that failure of the main turbine bypass valves is assumed for the entire transient. In addition, the pressure relief system, which operates the SRVs independently when system pressure exceeds relief valve instrumentation setpoints, fails to operate. Pressure relief is provided by the safety function of the SRVs.

15.2.2.2.3 The Effect of Single Failures and Operator Errors

Mitigation of pressure increase, the basic nature of this transient, is accomplished by the RPS functions. Turbine control valve trip scram and RPT are designed to satisfy the single failure criterion. An evaluation of the most limiting single failure (i.e., failure of the bypass system) was considered in this event.

15.2.2.3 Core and System Performance

15.2.2.3.1 Mathematical Model

15.2.2.3.1.1 Generator Load Rejection with Bypass. The predicted dynamic behavior for the generator load reject with bypass valves operable has been determined using a computer simulated, analytical model of a generic direct-cycle BWR. This model is described in detail in Reference 15.2-4.

The nonlinear computer simulated analytical model is designed to predict associated transient behavior of the reactor. Some of the significant features of the model are the following:

a. A point kinetic model is assumed with reactivity feedbacks from control rods (absorption), voids (moderation), and Doppler (capture) effects.

b. The fuel is represented by three four-node cylindrical elements, each enclosed in a cladding node. One of the cylindrical elements is used to represent core average power and fuel temperature conditions, providing the source of Doppler feedback. The other two are used to represent "hot spots" in the core, to simulate peak fuel center temperature and cladding temperature.

c. Four primary system pressure nodes are simulated. The nodes represent the core exit pressure, vessel dome pressure, steam line pressure (at a point representative of the safety/relief valve location), and turbine inlet pressure.

d. The active core void fraction is calculated from a relationship between core exit quality, inlet subcooling, and pressure. This relationship is generated from multimode core steady-state calculations. A second-order void dynamic model, with the void boiling sweep time calculated as a function of core flow and void conditions, is also utilized.

e. Principal controller functions such as feedwater flow, recirculation flow, reactor water level, pressure and load demand are represented together with their dominant nonlinear characteristics.

f. The ability to simulate necessary reactor protection system functions is provided.

15.2.2.3.1.2 Generator Load Rejection with Bypass Failure. The predicted dynamic behavior for the load rejection with bypass inoperable has been determined using a computer simulated, analytical model of a direct-cycle BWR that is discussed in Section 15.1.2.3.1. This model is described in detail in Reference 15.2-10.

15.2.2.3.2 Input Parameters and Initial Conditions

These analyses have been performed, unless otherwise noted, with the plant conditions tabulated in Table 15.0-2 for the load rejection with bypass and in Table 15.0-2B for load rejection with bypass failure.

The turbine digital electrohydraulic control system power/load imbalance device detects load rejection before a measurable speed change takes place.

The closure characteristics of the TCVs are assumed such that the valves operate in the full arc (FA) mode and have a full stroke closure time, from fully open to fully closed, of 0.15 sec. In FA mode, at 100% power, the TCVs are not fully open, so the analysis assumes a closure time that is a fraction of the full stroke time proportional to the TCV initial position.

15.2.2.3.3 Results

Analyses were performed to analyze combinations of RPT operable/inoperable and Option A and Option B scram speeds (Reference 15.2-3). The excursion of core power due to void collapse is primarily terminated by reactor scram and void growth due to RPT.

15.2.2.3.3.1 Generator Load Rejection with Bypass. Figure 15.2-2.1 shows the results of the generator trip from original rated power. Peak neutron flux rises 147% above NBR conditions.

The average surface heat flux peaks at 102.9% of the initial value and minimum critical power ratio (MCPR) does not significantly decrease below its initial value.

15.2.2.3.3.2 Generator Load Rejection with Failure of Bypass. Figure 15.2-2.2 shows that, for the case of bypass failure, peak neutron flux reaches about 325% power. Results reflect GNF2 fuel introduction, some of which are dependent on fuel design and core loading pattern. Compliance with the event acceptance criteria is demonstrated by cycle-dependent analysis of potentially limiting events just prior to the operation of that cycle. The results are reported in the Supplemental Reload Licensing Report (Reference 15.2-3). As discussed in Section 15.0.2.1, when this event is initiated during single loop operation, the consequences are less severe than the consequences analyzed for the two loop operation.

15.2.2.3.4 Consideration of Uncertainties

The full stroke closure time of the TCV of 0.15 sec is conservative. Typically, the actual closure time is closer to 0.2 sec. The less time it takes to close, the more severe the pressurization effect.

All systems used for protection in this event were assumed to have the poorest allowable response. Expected plant behavior is, therefore, expected to reduce the actual severity of the transient.

15.2.2.4 Barrier Performance

15.2.2.4.1 Generator Load Rejection

Peak pressure remains within normal operating range and no threat to the barrier exists.

15.2.2.4.2 Generator Load Rejection with Failure of Bypass

The peak dome pressure reaches 1244 psig. The peak reactor coolant pressure boundary (RCPB) pressure reaches 1270 psig. The peak pressure remains well below the nuclear barrier transient pressure limit of 1375 psig.

15.2.2.5 Radiological Consequences

While the consequences of this event do not result in fuel failures, the result includes the discharge of normal coolant activity to the suppression pool by means of safety/relief valve (SRV) operation. Since this activity is contained in the primary containment, there will be no exposure to the public. Since this event does not result in an uncontrolled release to the environment, the plant operator can choose to hold the activity in containment or filter the discharge prior to release to the environment when conditions permit in accordance with established requirements.

15.2.3 TURBINE TRIP

15.2.3.1 Identification of Causes and Frequency Classification

15.2.3.1.1 Identification of Causes

A variety of turbine or nuclear system malfunctions will initiate a turbine trip. Some examples are moisture separator high levels, operator lockout, loss of control fluid pressure, low condenser vacuum, and reactor high water level.

15.2.3.1.2 Frequency Classification

15.2.3.1.2.1 Turbine Trip. This event is categorized as an incident of moderate frequency. In defining the frequency of this event, turbine trips which occur as a by-product of other transients such as loss of condenser vacuum or reactor high level trip events are not included. However, spurious low vacuum or high level trip signals which cause an unnecessary turbine trip are included in defining the frequency.

15.2.3.1.2.2 Turbine Trip with Failure of Bypass. This transient disturbance is categorized as a moderate frequency incident.

15.2.3.2 Sequence of Events and Systems Operation

15.2.3.2.1 Sequence of Events

15.2.3.2.1.1 Turbine Trip. This transient is classified as a nonlimiting event for both original and uprated power conditions. Therefore, the original rated power (3323 MWt) analysis has not been updated. Turbine trip at high power produces the sequence of events listed in Table 15.2-4.

15.2.3.2.1.2 Turbine Trip with Failure of Bypass. Turbine trip at high power with bypass failure produces the sequence of events listed in Table 15.2-5.

15.2.3.2.2 Systems Operation

15.2.3.2.2.1 Turbine Trip. All plant control systems maintain normal operation unless specifically designated to the contrary.

Turbine stop (throttle) valve closure initiates a reactor scram trip by means of valve position signals to the protection system.

Turbine stop valve closure initiates RPT thereby terminating the jet pump drive flow.

The pressure relief system, which operates the relief valves independently when system pressure exceeds relief valve instrumentation setpoints, is assumed to function normally during the time period analyzed.

The severity of turbine trips from lower initial power levels decreases to the point where a scram can be avoided if auxiliary power is available from an external source and the power level is within the bypass capability.

15.2.3.2.2.2 Turbine Trip with Failure of Bypass. Same as Section 15.2.3.2.2.1 except that failure of the main turbine bypass system is assumed for the entire transient time period analyzed. During the transient the SRVs open and close sequentially as the stored energy is dissipated until the pressure falls below the valve setpoints.

15.2.3.2.2.3 Turbine Trip at Low Power with Failure of Bypass. Same as Section 15.2.3.2.2.1 except that failure of the main turbine bypass system is assumed.

Below 29.5% NBR power level, a main stop valve scram trip inhibit signal derived from the first stage pressure of the turbine is activated. This is done to eliminate the stop valve scram trip signal from scramming the reactor provided the bypass system functions properly. In other words, the bypass would be sufficient at this low power to accommodate a turbine trip without the necessity of shutting down the reactor. All other protection system functions remain functional as before and credit is taken for those protection system trips.

15.2.3.2.3 The Effect of Single Failures and Operator Errors

15.2.3.2.3.1 Turbine Trips at Power Levels Greater Than 29.5% Nuclear Boiler Rated. Mitigation of pressure increase, the basic nature of this transient, is accomplished by the RPS functions. Main stop valve closure scram trip and RPT are designed to satisfy single failure criterion.

15.2.3.2.3.2 Turbine Trips at Power Levels Less Than 29.5% Nuclear Boiler Rated. Same as Section 15.2.3.2.3.1 except RPT and stop valve closure scram trip is normally inoperative. Since protection is still provided by high flux, high pressure, etc., these will continue to function and scram the reactor should a single failure occur.

15.2.3.3 Core and System Performance

15.2.3.3.1 Mathematical Model

15.2.3.3.1.1 Turbine Trip with Bypass. The predicted dynamic behavior for the turbine trip has been determined using a computer simulated, analytical model of a generic direct-cycle BWR, as discussed in Section 15.2.2.3.1. This model is described in detail in Reference 15.2-4.

15.2.3.3.1.2 Turbine Trip with Bypass Failure. The three-dimensional TRACG model described in Section 15.0.3.3.1 is used to simulate this event.

15.2.3.3.2 Input Parameters and Initial Conditions

These analyses have been performed, unless otherwise noted, with plant conditions tabulated in Table 15.0-2 for the turbine trip with bypass and Table 15.0-2B for the turbine trip with bypass failure.

The turbine trip analysis was performed at the 105% of the original rated steam flow. The turbine trip with bypass failure was analyzed at an initial condition of 100% rated power (3544 MWt) and 106% rated core flow.

Turbine stop (throttle) valves full stroke closure time is 0.1 sec.

A reactor scram is initiated by position switches on the stop valves when the valves are 90% open or less. This stop valve scram trip signal is automatically bypassed when the reactor is below 29.5% NBR power level.

Reduction in core recirculation flow is initiated by position switches on the main stop valves, which actuate trip circuitry which trips the recirculation pumps.

15.2.3.3.3 Results

15.2.3.3.3.1 Turbine Trip. The results of a turbine trip with the bypass system operating normally are shown in Figure 15.2-3.

Neutron flux increases rapidly because of the void reduction caused by the pressure increase. However, the flux increase is limited to 138% of rated by the stop valve scram and the RPT system. Peak fuel surface heat flux does not exceed 101.7% of its initial value.

15.2.3.3.3.2 Turbine Trip with Failure of Bypass. The results of a turbine trip with failure of the bypass system are shown in Figure 15.2-4.

The peak neutron flux reaches 308% of its rated value, and peak surface heat flux reaches 111% of its initial value.

Compliance with the event acceptance criteria is demonstrated by cycle-dependent analysis of potentially limiting events just prior to the operation of that cycle. The results are reported in the Supplemental Reload Licensing Report (Reference 15.2-3) if the event is limiting.

15.2.3.3.3.3 Turbine Trip with Bypass Valve Failure, Low Power. This transient is less severe than a similar one at high power. Below 29.5% of rated power, the turbine stop valve closure and TCV (governor valve) closure scrams are automatically bypassed. At these lower power levels, turbine first stage pressure is used to initiate the scram logic bypass. The scram which terminates the transient is initiated by high vessel pressure. The bypass valves are assumed to fail; therefore, system pressure will increase until the pressure relief setpoints are reached. At this time, because of the relatively low power of this transient event, relatively few relief valves will open to limit reactor pressure. Peak pressures are not expected to greatly exceed the pressure relief valve setpoints and will be significantly below the reactor coolant pressure boundary (RCPB) transient limit of 1375 psig. Peak surface heat flux and peak fuel center temperature remain at relatively low values and MCPR remains well above the GETAB $MCPR_{99.9\%}$.

15.2.3.3.4 Considerations of Uncertainties

Uncertainties in these analyses involve protection system settings, system capacities, and system response characteristics. In all cases, the most conservative values are used in the analyses. For example:

a. Slowest allowable control rod scram motion is assumed,
b. Scram worth shape for all-rod-out conditions is assumed,
c. Minimum specified valve capacities are utilized for overpressure protection, and
d. Setpoints of the SRVs include errors and uncertainties (high) for all valves.

15.2.3.4 Barrier Performance

15.2.3.4.1 Turbine Trip

Peak pressure in the bottom of the vessel reaches 1163 psig, which is below the American Society of Mechanical Engineers (ASME) Code limit of 1375 psig for the RCPB. Vessel dome pressure does not exceed 1136 psig.

15.2.3.4.2 Turbine Trip with Failure of Bypass

The peak steam line pressure reaches 1235 psig. The peak reactor coolant pressure boundary (RCPB) pressure reaches 1260 psig. The peak pressure remains well below the nuclear barrier transient pressure limit of 1375 psig.

15.2.3.4.2.1 Turbine Trip with Failure of Bypass at Low Power. Qualitative discussion is provided in Section 15.2.3.3.3.3.

15.2.3.5 Radiological Consequences

The consequence of this event does not result in fuel failure. It does result in the discharge of normal coolant activity to the suppression pool by means of SRV operation, which is contained in the primary containment. This event does not result in an uncontrolled release to the environment, so the plant operator can choose to hold the activity in containment or discharge it when conditions permit. If purging of the containment is chosen, the release would be in accordance with established requirements.

15.2.4 MAIN STEAM LINE ISOLATION VALVE CLOSURES

This transient is classified as a nonlimiting event for both original and uprated power conditions. Therefore, cycle specific analyses are not performed for this event. The analysis results presented in the section are based on uprated power conditions and a representative reload core (Cycle 8) as documented in Reference 15.2-5.

15.2.4.1 Identification of Causes and Frequency Classification

15.2.4.1.1 Identification of Causes

Various steam line and nuclear system malfunctions, or operator actions, can initiate MSIV closure. Examples are low-steam line pressure, high-steam line flow, low-water level, or manual action.

15.2.4.1.2 Frequency Classification

15.2.4.1.2.1 Closure of All Main Steam Line Isolation Valves. This event is categorized as an incident of moderate frequency. To define the frequency of this event as an initiating event and not the byproduct of another transient, only the following contribute to the frequency: Manual action (purposely or inadvertent); spurious signals such as low pressure, low reactor water level, and low condenser vacuum; and equipment malfunctions such as faulty valves or operating mechanisms. A closure of one MSIV may cause an immediate closure of all the other MSIVs depending on reactor conditions. If this occurs, it is also included in this category. During the MSIV closure, position switches on the valves provide a reactor scram when the valves in three or more main steam lines are less than 90% open (except for interlocks which permit proper plant startup). Protection system logic permits the test closure of one valve without initiating scram from the position switches.

15.2.4.1.2.2 Closure of One Main Steam Line Isolation Valve. This event is categorized as an incident of moderate frequency. One MSIV at a time may be manually closed for testing purposes. Operator error or equipment malfunction may cause a single MSIV to be closed inadvertently. If reactor power is greater than about 75% when this occurs, a high flux or high steam line flow condition may result in a scram. If all MSIVs close as a result of the single event, the event is considered as a closure of all MSIVs. The results presented for this event assume all MSIVs close as a result of an unspecified initiating event.

15.2.4.2 Sequence of Events and Systems Operation

15.2.4.2.1 Sequence of Events

Table 15.2-6 lists the sequence of events for Figure 15.2-5. When the MSIV's reach their 85% open position, a reactor scram is initiated by the reactor protection system. The valve closure results in a system pressure increase which in turn results in a spike in reactor neutron flux. The reactor vessel pressure increase also results in an ATWS recirculation pump trip (RPT). As the pressure increases, the relief valves begin to open terminating the pressure increase.

15.2.4.2.2 Systems Operation

15.2.4.2.2.1 Closure of All Main Steam Line Isolation Valves. The MSIV closures initiate a reactor scram trip by means of position signals to the protection system. Credit is taken for successful operation of the protection system.

The pressure relief system which initiates opening of the relief valves when system pressure exceeds relief valve instrumentation setpoints is assumed to function normally during the time period analyzed.

All plant control systems maintain normal operation unless specifically designated to the contrary.

15.2.4.2.2.2 Closure of One Main Steam Line Isolation Valve. A closure of a single MSIV will not initiate a reactor scram by means of the position signal to the protection system. This is because the valve position scram trip logic is designed to accommodate single valve operation and testability during normal reactor operation at limited power levels. Credit is taken for the operation of the pressure and flux signals to initiate a reactor scram.

All plant control systems maintain normal operation unless specifically designated to the contrary.

15.2.4.2.3 The Effect of Single Failures and Operator Errors

Mitigation of pressure increase is accomplished by initiation of the reactor scram by means of MSIV position switches and the protection system. Relief valves also operate to limit system pressure. All of these aspects are designed to single failure criterion and additional single failures would not alter the results of this analysis.

Failure of a single relief valve to open is not expected to have any significant effect. Such a failure is expected to result in less than a 5 psi increase in the maximum vessel pressure rise. The peak pressure will still remain considerably below 1375 psig.

15.2.4.3 Core and System Performance

15.2.4.3.1 Mathematical Model

The point-kinetics REDY model described in Section 15.0.3.3.1 is used to simulate these transient events.

15.2.4.3.2 Input Parameters and Initial Conditions

It is assumed the closure of all MSIVs occurs with the plant operating at 104.5% of uprated power and 100% core flow. The input parameters are defined with the plant conditions tabulated in Table 15.0-2 for power uprate.

The MSIVs close in 3 to 5 sec. The worst case, the 3-sec closure time, is assumed in this analysis.

Position switches on the valves initiate a reactor scram when the valves are less than 90% open as described in Section 7.2 (85% is assumed in the analysis). Closure of these valves inhibits steam flow to the feedwater turbines terminating feedwater flow.

Valve closure indirectly causes a trip of the main turbine and generator.

Because of the loss of feedwater flow, water level within the vessel decreases sufficiently to initiate trip of the recirculation pump and to initiate the HPCS and RCIC systems.

15.2.4.3.3 Results

15.2.4.3.3.1 Closure of All Main Steam Line Isolation Valves. The reactor scram is initiated at 0.45 sec when the MSIVs reach 85% open position. The nuclear system relief valves begin to open at 3.08 sec after the start of isolation. The valves close sequentially as the stored heat is dissipated but continue to discharge the decay heat intermittently. Table 15.2-6 provides the sequence of events and Figure 15.2-5 depicts the plant parameters responses. Key transient peak values are presented in Table 15.0-1. This event is non-limiting in that the pressurization event and change in CPR margin is less severe than the Generator Load Rejection with Bypass Failure and Turbine Trip with Bypass Failure events.

15.2.4.3.3.2 Closure of One Main Steam Line Isolation Valve. Only one isolation valve is permitted to be closed at a time for testing purposes to prevent scram. Normal test procedure requires an initial power reduction to approximately 65% to 70% of design conditions to avoid high-flux scram, high-pressure scram, or full isolation from a high-steam flow condition in the open steam lines. With a 3-sec closure of one MSIV during 105% of original rated power conditions, the steam flow disturbance raises vessel pressure and reactor power enough to initiate a high neutron flux scram. This transient is considerably milder than closure of all MSIVs at full power. No quantitative analysis is furnished for this event. No significant change in thermal margins is experienced and no fuel damage occurs. Peak pressure remains below SRV setpoints.

Inadvertent closure of one or all of the isolation valves while the reactor is shut down will produce no significant transient. Closures during plant heatup will be less severe than the maximum power cases (maximum stored and decay heat).

15.2.4.3.4 Considerations of Uncertainties

Uncertainties in these analyses involve protection system settings, system capacities, and system response characteristics. In all cases, the most conservative values are used in the analyses. For example:

a. Slowest allowable control rod scram motion is assumed,

b. Scram worth shape for all-rod-out conditions is assumed,

c. Minimum specified valve capacities are used for overpressure protection, and

d. Setpoints of the SRVs are assumed to be 15 psi higher than the valve's nominal setpoint.

15.2.4.4 Barrier Performance

15.2.4.4.1 Closure of All Main Steam Line Isolation Valves

The nuclear system relief valves begin to open at approximately 3.1 sec after the start of isolation. The valves close sequentially as the stored heat is dissipated but continue to discharge the decay heat intermittently. Peak pressure at the vessel bottom reaches 1234 psig, clearly below the pressure limits of the RCPB. Peak pressure in the main steam line is 1198 psig.

15.2.4.4.2 Closure of One Main Steam Line Isolation Valve

No significant effect is imposed on the RCPB, since if closure of the valve occurs at a high operating power level a flux or pressure scram will result. The main turbine bypass system will continue to regulate system pressure by means of the other three steam lines.

15.2.4.5 Radiological Consequences

While the consequence of this event does not result in fuel failure, it does result in the discharge of normal coolant activity to the suppression pool via SRV operation. Since this activity is contained in the primary containment, there will be no exposure to the public. Since this event does not result in an uncontrolled release to the environment, the plant operator can choose to hold the activity in containment or discharge it to the environment when conditions permit. If purging of the containment is chosen, the release would be in accordance with established requirements.

15.2.5 LOSS-OF-CONDENSER VACUUM

This transient is classified as a nonlimiting event for both original and uprated power conditions. Therefore, cycle specific analyses are not performed for this event. The analysis results presented in the section are based on uprated power conditions and a representative reload core (Cycle 8) as documented in Reference 15.2-5.

15.2.5.1 Identification of Causes and Frequency Classification

15.2.5.1.1 Identification of Causes

Various malfunctions can cause a loss-of-condenser vacuum. The causes and estimated vacuum decay rates include failure or isolation of steam jet air ejectors (<1 in. Hg/mm), loss of sealing steam shaft gland seals (1 to 2 in. Hg/minute), opening of vacuum breaker valves (2 to 12 in. Hg/minute), and loss of one or more circulating water pumps (4 to 24 in. Hg/minute).

15.2.5.1.2 Frequency Classification

This event is categorized as an incident of moderate frequency.

15.2.5.2 Sequence of Events and Systems Operation

15.2.5.2.1 Sequence of Events

Table 15.2-7 lists the sequence of events for Figure 15.2-6.

15.2.5.2.2 Systems Operation

It is conservatively assumed that condenser vacuum is lost at a rate of 2 inches of Hg per second. The bypass system is signaled to close approximately 10 inches of Hg less than the stop (throttle) valve closure vacuum setpoint level which means the bypass is available for approximately 5 sec before the turbine stop (throttle) valves close. The loss of vacuum initiates a main turbine trip and feedwater turbine trip. Upon reaching 90% close, the turbine throttle (stop) valves closure results in a reactor scram. As the reactor pressure increases, the relief valves will open. Subsequently, this results in the main steam line isolation valves to close. However, the effect of the MSIV closure is minimal since the turbine stop (throttle) valve and bypass valve closure have already terminated main steam line flow.

Tripping functions incurred by sensing main turbine condenser vacuum are designated in Table 15.2-8.

15.2.5.2.3 The Effect of Single Failures and Operator Errors

Single failure will not effect the vacuum monitoring and turbine trip devices which are redundant. The protective sequences of the anticipated operational transient are shown to be single failure proof.

15.2.5.3 Core and System Performance

15.2.5.3.1 Mathematical Model

The one-dimensional ODYN model described in Section 15.0.3.3.1 was used to simulate this transient event.

15.2.5.3.2 Input Parameters and Initial Conditions

This analysis was performed with plant conditions tabulated in Table 15.0-2 and at 102.4% of uprated power and 100% core flow. Turbine stop (throttle) valves full stroke closure time used in this analysis is 0.1 second and a reactor scram is initiated by position switches on the stop valves when the valves are less than 90% open. The 2 inches of Hg per second assumed in the analysis is conservative with respect to normal loss of vacuum and no operator actions are assumed.

Thus, the bypass system is available for several seconds since the bypass is signaled to close at a vacuum level of about 10 in. Hg less than the stop valve closure.

15.2.5.3.3 Results

The loss of condenser vacuum initiates a main turbine trip, which then initiates turbine bypass operation. The bypass is available for approximately 5 sec until both the turbine bypass valves and the main steam line isolation valves receive a signal to close on low condenser vacuum. The effect of MSIV closure tends to be minimal since the closure of main turbine stop valves and subsequently the bypass valves have already shut off the main steam line flow. Figure 15.2-6 shows the transient expected for this event. It is assumed that the plant is initially operating at 105% of uprated NBR steam flow conditions. Peak neutron flux reaches 252% of NBR power while average fuel surface heat flux reaches 111% of rated value. The SRVs open to limit the pressure rise then sequentially reclose as the stored energy is dissipated.

15.2.5.3.4 Consideration of Uncertainties

The reduction or loss of vacuum in the main turbine condenser will sequentially trip the main and feedwater turbines and close the MSIVs and turbine bypass valves. While these are the major events occurring, other resultant actions will include scram (from stop valve closure)

and bypass opening with the main turbine trip. Because the protective actions are actuated at various levels of condenser vacuum, the severity of the resulting transient is dependent upon the rate at which the vacuum is lost. Normal loss of vacuum due to loss-of-cooling water pumps or steam jet air ejector problem produces a very slow rate of loss of vacuum (minutes, not seconds). If corrective actions by the reactor operators are not successful, then simultaneous trips of the main and feedwater turbines, and ultimately complete isolation by closing the bypass valves (opened with the main turbine trip) and the MSIVs, will occur.

A faster rate of loss of the condenser vacuum would reduce the anticipatory action of the scram and the overall effectiveness of the bypass valves since they would be closed more quickly.

Other uncertainties in these analyses involve protection system settings, system capacities, and system response characteristics. In all cases, the most conservative values are used in the analyses. For example:

a. Slowest allowable control rod scram motion is assumed,

b. Scram worth shape for all-rod-out conditions is assumed,

c. Minimum specified valve capacities are utilized for overpressure protection, and

d. Setpoints of the SRVs are assumed to be 15 psi higher than the valve's nominal setpoint.

15.2.5.4 Barrier Performance

The maximum calculated pressure for this event as presented in Table 15.0-1 is below the ASME Code limit of 1375 psig for the RCPB and the ASME Service Level C of 1500 psig. The consequences of this event do not result in any temperature or pressure transient in excess of the criteria for which the fuel, pressure vessel, or containment are designed. Therefore, barrier integrity and function is maintained.

15.2.5.5 Radiological Consequences

While the consequence of this event does not result in fuel failures, it does result in the discharge of normal coolant activity to the suppression pool by means of SRV operation. Since this activity is contained in the primary containment, there will be no exposure to the public. Since this event does not result in an uncontrolled release to the environment, the plant operator can choose to hold the activity in containment or discharge it to the environment when conditions permit. If purging of the containment is chosen, the release would be in accordance with established requirements.

15.2.6 LOSS OF ALTERNATING CURRENT POWER

This transient considers the loss of AC power to the plant from both an onsite cause (loss of auxiliary power transformer) and an offsite cause (loss of all grid connections).

This transient is classified as a nonlimiting event for both original and uprated power conditions. Therefore, cycle specific analyses are not performed for this event. The analysis results presented in the section are based on uprated power conditions and a representative reload core (Cycle 8) as documented in Reference 15.2-5.

15.2.6.1 Identification of Causes and Frequency Classification

15.2.6.1.1 Identification of Causes

15.2.6.1.1.1 Loss of Auxiliary Power Transformers. Causes for interruption or loss of the auxiliary power transformers can arise from normal operation or malfunctioning of transformer protection circuitry. These can include high transformer oil temperature, reverse of high current operation, and operator error which trips the transformer breakers.

15.2.6.1.1.2 Loss of All Grid Connections. Loss of all grid connections can result from major shifts in electrical loads, loss of loads, lightning, storms, wind, etc., which contribute to electrical grid instabilities. These instabilities will cause equipment damage if unchecked. Protective relay schemes automatically disconnect electrical sources and loads to mitigate damage and regain electrical grid stability.

15.2.6.1.2 Frequency Classification

15.2.6.1.2.1 Loss of Auxiliary Power Transformers. This event is categorized as an incident of moderate frequency.

15.2.6.1.2.2 Loss of All Grid Connections. This event is categorized as an incident of moderate frequency.

15.2.6.2 Sequence of Events and Systems Operation

15.2.6.2.1 Sequence of Events

15.2.6.2.1.1 Loss of Auxiliary Power Transformers. Table 15.2-9 lists the sequence of events for Figure 15.2-7.

15.2.6.2.1.2 Loss of All Grid Connections. Table 15.2-10 lists the sequence of events for Figure 15.2-8.

15.2.6.2.2 Systems Operation

15.2.6.2.2.1 Loss of Auxiliary Power Transformers. This event, unless otherwise stated, assumes and takes credit for normal functioning of plant instrumentation and controls, plant protection, and reactor protection systems.

The reactor is subjected to a complex sequence of events when the plant loses all auxiliary power. Estimates of the responses of the various reactor systems (assuming loss of the auxiliary transformers) provide the following simulation sequence:

a. Recirculation pumps and condenser circulatory water pumps trip off at time = 0. A 4 sec recirculation pump trip inertia time constant is assumed for this analysis;

b. Reactor scram and MSIV closure is initiated at 2 sec due to loss of power to the scram and MSIV relay solenoids; and

c. Feedwater turbines trip off at 4 sec due to MSIV closure at 2 sec.

Operation of the HPCS and RCIC are not simulated in this analysis. Their operation occurs at a time beyond the primary concerns of fuel thermal margin and overpressure effects of this analysis.

15.2.6.2.2.2 Loss of All Grid Connections. Same as Section 15.2.6.2.2.1 with the following additional concern.

The loss of all grid connections would add a generator load rejection to the above sequence at time, t=0. The load rejection immediately causes the TCVs (governor valves) to close, causes a scram, and initiates RPT [already tripped at reference time t = 0].

15.2.6.2.3 The Effect of Single Failures and Operator Errors

Loss of the auxiliary power transformers in general leads to a reduction in power level due to rapid pump coastdown with pressurization effects due to MSIV closure resulting from loss of power to the solenoids. Additional failures of the other systems assumed to protect the reactor would not result in an effect different from those reported. Failures of the protection systems have been considered and satisfy single failure criteria and, as such, no change in analyzed consequences is expected.

15.2.6.3 Core and System Performance

15.2.6.3.1 Mathematical Model

The point-kinetics REDY model described in Section 15.0.3.3.1 was used to simulate this event.

15.2.6.3.2 Input Parameters and Initial Conditions

15.2.6.3.2.1 Loss of Auxiliary Power Transformers. It is assumed the loss of the auxiliary power transformer occurs with the plant operating at 104.5% of uprated power and 100% core flow. The input parameters are defined with the plant conditions tabulated in Table 15.0-2 except as noted below.

a. The recirculation pump trip inertia time constant is 4 sec.

b. The relay-type Reactor Trip System (RTS) circuitry generates a reactor scram and Main Steam Isolation Valves (MSIV) closure signal due to loss of power to the scram and MSIV solenoids. This occurs 2 sec after the loss of offsite power.

c. The feedwater pumps trip due to MSIV closure 2 sec after the MSIV begin to close as a result of the loss of power to the MSIV solenoids.

15.2.6.3.2.2 Loss of All Grid Connections. It is assumed the loss of all grid connections occurs with the plant operating at 102.4% of uprated power and 100% core flow. The input parameters are defined with the plant conditions tabulated in Table 15.0-2 except as noted below.

a. The recirculation pump trip inertia time constant is 4 sec.

b. The relay-type Reactor Trip System (RTS) circuitry generates a Main Steam Isolation Valves (MSIV) closure signal due to loss of power to the MSIV solenoids. This occurs 2 sec after the loss of offsite power.

c. The feedwater pumps trip due to MSIV closure 2 sec after the MSIV begin to close as a result of the loss of power to the MSIV solenoids.

15.2.6.3.3 Results

15.2.6.3.3.1 Loss of Auxiliary Power Transformers. Initially the offsite power is cutoff causing both recirculation pumps to trip. The loss of power to the scram and MSIV solenoids causes a reactor scram, MSIV isolation and a feedwater pump trip 2 sec after the MSIV

isolation. Subsequently, the feedwater recirculation valves trip and the relief valves begin to open due to the rising pressure caused by the main steam line isolation. Table 15.2-9 provides the sequence of events and Figure 15.2-7 depicts the plant parameters responses. Key transient peak values are presented in Table 15.0-1. This event is non-limiting in that the pressurization event and change in MCPR margin are less severe than the Generator Load Rejection with Bypass Failure and Turbine Trip with Bypass Failure events.

15.2.6.3.3.2 Loss of All Grid Connections. Loss of all grid connections is a more general form of loss of auxiliary power. It essentially takes on the characteristic response of the standard full load rejection discussed in Section 15.2.2. Initially the offsite power is cutoff to the grid causing the turbine-generator to detect a loss of electrical load, and a power-load unbalance. The turbine generator overspeed protection control (OPC) initiates a control (governor) valve fast closure, turbine bypass valves opening and a reactor scram. At the same time both recirculation pump motors trip. Subsequently, MSIV isolation occurs and both feedwater pumps trip. The rising pressure due to the isolation of the steam line causes the relief valves to open. Table 15.2-10 provides the sequence of events and Figure 15.2-8 depicts the plant parameter responses. Key transient peak values are presented in Table 15.0-1. This event is non-limiting in that the pressurization event and change in MCPR margin are less severe than the Generator Load Rejection with Bypass Failure and Turbine Trip with Bypass Failure events.

15.2.6.3.4 Consideration of Uncertainties

The most conservative characteristics of protection features are assumed. Any actual deviations in plant performance are expected to make the results of this event less severe.

Operation of the HPCS and RCIC systems are not included in the simulation of the first 50 sec of this transient. Startup of the pumps occurs in the latter part of this time period but the system has no significant effect on the results of this transient.

Following main steam line isolation and prior to RHR initiation the reactor pressure is expected to increase until the SRV setpoints are reached. During this time the valves operate in a cyclic manner to discharge decay heat to the suppression pool.

15.2.6.4 Barrier Performance

15.2.6.4.1 Loss of Auxiliary Power Transformers

Safety/relief valves open in the pressure relief mode of operation as the pressure increases beyond their setpoints. The pressure in the dome is limited to a maximum value of 1169 psig well below the vessel pressure limit of 1375 psig.

15.2.6.4.2 Loss of All Grid Connections

Safety/relief valves open in the pressure relief mode of operation as the pressure increases beyond their setpoints. The pressure in the dome is limited to a maximum value of 1173 psig well below the vessel pressure limit of 1375 psig.

15.2.6.5 Radiological Consequences

The consequence of this event does not result in fuel failure. It does result in the discharge of normal coolant activity to the suppression pool by means of SRV operation, which is contained in the primary containment. This event does not result in an uncontrolled release to the environment, so the plant operator can choose to hold the activity in containment or discharge it when conditions permit. If purging of the containment is chosen, the release would be in accordance with established requirements.

15.2.7 LOSS-OF-FEEDWATER FLOW

This transient is classified as a nonlimiting event for both original and uprated power conditions. Therefore, cycle specific analyses are not performed for this event. The analysis results presented in the section are based on uprated power conditions and a representative reload core (Cycle 8) as documented in Reference 15.2-5. The analysis has not been updated for the change in MSIV isolation setpoint from Level 2 to Level 1 because the analysis is bounding and conclusions of the analysis are not affected (Reference 15.2-8).

15.2.7.1 Identification of Causes and Frequency Classification

15.2.7.1.1 Identification of Causes

A loss of feedwater flow could occur from pump failures, feedwater controller failures, operator errors, or reactor system variables such as a high vessel water level (L8) trip signal.

15.2.7.1.2 Frequency Classification

This event is categorized as an incident of moderate frequency.

15.2.7.2 Sequence of Events and Systems Operation

15.2.7.2.1 Sequence of Events

Feedwater flow terminates at approximately 5 sec. Subcooling decreases causing a reduction in core power level and pressure. As power level is lowered, the turbine steam flow starts to drop off. Water level continues to drop until the vessel level (L3) scram trip setpoint is reached, whereupon the reactor is shut down.

Main steam line isolation initiation occurs due to vessel water dropping to the L2 trip. Also at this time, the recirculation system is tripped and HPCS and RCIC operation is initiated. Operation of the HPCS and RCIC systems is not included in the simulation of the first 50 seconds of this transient since startup of the pumps occurs in the latter part of this time period. Therefore, the system has no significant effects on the results of this transient.

Table 15.2-11 lists the sequence of events for Figure 15.2-9.

15.2.7.2.2 Systems Operation

Loss of feedwater flow results in a proportional reduction of vessel inventory causing the vessel water level to drop. The first corrective action is the low level (L3) scram trip actuation. Reactor protection system responds after this trip to scram the reactor. The low level (L3) scram trip function meets single failure criterion.

Vessel water level (L2) trip initiates main steam line isolation, recirculation pump trip and HPCS/RCIC system operation (not simulated). The recirculation pump motor circuit breakers then open causing decrease in core flow to natural circulation.

15.2.7.2.3 The Effect of Single Failures and Operator Errors

The nature of this event results in a lowering of vessel water level. Key corrective efforts to shut down the reactor are automatic and designed to satisfy single failure criterion. Therefore, any additional failure in these shutdown methods would not aggravate or change the simulated transient.

The potential exists for a single relief valve failing to close once it is opened. This would result in a complete depressurization of the reactor. Either the RCIC or the HPCS system is capable of maintaining adequate core coverage and will provide long-term inventory control. For the complete loss of feedwater flow event, operation of RCIC or HPCS is sufficient to avoid initiation of ADS on low vessel level (L1).

15.2.7.3 Core and System Performance

15.2.7.3.1 Mathematical Model

The point-kinetics REDY model described in Section 15.0.3.3.1 was used to simulate this event.

15.2.7.3.2 Input Parameters and Initial Conditions

The simultaneous trip of both feedwater pumps is assumed to occur while the plant is operating at 104.5% uprated power and 100% core flow. These analyses have been performed, unless otherwise noted, with plant conditions tabulated in Table 15.0-2.

15.2.7.3.3 Results

Table 15.2-11 provides the sequence of events and Figure 15.2-9 depicts the plant parameter responses. Key transient peak values are presented in Table 15.0-1. This event is non-limiting in that the pressurization event and change in MCPR are less severe than the Generator Load Rejection with Bypass Failure and Turbine Trip with Bypass Failure events.

15.2.7.3.4 Consideration of Uncertainties

End-of-cycle scram characteristics are assumed.

This transient is most severe from high power conditions, because the rate of level decrease is greatest and the amount of stored decay heat to be dissipated is highest.

15.2.7.4 Barrier Performance

Peak pressure in the bottom of the vessel reaches 1152 psig, which is below the ASME Code limit of 1375 psig for the RCPB. Vessel dome pressure does not exceed 1142 psig. The consequences of this event do not result in any temperature or pressure transient in excess of the criteria for which the fuel, pressure vessel, or containment are designed. Therefore, barrier integrity and function are maintained.

15.2.7.5 Radiological Consequences

The consequence of this event does not result in fuel failure. It does result in the discharge of normal coolant activity to the suppression pool by means of SRV operation, which is contained in the primary containment. This event does not result in an uncontrolled release to the environment, so the plant operator can choose to hold the activity in containment or discharge it when conditions permit. If purging of the containment is chosen the release will be in accordance with established requirements.

15.2.8 FEEDWATER LINE BREAK

See Section 15.6.6.

15.2.9 FAILURE OF RESIDUAL HEAT REMOVAL SHUTDOWN COOLING

This transient is classified as a nonlimiting event for both original and uprated power conditions.

Normally, in evaluating component failures associated with the RHR shutdown cooling mode of operation, active pumps or instrumentation (all of which are redundant for the safety related portions of the RHR system) would be assumed to be the component failure. For purposes of a worst case analysis, a valve on the single recirculation suction line to the otherwise redundant RHR shutdown cooling loops is assumed to fail. Manual attempts to open the valve are assumed unsuccessful. Discovery is conservatively assumed to occur at 100 psig. This envelops discovery at normal RHR shutdown cooling operating limits (see Section 5.4.7). This failure disables the shutdown cooling mode but does not affect the remaining RHR modes of operation. Reference 15.2-1 establishes additional assumptions.

15.2.9.1 Identification of Causes and Frequency Classification

15.2.9.1.1 Identification of Causes

The plant is operating at 105% of original NBR steam flow when an event occurs, e.g., a long-term loss of offsite power, causing a plant shutdown. Reactor vessel depressurization is initiated to bring the reactor pressure to approximately 100 psig. Concurrent with the loss of offsite power a failure of a valve in the shutdown cooling suction line occurs which prevents the operator from establishing the normal shutdown cooling path through the RHR shutdown cooling lines. An additional failure is assumed which completely disables the RHR equipment in one division. The operator then establishes a shutdown cooling path for the vessel through the SRV valves.

15.2.9.1.2 Frequency Classification

This event is categorized as an incident of moderate frequency.

15.2.9.2 Sequence of Events and Systems Operation

15.2.9.2.1 Sequence of Events

The sequence of events for this event is shown in Table 15.2-12.

15.2.9.2.1.1 Identification of Operator Actions. For the early part of the transient, the operator actions are to restore and maintain reactor water level. The operator should reestablish reactor cooling by one or more of the following:

a. Maintain reactor water inventory with the RCIC (when single failure is not assumed to be a loss of Division 1 dc power) and HPCS systems,

b. At approximately 10 minutes into the transient, initiate suppression pool cooling, it is assumed that only one RHR heat exchanger is available,

c. Initiate RPV shutdown depressurization by manual actuation of the SRVs,

d. Attempts to open one of the two RHR shutdown cooling suction valves are assumed unsuccessful (reactor pressure is approximately 100 psig), and

e. Continue RPV depressurization by opening SRVs and establish a reactor cooling path as described in the notes for Figure 15.2-10.

Time required to initiate the necessary steps to maintain reactor pressure and level control is approximately 10 minutes.

15.2.9.2.2 Systems Operation

Plant instrumentation and control is assumed to be functioning normally except as noted. In this evaluation credit is taken for the plant and reactor protection systems and/or the ESF used.

15.2.9.2.3 The Effect of Single Failures and Operator Errors

The worst case single failure (loss of division power) has already been analyzed in this event. Therefore, no single failure or operator error can increase the consequences of this event.

15.2.9.3 Core and System Performance

The earliest time the shutdown cooling system can be actuated is 2 to 3 hr after shutdown is initiated. During this time MCPR remains high and nucleate boiling heat transfer is not exceeded at any time. Therefore, the core thermal safety margin remains essentially unchanged. The 10-minute time period approximated for operator action is an estimate of how long it would take the operator to initiate the necessary actions. It is not a time by which action must be initiated.

The transient behavior of the core during this event has been evaluated in Section 15.2.6.

15.2.9.4 Results

For most single failures that could result in loss of shutdown cooling, no unique safety actions are required. In these cases, shutdown cooling is simply reestablished using the redundant shutdown cooling loop. In cases where the RHR shutdown cooling suction line valves cannot be opened, alternate paths are available to accomplish the shutdown cooling function (Figure 15.2-11). An evaluation has been performed assuming a failure that disables the RHR shutdown cooling suction line valves.

This evaluation demonstrates the capability to safely transfer fission product decay heat and other residual heat from the reactor core at a rate such that specified acceptable fuel design limits and the design conditions of the RCPB are not exceeded.

The alternate cooldown path chosen to accomplish the shutdown cooling function uses the RHR and ADS or normal relief valve systems (see Reference 15.2-1 and Figure 15.2-10). The alternate shutdown systems are capable of performing the function of transferring heat from the reactor to the environment using only safety systems. The systems are capable of bringing the reactor to a cold shutdown in approximately 36 hr or less after the transient occurs.

The systems have suitable redundancy in components such that even for onsite electrical power operation (offsite power is not available), the safety function of the systems can be accomplished assuming an additional single failure. The systems can be fully operated from the main control room.

The design evaluation is divided into two phases: (a) full power operation to approximately 100 psig vessel pressure, and (b) approximately 100 psig vessel pressure to cold shutdown (14.7 psia 200°F) conditions.

15.2.9.4.1 Full Power to Approximately 100 psig

Independent of the event that initiated plant shutdown (whether it be a normal plant shutdown or a forced plant shutdown), the reactor is normally brought to approximately 100 psig using either the main condenser or, in the case where the main condenser is unavailable, the HPCS and RCIC systems together with the nuclear boiler pressure relief system and the RHR heat exchanger in the suppression pool cooling mode.

For evaluation purposes, however, it is assumed that plant shutdown is initiated by a transient event (loss of offsite power) which results in relief valve actuation and subsequent suppression pool heatup. For this postulated condition, the reactor is shut down and the reactor vessel pressure is reduced to approximately 100 psig. Manual operation of the SRVs is used to depressurize the reactor vessel. Reactor vessel makeup water is automatically provided by means of the RCIC (until reduced vessel pressure is reached) and HPCS systems. While in

this condition, the RHR system (suppression pool cooling mode) is used to maintain the suppression pool temperature within shutdown limits.

These systems are designed to routinely perform their functions for both normal and forced plant shutdown. Since the HPCS and RHR systems are divisionally separated and the HPCS and RCIC systems are divisionally separated, no single failure together with the loss of offsite power, is capable of preventing reaching the 100 psig level.

15.2.9.4.2 Approximately 100 psig to Cold Shutdown

The following assumptions are used for the analyses of the procedures for attaining cold shutdown from a pressure of approximately 100 psig:

a. The vessel is at 100 psig and saturated conditions,

b. A worst-case single failure is assumed to occur (i.e., loss of a division of emergency power), and

c. There is no offsite power available.

In the event that the RHRs shutdown suction line is not available because of single failure, the first action to be taken will be to control reactor pressure. If a single electrical failure caused the suction line to fail in the closed position, a hand wheel is provided on the valve to allow manual operation. If for some reason the normal shutdown cooling suction line cannot be restored to service, the capabilities described below will satisfy the normal shutdown cooling requirements and thus fully comply with GDC 34.

The RHR shutdown cooling line valves are in two divisions (Division 1 - the outboard valve, and Division 2 - the inboard valve) to satisfy containment isolation criteria. For evaluation purposes, the worst-case failure is assumed to be the loss of a division of emergency power, since this also prevents electrical actuation of one shutdown cooling line valve. Engineered safety features equipment and safe shutdown RCIC equipment (until reduced reactor pressure is reached) available for accomplishing the shutdown cooling function include (for the selected path):

ADS (dc Division 1 and dc Division 2)

RHR Loop A (Division 1)

HPCS (Division 3)

RCIC (dc Division 1)

LPCS (Division 1)

Since availability or failure of Division 3 equipment does not affect the normal shutdown mode, normal shutdown cooling is easily available through equipment powered from only Divisions 1 and 2. It should be noted that, HPCS is always available for coolant injection if either of the other two divisions fails. For failure of Division 1 or 2, the following systems are assumed functional:

a. Division 1 Fails, Division 2 and 3 Functional

Failed Systems	Functional Systems
RHR Loop A	HPCS
LPCS	ADS
RCIC	RHR Loops B and C

Assuming the single failure is a failure of Division 1 emergency power, the safety function is accomplished by establishing one of the cooling loops described in Activity C1 of Figure 15.2-10.

b. Division 2 Fails, Division 1 and 3 Functional

Failed Systems	Functional Systems
RHR Loop B and C	HPCS ADS RHR Loop A LPCS RCIC (until reduced reactor pressure is reached)

Assuming the single failure is the failure of Division 2, the safety function is accomplished by establishing one of the cooling loops described in Activity C2 of Figure 15.2-10. Figures 15.2-12 through 15.2-15 show RHR loops A, B, and/or C (simplified).

15.2.9.4.3 Temperature Response – 3462 MWt

The reactor vessel temperature and pressure response versus time for the core conditions defined in Table 15.2-13 (105% of original rated steam flow, 3462 MWt rated power) are presented in Figures 15.2-16 and 15.2-17. Figure 5.2-16 presents the results for

Activity C1.b.1 or C2 described in Figure 15.2-10. Figure 5.2-17 presents the results for Activity C1.b.2. The bulk suppression pool temperature responses from the same analysis are presented in Figures 15.2-18 and 15.2-19. Figure 5.2-18 presents the results for Activity C1.b.1 or C2 and Figure 5.2-19 presents the results for Activity C1.b.2.

15.2.9.4.4 Temperature Response – 3702 MWt

Reference 15.2-7 analyzed the same two scenarios (Activities C2 and C1.b.2) for 104.5% of power uprate conditions (3702 MWt) to determine the peak bulk suppression pool temperature and the time required to cool the reactor vessel to cold shutdown (14.7 psia and 200°F). The analysis at power uprate conditions calculated a relative 4°F increase in the peak bulk pool temperature due to the power uprate. However, the peak temperature calculated was lower than the temperatures presented in this section due to the use of more realistic assumptions. These assumptions include a more realistic decay heat model, lower initial suppression pool temperature (90°F), and more realistic treatment of pump heat addition.

15.2.9.5 Barrier Performance

As noted above, the consequences of this event do not result in any temperature or pressure transient in excess of the criteria for which the fuel, pressure vessel, or containment are designed. Release of coolant to the containment occurs by means of SRV actuation.

15.2.9.6 Radiological Consequences

The consequence of this event does not result in fuel failure. It does result in the discharge of normal coolant activity to the suppression pool by means of SRV operation, which is contained in the primary containment. This event does not result in an uncontrolled release to the environment, so the plant operator can choose to hold the activity in containment or discharge it when conditions permit. If purging of the containment is chosen, the release would be in accordance with established requirements.

15.2.10 REFERENCES

15.2-1 Letter - R. S. Boyd to I. F. Stuart; dated November 12, 1975. Subject: Requirements delineated for RHRS - Shutdown Cooling System - Single Failure Analysis.

15.2-2 NEDC-24154-P-A, “Qualification of the One-Dimensional Core Transient Model for Boiling Water Reactors,” Volumes 1, 2, 3 and 4, February 2000.

15.2-3 Supplemental Reload Licensing Report for Columbia (most recent version referenced in COLR).

15.2-4 R. B. Linford, "Analytical Methods of Plant Transient Evaluations for the General Electric Boiling Water Reactor," NEDO 10802, April 1973.

15.2-5 For Power Uprate: GE Nuclear Energy, "WNP-2 Power Uprate Transient Analysis Task Report," GE-NE-208-08-0393, September 1993 (Proprietary).

15.2-6 Deleted.

15.2-7 GE Nuclear Energy, "WNP-2 Power Uprate Project NSSS Engineering Report," GE-NE-208-17-0993, Revision 1, December 1994 (Proprietary).

15.2-8 AREVA NP, Inc., "Columbia Generating Station MSIV Closure Level Setpoint Change - Loss of Feedwater Flow Transient Analysis," 51-9084418-000, July 2008.

15.2-9 GE Hitachi Nuclear Energy, "License Amendment Request for Proposed Changes to Columbia Technical Specifications: Changing Group 1 Isolation Valves' Low Reactor Water Level Isolation Signal from the Current Level 2 to Level 1," 0000-0081-6730-R1, July 2008.

15.2-10 NEDE-32906P-A, "TRACG Application for Anticipated Operational Occurrences Transient Analyses," Revision 3, September 2006.

Table 15.2-1

Sequence of Events for Figure 15.2-1

Pressure Regulator Failure - Closed
102.4% Uprated Power - 106% Flow

Time (sec)	Event
0	Failure of the pressure regulator causes closure of the turbine control valves.
1.0	Scram signal initiated at high neutron flux.
2.0	Recirculation pump motor circuit breakers open causing decrease in core flow to the natural circulation.
2.56	Group 3 relief valves actuated.
2.67	Group 4 relief valves actuated.
2.77	Group 5 relief valves actuated.
2.84	Turbine control valves close.

Table 15.2-2

Sequence of Events for Figure 15.2-2.1

Generator Load Rejection with Bypass On
Original Rated Power

Time (sec)	Event
(-)0.015[a]	Turbine generator detection of loss of electrical load.
0	Turbine generator overspeed protection control (OPC) devices trip to initiate turbine control (governor) valve fast closure.
0	Turbine generator OPC trip initiates main turbine bypass system operation.
0	Fast control valve closure initiates scram trip.
0	Fast control valve closure initiates an RPT.
0.07	Turbine control valves closed.
0.11	Turbine bypass valves start to open.
0.19	Recirculation pump motor circuit breakers open causing decrease in core flow to natural circulation.
1.70	Group 1 relief valves actuated.
1.86	Group 2 relief valves actuated.
2.01	Group 3 relief valves actuated.
2.27	Group 4 relief valves actuated.

[a] Approximately.

Table 15.2-3

Typical Sequence of Events for Figure 15.2-2.2

Generator Load Rejection with Bypass Failure
100% Power 106% Flow

Time (sec)	Event
(-)0.003[a]	Turbine generator detection of loss of electrical load.
0	Turbine generator OPC devices trip to initiate turbine control (governor) valve fast closure.
0	Turbine bypass valves fail to operate.
0.03	Time of scram trip.
0.15	Turbine control valves fully closed.
0.20	Time of RPT trip.
0.28	Start of control blade motion.
(b)	Group 1 MSRVs actuated (safety function).
(b)	Group 2 MSRVs actuated (safety function).
2.83	Group 3 MSRVs actuated (safety function).
3.17	Group 4 MSRVs actuated (safety function).

[a] Approximately.

[b] Not used - out of service for this analysis.

Table 15.2-4

Sequence of Events for Figure 15.2-3

Turbine Trip, Trip Scram - Bypass and RPT On
Original Rated Power

Time (sec)	Event
0	Turbine trip initiates closure of main stop (throttle) valves.
0	Turbine trip initiates bypass operation.
0.01	Main turbine stop valves reach 90% open position and initiate reactor scram trip.
0.01	Main turbine stop valves reach 90% open position and initiate an RPT.
0.10	Turbine stop valves closed.
0.10	Turbine bypass valves start to open to regulate pressure.
0.20	Recirculation pump motor circuit breakers open causing decrease in core flow to natural circulation.
1.63	Group 1 relief valves actuated.
1.78	Group 2 relief valves actuated.
1.94	Group 3 relief valves actuated.
2.14	Group 4 relief valves actuated.
2.50	Group 5 relief valves actuated.
4.67	Feedwater turbines trip on L8 high water level.
5.1[a]	Group 5 relief valves start to close.
7.2[a]	All relief groups closed.
31.0	Turbine bypass starts to close.
32.3[a]	Turbine bypass closed.
39.7	Turbine bypass reopens on pressure increase at turbine inlet.
45.3	Main steam line isolation[b], HPCS system initiation, and RCIC system initiation on low level (L2) (not included in simulation).
50+	Group 1 relief valves cycle open and close on pressure.

[a] Estimated.

[b] The analysis has not been updated for the change in MSIV isolation setpoint from Level 2 to Level 1 because the analysis is bounding and conclusions of the analysis are not affected (Reference 15.2-9).

Table 15.2-5

Sequence of Events for Figure 15.2-4

Turbine Trip with Bypass Failure
at 100% Power/106% Core Flow

Time (sec)	Event
0	Turbine trip initiates closure of main stop (throttle) valves.
0	Turbine bypass valves fail to operate.
0.01	Main turbine stop valves reach 90% open position and initiate reactor scram trip.
0.10	Turbine stop valves closed.
0.20	Recirculation pump motor circuit breakers open causing decrease in core flow to natural circulation.
(a)	Group 1 relief valves actuated.
(a)	Group 2 relief valves actuated.
2.83	Group 3 relief valves actuated.
3.18	Group 4 relief valves actuated.

[a] Not used - out of service for this analysis.

Table 15.2-6

Sequence of Events for Figure 15.2-5

Main Steam Line Isolation Valve Closure
104.5% Uprated Power, 100% Rated Flow

Time (sec)	Event
(-) 0.003 (approximately)	Turbine-Generator detection of loss of electrical load.
0	Initiate closure of all main steam line valves.
0.45	MSIVs reach 85% opening initiating a position valve scram.
2.0	Loss of feedwater begins as turbine loses steam supply.
2.53	Both recirculation pumps trip due to high pressure.
3.0	All MSIVs closed.
3.08	Groups 3 relief valves actuated.
3.16	Groups 4 relief valves actuated.
3.24	Groups 5 relief valves actuated.
11 (approx.)	All pressure relieve valves closed.
18.23	Groups 3 relief valves begin to cycle.

Table 15.2-7

Sequence of Events for Figure 15.2-6

Loss of Condenser Vacuum
102.4% Uprated Power, 100% Rated Flow

Time (sec)	Event
(-)5.0 (approximately)	Initiate simulated loss of condenser vacuum at 2 in. of Hg per second.
0.00	Low condenser vacuum main turbine trip and feedwater turbine trips initiated.
0.00	Main turbine trip initiates turbine bypass operation.
0.01	Main turbine stop valves reach 90% open position and initiate reactor scram.
0.19	Both recirculation pumps trip.
2.15	Group 3 relief valves actuated.
2.28	Group 4 relief valves actuated.
2.42	Group 5 relief valves actuated.
2.91	Feedwater recirculation valve is tripped.
5.00	Low condenser vacuum initiates turbine bypass valve closure and MSIV closure.
5.6 (approx.)	All relief valves closed.
6.0 (approx.)	Main steam isolation valves closed.
7.90	Group 3 relief valves reactuated.
8.35	Group 4 relief valves reactuated.
24.01	Group 5 relief valves reactuated.

Table 15.2-8

Trip Signals Associated with Loss-of-Condenser Vacuum

Vacuum[a]	Protective Action Initiated
27 to 30	Normal vacuum range.
20 to 23	Main turbine trip and feedwater turbine trip (stop valve closures).
7 to 10	Main steam line isolation valve closure and bypass valve closure.

[a] Inches of Hg.

Table 15.2-9

Sequence of Events for Figure 15.2-7

Loss of Auxiliary Power Transformers
104.5% Uprated Power, 100% Rated Flow

Time (sec)	Event
0.00	Loss of auxiliary power transformers occurs.
0.00	Recirculation system pump motors are tripped.
2.00	Reactor scram due to loss of power to the scram solenoid.
2.00	Main steam line isolation valves begin to close due to loss of power to MSIV solenoids.
4.00	Feedwater pumps are tripped due to MSIV closure.
5.98	Group 3 relief valves actuated.
6.15	Group 4 relief valves actuated.
6.34	Group 5 relief valves actuated.

Table 15.2-10

Sequence of Events for Figure 15.2-8

Loss of All Grid Connections
102.4% Uprated Power, 100% Rated Flow

Time (sec)	Event
0.00	Loss of grid causes turbine-generator to detect a loss of electrical load.
0.00	Turbine-generator PLU devices trip to initiate TCV fast closure and turbine bypass system operation.
0.00	Recirculation pumps trip.
0.00	Fast control valve closure initiates reactor scram.
2.00	Main steam line isolation is initiated due to loss of power to the solenoids.
2.12	Group 3 relief valves actuated.
2.25	Group 4 relief valves actuated.
2.37	Group 5 relief valves actuated.
4.00	Feedwater pump tripped due to MSIV closure.

Table 15.2-11

Sequence of Events for Figure 15.2-9

Loss of All Feedwater Flow
104.5% Uprated Power, 100% Rated Flow

Time (sec)	Event
0	Initiate trip of all feedwater pumps.
3.91	Recirculation runback initiated with narrow range sensed level less than L4 and feedwater pumps off.
7.38	Vessel water level (L3) trip initiates scram trip.
32.32	Vessel water level (L2) trip initiates main steam line isolation[a], recirculation pump trip and HPCS/RCIC system operation (not simulated).
32.51	Recirculation pump motor circuit breakers open causing decrease in core flow to natural circulation.

[a] The analysis has not been updated for the change in MSIV isolation setpoint from Level 2 to Level 1 because the analysis is bounding and conclusions of the analysis are not affected (Reference 15.2-8).

Table 15.2-12

Sequence of Events for Failure of Residual Heat Removal Shutdown Cooling

Original Rated Power

Time[a]	Event
0	Reactor is operating at 105% NBR steam flow when LOP transient occurs initiating plant shutdown.
0	Concurrently loss of division power occurs (i.e., loss of one diesel generator).
0	Initial suppression pool temperature at 95°F.
10 minutes	Suppression pool cooling initiated to prevent overheating from SRV actuation.
10 minutes	Controlled blowdown initiated.
2-3 hr	Blowdown to 100 psi completed.
2-3 hr	Personnel are sent in to open RHR shutdown cooling suction valve and fail.
2.5-3.5 hr	Complete blowdown to suppression pool by opening SRVs.
2.5-3.5 hr	Redirect RHR pump discharge from pool to vessel by means of the LPCI line. Alternate cooling path now established.
7 hr	Maximum suppression pool temperature attained.

[a] Approximately.

Table 15.2-13

Evaluation of Failure of Residual Heat Removal
Shutdown Cooling

Parameter	Value
Initial power corresponding	105% original rated steam flow
To suppression pool mass (lbm)	8.52 E6
Residual heat removal (KHX value) (Btu/sec/°F)	289
Initial vessel condition	
Pressure (psia)	1055
Temperature (°F)	550.7
Initial primary fluid inventory (lbm)	7.016 E5
Initial pool temperature (°F)	95
Service water temperature (°F)	87
Vessel heat capacity (Btu/lbm/°F)	0.123
High-pressure core spray on-off water level (ft)	
HPCS ON	40.8
HPCS OFF	47
High-pressure core spray flow rate (lbm/sec)	868
Low-pressure coolant injection flow rate (lbm/sec)	982

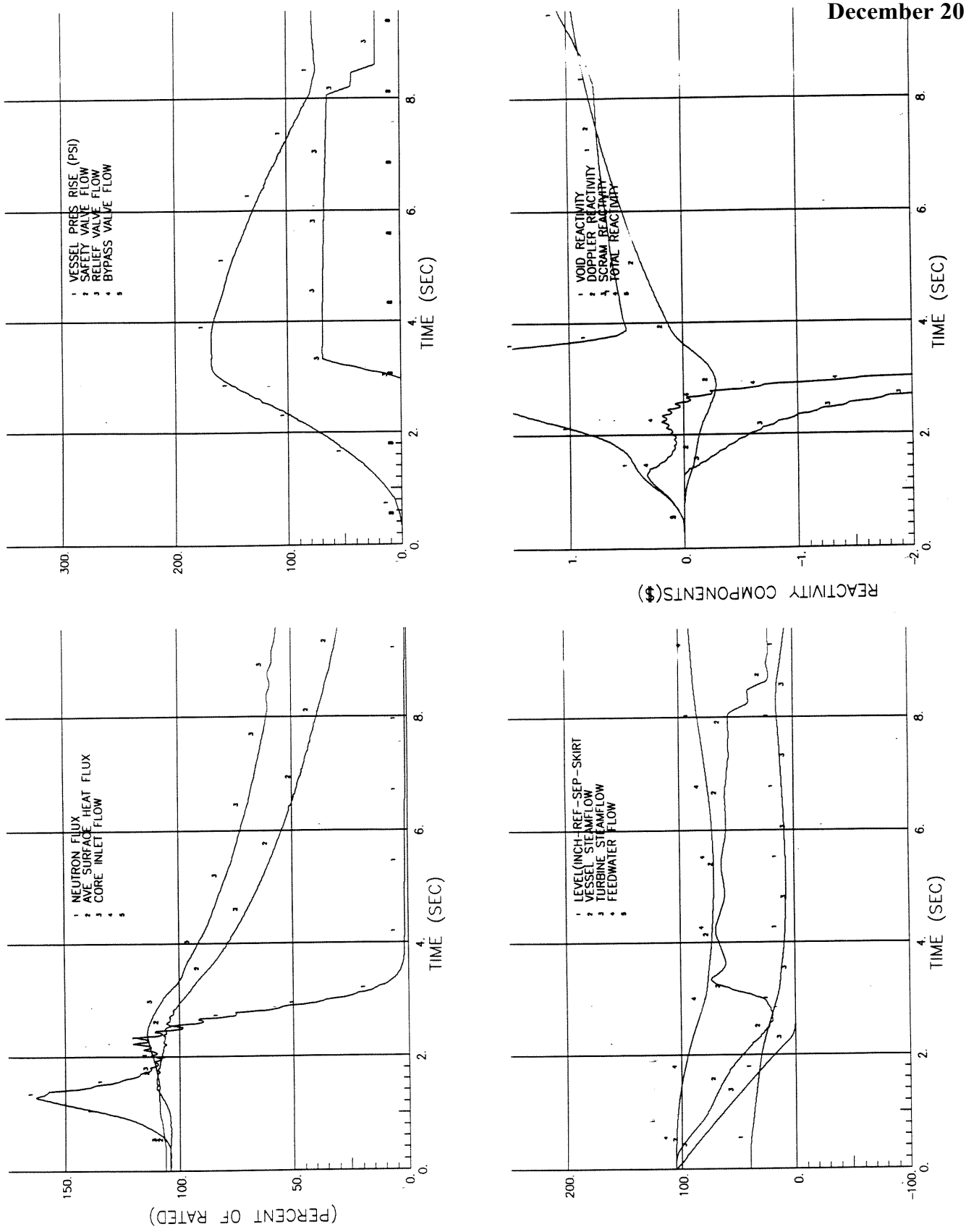

*% Uprated power (RTP) is based on 3544 MWt. Curves as shown are originally based on 3486 MWt.

Columbia Generating Station **Final Safety Analysis Report**	**Pressure Regulator Failure - Down Scale Failure at 102.4*% Uprated Power, 106% Flow**		
	Draw. No. 060108.06	**Rev.**	**Figure 15.2-1**

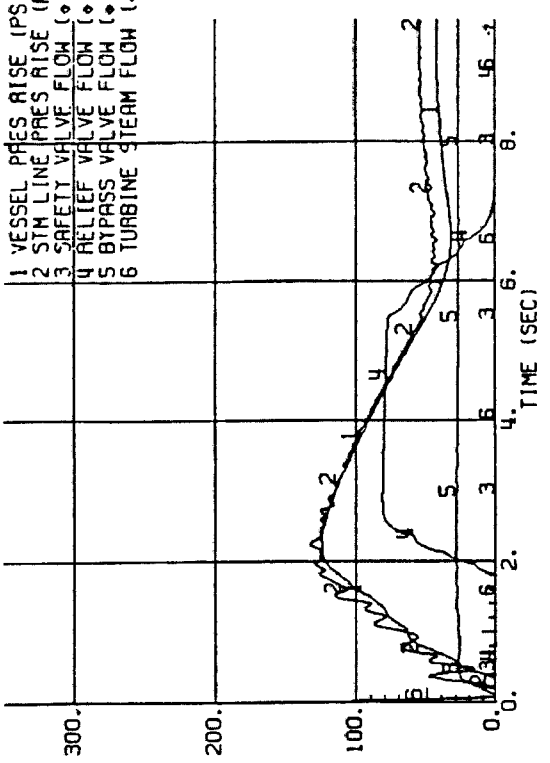

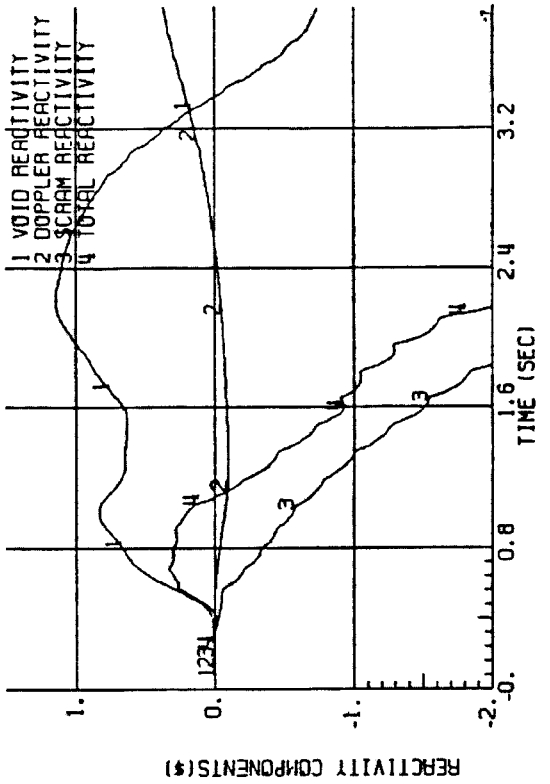

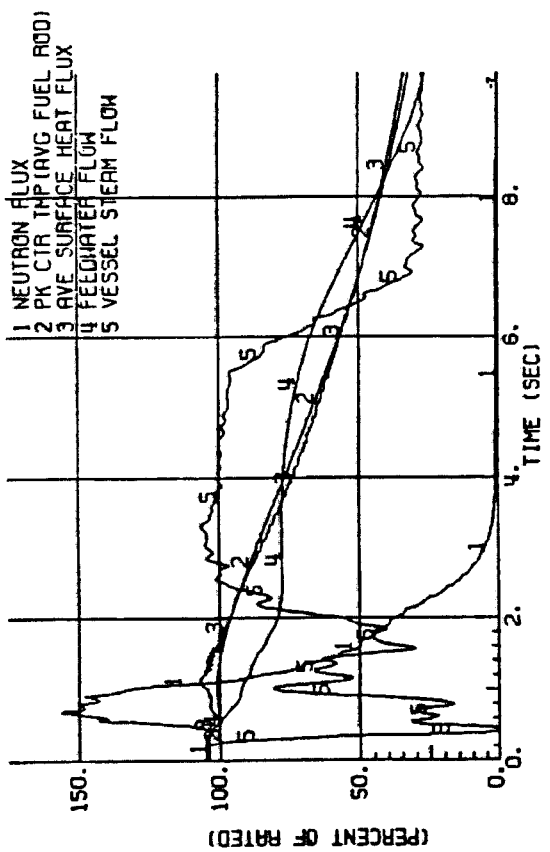

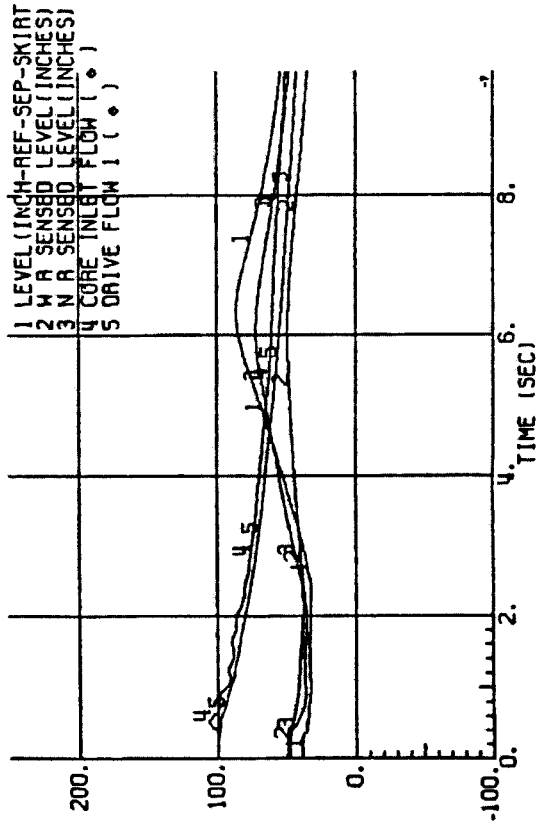

Columbia Generating Station Final Safety Analysis Report	Generator Load Rejection with Bypass On - Original Rated Power		
	Draw. No. 020361.68	Rev.	Figure 15.2-2.1

LRNBP
ICF_BNE0-EIS

KK1
24

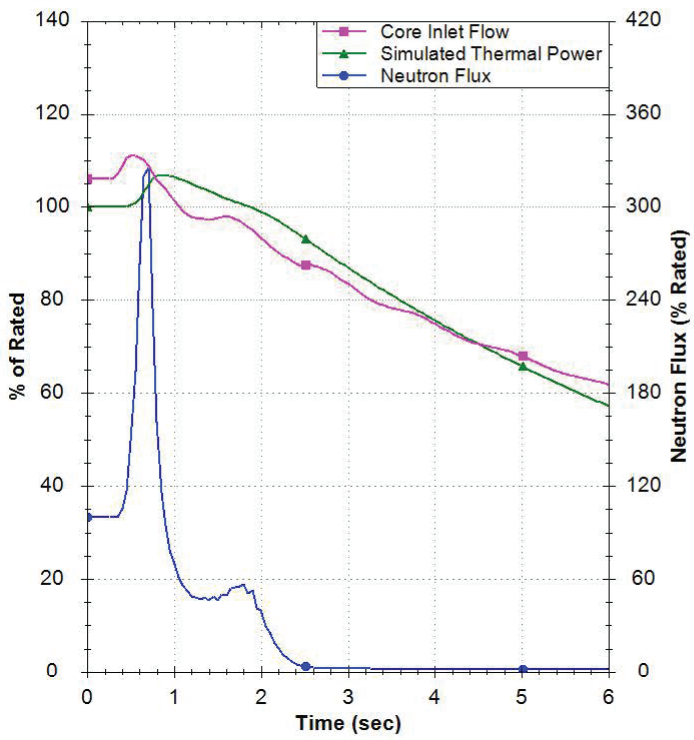

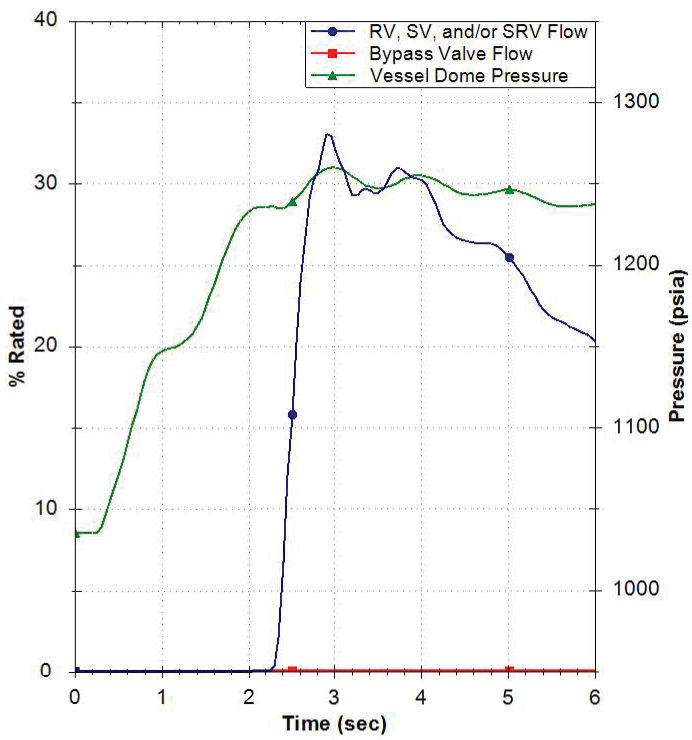

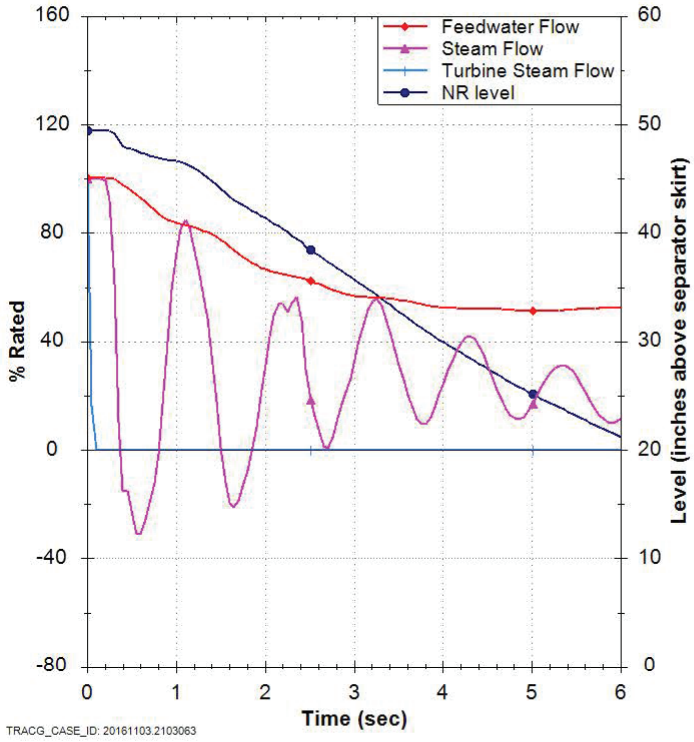

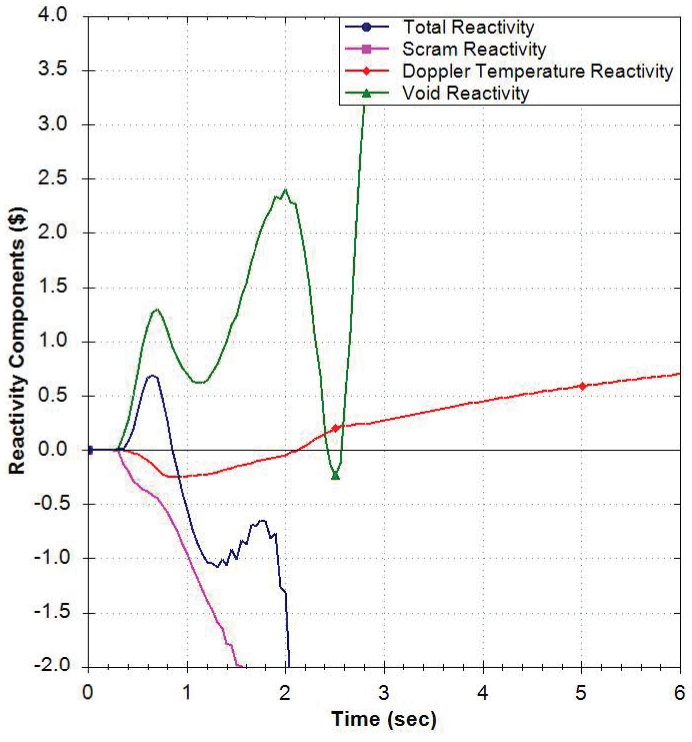

Columbia Generating Station Final Safety Analysis Report	**Generator Load Rejection with BP Failure**		
	Draw. No. 020361.69	Rev. 2	Figure 15.2-2.2

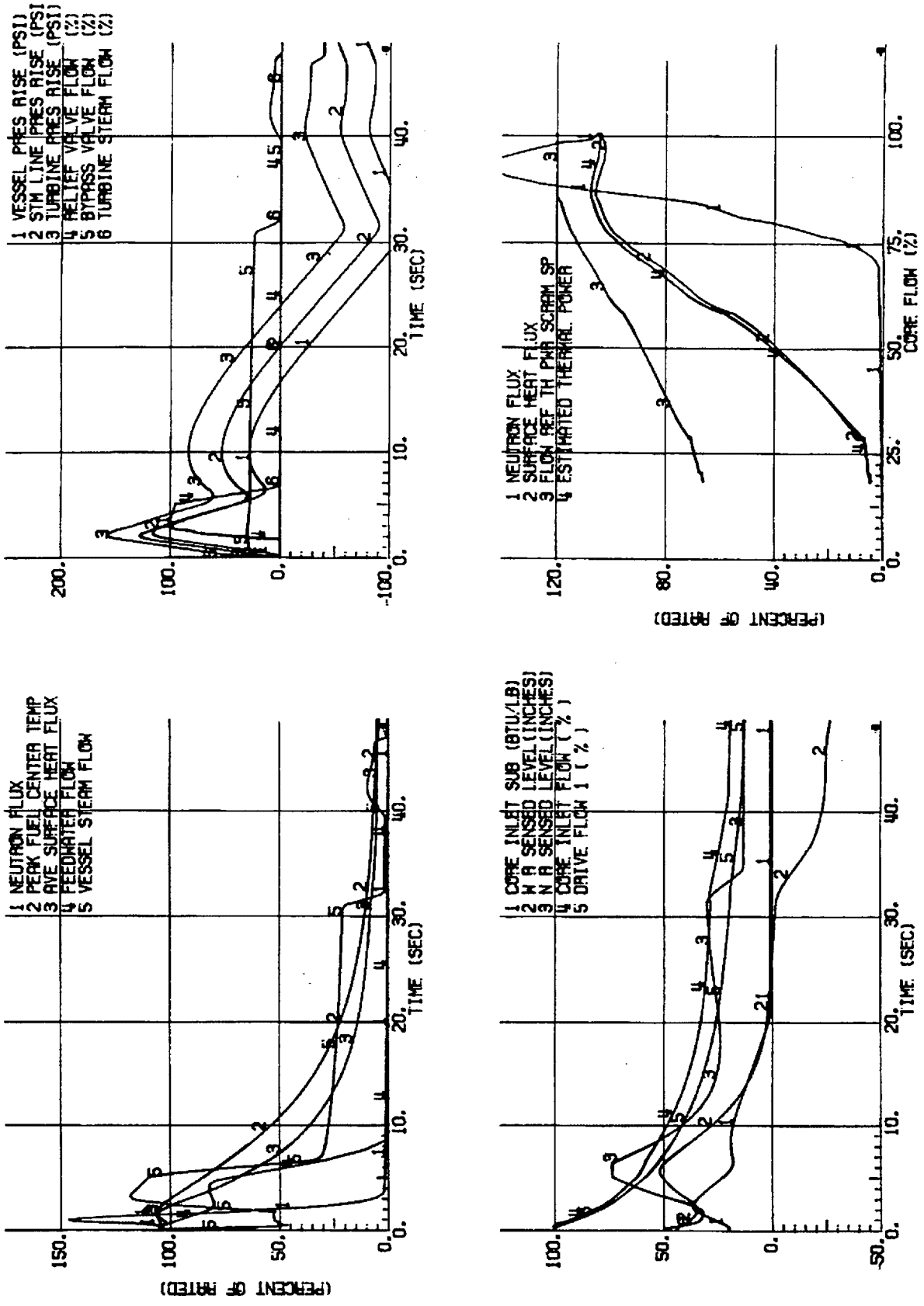

Columbia Generating Station
Final Safety Analysis Report

Turbine Trip, Trip Scram, Bypass and RPT - On

Draw. No. 020361.70	Rev.	Figure 15.2-3

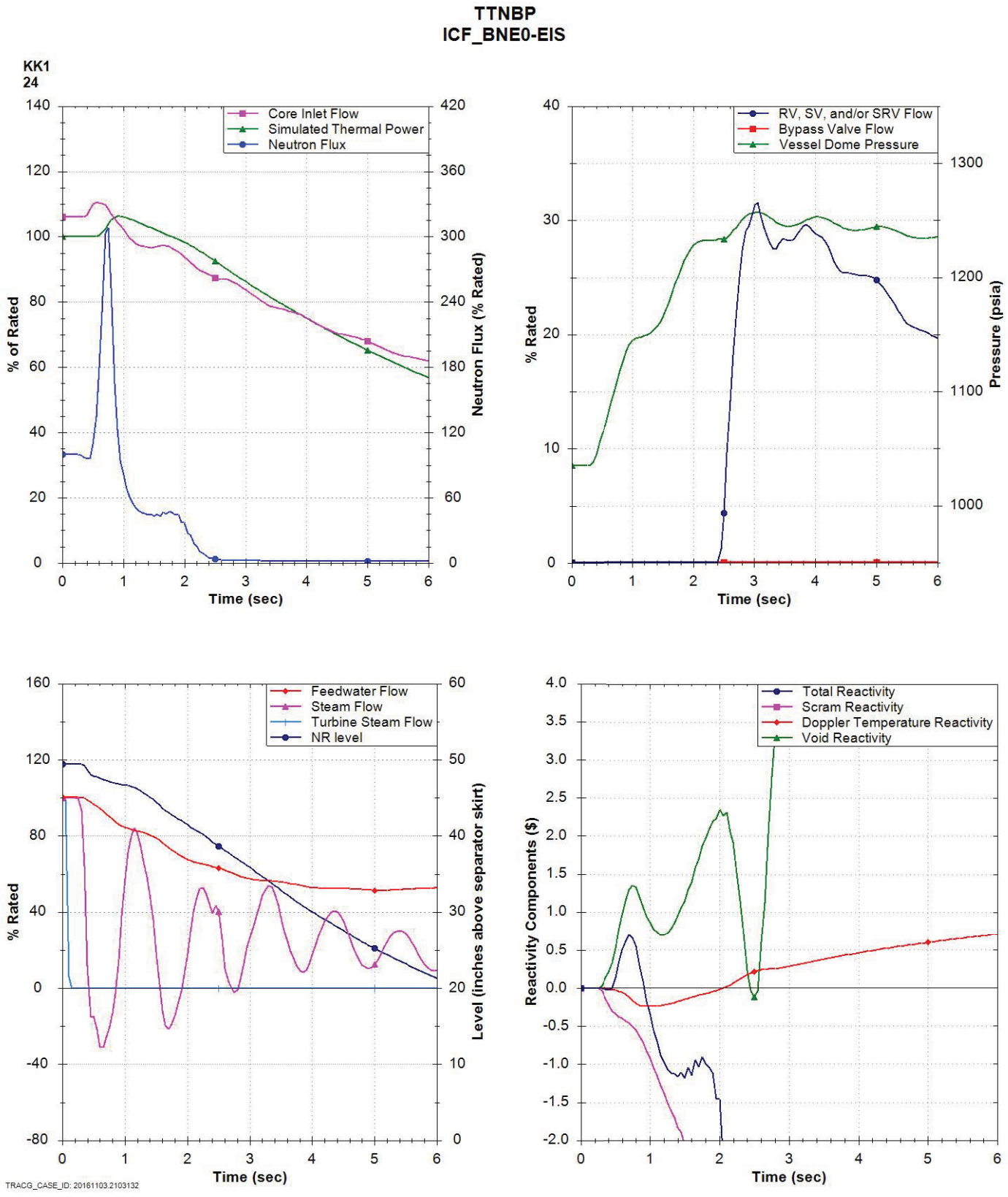

Columbia Generating Station Final Safety Analysis Report	**Turbine Trip with Bypass Failure**		
	Draw. No. 020361.71	Rev 1	Figure 15.2-4

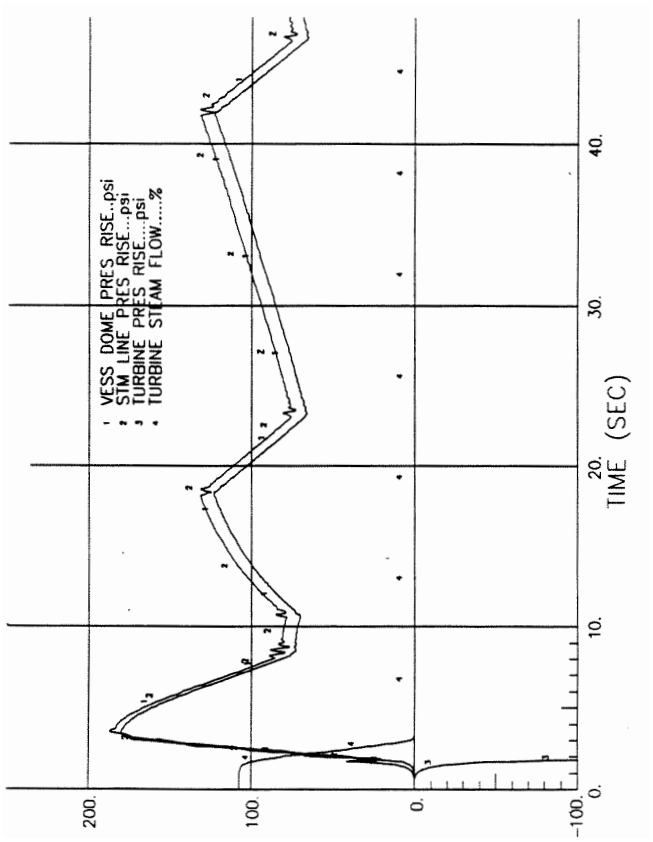

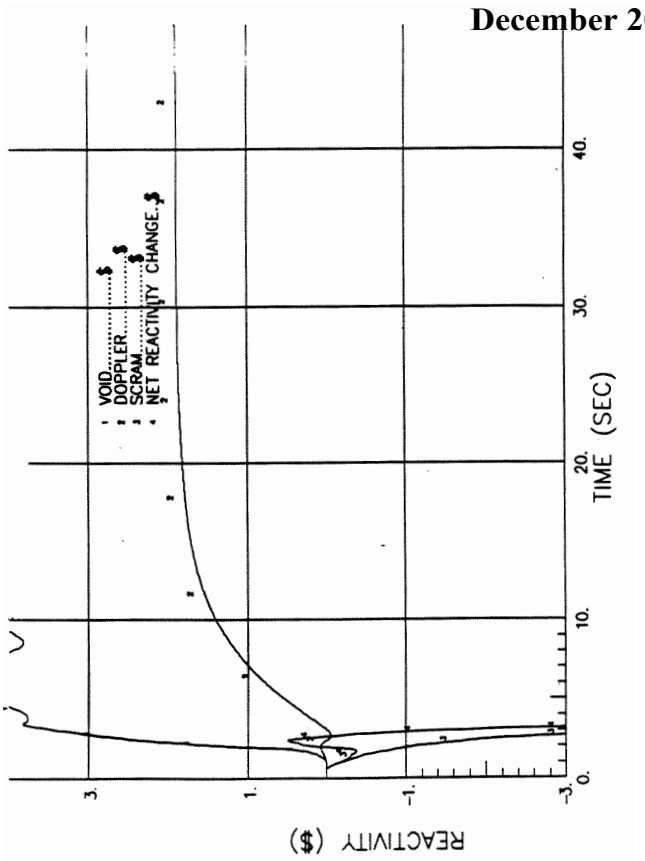

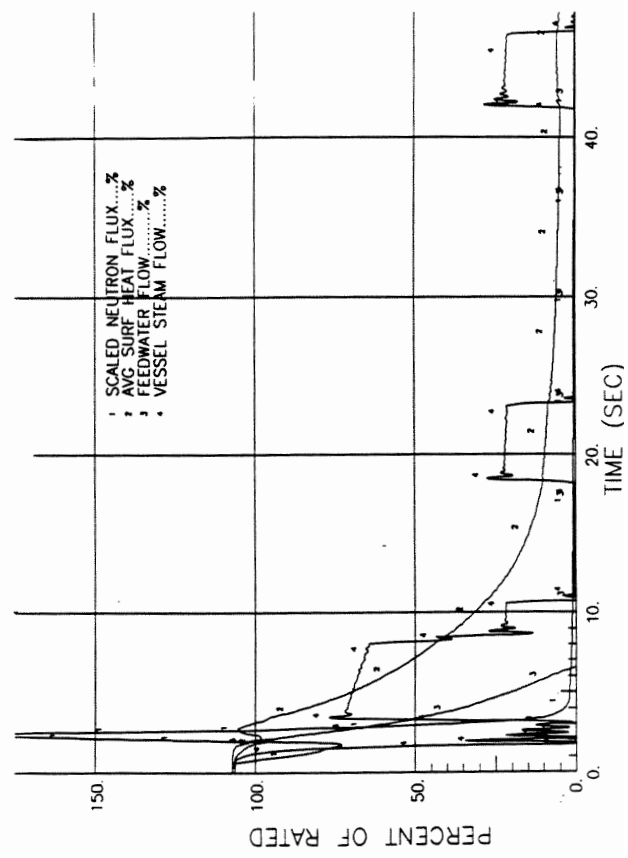

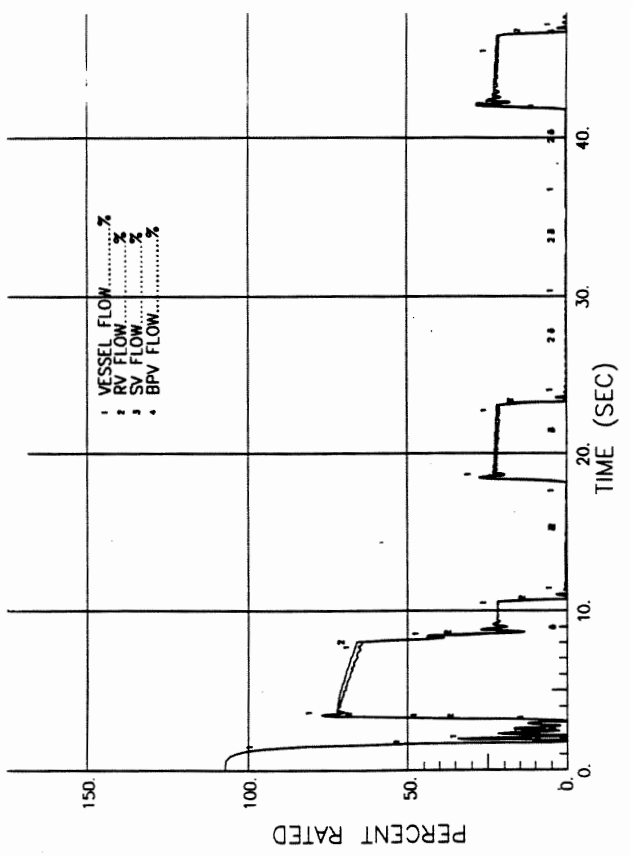

*% uprated power (RTP) is based on 3544 MWt. Curves as shown are originally based on 3486 MWt.

Columbia Generating Station Final Safety Analysis Report	**Main Steam Line Isolation Valve Closure at 104.5*% Uprated Power, 100% Rated Flow**
	Draw. No. 020361.72 | Rev. | Figure 15.2-5

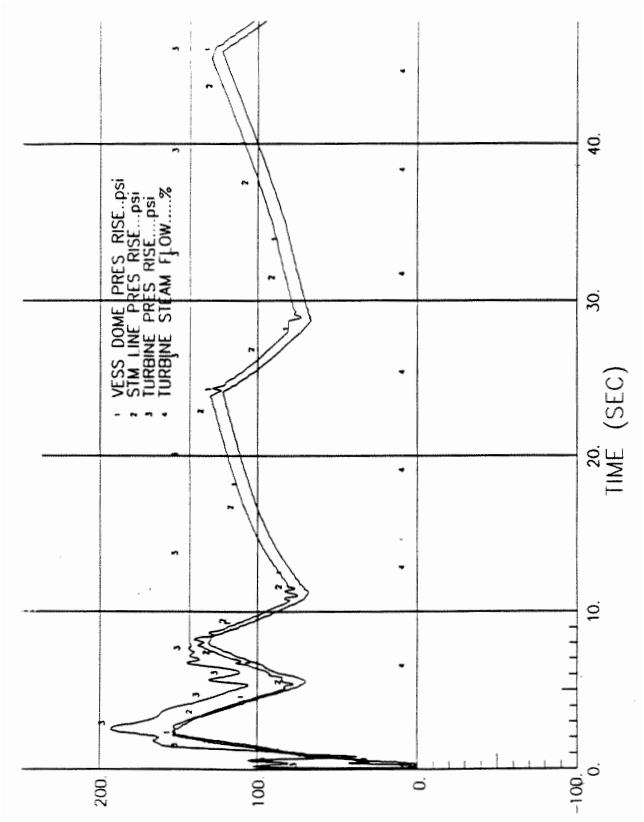

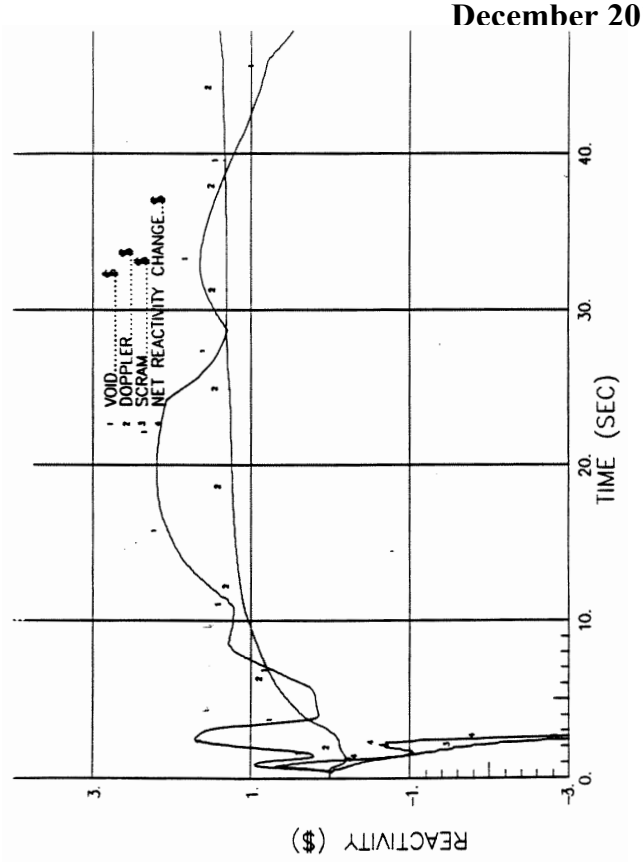

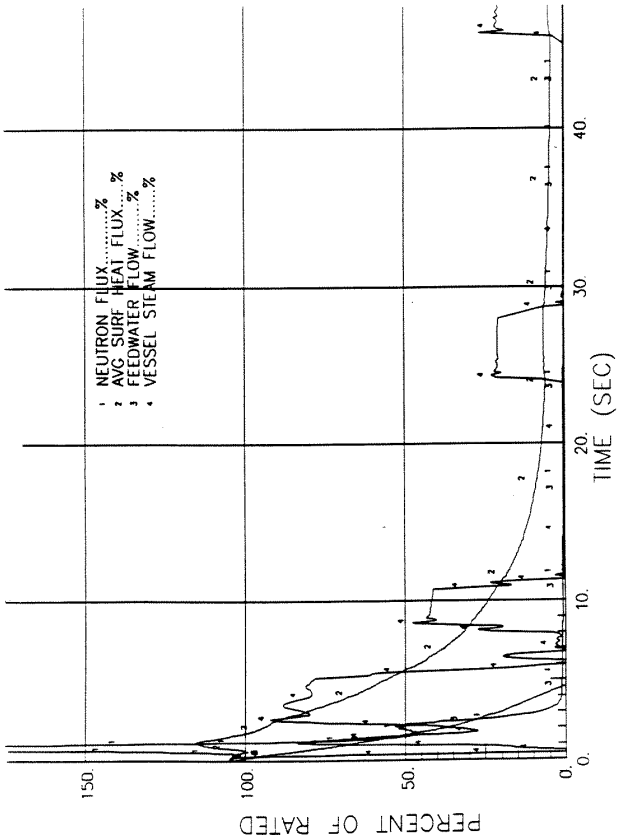

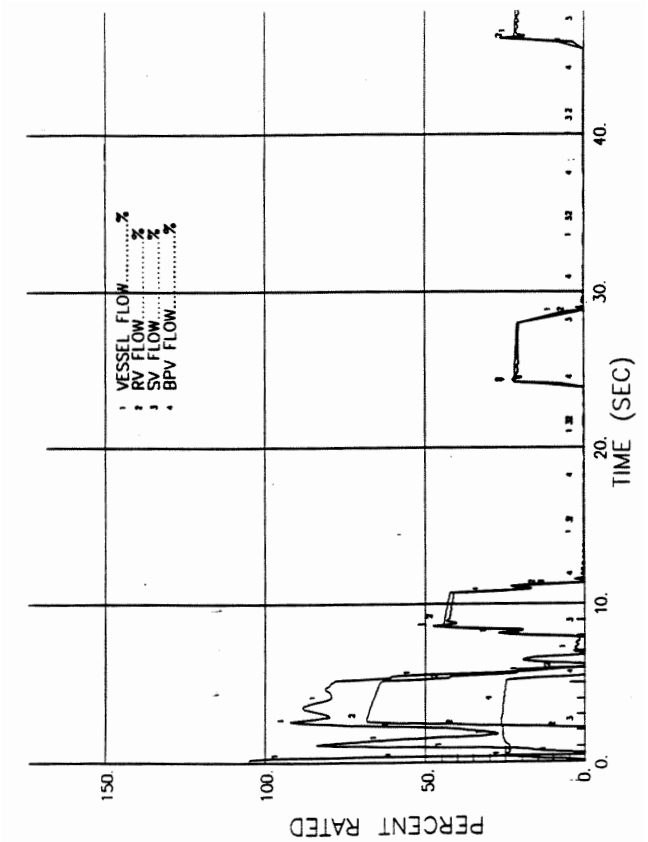

*% Uprated power (RTP) is based on 3544 MWt. Curves as shown are originally based on 3486 MWt.

Columbia Generating Station Final Safety Analysis Report	**Loss of Condenser Vacuum at 102.4*% Uprated Power, 100% Rated Flow**		
	Draw. No. 020361.73	**Rev.**	**Figure 15.2-6**

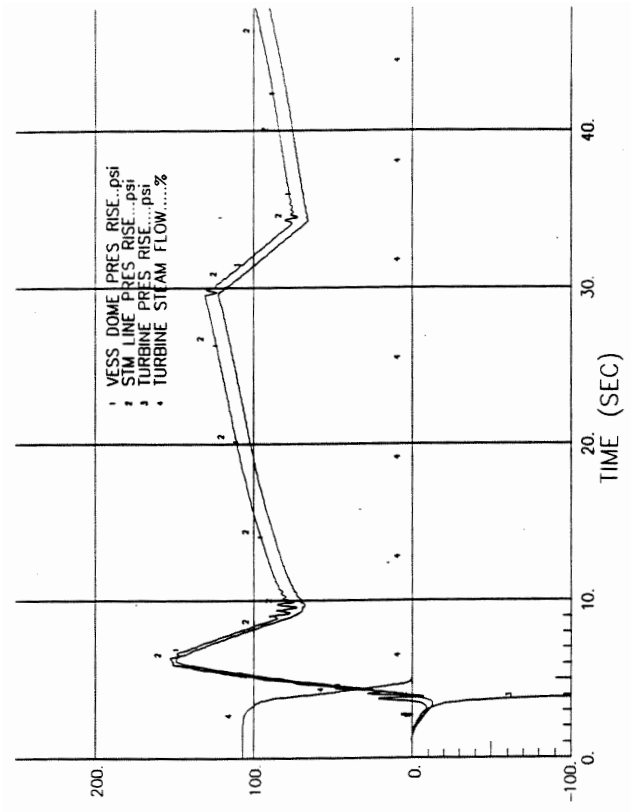

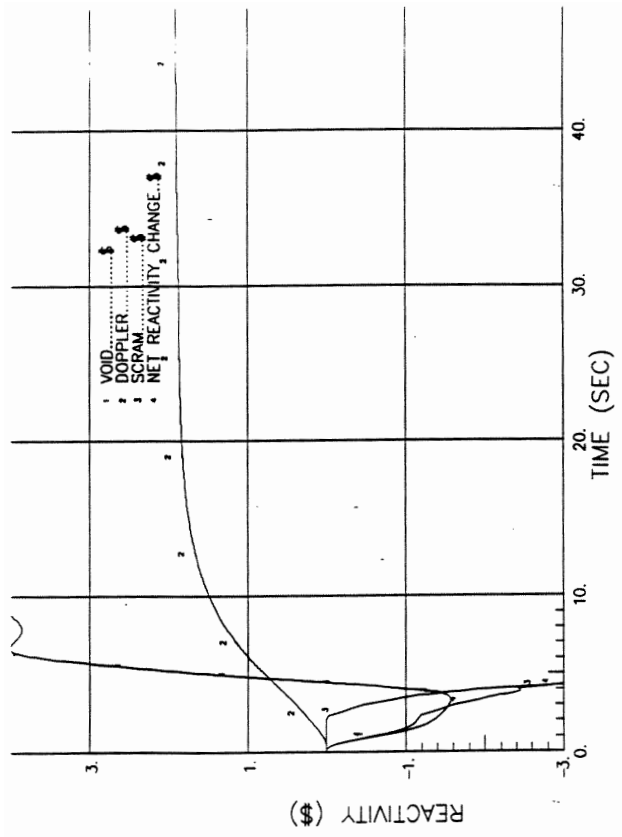

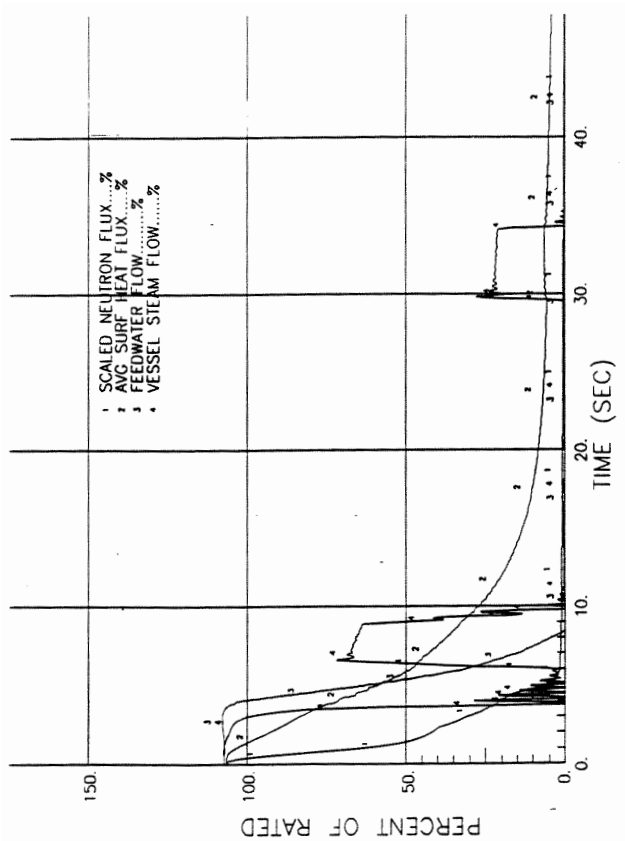

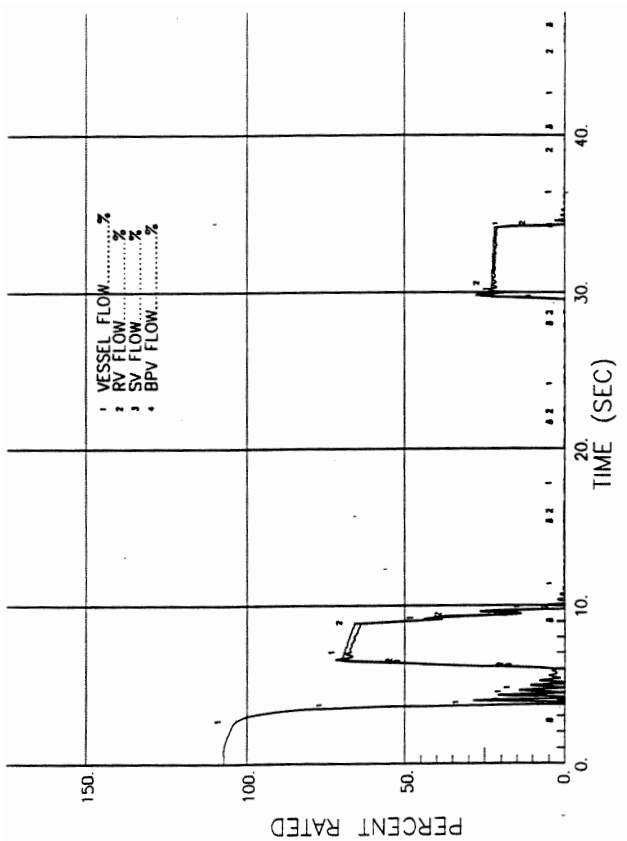

*% Uprated power (RTP) is based on 3544 MWt. Curves as shown are originally based on 3486 MWt.

Columbia Generating Station **Final Safety Analysis Report**	**Loss of Auxiliary Power Transformers - at 104.5*% Uprated Power, 100% Rated Flow**
	Draw. No. 020361.74 | **Rev.** | **Figure 15.2-7**

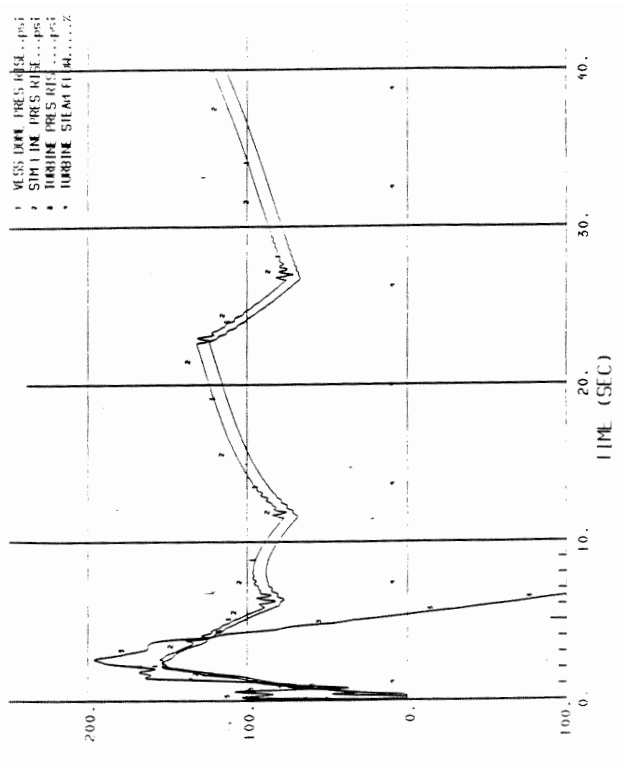

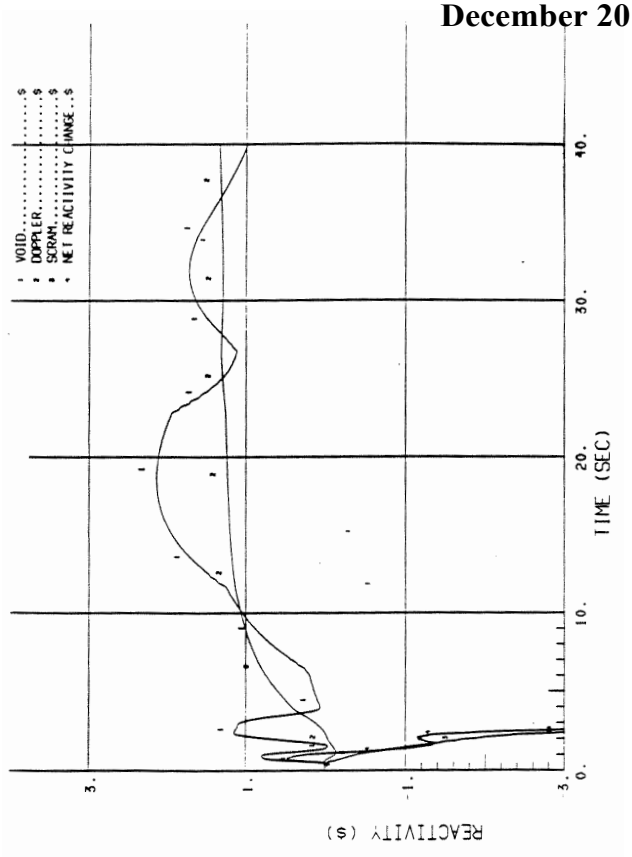

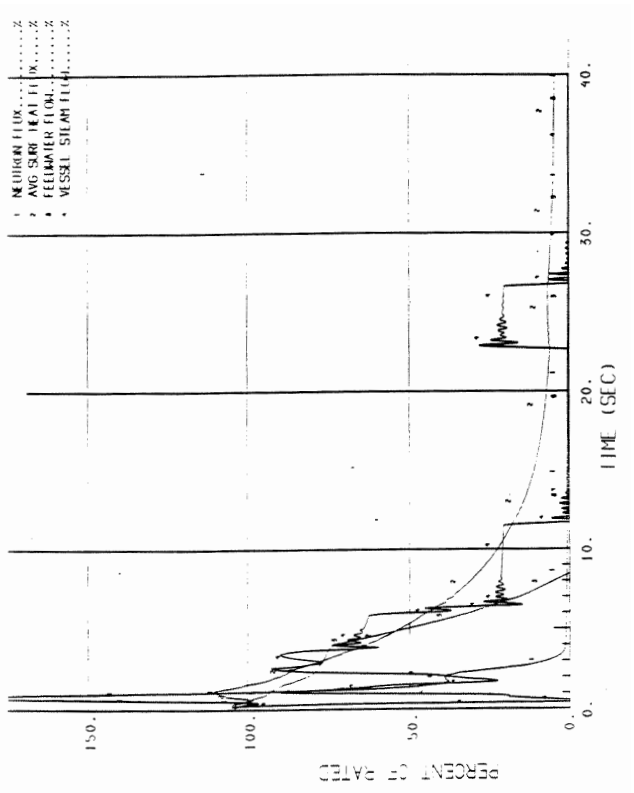

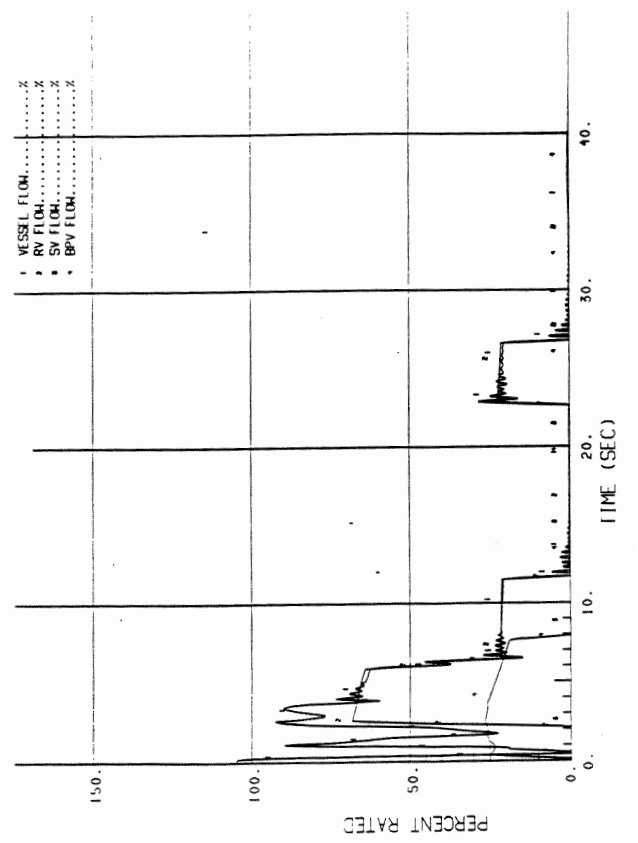

*% Uprated power (RTP) is based on 3544 MWt. Curves as shown are originally based on 3486 MWt.

Columbia Generating Station **Final Safety Analysis Report**	**Loss of All Grid Connections -** **102.4*% Uprated Power, 100% Rated Flow**
	Draw. No. 020361.75 | **Rev.** | **Figure 15.2-8**

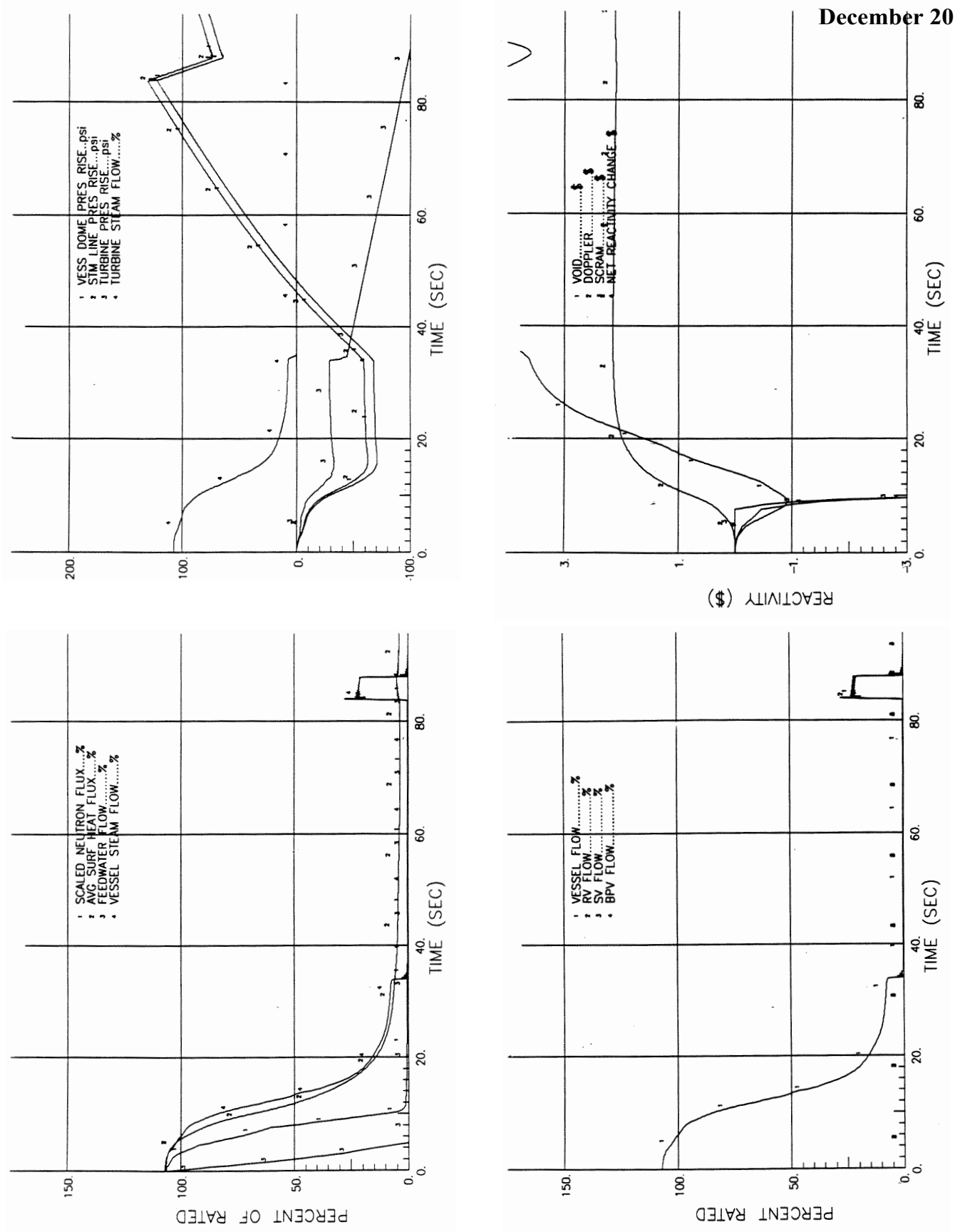

*% Uprated power (RTP) is based on 3544 MWt. Curves as shown are originally based on 3486 MWt.

Columbia Generating Station **Final Safety Analysis Report**	**Loss of All Feedwater Flow -** **104.5*% Uprated Power, 100% Rated Flow**
	Draw. No. 020361.76 | **Rev.** | **Figure 15.2-9**

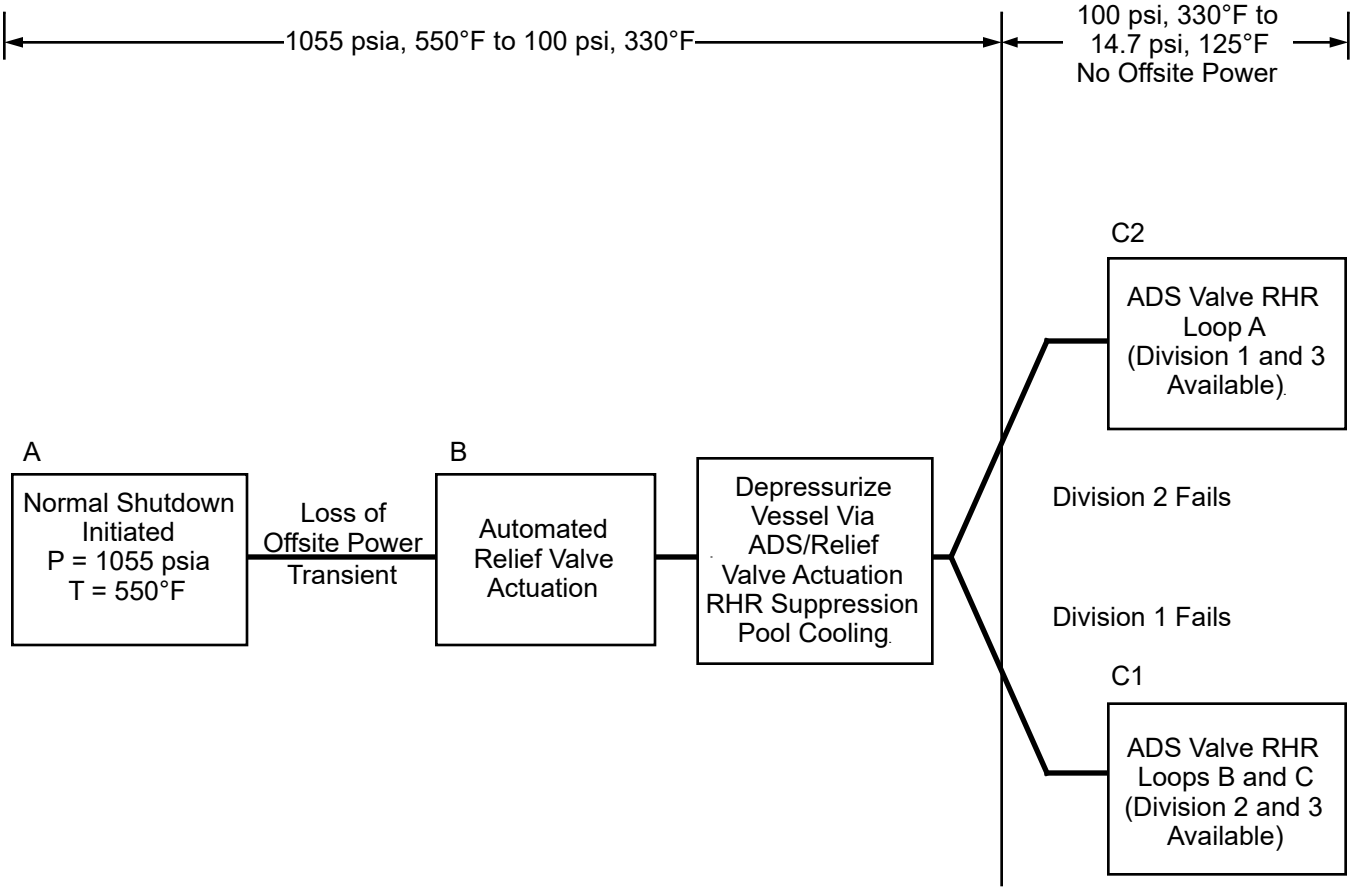

Columbia Generating Station Final Safety Analysis Report	Automatic Depressurization System/Residual Heat Removal Cooling Loops		
	Draw. No. 900547.63	Rev.	Figure 15.2-10.1

NOTES

ACTIVITY A
Initial pressure =1055 psia
Initial temperature = 550°F
For purpose of this analysis, the following worst-case conditions are assumed to exist:

a. The reactor is assumed to be operating at 105% of original NBR steam flow,
b. A loss of power transient occurs,
c. A simultaneous loss of onsite power (Division 1 or Division 2), and
d. Operator unable to open one of the RHR shutdown cooling line suction valves.

ACTIVITY B
Initial system pressure =1055 psia
Initial system temperature = 550°F

Operator Actions
During approximately the first 30 minutes, reactor decay heat is passed to the suppression pool by the automatic operation of the reactor relief valves. Reactor water level will be returned to normal by the HPCS and RCIC systems automatic operation.

After approximately 10 minutes, the operator initiates depressurization of the reactor vessel to control vessel pressure. Controlled depressurization procedure consists of controlling vessel pressure and water level by using the SRV or HPCS and/or RCIC systems. After approximately 15 minutes, it is assumed one RHR heat exchanger is placed in the suppression pool cooling mode to remove decay heat. At this time, the suppression pool will be 121°F.

When the reactor pressure approaches 100 psig, the operator would normally prepare for operation of the RHR system in the shutdown cooling mode. At this time (121 minutes), the suppression pool will be 186°F.

ACTIVITY C1 (Division 1 fails, Division 2 available)
System pressure =100 psig
System temperature = 330°F

Operation Actions

The operator establishes a closed cooling path as follows:

a. A minimum of two ADS valves (dc Division 2) are powered open.
b. Either of the following cooling paths are established:
   1. Using RHR loop B, water from the suppression pool is pumped through the RHR heat exchanger (where a portion of the decay heat is removed) into the reactor vessel. The cooled suppression pool water flows through the vessel (picking up a portion of the decay heat) out the ADS valves and back to the suppression pool. This alternate cooling path is shown in Figure 15.2-12.
   2. Using RHR loops B and C together, water is taken from the suppression pool and pumped directly into the reactor vessel. The water passes through the vessel (picking up decay heat) and out the ADS valves returning to the suppression pool as shown in Figure 15.2-13. Suppression pool water is then cooled by operation of RHR loop B in the pool cooling mode (see Figure 15.2-14). In this alternate cooling path, RHR loop C is used for injection and RHR loop B for cooling. Cold shutdown is achieved approximately 36 hr after the transient occurs.

ACTIVITY C2 (Division 2 fails, Division 1 available) (Figure 15.2-15)
System pressure =100 psig
System temperature = 330°F

Operator Actions

The operator establishes a closed cooling path as follows:

a. A minimum of two ADS valves (dc Division 1) are powered open, and
b. Using RHR loop A instead of loop B, an alternate cooling path is established as shown in Activity C1. Cold shutdown is reached in approximately 15 hr.

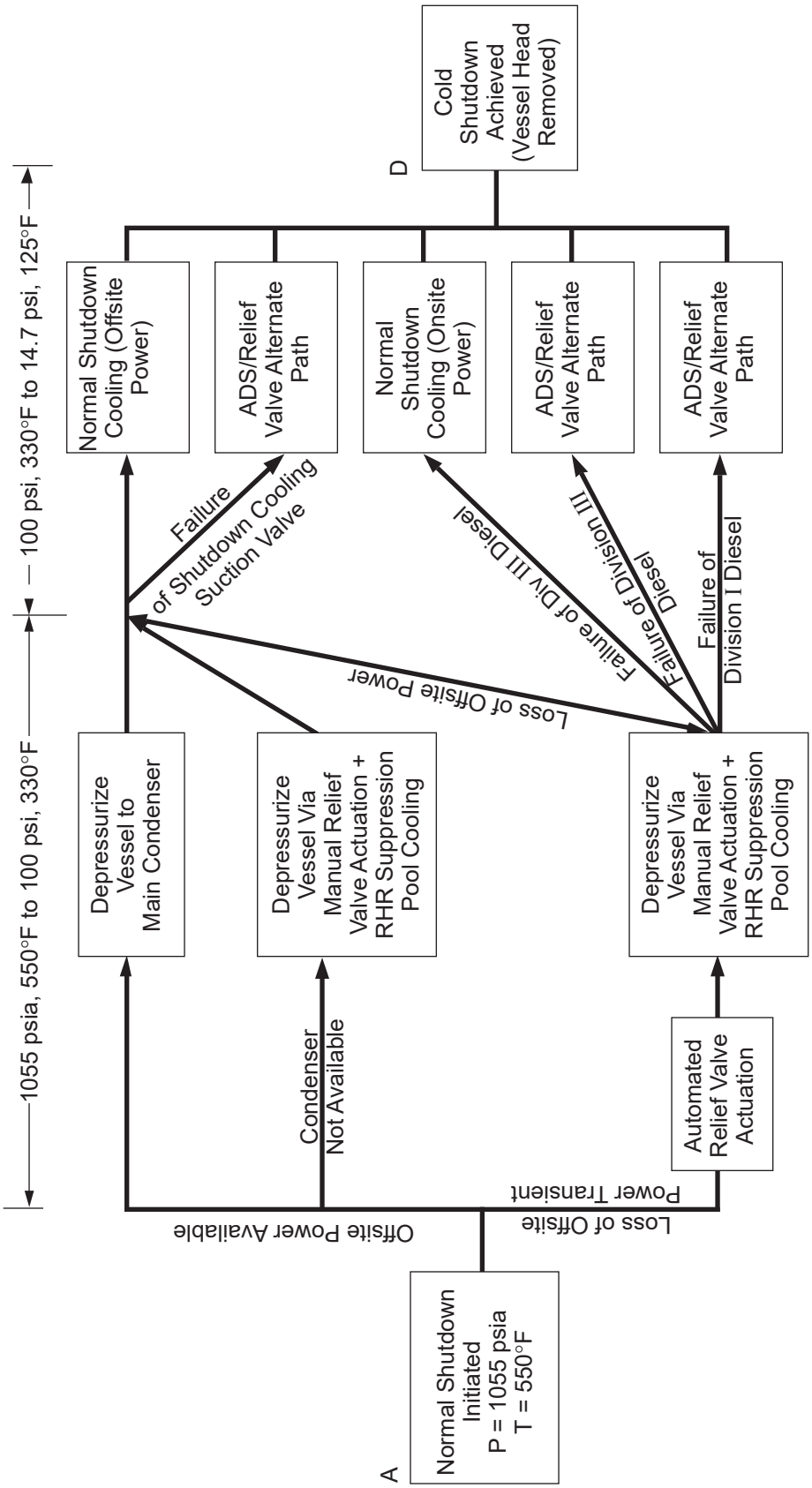

Columbia Generating Station Final Safety Analysis Report	Summary of Paths Available to Achieve Cold Shutdown		
	Draw. No. 900547.64	Rev.	Figure 15.2-11

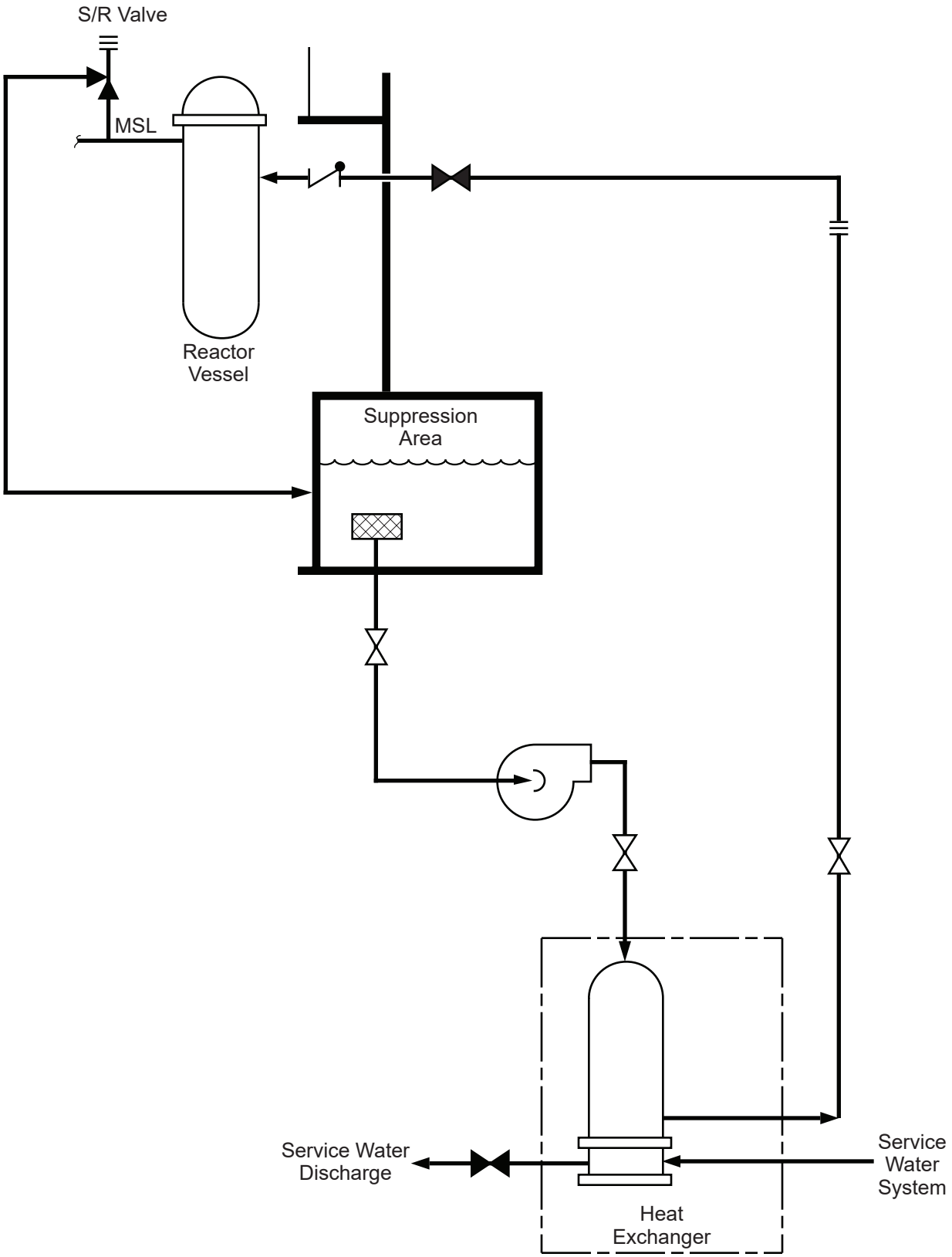

Columbia Generating Station **Final Safety Analysis Report**	**Activity C1 Alternate Shutdown Cooling Path Utilizing Residual Heat Removal Loop B**		
	Draw. No. **900547.65**	Rev.	Figure **15.2-12**

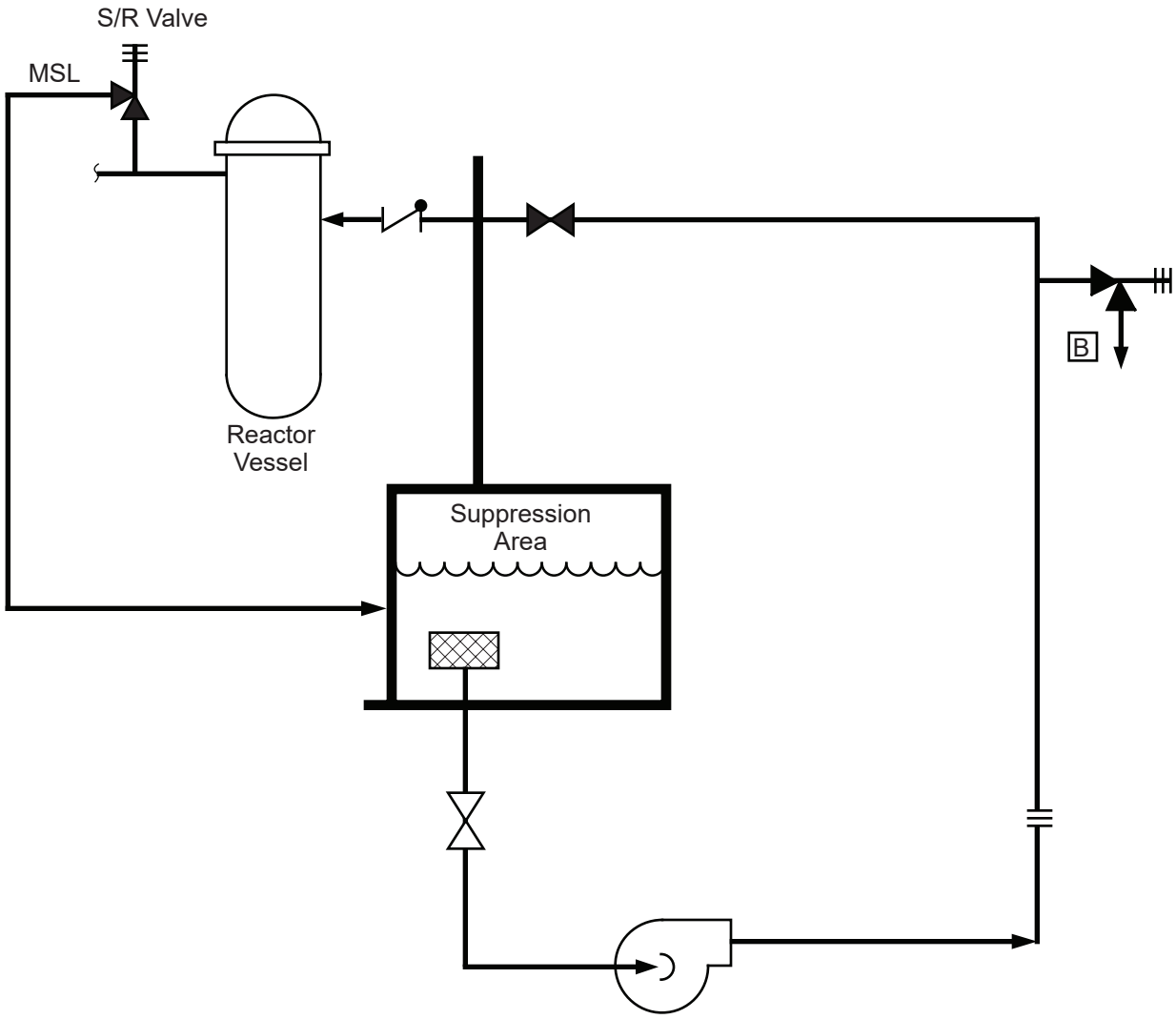

Columbia Generating Station Final Safety Analysis Report	Residual Heat Removal Loop C		
	Draw. No. 900547.66	Rev.	Figure 15.2-13

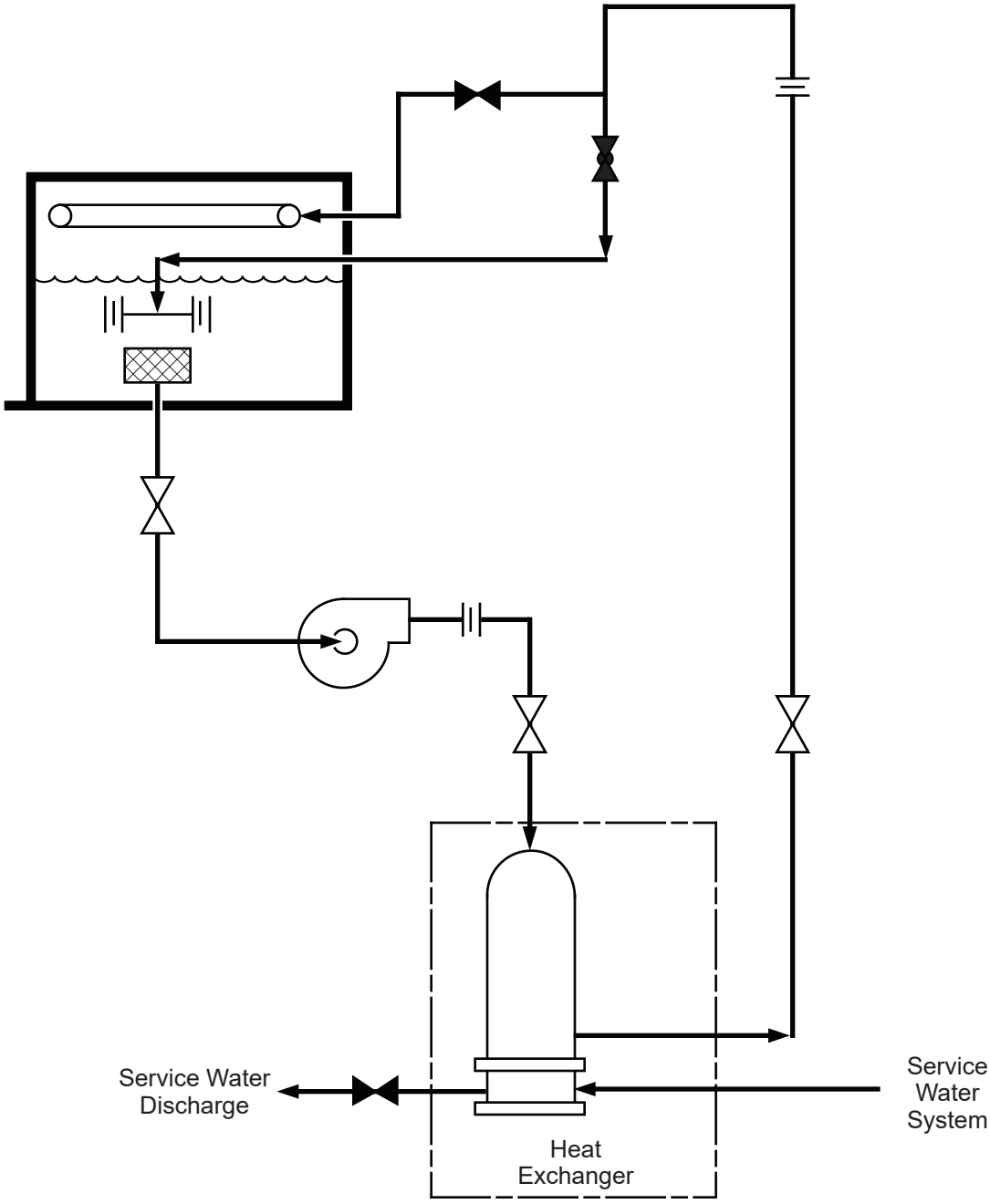

Columbia Generating Station Final Safety Analysis Report	Residual Heat Removal Loop A(B) (Suppression Pool Cooling/ Rated Pump Flow Test Mode)		
	Draw. No. 900547.67	Rev.	Figure 15.2-14

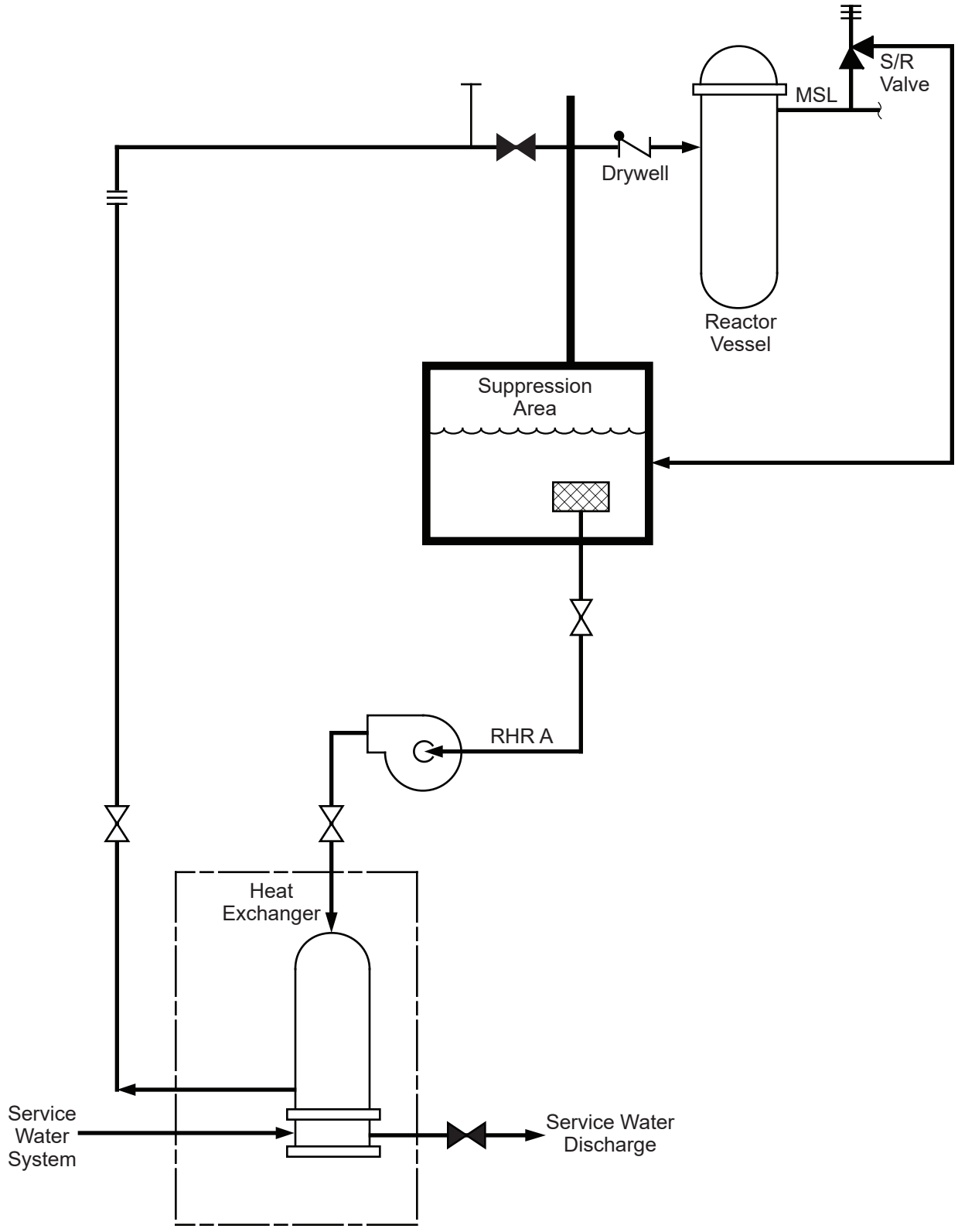

Columbia Generating Station Final Safety Analysis Report	Activity C2 Alternate Shutdown Cooling Path Utilizing Residual Heat Removal Loop A		
	Draw. No. 900547.68	Rev.	Figure 15.2-15

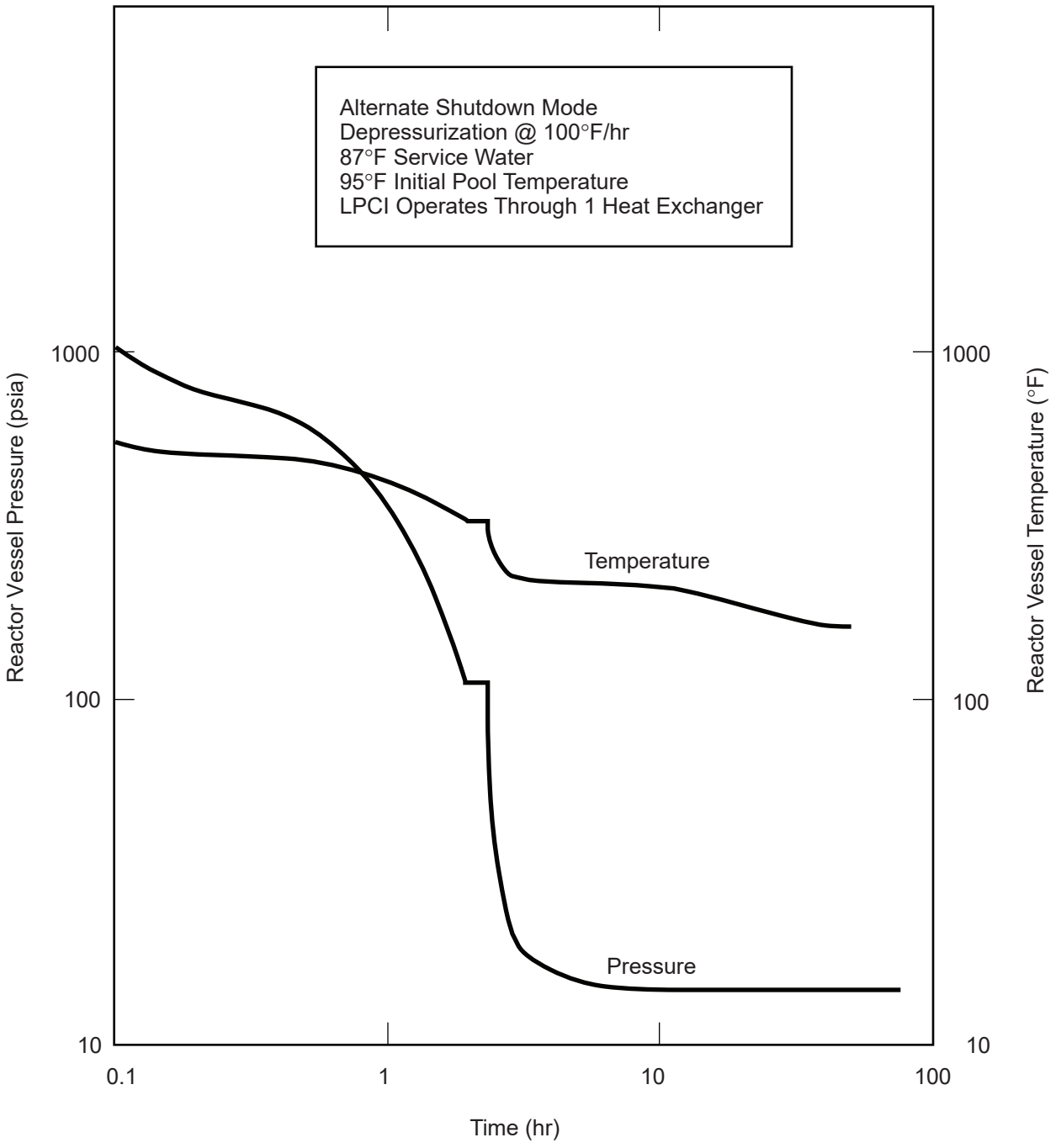

Columbia Generating Station Final Safety Analysis Report	Vessel Temperature and Pressure Versus Time (Activity C1.b.1 or C2)		
	Draw. No. 900547.69	Rev.	Figure 15.2-16

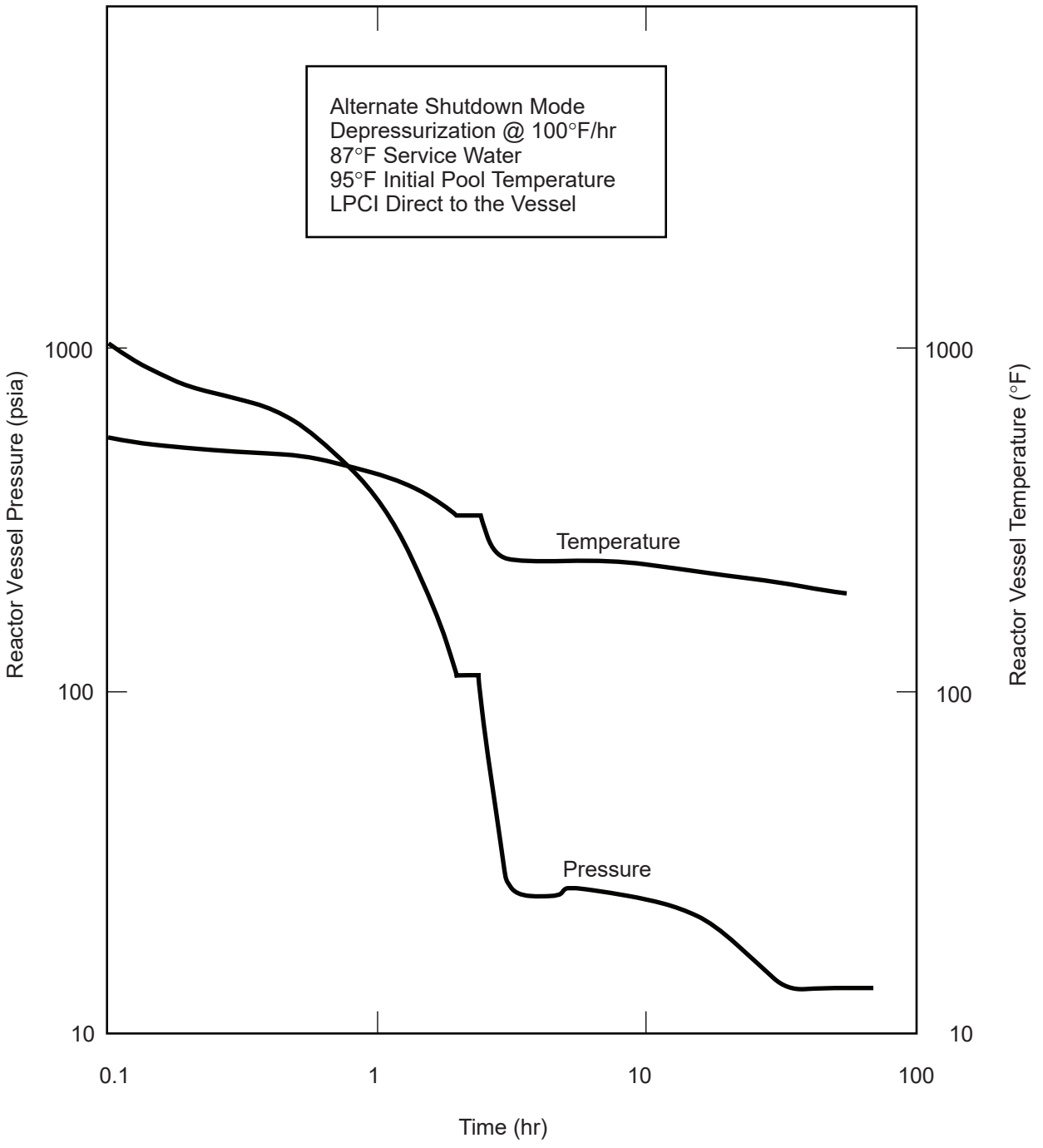

Columbia Generating Station Final Safety Analysis Report	Vessel Temperature and Pressure Versus Time (Activity C1.b.2)		
	Draw. No. 900547.70	Rev.	Figure 15.2-17

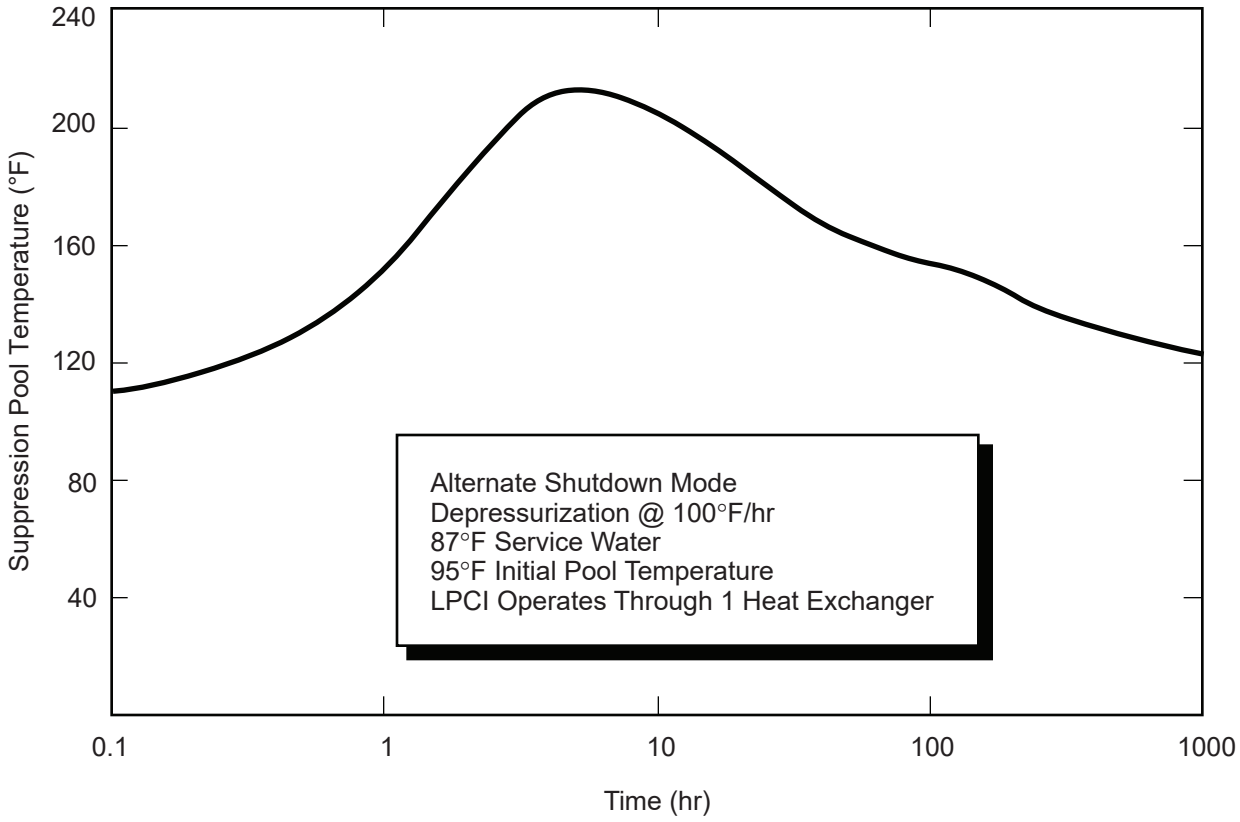

Columbia Generating Station Final Safety Analysis Report	Suppression Pool Temperature Versus Time (with 87°F Service Water Temperature) (Activity C1.b.1 or C2)		
	Draw. No. 900547.71	Rev.	Figure 15.2-18

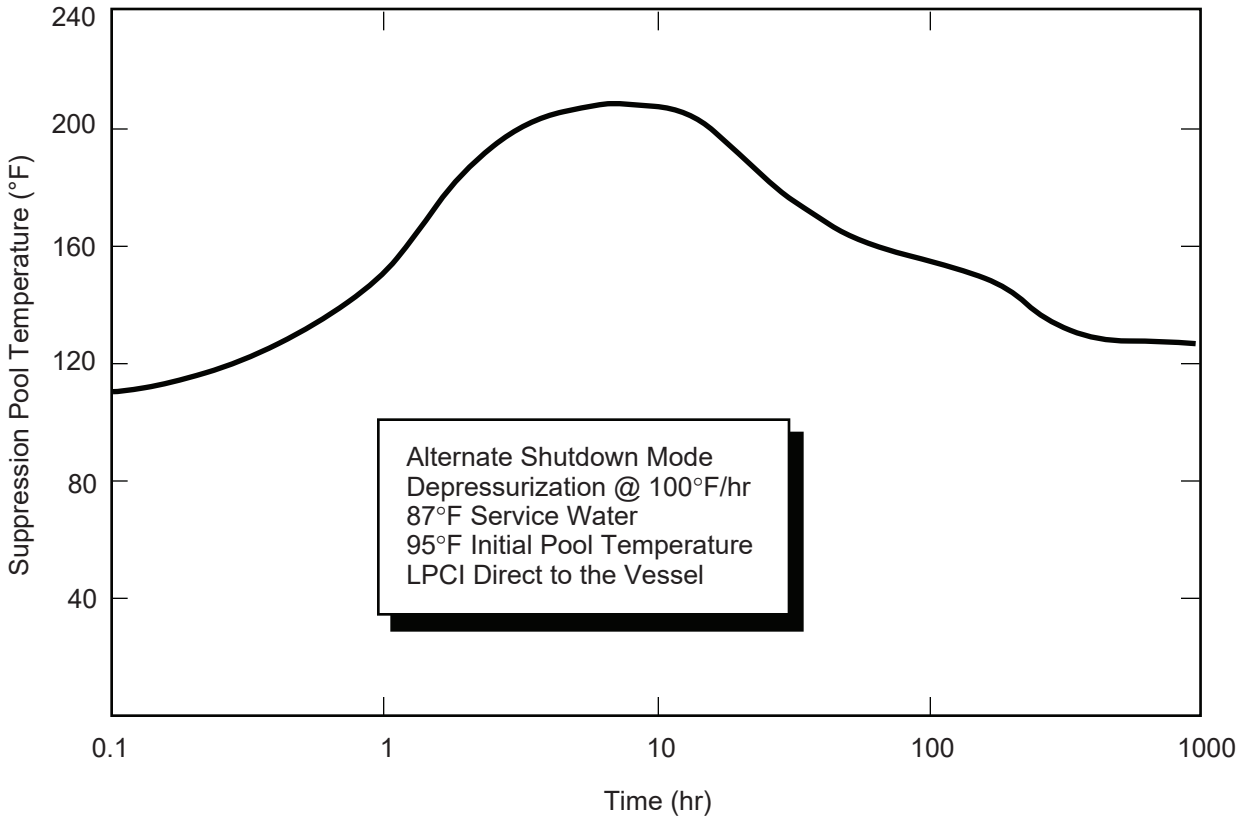

Columbia Generating Station **Final Safety Analysis Report**	**Suppression Pool Temperature Versus Time (with 87°F Service Water Temperature) (Activity C1.b.2)**		
	Draw. No. **900547.72**	Rev.	Figure **15.2-19**

15.3 DECREASE IN REACTOR COOLANT SYSTEM FLOW RATE

15.3.1 RECIRCULATION PUMP TRIP

The events for two-recirculation pump operation are not limiting, therefore, the analyses have not been updated since the reactor power uprate analyses.

15.3.1.1 Identification of Causes and Frequency Classification

15.3.1.1.1 Identification of Causes

Recirculation pump motor operation can be tripped by design and by random operational failures. Design tripping will occur in response to:

a. Reactor vessel water level L2 setpoint trip,
b. Turbine control (governor) valve fast closure or stop (throttle) valve closure,
c. Failure to scram high pressure setpoint trip,
d. Motor branch circuit over-current protection,
e. Motor overload protection, and
f. Suction block valve not fully open.

Random tripping will occur in response to:

a. Operator error,

b. Loss of electrical power source to the pumps, and

c. Equipment or sensor failures and malfunctions which initiate the above intended trip response.

15.3.1.1.2 Frequency Classification

15.3.1.1.2.1 Trip of One Recirculation Pump. This event is categorized as an incident of moderate frequency.

15.3.1.1.2.2 Trip of Two Recirculation Pumps. This event is categorized as an incident of moderate frequency.

15.3.1.2 Sequence of Events and Systems Operation

15.3.1.2.1 Sequence of Events

15.3.1.2.1.1 Trip of One Recirculation Pump. Table 15.3-1 lists the sequence of events for Figure 15.3-1.

15.3.1.2.1.2 Trip of Two Recirculation Pumps. Table 15.3-2 lists the sequence of events for Figure 15.3-2.

15.3.1.2.2 Systems Operation

15.3.1.2.2.1 Trip of One Recirculation Pump. Tripping a single recirculation pump requires no protection system or safeguard system operation. This analysis assumes normal functioning of plant instrumentation and controls.

15.3.1.2.2.2 Trip of Two Recirculation Pumps. Analysis of this event assumes normal functioning of plant instrumentation and controls and plant and reactor protection systems.

Specifically, this transient takes credit for vessel level (L8) instrumentation to trip the turbine. Reactor shutdown relies on scram trips from the turbine stop (throttle) valves. High system pressure is limited by the pressure relief valve system operation.

15.3.1.2.3 The Effect of Single Failures and Operator Errors

15.3.1.2.3.1 Trip of One Recirculation Pump. None

15.3.1.2.3.2 Trip of Two Recirculation Pumps. Table 15.3-2 lists the vessel level (L8) trip event as the first response to initiate corrective action in this transient and it is intended to prohibit moisture carryover to the main turbine. Multiple level sensors are used to sense and detect when the water level reaches the L8 setpoint. At this point, a single failure will neither initiate nor impede a turbine trip signal. Turbine trip signal transmission circuitry, however, is not built to single failure criterion. At this point the transient event is functionally over.

Scram trip signals from the turbine are designed such that a single failure will neither initiate nor impede a reactor scram trip initiation.

15.3.1.3 Core and System Performance

15.3.1.3.1 Mathematical Model

The point-kinetics REDY model described in Section 15.0.3.3.1 is used to simulate this event.

15.3.1.3.2 Input Parameters and Initial Conditions

These analyses have been performed, unless otherwise noted, with plant conditions in Table 15.0-2.

Pump motors and pump rotors are simulated with minimum specified rotating inertias.

15.3.1.3.3 Results

15.3.1.3.3.1 Trip of One Recirculation Pump. Figure 15.3-1 shows the response of the reactor system following the trip of one recirculation pump motor. Initially a recirculation pump is tripped in one loop, causing the core inlet flow to decrease, while the other recirculation loop flow increases. Subsequently jet pump diffuser flow reverses in the tripped recirculation loop. At approximately 45 sec the reactor reaches a new equilibrium operating point, at approximately 73.8% power and 57% core flow. During the transient, level swell is not sufficient to cause turbine trip.

15.3.1.3.3.2 Trip of Two Recirculation Pumps. Figure 15.3-2 shows the response of the reactor system following the trip of both recirculation pump motors. Initially both recirculation pumps are tripped, causing the core inlet flow to decrease, while vessel level rises until both main and feedwater turbines trip on high level (L8). A reactor scram is subsequently initiated at 90% turbine stop valve position. Shortly after the scram is initiated the stop valves close and the bypass valves open to regulate pressure. At this point the transient event is functionally over.

15.3.1.3.4 Consideration of Uncertainties

Initial conditions chosen for these analyses are conservative and tend to force analytical results to be more severe than expected under actual plant conditions.

Actual pump and pump-motor drive line rotating inertias are expected to be somewhat greater than the minimum design values assumed in this simulation. Actual plant deviations regarding inertia are expected to lessen the severity as analyzed. Minimum design inertias were used as well as the least negative void coefficient since these maximize the flow reduction.

15.3.1.4 Barrier Performance

15.3.1.4.1 Trip of One Recirculation Pump

Figure 15.3-1 results indicate a basic reduction in system pressures from the initial conditions. Therefore, the reactor coolant pressure boundary (RCPB) barrier is not impacted.

15.3.1.4.2 Trip of Two Recirculation Pumps

The results shown in Figure 15.3-2 indicate peak pressures stay well below the limit allowed by the applicable American Society of Mechanical Engineers (ASME) code. Therefore, the RCPB barrier is not impacted.

15.3.1.5 Radiological Consequences

The consequence of this event does not result in fuel failure. It does result in the discharge of normal coolant activity to the suppression pool by means of safety/relief valve (SRV) operation, which is contained in the primary containment. This event does not result in an uncontrolled release to the environment, so the plant operator can choose to hold the activity in containment or discharge it when conditions permit. If purging of the containment is chosen, the release will be in accordance with established requirements.

15.3.2 RECIRCULATION FLOW CONTROL FAILURE - DECREASING FLOW

15.3.2.1 Identification of Causes and Frequency Classification

15.3.2.1.1 Identification of Causes

A postulated failure of the input demand signal, which is used in both loops, can decrease core flow at the maximum ramp demand rate established by the adjustable speed drive (ASD) control. Failure within either loop controller can result in a maximum ramp demand rate as limited by the ASD control.

15.3.2.1.2 Frequency Classification

This event is categorized as an incident of moderate frequency.

15.3.2.2 Sequence of Events and Systems Operation

15.3.2.2.1 Sequence of Events

15.3.2.2.1.1 Speed Decrease of One Recirculation Pump. Table 15.3-3 lists the sequence of events for Figure 15.3-3.

15.3.2.2.1.2 Speed Decrease of Two Recirculation Pumps. Table 15.3-4 lists the sequence of events for Figure 15.3-4.

15.3.2.2.2 Systems Operation

15.3.2.2.2.1 Speed Decrease of One Recirculation Pump. The most severe control system disturbance is a failure that causes the ASD internal controller to move at its maximum rate. Such transients may be obtained by instantaneous failure of a controller output into its upper or lower limits. Originally the recirculation flow was controlled by valve motion. For the current analysis the recirculation flow control valves have been locked at the full open position, and ASD units have been implemented to provide the necessary flow control.

15.3.2.2.2.2 Speed Decrease of Two Recirculation Pumps. The most severe control system disturbance is a failure that causes the ASD internal controller to move at its maximum rate. Such transients may be obtained by instantaneous failure of a controller output into its upper or lower limits. The independent and simultaneous failure of each individual loop controller would be highly improbable.

Thus, for the two loop controller failure event, the ASD internal controller is assumed to move at its maximum rate in both recirculation loops. Originally the recirculation flow was controlled by valve motion. For the current analysis the recirculation flow control valves have been locked at the full open position, and ASD units have been implemented to provide the necessary flow control.

15.3.2.2.3 The Effect of Single Failures and Operator Errors

The single failure and operator considerations for this event are essentially the same as in Section 15.3.1.2.3.2. The speed decrease of two instead of one recirculation pump would be the envelope case for the additional single component failure or operator error.

15.3.2.3 Core and System Performance

15.3.2.3.1 Mathematical Model

The point-kinetics REDY model described in Section 15.0.3.3.1 is used to simulate these transient events.

15.3.2.3.2 Input Parameters and Initial Conditions

These analyses have been performed, unless otherwise noted, with plant conditions listed in Table 15.0-2.

15.3.2.3.2.1 Speed Decrease of One Recirculation Pump. For the simulation of this event, a controller malfunction causes a zero demand signal to be sent to one of the recirculation ASD units, while the plant is operating at 104.5% uprated power and 100% core flow. A control demand error (low) signal causes the ASD to adjust the recirculation pump speed demand rate

limit downward at an assumed rate of 25%/sec for one loop failure. The ensuing transient is similar to a recirculation pump trip.

15.3.2.3.2.2 Speed Decrease of Two Recirculation Pumps. For the simulation of this event, a controller malfunction causes a zero demand signal to be sent to both of the recirculation ASD units, while the plant is operating at 104.5% uprated power and 100% core flow. A control demand error (low) can cause the ASD units to adjust the recirculation pump speed downward in both loops at the 5%/sec pump speed rate limit.

15.3.2.3.3 Results

15.3.2.3.3.1 Speed Decrease of One Recirculation Pump. Figure 15.3-3 shows the response of the plant for this transient. Initially a negative recirculation pump speed demand is sent to the ASD due to a postulated controller failure. The negative pump speed demand causes the diffuser flow to decrease, and eventually reverse, in the failed loop. At the same time the active loop increases flow to compensate for the failed recirculation loop. At approximately 45 sec the reactor reaches a new equilibrium operating point, at approximately 72.8% power and 57% core flow. During the transient, level swell is not sufficient to cause turbine trip which would result in a reactor scram.

15.3.2.3.3.2 Speed Decrease of Two Recirculation Pumps. Figure 15.3-4 shows the response of the plant to this transient using the 5%/sec pump speed demand rate limit. Initially, a negative recirculation pump speed demand is sent to both ASD units due to a postulated controller failure. The negative pump speed demand causes the diffuser flows to decrease in the failed loops. During the transient, level swell is not sufficient to cause turbine trip which would result in a reactor scram.

15.3.2.3.4 Consideration of Uncertainties

Initial conditions chosen for these analyses are conservative and tend to force analytical results to be more severe than expected under actual plant conditions.

These analyses are unaffected by deviations in pump/pump motor and driveline inertias since it is the ASD controller that causes rapid recirculation decreases.

15.3.2.4 Barrier Performance

15.3.2.4.1 Speed Decrease of One Recirculation Pump

The pressure in the vessel dome is well below the vessel pressure limit. The event does not result in a temperature or pressure transient in excess of the criteria for which the fuel, pressure vessel, or containment are designed. Therefore, barrier integrity and function is maintained.

15.3.2.4.2 Speed Decrease of Two Recirculation Pumps

The pressure in the vessel dome is well below the vessel pressure limit. The event does not result in a temperature or pressure transient in excess of the criteria for which the fuel, pressure vessel, or containment are designed and these barriers maintain their integrity and function as designed.

15.3.2.5 Radiological Consequences

Since this event does not result in any fuel failures or any release of primary coolant to either the secondary containment or to the environment there are no radiological consequences associated with this event.

15.3.3 RECIRCULATION PUMP SEIZURE

The pump seizure accident for single loop operation (SLO) is analyzed for the introduction of GNF2 fuel into the Columbia reactor core.

15.3.3.1 Identification of Causes and Frequency Classification

The case of recirculation pump seizure represents the extremely unlikely event of instantaneous stoppage of the pump motor shaft of one recirculation pump. This event produces a very rapid decrease of core flow as a result of the large hydraulic resistance introduced by the stopped rotor. The sudden decrease in core coolant flow while the reactor is at full power results in a degradation of core heat transfer which could result in fuel damage.

The event is categorized as an infrequent incident when operating with two recirculation pumps in service. For single loop operation, this event is considered to be a limiting fault, but is analyzed as an incident of moderate frequency for Global Nuclear Fuel reloads.

15.3.3.2 Sequence of Events and Systems Operation

15.3.3.2.1 Sequence of Events

Table 15.3-5 lists the sequence of events for Figure 15.3-5, for two loop operation. Table 15.3-6 lists the typical sequence of events for the recirculation pump seizure accident during SLO.

Identification of Operator Actions

The operator must verify that the reactor scrams with the turbine trip resulting from reactor water level swell. The operator should regain control of reactor water level through RCIC

operation or by restart of a feedwater pump, and must monitor reactor water level and pressure control after shutdown.

15.3.3.2.2 Systems Operation

In order to properly simulate the expected sequence of events, the analysis of this event assumes normal functioning of plant instrumentation and controls, plant protection, and reactor protection systems.

Operation of safe shutdown features, including operation of the HPCS and RCIC systems though not included in this simulation, may be used to maintain adequate water level.

15.3.3.2.3 The Effect of Single Failures and Operator Errors

Single failures in the scram logic originating by means of the high vessel level (L8) trip are similar to the considerations in Section 15.3.1.2.3.2.

15.3.3.3 Core and System Performance

15.3.3.3.1 Mathematical Model

The point-kinetics REDY model described in Section 15.0.3.3.1 is used to simulate this event for two loop operation. The computer model described in Reference 15.3-2 was used to simulate this event for SLO.

15.3.3.3.2 Input Parameters and Initial Conditions

This analysis has been performed for two loop operation, unless otherwise noted, with plant conditions tabulated in Table 15.0-2, column "REDY (ASD Events)". For the simulation of the event while in two loop operation, one recirculation pump was seized instantaneously (pump speed set to zero) while the plant is operating at 104.5% uprated power and 100% core flow.

For single loop operation, the analysis has been performed, unless otherwise noted, with plant conditions tabulated in Table 15.0-2A, column "Original Rated Power". For the purpose of evaluating consequences to the fuel thermal limits, this transient event is assumed to occur as a consequence of an unspecified, instantaneous stoppage of the active recirculation pump shaft while the reactor is operating at 73.8% NBR power under SLO. Also, the reactor is assumed to be operating at thermally-limiting conditions. The void coefficient is adjusted to the most conservative value, that is, the least negative value in Table 15.0-2A.

15.3.3.3.3 Results

Figure 15.3-5 presents the results of the accident for two loop operation. Table 15.3-5 shows the sequence of events for this transient. Initially a recirculation pump is seized in one loop causing the flow in the seized loop to reverse and the flow in the active loop to increase. As the flow in the seized loop decreases, the vessel level rises until a turbine trip is initiated on high level, L8. Once L8 is reached, both feedwater pumps trip. A reactor scram is subsequently initiated due to 90% turbine stop (throttle) valve position. Shortly after the turbine trip is initiated the stop valves close and the bypass valves open to regulate pressure. Simultaneously the active recirculation loop trips due to the turbine trip. The MCPR does not decrease significantly before fuel surface heat flux begins dropping enough to restore greater thermal margins. After the time at which MCPR occurs, heat flux decreases more rapidly than the rate at which heat is removed by the coolant and the ΔCPR is less than 0.01.

Figure 15.3-6 presents the results of the event in SLO. Core coolant flow drops rapidly, reaching a minimum value of 25% rated at about 2.0 sec.

The RRC pump seizure while in SLO is more limiting than the RRC pump seizure in two loop operation. See Table 15.0-1A.

15.3.3.3.3.1 Considerations of Uncertainties. Considerations of uncertainties are included in the analysis.

15.3.3.4 Barrier Performance

The bypass valves open to limit the pressure well within the range allowed by the ASME vessel code. The RCPB is not impacted by overpressure. Therefore, barrier integrity and function is maintained.

15.3.3.5 Radiological Consequences

Since this event does not result in any fuel failures or any release of primary coolant to either the secondary containment or to the environment there are no radiological consequences associated with this event.

15.3.4 RECIRCULATION PUMP SHAFT BREAK

15.3.4.1 Identification of Causes and Frequency Classification

The breaking of the shaft of a recirculation pump is considered a design basis accident event. It has been evaluated as a mild accident in relation to other design basis accidents such as the loss-of-coolant accident. The analysis has been conducted with consideration to a single or

two loop operation. Two loop operation represents the worst case since single loop operation is limited to approximately 73.8% power.

This postulated event is bounded by the more limiting case of recirculation pump seizure.

15.3.4.1.1 Identification of Causes

The case of recirculation pump shaft breakage represents the unlikely event of rapid stoppage of the pump operation of one recirculation pump. This event produces a rapid decrease of core flow.

15.3.4.1.2 Frequency Classification

This event is categorized as an incident of infrequent frequency.

15.3.4.2 Sequence of Events and Systems Operation

15.3.4.2.1 Sequence of Events

A postulated instantaneous break of the pump motor shaft of one recirculation pump as discussed in Section 15.3.4.1.1 will cause the core flow to decrease rapidly resulting in water level swell in the reactor vessel. When the vessel water level reaches the high water level setpoint (Level 8), a main turbine trip and feedwater pump trip will be initiated.

A reactor scram and the remaining recirculation pump trip will be initiated due to the turbine trip. Eventually the vessel water level will be controlled by HPCS and/or RCIC flow.

15.3.4.2.2 Systems Operation

Normal operation of plant instrumentation and control is assumed. This event takes credit for vessel water level (Level 8) instrumentation to scram the reactor and trip the main turbine and feedwater pumps. High system pressure is limited by the pressure relief system operation.

Operation of HPCS and/or RCIC is expected in order to maintain adequate water level control.

15.3.4.2.3 The Effect of Single Failures and Operator Errors

Effects of single failures in the high vessel level (L8) trip are similar to the considerations in Section 15.3.1.2.3.2.

Assumption of single component failure or operator error in other equipment has been examined and this has led to the conclusion that no other credible failure exists for this event. Therefore, the bounding case has been considered.

15.3.4.3 Core and System Performance

The pump shaft break event is bounded by the pump seizure event. Since this event is less limiting than that event, only qualitative evaluation is provided. Therefore, no discussion of mathematical model, input parameters, and consideration of uncertainties, etc., is necessary.

15.3.4.3.1 Qualitative Results

If this unlikely event occurs, core coolant flow will drop rapidly. The level swell produces a trip of the main and feedwater turbines. A scram is initiated due to turbine trip. Since heat flux decreases more rapidly than the rate at which heat is removed by the coolant, there is no impact on thermal limits. Additionally, the bypass valves and the potential for a momentary opening of some of the SRVs limit the pressure well within the range allowed by the ASME vessel code. Therefore, the RCPB is not impacted by overpressure.

The severity of this pump shaft break event is bounded by the pump seizure event. In either of these two events, the recirculation drive flow of the affected loop decreases rapidly.

In the case of the pump seizure event, the loop flow decreases faster than the normal flow coastdown as a result of the large hydraulic resistance introduced by the stopped rotor. For the pump shaft break event, the hydraulic resistance caused by the broken pump shaft is less than that of the stopped rotor for the pump seizure event. Therefore, the core flow decrease following a pump shaft break effect is slower than the pump seizure event. Thus, it can be concluded that the potential effects of the hypothetical pump shaft break accident are bounded by the effects of the pump seizure event.

15.3.4.4 Barrier Performance

The bypass valves and momentary opening of some of the SRVs limit the pressure well within the range allowed by the ASME vessel code. Therefore, the RCPB is not impacted by overpressure.

15.3.4.5 Radiological Consequences

Since this event does not result in any fuel failures or any release of primary coolant to either the secondary containment or to the environment there are no radiological consequences associated with this event.

15.3.5 REFERENCES

15.3-1 General Electric Company, "WNP-2 Power Uprate Transient Analysis Task Report," GE-NE-208-08-0393, September 1993.

15.3-2 NEDC-24154-P-A, "Qualification of the One-Dimensional Core Transient Model for Boiling Water Reactors," Volumes 1, 2, 3 and 4, February 2000.

15.3-3 Advanced Nuclear Fuels Corporation, "WNP-2 Single Loop Operation Analysis," ANF-87-119, September 1987.

Table 15.3-1

Sequence of Events for Figure 15.3-1

Trip of One Recirculation Pump Motor
Uprated Power

Time (sec)	Event
0	Trip of one recirculation pump initiated.
9	Jet pump diffuser flow reverses in the tripped loop.
45[a]	Core flow and power level stabilize at new equilibrium conditions.

[a] Approximately.

Table 15.3-2

Sequence of Events for Figure 15.3-2

Trip of Both Recirculation Pump Motors
Uprated Power

Time (sec)	Event
0	Trip of both recirculation pumps initiated.
5.66	Vessel water level (L8) trip initiates turbine trip.
5.66	Feedwater pumps are tripped off.
5.67	Main turbine stop (throttle) valves reach 90% open position and initiate reactor scram trip.
5.76	Turbine bypass valves open.

Table 15.3-3

Sequence of Events for Figure 15.3-3

Recirculation Flow Control Failure
Decreasing Flow in One Loop
Uprated Power

Time (sec)	Event
0	Initiate fast down scale of recirculation pump speed in one loop.
4[a]	Jet pump diffuser flow reverses in the affected loop.
45[a]	Core flow and power level stabilize at new equilibrium conditions.

[a] Approximately.

Table 15.3-4

Sequence of Events for Figure 15.3-4

Recirculation Flow Control Failure
Decreasing Flow in Both Loops (5%/sec)
Uprated Power

Time (sec)	Event
0	Initiate 5%/sec down scale of recirculation pump speed in both loops.
85[a]	Core flow and power level stabilize at new equilibrium conditions.

Table 15.3-5

Sequence of Events for Figure 15.3-5

One Recirculation Pump Seizure
Uprated Power

Time (sec)	Event
0	Seizure of one recirculation pump initiated.
1[a]	Jet pump diffuser flow reverses in the seized loop.
4.40	Vessel water high level (L8) trip initiates a turbine trip.
4.40	Feedwater pumps are tripped off.
4.41	Main turbine stop (throttle) valves reach 90% open position and initiate reactor scram.
4.59	Active recirculation loop trips due to previous turbine trip.

[a] Approximately.

Table 15.3-6

Sequence of Events for Pump Seizure
(for Single Loop Operation)

Time (sec)	Event
0.0	Recirculation pump motor trip off complete Single pump seizure was initiated; core flow decreases
~1.9	Reverse flow ceases in the idle loop
~6.0	Power and flow stabilize

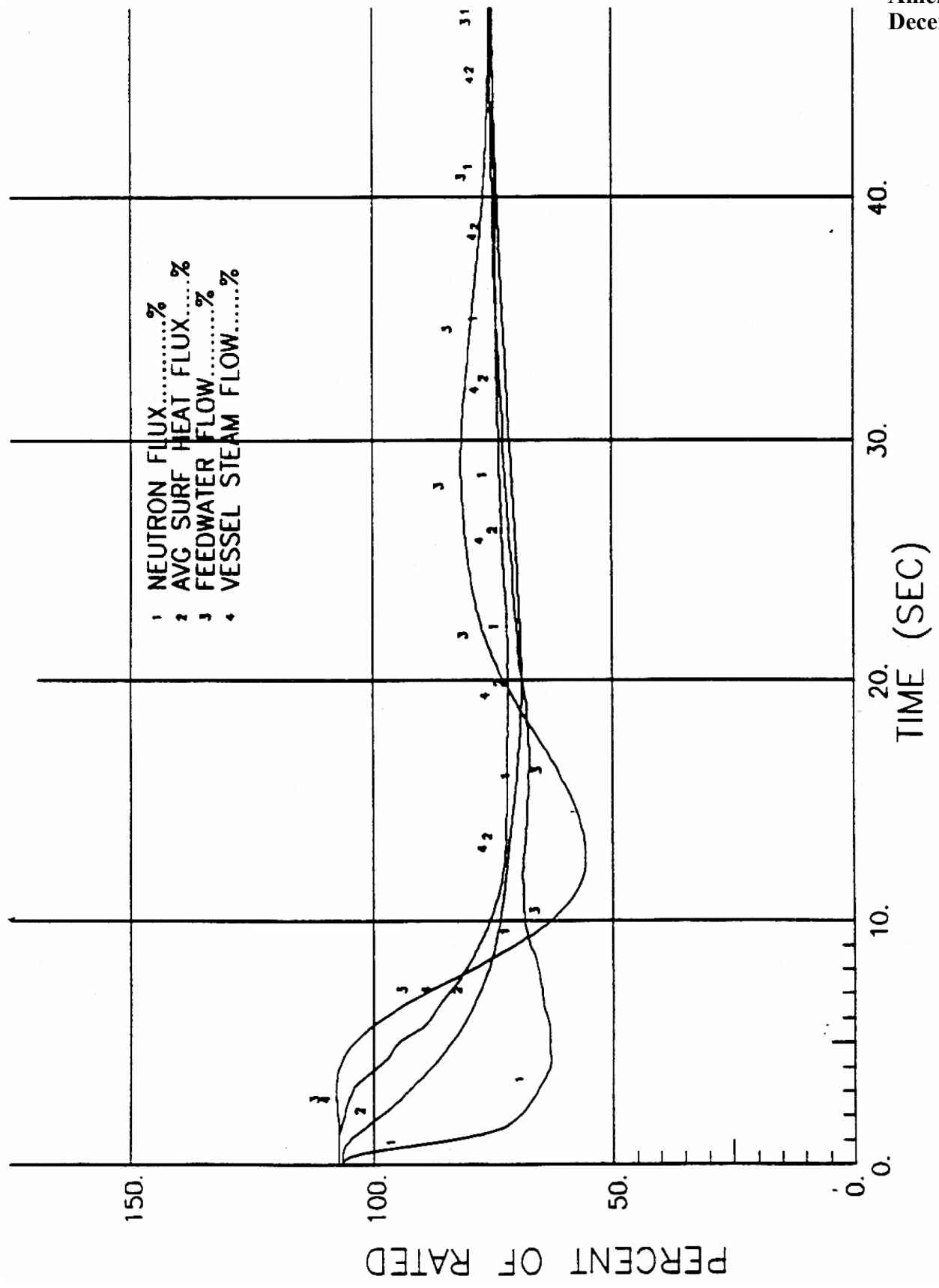

*% Uprated power (RTP) is based on 3544 MWt. Curves as shown are originally based on 3486 MWt.

Columbia Generating Station Final Safety Analysis Report	One Recirculation Pump Trip at 104.5*% Uprated Power, 100% Flow		
	Draw. No. 020361.77	Rev.	Figure 15.3-1.1

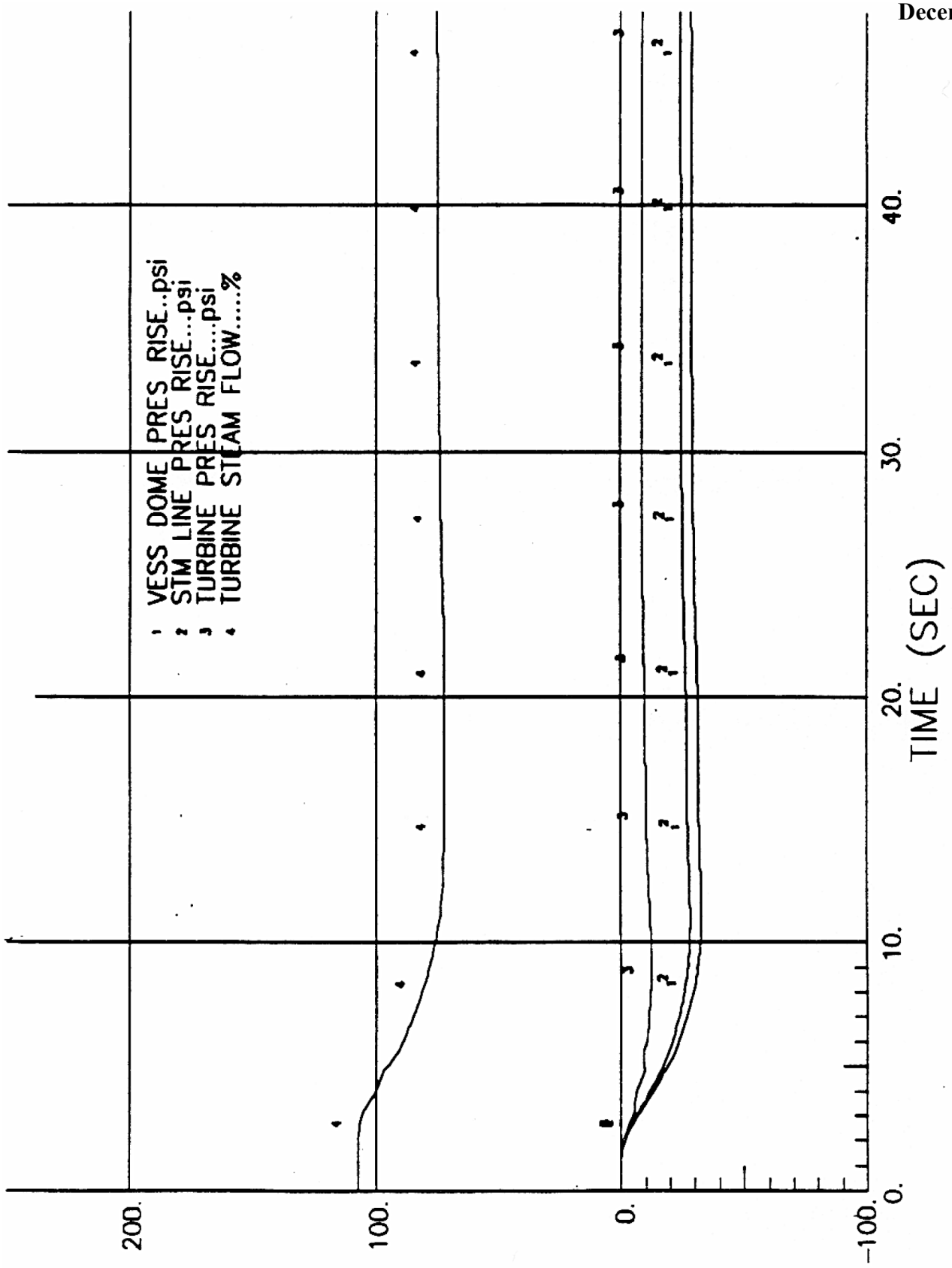

*% Uprated power (RTP) is based on 3544 MWt. Curves as shown are originally based on 3486 MWt.

Columbia Generating Station Final Safety Analysis Report	One Recirculation Pump Trip at 104.5*% Uprated Power, 100% Flow		
	Draw. No. 020361.78	Rev.	Figure 15.3-1.2

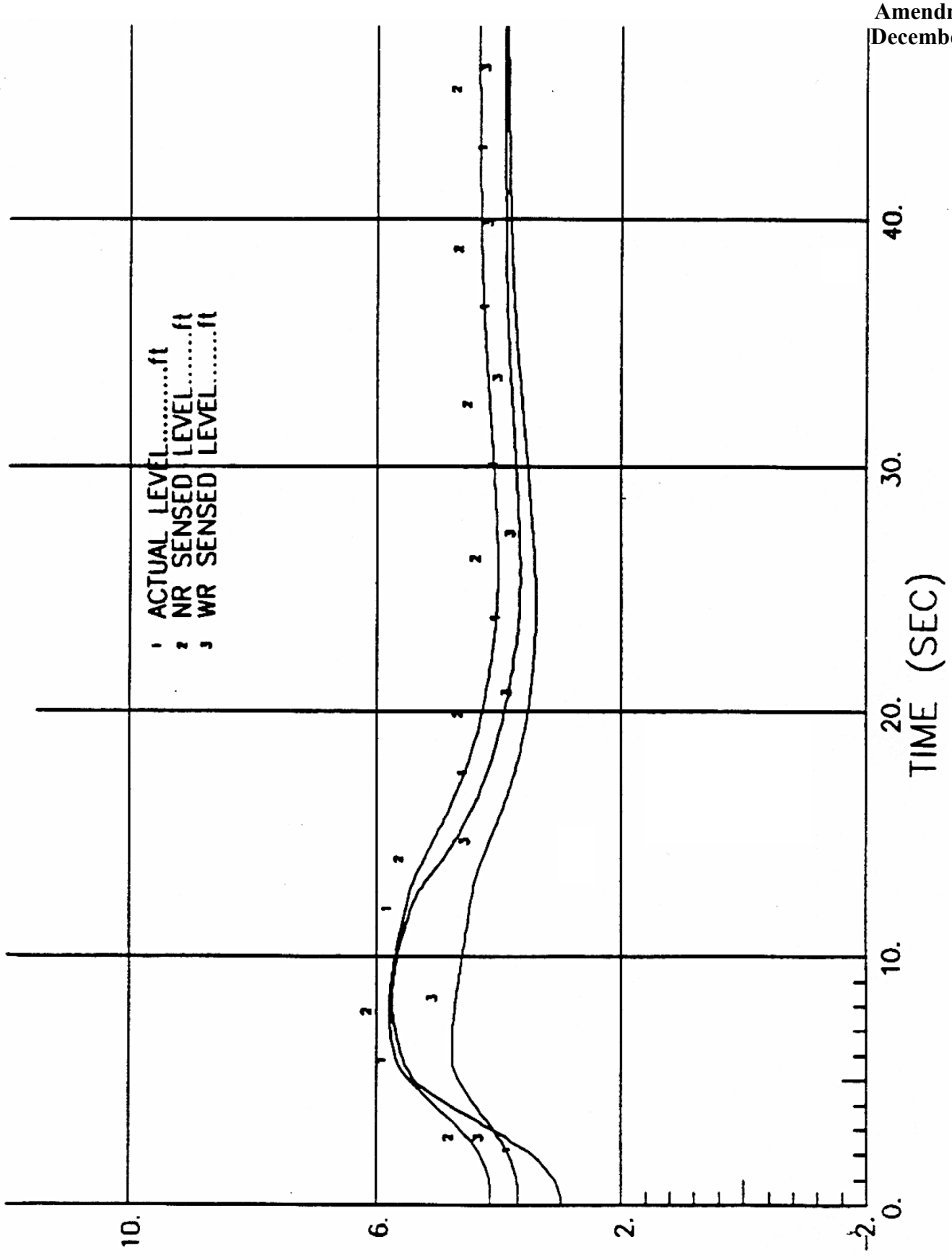

*% Uprated power (RTP) is based on 3544 MWt. Curves as shown are originally based on 3486 MWt.

Columbia Generating Station Final Safety Analysis Report	One Recirculation Pump Trip at 104.5*% Uprated Power, 100% Flow		
	Draw. No. 020361.79	Rev.	Figure 15.3-1.3

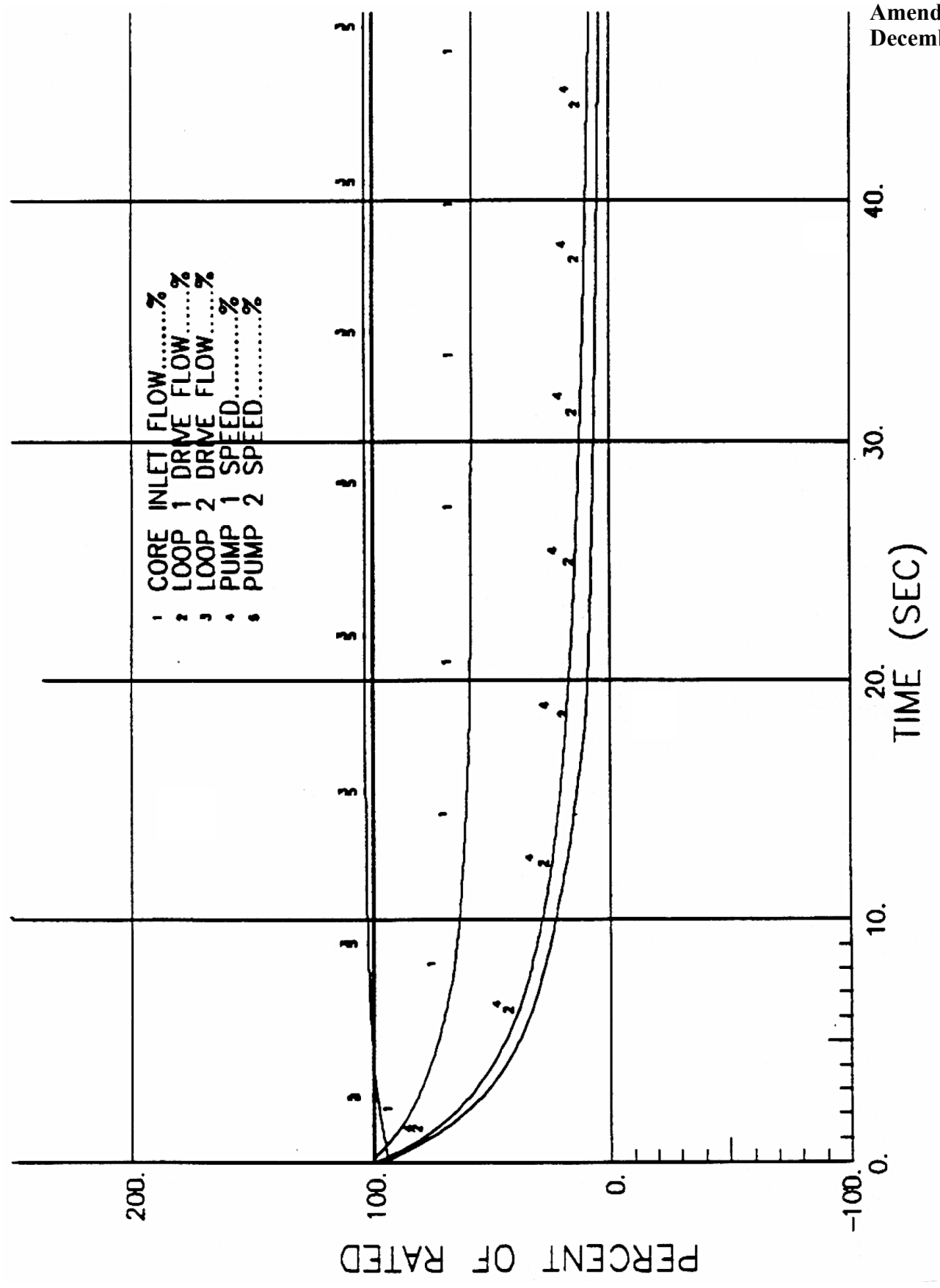

*% Uprated power (RTP) is based on 3544 MWt. Curves as shown are originally based on 3486 MWt.

Columbia Generating Station Final Safety Analysis Report	**One Recirculation Pump Trip at 104.5*% Uprated Power, 100% Flow**		
	Draw. No. 020361.80	Rev.	Figure 15.3-1.4

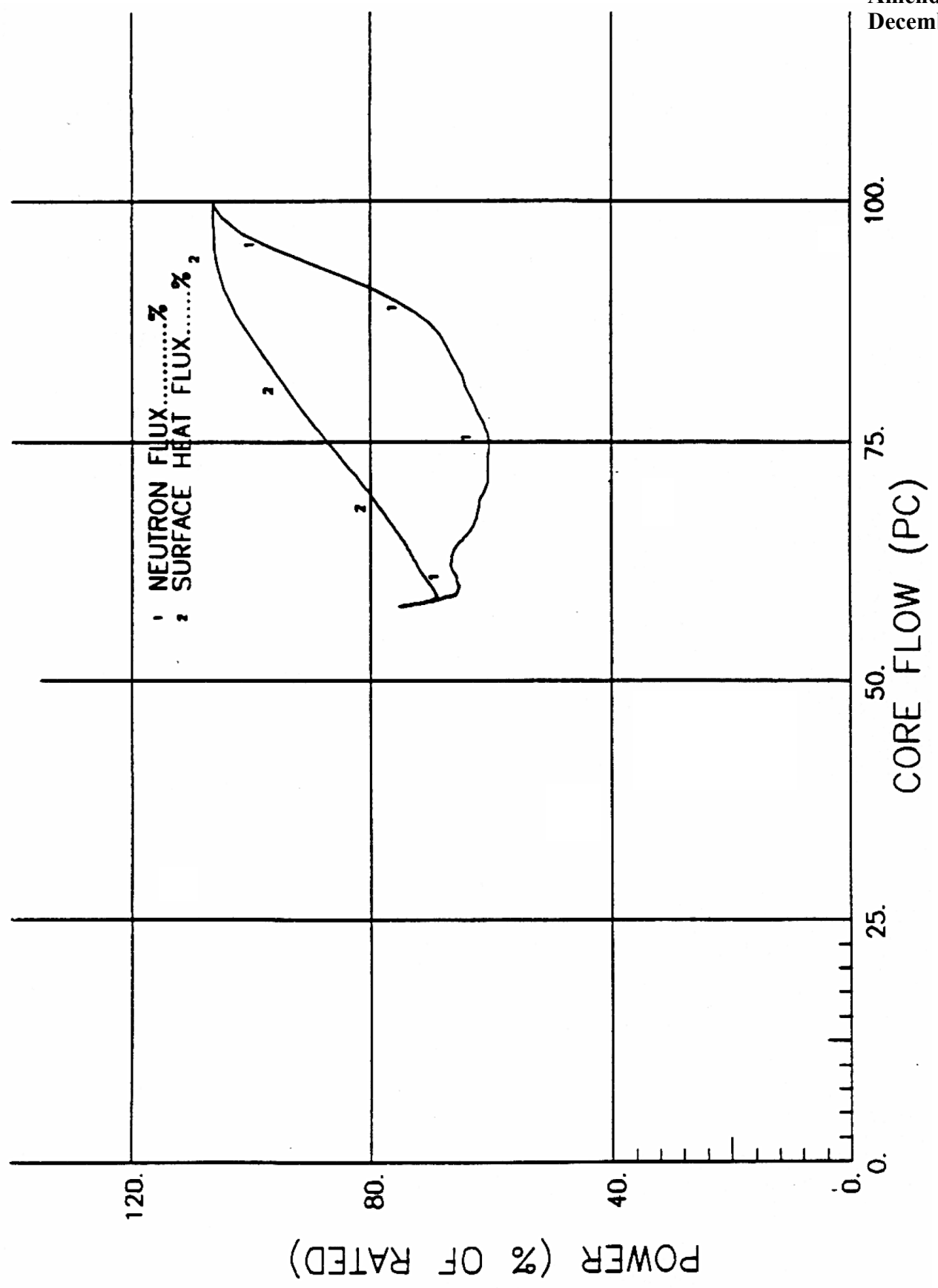

*% Uprated power (RTP) is based on 3544 MWt. Curves as shown are originally based on 3486 MWt.

Columbia Generating Station Final Safety Analysis Report	**One Recirculation Pump Trip at 104.5*% Uprated Power, 100% Flow**		
	Draw. No. 020361.81	Rev.	Figure 15.3-1.5

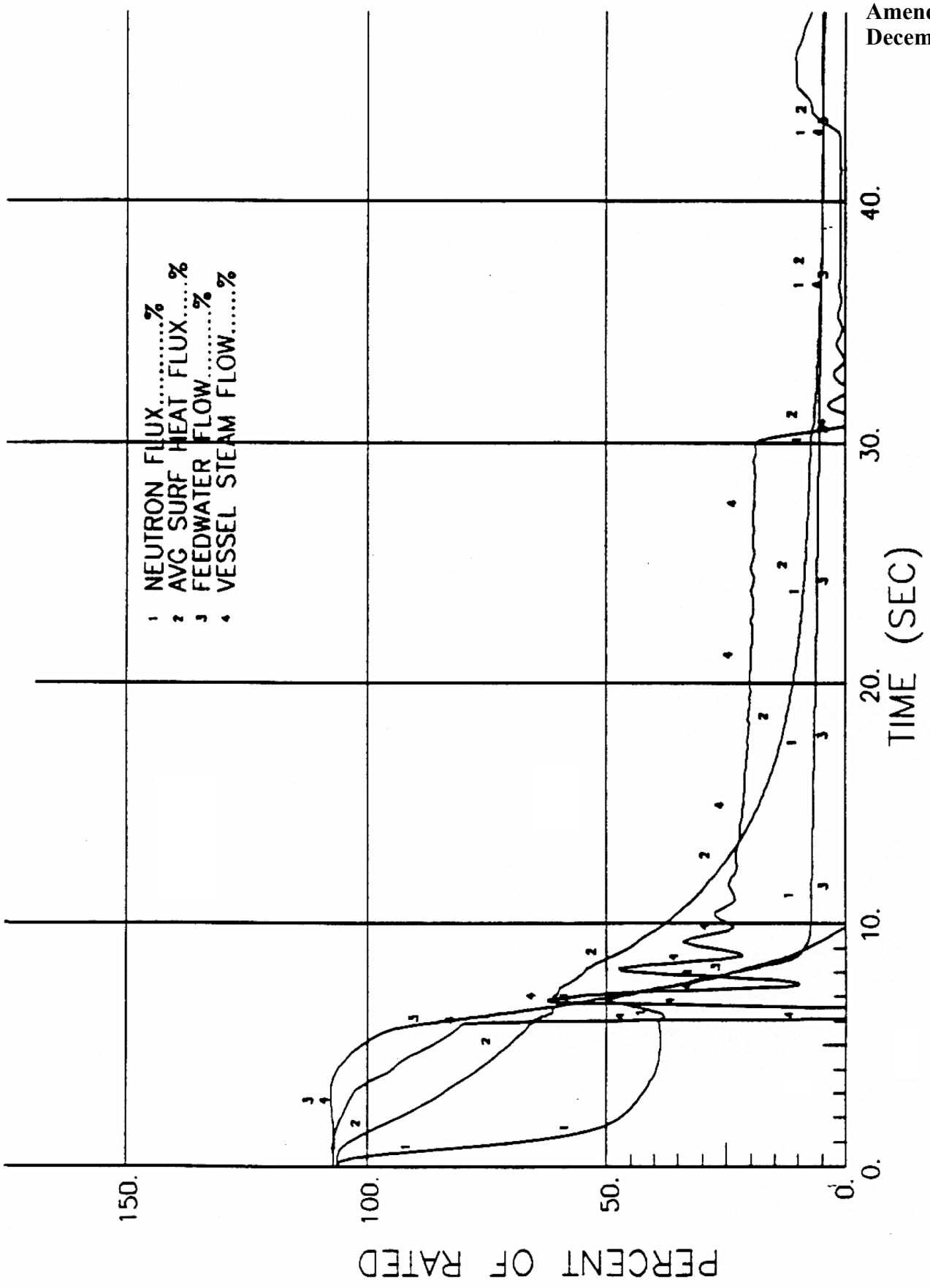

*% Uprated power (RTP) is based on 3544 MWt. Curves as shown are originally based on 3486 MWt.

Columbia Generating Station **Final Safety Analysis Report**	**Two Recirculation Pump Trip at 104.5*% Uprated Power, 100% Flow**

Draw. No. 020361.82	Rev.	Figure 15.3-2.1

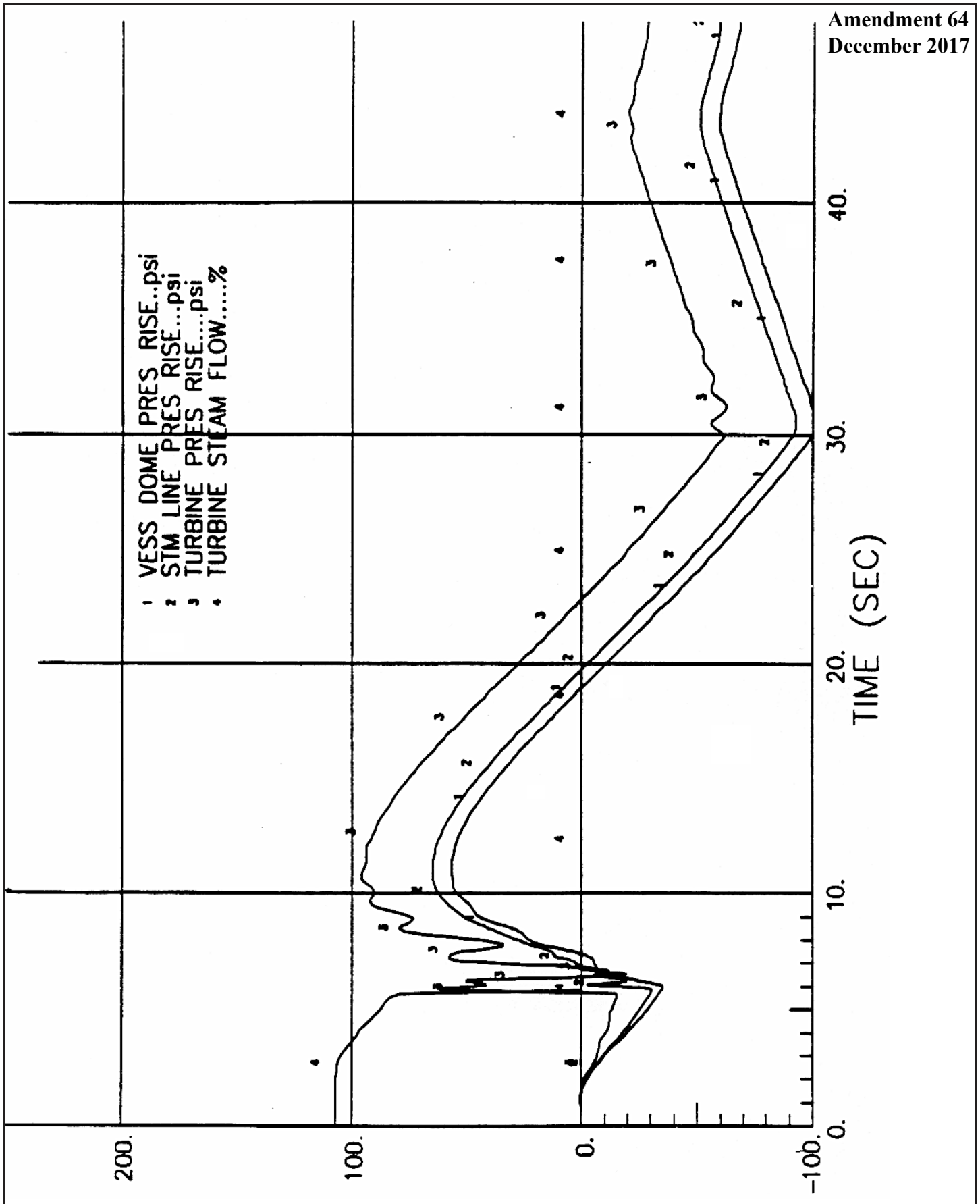

*% Uprated power (RTP) is based on 3544 MWt. Curves as shown are originally based on 3486 MWt.

Columbia Generating Station Final Safety Analysis Report	Two Recirculation Pump Trip at 104.5*% Uprated Power, 100% Flow		
	Draw. No. 020361.83	Rev.	Figure 15.3-2.2

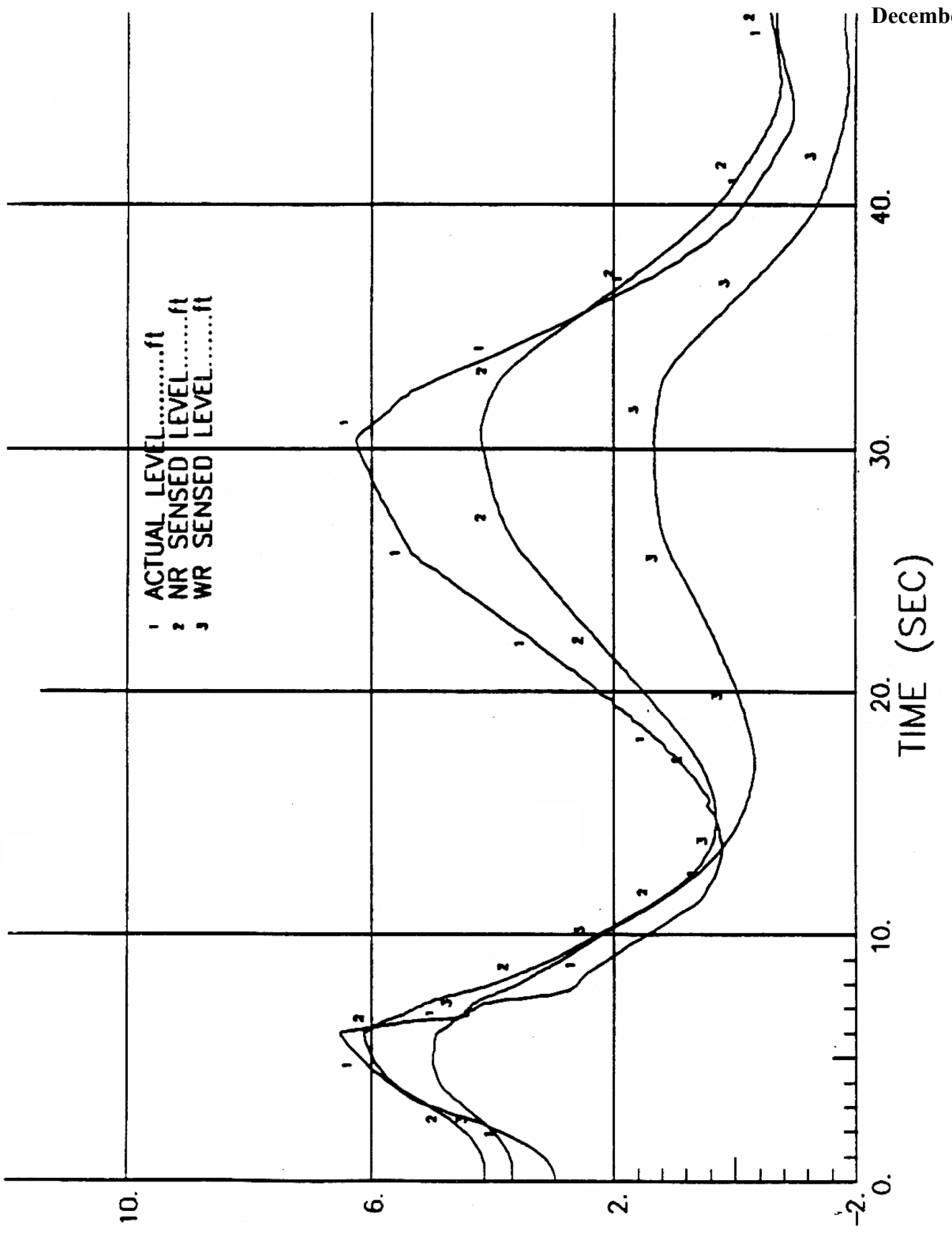

*% Uprated power (RTP) is based on 3544 MWt. Curves as shown are originally based on 3486 MWt.

Columbia Generating Station Final Safety Analysis Report	Two Recirculation Pump Trip at 104.5*% Uprated Power, 100% Flow		
	Draw. No. 020361.84	Rev.	Figure 15.3-2.3

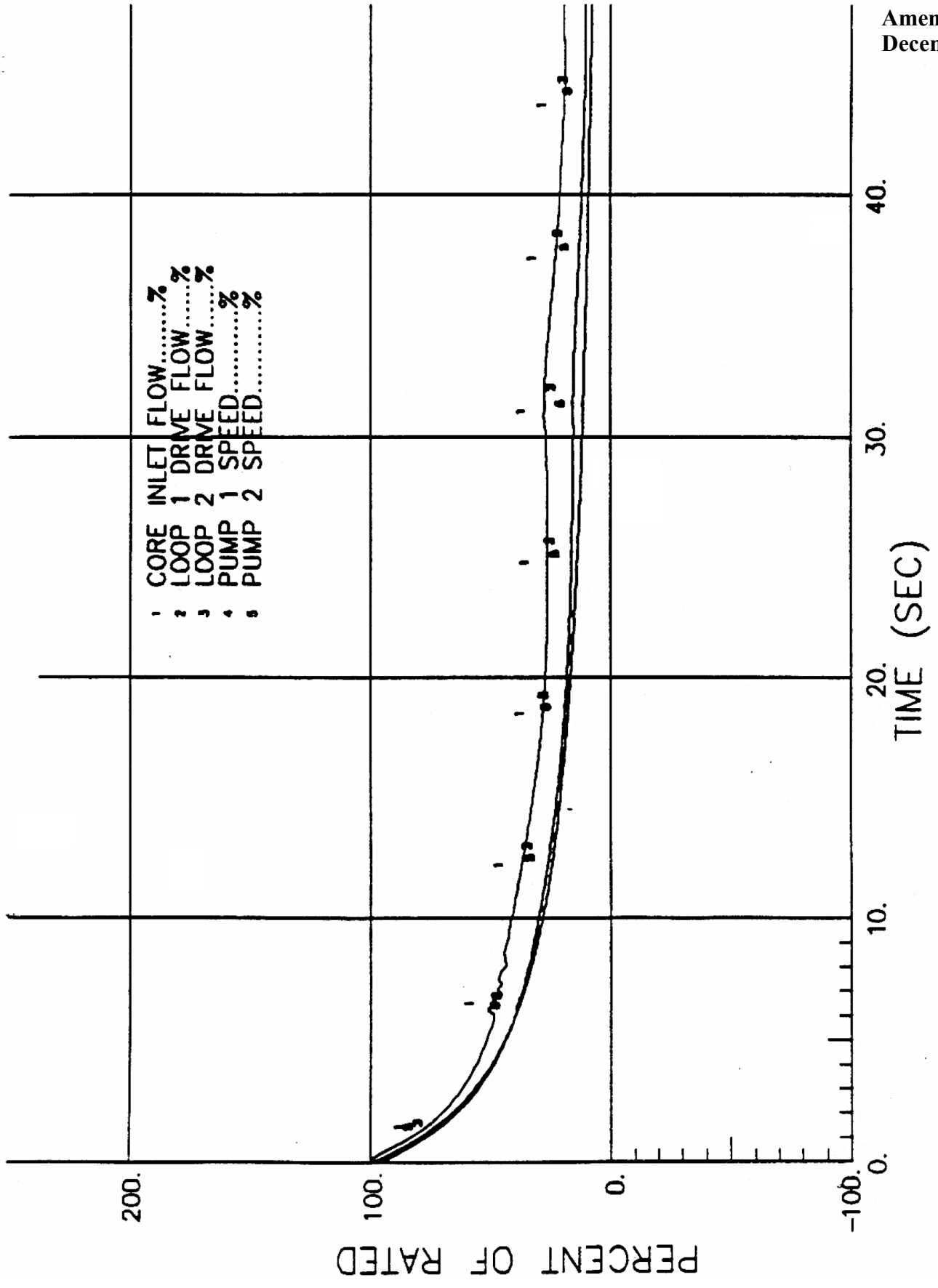

*% Uprated power (RTP) is based on 3544 MWt. Curves as shown are originally based on 3486 MWt.

Columbia Generating Station **Final Safety Analysis Report**	**Two Recirculation Pump Trip at 104.5*% Uprated Power, 100% Flow**		
	Draw. No. 020361.85	Rev.	Figure 15.3-2.4

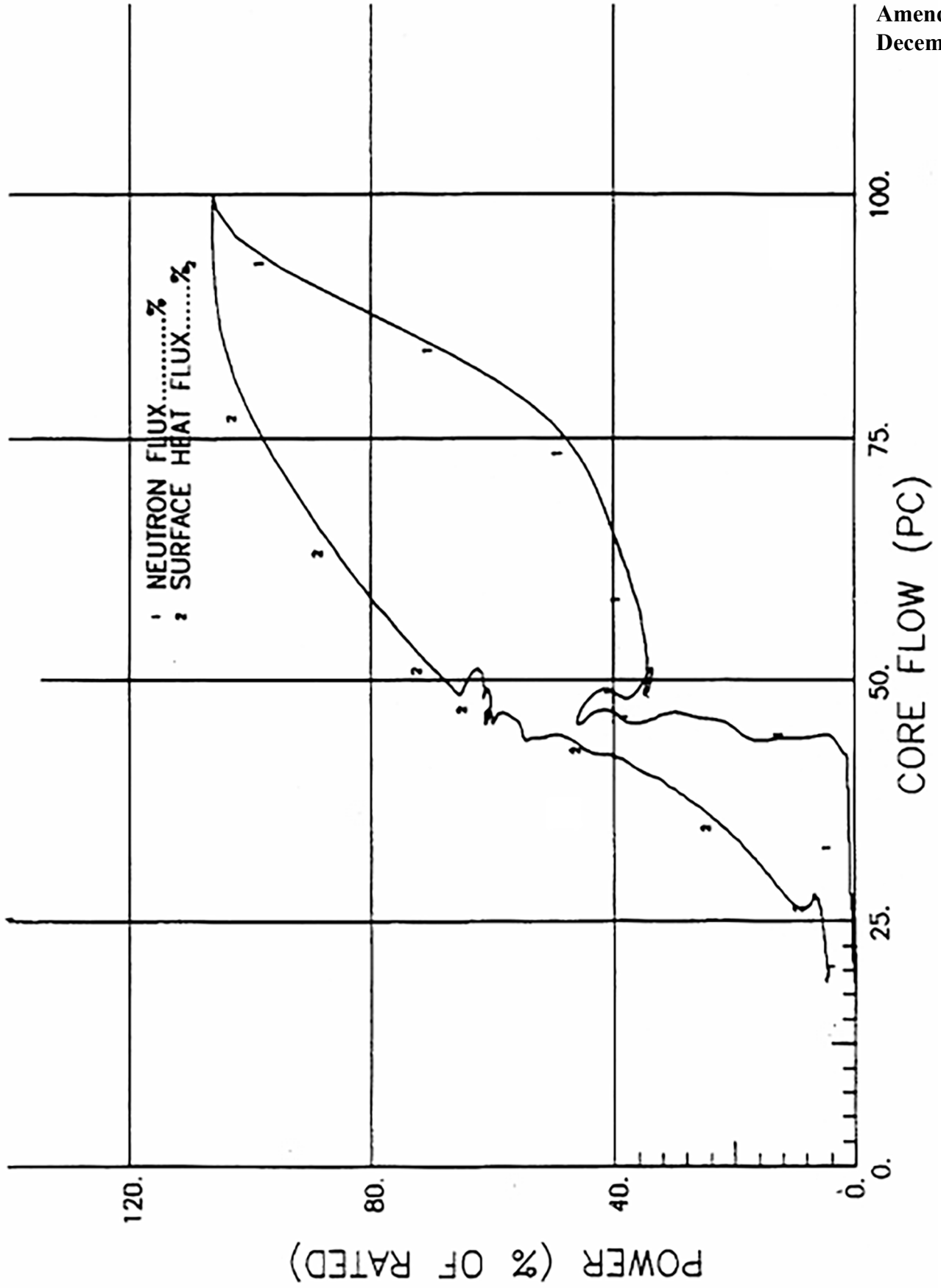

*% Uprated power (RTP) is based on 3544 MWt. Curves as shown are originally based on 3486 MWt.

Columbia Generating Station Final Safety Analysis Report	**Two Recirculation Pump Trip at 104.5*% Uprated Power, 100% Flow**		
	Draw. No. 020361.86	Rev.	Figure 15.3-2.5

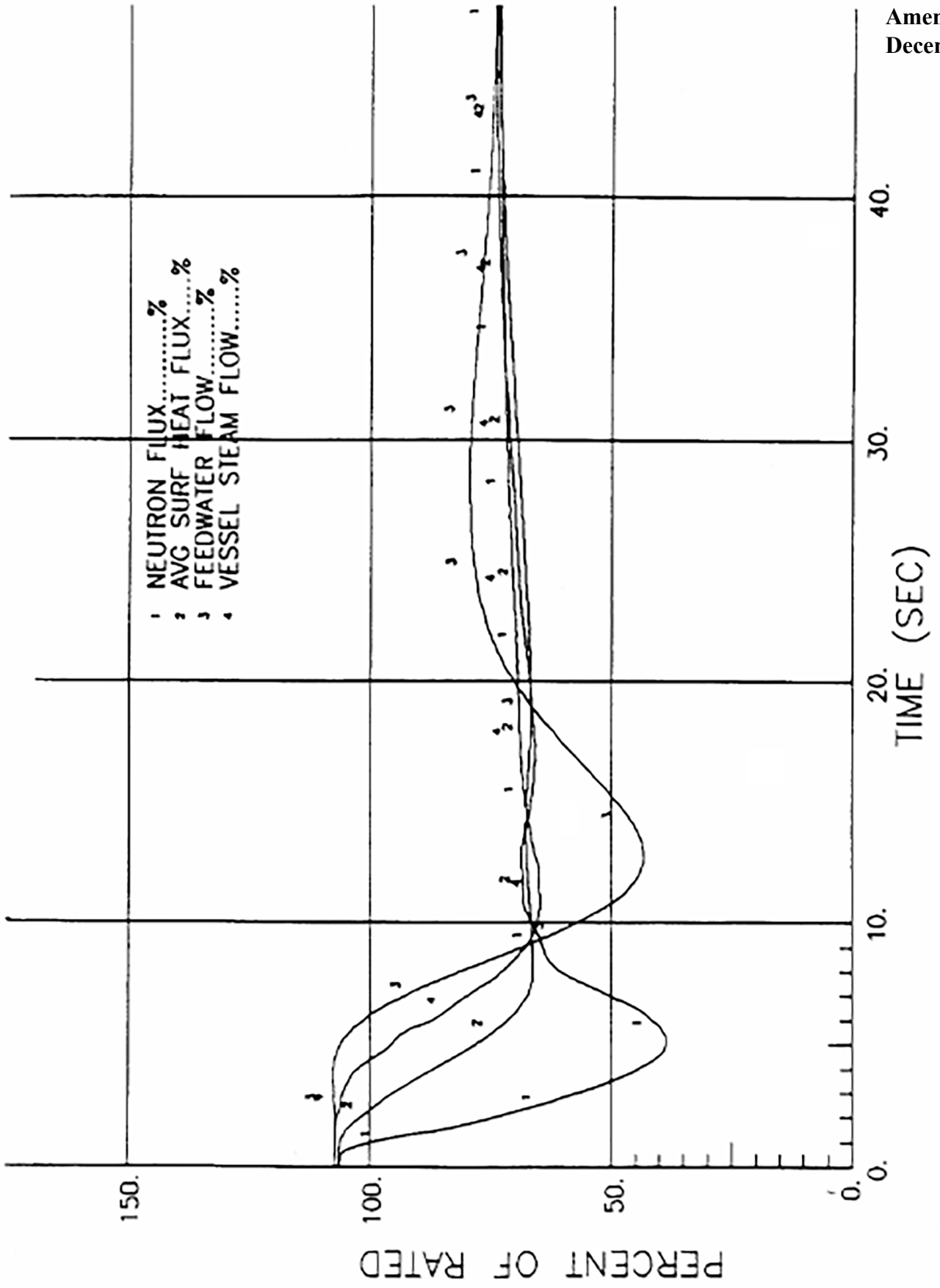

*% Uprated power (RTP) is based on 3544 MWt. Curves as shown are originally based on 3486 MWt.

Columbia Generating Station **Final Safety Analysis Report**	**Recirculation Flow Control Failure - Decreasing Flow in One Loop at 104.5*% Uprated Power, 100% Flow**
	Draw. No. 020361.87 | Rev. | Figure 15.3-3.1

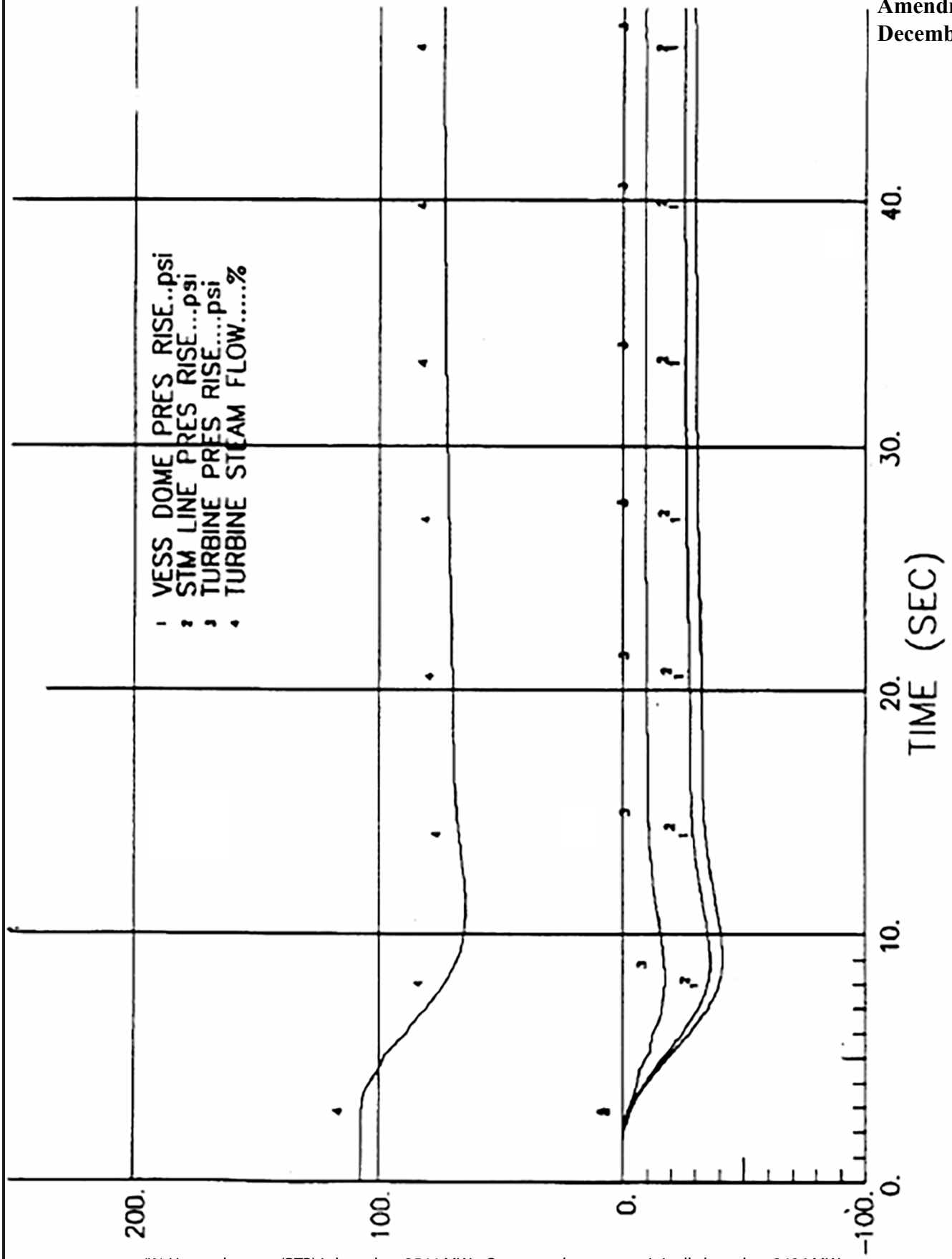

*% Uprated power (RTP) is based on 3544 MWt. Curves as shown are originally based on 3486 MWt.

Columbia Generating Station Final Safety Analysis Report	Recirculation Flow Control Failure - Decreasing Flow in One Loop at 104.5*% Uprated Power, 100% Flow		
	Draw. No. 020361.88	Rev.	Figure 15.3-3.2

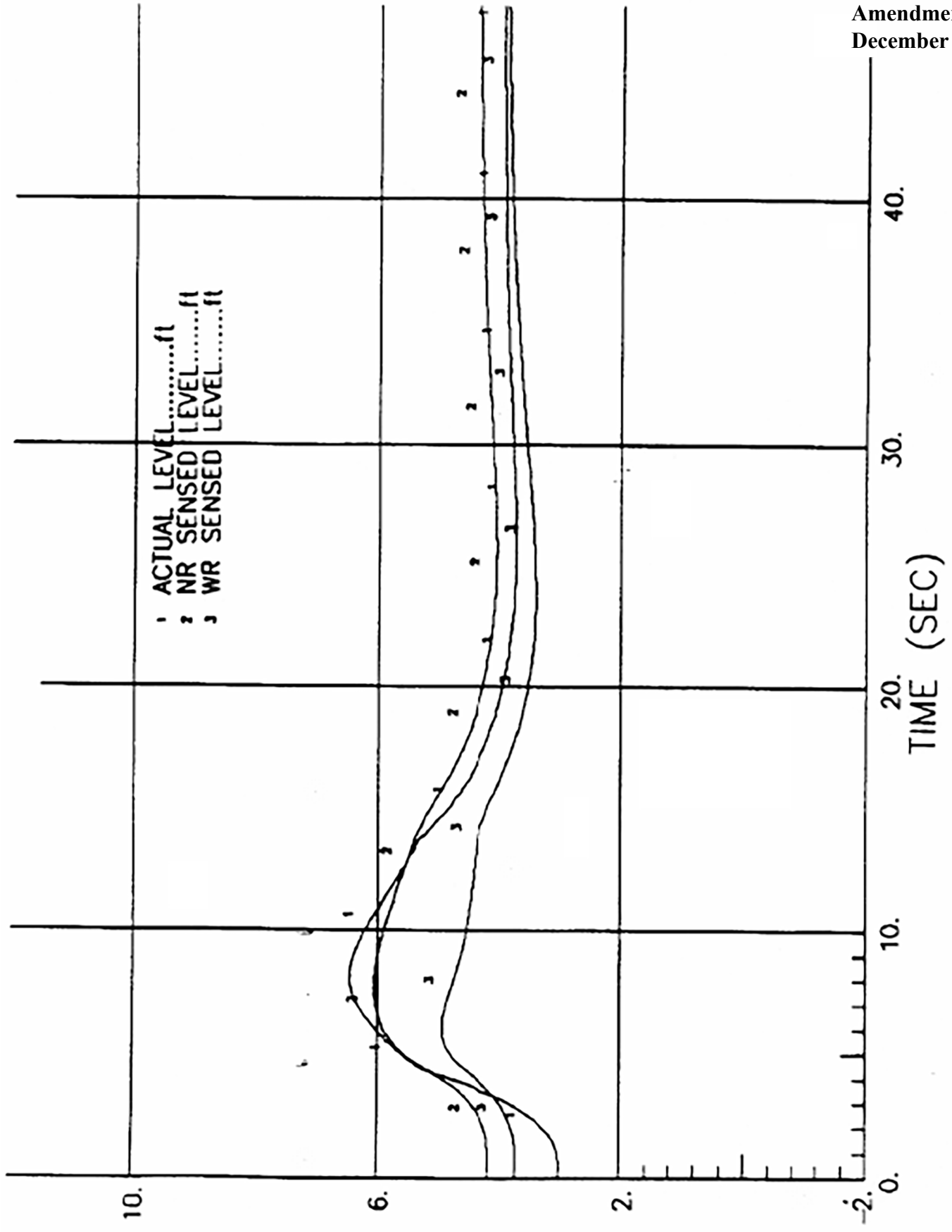

*% Uprated power (RTP) is based on 3544 MWt. Curves as shown are originally based on 3486 MWt.

Columbia Generating Station Final Safety Analysis Report	Recirculation Flow Control Failure - Decreasing Flow in One Loop at 104.5*% Uprated Power, 100% Flow		
	Draw. No. 020361.89	Rev.	Figure 15.3-3.3

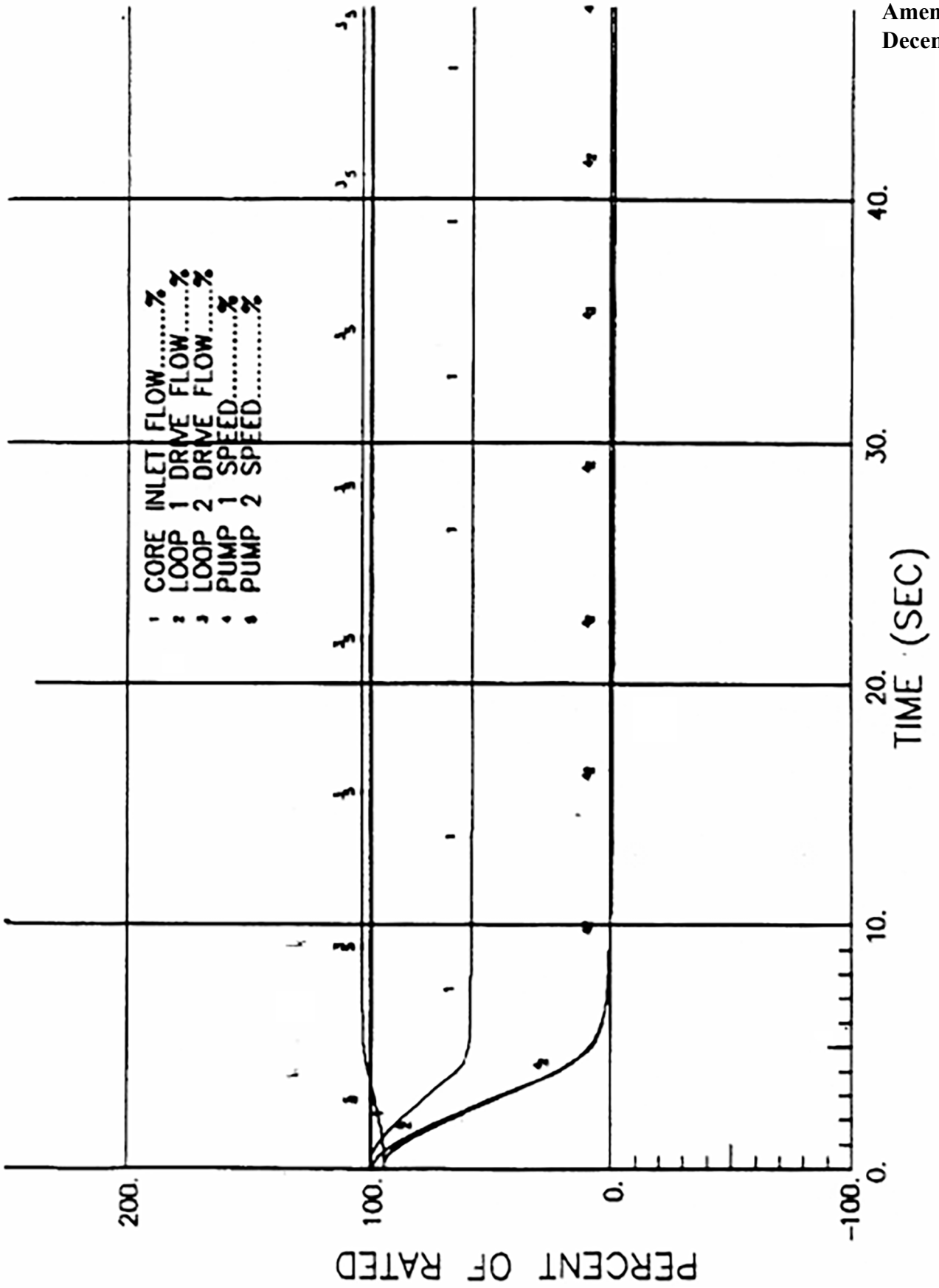

*% Uprated power (RTP) is based on 3544 MWt. Curves as shown are originally based on 3486 MWt.

Columbia Generating Station Final Safety Analysis Report	Recirculation Flow Control Failure - Decreasing Flow in One Loop at 104.5*% Uprated Power, 100% Flow		
	Draw. No. 020361.90	Rev.	Figure 15.3-3.4

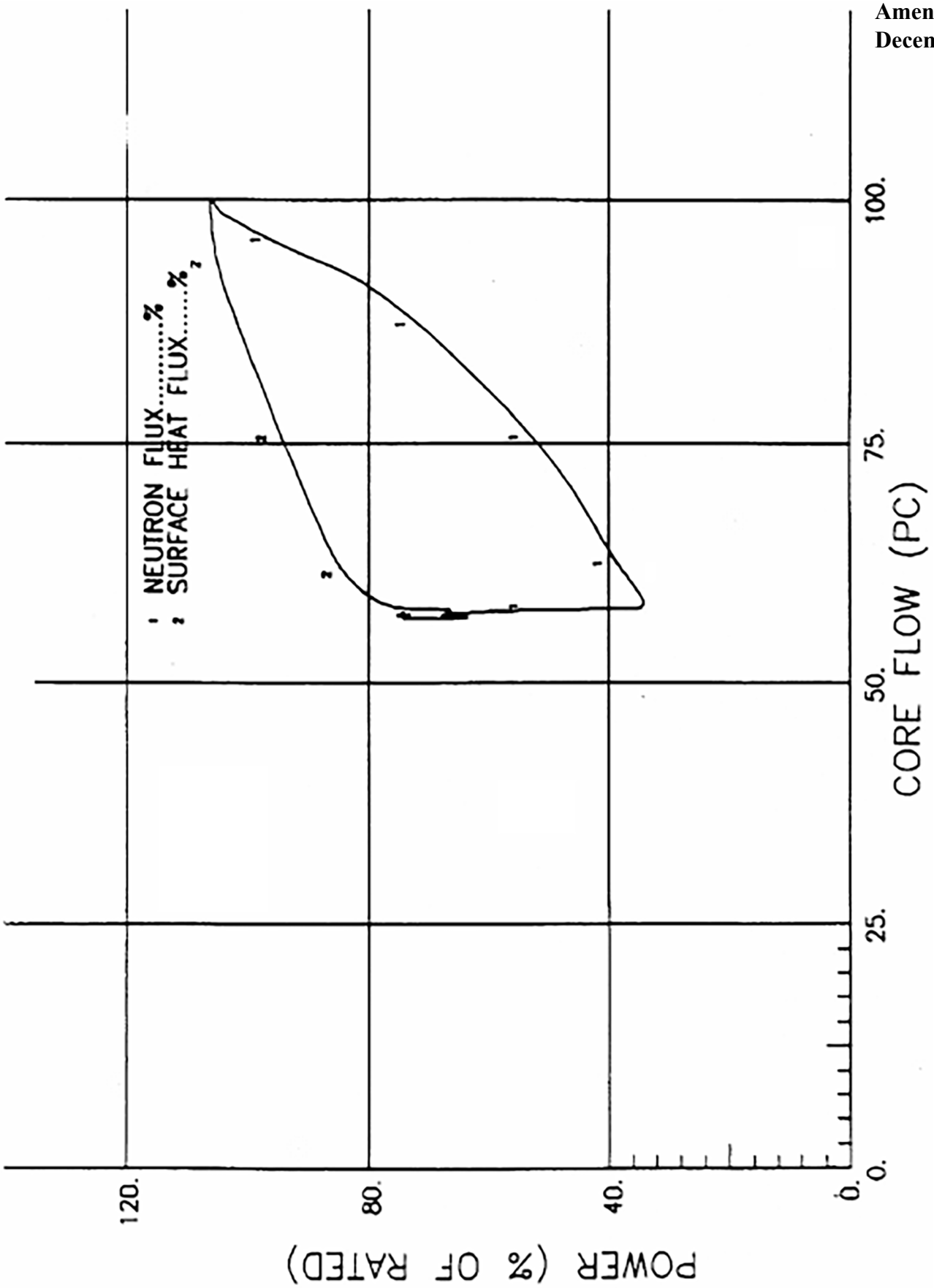

*% Uprated power (RTP) is based on 3544 MWt. Curves as shown are originally based on 3486 MWt.

Columbia Generating Station Final Safety Analysis Report	**Recirculation Flow Control Failure - Decreasing Flow in One Loop at 104.5*% Uprated Power, 100% Flow**		
	Draw. No. 020361.91	Rev.	Figure 15.3-3.5

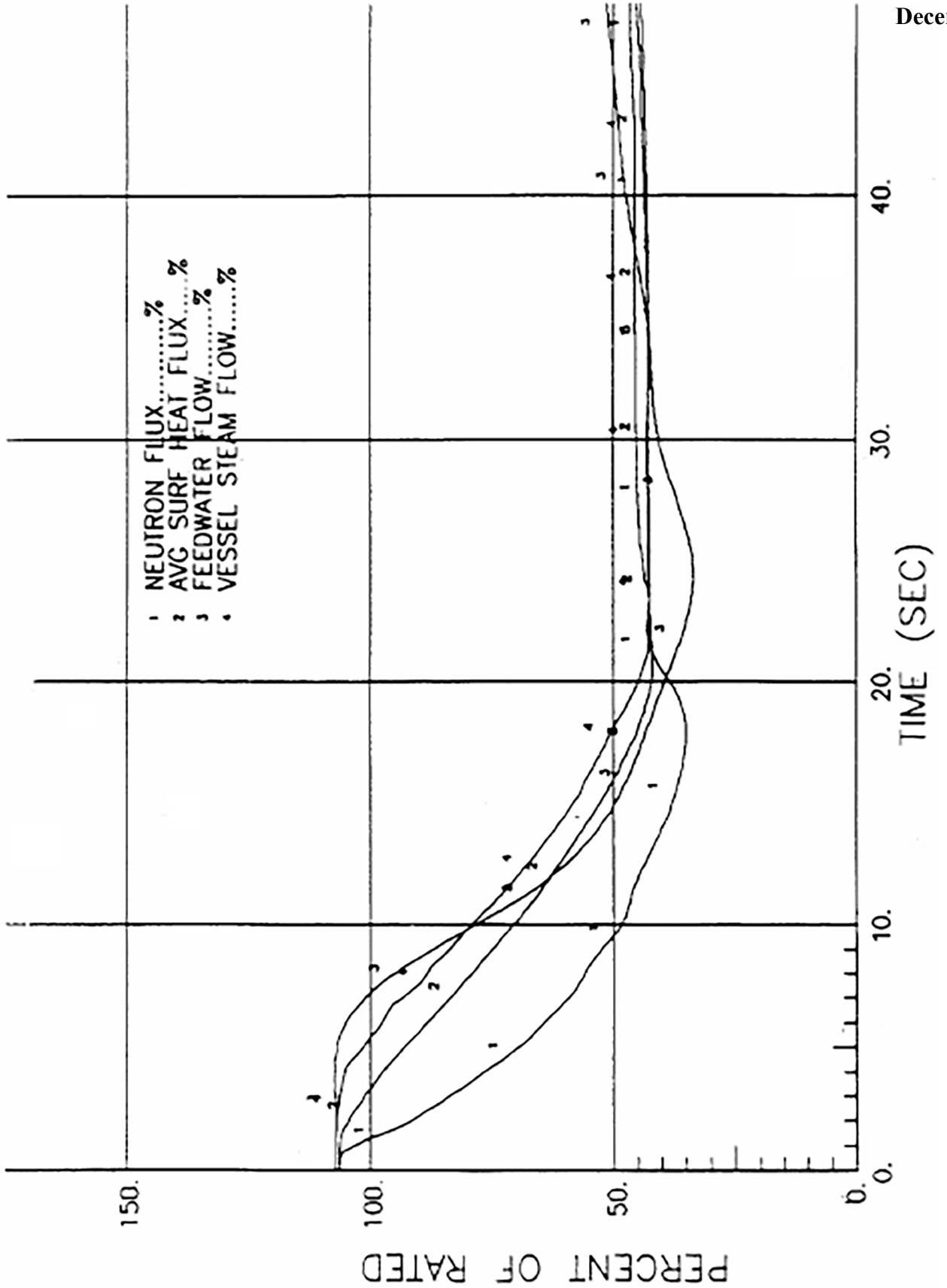

*% Uprated power (RTP) is based on 3544 MWt. Curves as shown are originally based on 3486 MWt.

Columbia Generating Station Final Safety Analysis Report	Recirculation Flow Control Failure - Decreasing Flow in Two Loops, (5%/Sec Ramp) at 104.5*% Uprated Power, 100% Flow		
	Draw. No. 020361.92	Rev.	Figure 15.3-4.1

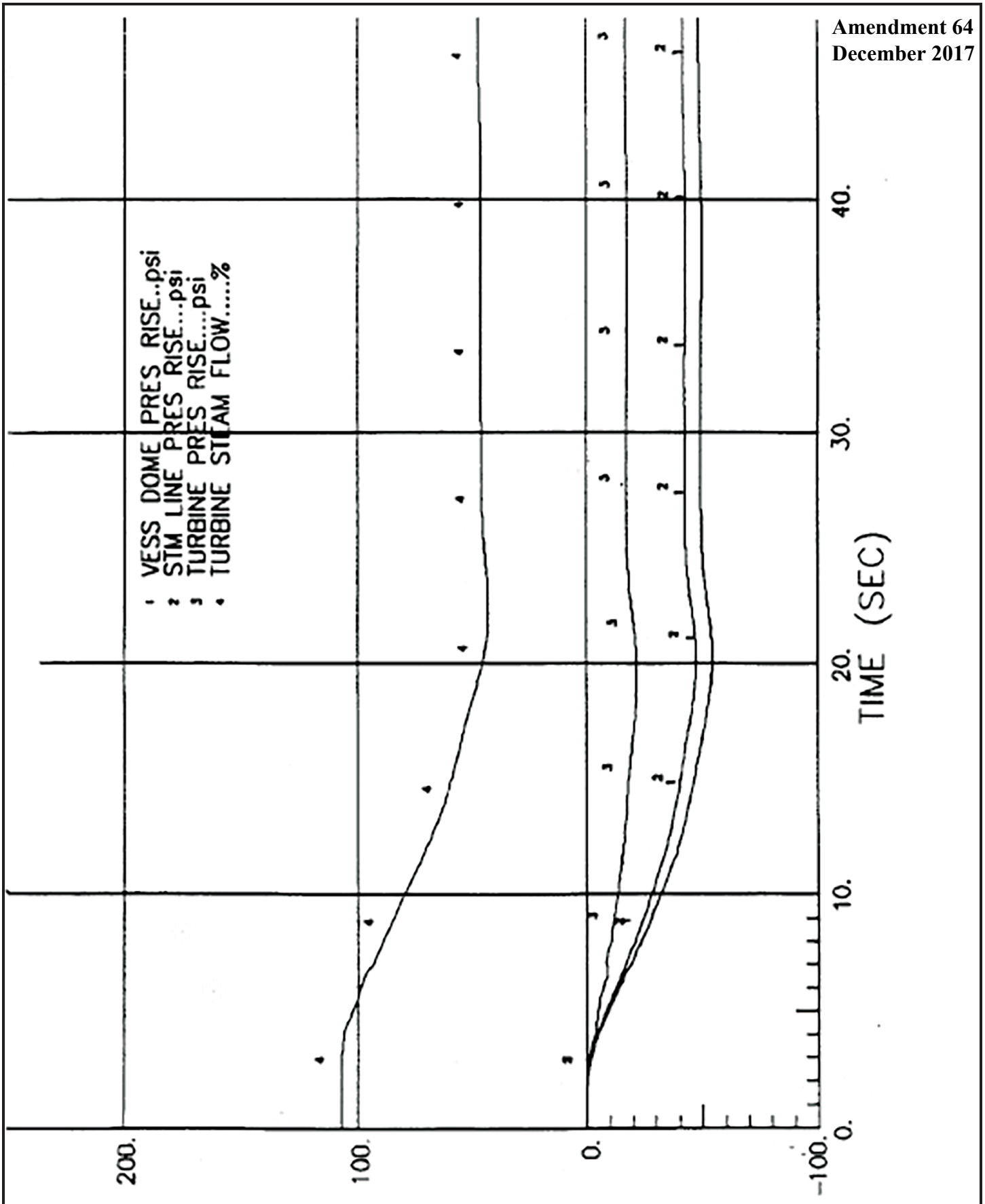

*% Uprated power (RTP) is based on 3544 MWt. Curves as shown are originally based on 3486 MWt.

Columbia Generating Station Final Safety Analysis Report	Recirculation Flow Control Failure - Decreasing Flow in Two Loops, (5%/Sec Ramp) at 104.5*% Uprated Power, 100% Flow		
	Draw. No. 020361.93	Rev.	Figure 15.3-4.2

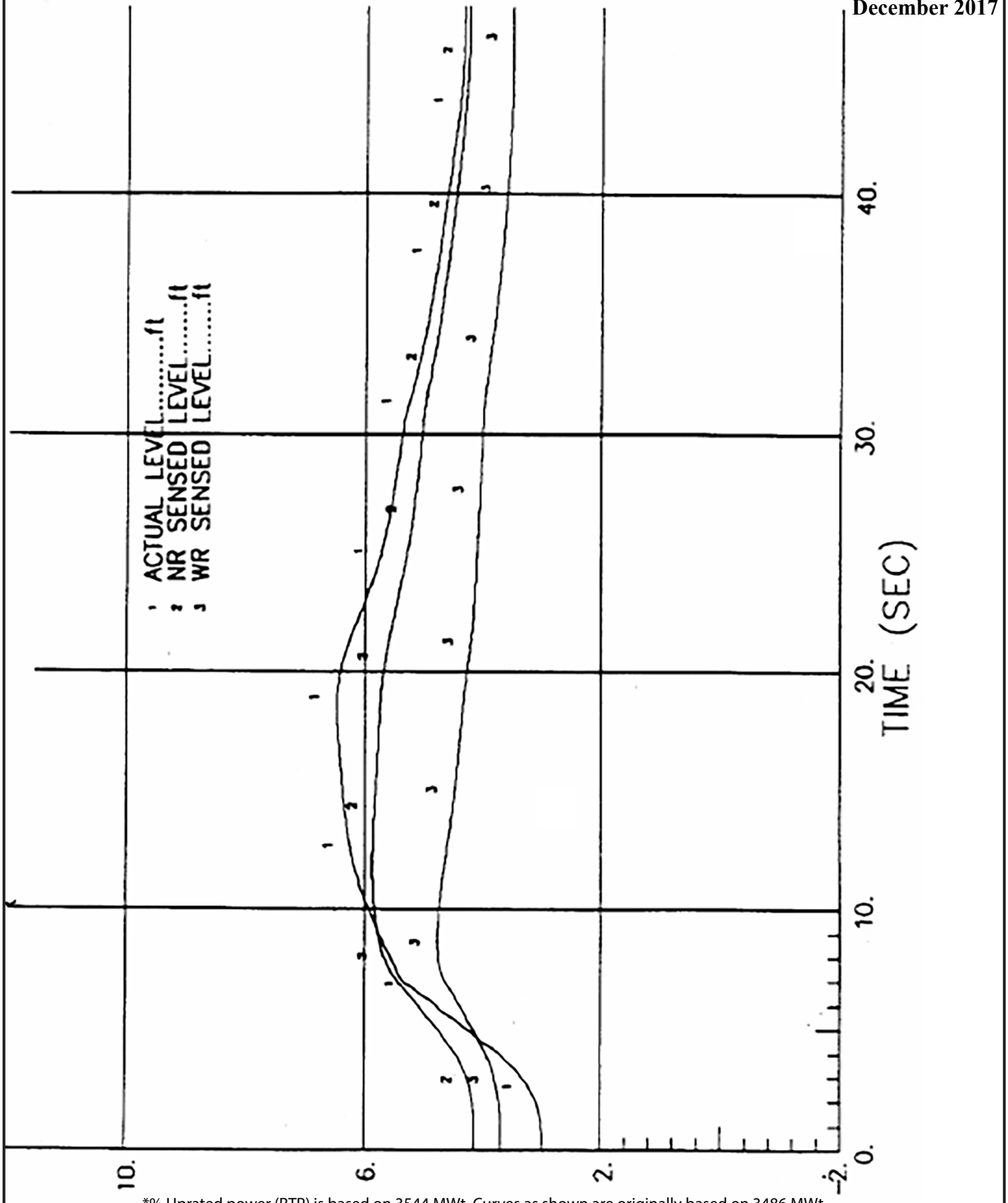

*% Uprated power (RTP) is based on 3544 MWt. Curves as shown are originally based on 3486 MWt.

Columbia Generating Station
Final Safety Analysis Report

Recirculation Flow Control Failure - Decreasing Flow in Two Loops, (5%/Sec Ramp) at 104.5*% Uprated Power, 100% Flow

Draw. No. 020361.94	Rev.	Figure 15.3-4.3

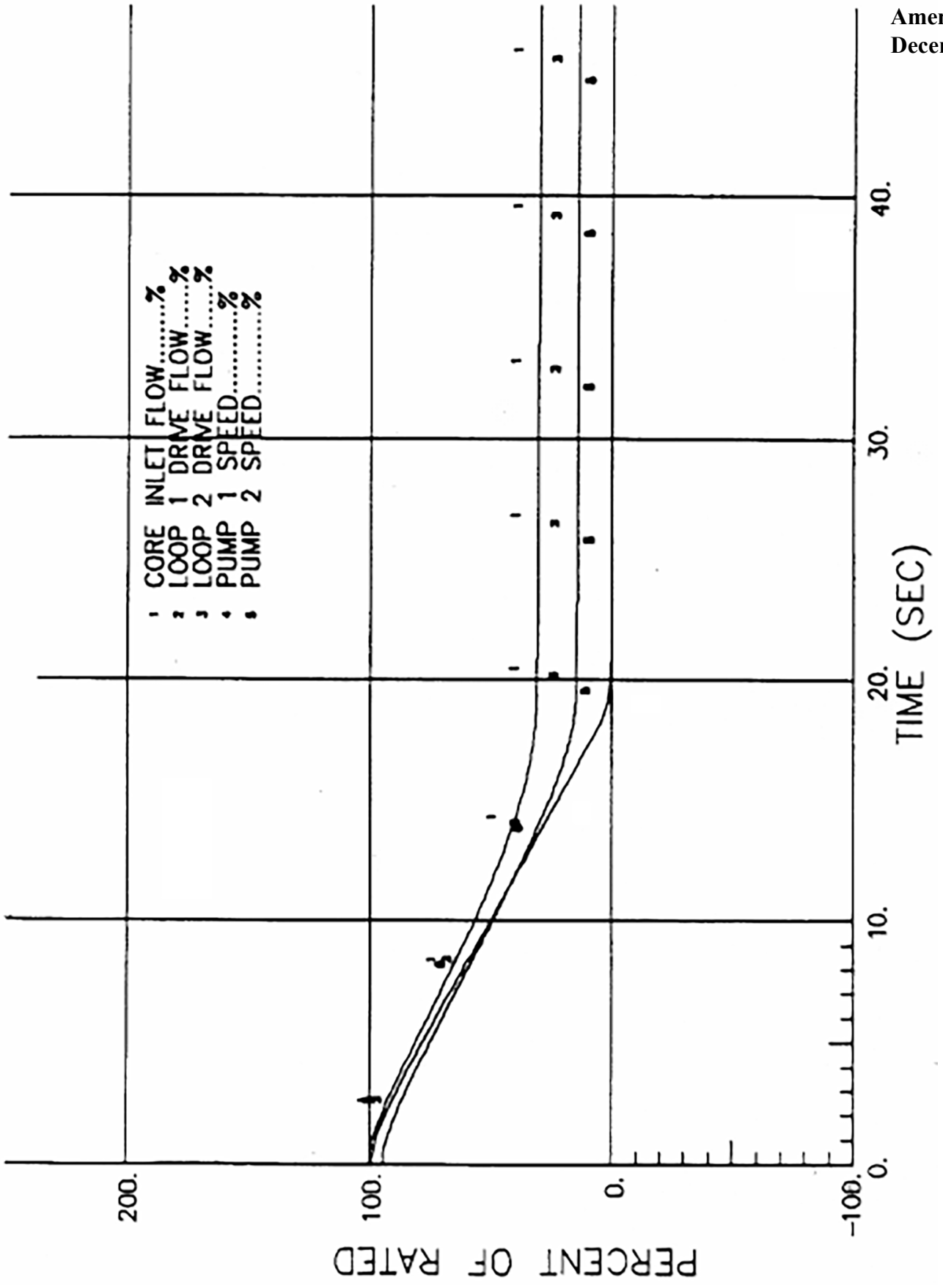

*% Uprated power (RTP) is based on 3544 MWt. Curves as shown are originally based on 3486 MWt.

Columbia Generating Station Final Safety Analysis Report	Recirculation Flow Control Failure - Decreasing Flow in Two Loops, (5%/Sec Ramp) at 104.5*% Uprated Power, 100% Flow		
	Draw. No. 020361.95	Rev.	Figure 15.3-4.4

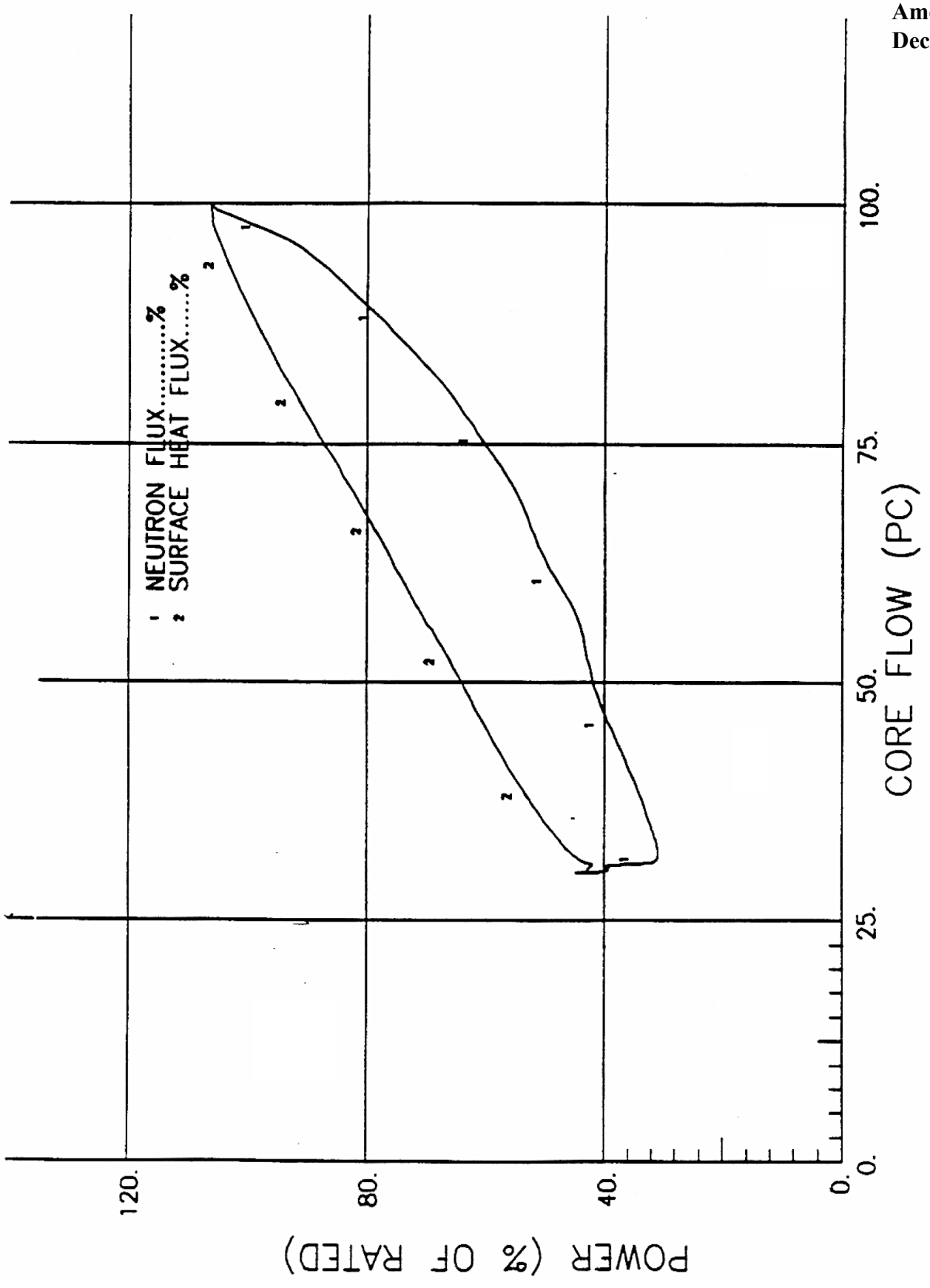

*% Uprated power (RTP) is based on 3544 MWt. Curves as shown are originally based on 3486 MWt.

Columbia Generating Station Final Safety Analysis Report	Recirculation Flow Control Failure - Decreasing Flow in Two Loops, (5%/Sec Ramp) at 104.5*% Uprated Power, 100% Flow		
	Draw. No. 020361.96	Rev.	Figure 15.3-4.5

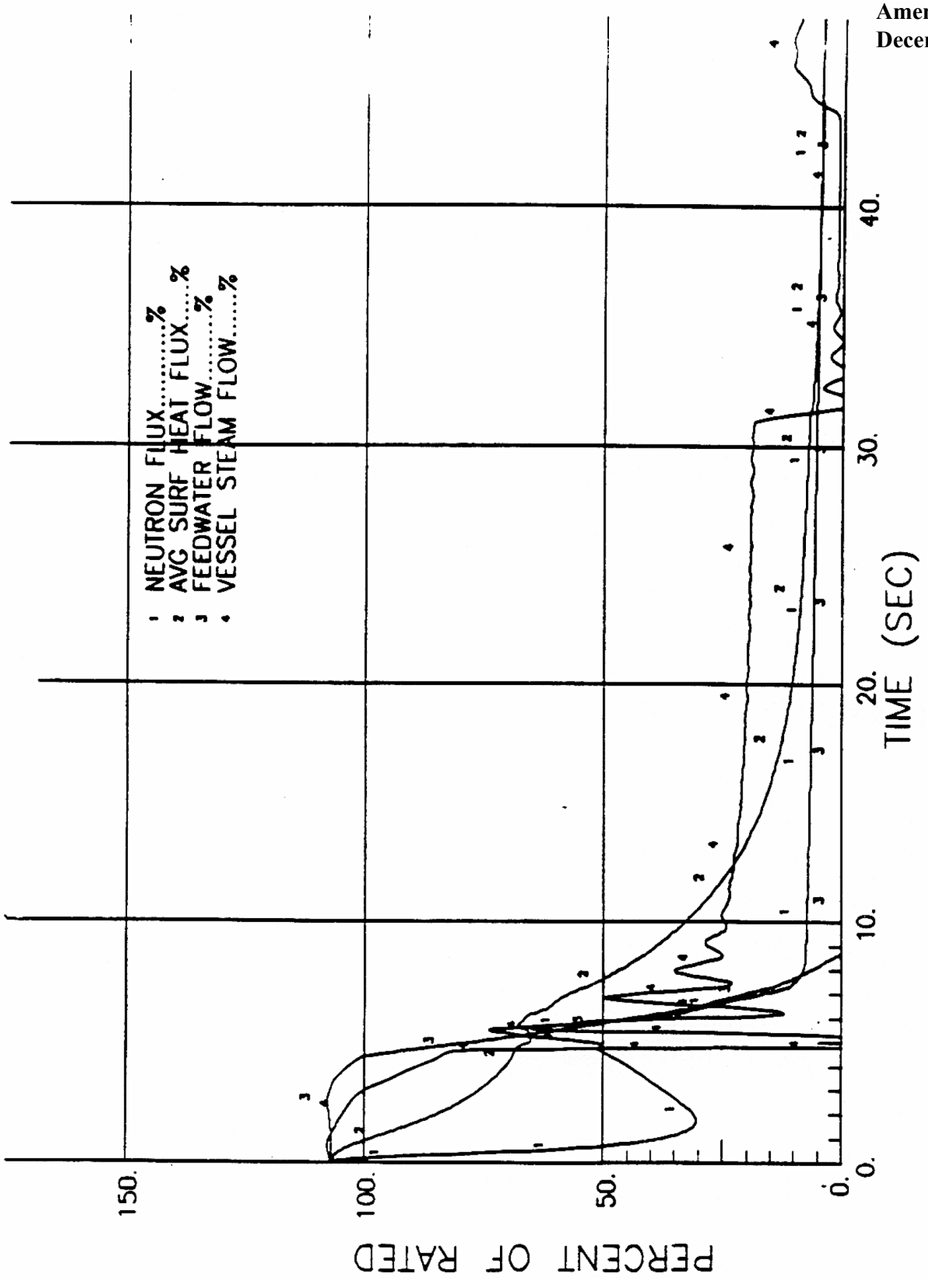

*% Uprated power (RTP) is based on 3544 MWt. Curves as shown are originally based on 3486 MWt.

Columbia Generating Station **Final Safety Analysis Report**	**Recirculation Pump Seizure at 104.5*% Uprated Power, 100% Flow**		
	Draw. No. 020361.97	Rev.	Figure 15.3-5.1

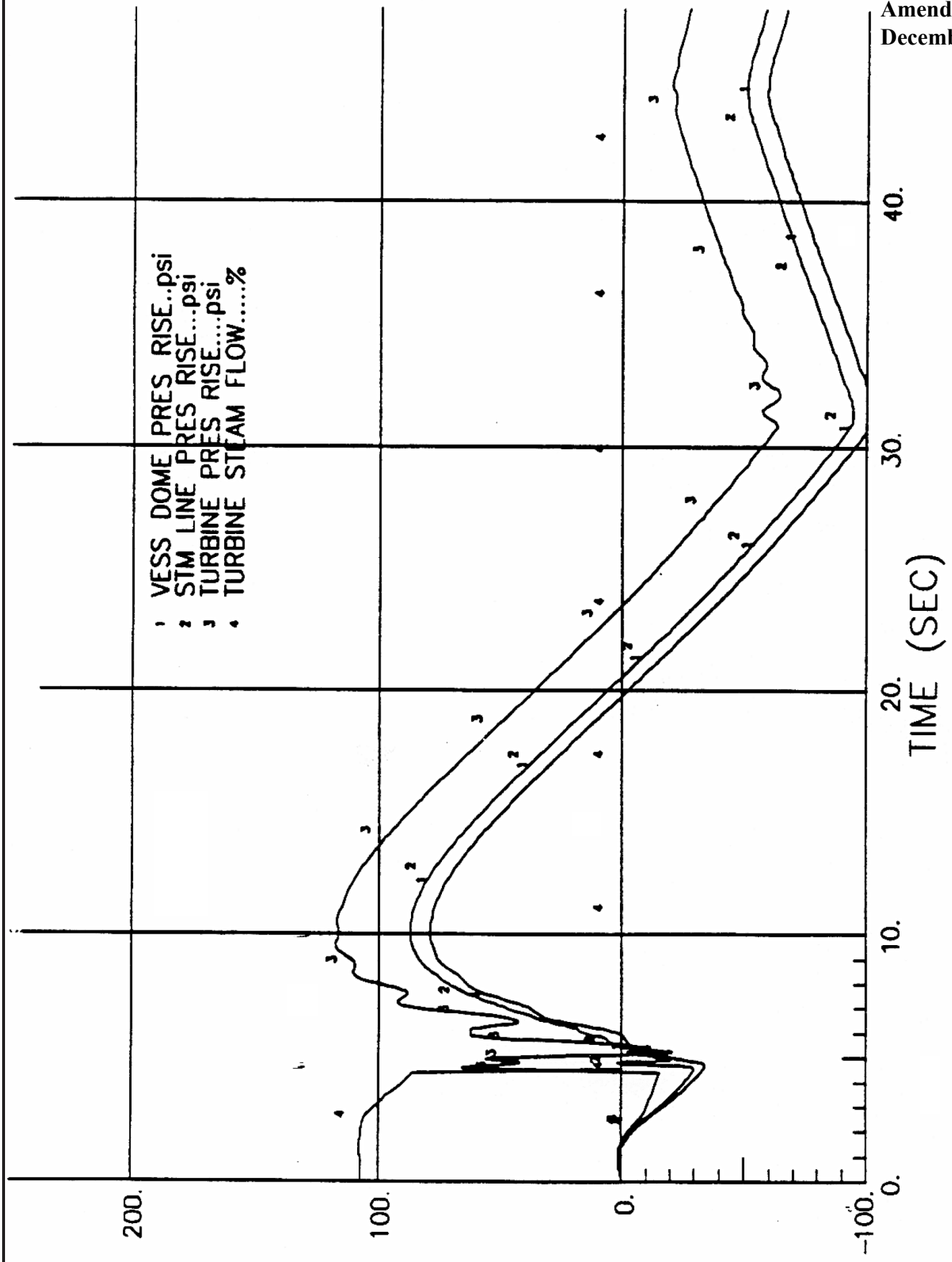

*% Uprated power (RTP) is based on 3544 MWt. Curves as shown are originally based on 3486 MWt.

Columbia Generating Station Final Safety Analysis Report	Recirculation Pump Seizure at 104.5*% Uprated Power, 100% Flow		
	Draw. No. 020361.98	Rev.	Figure 15.3-5.2

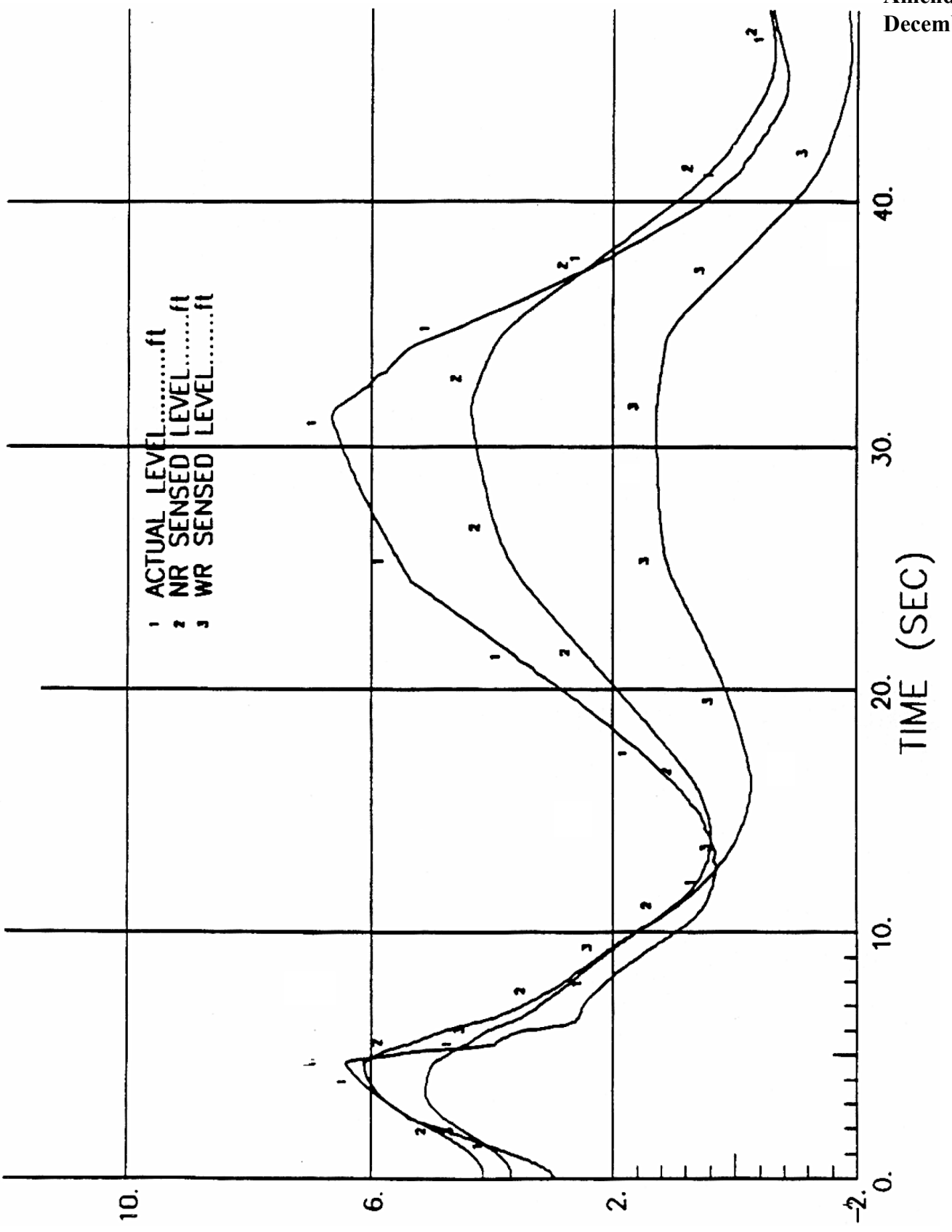

*% Uprated power (RTP) is based on 3544 MWt. Curves as shown are originally based on 3486 MWt.

Columbia Generating Station Final Safety Analysis Report	Recirculation Pump Seizure at 104.5*% Uprated Power, 100% Flow		
	Draw. No. 020361.99	Rev.	Figure 15.3-5.3

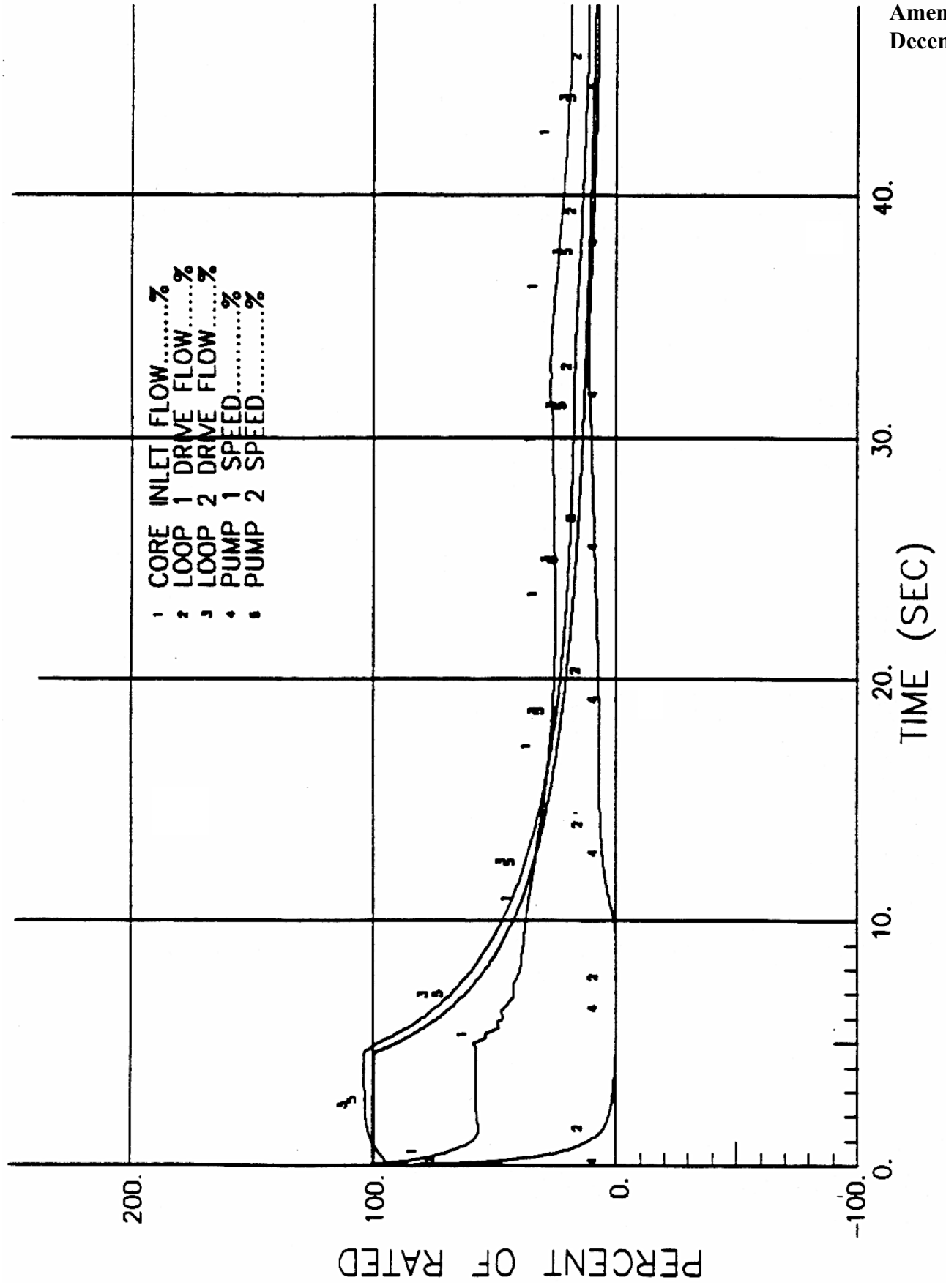

*% Uprated power (RTP) is based on 3544 MWt. Curves as shown are originally based on 3486 MWt.

Columbia Generating Station Final Safety Analysis Report	**Recirculation Pump Seizure at 104.5*% Uprated Power, 100% Flow**		
	Draw. No. 020002.01	Rev.	Figure 15.3-5.4

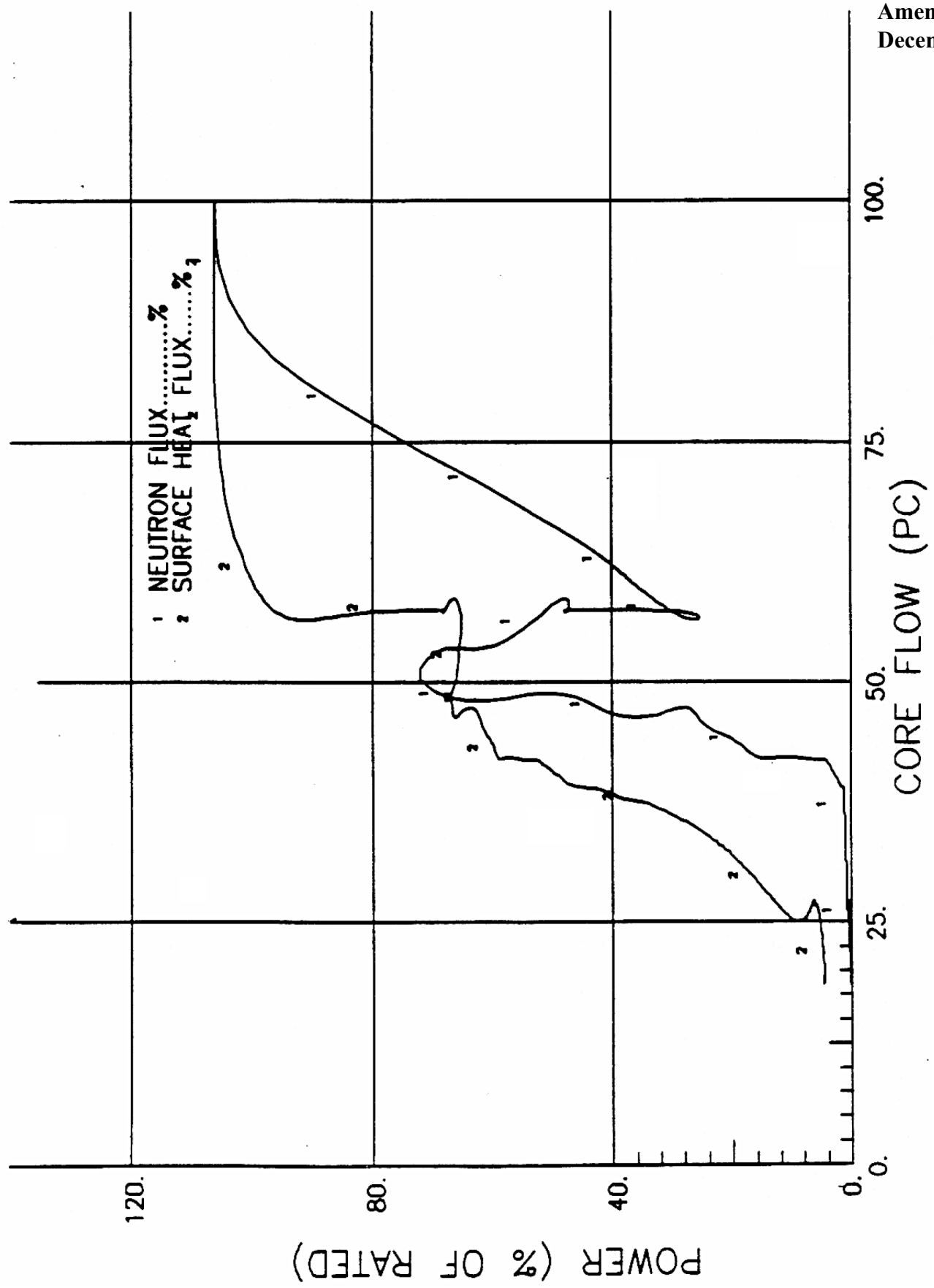

*% Uprated power (RTP) is based on 3544 MWt. Curves as shown are originally based on 3486 MWt.

Columbia Generating Station Final Safety Analysis Report	**Recirculation Pump Seizure at 104.5*% Uprated Power, 100% Flow**		
	Draw. No. 020002.02	Rev.	Figure 15.3-5.5

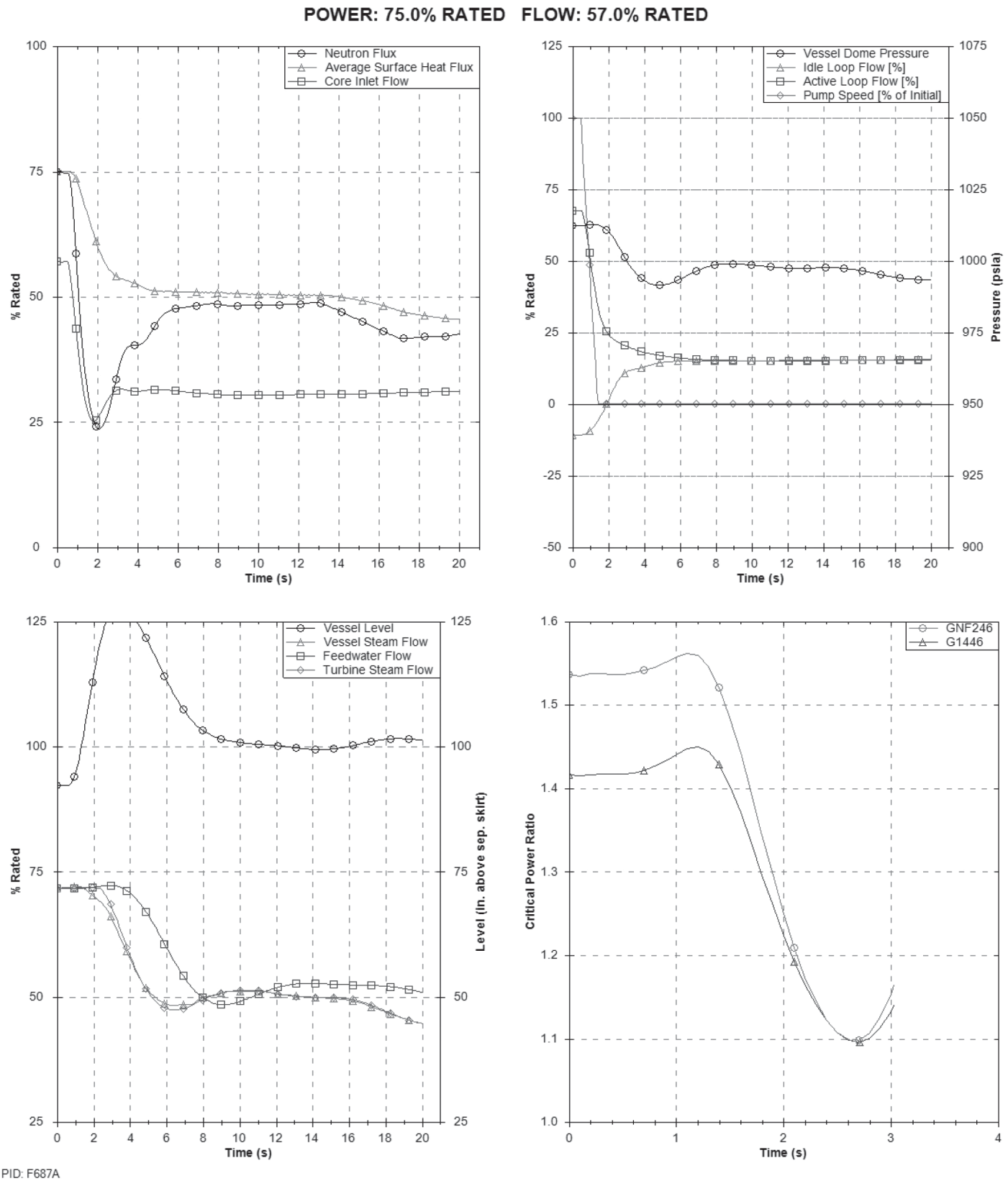

PID: F687A

Columbia Generating Station Final Safety Analysis Report	SLO Recirculation Pump Seizure Results		
	Draw. No. 910402.37	Rev. 1	Figure 15.3-6

15.4 REACTIVITY AND POWER DISTRIBUTION ANOMALIES

15.4.1 ROD WITHDRAWAL ERROR - LOW POWER

This transient is classified as a nonlimiting event for both original and uprated power conditions. Furthermore, the low power Rod Withdrawal Error (RWE) is not affected by power uprate and therefore, the following qualitative analysis is valid for power uprate.

15.4.1.1 Control Rod Removal Error During Refueling

15.4.1.1.1 Identification of Causes and Frequency Classification

The event considered is inadvertent criticality due to the complete withdrawal or removal of the most reactive rod during refueling. The probability of the initial causes alone is considered low enough to warrant its being categorized as an infrequent incident since there is no postulated set of circumstances which results in an inadvertent control rod withdrawal error (RWE) while in the refuel mode.

15.4.1.1.2 Sequence of Events and Systems Operation

15.4.1.1.2.1 Initial Control Rod Removal. During refueling operations, safety system interlocks provide assurance that inadvertent criticality does not occur because a control rod was removed or is withdrawn in coincidence with another control rod.

15.4.1.1.2.2 Fuel Insertion With Control Rod Removed. To minimize the possibility of loading fuel into a cell containing no control rod, it is required that all control rods are fully inserted when fuel is being loaded into the core. This requirement is backed up by refueling interlocks on rod withdrawal and movement of the refueling platform. When the mode switch is in the “REFUEL” position, the interlocks prevent the platform from being moved over the core if a control rod is withdrawn and fuel is on the hoist. Likewise, if the refueling platform is over the core and fuel is on the hoist, control rod motion is blocked by the interlocks.

15.4.1.1.2.3 Second Control Rod Removal. When the platform is not over the core (or fuel is not on the hoist) and the mode switch is in the “REFUEL” position, only one control rod can be withdrawn. Any attempt to withdraw a second rod results in a rod block by the refueling interlocks.

Since the core is designed to meet shutdown requirements with the highest worth rod withdrawn, the core remains subcritical even with one rod withdrawn.

15.4.1.1.2.4 Control Rod Removal Without Fuel Removal. The design of the control rod, incorporating the velocity limiter, does not physically permit the upward removal of the control

rod without the simultaneous or prior removal of the four adjacent fuel bundles. This precludes any hazardous condition.

15.4.1.1.2.5 Effect of Single Failure and Operator Errors. If any one of the operations involved in initial failure or error is followed by any other single equipment failure or single operator error, the necessary safety actions are taken (e.g., rod block or scram) automatically prior to violation of any limits.

15.4.1.1.3 Core and System Performances

Since the probability of inadvertent criticality during refueling is precluded, the core and system performances were not analyzed. The withdrawal of the highest worth control rod during refueling will not result in criticality. This is verified experimentally by performing shutdown margin checks. Additional reactivity insertion is precluded by interlocks. As a result, no radioactive material is released from the fuel, making it unnecessary to assess any radiological consequences.

No mathematic models are involved in this event. The need for input parameters or initial conditions is not required as there are no results to report. Consideration of uncertainties is not appropriate.

15.4.1.1.4 Barrier Performance

An evaluation of the barrier performance was not made for this event since it is a highly localized event and does not result in any change in the core pressure or temperature.

15.4.1.1.5 Radiological Consequences

An evaluation of the radiological consequences was not made for this event since no radioactive material is released from the fuel.

15.4.1.2 Continuous Rod Withdrawal During Reactor Startup

15.4.1.2.1 Identification of Causes and Frequency Classification

This event is categorized as an infrequent incident. The probability of further development of this event is low because it is contingent upon the failure of the rod worth minimizer (RWM) system or failure of a second licensed operator (or technically qualified member of the technical staff) observing the out-of-sequence rod selection concurrent with a high worth rod, out-of-sequence rod selection contrary to procedures, and operator disregard of continuous alarm annunciations prior to safety system actuation.

15.4.1.2.2 Sequence of Events and Systems Operation

15.4.1.2.2.1 Sequence of Events. Control RWEs are not considered credible in the startup and low power ranges. The RWM or second licensed operator (or other technically qualified member of the technical staff) prevents the operator from selecting and withdrawing an out-of-sequence control rod.

Continuous control RWEs during reactor startup are precluded by the RWM or second qualified person. The RWM or second qualified person prevents the withdrawal of an out-of-sequence control rod from 100% control rod density to 10% of rated thermal power.

15.4.1.2.2.2 Effects of Single Failure and Operator Errors. If any one of the operations involved in the initial failure or error is followed by another single component failure or single operator error, the necessary safety actions are automatically taken to preclude violation of any limits.

15.4.1.2.3 Core and System Performance

The performance of the RWM or second licensed operator (or technically qualified member of the technical staff) prevents erroneous selection and withdrawal of an out-of-sequence control rod. Thus, core and system performance is not affected by such a single operator error.

No mathematical models are involved in this event. The need for input parameters or initial conditions is not required as there are no results to report. Consideration of uncertainties is not applicable.

15.4.1.2.4 Barrier Performance

An evaluation of the barrier performance was not performed for this event since there is no postulated set of circumstances for which this error could occur.

15.4.1.2.5 Radiological Consequences

An evaluation of the radiological consequences is not required for this event since no radioactive material is released.

15.4.2 ROD WITHDRAWAL ERROR - AT POWER

15.4.2.1 Identification of Causes and Frequency Classifications

15.4.2.1.1 Identification of Causes

While operating in the power range in a normal mode of operation, the reactor operator makes a procedural error and withdraws the maximum worth control rod until the rod block monitor (RBM) system inhibits further withdrawal.

15.4.2.1.2 Frequency Classification

The probability of this event is considered low enough to warrant its being categorized as an infrequent incident. However, because of the lack of sufficient frequency database, this event is considered an incident of moderate frequency.

15.4.2.2 Sequence of Events and Systems Operation

15.4.2.2.1 Sequence of Events

The sequence of events for this transient is presented in Table 15.4-1.

15.4.2.2.2 Systems Operation

The focal point of this event is localized to a small portion of the core; therefore, although reactor control and instrumentation is assumed to function normally, credit is taken only for the RBM system.

While operating in the power range in a normal operational mode, the reactor operator makes a procedural error and withdraws the maximum worth control rod until the RBM system inhibits further withdrawal.

Under normal operating conditions the nearest local power range monitor (LPRM) would detect the peak linear power exceeding design limits and alarm. The operator would acknowledge the alarm and take appropriate action.

If the RWE is severe, the RBM system would alarm, at which time the operator would acknowledge the alarm and take corrective action. Even for conditions such as highly abnormal control rod patterns, operator disregard of all alarms and warnings, and continuous control rod withdrawal, the RBM system will block further withdrawal of the control rod before the fuel reaches the point of boiling transition or the 1% cladding strain limit imposed on the clad.

15.4.2.2.3 Effect of Single Failure and Operator Errors

Operator errors do not impact the consequences of this event due to the single failure proof design of the RBM system.

15.4.2.3 Core and System Performance

15.4.2.3.1 Mathematical Model

The control RWE transient is classified as a "slow transient." A slow transient is a power increase transient that is sufficiently slow so that the assumption that steady-state conditions are achieved at each time step is either realistic or conservative. Using this assumption, this transient is calculated using a steady state, three dimensional, coupled nuclear thermal hydraulics computer program PANACEA. All spatial effects are included in the calculation. A detailed discussion of the code is presented in Reference 15.4-4.

The control RWE analysis has been performed to estimate the minimum critical power ratio (MCPR) and maximum linear heat generation rate (LHGR) in such a transient. A starting control rod pattern is established for the typical BWR reactor and a central control rod is withdrawn from the fully inserted position. Rod withdrawal results in an increase of the LHGR and decrease of the critical power ratio (CPR). The computed maximum LHGR and minimum CPR are compared to values of other transients to establish operating limits for the reactor. The analysis determines the transient MCPR as a function of the rod block monitor setpoint.

15.4.2.3.2 Input Parameters and Initial Conditions

The number of possible RWE transients is large due to the number of control rods and the wide range of exposures and power levels. In order to encompass all of the possible RWEs which could conceivably occur, a limiting analysis is defined such that a conservative assessment of the consequences is provided. These conditions bound the effects of the RWE at lower power or flow conditions, including operation with only one reactor recirculation pump.

a. The assumed error is a continuous withdrawal of the maximum worth rod at its maximum drive speed;

b. The core is assumed to be operating at rated conditions;

c. The reactor is presumed to be in its most reactive state and devoid of all xenon. This ensures that the amount of reactivity is a maximum;

d. It is assumed that the operator has fully inserted the maximum worth rod prior to its removal and selected the remaining control rod pattern in such a way as to

approach thermal limits in the fuel bundles in the vicinity of the rod to be withdrawn (this control rod configuration would only be achieved by deliberate operator action or by numerous operator errors);

e. The operator is assumed to ignore all warnings during the transient;

f. Each RBM channel is analyzed and within each channel, LPRM failures are considered such that the worst case LPRM failures (a minimum of 4 LPRMs are required for the channel to be operable) for the least responsive RBM channel is considered when calculating the ΔCPR for each RBM setpoint. The channel with the greatest response is assumed to be bypassed.

15.4.2.3.2.1 Rod Block Monitor System Operation. The RBM system minimizes the consequences of a RWE by blocking motion of the control rod before the $MCPR_{99.9\%}$ are exceeded.

When the operator selects a control rod, the RBM signals (associated LPRM input) are calibrated to a fixed (constant) reference signal. The upscale trip levels are set at a fixed level above the reference and will vary as step functions of APRM simulated thermal power. The analytical limits are specified in References 15.4-17 and 15.4-18. This will allow longer withdrawals at low powers where thermal margins are high and allow only short withdrawals at high power. Once tripped, recalibration is allowed only by deselecting the rod, typically accomplished by selecting another rod, and reselecting the rod. Reselection will result in recalibration to the reference signal. The operator verifies adequate thermal margin before continuing rod withdrawal following an RBM upscale trip.

15.4.2.3.3 Results

At certain core exposures and power/flow conditions, this limiting transient may be a control RWE. The fuel thermal-mechanical limit (i.e., 1% cladding strain) criterion is met. Compliance with the event acceptance criteria is demonstrated by cycle-dependent analysis of potentially limiting events just prior to the operation of that cycle. The results are reported in the Supplemental Reload Licensing Report (Reference 15.4-16).

15.4.2.3.4 Considerations of Uncertainties

The conservative assumptions which ensure that this event has been conservatively analyzed have been previously discussed in Section 15.4.2.3.2.

15.4.2.4 Barrier Performance

An evaluation of the barrier performance was not made for this event since this is a localized event with very little change in the gross core characteristics. Typically, an increase in total core power is less than 6% and the changes in pressure are negligible.

15.4.2.5 Radiological Consequences

An evaluation of the radiological consequences is not required for this event since no radioactive material is released from the fuel.

15.4.3 CONTROL ROD MALOPERATION (SYSTEM MALFUNCTION OR OPERATOR ERROR)

This event is covered with the evaluation cited in Sections 15.4.1 and 15.4.2.

15.4.4 STARTUP OF IDLE RECIRCULATION PUMP

15.4.4.1 Identification of Causes and Frequency Classification

This event is not analyzed for reload cores. This event is bounded by the off-rated power and flow dependent limits. The slow flow runout analysis of two recirculation loops and the associated limits bounds this event because the heat flux change associated with two pumps increasing flow to the maximum bounds the heat flux change associated with a single pump startup. For the application of ARTS, the analysis basis is that there is an initial 50°F ΔT between the idle and operating loops. This is an appropriate assumption for the thermal limits calculations and it is consistent with Technical Specification requirements. The analysis basis is not expanded into the MELLLA domain because single loop operation is not expanded beyond the ELLLA domain. (Reference 15.4-17)

The event is not analyzed for power uprate to 3544 MWt (Reference 15.4-18).

15.4.4.1.1 Identification of Causes

This action results directly from the operator's manual action to initiate pump operation. It assumes that the remaining loop is already operating.

15.4.4.1.2 Frequency Classification

15.4.4.1.2.1 Normal Restart of Recirculation Pump at Power. This event is categorized as an incident of moderate frequency.

15.4.4.1.2.2 Abnormal Startup of Idle Recirculation Pump. This event is categorized as an incident of moderate frequency.

15.4.4.2 Sequence of Events and Systems Operation

15.4.4.2.1 Sequence of Events

Table 15.4-2 lists the sequence of events for Figure 15.4-1.

15.4.4.2.2 Systems Operation

This event assumes and takes credit for normal functioning of plant instrumentation and controls. No protection systems action is anticipated. No engineered safety feature (ESF) action occurs as a result of the event.

15.4.4.2.3 The Effect of Single Failures and Operator Errors

Attempts by the operator to start the pump at higher power levels will result in a reactor scram on flux.

15.4.4.3 Core and System Performance

15.4.4.3.1 Mathematical Model

The point-kinetics REDY model described in Section 15.0.3.3.1 is used to simulate this event.

15.4.4.3.2 Input Parameters and Initial Conditions

This analysis has been performed while the plant is operating with a single recirculation loop, at 57% uprated power and 34% core flow. Conservatively, the water in the idle loop is assumed to have a minimum temperature of 100°F. The average enthalpy is based on saturated water temperature at the suction inlet with a linear enthalpy gradient to the discharge outlet water temperature of 100°F.

The active recirculation loop is operating with a pump speed that produces about 45% of normal rated jet pump diffuser flow in the active jet pumps. The inactive recirculation loop jet pumps are forward flowing at about 2% of normal jet pump diffuser flow because of natural circulation affects. The core is receiving about 34% of its normal rated flow.

The idle recirculation pump suction and discharge block valves are open. Normal procedure requires leaving an idle loop in this condition to maintain the loop temperature within the required limits for restart.

15.4.4.3.3 Results

The transient response to the incorrect startup of a cold idle recirculation loop is shown in Figure 15.4-1. Shortly after the pump begins to move, the flow from the started jet pump diffusers causes the core inlet flow to increase. The pump startup demand is conservatively assumed to ramp at a rate of 3.3% until maximum pump speed is achieved. The diffuser flows on the started side of the reactor increase ultimately to about 144% of rated while the flow rate of the opposite loop diffusers decreases and eventually reverses to about -8% of rated. As the inactive loop pump increases speed the cold fluid is pumped out of the

recirculation loop piping and is mixed with hot downcomer fluid and the mixture flows to the core with a resulting increase of the core inlet subcooling.

A moderate-duration neutron flux peak to just above 122% of NB rated is produced as the colder, increasing core flow reduces the void volume. Surface heat flux follows the slower response of the fuel and peaks at 108% of rated before decreasing after the cold water is washed out of the loop at about 30 sec. No damage occurs to the fuel barrier as the MCPR remains substantially above the $MCPR_{99.9\%}$ limit.

15.4.4.3.4 Consideration of Uncertainties

This particular transient is analyzed for a maximum pump speed demand signal causing the ASD to adjust the recirculation pump speed upward at a nominal speed demand rate limit. A conservative idle loop temperature is assumed and no other uncertainties were included.

15.4.4.4 Barrier Performance

No evaluation of barrier performance is required for this event since no significant pressure increases are incurred during this transient. See Figure 15.4-1.

15.4.4.5 Radiological Consequences

Since this event does not result in any fuel failures or any release of primary coolant to either the secondary containment or to the environment, there are no radiological consequences associated with this event.

15.4.5 RECIRCULATION FLOW CONTROL FAILURE WITH INCREASING FLOW

15.4.5.1 Identification of Causes and Frequency Classification

15.4.5.1.1 Identification of Causes

An upscale failure of the master manual setpoint station can cause an increase in the core coolant flow rate. Upscale failure of an individual remote manual setpoint station or manual demand loop can also cause an increase in core coolant flow rate.

15.4.5.1.2 Frequency Classification

This event is an incident of moderate frequency.

15.4.5.2 Sequence of Events and Systems Operation

The increase in recirculation flow results in an increase in core flow. The increase in core flow causes an increase in core power level and shifts the power toward the top of the core by reducing the void fraction in the top of the core.

The rate and magnitude of the power increase are dependent on the rate and magnitude of the flow increase. The operator would be expected to control a slow or small increase through normal operating procedures. However, a rapid or significant increase in neutron flux could exceed the high flux scram setpoint and initiate a scram.

This analysis assumes a relatively gradual flow increase that challenges the thermal limits but does not initiate plant protective systems prior to operator action to terminate the transient. The turbine control (governor) valves and possibly the bypass valves open to control reactor pressure. Core power increases until a steady state power level is reached at the maximum recirculation flow. The operator then regains control of the flow control system and returns the plant to a normal operating condition.

The analysis of this event assumes and takes credit for normal functioning of plant instrumentation and controls, and the reactor protection system (RPS). Operation of ESF is not expected.

15.4.5.2.1 The Effect of Single Failures and Operator Errors

The greatest challenge to the thermal limits is the gradual flow increase without actuation of the RPS. The transient is terminated by operator action but not until the maximum core flow of 108.5% rated flow is reached. No actions, either automatic or manual, occur to mitigate the transient prior to event termination at the maximum core flow.

15.4.5.3 Core and System Performance

15.4.5.3.1 Mathematical Model

The core is assumed to be in a pseudo steady state condition in which all plant thermal hydraulics are in equilibrium. The feedwater inlet temperature is assumed to be at its equilibrium value at all power levels during the event. The flow control line used to define the power/flow points represents the steepest attainable during normal reactor operation. The core radial and axial peaking distributions are assumed not to change during the event. The MCPR hot channel analysis along the flow ascension path is calculated with ISCOR (References 15.4-4 and 15.4-14).

Only potentially MCPR limiting fuel is evaluated. Potentially limiting is defined as within 0.10 of the core MCPR for the nominal rated power rodded depletion (typically only fresh and

once burnt fuel). ISCOR is run at the power/flow level corresponding to the plant/cycle specific maximum flow and iterations are performed on the potentially MCPR limiting fuel channel radial peaking factor(s) such that the hot channel MCPR is equal to the $MCPR_{99.9\%}$ ± 0.005. ISCOR is then run along the specified flow control line at a range of core flows from 30% to 100% to obtain the potentially MCPR limiting fuel MCPR value(s) for each case. The results of this analysis determine the flow-dependent MCPR limits to assure that the MCPR will not fall below the $MCPR_{99.9\%}$ for a flow increase event. These analyses bound final feedwater temperature reduction (FFWTR) as well as normal feedwater temperature conditions. The LHGR along the flow ascension path is calculated using PANACEA (References 15.4-4 and 15.4-14) to perform a power search at 10% flow increments from 30% up to the maximum runout flow at various core exposures. Only bundles which could exceed the steady state LHGR limits after the event are considered in the statistical sample. A statistically based overpower or a bounding overpower is used in confirming the LHGR reduction factors. LHGR reduction factors are determined to ensure that 1% cladding strain and fuel centerline melt limits are not exceeded (Reference 15.4-17).

15.4.5.3.2 Input Parameters and Initial Conditions

The gradual increase in recirculation flow provides the greatest challenge to thermal limits. The final point in the transient is a power below the high flux scram setpoint at maximum flow. Maximum flow is the maximum flow that can be attained by a credible controller failure initiated from a given low flow starting point. A spectrum of initial, low flow starting points is analyzed at various points throughout the cycle. The analysis assumes that the event is quasi-steady state and that a flow biased scram does not occur. Table 15.4-3 contains a listing of the important input parameters and initial conditions.

15.4.5.3.3 Results

The reduced flow MCPR was calculated at discrete flow points. The reduced flow MCPR operating limit curve is shown in the cycle specific Core Operating Limits Report (COLR) for all cycle exposures, including FFWTR operation. The reduced flow LHGR was calculated at discrete flow points. The reduced flow LHGR operating limit is shown in the COLR.

15.4.5.3.4 Considerations of Uncertainties

The conservative nature of the analysis approach bounds the uncertainties in void reactivity and power distribution characteristics expected for actual plant conditions.

15.4.5.4 Barrier Performance

The reduced flow MCPR is established so that the event does not challenge the $MCPR_{99.9\%}$. Therefore, no fuel damage is predicted as a result of this event.

15.4.5.5 Radiological Consequences

An evaluation of the radiological consequences is not required for this event since no radioactive material is released.

15.4.6 CHEMICAL AND VOLUME CONTROL SYSTEM MALFUNCTIONS

This event is not applicable to boiling water reactor (BWR) plants.

15.4.7 MISPLACED BUNDLE ACCIDENT

The fuel loading error considers the consequences of either of two possible events: misorientation or mislocation of a fuel assembly. Further, the assumption is made that the error is not discovered during core verification. The purpose of the analysis is to determine the change in the minimum CPR and increase in LHGR between the correctly loaded core and the misloaded core. A combination of the misorientation and mislocation is not considered because of the very low probability of occurrence.

15.4.7.1 Identification of Causes and Frequency Classification

15.4.7.1.1 Identification of Causes

The event discussed in this section is the improper loading of a fuel bundle and subsequent operation of the core. For the mislocation of a fuel bundle, three errors must occur during the initial core loading. First, a bundle must be misloaded into a wrong position in the core. Second, the bundle that was supposed to be loaded where the mislocation occurred would have to be placed in an incorrect location. Third, the misplaced bundles would have to be overlooked during the core verification performed following core loading. For the misorientation of a fuel bundle, the bundle is loaded 180° from the correct orientation and this error is overlooked during the core verification.

A fuel loading error would place a fuel assembly in an incorrect location in the core, potentially placing several highly reactive assemblies in close proximity. If a relatively high reactivity assembly is placed in a location not directly monitored by the LPRM/core monitoring system (i.e., unmonitored location), this incorrectly located assembly will operate at higher powers with reduced thermal margins relative to the symmetric monitored assembly. The incorrectly located assembly may violate operating limits if the symmetric, monitored assembly is operated close to limits. If the incorrect location is a directly monitored cell, the change in the local power readings may not be sufficient to either alert the operators of the loading error or to completely account for the reduction in thermal margin. In this situation, the incorrectly located assembly may violate operating limits while being treated by the monitoring system as if it were correctly loaded.

15.4.7.1.2 Frequency of Occurrence

This event is categorized as an infrequent incident but is analyzed for GNF reloads consistent with Section 15.3.3.1 as an incident of moderate frequency.

15.4.7.2 Sequence of Events and Systems Operation

A fuel bundle is misloaded (incorrect location or orientation) into the core and the error is not identified during the core verification process. The core is operated through the cycle at the conditions assumed for the reference core (the specified core load) with the control rod sequence developed for the reference core. At some point during the cycle, the control rod sequence places the limiting assembly (being monitored by the core monitoring system as a correctly loaded assembly) at the MCPR operating limit. Potentially, this causes the misloaded assembly to be operated below the MCPR operating limit curve and above the design LHGR limit curve. Because the operator may be unable to detect the error, the core operation continues throughout the cycle.

Fuel loading errors, undetected by in-core instrumentation following fueling operations, may result in undetected reductions in thermal margins during power operations. No detection is assumed, and therefore, no corrective operator action or automatic protection system functioning occurs.

15.4.7.2.1 Effect of Single Failure and Operator Errors

This analysis already represents the worst case (i.e., operation with a misplaced bundle requires multiple equipment failures or operator errors).

15.4.7.3 Core and System Performance

15.4.7.3.1 Mathematical Model

A three-dimensional BWR simulator model is used to calculate the core performance resulting from this event. This model is described in detail in Reference 15.4-4 and Sections S.2.2.1.8 and S.2.2.1.9 of Reference 15.4-5.

15.4.7.3.2 Input Parameters and Initial Conditions

Initial input parameters and conditions are cycle specific. Sections S.2.2.1.8 and S.2.2.1.9 of Reference 15.4-5 describe the input parameters and initial conditions applied to the mislocated and misoriented bundle events. For both the mislocated and misoriented bundle events, the fuel loading error is undetected throughout the cycle by the core monitoring system.

15.4.7.3.3 Results

The results of the analyses for the fuel loading errors show that the resulting MCPR does not challenge the $MCPR_{99.9\%}$. No rods are expected to exceed the LHGR limits. Results reflect GE14 fuel introduction, some of which are dependent on fuel design and core loading pattern.

Compliance with the event acceptance criteria is demonstrated by cycle-dependent analysis of potentially limiting events just prior to the operation of that cycle. The results are reported in the Supplemental Reload Licensing Report (Reference 15.4-16).

15.4.7.3.4 Considerations of Uncertainties

A sufficient number of mislocated assembly cases are considered to assure that the limiting case is evaluated. The mislocated assemblies are loaded into positions that could produce limiting results. For the misoriented assembly case, the gap sizes resulting from the rotation are selected to assure a conservative estimate of the impact on MCPR.

15.4.7.4 Barrier Performance

An evaluation of the barrier performance was not made for this event since it is a mild and highly localized event. No perceptible change in the core pressure would be observed.

15.4.7.5 Radiological Consequences

An evaluation of the radiological consequences is not required for this event since no radioactive material is released from the fuel.

15.4.8 SPECTRUM OF ROD EJECTION ASSEMBLIES

This event is not applicable to BWR plants.

15.4.9 CONTROL ROD DROP ACCIDENT

15.4.9.1 Identification of Causes and Frequency Classification

15.4.9.1.1 Identification of Causes

The control rod drop accident (CRDA) is the result of a high worth control rod decoupled from the drive mechanism, dropping out of the core. The subsequent insertion of positive reactivity causes a localized power excursion. This is not an anticipated event because of the system failures and personnel errors that would have to occur in combination to present the reactivity required at the same time that the coupling failed. The control rod patterns are controlled in accordance with the banked position withdraw sequence (BPWS) to preclude situations in which rod drops would have sufficient reactivity to cause the damage postulated by the power excursion.

Detailed discussions of the rod drop analysis and BPWS are given in Reference 15.4-3 and 15.4-7.

15.4.9.1.2 Frequency Classification

The CRDA is categorized as a limiting fault because it is not expected to occur during the lifetime of the plant. However, postulated consequences include the potential for the release of radioactive material.

For reactivity anomalies, the CRDA is the limiting event.

15.4.9.2 Sequence of Events and Systems Operation

The CRDA assumptions include:

1. At some time, a fully inserted control rod becomes decoupled from its drive and sticks in the fully inserted position.

2. During the start up sequence, the rod patterns employed are permitted by the constraints on rod movements by technical specifications and the rod sequence control hardware, including the maximum allowable number of bypassed rods. At some time under critical reactor conditions, the rod pattern causes the decoupled rod to have the maximum worth from fully inserted to the position of its drive. The rod worth minimizer is not functioning. The rod drops at that time.

3. The reactor goes on a positive period, and the fuel temperature reactivity feedback terminates the initial power burst.

4. The reactor scrams on the APRM high flux scram signal.

5. All withdrawn rods, except for the decoupled rod, scram at the technical specification rate.

6. The scram terminates the accident.

7. If the mechanical vacuum pump (MVP) is maintaining condenser vacuum (e.g., the plant was operating at 5% power or less) and the main steam line radiation (MSLR) monitors detected radiation levels above the setpoint, the MSLR monitors would trip the MVP to reduce the fission product release from the condenser.

Although other normal plant instrumentation and controls are assumed to function, no credit for their operation is taken in the analysis of this event. No operator actions are required to terminate this event. Subsequent to reactor scram which terminates the event, normal vessel inventory makeup systems will be used as available.

15.4.9.2.1 Effect of Single Failures and Operator Errors

As discussed, the event is terminated, and therefore mitigated, by the APRM high flux scram signal to RPS. The RPS design meets the single failure criteria. The event is further mitigated by an initial control rod configuration that complies with the BPWS. The withdrawal (or insertion) sequence is implemented by the operator and enforced by the RWM. An operator error in control rod movement will be detected and stopped by the RWM. If the RWM system is not operable, rod movement can only continue with a backup for the operator verifying compliance with the BPWS sequence. Failure of the RWM concurrent with an operator error of moving an out-of-sequence rod, contrary to procedures would be required to result in a potentially more limiting event. Therefore, sufficient redundancy exists such that termination of this transient within the limiting criteria is assured.

At low power levels, the MVP trip maintains the condenser leak rates within the analytical assumptions. The MSLR monitor design meets the single failure criteria and no active failure would prevent the trip signal (Section 11.5.2.1).

15.4.9.3 Core and System Performance

15.4.9.3.1 Mathematical Model

The analytical methods, assumptions and conditions for evaluating the excursion aspects of the CRDA are described in detail in References 15.4-1, 15.4-3, 15.4-13. To limit the worth of the postulated dropped rod, the rod pattern control systems are programmed to follow the BPWS, which is generically defined in Reference 15.4-7.

15.4.9.3.2 Input Parameters and Initial Conditions

The data presented in Reference 15.4-7 shows that BPWS reduces the control rod worths to the degree that the detailed analyses presented in References 15.4-1, 15.4-3, 15.4-13 or the bounding analyses presented in Reference 15.4-11 do not need to be performed each cycle.

15.4.9.3.3 Results

Control rod drop accident results from BPWS plants have been statistically analyzed and documented in Reference 15.4-12. The results show that, in all cases, the peak fuel enthalpy in a CRDA would be much less than the 280 cal/gm design limit even with a maximum incremental rod worth corresponding to 95% probability at the 95% confidence level. Based on these results, it was proposed to the NRC, and subsequently found acceptable, to delete the CRDA from the standard GE BWR reload package for the BPWS plants.

The US Supplement to Reference 15.4-5 reports the results of radiological analyses for initial cores that are orders of magnitude below those identified in 10 CFR 100. The radiological consequences of the CRDA, assuming a full core of more recent GE/GNF fuel designs, are discussed in Reference 15.4-5. With implementation of Alternative Source Term (AST), the radiological release acceptance criterion becomes 10 CFR 50.67. An evaluation of fuel damage was performed because the maximum deposited fuel rod enthalpy exceeded 170 cal/gm, which is the enthalpy limit assumed for eventual cladding perforation. The number of fuel rods predicted to fail (Reference 15.4-15) are bounded by the number assumed in the radiological consequences analysis for this event.

The total energy deposited and the associated increase in reactor system pressure during a rod drop event is not high relative to other events such as turbine trip without bypass or main steam line isolation valve closure, both of which are quantitatively analyzed. As such, the increase in reactor system pressure is not anticipated to result in penetration of the stress limits defined in Section III of the ASME boiler and pressure code.

15.4.9.4 Barrier Performance

An evaluation of the barrier performance was not made for this accident since this is a localized event with no significant change in the gross core temperature or pressure.

15.4.9.5 Radiological Consequences

The radiological analysis is based on the AST described in Reference 15.4-8. Specific models, assumptions, and the program used for computer evaluation are described in Reference 15.4-6. Specific parametric values used in the evaluation are presented in Table 15.4-4. The radiological consequences remain bounding because cycle specific analyses have confirmed that the number of fuel rods with an enthalpy greater than the threshold for fuel failure are well below the number assumed in the analysis.

15.4.9.5.1 Fission Product Release from Fuel

The failure of 1.8% of the core was assumed for this analysis. The mass fraction of the fuel in the damaged rods which reaches or exceeds the initiation temperature of fuel melting (taken as 2804°C) is assumed to be 0.0077.

Fuel reaching melt condition is assumed to release 100% of the noble gas inventory and 50% of the iodine inventory. The remaining fuel rods with clad damage only (no melting), will undergo a gap release which is assumed to release 10% of noble gases and 10% of iodine inventories.

The core inventory of fission products is based on a plant-specific ORIGEN 2 run for pre-power uprate basis of 3489 MW with 1000 days of exposure, adjusted as follows:

- A scale factor of 1.0528 to bound the dose impact of power level to 3556 MWt,
- A correction to increase by 25 percent short-lived krypton values (based on comparisons to other core inventory tables), and
- An increase by 60% in the activity of longer lived isotopes to bound longer plant operation at a higher burnup rate.

The assumed core power of 3556 MWt is the rated power plus power measurement uncertainties. These adjustments resulted in a conservative source term (in terms of activity available). A peaking factor of 1.7 is assumed and no delay time is considered between departure from that power condition and the initiation of the accident.

15.4.9.5.2 Fission Product Transport to the Environment

The transport pathway consists of a release from the core to the coolant, carryover with steam to the turbine condenser and leakage from the condenser to the environment. The release fractions are given in Reference 15.4-6 and are consistent with Reference 15.4-8. No credit is taken for mixing in the turbine building or filtration by the CREF.

Of the activity reaching the condenser, 100% of the noble gases, and 10% of the iodine (due to partitioning and plate-out) and 1% of the particulates remain airborne and are available for release to the environment. The activity airborne in the condenser leaks to the environment as a ground level release at a rate of 1% of condenser volume per day. Release from the condenser is assumed to terminate 24 hours following the onset of the accident. Radioactive decay is accounted for during residence in the condenser; however, it is neglected after release to the environment. If the condenser is not isolated from the offgas system, the activity is processed through the offgas system. In this case, radioactive decay is accounted for during the residence in the offgas system. Response of the offgas system to elevated radiation levels is described in Section 11.3.2.4.5.

The activity airborne in the condenser is presented in Table 15.4-5. The cumulative release of activity to the environment is presented in Table 15.4-6.

15.4.9.5.3 Results

The calculated exposures from the design basis analysis are presented in Table 15.4-7 and are within the limits of 10 CFR 50.67.

15.4.10 REFERENCES

15.4-1 Stirn, R. C., "Rod Drop Accident Analysis for Large Boiling Water Reactors," NEDO-10527, March 1972.

15.4-2 GE Nuclear Energy, "WNP-2 Power Uprate Transient Analysis Task Report," GE-NE-208-08-0393, September 1993 (Proprietary).

15.4-3 Stirn, R. C., "Rod Drop Accident Analysis for Large BWRs," Supplement 1, NEDO-10527, July 1972.

15.4-4 "Steady -State Nuclear Methods," NEDE-30130-P-A, April 1985.

15.4-5 "General Electric Standard Application for Reactor Fuel," NEDE-24011-P-A and "Supplement for United States," NEDE-24011-P-A-US (most recent approved version referenced in COLR).

15.4-6 Energy Northwest, "Columbia Generating Station Alternative Source Term," CGS-FTS-0168, Revision 2, June 2011.

15.4-7 Paone, C. J., "Bank Position Withdrawal Sequence," NEDO-21231.

15.4-8 NRC Regulatory Guide 1.183, "Alternative Source Term for Evaluating Design Basis Accidents at Nuclear Power Reactors," July 2000.

15.4-9 Deleted.

15.4-10 General Electric, "Safety Evaluation for Eliminating the Boiling Water Reactor Main Steam Isolation Valve Closure Function and Scram Function of the Main Steam Line Radiation Monitor," NEDO-31400A, Class I, October 1992.

15.4-11 "GE BWR Generic Reload Application for 8x8 Fuel," Supplement 3 to Revision 1, NEDO-20360.

15.4-12 Letter from R. E. Engel (GE) to D. M. Vassallo (NRC), "Elimination of Control Rod Drop Accident Analysis for Banked Position Withdrawal Sequence Plants," February 24, 1982.

15.4-13 Stirn, R. C., "Rod Drop Accident Analysis for Large Boiling Water Reactors Addendum No. 2 Exposed Cores," Supplement 2, NEDO-10527, January 1973.

15.4-14 Letter from D. G. Eisenhut (NRC) to R. L. Gridley (GE), "Safety Evaluation for the General Electric Topical Report, Generic Reload Fuel Application (NEDE-24011-P)," May 12, 1978, MFN-212-78.

15.4-15 "GNF2 Advantage Generic Compliance with NEDE-24011-P-A (GESTAR II)," NEDC-33270P (most recent version referenced in COLR).

15.4-16 Supplemental Reload Licensing Report for Columbia (most recent version referenced in COLR).

15.4-17 "Energy Northwest Columbia Generating Station APRM/RBM/Technical Specifications/Maximum Extended Load Line Limit Analysis (ARTS/MELLLA)," NEDC-33507P, Revision 0, April 2010.

15.4-18 GE-Hitachi Nuclear Energy, "Safety Analysis Report for Columbia Generating Station Thermal Power Optimization," NEDC-33853P, March 2016.

Table 15.4-1

Sequence of Events - Rod Withdrawal Error in Power Range

Time[a]	Event
(1)	Event begins; operator selects the maximum worth control rod, acknowledges any alarms and withdraws the rod at the maximum rod speed.
(2)	Core average power and local power increase causing LPRM alarm.
(3)	Event ends – rod block by RBM

[a] The RWE event is analyzed with a three-dimensional core simulator. This is a conservative steady state analysis for the determination of the appropriate power distribution limits during the event. Since it is not a dynamic simulation, no timed sequence of events is available.

Table 15.4-2

Sequence of Events for an Abnormal Startup
of an Idle Recirculation Loop

Time (sec)	Event
0.00	Plant operating with one recirculation loop only.
5.00	Start idle recirculation loop pump motor.
29.6	Peak value of core inlet subcooling.
29.6	Peak thermal power. Estimated APRM thermal power approximately 1% below APRM thermal power setpoint.
45.7	Pump motor at full speed.
80+	Reactor reaches new equilibrium condition.

Table 15.4-3

Reactor Recirculation Pump Flow Increase
Input Parameters and Initial Conditions

Parameter	Value
Reactor Power/Core Flow	Flow increase is initiated from several power/flow points and terminates at 109% rated power, 108.5% rated flow
Power Distribution	The MCPR equals the $MCPR_{99.9\%}$ at the final power/flow condition
Reactivity	The results are applicable from Beginning of Cycle to End of Cycle for nominal and reduced feedwater temperatures
Control Rod Configuration	The control rod pattern is the same at the initial and final points.

Table 15.4-4

Control Rod Drop Accident Evaluation Parameters

I.	Data and assumptions used to estimate radioactive source from postulated accidents.		
	A.	Power level	Section 15.4.9.5.1
	B.	Burnup	Section 15.4.9.5.1
	C.	Fuel damaged	1.8% of core
	D.	Release of activity by nuclide	Table 15.4-6
	E.	Iodine fractions	
		(1) Organic	0.0015
		(2) Elemental	0.0485
		(3) Particulate	0.95
	F.	Reactor coolant activity before the accident.	N/A
II.	Data and assumptions used to estimate activity released.		
	A.	Condenser leak rate (%/day)	1.0
	B.	Turbine building leak rate (%/day)	N/A
	C.	Valve closure time (sec)	N/A
	D.	Adsorption and filtration efficiencies	
		(1) Organic iodine	N/A
		(2) Elemental iodine	N/A
		(3) Particulate iodine	N/A
		(4) Particulate fission products	N/A
	E.	Recirculation system parameters	
		(1) Flow rate	N/A
		(2) Mixing efficiency	N/A
		(3) Filter efficiency	N/A
	F.	Containment spray parameters (flow rate, drop size, etc.)	N/A

Table 15.4-4

Control Rod Drop Accident Evaluation Parameters (Continued)

	G.	Containment volumes	N/A
	H.	All other pertinent data and assumptions	None
III.	Dispersion data		Table 15.0-4
IV.	Dose data		
	A.	Method of dose calculation	Reference 15.4-6
	B.	Dose conversion assumptions	Reference 15.4-6
	C.	Peak activity concentrations in condenser	Table 15.4-5
	D.	Doses	Table 15.4-7

Table 15.4-5

Control Rod Drop Accident
Activity Airborne in the Condenser (Curies)

3556 MWth

	1 m	30 m	2 hrs	8 hrs	12 hrs	24 hrs
Kr83m	4.12E+04	3.43E+04	1.96E+04	2.06E+03	4.61E+02	5.13E+00
Kr85m	8.50E+04	7.88E+04	6.21E+04	2.40E+04	1.27E+04	1.90E+03
Kr85	4.77E+03	4.77E+03	4.76E+03	4.75E+03	4.74E+03	4.72E+03
Kr87	1.54E+05	1.18E+05	5.20E+04	1.95E+03	2.18E+02	3.05E-01
Kr88	2.19E+05	1.95E+05	1.34E+05	3.03E+04	1.12E+04	5.72E+02
Kr89	2.05E+05	3.71E+02	1.14E-06	6.96E-18	1.01E-16	7.70E-18
Xe131m	3.24E+03	3.23E+03	3.22E+03	3.16E+03	3.13E+03	3.02E+03
Xe133m	1.93E+04	1.91E+04	1.88E+04	1.74E+04	1.65E+04	1.41E+04
Xe133	6.30E+05	6.28E+05	6.23E+05	6.01E+05	5.87E+05	5.47E+05
Xe135m	1.23E+05	3.40E+04	6.24E+02	7.12E-05	1.68E-09	2.52E-16
Xe135	1.52E+05	1.46E+05	1.31E+05	8.30E+04	6.13E+04	2.47E+04
Xe137	4.52E+05	2.62E+03	2.99E-04	4.13E-18	3.26E-17	2.41E-17
Xe138	4.00E+05	1.22E+05	3.11E+03	1.30E-03	7.24E-08	2.47E-18
Total noble gases	2.49E+06	1.39E+06	1.05E+06	7.68E+05	6.97E+05	5.96E+05
I-131*	3.06E+05	2.64E+05	1.83E+05	8.50E+04	6.15E+04	2.47E+04
I-132	6.71E+05	1.98E+05	1.34E+05	3.03E+04	1.12E+04	5.72E+02
I-133	6.05E+05	1.22E+05	3.11E+03	1.30E-03	7.24E-08	1.02E-17
I-134	3.24E+03	3.23E+03	3.22E+03	3.16E+03	3.13E+03	3.02E+03
I-135	2.51E+06	1.41E+06	1.07E+06	7.85E+05	7.14E+05	6.10E+05
Total Iodine	4.09E+06	1.99E+06	1.39E+06	9.03E+05	7.90E+05	6.38E+05

* The isotopic iodine activity is the sum of the elemental and organic iodines with 97% elemental and 3% organic.
The particulate iodine comprise 0%.

Table 15.4-5

Control Rod Drop Accident
Activity Airborne in the Condenser (Curies) (Continued)

3556 MWth

	1 m	30 m	2 hrs	8 hrs	12 hrs	24 hrs
Rb86	5.87E-02	5.86E-02	5.84E-02	5.77E-02	5.73E-02	5.60E-02
Cs134	8.23E+00	8.23E+00	8.22E+00	8.20E+00	8.18E+00	8.14E+00
Cs136	1.82E+00	1.82E+00	1.81E+00	1.79E+00	1.77E+00	1.71E+00
Cs137	6.63E+00	6.63E+00	6.62E+00	6.61E+00	6.59E+00	6.56E+00
Sb127	1.38E-02	1.38E-02	1.36E-02	1.30E-02	1.26E-02	1.14E-02
Sb129	3.95E-02	3.66E-02	2.88E-02	1.10E-02	5.84E-03	8.61E-04
Te127m	1.95E-03	1.95E-03	1.94E-03	1.94E-03	1.93E-03	1.91E-03
Te127	1.38E-02	1.38E-02	1.38E-02	1.36E-02	1.34E-02	1.25E-02
Te129m	5.81E-03	5.80E-03	5.79E-03	5.75E-03	5.72E-03	5.63E-03
Te129	3.72E-02	3.74E-02	3.43E-02	1.52E-02	8.10E-03	1.20E-03
Te131m	1.75E-02	1.73E-02	1.67E-02	1.45E-02	1.32E-02	9.97E-03
Te132	1.67E-01	1.66E-01	1.64E-01	1.55E-01	1.49E-01	1.33E-01
Ba137m	1.54E+00	6.62E+00	6.62E+00	6.61E+00	6.59E+00	6.56E+00
Ba139	7.82E-02	6.14E-02	2.90E-02	1.43E-03	1.94E-04	4.75E-07
Ba140	7.65E-02	7.64E-02	7.61E-02	7.49E-02	7.41E-02	7.17E-02
Mo99	1.02E-02	1.02E-02	1.00E-02	9.39E-03	8.99E-03	7.90E-03
Tc99m	9.06E-03	9.12E-03	9.27E-03	9.45E-03	9.33E-03	8.55E-03
Ru103	9.81E-03	9.81E-03	9.79E-03	9.72E-03	9.68E-03	9.55E-03
Ru105	7.21E-03	6.69E-03	5.33E-03	2.14E-03	1.16E-03	1.87E-04
Ru106	4.26E-03	4.26E-03	4.26E-03	4.24E-03	4.23E-03	4.21E-03
Rh105	6.83E-03	6.83E-03	6.80E-03	6.42E-03	6.04E-03	4.87E-03
Y90	3.50E-05	6.38E-05	1.52E-04	4.90E-04	7.02E-04	1.28E-03
Y91	4.56E-04	4.66E-04	4.95E-04	5.82E-04	6.22E-04	6.87E-04
Y92	6.39E-04	4.76E-03	1.26E-02	1.28E-02	7.81E-03	1.10E-03
Y93	5.94E-04	5.74E-04	5.18E-04	3.42E-04	2.59E-04	1.13E-04
Zr95	7.13E-04	7.13E-04	7.12E-04	7.08E-04	7.06E-04	6.98E-04
Zr97	7.23E-04	7.09E-04	6.66E-04	5.21E-04	4.42E-04	2.70E-04

Table 15.4-5

Control Rod Drop Accident
Activity Airborne in the Condenser (Curies) (Continued)

3556 MWth

	1 m	30 m	2 hrs	8 hrs	12 hrs	24 hrs
Nb95	7.13E-04	7.13E-04	7.13E-04	7.11E-04	7.10E-04	7.06E-04
La140	8.08E-04	1.43E-03	3.33E-03	1.04E-02	1.46E-02	2.54E-02
La141	7.26E-04	6.66E-04	5.10E-04	1.75E-04	8.58E-05	1.01E-05
La142	6.91E-04	5.55E-04	2.81E-04	1.84E-05	3.00E-06	1.29E-08
Pr143	6.31E-04	6.32E-04	6.35E-04	6.44E-04	6.49E-04	6.58E-04
Nd147	2.86E-04	2.85E-04	2.84E-04	2.79E-04	2.76E-04	2.66E-04
Am241	1.28E-07	1.28E-07	1.28E-07	1.28E-07	1.27E-07	1.27E-07
Cm242	2.91E-05	2.91E-05	2.90E-05	2.89E-05	2.89E-05	2.87E-05
Cm244	2.36E-06	2.35E-06	2.35E-06	2.35E-06	2.34E-06	2.33E-06
Ce141	1.85E-03	1.85E-03	1.85E-03	1.83E-03	1.82E-03	1.80E-03
Ce143	1.67E-03	1.66E-03	1.60E-03	1.40E-03	1.28E-03	9.85E-04
Ce144	1.36E-03	1.36E-03	1.36E-03	1.35E-03	1.35E-03	1.34E-03
Np239	2.93E-02	2.91E-02	2.85E-02	2.64E-02	2.51E-02	2.15E-02
Pu238	3.99E-06	3.99E-06	3.99E-06	3.98E-06	3.97E-06	3.95E-06
Pu239	7.89E-07	7.89E-07	7.89E-07	7.87E-07	7.85E-07	7.82E-07
Pu240	1.30E-06	1.30E-06	1.30E-06	1.29E-06	1.29E-06	1.29E-06
Pu241	3.70E-04	3.70E-04	3.69E-04	3.68E-04	3.68E-04	3.66E-04
Sr89	3.37E-02	3.37E-02	3.37E-02	3.35E-02	3.33E-02	3.29E-02
Sr90	5.58E-03	5.58E-03	5.57E-03	5.56E-03	5.55E-03	5.52E-03
Sr91	4.32E-02	4.17E-02	3.74E-02	2.42E-02	1.81E-02	7.54E-03
Sr92	5.01E-02	4.41E-02	2.97E-02	6.14E-03	2.15E-03	9.15E-05

Table 15.4-6

Control Rod Drop Accident
Activity Airborne to the Environment (Curies)

3556 MWth

	1 m	0.5 hr	2 hrs	8 hrs	12 hrs	24 hrs
Kr83m	2.78E-01	7.86E+00	2.43E+01	4.38E+01	4.56E+01	4.61E+01
Kr85m	5.74E-01	1.71E+01	6.09E+01	1.61E+02	1.91E+02	2.19E+02
Kr85	3.21E-02	9.92E-01	3.97E+00	1.59E+01	2.38E+01	4.75E+01
Kr87	1.04E+00	2.83E+01	7.87E+01	1.17E+02	1.18E+02	1.18E+02
Kr88	1.48E+00	4.31E+01	1.45E+02	3.20E+02	3.52E+02	3.69E+02
Kr89	1.54E+00	8.07E+00	8.08E+00	8.08E+00	8.08E+00	8.08E+00
Xe131m	2.18E-02	6.73E-01	2.69E+00	1.07E+01	1.59E+01	3.13E+01
Xe133m	1.30E-01	4.00E+00	1.58E+01	6.10E+01	8.92E+01	1.66E+02
Xe133	4.24E+00	1.31E+02	5.22E+02	2.05E+03	3.04E+03	5.88E+03
Xe135m	8.48E-01	1.48E+01	2.00E+01	2.01E+01	2.01E+01	2.01E+01
Xe135	1.02E+00	3.10E+01	1.18E+02	3.80E+02	5.00E+02	7.01E+02
Xe137	3.32E+00	2.09E+01	2.10E+01	2.10E+01	2.10E+01	2.10E+01
Xe138	2.75E+00	5.00E+01	7.03E+01	7.08E+01	7.08E+01	7.08E+01
Total Noble Gases	1.73E+01	3.58E+02	1.09E+03	3.28E+03	4.50E+03	7.70E+03
I-131*	4.08E-01	1.19E+01	4.01E+01	1.05E+02	1.35E+02	2.12E+02
I-132	4.81E+00	1.48E+02	5.83E+02	2.21E+03	3.23E+03	6.10E+03
I-133	8.80E-01	1.58E+01	2.40E+01	3.60E+01	4.39E+01	6.76E+01
I-134	2.06E+00	5.93E+01	1.97E+02	4.97E+02	6.18E+02	8.19E+02
I-135	4.80E+00	6.40E+01	1.66E+02	3.41E+02	3.73E+02	3.90E+02
Total Iodine	1.30E+01	2.99E+02	1.01E+03	3.19E+03	4.40E+03	7.59E+03

* The isotopic iodine activity is the sum of the elemental and organic iodines with 97% elemental and 3% organic.
The particulate iodine comprise 0%.

Table 15.4-6

Control Rod Drop Accident
Activity Airborne to the Environment (Curies) (Continued)

3556 MWth

	1 m	0.5 hr	2 hrs	8 hrs	12 hrs	24 hrs
Rb86	3.95E-07	1.22E-05	4.88E-05	1.94E-04	2.90E-04	5.73E-04
Cs134	5.54E-05	1.71E-03	6.86E-03	2.74E-02	4.11E-02	8.19E-02
Cs136	1.23E-05	3.79E-04	1.52E-03	6.02E-03	8.99E-03	1.77E-02
Cs137	4.47E-05	1.38E-03	5.52E-03	2.21E-02	3.31E-02	6.60E-02
Sb127	9.31E-08	2.87E-06	1.14E-05	4.47E-05	6.60E-05	1.26E-04
Sb129	2.66E-07	7.92E-06	2.83E-05	7.46E-05	8.82E-05	1.01E-04
Te127m	1.31E-08	4.05E-07	1.62E-06	6.48E-06	9.70E-06	1.93E-05
Te127	9.31E-08	2.88E-06	1.15E-05	4.58E-05	6.83E-05	1.33E-04
Te129m	3.91E-08	1.21E-06	4.83E-06	1.93E-05	2.88E-05	5.72E-05
Te129	2.50E-07	7.77E-06	3.04E-05	9.08E-05	1.10E-04	1.28E-04
Te131m	1.18E-07	3.63E-06	1.43E-05	5.33E-05	7.65E-05	1.34E-04
Te132	1.12E-06	3.46E-05	1.38E-04	5.35E-04	7.88E-04	1.49E-03
Ba137m	5.43E-06	1.21E-03	5.35E-03	2.19E-02	3.29E-02	6.58E-02
Ba139	5.29E-07	1.45E-05	4.15E-05	6.44E-05	6.55E-05	6.56E-05
Ba140	5.15E-07	1.59E-05	6.36E-05	2.53E-04	3.77E-04	7.41E-04
Mo99	6.89E-08	2.12E-06	8.44E-06	3.27E-05	4.80E-05	9.02E-05
Tc99m	6.11E-08	1.89E-06	7.65E-06	3.12E-05	4.69E-05	9.18E-05
Ru103	6.61E-08	2.04E-06	8.17E-06	3.26E-05	4.88E-05	9.69E-05
Ru105	4.86E-08	1.45E-06	5.19E-06	1.39E-05	1.66E-05	1.93E-05
Ru106	2.87E-08	8.87E-07	3.55E-06	1.42E-05	2.13E-05	4.24E-05
Rh105	4.60E-08	1.42E-06	5.68E-06	2.23E-05	3.27E-05	6.00E-05
Y90	2.33E-10	1.02E-08	7.78E-08	8.86E-07	1.88E-06	6.88E-06
Y91	3.07E-09	9.60E-08	3.97E-07	1.75E-06	2.76E-06	6.06E-06
Y92	3.78E-09	5.63E-07	6.33E-06	4.33E-05	6.04E-05	7.81E-05
Y93	4.00E-09	1.22E-07	4.63E-07	1.52E-06	2.02E-06	2.90E-06

Table 15.4-6

Control Rod Drop Accident
Activity Airborne to the Environment (Curies) (Continued)

3556 MWth

	1 m	0.5 hr	2 hrs	8 hrs	12 hrs	24 hrs
Zr95	4.81E-09	1.48E-07	5.94E-07	2.37E-06	3.55E-06	7.06E-06
Zr97	4.87E-09	1.49E-07	5.79E-07	2.06E-06	2.86E-06	4.60E-06
Nb95	4.81E-09	1.48E-07	5.94E-07	2.38E-06	3.56E-06	7.10E-06
La140	5.37E-09	2.31E-07	1.72E-06	1.91E-05	4.00E-05	1.41E-04
La141	4.90E-09	1.45E-07	5.11E-07	1.29E-06	1.50E-06	1.68E-06
La142	4.67E-09	1.30E-07	3.81E-07	6.23E-07	6.37E-07	6.40E-07
Pr143	4.25E-09	1.32E-07	5.28E-07	2.13E-06	3.21E-06	6.48E-06
Nd147	1.92E-09	5.94E-08	2.37E-07	9.42E-07	1.40E-06	2.76E-06
Am241	8.63E-13	2.67E-11	1.07E-10	4.27E-10	6.39E-10	1.28E-09
Cm242	1.96E-10	6.05E-09	2.42E-08	9.67E-08	1.45E-07	2.89E-07
Cm244	1.59E-11	4.90E-10	1.96E-09	7.84E-09	1.18E-08	2.34E-08
Ce141	1.25E-08	3.85E-07	1.54E-06	6.15E-06	9.20E-06	1.83E-05
Ce143	1.13E-08	3.47E-07	1.37E-06	5.12E-06	7.36E-06	1.30E-05
Ce144	9.15E-09	2.83E-07	1.13E-06	4.52E-06	6.77E-06	1.35E-05
Np239	1.97E-07	6.07E-06	2.41E-05	9.28E-05	1.36E-04	2.52E-04
Pu238	2.69E-11	8.31E-10	3.33E-09	1.33E-08	1.99E-08	3.98E-08
Pu239	5.32E-12	1.64E-10	6.58E-10	2.63E-09	3.94E-09	7.86E-09
Pu240	8.75E-12	2.70E-10	1.08E-09	4.33E-09	6.48E-09	1.29E-08
Pu241	2.49E-09	7.69E-08	3.08E-07	1.23E-06	1.85E-06	3.68E-06
Sr89	2.27E-07	7.02E-06	2.81E-05	1.12E-04	1.68E-04	3.34E-04
Sr90	3.76E-08	1.16E-06	4.65E-06	1.86E-05	2.78E-05	5.55E-05
Sr91	2.91E-07	8.84E-06	3.36E-05	1.09E-04	1.44E-04	2.05E-04
Sr92	3.38E-07	9.81E-06	3.26E-05	7.00E-05	7.63E-05	7.96E-05

Table 15.4-7

Control Rod Drop Accident
Radiological Effects (rem)

Area	Time	TEDE Dose
Exclusion area (1950 m)	2 hr	0.03
Low population zone (4827 m)	30 days	0.03
Control Room	30 days	0.7

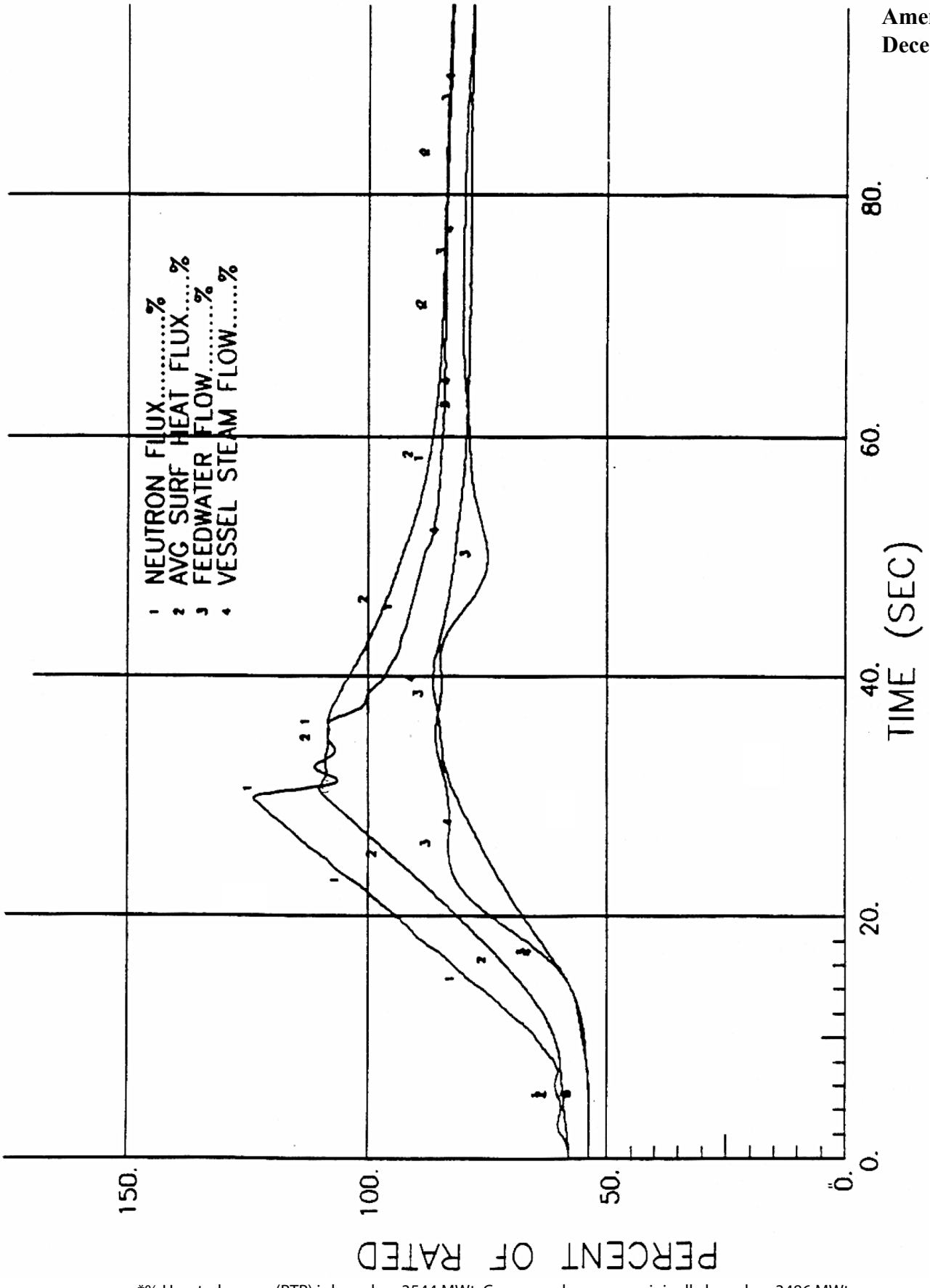

*% Uprated power (RTP) is based on 3544 MWt. Curves as shown are originally based on 3486 MWt.

Columbia Generating Station Final Safety Analysis Report	**Abnormal Startup of an Idle Recirculation Loop at *56.95% Uprated Power, 34.1% Flow**		
	Draw. No. 020002.03	**Rev.**	**Figure 15.4-1.1**

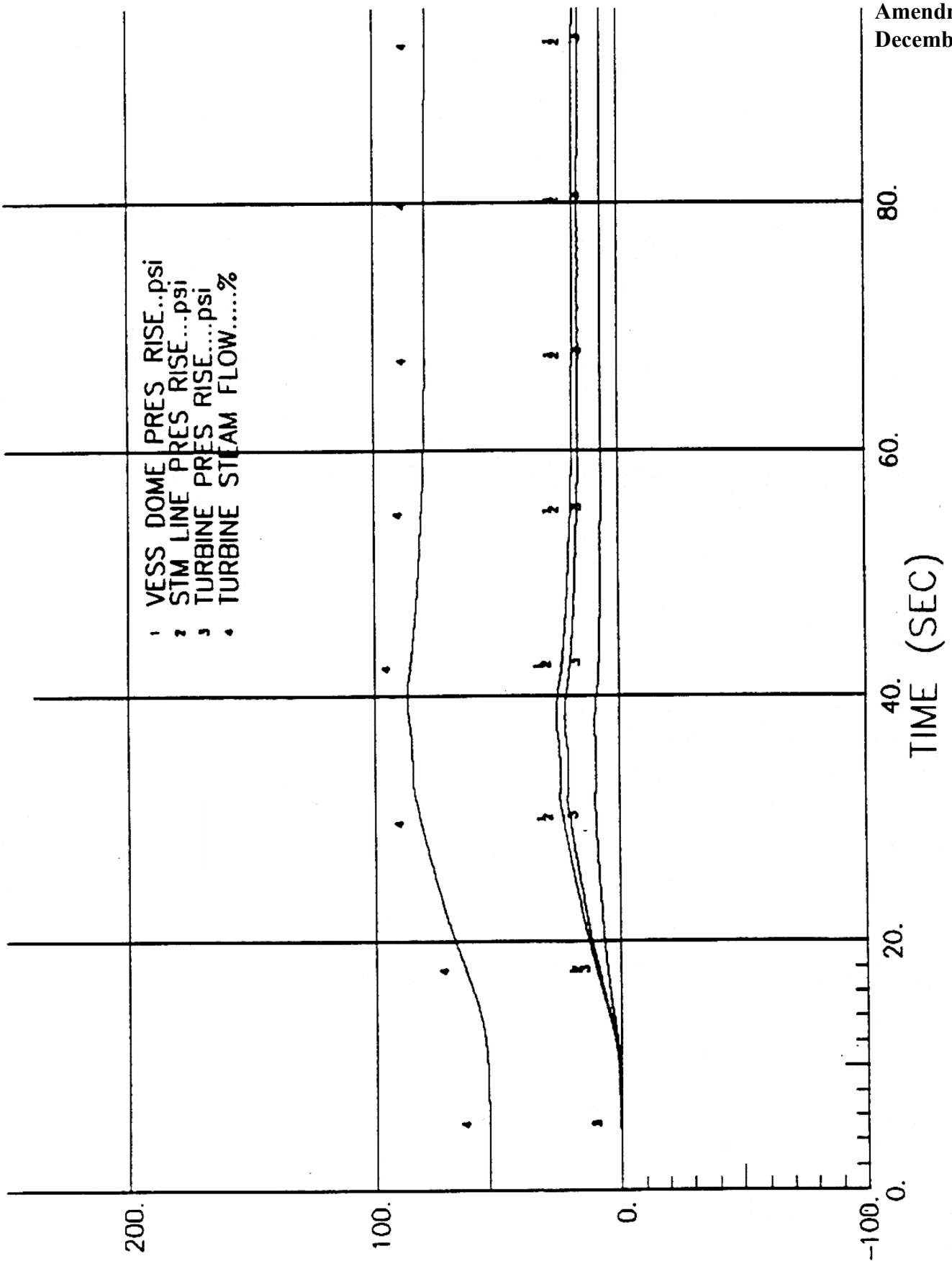

*% Uprated power (RTP) is based on 3544 MWt. Curves as shown are originally based on 3486 MWt.

Columbia Generating Station Final Safety Analysis Report	Abnormal Startup of an Idle Recirculation Loop at *56.95% Uprated Power, 34.1% Flow		
	Draw. No. 020002.04	Rev.	Figure 15.4-1.2

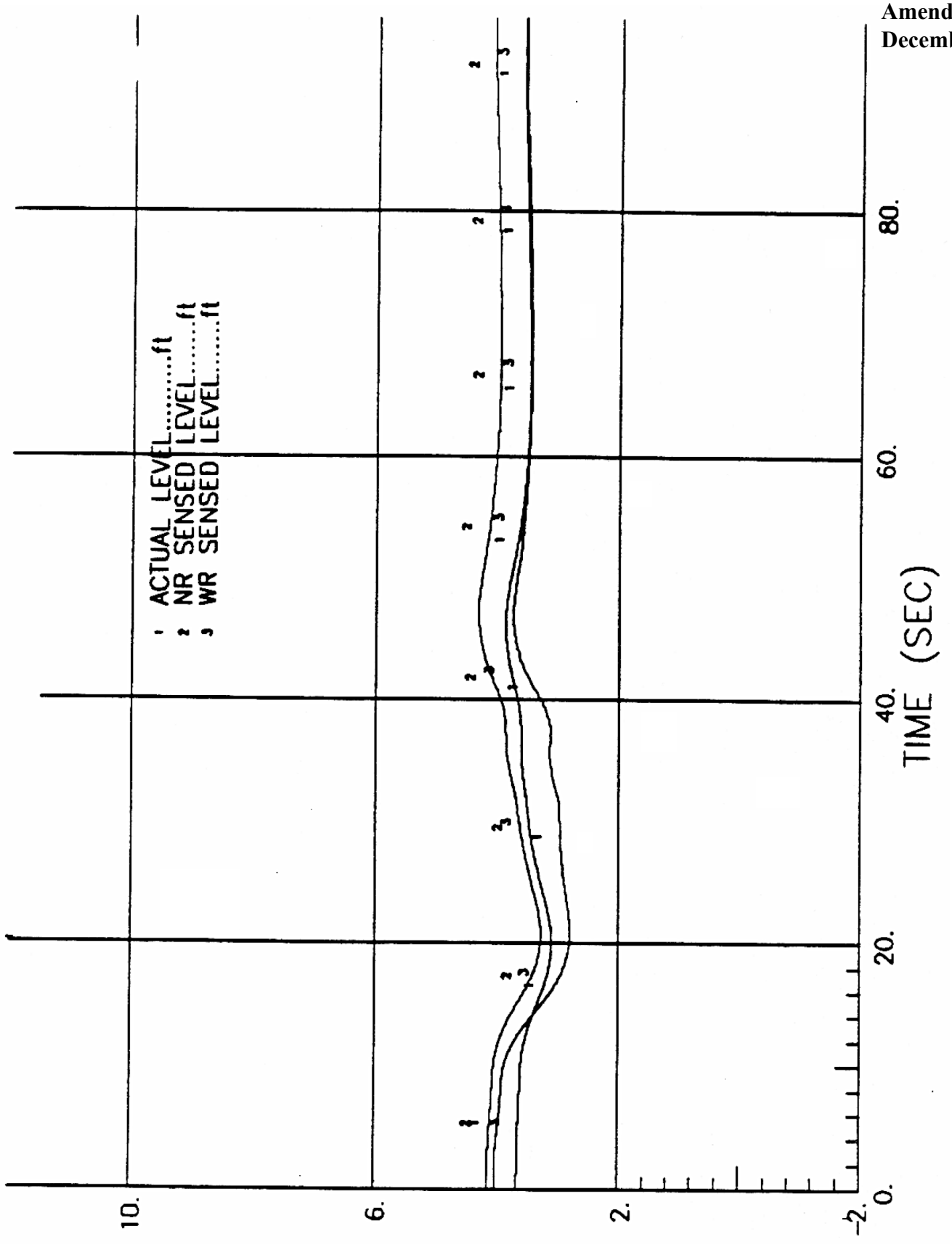

*% Uprated power (RTP) is based on 3544 MWt. Curves as shown are originally based on 3486 MWt.

Columbia Generating Station Final Safety Analysis Report	Abnormal Startup of an Idle Recirculation Loop at 56.95*% Uprated Power, 34.1% Flow		
	Draw. No. 020002.05	Rev.	Figure 15.4-1.3

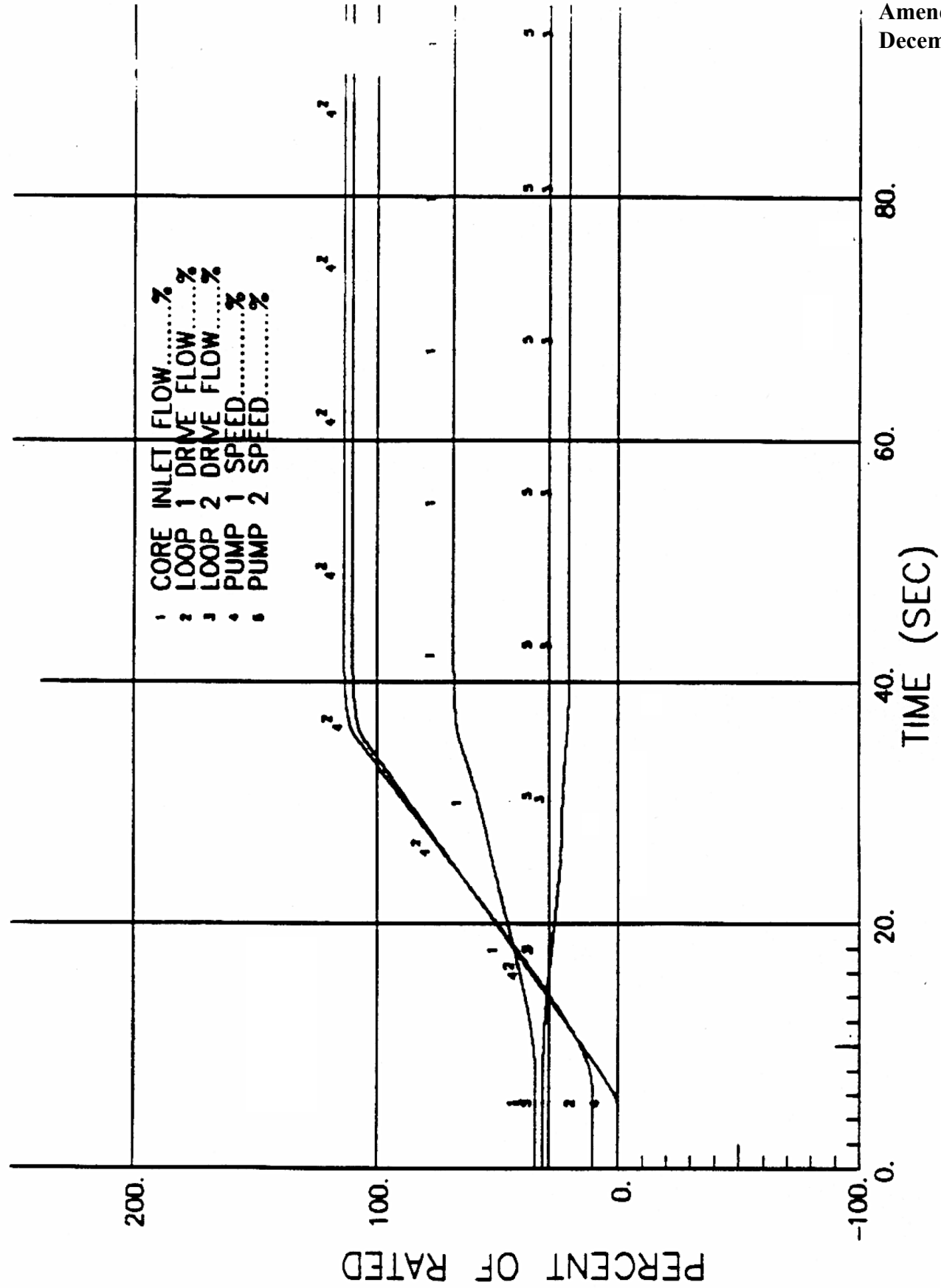

*% Uprated power (RTP) is based on 3544 MWt. Curves as shown are originally based on 3486 MWt.

Columbia Generating Station Final Safety Analysis Report	Abnormal Startup of an Idle Recirculation Loop at 56.95*% Uprated Power, 34.1% Flow		
	Draw. No. 020002.06	Rev.	Figure 15.4-1.4

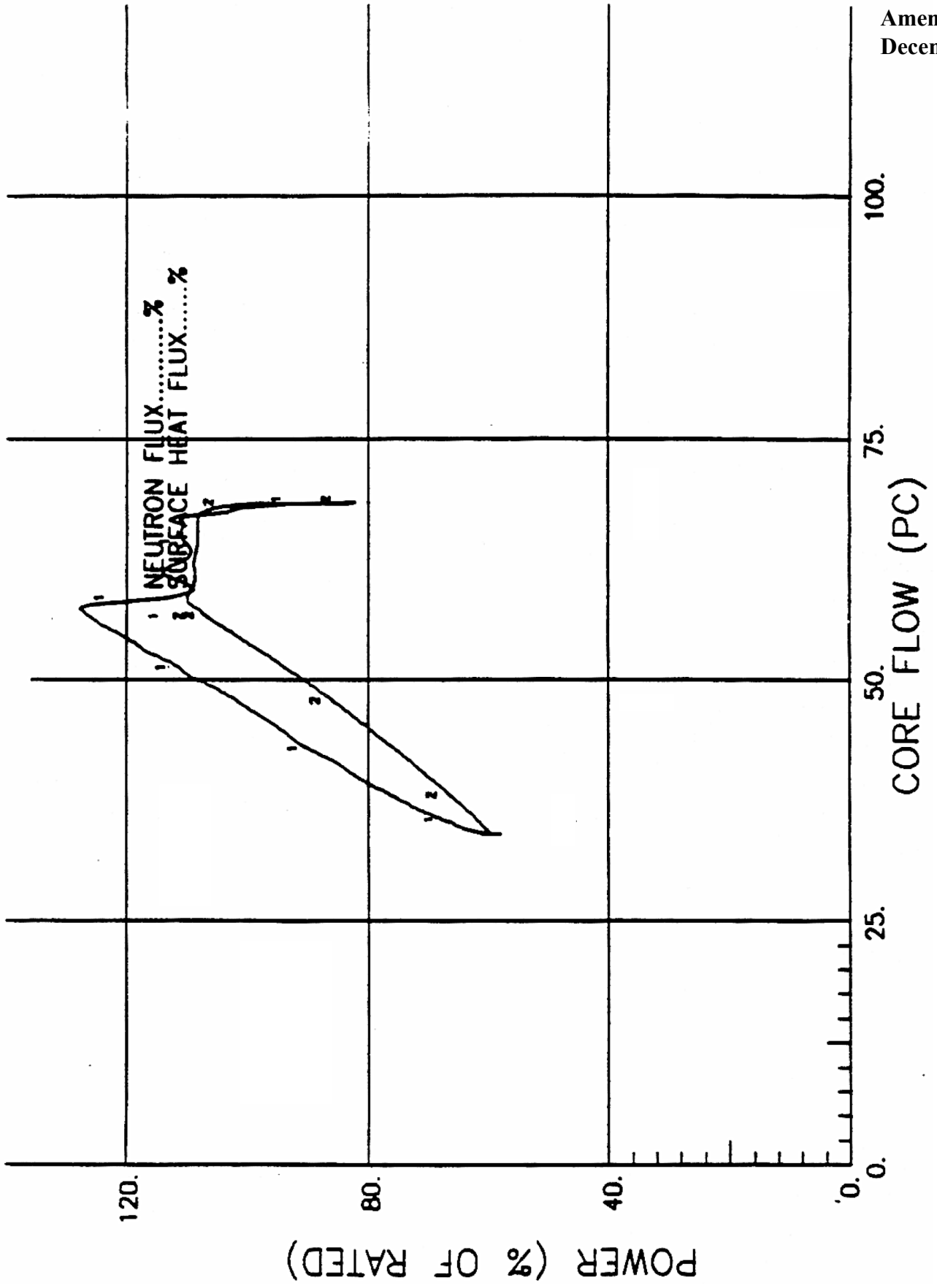

*% Uprated power (RTP) is based on 3544 MWt. Curves as shown are originally based on 3486 MWt.

Columbia Generating Station Final Safety Analysis Report	**Abnormal Startup of an Idle Recirculation Loop at 56.95*% Uprated Power, 34.1% Flow**		
	Draw. No. 020002.07	Rev.	Figure 15.4-1.5

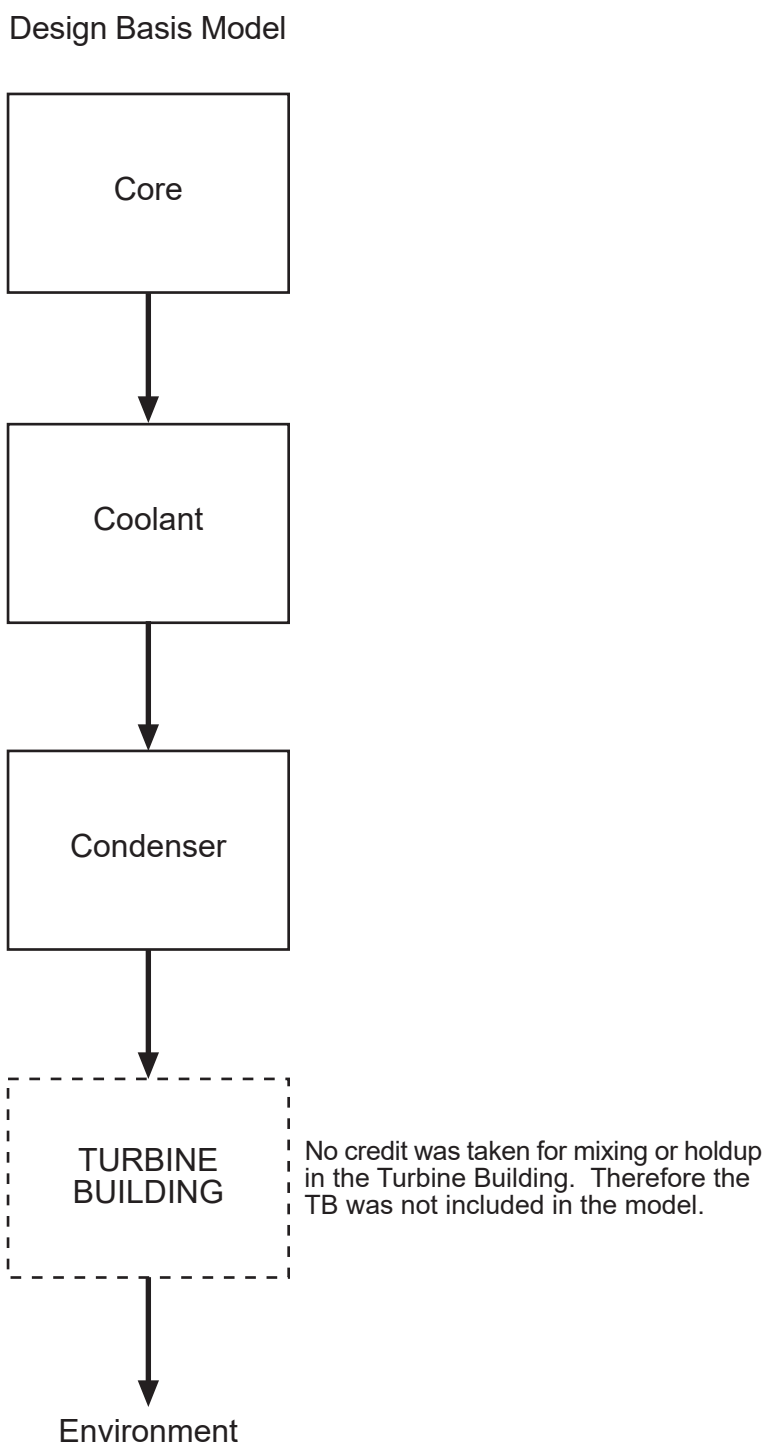

Columbia Generating Station
Final Safety Analysis Report

Leakage Path Model for Rod Drop Accident

Draw. No. 960222.71	Rev.	Figure 15.4-2

15.5 INCREASE IN REACTOR COOLANT INVENTORY

15.5.1 INADVERTENT HIGH-PRESSURE CORE SPRAY STARTUP

This transient is classified as a nonlimiting event for both original and uprated power conditions. The transient is not analyzed for each reload, but was analyzed for the GE14 New Fuel Introduction. Inadvertent startup of the high-pressure core spray (HPCS) system was analyzed because it provides the greatest auxiliary source of cold water into the vessel.

15.5.1.1 Identification of Causes and Frequency Classification

15.5.1.1.1 Identification of Causes

Manual startup (i.e., operator error) and continued injection of the HPCS system is postulated for this analysis.

15.5.1.1.2 Frequency Classification

This transient disturbance is categorized as an incident of moderate frequency.

15.5.1.2 Sequence of Events and Systems Operation

The HPCS system is manually initiated and injects into the reactor vessel, reaching full flow in approximately one second. The addition of the cooler water to the upper plenum causes a reduction in steam flow. This causes some reactor pressure decrease as the turbine control system responds to the event. As the steam flow decreases, the feedwater system responds by decreasing flow. In less than a minute, the reactor and the auxiliary steam systems stabilize at a new, lower power level. The analysis assumes normal functioning of plant instrumentation and controls. No engineered safety feature (ESF) function is expected in response to this transient. Plant parameter responses are shown in Figure 15.5-1.

15.5.1.2.1 The Effect of Single Failures and Operator Errors

Inadvertent operation of the HPCS system results in a mild depressurization. Level control and pressure regulator actuation are expected to establish a new stable operating state. The effect of a single failure in the DEH control system will have no effect on the transient because of its redundant design.

The effect of a single failure in the level control system has rather straightforward consequences including level rise or fall by improper control of the feedwater system. Increasing level will trip the turbine and automatically stop injection by the HPCS system. Decreasing level will automatically initiate a scram at the L3 level trip.

15.5.1.3 Core and System Performance

15.5.1.3.1 Mathematical Model

The one-dimensional ODYN transient analysis model described in Reference 15.5-1 was used to simulate this transient.

15.5.1.3.2 Input Parameter and Initial Conditions

The important parameters are shown in Table 15.5-1.

15.5.1.3.3 Results

The calculated uncorrected ΔCPR for the simulated bundles is less than 0.01 (Reference 15.5-2). A summary of transient key peak values is found in Table 15.0-1.

15.5.1.3.3.1 Consideration of Uncertainties. Important analytical factors including reactivity coefficient and feedwater temperature change have been assumed to be at the worst conditions so that any deviations in the actual plant parameters will produce a less severe transient.

15.5.1.4 Barrier Performance

Figure 15.5-1 indicates only a slight pressure reduction from initial conditions; therefore, reactor coolant pressure boundary pressure margins are not impacted.

15.5.1.5 Radiological Consequences

Since this event does not result in any fuel failures or any release of primary coolant to either the secondary containment or to the environment, there are no radiological consequences associated with this event.

15.5.2 CHEMICAL VOLUME CONTROL SYSTEM MALFUNCTION (OR OPERATOR ERROR)

This event is not applicable to boiling water reactor plants.

15.5.3 BOILING WATER REACTOR TRANSIENTS WHICH INCREASE REACTOR COOLANT INVENTORY

These events are discussed in Sections 15.1 and 15.2.

15.5.4 REFERENCES

15.5-1 "Qualification of the One-Dimensional Core Transient Model for Boiling Water Reactors," Volumes 1, 2, 3 and 4, NEDC-24154-P-A, February 2000.

15.5-2 GE Hitachi Nuclear Energy, "Inadvertent High Pressure Core Spray Startup Analysis," 0000-0098-5369-R0, March 2009.

Table 15.5-1

Input Parameters and Initial Conditions
HPCS Injection

Parameter	Value
Reactor power	100.34% (3556 MWth)
Core flow	106% ICF and 88% ELLLA
HPCS water source	Suppression pool
HPCS source pressure	14.7 psia
HPCS source temperature	40° F
HPCS source enthalpy	11.0 Btu/lbm
HPCS pump flow	12.6 % of rated feedwater flow (3800 gal/min)
Vessel-to-suppression pool differential pressure	1020 psid

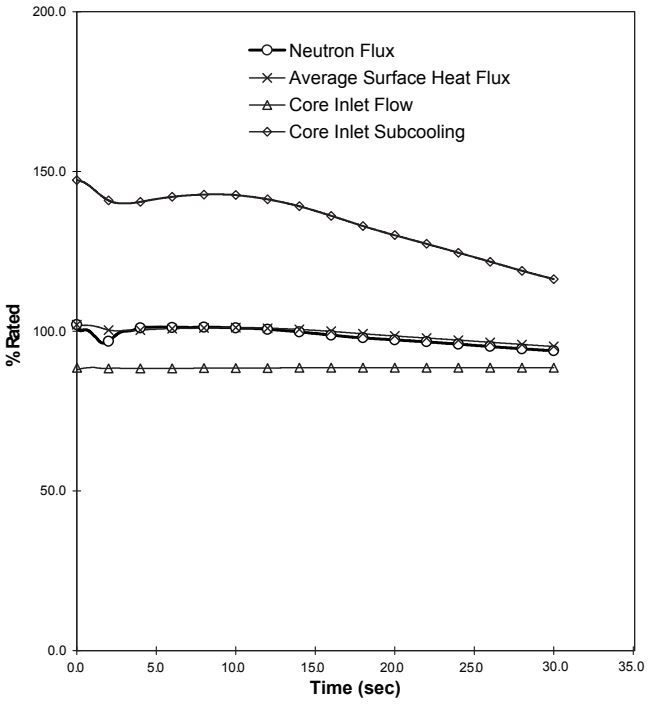

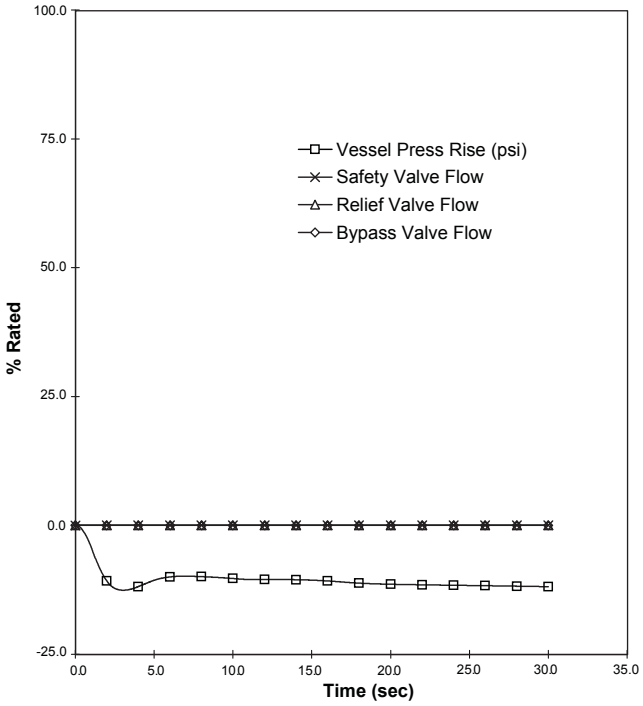

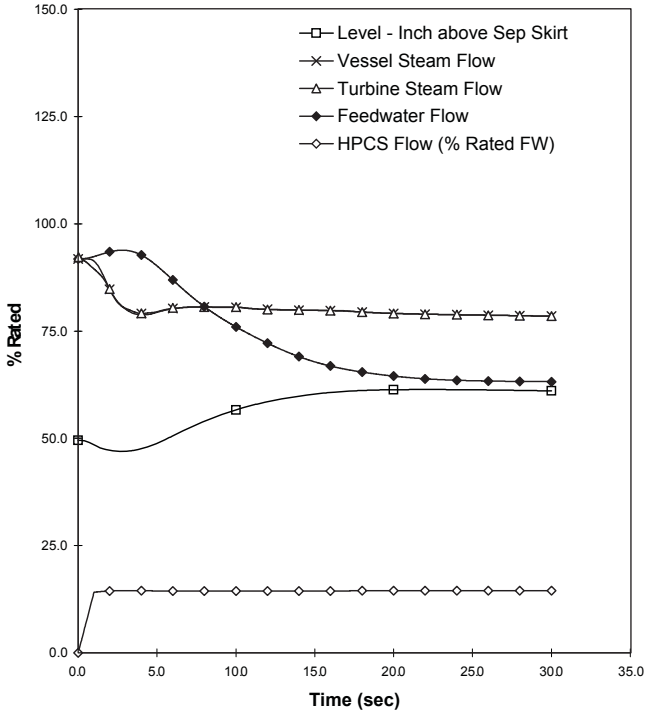

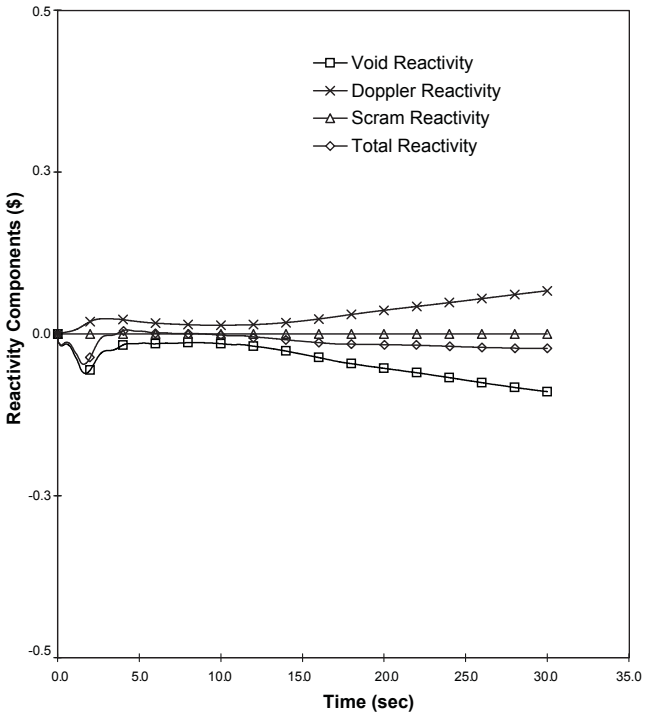

*% Uprated power (RTP) is based on 3544 MWt. Curves as shown are originally based on 3486 MWt.

Columbia Generating Station Final Safety Analysis Report	**Inadvertent Start of High Pressure Core Spray Pump at 100.34*% Uprated Power, 88% Flow**
	Draw. No. **020002.18** Rev. Figure **15.5-1**

15.6 DECREASE IN REACTOR COOLANT INVENTORY

15.6.1 INADVERTENT SAFETY/RELIEF VALVE OPENING

This event is discussed in Section 15.1.4.

15.6.2 INSTRUMENT LINE PIPE BREAK

This faulted condition is not a limiting event for either original or uprated power conditions. Therefore, the uprated power analysis for the accident has not been updated.

This event involves the postulated pipe break in a small steam or liquid line that is connected to the reactor coolant pressure boundary (RCPB) and is located in the reactor building. If the break were inside primary containment, the event would be bounded by the steam line break inside containment (LOCA) (see Section 15.6.5). That event is bounding because the instrument line sizes are bounded by the spectrum of breaks considered in the LOCA analysis.

15.6.2.1 Identification of Causes and Frequency Classification

15.6.2.1.1 Identification of Causes

There is no specific event or circumstance identified which results in the failure of an instrument line. These lines are designed to specific engineering specifications and standards, and seismic and environmental requirements. However, for the purpose of evaluating the consequences of this event, the failure of an instrument line is assumed to occur.

15.6.2.1.2 Frequency Classification

This event is categorized as a limiting fault.

15.6.2.2 Sequence of Events and Systems Operation

The instrument line ruptures (complete circumferential break) and releases reactor coolant into the secondary containment. The analysis assumes that the reactor coolant activity is at the Technical Specification limit corresponding to an iodine spike of 4μCi/g dose equivalent ^{131}I and that the break cannot be isolated. The operators have a variety of methods to detect the leak such as monitoring plant area temperatures and radiation levels, system pressures, or sump inventories, or during operator rounds. It is assumed that the reactor operators identify the break after 20 minutes and initiate a reactor scram.

Using available plant systems, the operators maintain reactor water level and cool down and depressurize the reactor within 5 hr, at a rate less than or equal to the 100°F/hr limit in the Technical Specifications. Examples of plant systems or components the operators can use for

inventory and temperature controls include HPCS, RCIC, SRVs, RHR, or the condensate feed system. No credit is taken for the automatic initiation of the RPS or ESF.

15.6.2.2.1 The Effect of Single Failures and Operator Errors

The event is handled by operator actions. Assuming additional single equipment failure or single operator error occurrences, adequate equipment would be available to respond to the loss of reactor coolant.

15.6.2.3 Core and System Performance

The inventory loss is within the capacity of the make up systems available and the shutdown and the cool down are controlled evolutions. Therefore, no fuel damage will occur and no other barriers are challenged.

15.6.2.3.1 Qualitative Summary - Results

Since instrument line breaks result in a slower rate of coolant loss and are bounded, the results are qualitative rather than quantitative. Since the rate of coolant loss is slow, an orderly reactor system depressurization follows reactor scram and the primary system is cooled down and maintained without ECCS actuation. No fuel damage or core uncovery occurs as a result of this event.

15.6.2.4 Barrier Performance

15.6.2.4.1 General

The release of primary coolant through the orificed instrument line would not result in an increase in secondary containment pressure.

15.6.2.5 Radiological Consequences

The radiological consequences are based on the following assumptions and methods:

a. The broken instrumentation line contains a 0.5-in. diameter flow restricting orifice inside the drywell.

b. Flow is critical at the orifice and is determined using the GOTHIC computer program (Reference 15.6-1) that employs the Henry model for subcooled liquid and the Moody model for saturated and superheated vapors (Reference 15.6-4).

c. The total integrated mass of fluid released by means of the break during the blowdown is 121,000 lb. Of this total, 29,800 lb flash to steam.

d. The specific models, assumptions and the program used for the radiological analysis is in Reference 15.6-3. Specific values of parameters used in the evaluation are presented in Table 15.6-1. The leakage path used in these calculations is shown in Figure 15.6-1.

e. The activity released from the instrument line break is based on the iodine spike concentration of 4μCi/g dose equivalent ^{131}I and is assumed to not mix or be held up within the secondary containment and is released to the environment at a flow rate of 80,000 cfm without SGT filtration.

f. The activity released to the secondary containment and the environment is presented in Table 15.6-2.

15.6.2.5.1 Results

The calculated exposures are presented in Table 15.6-3.

15.6.3 STEAM GENERATOR TUBE FAILURE

This event is not applicable to boiling water reactor (BWR) plants.

15.6.4 STEAM SYSTEM PIPING BREAK OUTSIDE CONTAINMENT

This event involves the postulation of a large steam line pipe break outside the primary containment. The analysis assumes that a main steam line instantaneously and circumferentially breaks at a location downstream of the outboard isolation valve. The plant is designed to immediately detect such an occurrence, initiate isolation of the broken line, and actuate the necessary protective features. The main steam line was selected for analysis because the postulated event envelops evaluation of steam line failures outside containment.

15.6.4.1 Identification of Causes and Frequency Classification

15.6.4.1.1 Identification of Causes

A main steam line break is postulated without the cause being identified. These lines are designed to specific engineering codes and standards, and seismic and environmental requirements. However, for the purpose of evaluating the consequences of a postulated large steam line rupture, the failure of a main steam line is assumed to occur.

15.6.4.1.2 Frequency Classification

This event is categorized as a limiting fault.

15.6.4.2 Sequence of Events and Systems Operation

15.6.4.2.1 Sequence of Events

When the steam line breaks, steam flow through the failed line will rapidly increase, initiating the high main steam line flow trip that initiates the signal to close the main steam isolation valves (MSIVs). The closing MSIVs initiate a reactor protection (RPS) signal, scramming the reactor. The analysis assumes that the MSIVs are fully closed 6 seconds after the break. Performance of the engineered safety feature (ESF) systems in response to the loss of coolant is discussed in Chapter 6.

The sequence of events and approximate time required to reach the event is given in Table 15.6-4.

15.6.4.2.2 Systems Operation

A postulated guillotine break of one of the four main steam lines outside the containment results in mass loss from both ends of the break. The flow from the upstream side is initially limited by the flow restrictor upstream of the inboard isolation valve. Flow from the downstream side is initially limited by the total area of the flow restrictors in the three unbroken lines. Initially, only steam will issue from the broken end of the steam line. The flow in each line is limited by critical flow at the limiter to a maximum of 200% of rated flow for each line. Rapid depressurization of the RPV causes the water level to rise resulting in a steam-water mixture flowing from the break until the valves are closed. Mass loss (steam and water) is reduced and finally terminated (except for leakage) as the MSIVs close.

15.6.4.2.3 The Effect of Single Failures and Operator Errors

The effect of single failures has been considered in analyzing this event. All of the protective sequences for this event are capable of single equipment failure or single operator error accommodation and yet still complete the necessary safety action.

15.6.4.3 Core and System Performance

The temperature and pressure transients resulting as a consequence of this accident are insufficient to cause fuel damage.

15.6.4.3.1 Input Parameters and Initial Conditions

See Section 6.3 for initial conditions.

15.6.4.3.2 Results

There is no fuel damage as a consequence of this accident.

See Section 6.3 for ECCS analysis.

15.6.4.3.3 Considerations of Uncertainties

Discussions of the uncertainties associated with the ECCS performance and the containment isolation systems are discussed in Sections 6.3 and 7.3, respectively.

15.6.4.4 Barrier Performance

Since this break occurs outside the primary containment, barrier performance within the containment envelope is not applicable. There are sufficient vent openings in the steam tunnel to ensure that the secondary containment structure will not be damaged.

15.6.4.5 Radiological Consequences

The radiological analysis is based on NRC Regulatory Guide 1.183 (Reference 15.6-5). The dispersion of the plume is based on the puff model given in Regulatory Guide 1.194 (Reference 15.6-6).

The specific models, assumptions, and the program used for computer evaluation are described in Reference 15.6-3. Specific values of parameters used in the evaluation are presented in Table 15.6-5. There is no fuel damage as a result of this accident. The only activity available for release from the break is that which is present in the reactor coolant and steam lines prior to the break. The iodine inventories and the subsequent exposures are based on the equilibrium conditions and maximum reactor coolant activity for an iodine spiking event as allowed by the Technical Specifications. The analysis assumes all the activity in this discharge becomes airborne and released directly and unfiltered to the environment. The release of activity to the environment is presented in Table 15.6-6.

The following assumptions and conditions are used in determining the mass loss from the primary system from the inception of the break to full closure of the MSIVs:

a. The reactor is operating at the power level associated with maximum mass release,

b. Nuclear system pressure is 1060 psia and remains constant during closure,

c. An instantaneous circumferential break of the main steam line occurs,

d. Isolation valves start to close at 0.5 sec on high flow signal and are fully closed at 6 sec,

e. The Moody critical flow model (Reference 15.6-4) is applicable, and

f. The flow limiters allow up to 200% of rated flow through the MSIVs, and

g. Level rise time is conservatively assumed to be one second. Mixture quality is conservatively taken to be a constant 7% (steam weight percentage) during mixture flow.

The total integrated mass leaving the RPV through the steam line break is 130,000 lb of which 105,000 lb is liquid and 25,000 lb is steam. Only the liquid portion of the discharged coolant is assumed to carry the iodine activity of 4 μCi/gm dose-equivalent of I-131. The entire amount of activity in the liquid is assumed to be released to the environment.

The transport pathway is a direct unfiltered release to the environment and an unfiltered entrance to the control room as presented in Figure 15.6-2.

15.6.4.5.1 Results

The calculated doses for the design basis analysis are presented in Table 15.6-7. The doses are within the limits of 10 CFR 50.67.

15.6.5 LOSS-OF-COOLANT ACCIDENTS (RESULTING FROM SPECTRUM OF POSTULATED PIPING BREAKS WITHIN THE REACTOR COOLANT PRESSURE BOUNDARY) - INSIDE CONTAINMENT

Accidents that could result in the release of radioactive fission products directly into the containment are the results of postulated breaks in the reactor coolant system pressure boundary (RCPB). The analysis postulates that the most severe pressurization transient to the primary containment is caused by a complete circumferential break of the suction line of one of the two recirculation loops. Flow through the break transports the reactor vessel contents to the suppression pool.

The loss-of-coolant accident (LOCA) postulates the break of any of the spectrum of piping systems that form the RCPB. The plant and operator responses to the spectrum of breaks are presented in Chapter 6. Chapter 6 demonstrates that fuel, core, and barrier performance requirements are met for the spectrum of breaks. The bounding radiological analysis for the LOCA event detailed in this section reflects an inadequate core cooling accident that degrades to complete core damage. The event assumed for the analysis is the break inside containment of one of the main steam lines. The radiological analysis assumptions presented in

Section 15.6.5 are separate and distinct and are not mechanistically tied to the pipe break analyzed in Chapter 6.

15.6.5.1 Identification of Causes and Frequency Classification

15.6.5.1.1 Identification of Causes

There are no realistic, identifiable events that would result in a pipe break inside the containment of the magnitude required to cause the fuel damage sufficient to release the source terms assumed in this section. The piping is designed to specific engineering codes and standards and for severe seismic and environmental conditions. However, since such an accident provides an upper limit estimate of the dose consequences for the limiting faulted condition, it is evaluated without the causes being identified.

15.6.5.1.2 Frequency Classification

This event is categorized as a limiting fault.

15.6.5.2 Sequence of Events and Systems Operation

The sequence of events and system operations are discussed in Chapter 6. The effect of single failures and operator errors is discussed in Chapter 6.

15.6.5.3 Core and System Performance

For the plant response to the LOCA and the evaluation of the system and core performance, see Chapter 6.

15.6.5.4 Radiological Consequences

The radiological consequences are based on the guidance provided in Regulatory Guide 1.183 (Reference 15.6-5) for the purpose of determining adequacy of the plant design to meet 10 CFR 50.67 limits.

A schematic of the transport pathway is shown in Figure 15.6-3.

15.6.5.4.1 Design Basis Analysis

The specific models, assumptions, and computer code used to evaluate the radiological consequences of the bounding LOCA based on the above criteria are presented in Reference 15.6-3. Specific values of parameters used in this evaluation are presented in Table 15.6-8.

15.6.5.4.1.1 Fission Product Release from Fuel. It is assumed that 100% of the noble gases and 30% of the iodine are released from an equilibrium core operating at a power level of 3556 MWt for 1000 days prior to the accident. Of this release, 100% of the noble gases become airborne. Some of the iodine is removed by plate-out and filtration; therefore, it is not available for airborne release to the environment. The activity airborne in the containment is presented in Table 15.6-9.

15.6.5.4.1.2 Fission Product Transport to the Environment. The fission product transport to the environment consists of two basic pathways. One transport pathway consists of leakage from the containment to the secondary containment by several different mechanisms and is discharged to the environment through the SGT system at an elevated location. Of the secondary containment flow, 50 cfm bypasses the SGT filters. The second transport pathway consists of leakage from the containment directly to the environment through piping systems that originate in containment and terminate outside the reactor building. The individual mechanisms for leakage from the primary containment are:

a. Containment leakage - Leakage from primary containment to the secondary containment. Prior to the completion of secondary containment drawdown this leakage is assumed to be a direct release to the environment; however, when drawdown is complete, 20 minutes post accident, this leakage is treated by the SGT system before it is released to the environment. No credit is taken for forced mixing and holdup within the secondary containment.

b. ESF leakage - Leakage from engineered safety feature (ESF) components outside the primary containment (all ESF equipment which circulates primary coolant or suppression pool water during the course of the postulated accident) to the secondary containment. This leakage is treated in a manner similar to the containment leakage described above.

c. Hydrogen purge - No hydrogen purge is required or assumed throughout the postaccident period.

d. MSIV leakage - Leakage from the primary containment (or the RPV) through the main steam isolation valves (MSIVs) to the turbine building. Iodine is assumed to plate-out in three of the four main steam lines. Plate-out in the broken fourth main steam line is not credited. In that line it is assumed one MSIV fails open (single failure), whereas all MSIVs in the other three steam lines are assumed to close.

e. Bypass leakage - Leakage from the primary containment that bypasses the secondary containment and is released, untreated, directly to the environment.

Fission product activities in secondary containment and those released to the environment based on the above assumptions are given in Tables 15.6-10 and 15.6-11, respectively.

15.6.5.4.1.3 Suppression Pool pH Control. The suppression pool pH is maintained above 7.0 for the duration of the accident as a result of the standby liquid control system injection of sodium pentaborate solution. The solution is assumed to be injected and fully mixed with the suppression pool water within 8 hours post-LOCA.

15.6.5.4.1.4 Results. The calculated doses for the design basis analysis are presented in Table 15.6-12 and are within the limits of 10 CFR 50.67.

15.6.6 FEEDWATER LINE BREAK - OUTSIDE CONTAINMENT

In order to evaluate large liquid process line pipe breaks outside containment, the failure of a feedwater line is assumed to evaluate the response of the plant design to this postulated event. The postulated break of the feedwater line, representing the largest liquid line outside the containment, provides the envelope evaluation relative to this type of occurrence. The break is assumed to be instantaneous, circumferential, and outboard of the outermost isolation valve. The analysis has not been updated for the change in MSIV isolation setpoint from Level 2 to Level 1 because the analysis remains bounded by the recirculation line break LOCA (Reference 15.6-9).

15.6.6.1 Identification of Causes and Frequency Classification

15.6.6.1.1 Identification of Causes

A feedwater line break is assumed without the cause being identified. The subject piping is designed to specific engineering codes and standards.

15.6.6.1.2 Frequency Classification

This event is categorized as a limiting fault.

15.6.6.2 Sequence of Events and Systems Operation

15.6.6.2.1 Sequence of Events

The sequence of events is shown in Table 15.6-13.

15.6.6.2.2 Systems Operation

It is assumed that the normally operating plant instrument and controls are functioning. Credit is taken for the actuation of the reactor isolation system and ECCS. The RPS (SRVs, ECCS,

and control rod drives) and plant protection system (RHR heat exchanger) are assumed to function. The ESF system is assumed to operate normally. Although not an ECCS and not credited nor required for mitigation of this event, RCIC will also be used if available for maintaining vessel level as it initiates at approximately the same low reactor vessel level as HPCS.

15.6.6.2.3 The Effect of Single Failures and Operator Errors

The feedwater line outside the containment is a special case of the general LOCA break spectrum considered in Section 6.3. The general single-failure analysis for LOCAs is discussed in Section 6.3.3.3. For the feedwater line break outside the containment, since the break is isolable, the HPCS can provide adequate flow to the vessel to maintain core cooling and prevent fuel rod cladding failure. A single failure of the HPCS would require actuation of ADS and the low-pressure core cooling systems to keep the core covered with water.

15.6.6.3 Core and System Performance

15.6.6.3.1 Qualitative Summary

The accident evaluation qualitatively considered in this section is considered to be conservative and to envelope assessment of the consequences of the postulated failure of one of the feedwater piping lines external to the containment. The accident is postulated to occur at the input parameters and initial conditions given in Table 6.3-2a, 6.3-2b, and 6.3-2c.

15.6.6.3.2 Qualitative Results

The feedwater line break outside the containment is less limiting than the steam line break outside the containment or the LOCA inside the containment.

The reactor vessel is isolated on low-low water level and the HPCS would restore the reactor water level to the normal elevation. The fuel is covered throughout the event and there are no pressure or temperature transients sufficient to cause fuel damage.

15.6.6.3.3 Consideration of Uncertainties

This event was conservatively analyzed and uncertainties were adequately considered (see Section 6.3 for details).

15.6.6.4 Barrier Performance

A break spectrum analysis for the complete range of reactor conditions indicates that the limiting fault event for breaks outside the containment is a complete severance of one of the

main steam lines. The feedwater system piping break is less severe than the main steam line break.

15.6.6.5 Radiological Consequences

The specific models, assumptions, and the program used for computer evaluation are described in Reference 15.6-2. Specific values of parameters used in the evaluation are presented in Table 15.6-14. A diagram of the leakage path for this accident is shown in Figure 15.6-4.

15.6.6.5.1 Fission Product Release

Fission product release is assumed to occur from two pathways: activity being pumped from the condenser hotwell and activity returning to the feedwater system from the reactor water cleanup (RWCU) system. The activity in both of these sources is based on the Technical Specification coolant limit.

Noble gas activity in the condensate is negligible since the air ejectors remove most of the noble gas from the condenser.

15.6.6.5.2 Fission Product Transport to the Environment

The transport pathway consists of liquid release from the break, carryover to the turbine building atmosphere due to flashing and partitioning and unfiltered release to the environment through the turbine building ventilation system.

Of the 860,000 lb of condensate released from the break, 86,000 lb flashes to steam with assumed iodine carryover of 100%. Of the activity remaining in the unflashed liquid, 5% is assumed to become airborne. Normally, all feedwater reaching the break location will have passed through condensate demineralizers which have a 90% iodine removal efficiency. However, as a result of the increased feedwater flow caused by the break, differential pressure across the demineralizers is assumed to initiate flow through the demineralizer bypass line. This bypass line then carries 15% of the total flow resulting in an effective iodine removal efficiency for all flow of 76.5%. In addition, it is also assumed that 2771 lb of liquid returning from the RWCU are released prior to isolation of the RWCU. The activity concentration in this return steam is 1% of the RPV coolant concentration.

Taking no credit for holdup, decay, or plate-out during transport through the turbine building, the release of activity to the environment is presented in Table 15.6-15. The release is assumed to take place within 2 hr of the occurrence of the break.

15.6.6.5.3 Results

The calculated exposures for the realistic analysis are presented in Table 15.6-16 and are a small fraction of 10 CFR 100 guidelines.

15.6.7 REFERENCES

15.6-1 GOTHIC Containment Analysis Package, Technical Manual, Version 4.0, Numerical Applications, Inc., NA18907-06, Revision 3.

15.6-2 Nguyen, D., "Realistic Accident Analysis for General Electric Boiling Water Reactor - The RELAC Code and User's Guide," (NEDO-21142).

15.6-3 Energy Northwest, "Columbia Generating Station Alternative Source Term," CGS-FTS-0168, Revision 2, June 2011.

15.6-4 Moody, F. J, "Maximum Two-Phase Vessel Blowdown from Pipes," ASME Paper Number 65-WA/HT-1, March 15, 1965.

15.6-5 Regulatory Guide 1.183, Revision 0, "Alternative Radiological Source Terms for Evaluating Design Basis Accidents at Nuclear Power Reactors," July, 2000.

15.6-6 Regulatory Guide 1.194, Revision 0, "Atmospheric Relative Concentrations for Control Room Radiological Habitability Assessments at Nuclear Power Plants," July, 2003.

15.6-7 Federal Guidance Report 11, "Limiting Values of Radionuclide Intake and Air Concentration and Dose Conversion Factors for Inhalation, Submersion and Ingestion," Oak Ridge National Laboratory, 1988.

15.6-8 Federal Guidance Report 12, "External Exposure to Radionuclides in Air, Water and Soil," Oak Ridge National Laboratory, 1993.

15.6-9 GE Hitachi Nuclear Energy, "License Amendment Request for Proposed Changes to Columbia Technical Specifications: Changing Group 1 Isolation Valves' Low Reactor Water Level Isolation Signal from the Current Level 2 to Level 1," 0000-0081-6730-R1, July 2008.

Table 15.6-1

Instrument Line Break Accident - Parameters
Tabulated for Postulated Accident Analyses

	Parameters	Design Basis Assumptions
I.	Data and assumptions used to estimate radioactive source from postulated accidents	
	A. Power level	N/A
	B. Burnup	N/A
	C. Fuel damaged	None
	D. Airborne activity by nuclide	Table 15.6-2
	E. Iodine fractions	
	(1) Organic	0.15%
	(2) Elemental	4.85%
	(3) Particulate	95%
	F. Initial reactor coolant activity with iodine spike	4 µci/g
	^{131}I	1.6 µci/g
	^{132}I	14.8 µci/g
	^{133}I	11.0 µci/g
	^{134}I	30.0 µci/g
	^{135}I	16.0 µci/g
II.	Data and assumptions used to estimate activity released	
	A. Primary containment leak rate (%/day)	N/A
	B. Secondary containment effluent rate (cfm)	80,000[a]
	C. Valve movement times	N/A
	D. Adsorption and filtration efficiencies	
	(1) Organic iodine	N/A
	(2) Elemental iodine	N/A
	(3) Particulate iodine	N/A
	(4) Particulate fission products	N/A
	E. Recirculation system parameters	
	(1) Flow rate	N/A
	(2) Mixing efficiency	N/A
	(3) Filter efficiency	N/A
	F. Containment spray parameters (flow rate, drop size, etc.)	N/A
	G. Containment volumes	N/A
	H. All other pertinent data and assumptions	None

Table 15.6-1

Instrument Line Break Accident - Parameters
Tabulated for Postulated Accident Analyses (Continued)

	Parameters	Design Basis Assumptions
III.	Dispersion data	
A.	Offsite	See Table 15.0-4
B.	Control Room	See Table 15.0-5
IV.	Dose data	
A.	Method of dose calculation	Reference 15.6-5
B.	Dose conversion assumptions	Reference 15.6-7
C.	Peak activity released from secondary containment	Table 15.6-2
D.	Doses	Table 15.6-3

[a] No forced mixing in secondary containment is considered.

Table 15.6-2

Instrument Line Failure

Activity Airborne in Secondary Containment (Ci)					
	2 hr	5 hr	8 hr	1 day	30 days
^{133}Xe	7.02E-07	2.60E-07	0.00E+00	0.00E+00	0.00E+00
^{135}Xe	1.22E-05	3.67E-06	0.00E+00	0.00E+00	0.00E+00
Total	1.29E-05	3.93E-06	0.00E+00	0.00E+00	0.00E+00
^{131}I	2.00E-02	8.09E-03	0.00E+00	0.00E+00	0.00E+00
^{132}I	1.03E-01	1.72E-02	0.00E+00	0.00E+00	0.00E+00
^{133}I	1.29E-01	4.80E-02	0.00E+00	0.00E+00	0.00E+00
^{134}I	7.60E-02	2.80E-03	0.00E+00	0.00E+00	0.00E+00
^{135}I	1.64E-01	4.93E-02	0.00E+00	0.00E+00	0.00E+00
Total	4.92E-01	1.25E-01	0.00E+00	0.00E+00	0.00E+00

Activity Airborne in the Environment (Ci)					
	2 hr	5 hr	8 hr	1 day	30 days
^{133}Xe	1.90E-03	3.93E-03	4.91E-03	6.06E-03	6.08E-03
^{135}Xe	3.56E-02	6.76E-02	8.02E-02	9.06E-02	9.06E-02
Total	3.75E-02	7.15E-02	8.51E-02	9.67E-02	9.67E-02
^{131}I	4.87E+01	8.46E+01	8.72E+01	8.72E+01	8.72E+01
^{132}I	3.51E+02	4.81E+02	4.86E+02	4.86E+02	4.86E+02
^{133}I	3.26E+02	5.51E+02	5.65E+02	5.65E+02	5.65E+02
^{134}I	4.91E+02	5.52E+02	5.53E+02	5.53E+02	5.53E+02
^{135}I	4.46E+02	7.06E+02	7.22E+02	7.22E+02	7.22E+02
Total	1.66E+03	2.37E+03	2.41E+03	2.41E+03	2.41E+03

Table 15.6-3

Instrument Line Failure
Radiological Effects

Area	Total Effective Dose Equivalent (rem)	Limit (rem TEDE)
Control Room	1.58	5
Exclusion area (1950 m) (2 hr)	0.36	2.5
Low population zone (4827 m) (30 days)	0.16	2.5

Table 15.6-4

Sequence of Events for Steam Line Break
Outside Containment

Time	Event
0	Guillotine break of one main steam line outside primary containment.
0.5[a]	High steam line flow signal initiates closure of MSIV.
<1.0	Reactor begins to scram.
≥ 6.0	Main steam line isolation valves fully closed.
10	Safety/relief valves open on high vessel pressure. The valves open and close to maintain vessel pressure at approximately 1100 psi.
600	Operator initiates ADS or manually controls relief valves. Vessel depressurizes rapidly.
750	High-pressure core spray initiates on low water level.
1270	Core effectively reflooded. No fuel rod failure.

[a] Approximately.

Table 15.6-5

Steam Line Break Accident - Parameters
Tabulated for Postulated Accident Analyses

	Parameters	Design Basis Assumptions
I.	Data and assumptions used to estimate radioactive source from postulated accidents.	
	A. Power level	N/A
	B. Burnup	N/A
	C. Fuel damaged	None
	D. Release of activity by nuclide	Table 15.6-6
	E. Iodine fractions[1]	
	(1) Organic	N/A
	(2) Elemental	N/A
	(3) Particulate	N/A
	F. Reactor coolant activity before the accident corresponds to the iodine spike of 4 µci/gm dose-equivalent I-131	4 µci/gm
II.	Data and assumptions used to estimate activity released.	
	A. Primary containment leak rate (%/day)	N/A
	B. Secondary containment leak rate (%/day)	N/A
	C. Isolation valve closure time (sec)	6
	D. Adsorption and filtration efficiencies	
	(1) Organic iodine[1]	N/A
	(2) Elemental iodine	N/A
	(3) Particulate iodine	N/A
	(4) Particulate fission products	N/A

[1] Since no filtration is credited, speciation of iodines is not applicable.

Table 15.6-5

Steam Line Break Accident - Parameters
Tabulated for Postulated Accident Analyses (Continued)

Parameters			Design Basis Assumptions
	E.	Recirculation system parameters	N/A
		(1) Flow rate	N/A
		(2) Mixing efficiency	N/A
		(3) Filter efficiency	N/A
	F.	Containment spray parameters (flow rate, drop size, etc.)	N/A
	G.	Containment volumes	N/A
	H.	All other pertinent data and assumptions	None
III.	Dispersion data		
		(1) Offsite	Table 15.0-4
		(2) Control Room	8.19 E-4 sec/m^3
IV.	Dose data		
	A.	Method of dose calculation	Reference 15.6-3
	B.	Dose conversion assumptions	Reference 15.6-7
	C.	Peak activity concentrations in containment	N/A
	D.	Doses	Table 15.6-7

Table 15.6-6

Steam Line Break Accident
Activity Release to Environment (Curies)

Isotope	Activity Released
^{131}I	1.91E 02

Table 15.6-7

Steam Line Break Accident
Radiological Effects of a Puff Release

Area	TEDE (rem)
Exclusion area (1950 m)	0.40
Low population zone (4827 m)	0.11
Control Room	1.8

Table 15.6-8

Loss-of-Coolant Accident - Parameters
Tabulated for Postulated Accident Analysis

	Parameters	Design Basis Assumptions	
I.	Data and assumptions used to estimate radioactive source from postulated accidents		
	A. Power level	3556	
	B. Burnup	N/A	
	C. Fuel damaged	100%	
	D. Airborne activity by nuclide	Table 15.6-10 and 15.6-11	
	E. Iodine fractions		
	(1) Organic	0.0015	
	(2) Elemental	0.0485	
	(3) Particulate	0.95	
	F. Reactor coolant activity before the accident	N/A	
II.	Data and assumptions used to estimate activity released		
	A. Primary containment leak rate includes MSIV leakage (% volume/day)	0 – 24 hrs 24 – 720 hrs	0.5 0.25
	B. Secondary containment leak rate (%/day)	N/A	
	C. Drawdown period (minutes)	20	
	D. Adsorption and filtration efficiencies (%)		
	(1) Organic iodine	98%	
	(2) Elemental iodine	98%	
	(3) Particulate iodine	98%	
	(4) Particulate fission products	98%	

Table 15.6-8

Loss-of-Coolant Accident - Parameters
Tabulated for Postulated Accident Analysis (Continued)

	Parameters	Design Basis Assumptions	
E.	Secondary containment volumetric flow rate bypassing SGT filters[1], cfm	50	
F.	Secondary containment bypass leakage	0 – 24 hrs 24 – 720 hrs	0.04% volume per day 0.02% volume per day
G.	Recirculation system parameters		
(1)	Flow rate (cfm)	N/A	
(2)	Mixing efficiency	N/A	
(3)	Filter efficiency	N/A	
H.	Containment spray removal rates	Time (hr) 0 0.25 2.44 24.0	Removal Rate (1/hr) 0.0 6.20 0.62 0.0
I.	Containment volumes	Table 6.2-1	
J.	MSIV leak rate per steam line	0 – 24 hrs 24 – 720 hrs	16 scfh 8 scfh
K.	ESF leakage into secondary containment	2 gpm	
L.	CREF bypass leakage	50 cfm	
III.	Dispersion data		
(1)	Offsite	Table 15.0-4	
(2)	Control room	Table 15.0-5	

[1] SGT filter bypass will reduce SGT filter efficiency from 99% to 98%.

Table 15.6-8

Loss-of-Coolant Accident - Parameters
Tabulated for Postulated Accident Analysis (Continued)

	Parameters		Design Basis Assumptions
IV.	Dose data		
	A.	Method of dose calculation	Reference 15.6-5
	B.	Dose conversion assumptions	Reference 15.6-7, 15.6-8
	C.	Peak activity concentrations in containment	Table 15.6-9
	D.	Doses	Table 15.6-12

Table 15.6-9

Loss-of-Coolant Accident
Primary Containment[1] Activity (Curies)

Isotope	0.25 hr	0.5 hr	0.8 hr	1.0 hr	2.0 hr	4.0 hr	8.0 hr	24.0 hr	30 day
^{131}I	2.15E+06	1.72E+06	2.42E+06	2.63E+06	2.69E+06	3.93E+05	1.25E+05	4.09E+04	3.03E+03
^{132}I	2.82E+06	2.10E+06	2.75E+06	2.79E+06	2.15E+06	2.17E+05	3.57E+04	1.12E+02	1.03E-01
^{133}I	4.16E+06	3.30E+06	4.62E+06	4.97E+06	4.95E+06	6.82E+05	1.92E+05	3.92E+04	3.25E-06
^{134}I	3.81E+06	2.49E+06	2.87E+06	2.55E+06	1.18E+06	3.47E+04	4.52E+02	4.13E-04	0
^{135}I	3.78E+06	2.94E+06	4.05E+06	4.29E+06	3.97E+06	4.77E+05	1.02E+05	6.80E+03	0
Total iodines	1.67E+07	1.26E+07	1.67E+07	1.72E+07	1.49E+07	1.80E+06	4.55E+05	8.71E+04	3.03E+03
^{83m}Kr	2.51E+05	4.92E+05	1.80E+06	3.02E+06	5.87E+06	2.84E+06	6.34E+05	1.58E+03	0
^{85m}Kr	5.45E+05	1.13E+06	4.35E+06	7.71E+06	1.86E+07	1.39E+07	7.36E+06	5.84E+05	0
^{85}Kr	3.17E+04	6.82E+04	2.74E+05	5.05E+05	1.43E+06	1.46E+06	1.46E+06	1.45E+06	1.29E+06
^{87}Kr	9.02E+05	1.69E+06	5.92E+06	9.53E+06	1.56E+07	5.33E+06	5.97E+05	9.35E+01	0
^{88}Kr	1.38E+06	2.79E+06	1.05E+07	1.82E+07	4.03E+07	2.51E+07	9.29E+06	1.76E+05	0
^{89}Kr	6.47E+04	5.31E+03	8.12E+02	5.71E+01	3.42E-04	1.60E-15	3.36E-38	5.95E-129	0
^{131m}Xe	2.15E+04	4.63E+04	1.86E+05	3.42E+05	9.66E+05	9.81E+05	9.71E+05	9.30E+05	1.56E+05
^{133m}Xe	1.28E+05	2.74E+05	1.10E+06	2.01E+06	5.63E+06	5.60E+06	5.33E+06	4.33E+06	6.17E+02
^{133}Xe	4.19E+06	9.00E+06	3.61E+07	6.64E+07	1.87E+08	1.89E+08	1.86E+08	1.72E+08	3.52E+06
^{135m}Xe	4.40E+05	4.87E+05	1.00E+06	9.51E+05	1.88E+05	9.29E+02	2.18E-02	0	0
^{135}Xe	1.02E+06	2.23E+06	8.57E+06	1.56E+07	4.20E+07	4.21E+07	3.82E+07	1.79E+07	0
^{137}Xe	2.50E+05	3.75E+04	1.05E+04	1.35E+03	8.99E-02	5.09E-11	1.59E-29	1.52E-103	0
^{138}Xe	1.50E+06	1.75E+06	3.81E+06	3.82E+06	9.34E+05	7.13E+03	3.98E-01	3.87E-18	0
Total noble gases	1.07E+07	2.00E+07	7.36E+07	1.28E+08	3.19E+08	2.86E+08	2.50E+08	1.97E+08	4.97E+06
Alkali metals	9.84E+05	7.85E+05	9.21E+05	9.62E+05	9.72E+05	1.29E+05	3.05E+04	9.57E+01	7.73E+01
Te-group	2.83E+05	2.31E+05	2.04E+06	2.49E+06	2.41E+06	3.09E+05	6.56E+04	1.72E+02	5.34E+01
Noble metals	0.00E+00	0.00E+00	1.55E+05	1.97E+05	1.99E+05	2.57E+04	5.82E+03	1.60E+01	3.99E+00
La-group	0.00E+00	0.00E+00	2.40E+04	3.19E+04	3.17E+04	9.64E+03	3.11E+03	1.33E+01	1.00E+01
Ce-group	0.00E+00	0.00E+00	1.15E+05	1.46E+05	1.52E+05	1.98E+04	4.49E+03	1.18E+01	1.05E+00

[1]Primary Containment includes the Dry Well & the Wet Well Air-Space

Table 15.6-10

Loss-of-Coolant Accident
Secondary Containment Activity (Curies) - 20 Minute Drawdown

Isotope	0.25 hr	0.5 hr	0.75 hr	1 hr	2 hr	4 hr	8 hr	24 hr	30 day
^{131}I	0	6.89E+00	9.90E+00	1.15E+01	1.50E+01	7.11E+00	6.08E+00	5.47E+00	4.11E-01
^{132}I	0	8.38E+00	1.13E+01	1.22E+01	1.19E+01	3.26E+00	8.84E-01	6.86E-03	1.79E-07
^{133}I	0	1.32E+01	1.89E+01	2.17E+01	2.75E+01	1.23E+01	9.36E+00	5.24E+00	0
^{134}I	0	9.98E+00	1.18E+01	1.12E+01	6.54E+00	6.29E-01	2.20E-02	5.53E-08	0
^{135}I	0	1.18E+01	1.65E+01	1.88E+01	2.21E+01	8.61E+00	4.95E+00	9.08E-01	0
Total iodines	0	5.02E+01	6.84E+01	7.54E+01	8.29E+01	3.19E+01	2.13E+01	1.16E+01	4.11E-01
^{83m}Kr	0	1.65E+00	5.88E+00	1.02E+01	2.02E+01	9.84E+00	2.20E+00	5.47E-03	0
^{85m}Kr	0	3.77E+00	1.42E+01	2.59E+01	6.40E+01	4.81E+01	2.55E+01	2.03E+00	0
^{85}Kr	0	2.28E-01	8.97E-01	1.70E+00	4.91E+00	5.06E+00	5.06E+00	5.03E+00	2.24E+00
^{87}Kr	0	5.66E+00	1.94E+01	3.21E+01	5.36E+01	1.85E+01	2.07E+00	3.25E-04	0
^{88}Kr	0	9.33E+00	3.44E+01	6.13E+01	1.38E+02	8.69E+01	3.22E+01	6.10E-01	0
^{89}Kr	0	1.78E-02	2.66E-03	1.92E-04	1.17E-09	5.56E-21	1.17E-43	0	0
^{131m}Xe	0	1.55E-01	6.08E-01	1.15E+00	3.32E+00	3.40E+00	3.37E+00	3.22E+00	2.70E-01
^{133m}Xe	0	9.17E-01	3.59E+00	6.78E+00	1.93E+01	1.94E+01	1.85E+01	1.50E+01	1.07E-03
^{133}Xe	0	3.01E+01	1.18E+02	2.24E+02	6.43E+02	6.59E+02	6.49E+02	6.06E+02	6.47E+00
^{135m}Xe	0	1.63E+00	3.29E+00	3.20E+00	6.44E-01	3.22E-03	7.58E-08	0	0
^{135}Xe	0	7.70E+00	2.87E+01	5.35E+01	1.50E+02	1.61E+02	1.57E+02	8.24E+01	0
^{137}Xe	0	1.25E-01	3.43E-02	4.53E-03	3.09E-07	1.77E-16	5.52E-35	0	0
^{138}Xe	0	5.87E+00	1.25E+01	1.28E+01	3.21E+00	2.47E-02	1.38E-06	0	0
Total noble gases	0	6.72E+01	2.42E+02	4.33E+02	1.10E+03	1.01E+03	8.95E+02	7.14E+02	8.98E+00
Alkali metals	0	2.75E+00	3.18E+00	3.33E+00	3.38E+00	4.51E-01	1.07E-01	3.34E-04	1.34E-04
Te-group	0	8.69E-01	6.92E+00	8.69E+00	8.45E+00	1.08E+00	2.29E-01	5.99E-04	9.28E-05
Noble metals	0	0.00E+00	5.18E-01	6.76E-01	6.92E-01	8.96E-02	2.03E-02	5.60E-05	6.92E-06
La-group	0	0.00E+00	8.11E-02	1.12E-01	1.12E-01	3.36E-02	1.09E-02	4.65E-05	1.74E-05
Ce-group	0	0.00E+00	3.82E-01	5.04E-01	5.30E-01	6.92E-02	1.57E-02	4.11E-05	1.81E-06

Table 15.6-11

Loss-of-Coolant Accident
Activity Released to the Environment (Curies) - 20 Minute Drawdown

Isotope	0.25 hrs	0.5 hrs	0.75 hrs	1 hrs	2 hrs	4 hrs	8 hrs	24 hrs	30 d
^{131}I	6.59E+01	1.39E+02	1.80E+02	2.31E+02	4.48E+02	5.49E+02	6.37E+02	8.35E+02	3.03E+03
^{132}I	8.83E+01	1.82E+02	2.31E+02	2.89E+02	5.27E+02	7.45E+02	1.13E+03	2.52E+03	1.15E+04
^{133}I	1.28E+02	2.69E+02	3.47E+02	4.44E+02	8.49E+02	1.03E+03	1.17E+03	1.42E+03	1.67E+03
^{134}I	1.23E+02	2.45E+02	2.99E+02	3.53E+02	4.98E+02	5.25E+02	5.28E+02	5.28E+02	5.28E+02
^{135}I	1.17E+02	2.44E+02	3.13E+02	3.97E+02	7.35E+02	8.74E+02	9.63E+02	1.05E+03	1.06E+03
Total iodines	5.22E+02	1.08E+03	1.37E+03	1.71E+03	3.06E+03	3.72E+03	4.43E+03	6.35E+03	1.78E+04
^{83m}Kr	1.09E+01	4.59E+01	1.47E+02	3.80E+02	2.19E+03	4.92E+03	6.81E+03	7.35E+03	7.35E+03
^{85m}Kr	2.34E+01	1.02E+02	3.43E+02	9.21E+02	6.15E+03	1.67E+04	2.99E+04	4.36E+04	4.42E+04
^{85}Kr	1.34E+00	6.00E+00	2.09E+01	5.82E+01	4.33E+02	1.37E+03	3.25E+03	1.07E+04	1.64E+05
^{87}Kr	3.98E+01	1.62E+02	5.03E+02	1.25E+03	6.46E+03	1.27E+04	1.55E+04	1.59E+04	1.59E+04
^{88}Kr	5.95E+01	2.55E+02	8.42E+02	2.22E+03	1.40E+04	3.49E+04	5.53E+04	6.71E+04	6.73E+04
^{89}Kr	9.01E+00	1.13E+01	1.16E+01	1.16E+01	1.16E+01	1.16E+01	1.16E+01	1.16E+01	1.16E+01
^{131m}Xe	9.12E-01	4.07E+00	1.42E+01	3.94E+01	2.93E+02	9.28E+02	2.18E+03	7.06E+03	5.55E+04
^{133m}Xe	5.42E+00	2.41E+01	8.40E+01	2.33E+02	1.72E+03	5.38E+03	1.24E+04	3.71E+04	9.18E+04
^{133}Xe	1.77E+02	7.92E+02	2.76E+03	7.66E+03	5.68E+04	1.80E+05	4.22E+05	1.35E+06	6.45E+06
^{135m}Xe	2.28E+01	6.80E+01	1.40E+02	2.36E+02	4.35E+02	4.58E+02	4.59E+02	4.59E+02	4.59E+02
^{135}Xe	4.33E+01	1.98E+02	6.85E+02	1.86E+03	1.34E+04	4.24E+04	9.96E+04	2.67E+05	3.33E+05
^{137}Xe	2.69E+01	3.79E+01	3.99E+01	4.04E+01	4.04E+01	4.04E+01	4.04E+01	4.04E+01	4.04E+01
^{138}Xe	7.66E+01	2.35E+02	5.02E+02	8.78E+02	1.74E+03	1.87E+03	1.87E+03	1.87E+03	1.87E+03
Total noble gases	4.97E+02	1.94E+03	6.09E+03	1.58E+04	1.04E+05	3.02E+05	6.49E+05	1.81E+06	7.23E+06
Alkali metals	2.99E+01	6.16E+01	7.76E+01	9.54E+01	1.68E+02	1.96E+02	2.10E+02	2.14E+02	2.16E+02
Te-group	6.96E+00	1.64E+01	3.87E+01	8.25E+01	2.70E+02	3.38E+02	3.71E+02	3.81E+02	3.82E+02
Noble metals	0	0	1.54E+00	4.94E+00	2.01E+01	2.56E+01	2.84E+01	2.93E+01	2.94E+01
La-group	0	0	2.30E-01	7.72E-01	3.23E+00	4.56E+00	5.82E+00	6.30E+00	6.65E+00
Ce-group	0	0	1.13E+00	3.66E+00	1.51E+01	1.94E+01	2.15E+01	2.22E+01	2.22E+01

Table 15.6-12

Loss-of-Coolant Accident
(Design Basis Analysis)
Radiological Effects

Total Effect	TEDE (rem)
Exclusion area (1950 m) (2 hr)	4.1
Low population zone (4827 m) (30 days)	4.0
Control Room (30 days)	3.5

Table 15.6-13

Sequence of Events for Feedwater Line Break
Outside Containment

Time	Event
0	One feedwater line breaks.
0+	Feedwater line check valves isolate the reactor from the break.
<30 sec	At low reactor water level, reactor scram would initiate and, at low-low reactor water level, HPCS and MSIV closure[b] would initiate and recirculation pumps would trip.
2 minutes[a]	The SRVs open and close and maintain the reactor vessel pressure at approximately 1100 psig.
1 to 2 hr	Normal reactor cooldown established.

[a] Approximately.

[b] The analysis has not been updated for the change in MSIV isolation setpoint from Level 2 to Level 1 because it remains bounded by the recirculation line break LOCA (Reference 15.6-9).

Table 15.6-14

Feedwater Line Break Accident - Parameters
Tabulated for Postulated Accident Analysis

	Parameter	Value
I.	Data and assumptions used to estimate radioactive source from postulated accidents	
	A. Power level	N/A
	B. Burnup	N/A
	C. Fuel damaged	None
	D. Release of activity by nuclide	Table 15.6-15
	E. Iodine fractions	
	(1) Organic	0
	(2) Elemental	1%
	(3) Particulate	0
	(4) Reactor coolant activity before the accident	Section 15.6.6.5.1
II.	Data and assumptions used to estimate activity released	
	A. Primary containment leak rate (%/day)	N/A
	B. Secondary containment leak rate (%/day)	N/A
	C. RWCU total isolation valve closure time (sec)	75
	D. Adsorption and filtration efficiencies	
	(1) Organic iodine	N/A
	(2) Elemental iodine	N/A
	(3) Particulate iodine	N/A
	(4) Particulate fission products	N/A
	E. Recirculation system parameters	N/A
	(1) Flow rate	N/A
	(2) Mixing efficiency	N/A
	(3) Filter efficiency	N/A
	F. Containment spray parameters (flow rate, drop size, etc.)	N/A
	G. Containment volumes	N/A
	H. All other pertinent data and assumptions	None

Table 15.6-14

Feedwater Line Break Accident - Parameters
Tabulated for Postulated Accident Analysis (Continued)

	Parameter	Value
III.	Dispersion data	
	A. Boundary and LPZ distance (m)	1950/4827
	B. χ/Qs for time intervals of 0-2 hr - EAB/LPZ	$2.62 \times 10^{-4}/1.06 \times 10^{-4}$
IV.	Dose data	
	A. Method of dose calculation	Reference 15.6-2
	B. Dose conversion assumptions	Reference 15.6-2
	C. Peak activity concentrations in containment	N/A
	D. Doses	Table 15.6-16

Table 15.6-15

Feedwater Line Break Accident
Activity Release to Environment (Curies)

Isotope	Activity
^{131}I	2.22×10^{-2}
^{132}I	2.05×10^{-1}
^{133}I	1.52×10^{-1}
^{134}I	4.45×10^{-1}
^{135}I	2.22×10^{-1}
Total	1.04 x 10

Table 15.6-16

Feedwater Line Break Accident
Biological Effects of a Puff Release

Area	Whole Body Dose (rem)	Thyroid Dose (rem)
Exclusion area (1950 m)	1.37×10^{-4}	5.47×10^{-3}
Low population zone (4827 m)	5.53×10^{-5}	2.21×10^{-3}

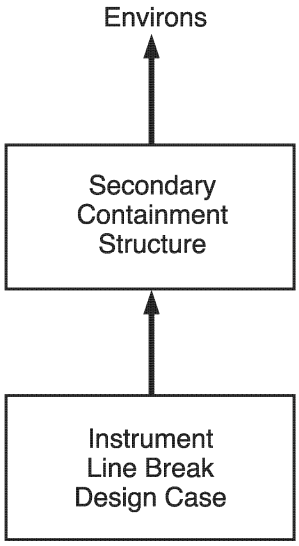

Columbia Generating Station Final Safety Analysis Report	Leakage Path for Instrument Line Break		
	Draw. No. 900547.73	Rev.	Figure 15.6-1

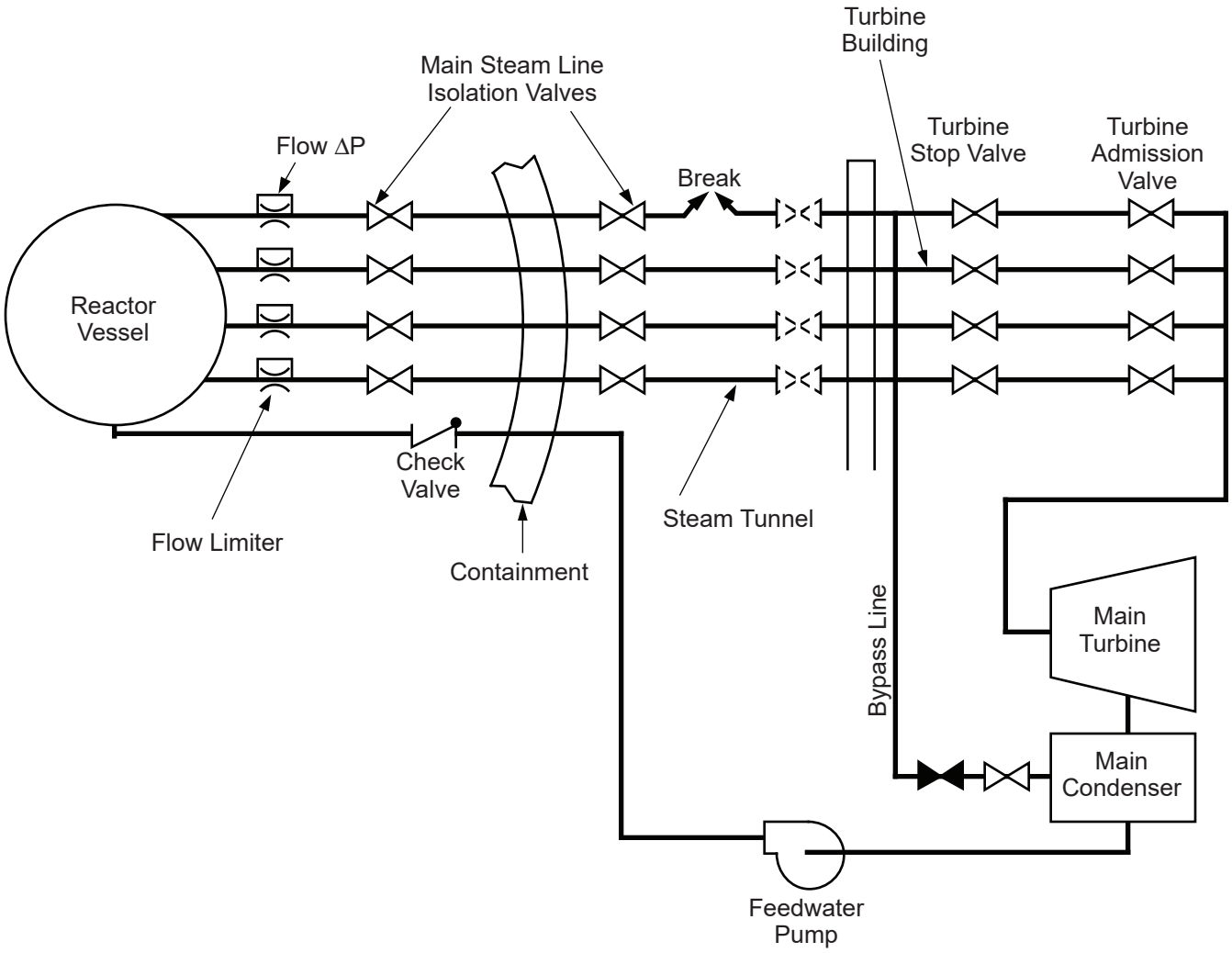

Columbia Generating Station Final Safety Analysis Report	Steam Flow Schematic for Steam Break Outside Containment		
	Draw. No. 900547.74	Rev.	Figure 15.6-2

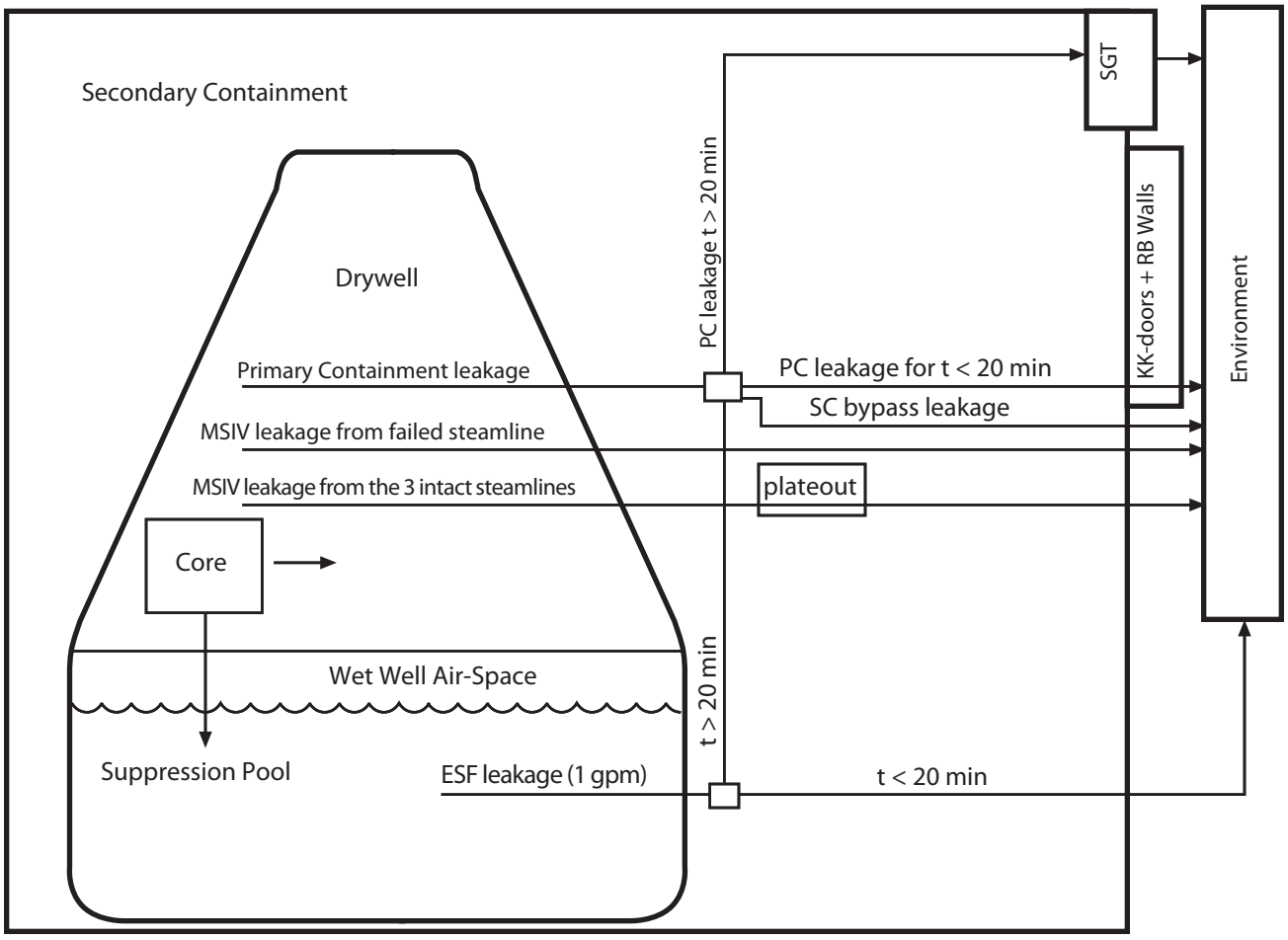

Columbia Generating Station Final Safety Analysis Report	Leakage Path for LOCA		
	Draw. No. 900547.75	Rev.	Figure 15.6-3

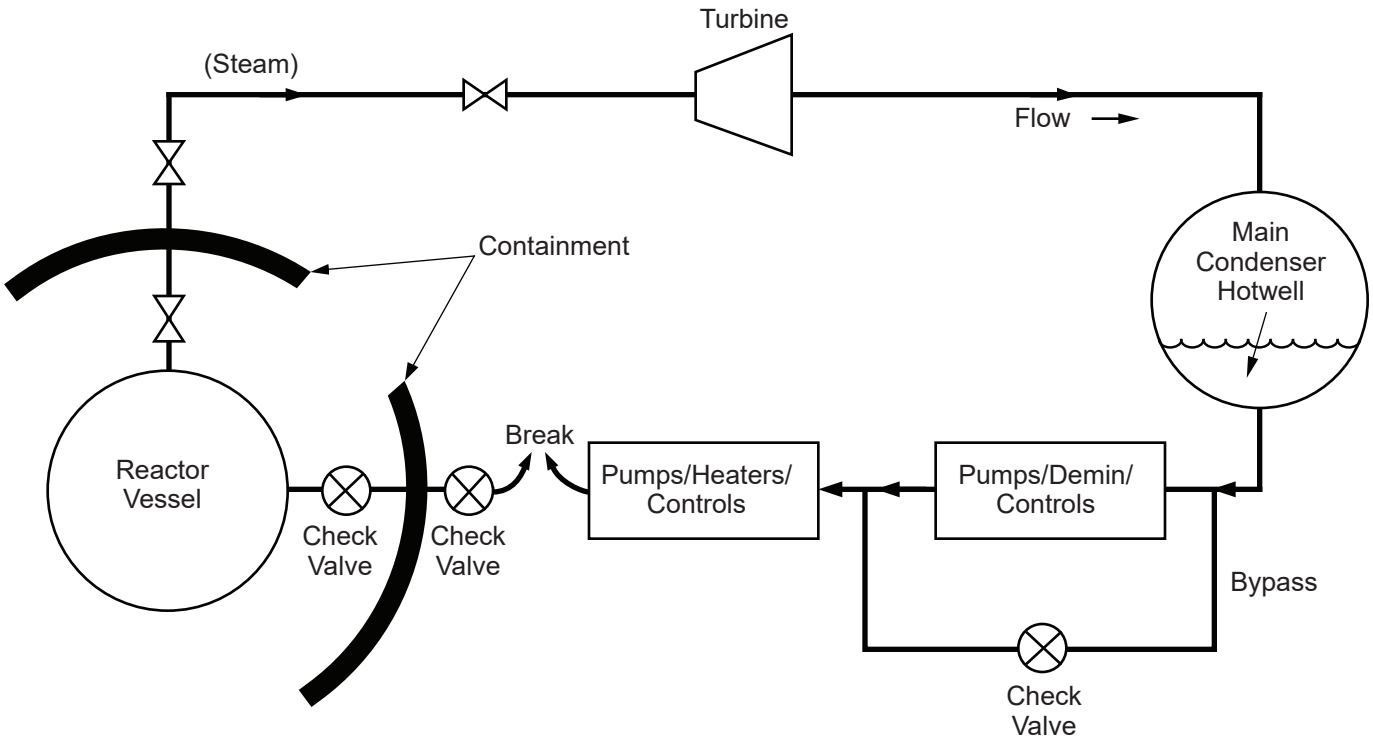

Columbia Generating Station Final Safety Analysis Report	Leakage Path for Feedwater Line Break Outside Containment		
	Draw. No. 900547.76	Rev.	Figure 15.6-4

15.7 RADIOACTIVE RELEASE FROM SUBSYSTEMS AND COMPONENTS

These events are classified as nonlimiting events for both original and uprated power conditions. Therefore, no further analysis has been performed.

15.7.1 RADIOACTIVE GAS WASTE SYSTEM LEAK OR FAILURE

Not applicable.

15.7.2 LIQUID RADIOACTIVE SYSTEM FAILURE

Not applicable.

15.7.3 POSTULATED RADIOACTIVE RELEASES DUE TO LIQUID RADWASTE TANK FAILURE

15.7.3.1 Identification of Causes and Frequency Classification

15.7.3.1.1 Identification of Causes

The liquid radwaste tanks are constructed to specific engineering codes and standards and to the uniform building code seismic requirements. These tanks operate at atmosphere pressure and low temperatures. A positive action interlock system is provided to prevent inadvertent opening of a drain valve because of operator error. Accordingly, the possibility of a complete tank failure or drainage is considered small.

An unspecified event is postulated to cause the complete release of the average radioactivity inventory in the tank containing the largest quantities of significant radionuclides in the liquid radwaste system. The tank postulated to rupture is one of the two decontamination solution concentrated waste tanks (see Figure 11.2-1).

15.7.3.1.2 Frequency Classification

This accident is categorized as a limiting fault.

15.7.3.2 Sequence of Events and Systems Operation

15.7.3.2.1 Sequence of Events

The sequence of events expected to occur is as follows:

Sequence of Events - Liquid Radwaste Tank Failure

Events	Time
Event begins-failure occurs	0
Area radiation alarms alert plant personnel	~ 1 minute
Operator action begins	~ 10 minute

15.7.3.2.2 Systems Operation

Failure of a concentrated waste tank does not require a shutdown nor does it impair a safe shutdown. It will lead to limited operation of the concentrated waste system using the remaining tank.

The liquid contents of this tank will also be contained by the building walls and an unlined, 18-in. high concrete dike around the radwaste tank area. Floor drain sump pumps would receive a high water level alarm, activate automatically, and remove the spilled liquid.

15.7.3.2.3 The Effects of Single Failures and Operator Errors

This event has been analyzed without taking credit for any expected operator action or system operation; therefore, a discussion of single equipment failure or single operator error is not applicable.

15.7.3.3 Core and System Performance

The failure of this liquid radwaste system component does not directly affect the nuclear steam supply system (NSSS). It will lead to decoupling of NSSS with the subject system.

This failure has no applicable effect on the reactor core or the NSSS safety performance. Specific assumptions and parameters are presented in Table 15.7-1.

15.7.3.4 Barrier Performance

This event does not involve any containment barrier integrity except the tank itself and the radwaste building. The dike and walls of the radwaste building surrounding the tanks are built to Seismic Category I criteria. In the analysis of spill consequences, no credit is taken for the dike or radwaste building in recontaining the spilled liquid.

15.7.3.5 Radiological Consequences

The entire volume (700 gal) of concentrator waste tank assumed to spill with isotope inventory given in Table 11.2-1. Tritium concentration is assumed to be 0.01 µCi/ml (Environmental Report, Operating License Section 3.5.1).

The hypothetical radwaste tank failure was evaluated using conservative assumptions such as no containment in the radwaste building and unimpeded flow vertically through 50-60 ft of sand and gravel.

The following offsite concentration data for the radionuclides of interest are provided for the WNP-1/4 wells and at the Columbia River:

Radionuclide	Concentration at WNP-1/4 Wells (µCi/ml)	Concentration at Columbia River (µCi/ml)	Concentration Limit (µCi/ml)
^{3}H	1.0×10^{-7}	1.3×10^{-8}	1×10^{-3}
^{90}Sr	1.7×10^{-4}	4.2×10^{-7}	5×10^{-7}
^{137}Cs	2.2×10^{-10}	1.4×10^{-27}	1×10^{-6}

The calculations show the strontium concentration exceeding the unrestricted area limitation at the WNP-1/4 wells. These wells are a temporary water supply and are under the control of Energy Northwest. Should a spill occur there will be ample time to assess the severity and extent of contamination.

Concentration at the river bank will be diluted by the river flow. The nearest surface water users are several miles downstream.

15.7.4 FUEL HANDLING ACCIDENT

15.7.4.1 Identification of Causes and Frequency Classification

15.7.4.1.1 Identification of Causes

The fuel handling accident is assumed to occur as a consequence of a failure of the fuel assembly lifting mechanism resulting in dropping a raised irradiated fuel assembly onto other fuel bundles seated in the reactor pressure vessel (RPV). The event was selected as the bounding event because it considers the maximum height and weight, while assuming a minimum water level above the damaged fuel.

15.7.4.1.2 Frequency Classification

This event is categorized as a limiting fault.

15.7.4.2 Sequence of Events and Systems Operation

The following sequence of events is assumed in the analysis.

No fuel movement will take place in the first 24 hr following shutdown. At 24 hr post-shutdown fuel movement starts and the fuel handling equipment is assumed to fail dropping the fuel grapple and an irradiated fuel bundle onto the irradiated fuel bundles seated in the RPV. Fuel is damaged and fission products are released to the reactor coolant, then to the reactor building atmosphere, and finally to the environment over a 2-hr period. No credit is taken for holdup or mixing in the reactor building, nor is credit taken for filtration by the standby gas treatment (SGT).

15.7.4.2.1 The Effects of Single Failures and Operator Errors

No systems or operator actions are credited to mitigate a fuel handling accident.

15.7.4.3 Core and System Performance

15.7.4.3.1 Mathematical Model

Because of the complex nature of the impact and the resulting damage to fuel assembly components, a rigorous prediction of the number of failed rods is not possible. For this reason, a simplified energy approach was taken and numerous conservative assumptions were made to ensure a conservative estimate of the number of failed rods.

The kinetic energy acquired by a falling fuel assembly may be dissipated in one or more impacts. The energy absorption on successive impacts is estimated by considering a plastic impact.

The energy transferred in the dropped assembly is considered in two phases. First, the fuel assembly is expected to impact on the reactor core at a small angle from the vertical, inducing a bending mode of failure on the fuel rods of the dropped assembly. The kinetic energy of the fall is dissipated in the impact. The analysis assumes that the energy of the dropped assembly is absorbed by only the cladding and other core structures. The assumption that no energy is absorbed by the fuel material results in considerable conservatism in the mass-energy calculations. Half of the energy is dissipated in the structure of the dropped assembly, failing all the rods in the assembly. The remaining half is allocated evenly across the structural mass of the impacted assemblies. The energy dissipated by the cladding is calculated by multiplying the impacted assembly energy by the cladding mass fraction and dividing by the energy required to fail a rod (based on 1% uniform plastic deformation).

The second phase considers the kinetic energy developed by the irradiated fuel assembly and lifting mechanism tipping over and impacting the core horizontally. The kinetic energy developed is equal to the initial potential energy of the assembly relative to the top of the core. Again, half of the energy is absorbed by the dropped assembly and half by the impacted assemblies. The number of failed rods in the impacted assemblies is determined using the cladding mass fraction and the energy required to fail a rod.

15.7.4.3.2 Input Parameters and Initial Conditions

The parameters and conditions used to determine the number of failed rods are listed below:

a. The fuel assembly is dropped from a height of 34 ft. The maximum height allowed by the fuel handling equipment is less than 34 ft;

b. The dropped mass consists of a fuel assembly (600 lb bounding analyzed wet weight for GNF2 10 x 10 fuel, 586 lb bounding analyzed wet weight for GE14 10 x 10 fuel, 617 lb wet weight for GE 8 x 8 fuel and 665 lb dry weight for ATRIUM-10) and the fuel grapple (350 lb wet weight);

c. The energy required to fail a fuel rod is approximately 157 ft-lb for GNF2 10 x 10 fuel, 175 ft-lb for GE14 10 x 10 fuel, 250 ft-lb for GE 8 x 8 fuel and 205 ft-lb for ATRIUM-10; see Reference 15.7-3 for SVEA-96.

15.7.4.3.3 Results

Based on a core of GE 8 x 8 fuel, the calculation predicts 124 failed fuel rods; 62 rods in the dropped assembly, 43 rods in the first impact, and 19 additional rods in the second impact. Westinghouse analysis predicts a maximum of 123 failed rods (Reference 15.7-3) and AREVA NP calculated that up to 156 rods could fail (Reference 15.7-4). Analysis of the GE14 10 x 10 fuel estimates that a total of 151 fuel rods will fail (Reference 15.7-5). Analysis of GNF2 10 x 10 fuel estimates that a total of 172 fuel rods will fail (Reference 15.7-6).

15.7.4.4 Barrier Performance

The reactor coolant pressure boundary, primary containment and secondary containment are open at the time of the accident. However, a similar event could occur in the spent fuel pool (SFP), during spent fuel transfer from the RPV to, or handling in, the SFP. Assuming a drop height of 4 ft, the number of failed rods as a result of a GE 8 x 8 bundle (unchanneled) drop in the SFP was calculated and found to be 90 rods; the number for channeled GE 8 x 8 is less than that. The dose analysis for a drop of a bundle over the core, which assumes 250 failed rods, bounds a drop of a bundle in the SFP.

15.7.4.5 Radiological Consequences

The fission product inventory is based on a plant-specific ORIGEN 2 run for pre-power uprate basis of 3489 MW with 1000 days exposure adjusted as described in Section 15.4.9.5.1. The release is based on damage to 250 fuel rods. A 24-hr period for decay from the power condition is assumed. Figure 15.7-1 indicates the leakage flow path for this accident.

15.7.4.5.1 Design Basis Analysis

Specific values of parameters used in the evaluation are presented in Table 15.7-2. The dispersion coefficients used to determine offsite doses are presented in Table 15.0-4.

15.7.4.5.1.1 Fission Product Release From Fuel. The fission product inventory of a core average exposure fuel rod is adjusted by a peaking factor of 1.7 to establish the inventory of each damaged rod. Five percent of the noble gases inventory (10% for ^{85}Kr) and 5% of the iodine inventory (8% for ^{131}I), and 12% of the alkali metals inventory are assumed to be released to the reactor well. The activity airborne in the secondary containment is presented in Table 15.7-3.

15.7.4.5.1.2 Fission Product Transport to the Environment. The transport pathway consists of mixing in the reactor well water, migration from the reactor well to the secondary containment atmosphere, and release to the environment without passing through the SGT. All of the noble gas, 0.5% of the iodines, and 0% of the alkali metals are assumed to become airborne in the secondary containment (Reference 15.7-1).

From the activity airborne in the reactor building, 99% is released to the environment in 2 hr.

The release of activity to the environment is presented in Table 15.7-4.

15.7.4.5.1.3 Results. The calculated doses for the design basis analysis are presented in Table 15.7-5 and are within the limits of 10 CFR 50.67.

15.7.5 SPENT FUEL CASK DROP ACCIDENT

The spent fuel cask is equipped with ANSI N14.6 (Reference 15.7-2) compliant lifting lugs and a lifting yoke compatible with the reactor building crane main hook. The reactor building crane is provided with sufficient redundancy such that no credible postulated failure of any crane component required to lift, hold, and move loads, will result in the dropping of the fuel cask. Therefore, an analysis of the spent fuel cask drop is not required.

15.7.6 REFERENCES

15.7-1 Energy Northwest, "Columbia Generating Station Alternative Source Term," CGS-FTS-0168, Revision 2, June 2011.

15.7-2 "Special Lifting Devices for Shipping Containers Weighing 10,000 Pounds (4500 kg) or More," ANSI N14.6-1993, June 1993.

15.7-3 ABB/Combustion Engineering, "Fuel Assembly Mechanical Design Report for WNP-2," CE NPSD-792-P, May 1996.

15.7-4 AREVA NP, "Columbia Generating Station Cycle 19 Reload Analysis," ANP-2602, Revision 0, March 2007.

15.7-5 GE Hitachi Nuclear Energy, GEH-0000-0075-4920, Revision 6, "GE14 Fuel Design Cycle-Independent Analyses for Energy Northwest Columbia Generating Station," May 2017.

15.7-6 GE Hitachi Nuclear Energy, 002N3439, "GNF2 Fuel Design Cycle-Independent Analyses for Energy Northwest Columbia Generating Station," (most recent version referenced in the COLR).

Table 15.7-1

Liquid Radwaste Tanks Failure – Parameters and Concentrations

	Parameter	Value
I.	Data and assumptions used to estimate radioactive source	Entire volume (700 gal) of concentrator waste tank assumed to spill with isotope inventory given in Table 11.2-1. Tritium concentration assumed to be 0.01 mCi/ml from the CGS ER-OL.
II.	Data and assumptions used to estimate activity released	
	A. Containment leak rate (%/day)	N/A
	B. Secondary containment leak rate (%/day)	N/A
	C. Valve movement times	N/A
	D. Absorption and filtration efficiencies	N/A
	(1) Organic iodine	N/A
	(2) Elemental iodine	N/A
	(3) Particulate iodine	N/A
	(4) Particulate fission products	N/A
	E. Recirculation system parameters	N/A
	(1) Flow rate	N/A
	(2) Mixing efficiency	N/A
	(3) Filter efficiency	N/A
	F. Containment spray parameters (flow rate, drop size, etc.)	N/A
	G. Containment volumes	N/A
	H. Other pertinent data and assumptions	See Section 2.4.13.3
III.	Concentration data	

@ WNP-1/4 Wells Radionuclide	@ Col. R (µCi/ml)	Conc. Limit[a] (µCi/ml)	(µCi/ml)
^{3}H	1.0×10^{-7}	1.3×10^{-8}	1×10^{-3}
^{90}Sr	1.7×10^{-4}	4.2×10^{-7}	5×10^{-7}
^{137}Cs	2.2×10^{-10}	1.4×10^{-27}	1×10^{-6}

[a] From 10 CFR Part 20.

Table 15.7-2

Fuel Handling Accident Parameters Tabulated for Postulated Accident Analysis

	Parameters	Design Basis Assumptions
I.	Data and assumptions used to estimate radioactive source from postulated accidents	
	A. Power level	3556
	Fuel decay period	24 hrs
	B. Radial peaking factor	1.7
	C. Assumed fuel damaged	250 rods
	Bundles in the core	764
	Rods per bundle	62
	D. Release of activity from the gap to the reactor well water	Figure 15.7-1
	E. Iodine species fractions released	Figure 15.7-1
	(1) Organic	
	(2) Elemental	
	(3) Particulate	
	F. Reactor coolant activity before the accident	N/A
II.	Data and assumptions used to estimate activity released	
	A. Primary containment leak rate (%/day)	N/A
	B. Secondary containment release rate	99% of the activity in 2 hr with a flow rate of 2.3 SC volumes per hr
	C. Valve movement times	N/A
	D. SGT filtration	N/A
	E. Scrubbing by reactor well water	Figure 15.7-1
	(1) Organic iodine	
	(2) Elemental iodine	
	(3) Particulate iodine	
	(4) Particulate alkali metals	

Table 15.7-2

Fuel Handling Accident Parameters Tabulated
for Postulated Accident Analysis (Continued)

	Parameters	Design Basis Assumptions
	F. Recirculation system parameters	
	(1) Flow rate	N/A
	(2) Mixing efficiency	N/A
	(3) Filter efficiency	N/A
	G. Containment spray parameters (flow rate, drop size, etc.)	N/A
	H. Containment volumes	N/A
	I. Other pertinent data and assumptions	
	(1) SGT filtration	None
	(2) CREF filtration	None
	(3) Holdup in reactor building	None
	(4) Mixing in reactor building	None
III.	Dispersion data (for duration of release, 0 – 2 hr)	
	(1) Offsite	Table 15.0-4
	(2) Control room	8.69E-4 sec/m^3
IV.	Dose data	
	A. Method of dose calculation	Regulatory Guide 1.183
	B. Dose conversion assumptions	Regulatory Guide 1.183
	C. Peak activity concentrations in containment	N/A
	D. Doses	Table 15.7-5

Table 15.7-3

Fuel Handling Accident
Activity Airborne in Secondary Containment (Curies)

Isotope	6 minutes	12 minutes	0.5 hr	1 hr	2 hr	4 hr	8 hr	1 day	4 days	30 days
^{131}I	2.64E+02	2.10E+02	1.05E+02	3.31E+01	3.29E+00	3.26E+00	3.22E+00	3.04E+00	2.35E+00	2.51E-01
^{132}I	1.95E-01	1.50E-01	6.87E-02	1.87E-02	1.39E-03	7.65E-04	2.33E-04	1.98E-06	9.73E-16	6.23E-20
^{133}I	1.58E+02	1.25E+02	6.19E+01	1.93E+01	1.86E+00	1.74E+00	1.52E+00	8.96E-01	8.21E-02	8.31E-11
^{134}I	1.54E-06	1.13E-06	4.44E-07	9.40E-08	4.21E-09	8.45E-10	3.40E-11	8.99E-17	6.50E-19	1.25E-36
^{135}I	2.72E+01	2.14E+01	1.04E+01	3.11E+00	2.80E-01	2.28E-01	1.51E-01	2.91E-02	1.75E-05	1.10E-22
Total iodine	4.49E+02	3.56E+02	1.77E+02	5.55E+01	5.43E+00	5.23E+00	4.90E+00	3.97E+00	2.43E+00	2.51E-01
^{83m}Kr	5.55E-01	4.25E-01	1.90E-01	4.98E-02	3.42E-03	1.62E-03	3.62E-04	9.06E-07	1.78E-18	7.63E-20
^{85m}Kr	2.10E+02	1.64E+02	7.85E+01	2.29E+01	1.95E+00	1.42E+00	7.57E-01	6.04E-02	6.91E-07	5.85E-21
^{85}Kr	1.06E+03	8.42E+02	4.22E+02	1.33E+02	1.33E+01	1.33E+01	1.33E+01	1.33E+01	1.33E+01	1.32E+01
^{87}Kr	3.24E-02	2.43E-02	1.03E-02	2.49E-03	1.44E-04	4.81E-05	5.39E-06	8.50E-10	9.87E-22	1.21E-30
^{88}Kr	6.26E+01	4.85E+01	2.26E+01	6.30E+00	4.91E-01	2.99E-01	1.11E-01	2.11E-03	3.80E-11	4.03E-22
^{89}Kr	6.66E-19	1.43E-19	1.54E-21	1.49E-23	1.56E-24	2.38E-20	3.88E-19	4.10E-20	1.19E-19	4.03E-51
^{131m}Xe	3.39E+02	2.70E+02	1.35E+02	4.26E+01	4.24E+00	4.22E+00	4.18E+00	4.02E+00	3.38E+00	7.55E-01
^{133m}Xe	1.58E+03	1.25E+03	6.26E+02	1.97E+02	1.94E+01	1.89E+01	1.80E+01	1.47E+01	5.95E+00	2.34E-03
^{133}Xe	6.73E+04	5.34E+04	2.68E+04	8.50E+03	9.24E+02	1.30E+03	1.98E+03	3.78E+03	4.60E+03	1.62E+02
^{135m}Xe	1.92E-20	1.17E-20	2.64E-21	2.22E-22	1.88E-24	1.85E-26	4.61E-28	1.38E-20	1.72E-21	7.32E-53
^{135}Xe	1.67E+04	1.32E+04	6.58E+03	2.14E+03	3.64E+02	1.02E+03	1.71E+03	1.39E+03	1.22E+01	5.37E-20
^{137}Xe	6.42E-21	1.76E-21	3.71E-23	2.48E-25	6.80E-27	4.31E-24	1.39E-19	1.11E-20	1.01E-20	8.74E-51
^{138}Xe	1.73E-20	1.07E-20	2.58E-21	2.42E-22	2.50E-24	2.92E-26	4.76E-28	1.83E-21	2.69E-22	3.34E-52
Total noble gases	8.73E+04	6.92E+04	3.47E+04	1.10E+04	1.33E+03	2.36E+03	3.73E+03	5.20E+03	4.63E+03	1.76E+02

Table 15.7-4

Fuel Handling Accident
Activity Released to the Environment (Curies)

Isotope	6 minutes	12 minutes	0.5 hr	1 hr	2 hr	4 hr	8 hr	1 day	4 days	30 days
^{131}I	6.84E+01	1.23E+02	2.28E+02	2.98E+02	3.28E+02	3.28E+02	3.29E+02	3.29E+02	3.29E+02	3.29E+02
^{132}I	5.12E-02	9.07E-02	1.63E-01	2.07E-01	2.23E-01	2.23E-01	2.23E-01	2.23E-01	2.23E-01	2.23E-01
^{133}I	4.09E+01	7.33E+01	1.35E+02	1.77E+02	1.95E+02	1.95E+02	1.95E+02	1.95E+02	1.95E+02	1.95E+02
^{134}I	4.16E-07	7.21E-07	1.23E-06	1.49E-06	1.56E-06	1.56E-06	1.56E-06	1.56E-06	1.56E-06	1.56E-06
^{135}I	7.07E+00	1.26E+01	2.31E+01	3.01E+01	3.28E+01	3.28E+01	3.28E+01	3.28E+01	3.28E+01	3.28E+01
Total iodine	1.16E+02	2.09E+02	3.86E+02	5.06E+02	5.56E+02	5.56E+02	5.57E+02	5.57E+02	5.57E+02	5.57E+02
^{83m}Kr	1.47E-01	2.59E-01	4.61E-01	5.81E-01	6.21E-01	6.21E-01	6.21E-01	6.21E-01	6.21E-01	6.21E-01
^{85m}Kr	5.49E+01	9.78E+01	1.78E+02	2.30E+02	2.50E+02	2.50E+02	2.50E+02	2.50E+02	2.50E+02	2.50E+02
^{85}Kr	2.75E+02	4.93E+02	9.13E+02	1.20E+03	1.32E+03	1.32E+03	1.32E+03	1.32E+03	1.32E+03	1.32E+03
^{87}Kr	8.63E-03	1.51E-02	2.64E-02	3.28E-02	3.47E-02	3.47E-02	3.47E-02	3.47E-02	3.47E-02	3.47E-02
^{88}Kr	1.64E+01	2.92E+01	5.26E+01	6.73E+01	7.26E+01	7.26E+01	7.26E+01	7.26E+01	7.26E+01	7.26E+01
^{89}Kr	3.64E-19	4.43E-19	4.64E-19	4.64E-19	4.64E-19	4.64E-19	4.65E-19	4.78E-19	4.38E-16	1.27E-13
^{131m}Xe	8.80E+01	1.58E+02	2.92E+02	3.85E+02	4.23E+02	4.23E+02	4.23E+02	4.23E+02	4.23E+02	4.23E+02
^{133m}Xe	4.10E+02	7.35E+02	1.36E+03	1.79E+03	1.96E+03	1.96E+03	1.96E+03	1.96E+03	1.96E+03	1.96E+03
^{133}Xe	1.74E+04	3.13E+04	5.79E+04	7.63E+04	8.40E+04	8.40E+04	8.40E+04	8.40E+04	8.40E+04	8.40E+04
^{135m}Xe	5.74E-21	9.23E-21	1.34E-20	1.46E-20	1.47E-20	1.47E-20	1.47E-20	1.47E-20	9.44E-18	1.02E-13
^{135}Xe	4.34E+03	7.78E+03	1.44E+04	1.89E+04	2.10E+04	2.10E+04	2.10E+04	2.10E+04	2.10E+04	2.10E+04
^{137}Xe	3.03E-21	3.86E-21	4.16E-21	4.17E-21	4.17E-21	4.17E-21	4.31E-21	2.95E-20	8.44E-16	1.27E-13
^{138}Xe	5.10E-21	8.26E-21	1.22E-20	1.34E-20	1.35E-20	1.35E-20	1.35E-20	1.35E-20	5.69E-18	1.05E-13
Total noble gases	2.26E+04	4.06E+04	7.51E+04	9.89E+04	1.09E+05	1.09E+05	1.09E+05	1.09E+05	1.09E+05	1.09E+05

Table 15.7-5

Fuel Handling Accident (Design Basis Analysis)
Radiological Effects

Area	TEDE (rem)
Exclusion area (1950 m) (2 hr)	1.0
Low population zone (4827 m) (30 day)	0.3
Control room (30 day)	3.7

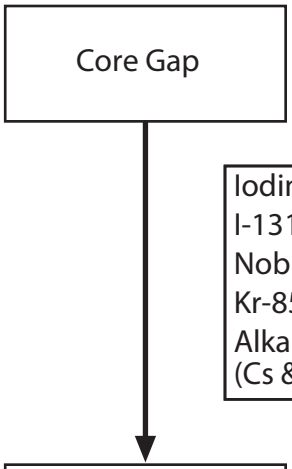

	% Activity Released	Species Fractions Released		
		Particulate	Elemental	Organic
Iodines	5	0.95	0.0485	0.0015
I-131	8	0.95	0.0485	0.0015
Noble Gas	5	0	1	0
Kr-85	10	0	1	0
Alkali Metals (Cs & Rb)	12	1	0	0

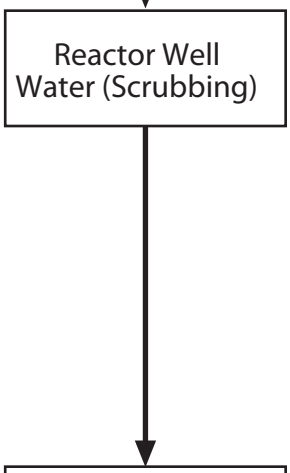

	Scrubbing by Reactor Well Water		
	% Scrubbed	% Released	DF
Particulate*	100	0	∞
Elemental	99.714	0.286	350
Organic	0.286	99.714	1

* All Alkali Metals are particulates and get 100% scrubbed, All particulate iodines convert to elemental.

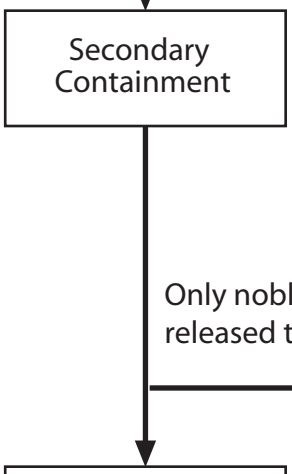

(1) No SGT Filtration
(2) No Holdup in Reactor Building
(3) No Mixing in Reactor Building

Only noble gases, elemental and organic iodines get released to the environment and to the Control Room

No CREF filtration

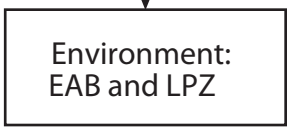

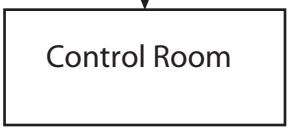

Columbia Generating Station
Final Safety Analysis Report

Leakage Path for Fuel Handling Accident

Draw. No. 900547.77	Rev.	Figure 15.7-1

15.8 ANTICIPATED TRANSIENTS WITHOUT SCRAM

15.8.0 CAPABILITIES OF PRESENT DESIGN TO ACCOMMODATE ANTICIPATED TRANSIENTS WITHOUT SCRAM

The anticipated transients without scram (ATWS) events described in this section are not design basis events for Columbia Generating Station (CGS). A proposed method for minimizing the effects of failure-to-scram is described in References 15.8-1 and 15.8-2.

The recirculation pump trip (RPT), alternate rod insertion (ARI), and two pump standby liquid control (SLC) system operation features are utilized at CGS to provide protection against failure to scram. Due to the CGS design feature utilizing SLC system injection through the high-pressure core spray (HPCS) header, a plant-unique analysis was performed to demonstrate ATWS protection and mitigation at pre-power uprate conditions.

The ATWS acceptance criteria are established in Reference 15.8-3 as:

a. The reactor coolant pressure boundary (RCPB) remains below emergency pressure limits,

b. The containment pressure remains below design limits. The suppression pool temperature remains below local saturation temperature limits as defined in Reference 15.8-3,

c. A coolable geometry is maintained,

d. Radiological releases are maintained within 10 CFR 100 allowable limits. With implementation of Alternate Source Term (AST), the radiological release acceptance criterion becomes 10 CFR 50.67, and

e. Equipment necessary to mitigate the postulated ATWS event are evaluated to provide a high degree of assurance (assurance of function) that it will function in the environment (pressure, temperature, humidity, and radiation) predicated to occur as a result of the ATWS event.

The ATWS analysis, performed in conformance with NEDE-24222, did not include a SLCS pump suction valve delay in the SLCS injection time. To determine the impact of the 35 sec opening time for the suction valves upstream of the SLCS pumps, the limiting ATWS event for peak suppression pool temperature (i.e., MSIVC) was analyzed with the 35 sec delay in SLC system injection time. The results presented for the hot shutdown time, peak suppression pool temperature, and peak containment pressure for MSIVC in Table 15.8-3 include the effects of the 35 sec delay.

Section 15.8.9 shows that for the ATWS event with the most severe heat flux transient, fuel related applicable limits were met with considerable margins. In addition, Reference 15.8-3 concludes that maximum peak cladding temperature will not exceed 2200°F and the maximum local oxidation will be much less than 17%. Thus, criteria 3 and 4 are shown to be satisfied by the plant specific and generic analyses. Sections 15.8.7 and 15.8.9 show that resulting primary system pressures will be less than emergency pressure limit and that suppression pool temperature increase and peak pressure are within design limits. Reference 15.8-3 concludes that the safety/relief valve (SRV) air clearing loads will be bounded by the design loads. Thus criteria 1 and 2 are satisfied. In Reference 15.8-5, Energy Northwest concluded that ATWS equipment had been determined to be qualified by (a) materials analysis of agreeable components including test reports when available, (b) existing qualification to other accident profiles (LOCA, HELB) that encompass the ATWS profile, or (c) location in a mild environment that is not affected by the ATWS accident environment. This satisfies criterion 5.

Power Uprate Evaluation

The ATWS events were analyzed at power uprate operating conditions to demonstrate protection and mitigation of the consequences of these events. These analyses were performed at 3629 MWt power level and bound operation at uprate power level of 3544 MWt. The selection of critical events which were analyzed were guided by Reference 15.8-3.

For power uprate evaluation, it was conservatively assumed that ARI has failed, thus, requiring SLC system injection to achieve reactor shutdown.

The analysis presented herein are applicable to application of flow control valve (FCV) or adjustable speed drive to reactor recirculation system (RRC). A summary of ATWS results are shown in Table 15.8-3. The analysis results presented in this section are based on a representative reload core at the time of the analysis (Cycle 8). Power uprate ATWS analyses were performed with Extended Load Line Limit Analysis (ELLLA) operating conditions. These analyses show that performance at the power uprate condition is within vessel maximum pressure, fuel temperature and containment pressure limits for the most severe ATWS transients (Reference 15.8-6).

Maximum Extended Load Line Limit Analysis (MELLLA)

The ATWS events were analyzed at MELLLA operating conditions to demonstrate protection and mitigation of the consequences of these events. These analyses were performed at 3486 MWt power level. The selection of critical events which were analyzed was guided by References 15.8-8, 15.8-10 and 15.8-11.

It was conservatively assumed that ARI has failed, thus requiring SLC system injection to achieve reactor shutdown. ATWS mitigation is achieved with one or two subsystems of SLC provided the SLC solution is enriched to 44 atom percent Boron-10.

A summary of ATWS results are shown in Table 15.8-3. The analysis results presented in this section are based on a representative reload core at the time of the analysis (Cycle 20) (Reference 15.8-12). The analysis was dispositioned for GNF2 fuel introduction (reference 15.8-13).

The analysis was dispositioned for power uprate to 3544 MWt (Reference 15.8-14).

15.8.1 INADVERTENT CONTROL ROD WITHDRAWAL

This transient is bounded by assumptions in the GE licensing topical reports and the other transients analyzed in this section.

15.8.2 LOSS OF FEEDWATER

15.8.2.1 Identification of Causes and Frequency Classification

15.8.2.1.1 Identification of Causes

Section 15.2.7 provides identification of causes for loss of feedwater event. The loss of feedwater event with failure to scram will initiate an ATWS event.

15.8.2.1.2 Frequency Classification

This event is of extremely low probability and is categorized as a limiting fault.

15.8.2.2 Sequence of Events and System Operation

15.8.2.2.1 Sequence of Events

Table 15.8-4 lists the sequence of events for Figure 15.8-1.

15.8.2.2.1.1 Identification of Operator Actions. For the simulation purpose, the following operator actions have been assumed.

a. Allow automatic operation of the HPCS and reactor core isolation cooling (RCIC),

b. Begin boron injection at two minutes following ATWS high-pressure trip or at boron injection initiation temperature (BIIT), whichever is later, and

c. Switch residual heat removal (RHR) to suppression pool cooling mode 11 minutes following initiation of the transient.

The emergency operating procedures provide operator actions for an ATWS event.

15.8.2.2.2 System Operation

For the loss of feedwater ATWS event, a complete failure to scram is postulated to occur for all reactor protection system (RPS) scram signals. All other plant control systems maintain normal operation. The relief valves are all assumed to function at the specified setpoints. Loss of feedwater flow results in a proportional reduction of vessel inventory causing the vessel water level to drop. The first corrective action is the initiation of HPCS and RCIC on Level 2. For this event, a complete failure of ARI is postulated. The operator must manually initiate SLC system to inject boron into the reactor vessel for reactor shutdown.

15.8.2.2.3 The Effect of Single Failure and Operator Errors

This ATWS event is based on the assumed complete failure of all control rods to scram. This is a multiple equipment failure. For the conservative assumption of failure of the ARI system, the ATWS event is terminated by boron injection through operator activation of the SLC system. This event is less limiting compared with other ATWS events analyzed at power uprate condition.

15.8.2.3 Core and System Performance

15.8.2.3.1 Mathematical Model

Reference 15.8-7 describes the generic evaluation methodology for the ATWS event evaluated at uprated power conditions. Additional plant specific analyses were performed for a bounding 10% power uprate using the same methodology.

15.8.2.3.2 Input Parameters and Initial Conditions

The initial operating conditions and equipment performance characteristics are given in Tables 15.8-1 and 15.8-2, respectively. MSIV closure occurs on low-low-low water level (L1) but is analyzed based on low-low water level (L2), conservatively overpredicting suppression pool heatup. The HPCS/RCIC flow rates are conservatively high and water level setpoints represent nominal values. The ATWS high pressure setpoint was set at the upper analytical limit. The SRV setpoints were set using a statistical spread of the analytical setpoint limits for the first opening of each value and reset to a statistical spread of the nominal setpoints for all remaining SRV openings during the transient event.

15.8.2.3.3 Results

The results of this ATWS event simulation are shown in Figure 15.8-1. Feedwater pump trip is assumed to occur at the onset of the event. Upon the loss of the feedwater flow, reactor pressure, water level, and neutron flux begin to fall. Once reactor water level reaches low-low water level (L2), the protection system trips the recirculation pumps, initiates HPCS and RCIC and signals closure of main steam line isolation valves (MSIVs). Reactor pressure begins to rise due to closure of MSIVs. The relief valves begin to open due to reactor pressure increase. It is conservatively assumed the operator manually initiates SLC system 2 minutes after the ATWS setpoint has been reached.

15.8.2.3.4 Consideration of Uncertainties

Uncertainties in these analyses involve protection system setpoints, system capacities, and system response times. For ATWS transient analyses, best estimated values are used when possible. Examples of conservative bounding values which were used to cover uncertainties are as follows:

a. For conservatism, the analysis assumed the highest probable ATWS high-pressure trip setpoint, and

b. Boron injection is the later time of BIIT or 2 minutes following ATWS high-pressure trip.

15.8.2.4 Barrier Performance

The calculated peak vessel bottom head pressure is 1202 psig, which is below the American Society of Mechanical Engineers (ASME) Code Limit of 1375 psig for the RCPB and well below the ASME service level C of 1500 psig. The consequences of this event do not result in any temperature or pressure transient in excess of the criteria for which the fuel, pressure vessel, or containment are designed. Therefore, barrier integrity and function is maintained.

15.8.2.5 Radiological Consequences

While this event does not result in fuel failure it does result in the discharge of normal coolant activity to the suppression pool by means of SRV operation. Since this activity is contained in the primary containment, there will be no uncontrolled release to the environment.

15.8.3 LOSS OF ALTERNATE CURRENT POWER

This transient is bounded by the other transients analyzed in this section.

15.8.4 LOSS OF ELECTRICAL LOAD

This transient is bounded by assumptions in the GE licensing topical reports and the other transients analyzed in this section. (Reference 15.8-11)

15.8.5 LOSS OF CONDENSER VACUUM

This transient is bounded by assumptions in the GE licensing topical reports and the other transients analyzed in this section.

15.8.6 TURBINE TRIP

This event was analyzed at pre-power uprate condition for low power and full power (corresponding to 3323 MWt) operation. At uprated conditions, the event is bounded by the other transients analyzed in this section. The selection of critical events were guided by Reference 15.8-3.

15.8.7 CLOSURE OF MAIN STEAM LINE ISOLATION VALVES

15.8.7.1 Identification of Causes and Frequency Classification

15.8.7.1.1 Identification of Causes

Various steam line and nuclear system malfunctions, or operator actions, can initiate MSIV closure. These are detailed in Section 15.2.4. The MSIV closure event with failure to scram will initiate an ATWS event.

15.8.7.1.2 Frequency Classification

This event is of extremely low probability and is categorized as a limiting fault.

15.8.7.2 Sequence of Events and System Operation

15.8.7.2.1 Sequence of Events

Table 15.8-5 lists the sequence of events for Figure 15.8-2.

15.8.7.2.1.1 Identification of Operator Actions. For the simulation purpose, the following operator actions have been assumed:

a. Allow automatic operation of RCIC, inhibit HPCS consistent with Emergency Operating Procedures,

b. Begin boron injection at 2 minutes following ATWS high-pressure trip or at BIIT, whichever is later, and

c. Switch RHR to suppression pool cooling mode 11 minutes following initiation of the transient.

Emergency Operating Procedures provide operator actions for an ATWS event.

15.8.7.2.2 System Operation

For the MSIV closure ATWS event, a complete failure to scram is postulated to occur for all RPS scram signals. All other plant control systems maintain normal operation. The relief valves are all assumed to function at the specified setpoints. The RPT occurs at the ATWS high pressure trip setpoint. For this event, a complete failure of ARI is postulated. The operator must manually initiate SLC system to inject boron into the reactor vessel for reactor shutdown.

15.8.7.2.3 The Effect of Single Failures and Operator Errors

For the conservative assumption of failure of ARI system, the ATWS event is terminated by boron injection through operator activation of the SLC system. Relief valves operate to limit system pressure. All of these aspects are designed to single failure criterion. Analyses have been performed for dual and single SLC pump operation with natural of 44 atom percent Boron-10 enrichment, respectively. The single pump SLC transport time delay accounts for the reduced flow rate in the system.

15.8.7.3 Core and System Performance

15.8.7.3.1 Mathematical Model

References 15.8-8, 15.8-11 and 15.8-12 describes the generic evaluation methodology for the ATWS event under MELLLA conditions.

15.8.7.3.2 Input Parameters and Initial Conditions

The initial operating conditions and equipment performance characteristics are given in Table 15.8-1A. The ATWS high pressure setpoint was set at the upper analytical limit. The SRV setpoints were set using a statistical spread of the analytical setpoint limits for the first opening of each value and reset to a statistical spread of the nominal setpoints for all remaining SRV openings during the transient event.

15.8.7.3.3 Results

The results of this ATWS event simulation are shown in Table 15.8-3 and Figure 15.8-2. The MSIVs close within a nominal 4 sec stroke time. Once the MSIVs reach the 85% open position, a reactor scram is initiated. The scram was assumed to fail to insert any control rods. The rapid increase in reactor pressure generates rapid increase in reactor core power due to collapsing core voids. The relief valves begin to open responding to reactor pressure rise. Upon reaching the ATWS high-pressure setpoint, the RPT occurs and reduces core power. It is conservatively assumed the operator manually initiates SLC system 2 minutes after the ATWS setpoint has been reached.

The peak calculated vessel bottom head pressure is below the ASME Service Level C limit of 1500 psig.

The calculated peak suppression pool temperature of the event is below the containment design limit. The calculated peak containment pressure is also below the containment design limit.

15.8.7.3.4 Consideration of Uncertainties

Uncertainties in these analyses involve protection system setpoints, system capacities, and system response times. For ATWS transient analyses, best estimated values are used when possible. Examples of conservative bounding values which were used to cover uncertainties are as follows:

a. For conservatism, the analyses assumed the highest probable ATWS high-pressure trip setpoint, and

b. Boron injection is the later time of BIIT or 2 minutes following ATWS high-pressure trip.

c. A 35 sec opening time for the suction values upstream to the SLCS pumps was modeled increasing the SLCS initiation time.

15.8.7.4 Barrier Performance

The calculated peak vessel bottom head pressure is below the ASME Service Level C limit of 1500 psig. The consequences of this event do not result in any temperature or pressure transient in excess of the criteria for which the fuel, pressure vessel, or containments are designed. Therefore, these barrier integrity and function is maintained.

15.8.7.5 Radiological Consequences

While this event does not result in fuel failure it does result in the discharge of normal coolant activity to the suppression pool by means of SRV operation. Since this activity is contained in the primary containment, there will be no uncontrolled release to the environment.

15.8.8 INADVERTENT OPENING OF RELIEF VALVE

15.8.8.1 Identification of Causes and Frequency Classification

15.8.8.1.1 Identification of Causes

This event assumes that a SRV may "open" and stick in the "open" position. These events are detailed in Section 15.1.4. The inadvertent opening of relief valve (IORV) event with failure to scram will initiate an ATWS event.

15.8.8.1.2 Frequency Classification

This event is of extremely low probability and is categorized as a limiting fault.

15.8.8.2 Sequence of Events and System Operation

15.8.8.2.1 Sequence of Events

The analysis has not been updated for the change in MSIV isolation setpoint from Level 2 to Level 1 because the analysis is bounding and conclusions of the analysis are not affected (Reference 15.8-9).

Table 15.8-7 lists the sequence of events for Figure 15.8-4.

15.8.8.2.1.1 Identification of Operator Actions. For the simulation purpose, the following operator actions have been assumed:

a. Initiate boron injection 2 minutes after BIIT,
b. Disable HPCS, RCIC, and low level MSIV closure,
c. Use feedwater to manually control the water level at the top of active fuel, and
d. Manually trip the recirculation pumps.

15.8.8.2.1.2 System Operation. For the IORV ATWS event, a complete failure to scram is postulated to occur for all RPS scram signals. All other plant control systems maintain normal operation. For this event, a complete failure of ARI is also postulated. The operator must manually initiate SLC system to inject boron into the reactor vessel for reactor shutdown.

15.8.8.2.2 The Effect of Single Failures and Operator Errors

For the conservative assumption of failure of ARI system, the ATWS event is terminated by boron injection through operator activation of the SLC system. This is a multiple equipment failure event. All of these aspects are designed to single failure criterion.

The instrumentation, which detects and audibly alarms the resulting suppression pool temperature rise, and the RHR containment heat removal system are designed to meet the single failure criteria. The operator must, however, manually initiate suppression pool cooling.

15.8.8.3 Core and System Performance

15.8.8.3.1 Mathematical Model

Reference 15.8-7 describes the generic evaluation methodology for the ATWS event evaluated at uprated power conditions. Additional plant specific analyses were performed for a bounding 10% power uprate using the same methodology.

15.8.8.3.2 Input Parameters and Initial Conditions

The initial operating conditions and equipment performance characteristics are given in Tables 15.8-1 and 15.8-2, respectively. The HPCS/RCIC flow rates are conservatively high and water level setpoints represent nominal values. The ATWS high pressure setpoint was set at the upper analytical limit. The SRV setpoints were set using a statistical spread of the analytical setpoint limits for the first opening of each value and reset to a statistical spread of the nominal setpoints for all remaining SRV openings during the transient event.

15.8.8.3.3 Results

The results of this ATWS event simulation are shown in Figure 15.8-4. The opening of a SRV allow steam to be discharged into the suppression pool. The sudden increase in the rate of steam flow leaving the reactor vessel causes a mild depressurization transient.

Discharge of steam into the suppression pool increases the suppression pool temperature. The operator initiates SLC system 2 minutes after the suppression pool temperature reaches 110°F, trips the recirculation pumps, and initiates feedwater runback to lower the reactor water level to top of active fuel (TAF). Suppression pool cooling begins 11 minutes after the initiation of the event. The operator disables HPCS and RCIC level 2 initiation. The MSIV Level 2 closure is also disabled. Turbine steam flow is terminated upon closure of the MSIVs due to low steam line pressure.

15.8.8.3.4 Consideration of Uncertainties

Uncertainties in these analyses involve protection system setpoints, system capacities, and system response times. For ATWS transient analyses, best estimated values are used when possible. Examples of conservative bounding values which were used to cover uncertainties are as follows:

a. For conservatism, the analysis assumed the highest probable ATWS high-pressure trip setpoint, and

b. Boron injection is the later time of BIIT or 2 minutes following ATWS high-pressure trip.

15.8.8.4 Barrier Performance

The IORV ATWS event is a mild depressurization which has no significant effect on RCPB. During the event, the suppression pool is continually heated due to SRV discharge. The peak suppression pool temperature and pressure are within the design criteria of the containment.

15.8.8.5 Radiological Consequences

While this event does not result in fuel failure, it does result in the discharge of normal coolant activity to the suppression pool by means of SRV operation. Since this activity is contained in the primary containment, there will be no uncontrolled release to the environment.

15.8.9 PRESSURE REGULATOR FAILURE - OPEN (PREGO)

15.8.9.1 Identification of Causes and Frequency Classification

15.8.9.1.1 Identification of Causes

The causes for this event is detailed in Section 15.1.3. The PREGO event with failure to scram will initiate an ATWS event.

15.8.9.1.2 Frequency Classification

This event is of extremely low probability and is categorized as a limiting fault.

15.8.9.2 Sequence of Events and System Operation

15.8.9.2.1 Sequence of Events

Table 15.8-8 lists the sequence of events for Figure 15.8-5.

15.8.9.2.1.1 Identification of Operator Actions. For the simulation purpose, the following operator actions have been assumed.

a. Allow automatic operation of RCIC, inhibit HPCs consistent with Emergency Operating Procedures,

b. Begin boron injection at 2 minutes following ATWS high-pressure trip or at BIIT, whichever is later, and

c. Switch RHR to suppression pool cooling mode 11 minutes following initiation of the transient.

The emergency operating procedures provide operator actions for an ATWS event.

15.8.9.2.1.2 System Operation. For the PREGO ATWS event, a complete failure to scram is postulated to occur for all RPS scram signals. All other plant control systems maintain normal operation. For this event, a complete failure of ARI is also postulated. The operator must manually initiate SLC system to inject boron into the reactor vessel for reactor shutdown.

15.8.9.2.3 The Effect of Single Failures and Operator Errors

For the conservative assumption of failure of ARI system, the ATWS event is terminated by boron injection through operator activation of the SLC system. This is a multiple equipment failure event. All of these aspects are designed to single failure criterion.

The instrumentation, which detects and audibly alarms the resulting suppression pool temperature rise, and the RHR containment heat removal system are designed to meet the single failure criteria.

15.8.9.3 Core and System Performance

15.8.9.3.1 Mathematical Model

References 15.8-8, 15.8-11 and 15.8-12 describe the generic evaluation methodology for the ATWS event under MELLLA conditions.

15.8.9.3.2 Input Parameters and Initial Conditions

The initial operating conditions an equipment performance characteristics are given in Table 15.8-1A. The ATWS high pressure setpoint was set at the upper analytical limit. The SRV setpoints were set using a statistical spread of the analytical setpoint limits for the first opening of each value and reset to a statistical spread of the nominal setpoints for all remaining SRV openings during the transient event.

15.8.9.3.3 Results

The results of this ATWS event simulation are shown in Table 15.8-3 and Figure 15.8-5. The DEH control system failure with 130% steam flow demand signal is assumed to occur. Ensuing reactor depressurization results in formation of voids in the reactor coolant and causes a decrease in reactor power almost immediately. The MSIV closure occurs due to trip signal from low steam line pressure. Reactor pressure rises to the relief setpoints and the recirculation pumps trip on the high pressure ATWS setpoint.

Discharge of steam into the suppression pool increases the suppression pool temperature. The operator initiates feedwater runback to lower the reactor water level to TAF after the suppression pool temperature reaches 110°F. The HPCS and RCIC systems are initiated at low reactor water level. The SLC system is manually initiated 2 minutes after the ATWS high pressure setpoint was reached.

15.8.9.3.4 Consideration of Uncertainties

Uncertainties in these analyses involve protection system setpoints, system capacities, and system response times. For ATWS transient analyses, best estimated values are used when possible. Examples of conservative bounding values which were used to cover uncertainties are as follows:

a. For conservatism, the analysis assumed the highest probable ATWS high-pressure trip setpoint, and

b. Boron injection is the later time of BIIT or 2 minutes following ATWS high-pressure trip.

15.8.9.4 Barrier Performance

The calculated peak vessel bottom head pressure is below the ASME Service Level C limit of 1500 psig. The consequences of this event do not result in any temperature or pressure transient in excess of the criteria for which the fuel pressure vessel or containment are designed. Therefore, barrier integrity and function is maintained.

15.8.9.5 Radiological Consequences

While this event does not result in fuel failure, it does result in the discharge of normal coolant activity to the suppression pool by means of SRV operation. Since this activity is contained in the primary containment, there will be no uncontrolled release to the environment.

15.8.10 SINGLE REACTOR RECIRCULATION SYSTEM PUMP OPERATION

The following discussion is based on pre-uprate power level of 3323 MWt. Thus, the 100% rod line corresponds to 3323 MWt power at rated core flow.

For pre-uprate condition, it was shown that operation of the plant with only a single RRC pump and the resulting transient conditions which could occur while in this mode are bounded by the other transients analyzed in this section, and the parametric studies performed in Reference 15.8-4. This conclusion was based on evaluating the effects of power, void reactivity worth and doppler worth at both 100% conditions, and at conditions present under single RRC pump operation.

Sensitivity studies presented in Reference 15.8-4 compare the turbine trip at 100% power condition with the turbine trip at lower power conditions, such as one would have under single RRC pump.

The rod line for single RRC pump operation for pre-uprate condition was normally maintained between 100% and 104.25% power level. At less than 100% power the average void in the core was slightly higher for operation on the 104.25% rod line than for operation on the 100% rod line. In addition, the doppler worth at lower power conditions is higher than at 100% power. The presence of higher voids and the increased doppler worth when operating at the 104.15% rod line is bounded by the parametric analyses in Reference 15.8-4. These parametric analyses determined the sensitivity of plant response between the MSIV closure at 100% power and the MSIV closure with higher reactivity coefficients at 100% power. The void worth assumed in the higher reactivity coefficient case gives a much higher effect than the increased average void present in the single RRC pump operation mode at the 104.25% rod line, which bounds this case. The doppler reactivity worth used in the MSIV closure with higher reactivity coefficients is representative of the doppler reactivity worth found at lower power conditions such as those present in the single RRC pump operation mode.

15.8.11 REFERENCES

15.8-1 Hatch Unit 1 FSAR. Amendment 10, Appendix L, "Failure-to-Scram Analysis," October 27, 1971.

15.8-2 Michelotti, L. A., "Analysis of Anticipated Transients Without Scram," NEDO-10349.

15.8-3 NEDE-24222, "Assessment of BWR Mitigation of ATWS, Volume II (NUREG-0460 Alternate No. 3)."

15.8-4 EI International, Inc., "Final Report, Anticipated Transients Without Scram Analysis for the WNP-2 Nuclear Power Plant," SA-JAD-087-90, December 1989.

15.8-5 Supply System Letter G02-90-116, G. C. Sorensen (Supply System) to NRC, "Nuclear Plant No. 2. Operating License (NPF-21 Resolution of Anticipated Transient Without Scram (ATWS) for WNP- 2," dated June 29, 1990.

15.8-6 GE Nuclear Energy, "WNP-2 Power Uprate Project NSSS Engineering Report," GE-NE-208-17-0993, Revision 1, December 1994.

15.8-7 GE Nuclear Energy, "Generic Evaluations of General Electric Boiling Water Reactor Power Uprate," Licensing Topical Report NEDC-31984P, July 1991 and Supplements 1 & 2.

15.8-8 "Generic Guidelines for General Electric Boiling Water Reactor Extended Power Uprate," NEDC-32424P-A, February 1999 (ELTR-1).

15.8-9 GE Hitachi Nuclear Energy, "License Amendment Request for Proposed Changes to Columbia Technical Specifications: Changing Group 1 Isolation Valves' Low Reactor Water Level Isolation Signal from the Current Level 2 to Level 1," 0000-0081-6730-R1, July 2008.

15.8-10 "Generic Evaluations of General Electric Boiling Water Reactor Extended Power Uprate," NEDC-32523P-A, February 2000 (ELTR-2) and Supplement 1, Volume 1, February 1999 and Volume II, April 1999.

15.8-11 "Constant Pressure Power Uprate," NEDC-33004P-A, Revision 4, July 2003.15.8-12"Project Task Report ENERGY NORTHWEST Columbia Generating Station ARTS/MELLLA Task T0902: Anticipated Transients Without Scram," 0000-0101-1095-R2, May 2010.

15.8-13 002N3439, GNF2 Fuel Design Cycle-Independent Analyses for Energy Northwest Columbia Generating Station, (most recent version referenced in the COLR).

15.8-14 GE-Hitachi Nuclear Energy, "Safety Analysis Report for Columbia Generating Station Thermal Power Optimization," NEDC-33853P, March 2016.

Table 15.8-1

Anticipated Transients Without Scram Analysis
Initial Conditions

Parameters	Value
Reactor dome pressure (psig)	1020
Vessel core flow (Mlb/hr)	108.5
Vessel steam flow (Mlb/hr)	15.728
Reactor thermal power (MWt)	3629
Initial vessel and recirculation piping inventory (lbm)	609,600
Narrow range sensed initial water level (ft above separator skirt)	4.13
Initial core average void fraction (%)	41.8
Void reactivity coefficient (¢/%)	-12.937
Doppler coefficient (%/F)	-0.31087
Feedwater enthalpy (Btu/lb)	403.1
Sodium penetaborate solution concentration (% by weight)	13.6
Suppression pool liquid volume (ft^3)	112,197
Suppression pool temperature (°F)	90
Service water temperature (°F)	90

Table 15.8-1A

Anticipated Transients Without Scram Analysis for MELLLA
Initial Conditions and Equipment Performance Characteristics

Parameter	Value
Dome Pressure (psia)	1035
MELLLA Core Flow (Mlbm/br / % rated)	87.6 / 80.7
Core Thermal Power (MWt / %CLTP)	3486 / 100.0
Steam / Feed Flow (Mlbm/hr / %NBR)	15.013 / 100
Sodium Pentaborate Solution Concentration in the SLCS Storage Tank (% by weight)	13.6
Boron 10 Enrichment (atom %)	19.8*
SLCS Injection Location	HPCS
Number of SLCS Pumps Operating	2
SLCS Injection Rate (gpm)	82.4*
SLCS Liquid Transport Time (sec)	321
Initial Suppression Pool Liquid Volume (ft^3)	112197
Initial Suppression Pool Temperature (°F)	90
RHR Heat Exchanger Design Effectiveness per Loop (BTU/sec°F)	289
Number of RHR Heat Exchanger Loops	2
RHR Heat Exchanger Design Effectiveness during LOOP (BTU/sec°F)	289
Number of RHR Heat Exchanger Loops Available for LOOP Event	2
RHR Service Water Temperature (°F)	90
Transient time at which the RHR suppression pool cooling is established (seconds)	660
High Dome Pressure ATWS-RPT Setpoint (psig)	1170
SRV Capacity — per valve (lbm/hr) / Reference Pressure (psig) / Accumulation (%)	876500/ 1165 / 3
SRV Configuration	18 SRV (4 OOS)

* Values for two SLC pumps injection. For single pump injection, flow rate is 41.2 gpm and Boron-10 enrichment is 44 atom %.

Table 15.8-2

Anticipated Transients Without Scram Analysis
Equipment Performance Characteristics

Parameter	Value
Main steam line isolation valve nominal closure time (sec)	4
Relief valve system capacity (%NBR steam flow at 1144 psia)	93.7
Number of SRVs	18
Relief valve and sensor time delay (sec)	0.4
Relief valve opening time (sec)	0.15
Relief valve closure time delay (sec)	0.3
Standby liquid control system injection rate (gpm)	86.0
Boron Injection Initiation Temperature (BIIT, Suppression Pool Temperature) (°F)	110
High-pressure core spray/RCIC low water level initiation nominal setpoint (ft above separator skirt)	-3.04 (L2)
High-pressure core spray/RCIC high water level shutoff setpoint (ft above separator skirt)	5.667 (L8)
High-pressure core spray flow rate (gpm at 1035 psia)	3875
Reactor core isolation cooling flow rate (gpm)	600
Anticipated transients without scram high pressure UAL setpoint (psia)	1186
Anticipated transients without scram dome pressure sensor and logic time delay (sec)	0.53
Total bypass capacity (Mlb/hr)	3.565
Total bypass capacity (% of uprate steam flow)	22.3*
Pump inertia constant (sec)	5.4729
Residual heat removal pool cooling capacity (Btu/sec-°F)	578

*23.3 for MELLLA

Table 15.8-3

Summary of Anticipated Transients
Without Scram Results

Parameter	ATWS Event			
	PREGO[d]	MSIVC[d]	LOFW	IORV
Maximum neutron flux (%)	292.1[d]	261	277.45	114.7
Time (sec)	19.2	4.1	22.36	7.96
Maximum average fuel heat flux (%)	150	136	101.2	101.45
Time (sec)	22.6	5	0.49	0.69
Maximum bottom pressure (psig)	1364[d]	1349	1202.2	1061.4
Time (sec)	28.7	9.9	23.62	0.19
Peak suppression pool temperature (°F)	178.9	179.6[c]	161.06	165.29
Peak containment pressure (psig)	9.6	9.8[c]	5.97	6.87
Time (sec)	3146	3056	8400	6600
Peak cladding temperature (°F)	1572	N/A	N/A	N/A
Time (sec)[b]				
Min. water level (ft above sep. skirt)[b]			-11.24	-10.66
Time (sec)[b]			91.38	975.4
Time of hot shutdown[a] (sec)	895	898	977	1524.6
Time of reaching ATWS setpoint (sec)	22.1	4.4	17.5	N/A
Time of BIIT (sec)	64	47	170	554

[a] Hot shutdown is defined as generated power remaining below 1% NBR. For MELLLA, hot shutdown is defined as Neutron Flux remains < 0.1%.

[b] Values not reported for MELLLA.

[c] Results for two SLC pump operation. For single pump operation, suppression pool temperature is 187°F and containment pressure is 12 psig.

[d] Noted parameters for PREGO are beginning of Cycle 20 under MELLLA conditions. All other PREGO and MSIVC results are end of Cycle 20.

Table 15.8-4

Sequence of Events for Loss of Feedwater

Time	Event
0 sec	Feedwater pump trip.
17.5 sec	High-pressure core spray and RCIC initiated on Level 2.
17.5 sec	Main steam line isolation valve closure on Level 2 (see Section 15.8.2.3.2) - scram fails.
17.5 sec	Recirculation pump tripped on Level 2 (ATWS setpoint reached, ARI fails).
22.9 sec	Relief valves lift.
23.6 sec	Vessel pressure peaks.
2 minutes 18 sec	Operator initiates SLCS (2 minutes after ATWS setpoint reached).
3 minutes 3 sec	Liquid control flow enters the core.
16 minutes	Hot shutdown achieved.
140 minutes	Suppression pool temperature and containment pressure peak.

Table 15.8-5

Sequence of Events for Main Steam Line
Isolation Valve Closure
(Long Term Transient)

Event	EOC MELLLA (sec)
MSIV Isolation Initiated	0.0
MSIVs Fully Closed	4.0
High Pressure ATWS Setpoint	4.4
Peak Neutron Flux	4.1
Opening of the First Relief Valve	4.6
Recirculation Pumps Trip	4.9
Peak Heat Flux	5.0
Peak Vessel Pressure	9.9
Feedwater Reduction Initiated	30.0
BIIT Reached	47.0
SLCS Pumps Start	124
Hot Shutdown Achieved (Neutron Flux Remains $<0.1\%$)	898
RHR Cooling established	660
Peak Suppression Pool Temperature	3056

Table 15.8-6

DELETED

Table 15.8-7

Sequence of Events for Inadvertent Open Relief Valve

Time	Event
0 sec	Relief valve with the lowest opening setpoint opens.
9 minutes 14 sec	Operator initiates SLCS 2 minutes after suppression pool temperature = 110°F (scram and ARI fail).
9 minutes 14 sec	Operator trips recirculation pumps.
9 minutes 14 sec	Operator initiates feedwater runback to bring level to TAF.
11 minutes	Suppression pool cooling begins.
13 minutes	Operator disables HPCS, RCIC Level 2 initiation and MSIV Level 2 closure[a].
14 minutes	Liquid control flow enters the core.
25 minutes	Hot shutdown achieved.
29 minutes	Main steam line isolation valve closure on low pressure.
110 minutes	Suppression pool temperature and containment pressure peak.

[a] The analysis has not been updated for the change in MSIV isolation setpoint from Level 2 to Level 1 because the analysis is bounding and conclusions of the analysis are not affected (Reference 15.8-9).

Table 15.8-8

Sequence of Events for Pressure Regulator Failure Open (Long Term Transient)

Event	BOC MELLLA (sec)	EOC MELLLA (sec)
TCV and Bypass Valves Start Open	0.1	0.1
MSIV Closure Initiated by Low Steamline Pressure	15.0	14.2
MSIVs Fully Closed	19.0	18.2
Peak Neutron Flux	19.2	18.4
High Pressure ATWS Setpoint	22.6	22.1
Opening of the First Relief Valve	22.8	22.2
Recirculation Pumps Trip	23.2	22.6
Peak Heat Flux	23.2	22.6
Peak Vessel Pressure	28.7	27.9
Feedwater Reduction Initiated	45.8	45.8
BIIT Reached	64.0	64.0

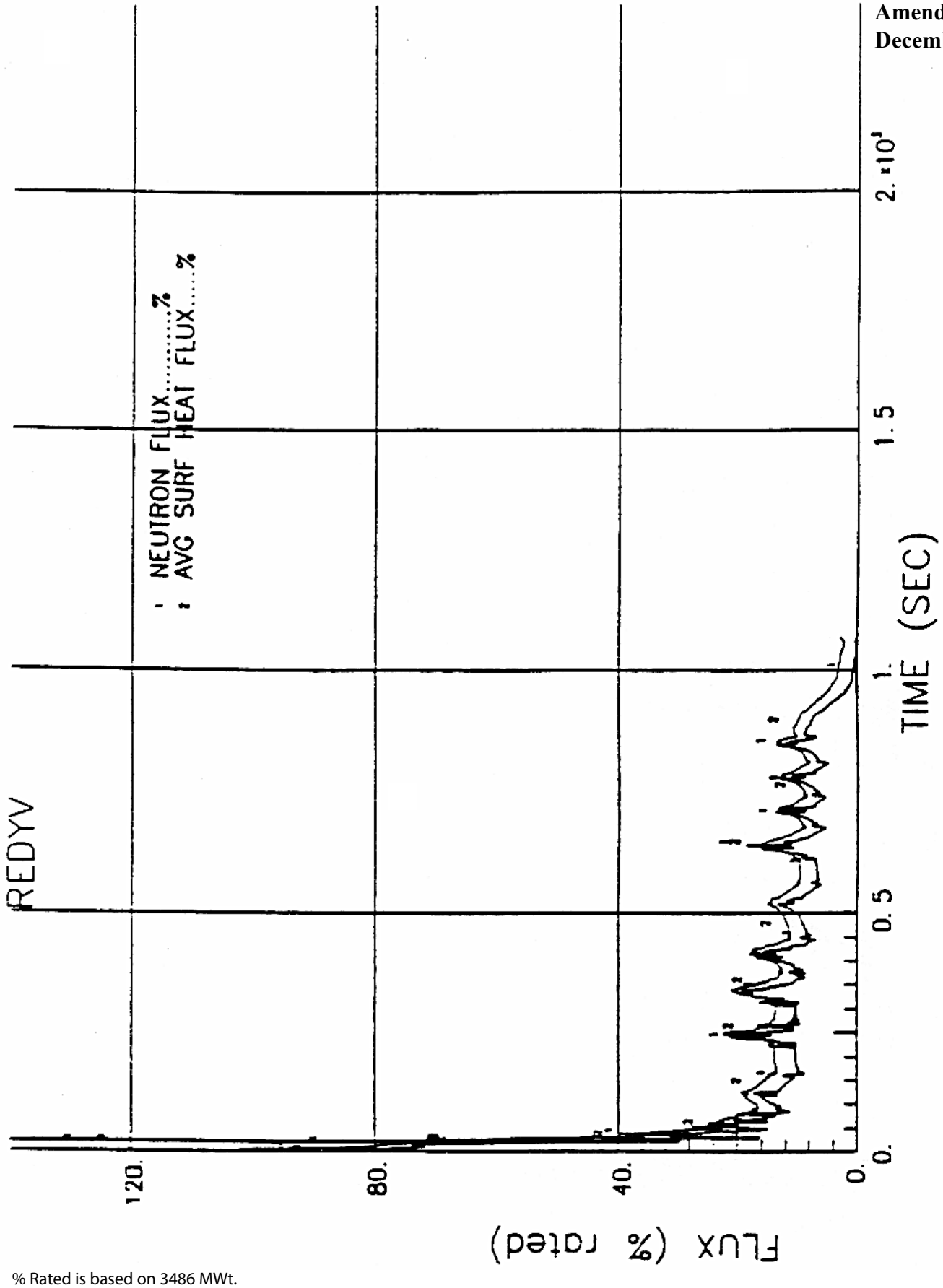

% Rated is based on 3486 MWt.

Columbia Generating Station Final Safety Analysis Report	Loss of Feedwater Event		
	Draw. No. 020002.29	Rev.	Figure 15.8-1.1

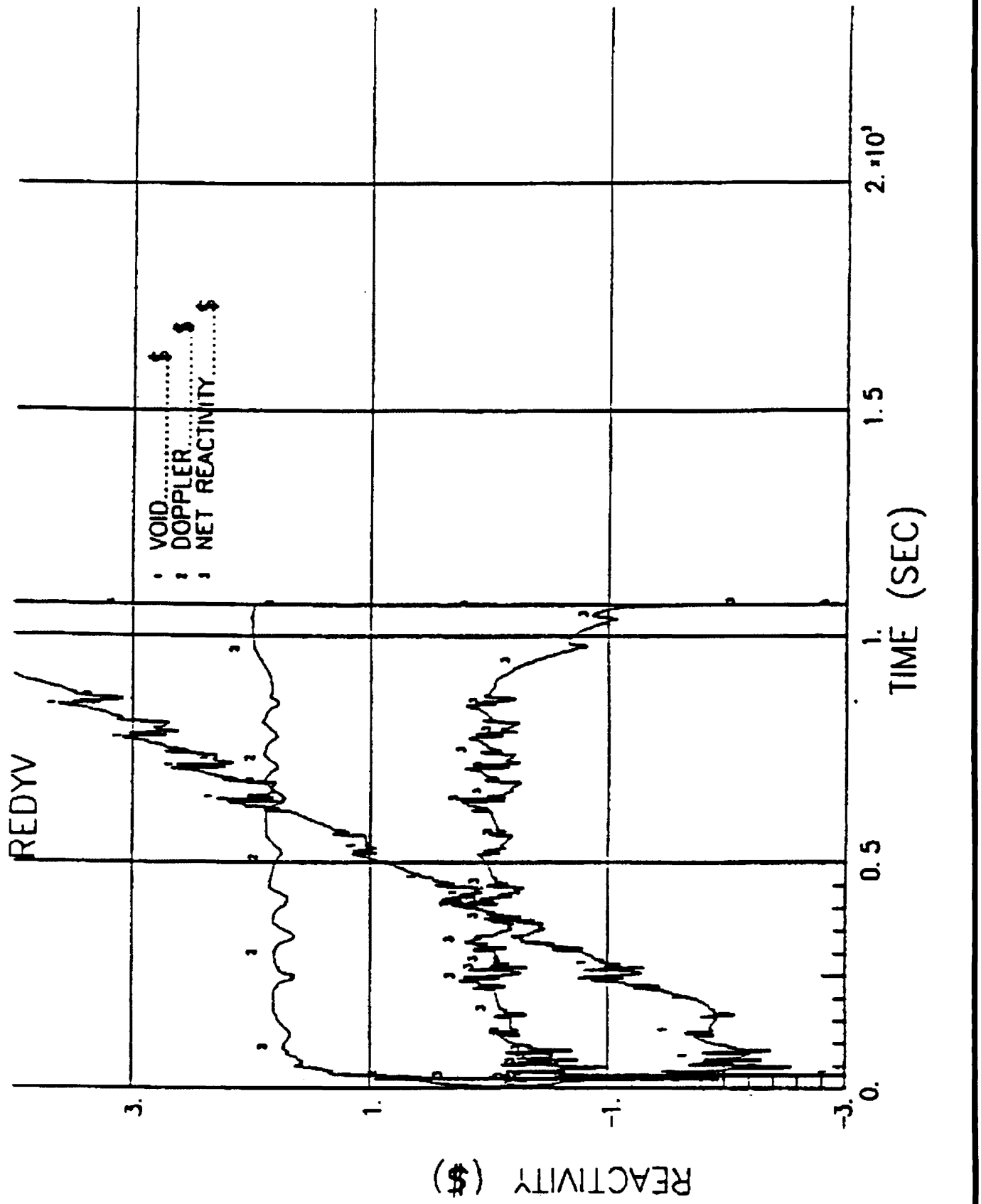

Columbia Generating Station **Final Safety Analysis Report**	**Loss of Feedwater Event**		
	Draw. No. 020002.30	Rev.	Figure 15.8-1.2

Form No. 960690

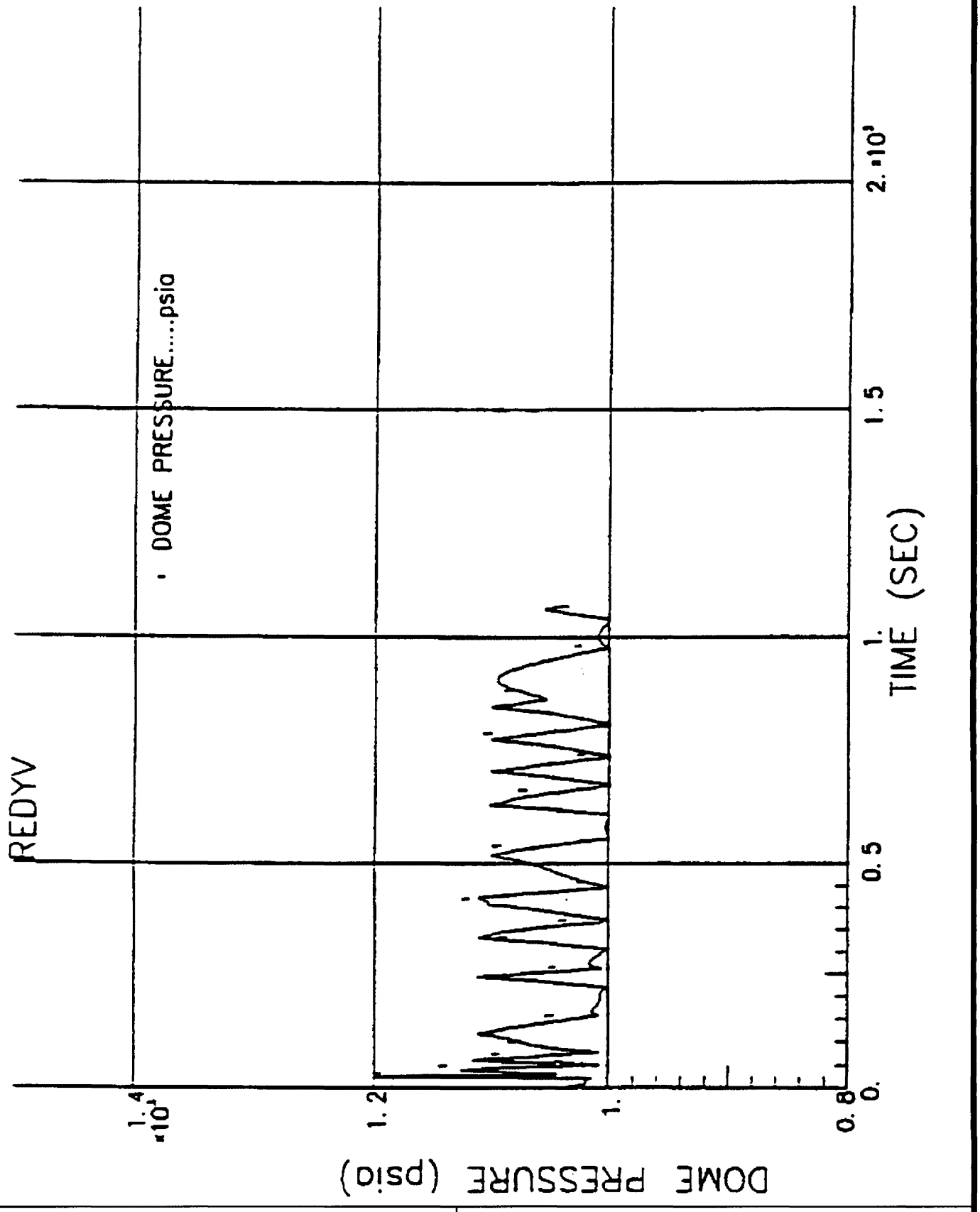

Columbia Generating Station **Final Safety Analysis Report**	**Loss of Feedwater Event**		
	Draw. No. 020002.31	Rev.	Figure 15.8-1.3

Form No. 960690

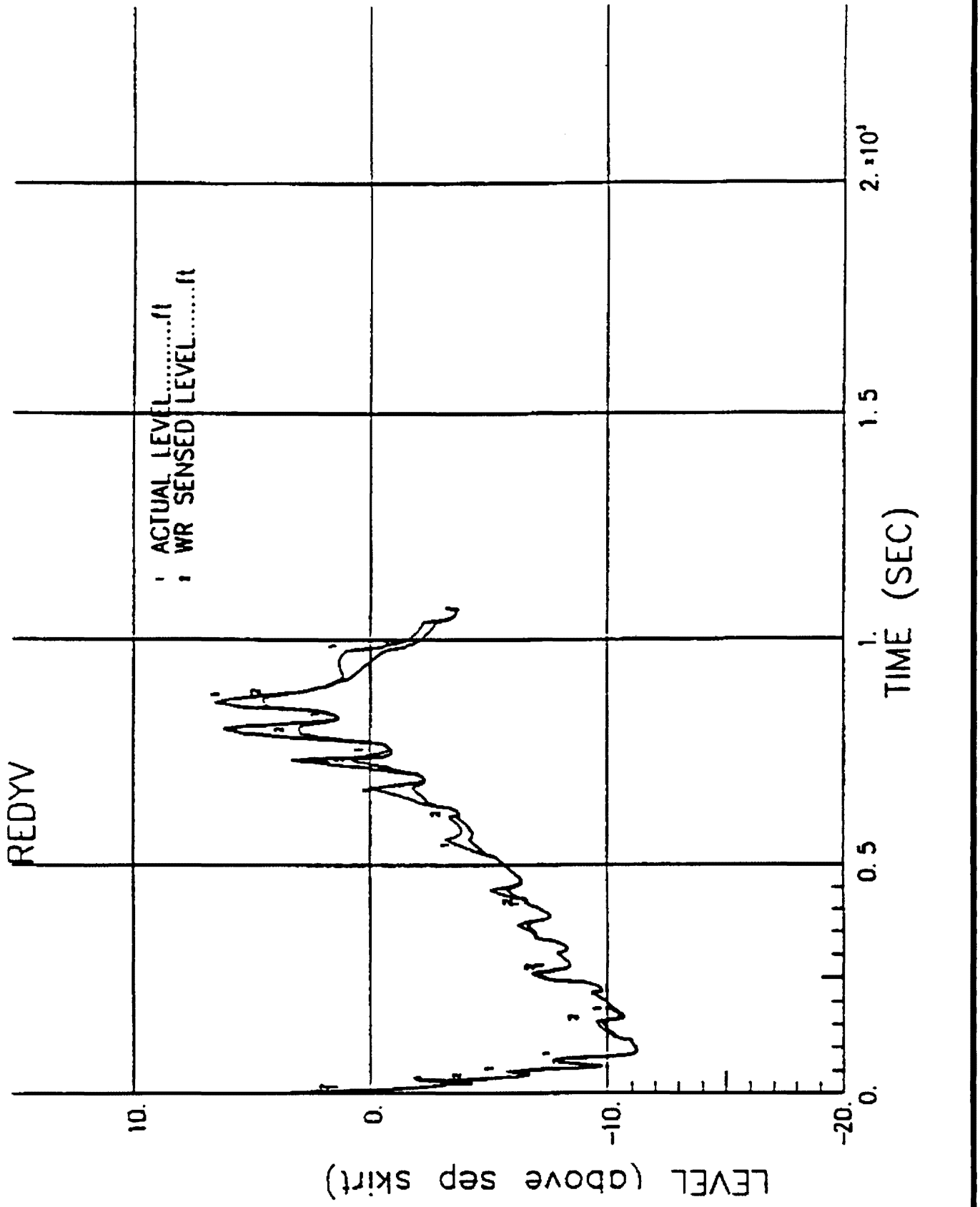

Columbia Generating Station **Final Safety Analysis Report**	**Loss of Feedwater Event**		
	Draw. No. 020002.32	Rev.	Figure 15.8-1.4

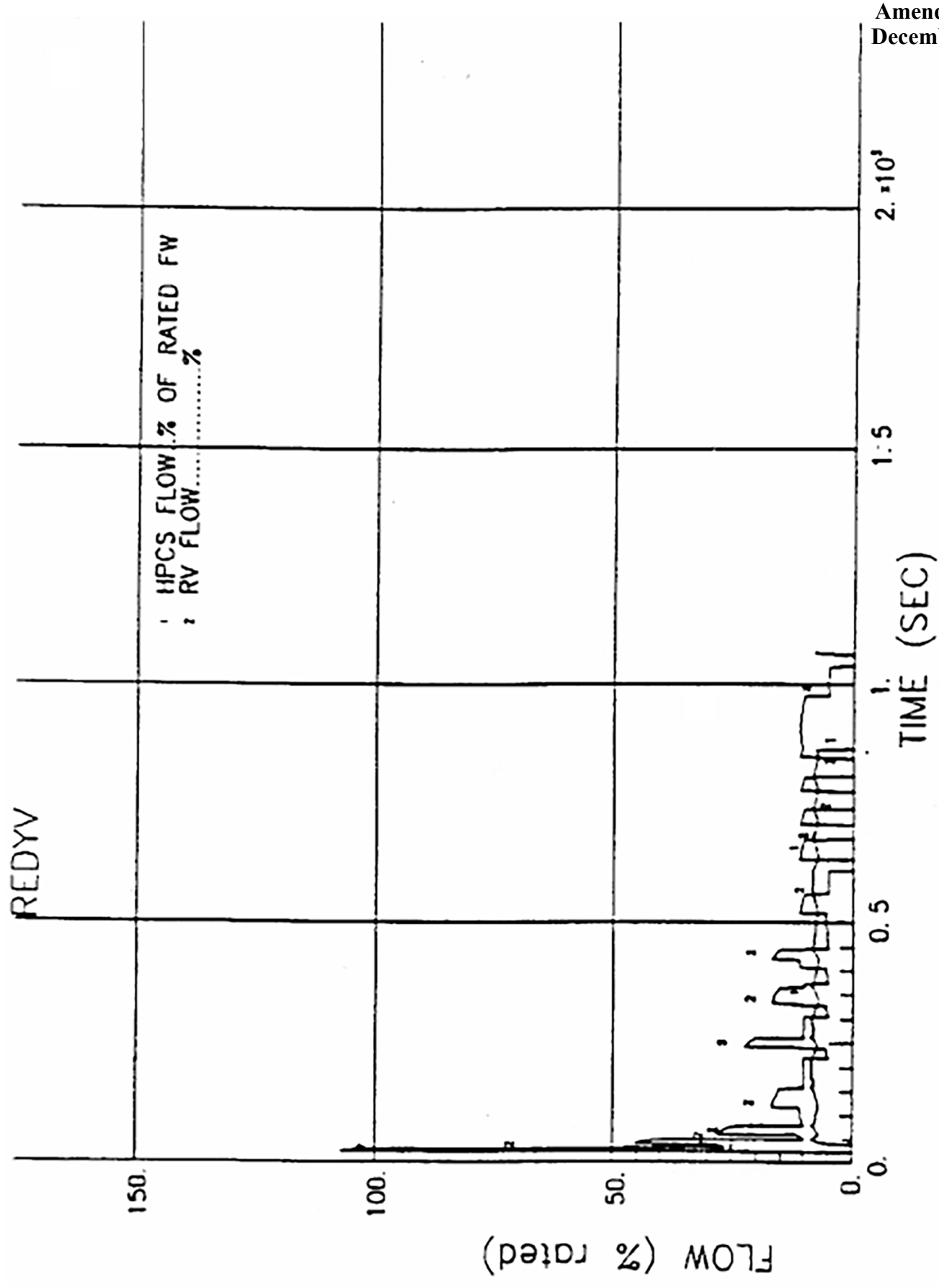

% rated is based on 3486 MWt.

Columbia Generating Station Final Safety Analysis Report	Loss of Feedwater Event		
	Draw. No. 020002.33	Rev.	Figure 15.8-1.5

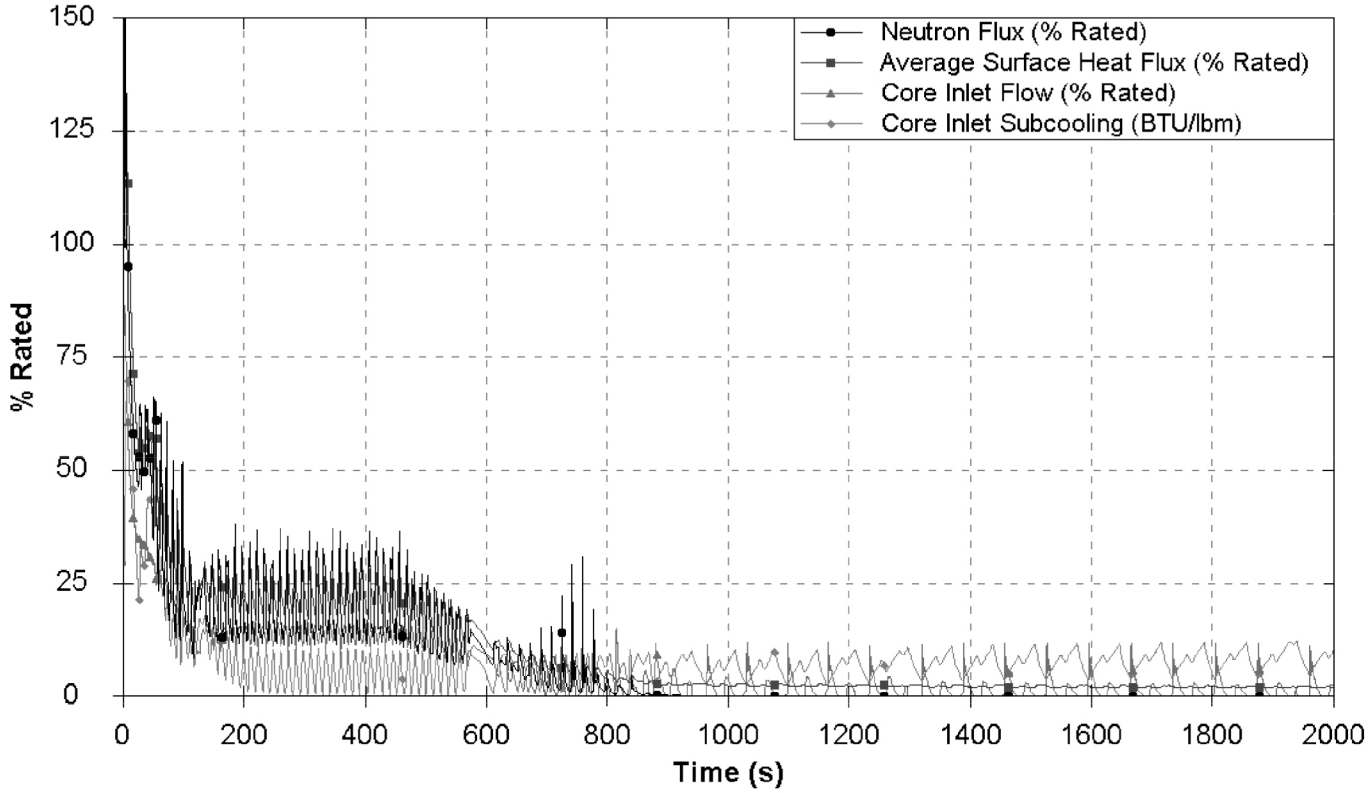

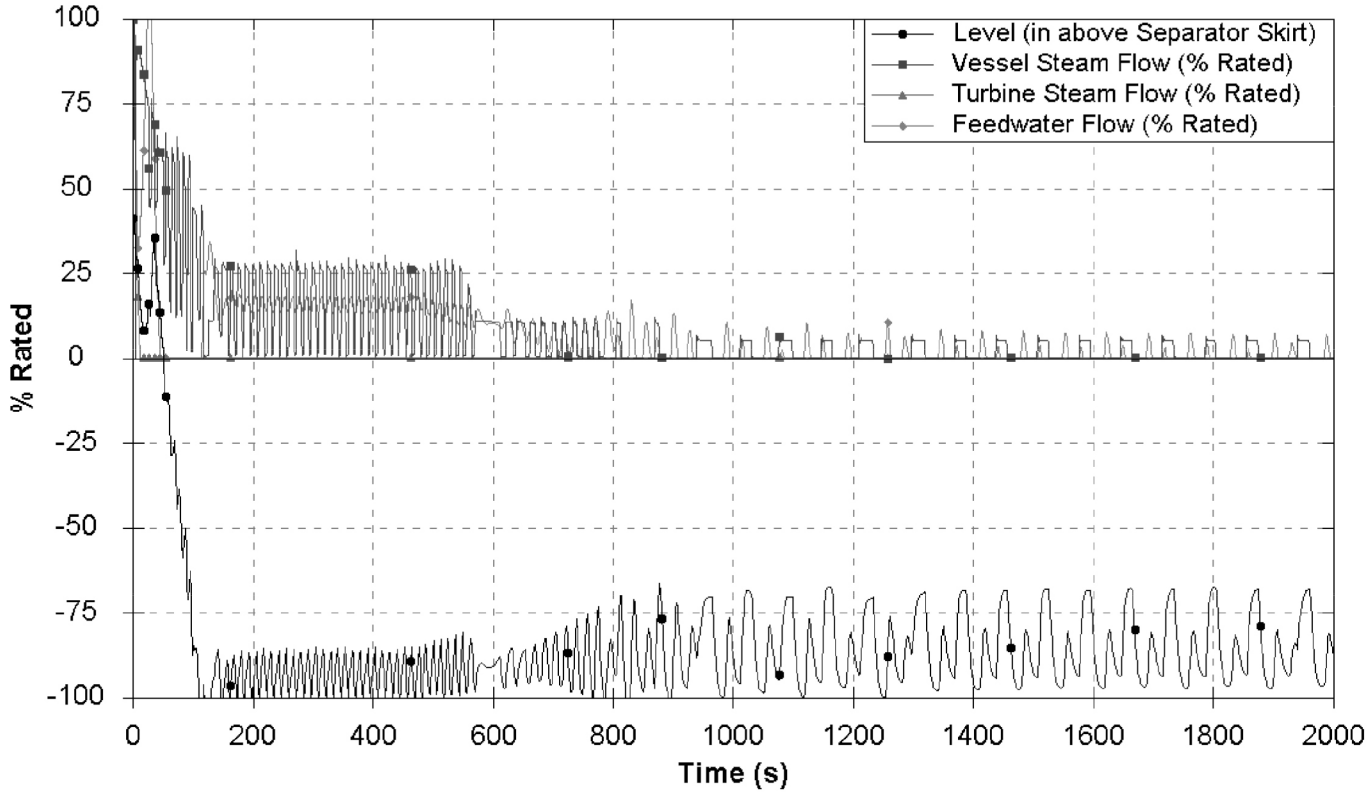

% Rated is based on 3486 MWt.

Columbia Generating Station **Final Safety Analysis Report**	**Main Steam Isolation Valve Closure Event**		
	Draw. No. 020002.34	**Rev.1**	**Figure 15.8-2.1**

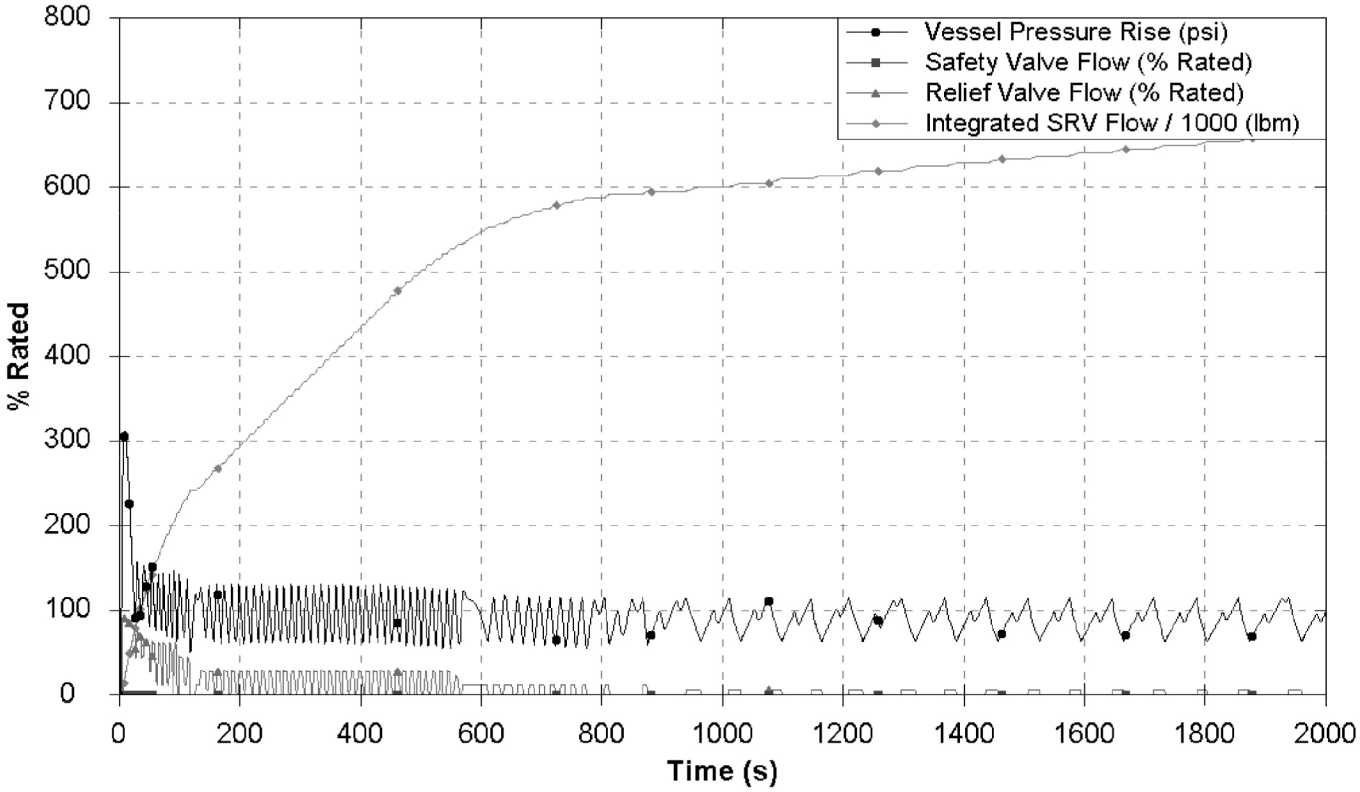

% Rated is based on 3486 MWt.

Columbia Generating Station **Final Safety Analysis Report**	**Main Steam Isolation Valve Closure Event**		
	Draw. No. 020002.35	**Rev. 1**	**Figure 15.8-2.2**

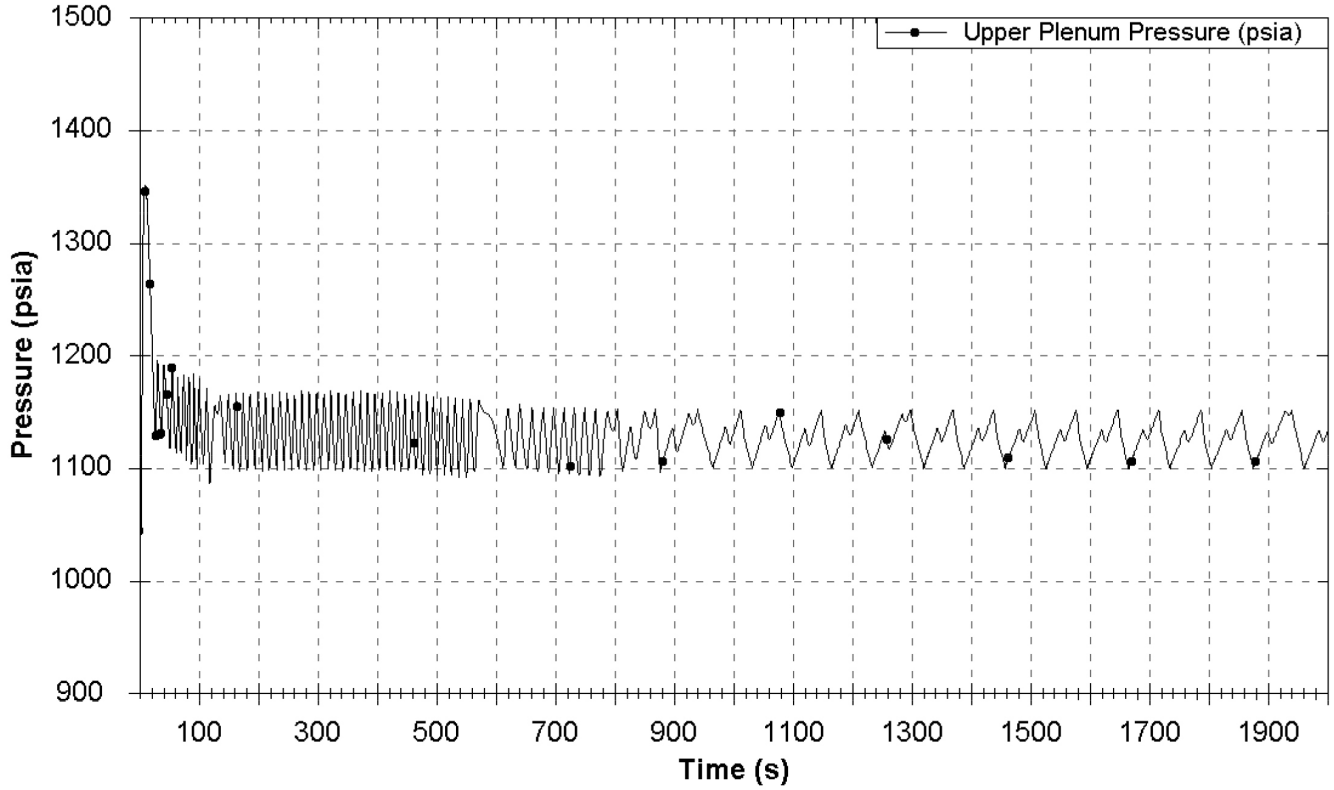

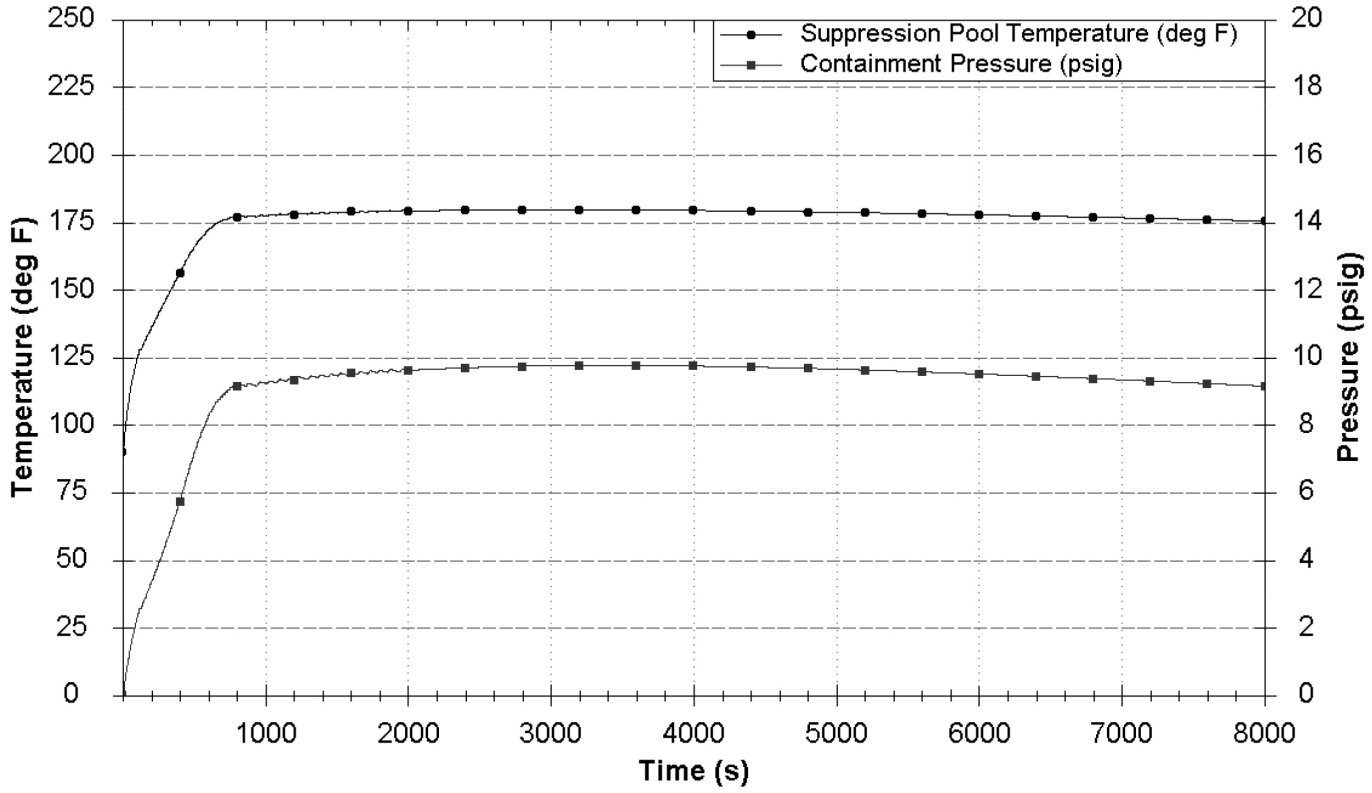

Columbia Generating Station Final Safety Analysis Report	**Main Steam Isolation Valve Closure Event**		
	Draw. No. 020002.36	Rev. 1	Figure 15.8-2.3

DELETED

DELETED

DELETED

DELETED

DELETED

DELETED

Columbia Generating Station Final Safety Analysis Report	Main Steam Isolation Valve Closure Event with 4 SRVs Out-of-Service		
	Draw. No. 960222.43	Rev.	Figure 15.8-3.4

DELETED

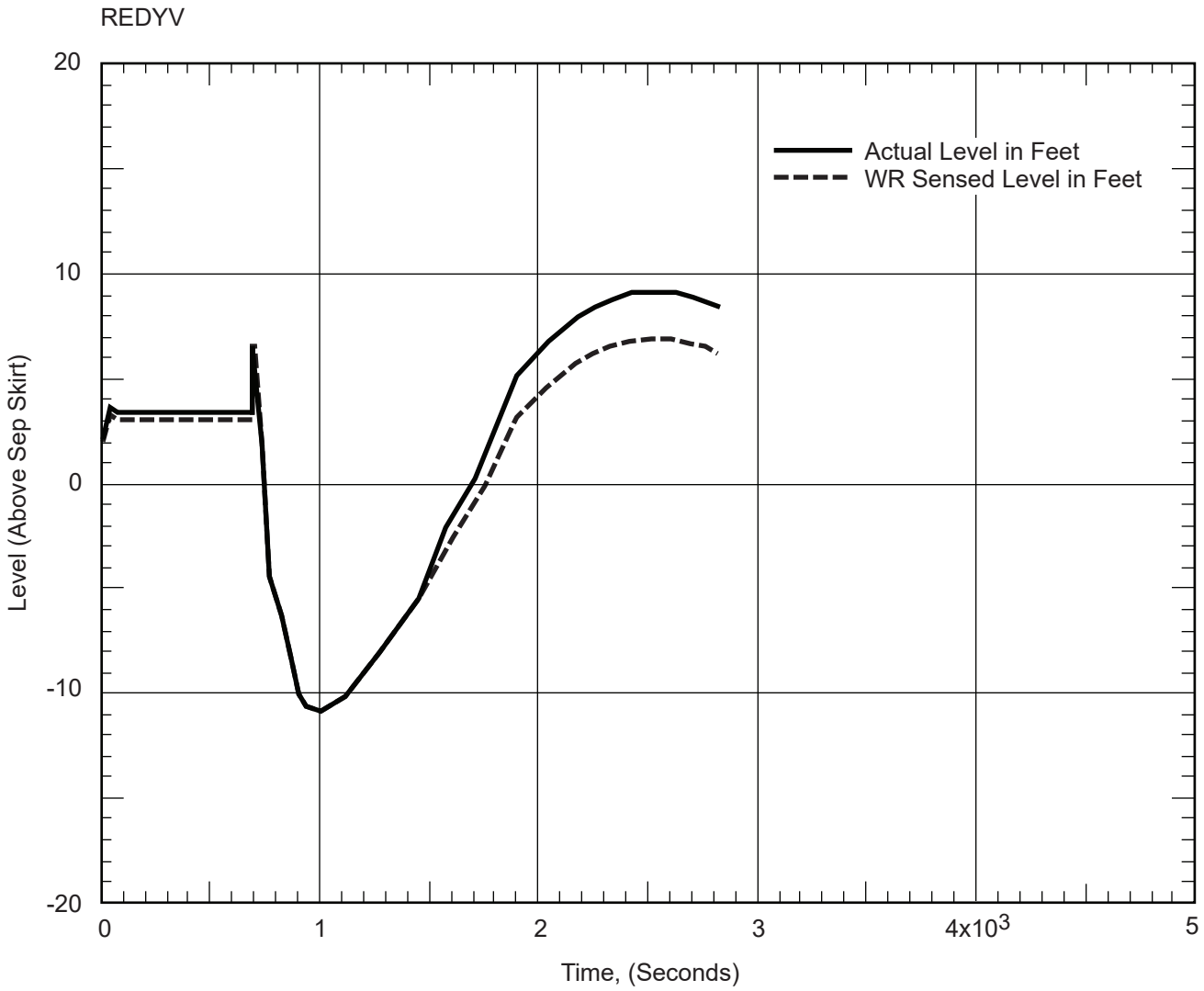

Columbia Generating Station Final Safety Analysis Report	Inadvertent Opening of Relief Valve Event		
	Draw. No. 960222.45	Rev.	Figure 15.8-4.1

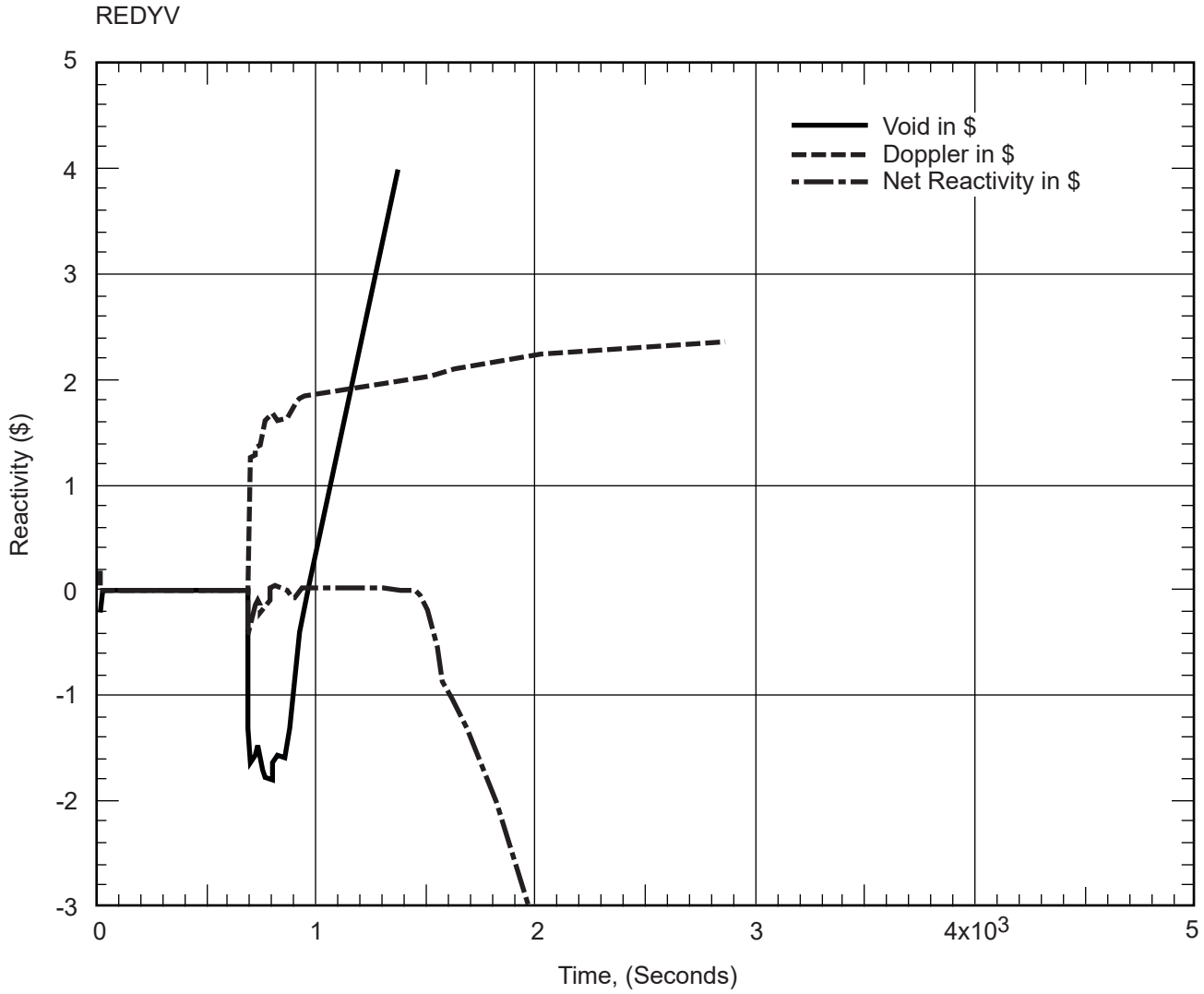

Columbia Generating Station **Final Safety Analysis Report**	**Inadvertent Opening of Relief Valve Event**		
	Draw. No. **960222.48**	Rev.	Figure **15.8-4.2**

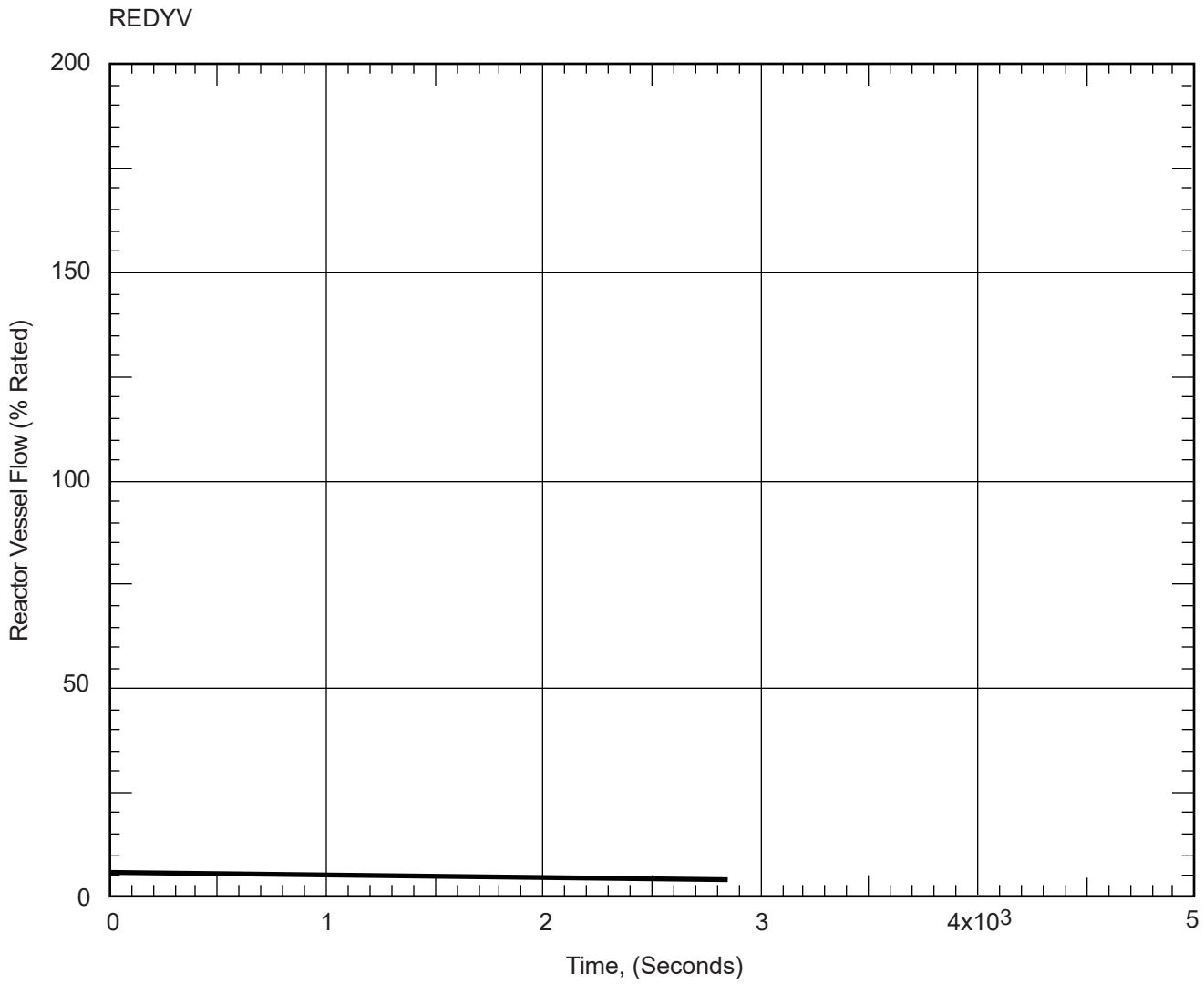

% Rated is based on 3486 MWt.

Columbia Generating Station **Final Safety Analysis Report**	**Inadvertent Opening of Relief Valve Event**		
	Draw. No. **960222.46**	Rev.	Figure **15.8-4.3**

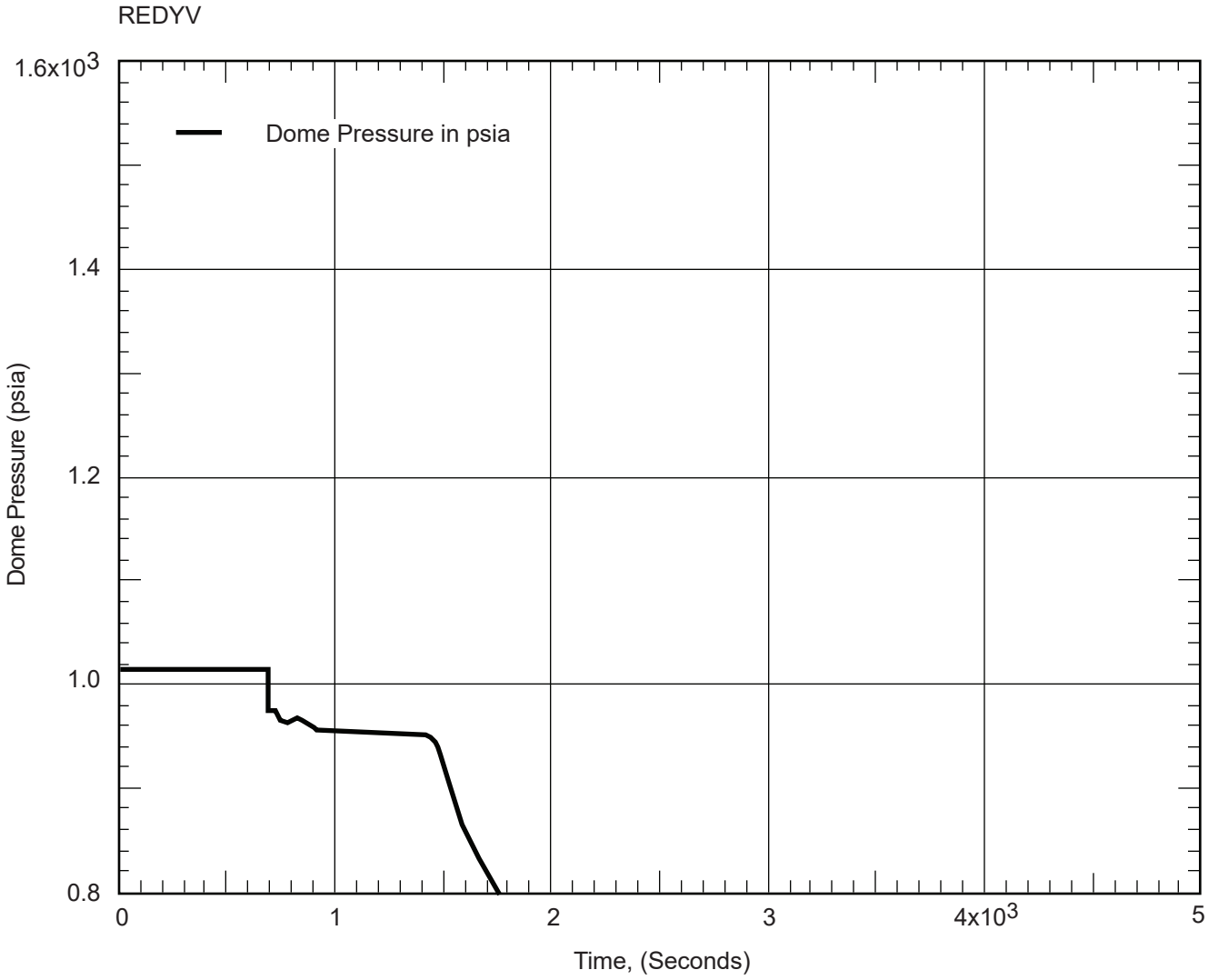

Columbia Generating Station **Final Safety Analysis Report**	**Inadvertent Opening of Relief Valve Event**		
	Draw. No. **960222.47**	Rev.	Figure **15.8-4.4**

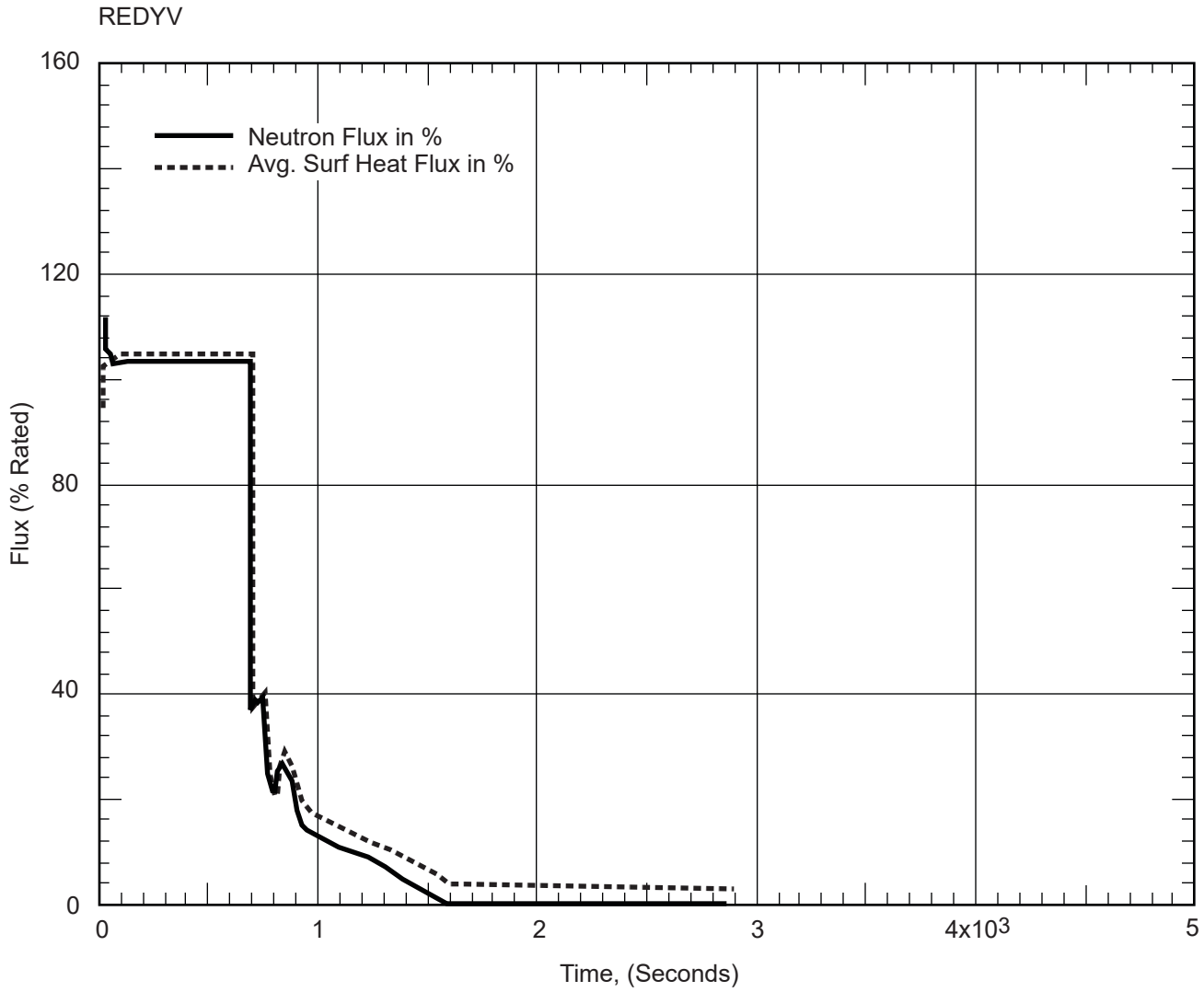

% Rated is based on 3486 MWt.

Columbia Generating Station Final Safety Analysis Report	Inadvertent Opening of Relief Valve Event		
	Draw. No. 960222.49	Rev.	Figure 15.8-4.5

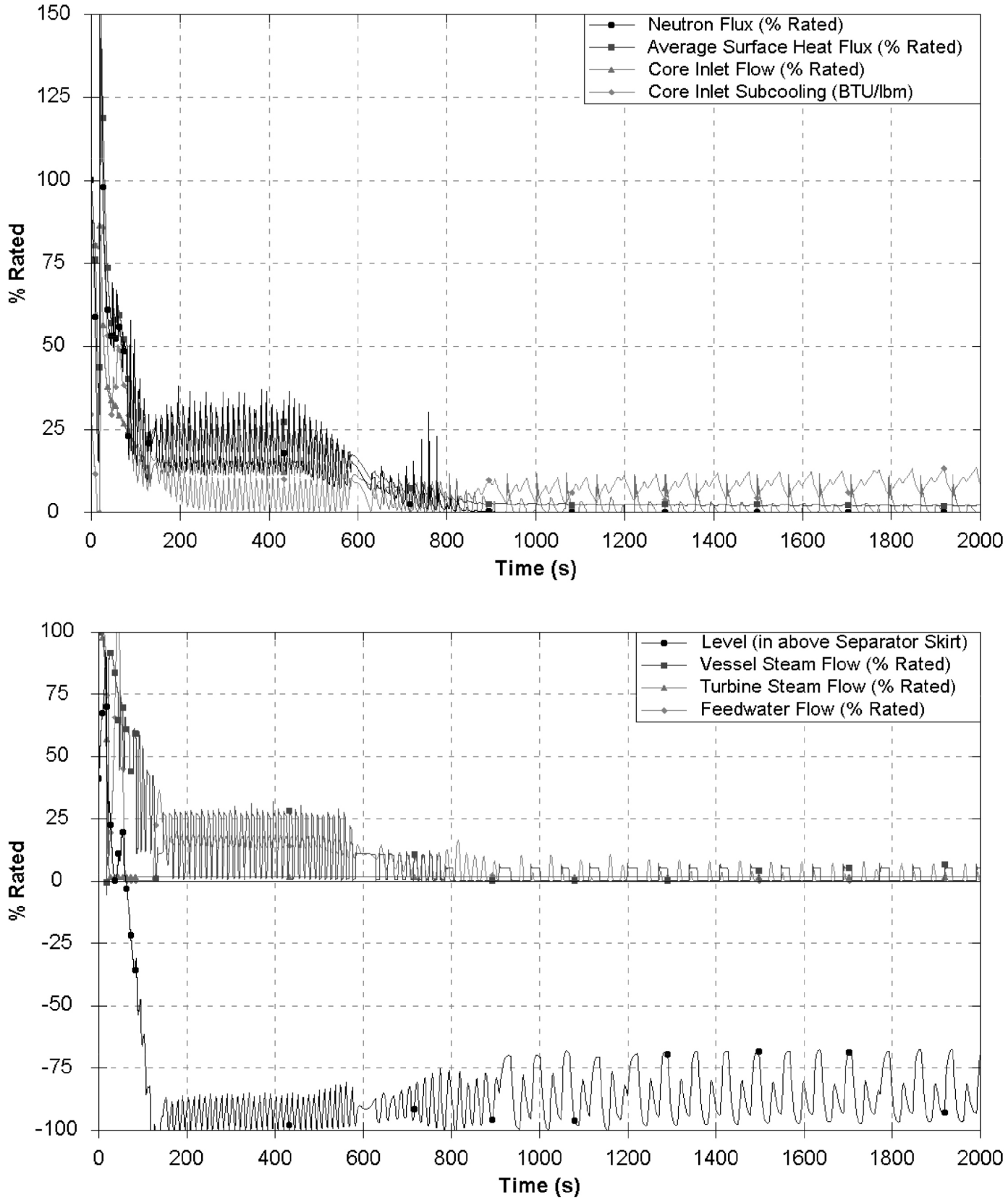

% Rated is based on 3486 MWt.

Columbia Generating Station Final Safety Analysis Report	Pressure Regulator Failure - Open Event		
	Draw. No. 020002.39	Rev. 1	Figure 15.8-5.1

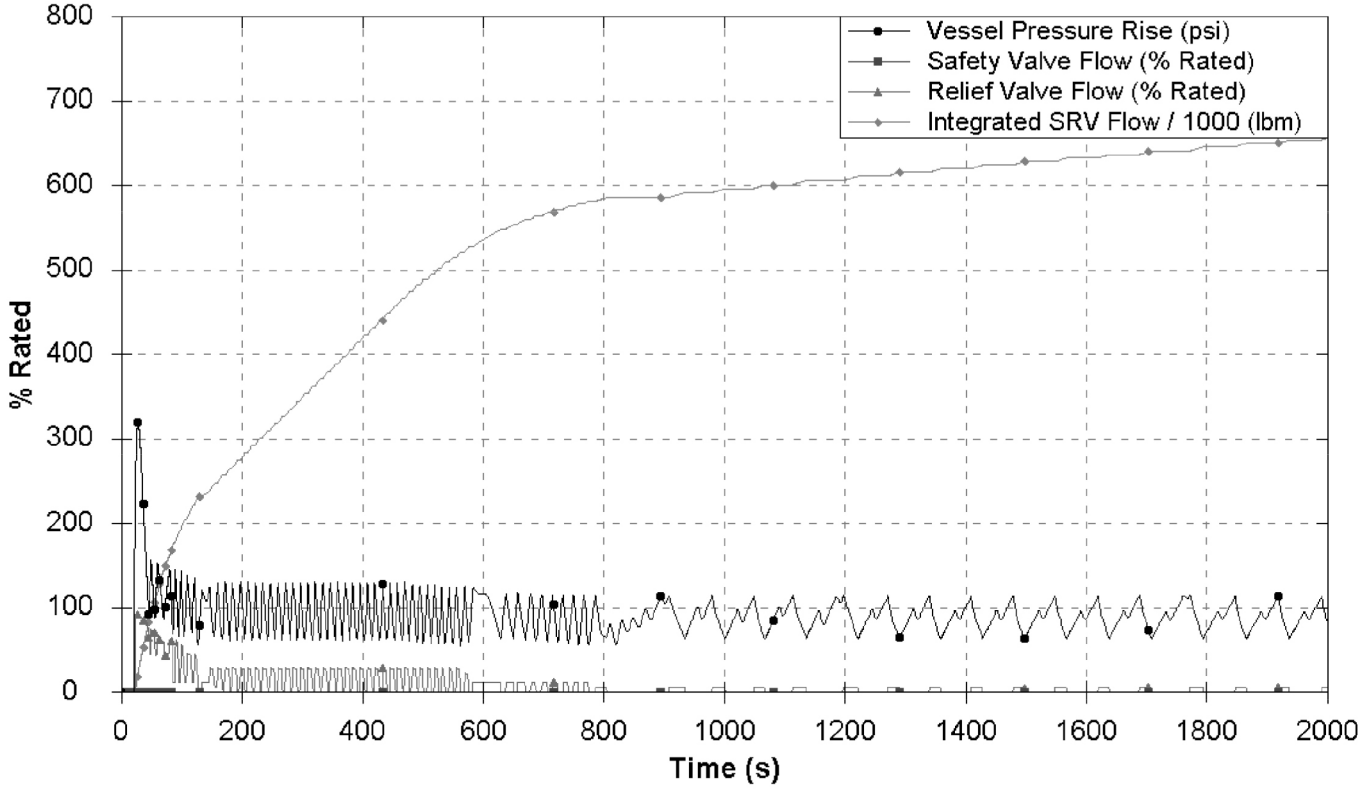

% Rated is based on 3486 MWt.

Columbia Generating Station Final Safety Analysis Report	Pressure Regulator Failure - Open Event		
	Draw. No. 020002.40	Rev.	Figure 15.8-5.2

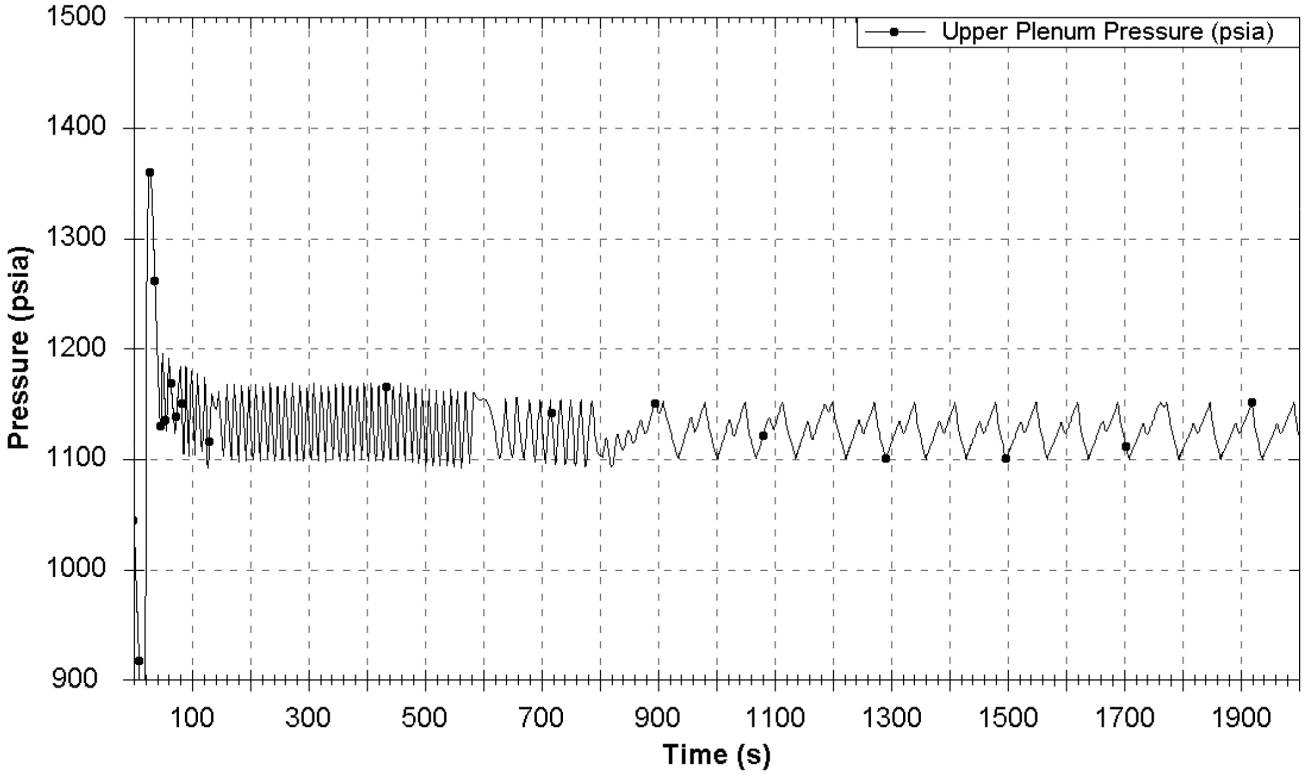

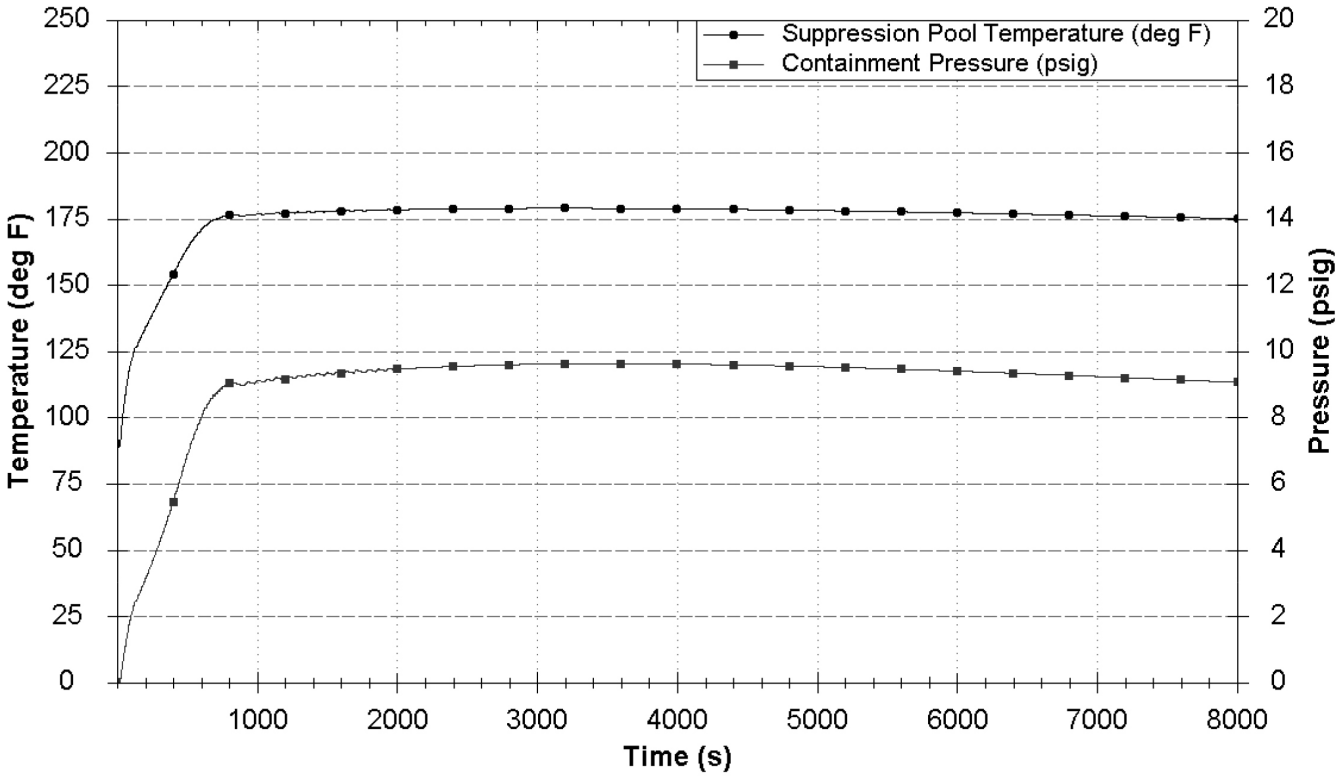

Columbia Generating Station Final Safety Analysis Report	Pressure Regulator Failure - Open Event		
	Draw. No. 020002.41	Rev. 1	Figure 15.8-5.3

DELETED

DELETED

Chapter 16

TECHNICAL SPECIFICATIONS

(See Operating License Appendix A)

TECHNICAL SPECIFICATION BASES

(Separate Volume)

LICENSEE CONTROLLED SPECIFICATIONS

(Separate Volume)

Chapter 17

QUALITY ASSURANCE

TABLE OF CONTENTS

Section — Page

17.1 QUALITY ASSURANCE DURING DESIGN AND CONSTRUCTION 17.1-1
17.1.1 ENERGY NORTHWEST QUALITY ASSURANCE PROGRAM 17.1-1
17.1.1.1 Organization 17.1-2
17.1.1.2 Quality Assurance Program 17.1-10
17.1.1.3 Design Control 17.1-15
17.1.1.4 Procurement Document Control 17.1-15
17.1.1.5 Instructions, Procedures, and Drawings 17.1-16
17.1.1.6 Document Control 17.1-16
17.1.1.7 Control of Purchased Material, Equipment, and Services 17.1-17
17.1.1.8 Identification and Control of Materials, Parts, and Components 17.1-18
17.1.1.9 Control of Special Processes 17.1-19
17.1.1.10 Inspection 17.1-19
17.1.1.11 Test Control 17.1-20
17.1.1.12 Control of Measuring and Test Equipment 17.1-21
17.1.1.13 Handling, Storage, and Shipping 17.1-21
17.1.1.14 Inspection, Test, and Operating Status 17.1-22
17.1.1.15 Nonconforming Materials, Parts, or Components 17.1-22
17.1.1.16 Corrective Action 17.1-23
17.1.1.17 Quality Assurance Records 17.1-24
17.1.1.18 Audits 17.1-25
17.1.2 THE BURNS AND ROE, INC. QUALITY ASSURANCE PROGRAM 17.1-26
17.1.2.1 Introduction 17.1-26
17.1.2.2 The Burns & Roe, Inc. Quality Assurance Topical Report 17.1-26
17.1.2.3 Exceptions to the Burns & Roe, Inc. Quality Assurance Topical Report 17.1-26
17.1.2.3.1 Chapter I - Organization 17.1-26
17.1.2.3.2 Chapter II - Quality Assurance Program 17.1-27
17.1.2.3.3 Chapter III - Design Control 17.1-27
17.1.2.3.4 Chapter IV - Procurement Document Control 17.1-28
17.1.2.3.5 Chapter V - Instructions, Procedures, and Drawings 17.1-29
17.1.2.3.6 Chapter VI - Document Control 17.1-29
17.1.2.3.7 Chapter VII - Control of Purchased Material, Equipment, and Services 17.1-30
17.1.2.3.8 Chapter VIII - Identification and Control of Material Parts and Components 17.1-31

Chapter 17

QUALITY ASSURANCE

TABLE OF CONTENTS (Continued)

Section Page

17.1.2.3.9 Chapter IX - Control of Special Processes 17.1-31
17.1.2.3.10 Chapter X - Inspection 17.1-31
17.1.2.3.11 Chapter XI - Test Control 17.1-31
17.1.2.3.12 Chapter XII - Control of Measuring and Test Equipment 17.1-32
17.1.2.3.13 Chapter XIII - Handling, Storage, and Shipping 17.1-32
17.1.2.3.14 Chapter XIV - Inspection, Test, and Operating Status 17.1-33
17.1.2.3.15 Chapter XV - Nonconforming Materials, Parts, or Components 17.1-33
17.1.2.3.16 Chapter XVI - Corrective Action 17.1-34
17.1.2.3.17 Chapter XVII - Quality Assurance Records 17.1-34
17.1.2.3.18 Chapter XVIII - Audits 17.1-34
17.1.3 GENERAL ELECTRIC COMPANY QUALITY ASSURANCE PROGRAM 17.1-34
17.1.4 BECHTEL POWER CORPORATION QUALITY ASSURANCE PROGRAM 17.1-35
17.1.4.1 Quality Assurance Topical Report 17.1-35
17.1.4.2 Scope of Responsibility 17.1-35
17.1.4.3 Project-Unique Modification to BQ-TOP-1, Revision 3A 17.1-36
ATTACHMENT 1 ..... 17.1-38
ATTACHMENT 2 ..... 17.1-39
ATTACHMENT 3 ..... 17.1-42
ATTACHMENT 4 ..... 17.1-43
ATTACHMENT 5 ..... 17.1-44
ATTACHMENT 6 ..... 17.1-45
ATTACHMENT 7 ..... 17.1-46

17.2 QUALITY ASSURANCE DURING THE OPERATIONS PHASE 17.2-1

Chapter 17

QUALITY ASSURANCE

LIST OF TABLES

Number	Title	Page
17.1-1	*General Electric Quality Assurance Evolutionary Process*	*17.1-47*

Chapter 17

QUALITY ASSURANCE

LIST OF FIGURES

Number	Title
17.1-1	*Energy Northwest Organization Chart*
17.1-2	*Energy Northwest CGS Organization Chart*
17.1-3	*CGS Project Management Organization Chart*
17.1-4	*Burns and Roe, Inc. CGS Organization Chart*
17.1-5	*Bechtel CGS Organization Chart*

Chapter 17

QUALITY ASSURANCE

17.1 QUALITY ASSURANCE DURING DESIGN AND CONSTRUCTION

The quality assurance requirements during design and construction were defined in the FSAR and were revised through Amendment 30 in June 1983. This section is no longer applicable since these phases are completed.

There are four principal participants in Columbia Generating Station (CGS) design and construction quality programs. They are the Owner, Energy Northwest; the Architect/Engineer (AE), Burns and Roe, Inc. (B&R); the Nuclear Steam Supply System (NSSS) Supplier, General Electric Company (GE); and the Construction Manager (CM), Bechtel Power Corporation.

a. Energy Northwest, as the owner and Licensee, has overall responsibility for assuring that the plant is designed and constructed in accord with approved Quality Assurance Programs (QAPs). The Energy Northwest CGS Project Quality Assurance organization provides management overview of the other elements of the site QAPs. Section 17.1.1 describes the Energy Northwest CGS QAP.

b. Burns and Roe, Inc. provides Architect/Engineer and related services for CGS. Section 17.1.2 describes the B&R QAP.

c. The General Electric Company (GE) provides NSSS design, fabrication, and erection/construction services for CGS. Section 17.1.3 describes the GE QAP.

d. The Bechtel Power Corporation provides construction management services for CGS. This service consists primarily of direction and coordination of site contractor activities and includes related Quality Assurance/QC services. Section 17.1.4 describes the Bechtel QAP.

17.1.1 ENERGY NORTHWEST QUALITY ASSURANCE PROGRAM

Energy Northwest has implemented a QAP for the design, procurement, and construction of Energy Northwest Columbia Generating Station (CGS). This QAP has been implemented in accordance with requirements of Appendix B to 10 CFR 50. The applicable requirements of Appendix B, 10 CFR 50 are applied to those items classified as Energy Northwest Quality Class I due to their relationship to a nuclear safety function.

As the license applicant, Energy Northwest is responsible for the plant. Therefore, the Energy Northwest CGS QAP and its implementation has been structured to assure that design,

procurement, and construction activities are accomplished in accordance with sound engineering principles and practices. Systems, components, and structures that are safety-related, in the context of 10 CFR 20, 10 CFR 50, and 10 CFR 100, are required to be designed, specified, fabricated, installed, and tested in accordance with applicable regulatory requirements, codes, standards, specifications, and procedures.

The description of the Energy Northwest CGS Design and Construction QAP which follows is of the program as it currently exists. This program evolved from the original quality program which first appeared in Appendix D.O of the PSAR. The changes involved in this evolution process include: NRC requested changes; updates in organization responsibilities and authorities; and the incorporation of new requirements.

17.1.1.1 Organization

Energy Northwest Managing Director is responsible to the Board of Directors for the overall management of Energy Northwest activities, including the establishment and implementation of policies. The Managing Director resolves issues involving quality brought to his attention because of failure to reach resolution at lower levels of management. Overall Energy Northwest organization is shown on Figure 17.1-1.

The Managing Director has the ultimate responsibility for the QAP. The Managing Director shall ensure that the program is implemented and maintained by assigning the appropriate authority and responsibility to the Director of Licensing and Assurance.

The Deputy Managing Director has the authority to implement the policies of the Managing Director. The Deputy Managing Director is accountable to the Managing Director and is responsible for:

a. Coordinating and integrating the activities of Energy Northwest organizations,

b. Supporting and advising the Managing Director on the performance of Energy Northwest functions and evaluation of such, and

c. Acting for the Managing Director, as required.

The Director of Licensing and Assurance reports and is accountable to the Managing Director for the overall development, implementation, and verification of the Energy Northwest Quality Assurance and Nuclear Safety and Regulatory programs to ensure compliance with regulations, codes, and standards. These responsibilities include:

a. Determining the adequacy and effectiveness of program implementation,

b. Maintaining cognizance of changing regulatory requirements and providing controlled interface between Energy Northwest and regulatory agencies,

c. Exercising authority to stop nonconforming work of any Energy Northwest Contractor or Supplier organization, and

d. Administering corporate and project Quality Assurance and Nuclear Safety and Regulatory program activities.

The Director of Licensing and Assurance operates through the Manager of Construction Quality Assurance, the Manager of Audits, and the Manager of Nuclear Safety and Regulatory Programs.

The Director of Operations reports and is accountable to the Managing Director for development and implementation of policies and programs supporting the design, construction, and operational phases of Nuclear Power projects WNP-1, CGS, and WNP-3, and the extended construction delay of WNP-4/5. The Director of Operations carries out his responsibilities through the Director of Generation; the Director of Technology; and the Program Directors of WNP-1, CGS, and WNP-3.

The Director of Power Generation reports to the Director of Operations and is responsible for ensuring that the calibration of measuring and test equipment is performed in accordance with approved procedures which establish calibration frequencies, procedures used, recall methods, identification requirements, tolerances and records required to establish equipment history and calibration data.

The Director of Power Generation carries out his responsibilities through the Manager, Generation Services; the Manager, Generation Maintenance; and the Supervisor of Instrumentation Maintenance and Calibration. The Plant Manager and Test and Startup also report to the Director of Power Generation. Startup activities are conducted in accordance with the Operational QAP, Topical Report EN-QA-004, as referenced in Section 17.2.

The Director, Technology reports to the Director of Operations and is responsible for:

a. Providing technical and engineering support to the project,

b. Assisting the project engineering organization in providing technical direction to the Architect Engineer,

c. Assisting the project in performing technical overview of Energy Northwest activities,

d. ASME Code consultation to the project, including interfacing with ASME,

e. Performing and managing selected technical programs, having applicability to several projects, including preoperational environmental monitoring, and geology,

f. Providing independent technical evaluations when requested by the Director of Operations, and

g. Overall Energy Northwest records management policy. Implementation of the policy with regard to functions described in this manual is the responsibility of all Directorates, as applicable.

To accomplish this role, the Director of Technology operates through the Assistant Directors, Technology for Systems Engineering, Generation Engineering, CGS Plant Engineering, and Fuel and Environment.

The Director of Support Services reports to the Managing Director and is responsible for the development and implementation of policies and programs which support design, construction, and operation of Energy Northwest plants in the areas of safety and security. Areas in which the Director of Support Services provides support for the projects include industrial safety and fire protection, technical training, administration, and security. To accomplish this role, the Director of Support Services operates through the Manager, Technical Training Programs; the Manager, Administration; the Manager, Health and Safety Programs; and the Manager, Security Programs.

The Chief Financial Officer reports to the Managing Director and is responsible, through the Manager of Central Materials and Procurement, for the development of corporate material management and procurement policy, and the procurement and control of corporate, multiple-project and specialized materials and related services required to support the design and construction of Energy Northwest nuclear power plants.

The Program Director is directly accountable to the Director of Operations and is responsible for the safe, successful, and timely completion of construction of the nuclear plant (including those responsibilities assigned to the Owner by Section III of the ASME Code). The Program Director accomplishes Project responsibilities by managing and directing the AE who performs the design; the CM who manages the construction on the Project; and Project Energy Northwest personnel. See Figures 17.1-2, 17.1-4, and 17.1-5.

The Deputy Program Director reports to the Program Director and is responsible for managing and directing the completion of the design, construction, and turnover to Operations of the power plant in accordance with established requirements. These responsibilities include:

a. Monitoring AE/CM internal performance and also monitoring their management of other Contractor's performance against established requirements; determines corrective measures and/or gives direction and advice, as necessary,

b. Ensuring necessary licenses and permits are obtained, and

c. Providing Project-level reviews and reports, as necessary or directed.

The manager of each CGS department or organization, as well as the manager of each Energy Northwest home office support organization, is responsible for:

a. Identifying those activities within his organization which are quality-related,

b. Establishing and clearly defining the duties and responsibilities of personnel within his organization who execute those quality-related activities, and

c. Ensuring that quality-related activities are accomplished by qualified personnel in accordance with approved procedures, as required.

The principal CGS project organizations are shown on Figures 17.1-2 and 17.1-3. A description of the primary quality-related functions follows.

The project Engineering Manager reports to the Program Director and is responsible for the timely completion of design for effective field engineering support of the construction effort and for the direction of the AE. Included in his responsibilities are:

a. Managing the design activities of the Project and ensuring its technical adequacy. This includes all actions necessary to ensure a plant design which is constructable, which conforms to all regulatory requirements and corporate commitments that are necessary to receive and retain an operating license, and which is safe and efficient to operate;

b. Those engineering activities which provide solutions and prevention of technical construction restraints which ensure the technical adequacy of the completed construction. In addition, the project Engineering Manager is responsible for dispositioning Energy Northwest-originated nonconformances; and

c. Continuous review of the plant design as it applies to NRC commitments and safety requirements.

The project CM is responsible to the program Director for construction activities at the project, including the direction of the CM. Included in his responsibilities are:

a. Providing the necessary management, monitoring, control, and reporting elements that are necessary to ensure performance of the CM.

b. Overview of CM for receiving, storage, issuance, and maintenance of Energy Northwest prepurchased equipment and material from the time of receipt at the project (or release from the Contractor) until it is transferred to the final control of the Energy Northwest.

The Site Administration Manager is responsible to the program Director for providing support services which include management of project facilities, services, personnel services, budget control, procedure development and control; and

a. Shall be responsible for establishing, developing, implementing, and maintaining procedures/instructions for controlling the receipt, distribution, encoding, retention, and disposition of prepurchased equipment, Energy Northwest, AE, CM, and Contractor quality assurance records.

b. Shall be responsible for the receipt, control, preservation, and retrieval of project construction records.

These responsibilities are carried out through the Manager, Records Management, and the Facilities/General Services Supervisor.

The Business Manager reports to the program Director. The Business Manager ensures that Corporate Contract Management policies and procedures are implemented which include management of contract administration, procurement, materials management, and materials control.

a. Supervisor, Contract Administration provides contract administration support including construction contract administration, claims management, contract data reporting, bid preparation, evaluation, and award processing;

b. Manager, project procurement provides purchasing, renting, leasing, or otherwise obtaining materials, equipment, supplies, services, and related phases of contract administration including preparation, award of contracts, and administration;

c. Manager, project Material Control provides receiving, handling, warehousing, excess materials, and storage until installed; and

d. Materials Management provides Project inventory control support, coordination of material, identifies material needed, startup, and operations support.

The Manager, Program Control reports to the Program Director CGS, and is responsible for:

a. Overall administration and coordination of the Project budget, including analyses of Owner's cost, construction management forecasts, and AE estimates,

b. Overall analysis and reporting for the performance measurement system,

c. Financial verification and processing of payments to contractors and vendors, and

d. Coordination and administration of the change management system.

The Manager of Project Licensing reports directly to the Manager, Regulatory Programs and is matrixed to the Program Director. The Manager, Project Licensing is responsible for:

a. Providing coordinated Project-level management of licensing activities,

b. Developing and implementing Project licensing policies consistent with Corporate policies, and

c. Ensuring technical adequacy of licensing submittals.

The Manager, Construction Quality Assurance reports to the Director, Licensing and Assurance and is responsible for the development and implementation of the QAP during the Nuclear Power Plant Design and Construction phases. He is also responsible for Procurement QA; plant modifications; qualification and certification of Energy Northwest nondestructive examination and inspection personnel, and other personnel requiring certification; surveillance of nondestructive examination and inspection activities.

The Manager of Procurement Quality Assurance reports to the Manager of Construction Quality Assurance and is primarily responsible for the definition and implementation of the source surveillance/audit program for verification of activities performed by Energy Northwest vendors (including the NSSS vendors). The Manager of Procurement Quality Assurance is specifically responsible for:

a. Review of and concurrence with procurement documents for items and services (other than nuclear fuel) initiated by Corporate personnel,

b. Performance of preaward surveys/evaluations of vendors/suppliers, and maintaining and distributing an updated listing of those approved,

c. Planning, coordination, and performance of source surveillances, source inspections, and source audits to verify implementation of Energy Northwest direct-purchase Supplier QA/QC Programs,

d. Review and/or approval of offsite Energy Northwest-administrated vendor/supplier quality assurance/ quality control procedures and programs,

e. Perform receipt-inspection of items received at the Corporate Warehouse and Corporate extensions,

f Verify that received items are handled and stored correctly,

g. Ensure training of receiving inspectors,

h. Provide program overview of AE vendor surveillance activities,

i. Quality assurance vendor surveillance of offsite Supplier activities,

j. Audits, surveillances, and/or surveys of suppliers of items, materials, or services who do not have ASME Certification, and

k. Provide overview of NSSS vendors.

The Project Quality Assurance Manager reports to the Manager, Construction Quality Assurance and is matrixed to the Program Director. The Project Quality Assurance Manager is responsible for:

a. Verification of the implementation of Quality Assurance Requirements Manual,

b. Verifying adequate implementation of an approved stop work authority program and directing a stop work order should conditions so dictate,

c. Assurance of a program for identification and reporting of nonconformances,

d. Verification, by audits and surveillances, that the AE, CM, selected contractors, and other Project organizations are implementing applicable quality requirements,

e. Ensuring that adequate staffing is obtained to implement the QAPs at the Project,

f. The assignment of adequately trained an qualified/certified personnel to perform quality verification activities,

g. Overview of AE/CM approval of Contractor procedures and instructions,

h. Reporting significant conditions adverse to quality to the Program Director and the Director, Licensing and Assurance, and

i. Reporting quality problems and trends to the Manager, Construction Quality Assurance for use in developing standards for Licensing and Assurance management systems to preclude repetition of quality assurance problems.

The Manager of Audits reports to the Director, Licensing and Assurance and is responsible for maintaining an organization of qualified auditors responsible for verifying implementation of the QAP as follows:

a. Performing quality assurance audits of internal Energy Northwest organizations and external organizations (e.g., AE/CM); except for Management Audits,

b. Developing audit and surveillance schedules and selecting qualified personnel to perform the activities of this function,

c. Certification of Audit Team Leaders,

d. Training of audit personnel,

e. Participating in audits and providing overview of AE activities,

f. Periodic review of Corporate and project audit reports to identify any quality trends which may constitute a need for corrective action, and

g. Maintenance of audit records.

The Manager of Nuclear Safety and Regulatory programs reports to the Director of Licensing and Assurance and is responsible for the development and implementation of policies and programs which support design, construction, and operation of Energy Northwest plants in the areas of Nuclear Safety and Regulatory Programs. Areas in which the Manager of Nuclear Safety and Regulatory Programs provides support for the Projects include nuclear safety assurance, environmental compliance, and licensing. The Manager, Nuclear Safety and Regulatory Programs is responsible for establishment and maintenance of Energy Northwest/ regulatory interfaces and ensuring that nuclear licensing transmittals receive an adequate, competent, and timely review prior to making commitments. To accomplish this role, the Manager, Nuclear Safety and Regulatory Programs operates through the Manager, Regulatory Programs and the Manager, Programs and Safety Performance.

17.1.1.2 Quality Assurance Program

Energy Northwest has established and implemented a QAP for the design, procurement, and construction phase of the CGS facility. The QAP is based on the assignment of quality classifications which impose applicable quality requirements to structures, systems, and components.

The Energy Northwest QAP and the supporting procedures and instructions comply with the requirements of Appendix B to 10 CFR Part 50, "Quality Assurance Criteria for Nuclear Power Plants and Fuel Reprocessing Plants", and applicable regulatory guides as specified in Section 1.8.2 of the FSAR.

Energy Northwest's design and construction activities at CGS are performed in accordance with the policies established by the Energy Northwest QAP Manual for Design and Construction.

A matrix of the Energy Northwest QAP procedures and the corresponding criteria of 10 CFR 50, Appendix B, appears in the table below followed by description of the scope covered by these procedures.

10 CFR 50, Appendix B Criteria	*Supply System QAR*
Organization	*QAR-1*
Quality Assurance Program	*QAR-2*
Design Control	*QAR-3*
Procurement Document Control	*QAR-4*
Instructions, Procedures and Drawings	*QAR-5*
Document Control	*QAR-6*
Control of Purchased Materials, Equipment and Services	*QAR-7*
Identification and Control of Material, Parts and Components	*QAR-8*
Control of Special Processes	*QAR-9*

Inspection	*QAR-10*
Test Control	*QAR-11*
Control of Measuring and Test Equipment	*QAR-12*
Handling, Storage and Shipping	*QAR-13*
Inspection, Test and Operating Status	*QAR-14*
Nonconforming Materials, Parts or Components	*QAR-15*
Corrective Action	*QAR-16*
Quality Assurance Records	*QAR-17*
Audits	*QAR-18*

a. Organization - QAR-1

Establishes an organizational structure that will direct the resources of Energy Northwest and its contractors to engineer, design, procure, fabricate, manufacture, install, construct, and test the Energy Northwest Nuclear projects to maximize safety, reliability, and efficiency.

b. Program - QAR-2

Defines the QAP established by Energy Northwest for design and construction. Included in this program is a system for classifying structures, systems, components, design characteristics, and procurement documents to determine the Quality Assurance activities associated with each item.

c. Design Control - QAR-3

Establishes a system of independent reviews to ensure applicable quality regulatory, code, and design basis requirements are properly translated into design and procurement documents for each structure, system, and component. The documented review provides a check for design adequacy, inspectability, and compatibility with intended usage.

d. Procurement Document Control - QAR-4

Establishes a system to ensure that procurement documents and changes thereto incorporate the technical and quality assurance requirements necessary to ensure the quality and integrity of procured material, equipment, and services.

e. Instructions, Procedures, and Drawings - QAR-5

Establishes system defining the requirements and responsibilities controlling the preparation, review, approval, and release of instructions, procedures, and drawings which implement quality requirements.

f. Document Control - QAR-6

Establishes a system to control the issuance of documents, including changes thereto, which prescribe activities affecting quality.

g. Control of Purchased Material, Equipment, and Services - QAR-7

Establishes a system to ensure material, equipment and services are procured in accordance with the requirements specified in the procurement documents.

h. Identification and Control of Materials, Parts and Components - QAR-8

Establishes a system for the identification and control of material, parts, components, equipment and partially-completed assemblies to ensure that items incorporated into the plant are of proper configuration and, when necessary, traceable to all supporting quality assurance documentation.

i. Control of Special Processes - QAR-9

Establishes a system for the control of special processes.

j. Inspection - QAR-10

Establishes a system which ensures the program requirements for inspection are delineated in the specifications and contracts and ensures that inspection and surveillance activities are performed in accordance with predetermined requirements delineated in written instructions in a planned and systematic manner.

k. Test Control - QAR-11

Establishes a system to ensure that plant testing activities are performed in accordance with predetermined requirements, approved, and delineated in written instructions.

l. Control of Measuring and Test Equipment - QAR-12

Establishes a system for the control, calibration, and adjustment of tools, gauges, instruments, and other inspection, measuring, testing, and maintenance devices at specified periods to ensure the usage of proper type, range, and accuracy necessary to verify conformance to established requirements.

m. Handling, Storage, and Shipping - QAR-13

Establishes system to control the handling, storage, shipping, cleaning, and preservation of material, parts, components, and equipment in accordance with written and approved procedures, instructions and recommendations, to ensure that the designed integrity and functionality of the item are maintained.

n. Inspection, Test, and Operating Status - QAR-14

Establishes a system to indicate the inspection, test, and operating status for all structures, systems, or components to preclude the inadvertent bypassing of their inspection and test requirements and to prevent their inadvertent operation.

o. Nonconforming Material, Parts, or Components - QAR-15

Establishes a system to ensure that nonconformances are identified, documented, segregated or otherwise controlled, prevented from inadvertent use or installation and that notification of actions taken is transmitted to the affected parties.

p. Corrective Action - QAR-16

Establishes a system to ensure that significant conditions adverse to quality are identified, the cause determined, documented, brought to the attention of upper management, corrected as soon as possible, and that measures are taken to preclude repetition.

q. Quality Assurance Records - QAR-17

Establishes a system for the control and maintenance of all records sufficient and necessary to provide objective evidence of the activities affecting quality.

r. Audits - QAR-18

Establishes a system of audits to be performed in a planned and systematic manner to verify compliance and effectiveness of the Energy Northwest QAP.

The CGS Project Management Instructions (PMI) Manual delineates the responsibilities of and interfaces between project organizations. Each project organization is responsible for developing and using implementing procedures/instructions for their assigned functions.

Quality Assurance Instructions, Project Procurement Manuals, and other procedures or instructions pertinent to specific departmental functions describe the measures used to implement the provisions of the programs.

The Energy Northwest Quality Assurance Manager assigned to the CGS Project is responsible for establishing and administering the CGS Quality Assurance policies, goals, and objectives of the QAP and verifying adequate implementation.

The CGS Quality Assurance personnel have the authority and responsibility to perform the necessary actions, including provisions for stop work authority, to accomplish their assignments.

To ensure that CGS Project personnel who perform quality-related activities are cognizant of the quality requirements, they are provided training and indoctrination as prescribed by the Project Training Program. The initial indoctrination includes discussions as to the purpose of applicable codes and standards and familiarization with Appendix B, 10 CFR Parts 50, 50.55(e), and 10 CFR Part 21. The training phase includes instructions on the Project QA policies and instructions on specific quality activities directly related to individual job functions. Personnel whose activities require specific qualifications such as nondestructive testing, audit, inspection, and testing are suitably evaluated, trained as appropriate, and certified.

Training sessions are an ongoing activity and are appropriately documented. Nondestructive test, audit, test, and inspection personnel qualification records are maintained.

The CGS QAP is audited on a regular basis by the Home Office Energy Northwest Audit Section.

Contractors who perform safety-related work include the AE, NSSS Supplier, and CM. These contractors are required to establish and implement QAPs consistent with the applicable requirements of 10 CFR Part 50, Appendix B. These programs are reviewed for adequacy by CGS Project personnel. The AE, NSSS Supplier, and Construction Management Contractor quality-related functions are controlled in accordance with the programs described in Sections 17.1.2, 17.1.3, and 17.1.4, respectively.

17.1.1.3 Design Control

Burns and Roe, as AE, is responsible for specifying the overall design of the project, except that GE is responsible for design of the NSSS system. Design by other project organizations (contractors) is performed in accordance with an approved QAP. The details of the Burns and Roe and GE CGS QAPs are described in Sections 17.1.2 and 17.1.3 respectively.

Design control is performed by project organizations in accordance with approved procedures and/or instructions.

Design input, such as design bases, performance requirements, regulatory requirements, appropriate quality standards, and industry codes and standards are properly identified, documented, and translated into design documents, such as drawings and specifications.

Procedures describe the controls established for the review, approval, release, distribution, and revision of design documents involving design interfaces.

Changes in design, including field changes, and the reason for changes, are documented, controlled, and reviewed in accordance with measures commensurate with those applied to the original activity.

Computer programs for quality affecting activities are controlled, in accordance with quality program requirements of the user organization.

17.1.1.4 Procurement Document Control

Procurement of material, equipment, and services for the Project is accomplished through procurement specifications contracts, or purchase orders which are prepared, reviewed, and approved by cognizant personnel. Procedures require that procurement documents incorporate the applicable quality assurance, regulatory code, and design requirements. The procurement documents require that bidders submit a QAP or plan for major contracts describing their policies, procedures, and systems to be utilized in the control of quality throughout the applicable phases of production, from design to final shipment, erection, or installation.

Procurement documents provide requirements for suppliers to submit or make available for review applicable documents such as drawings, specifications, procedures, instructions,

inspection and test records, and quality assurance records to the Project for review and/or approval.

Procurement documents require suppliers to provide measures for retention, control, and maintenance of their Quality Assurance records procurement documents specify the appropriate records to be delivered to the Project prior to or with delivery.

When source surveillance is required ,procurement documents require suppliers to provide right of access to their facilities, procedures, and records for inspection and audit by Project personnel. Procurement documents issued after January 1978 require the supplier to establish measures for reporting 10 CFR Part 21 reportable deficiencies and disposition of nonconformances from procurement document requirements. Procurement documents require that the supplier retain the responsibility for monitoring and evaluating their sub-tier suppliers' performance to specified requirements.

Procurement documents for spare or replacements contain original, equivalent, or improved technical requirements including codes and standards and current applicable QAP requirements.

Changes and revisions to procurement documents are subject to the same or equivalent review/approval requirements as the original document.

17.1.1.5 Instructions, Procedures, and Drawings

Activities affecting quality are described in procedures, instructions, and drawings and the activities are conducted in accordance with these documents.

Procedures, instructions, and drawings include adequate quantitative and qualitative acceptance criteria to ascertain that the prescribed activities have been satisfactorily accomplished.

Procedures, instructions, and drawings are subject to review to assure that applicable codes, standards, and acceptance/rejection criteria are included. Review, approval, or information requirements are included in contract documents.

17.1.1.6 Document Control

A document control system is implemented by the Project. The requirements ensure that documents, including changes, are reviewed, approved, and released in a timely manner to the locations where the activity is being performed. The Project prepares procedures, instructions, and drawings as necessary to ensure that activities such as design, procurement, manufacturing, construction and installation, testing, inspection, auditing, calibration, and special processes are adequately prescribed and the necessary quality requirements are stated.

Changes to these documents require review and/or approval commensurate to that performed on the original document.

Contractors/subcontractors involved in activities affecting quality are required to establish measures for document control which satisfy project requirements.

Changes to specifications and drawings require approval of the cognizant Engineering personnel. As required by Procurement Documents, changes to supplier and contractor drawings and procedures are reviewed and approved by the Project Organization. Changes to documents such as specifications and drawings are indicated by a revision, change order, or equivalent documented methods.

Project drawings and specifications, supplier and contractor drawings, current revisions, addenda, and changes in design and engineering change notices are released in a controlled manner.

To preclude the inadvertent use of obsolete or superseded documents, a Project drawing/specification status report is periodically issued. These reports indicate the current revision to AE drawings and specifications and related changes, addenda, and design and engineering change notices. Site contractors are required to establish measures to ensure that obsolete or superseded documents are controlled to prevent their inadvertent use.

17.1.1.7 Control of Purchased Material, Equipment, and Services

Prior to award of contract, Quality Assurance, Engineering, and other personnel, as required, perform an evaluation of accepted bids to determine the supplier's capability to meet procurement requirements. The evaluation may consist of a direct survey of the prospective supplier's facility and personnel or, a review and evaluation of the implementation of his QAP, or evaluation of the supplier's history of providing satisfactory products to the project, or evaluation of the supplier's current records supported by objective evidence.

Surveillance of suppliers, as required, during fabrication, inspection, testing, and shipment of materials, equipment, and components is performed to provide assurance that material, equipment, and services conform to procurement document requirements. Surveillances are conducted by qualified personnel in accordance with established plans and to procedures that identify the attributes or processes to be witnessed and/or verified and the acceptance criteria. Those items which are simple and standard in design, manufacture, and test, or where quality characteristics can be verified by standard inspections or tests after delivery, are accepted during receiving inspection with no source surveillance. Receiving inspection is performed in accordance with written procedures or instructions.

Measures are established to provide for delivery of documentation from the supplier to the site, prior to or with delivery. These documents provide objective evidence:

a. That the items conform to the procurement quality requirements such as specifications, codes, and standards,

b. That the required tests, examinations, and inspections have been performed, and

c. That nonconformances have been dispositioned as required.

17.1.1.8 Identification and Control of Materials, Parts, and Components

Measures are established to identify and control materials, parts, and components including partially completed subassemblies. Requirements for identification and traceability are determined during initiation of design documents and are specified in procurement specifications and on drawings.

These measures require that items important to the safety of the Project are identified in a manner (i.e., heat/lot number, part number, serial number, etc.) that can be traced to the appropriate documentation, or group of documents, such as drawings, specifications, purchase orders, material certifications, etc. The identification is maintained and verified, as required, throughout fabrication, installation, and use of the item.

Implementation of these measures is accomplished by the responsible contractors in accordance with approved procedures.

Verification that items are properly identified is performed during vendor surveillance and receiving inspection activities.

During receipt inspection, materials, parts, and components are identified as acceptable or unacceptable. Where practicable, unacceptable items are physically segregated from acceptable items. Items identified as unacceptable may be released for installation provided the following conditions are met:

a. Traceability and identification is maintained,

b. The item can be brought to an acceptable condition without damage to associated equipment or structures, and

c. Controls are established to ensure retrievability and, when applicable, limit the use of the item.

17.1.1.9 Control of Special Processes

Measures are established for the procedural control of special processes that require interim in-process controls in addition to that inspection and/or examination to ensure achievement of required quality. Examples of these processes are coating/plating, heat treating, welding material cleaning, and nondestructive testing (NDT).

Special processes specified in fabrication/construction documents are controlled and are performed by qualified personnel using approved procedures and equipment evaluated to ensure compliance in accordance with applicable codes, standards, and specifications. Special processes delineated in the procurement documents may require that the applicable contractors submit procedures for review and approval.

17.1.1.10 Inspection

Measures are established to assure that an inspection program is planned and scheduled.

Equipment manufacturers, installers, and constructors are required by procurement documents to perform the inspection necessary to verify that items conform to established criteria. Procurement documents also require that inspection activities are performed in accordance with documented instructions, procedures, and drawings, as applicable.

Measures are implemented to ensure that inspections and/or tests are performed on work operations as necessary to verify quality, that personnel performing inspections are independent of the individual or group performing the activity being inspected and are qualified to the requirements of the applicable codes, standards, and company programs. Records of certification of qualification are maintained in a current status. Inspection planning provides measures to identify mandatory inspection hold points for contractor inspection personnel. Where appropriate, procedures, instructions, and checklists used in performing inspections, include as a minimum:

a. Identification of characteristics and activities to be inspected,

b. Identification of the individuals or groups responsible for inspection,

c. Acceptance/rejection criteria,

d. Inspection method, and

e. Inspection reports attesting to the completion of inspection and the identity of the inspector or data recorded.

The inspection program provides that modification, repairs, and replacements are inspected in accordance with the original design and inspection requirements or acceptable alternatives.

Construction inspection, and receiving inspection at the Project Site is performed by Construction Management Contractor Quality Control and/or installing contractor Quality Control personnel for those activities within the scope of their responsibility. Construction Management Contractor Quality Control personnel perform receiving inspection functions on project supplied materials, parts and components. Construction Management Quality Assurance personnel perform surveillance/audit functions on these activities to ensure compliance with project requirements.

The Energy Northwest Project Quality Assurance performs surveillance/audit functions on the preceding activities.

17.1.1.11 Test Control

A test program is established to specify the requirements and to provide for identification of the testing necessary to demonstrate that structures, systems, and components perform satisfactorily in service.

Testing as addressed in this section pertains to tests performed on prepurchased equipment and materials and, tests performed by the contractors on installed equipment, components, structures, and systems.

The necessary testing requirements are specified in written procedures which incorporate or reference the acceptance limits contained in design and procurement documents and provide that:

a. Calibrated test instrumentation and equipment is available,

b. Tests are performed under suitable environmental conditions with adequate test methods,

c. Tests are conducted by appropriately trained and qualified personnel,

d. Items which are modified, repaired, and replaced are tested in accordance with the same requirements which were applied to the original items or an approved alternate, and

e. Test results are documented and evaluated to ensure that test requirements have been satisfied.

17.1.1.12 Control of Measuring and Test Equipment

Measures are established to ensure that tools, gauges, instruments, and other measuring and testing devices are identified, controlled, adjusted, and calibrated at intervals necessary to maintain accuracy within specified limits.

Suppliers and site contractors whose activities are quality affecting are required to implement control of measuring and test equipment in accordance with approved procedures. These procedures contain provisions that:

a. Devices are adjusted and calibrated at prescribed intervals against certified standards having valid relationships to nationally recognized standards, or, if no national standard exists, the basis for calibration is documented.

b. Measuring and test equipment is calibrated at specific intervals based on the required accuracy, purpose, extent of use, stability characteristics, and other conditions affecting measurement control.

c. Measuring and test equipment is calibrated against reference standards. Records are maintained and equipment adequately identified to indicate calibration status and usage.

d. When measuring and test equipment is found to be out of calibrations written procedures describe provisions for documenting and evaluating the validity of previous inspections and tests and, for repeating the original inspection or test using calibrated equipment where necessary to establish acceptability of suspect items.

e. Supplier and contractor procedures specified in procurement documents are reviewed and approved prior to starting work.

17.1.1.13 Handling, Storage, and Shipping

Measures are established to control the handling, storage, shipping, cleaning, and preservation of material and equipment to prevent damage or deterioration. Appropriate procedures are prepared in accordance with design specification requirements and manufacturer's instructions to provide for special handling, storage, maintenance, cleaning, and preservation. These activities are accomplished in accordance with approved procedures or instructions.

Where required, procedures address requirements for special protective environments such as inert gas atmosphere, moisture content levels, and temperature levels and require that:

a. Procurement documents establish requirements for handling, shipping, storage, preservation, and maintenance.

b. Items are stored in accordance with their classifications as delineated in Project instructions.

c. Storage areas are monitored to assure that the required storage integrity is maintained.

17.1.1.14 Inspection, Test, and Operating Status

Measures are established to indicate that inspections and tests performed on structures, systems and components are known throughout fabrication, installation and test. Indicators such as tags, stamps, labels, travelers, or other suitable means are utilized to indicate the status of the item. Where required, structures, systems and components such as valves, switches, electrical, and rotating equipment are tagged or locked out to prevent inadvertant use.

Project organizations and contractors involved in inspection, test, and operation of equipment, components, and systems are required to prepare and implement procedures for the control of these items and activities. Procedures include requirements that specified inspections and tests are performed, that application and removal of status indicators are controlled, that bypassing of quality affecting tests and inspections are controlled, and that systems containing inoperative, malfunctioning or nonconforming items, structures, or components are identified and controlled to prevent inadvertant operation.

17.1.1.15 Nonconforming Materials, Parts, or Components

Measures are established for the control of material, parts, components, or services that do not conform to specified requirements.

To prevent inadvertent use or installation, the QAPs of the Project organization, site contractors, subcontractors, and suppliers establish control for identification, documentation, segregation, review, disposition, and notification to affected organizations of non-conforming materials, parts, components, or services.

Written procedures contain provisions:

a. For the handling, processing and dispositioning of nonconforming materials, parts, components, or services,

b. For the identity of the individuals or groups with the authority and responsibility for the review, disposition and approval of nonconforming items,

c. That nonconforming items are identified as such, by the appropriate status indicator and are physically segregated where practical from acceptable items until dispositioned,

d. That rework or repair of nonconforming items be subject to the same, or an equal test or inspection as was originally imposed, or an approved alternate, and the inspection, testing, rework and/or repair activities are documented,

e. That nonconformance reports are reviewed for potential 10 CFR 50.55(e) and Part 21 reportability,

f. For identification and control of conditional released items,

g. That measures are established in procurement documents to require offsite vendors and suppliers to include their nonconformance reports, which deviate from procurement documents, as a part of their Quality Assurance records, and

h. That site contractors and subcontractors document deviations from contract requirements, and nonconformances dispositioned "use-as-is" or "repair" are submitted to the project for review and/or concurrence.

Nonconformance documentation identifies the nonconforming item, describes the nonconformance and the disposition of the nonconformance, identifies any special inspection requirements and the completion of inspection, and contains required signatures/approvals.

Construction Management Contractor Quality Assurance is responsible for the review of these nonconformance reports to ascertain that they have been dispositioned, approved, and closed out.

Reviews include trend studies, corrective action adequacy, and reporting to appropriate levels of management.

The AE is responsible to provide acceptance of disposition for those conditions for which they have assigned technical responsibility. When technical responsibility has not been assigned to the AE, or another design contractor, or when technical requirements are not affected or technical responsibility has been assumed by Energy Northwest, Energy Northwest will provide acceptance of disposition.

17.1.1.16 Corrective Action

Measures are established to provide for the prompt identification, evaluation, and correction of conditions adverse to quality such as nonconformances, failures, malfunctions, deficiencies, deviations, defective material, and equipment.

The QAPs for the project organization and onsite contractors are required to establish provisions:

a. That corrective action is implemented in accordance with procedures,

b. That corrective action for significant conditions adverse to quality identify the cause and include actions to preclude recurrence,

c. That follow-up is performed to verify implementation and close out of corrective action,

d. That for significant conditions adverse to quality, the cause and the corrective action taken are reported to cognizant management levels, and

e. That Corrective Action Reports are reviewed for potential 10 CFR 50.55(e) and Part 21 reportability.

17.1.1.17 Quality Assurance Records

Measures are established to assure that sufficient records are maintained to provide documentary evidence of the quality of items and the activities affecting quality.

Quality Assurance records include:

a. Test logs,
b. Results of reviews of inspection, tests, audits, and material analysis,
c. Surveillance and audit documents,
d. Qualification of personnel, procedures and equipment,
e. Drawings, as-built drawings and specifications,
f. Procurement documents,
g. Calibration procedures and reports, and
h. Nonconformance and corrective action reports.

Inspection and test records contain as applicable:

a. Type of inspection, test, or examination,
b. Identity of inspector or data recorded,
c. Date and results of inspection/test,
d. Acceptability,
e. Action taken relative to deficiencies noted, and
f. Identification with the applicable item or activity.

Suppliers, vendors, and contractors are required to furnish Quality Assurance records prior to or on delivery of equipment, supplies, structures, or systems, or retain them if required by contractual agreement.

Procedures are established and contain provisions for the identification of individuals or groups responsible for record transmittals, retention, and maintenance, and provisions for ensuring that records are identifiable and retrievable.

Record storage facilities are constructed, located and secured to prevent destruction by fire, flooding, theft, and deterioration by extremes in temperature and humidity.

17.1.1.18 Audits

Measures are established to provide a system for conducting audits to verify compliance with all aspects of the QAP and to determine the effectiveness of the program. All aspects include activities associated with:

a. Indoctrination and training programs,
b. Interface control between Energy Northwest and the principal Contractors,
c. Corrective action, calibrating, and nonconformance control systems, and
d. SAR commitments.

The project organizations and principal contractors have established and implemented an audit system which includes objective evaluations of quality-related practices, procedures, activities, and records. The system ensures that the necessary audit functions are performed to preestablished written procedures or checklists, in a planned and systematic manner, and are conducted by trained and qualified personnel who do not have direct responsibility in the areas being audited.

The audit system provides for external audits to be performed, as appropriate, by the home office, project organization, and principal contractors on their suppliers, vendors, and contractors, and internal audits to be performed within each organization.

Audits are planned and scheduled on the basis of the status and safety importance of the activities being performed. They are initiated early enough and performed at regular intervals to ensure the QAP is effectively implemented during design, procurement, manufacture, construction, and installation.

Audits are documented and reviewed with the level of management responsible for the area audited and, where required, follow-up action including reaudit of the deficient areas is performed.

Audit data is evaluated to assure that the QAP is effective and properly implemented and the results are reported to management for review and assessment.

The Energy Northwest CGS quality affecting activities are audited on a scheduled basis by the Energy Northwest home office audit group.

17.1.2 THE BURNS AND ROE, INC. QUALITY ASSURANCE PROGRAM

17.1.2.1 Introduction

The Burns and Roe, Inc. (B&R) QAP for the Energy Northwest Columbia Generating Station (CGS) has evolved during the design and construction of CGS. The original B&R QAP was described in the Atomic Energy Commission accepted Preliminary Safety Analysis Report (PSAR) for CGS, Appendix D.O. This QAP was implemented until February 1978, when Energy Northwest assumed responsibility for Construction Management, Site Quality Assurance, and Vendor Surveillance of selected prepurchased equipment contracts. The B&R QAP was implemented during this phase of the CGS PSAR Deviation Request No. 15 WP. In this phase, B&R was responsible for the AE scope of the engineering and design of CGS and provided experienced Quality Assurance personnel to carry out Energy Northwest's assumed responsibilities. On June 1, 1981 B&R implemented their Quality Assurance Topical Report, B&ROE-COM4-1-NP-2A, approved by the Nuclear Regulatory Commission, with documented exceptions for the B&R engineering and design and procurement activities for CGS.

17.1.2.2 The Burns & Roe, Inc. Quality Assurance Topical Report

The QAP for CGS was implemented by B&R on June 1, 1981 and is based on the B&R Quality Assurance Topical Report with documented exceptions, CGS Final Safety Analysis Report (FSAR) commitments, Energy Northwest direction and the B&R contractual responsibilities for the design and construction of CGS. The B&R responsibilities for the CGS Project are engineering and design, and procurement activities for assigned prepurchased equipment contracts. The exceptions to the Quality Assurance Topical Report are identified in the following subparagraphs.

17.1.2.3 Exceptions to the Burns & Roe, Inc. Quality Assurance Topical Report

17.1.2.3.1 Chapter I - Organization

Paragraph 4.1.2

The B&R CGS Project Organization chart is shown as Figure 17.1-4.

Paragraph 4.3

Construction Management is not within B&R scope of services.

17.1.2.3.2 Chapter II - Quality Assurance Program

Paragraph 2.1

The US NRC Regulatory Guides applicable to CGS are identified in Section 1.8.3 of the CGS FSAR.

Paragraph 4.6

Under the B&R CGS QAP, satisfactory accomplishment of the following quality affecting functions shall be verified:

a. The design process is accomplished in accordance with established procedures.

b. Specifications contain appropriate quality requirements.

c. For those prepurchased equipment contracts for which Burns and Roe performs the vendor surveillance function:

1. Contractors' QAPs and procedures are adequate,

2. Nonconformances are identified and dispositions provided, and

3. Material receiving, inspection, and storage functions are performed in accordance with established procedures.

d. Surveillance of the activities performed by Contractors whose sole function is to provide engineering and design services.

e. Audits of the quality affecting activities described above are performed on a scheduled basis.

17.1.2.3.3 Chapter III - Design Control

Paragraph 2.1

10 CFR 50, Appendix B and ANSI N45.2 are the basis for the B&R design control program.

Paragraph 4.1

The detailed design effort is based only on an approved project criteria document.

Paragraph 5

Additional design reviews/verifications have been performed on a sampling of previously issued system designs by the performance of special design reviews in accordance with project procedure WNP-2-ED-013.

Burns & Roe, Inc. procedures for design control have been upgraded to verify that future issued designs and modifications comply with applicable codes, standards, and design requirements.

17.1.2.3.4 Chapter IV - Procurement Document Control

Paragraph 3.4

Records to be retained, controlled and maintained by a supplier are not identified in the specification.

Paragraph 4

The appropriate commercial requirements are established by Energy Northwest and/or B&R and may be incorporated during the initial preparation of the technical specification. Energy Northwest prepares the potential bidders list.

Paragraph 5

Award is determined by Energy Northwest using the bid evaluation prepared by B&R.

Paragraph 6

Technical specifications are not normally conformed. When technical specifications are conformed, the changes are reviewed and approved in accordance with the same procedure used for the original technical specification.

Paragraph 7

Later procurement of spare or replacement parts shall be to the original or improved technical requirements. Impositions of Quality Assurance requirements will be in accordance with the Quality Assurance requirements of the existing specification for procurement of components

which are added to existing contracts. The latest CGS Project Quality Programs are imposed on new procurements.

17.1.2.3.5 Chapter V - Instructions, Procedures, and Drawings

Paragraph 2.2

Burns and Roe, Inc. review of Quality Assurance plans required by procurement documents is limited to those prepurchased contracts for which B&R performs the vendor surveillance function.

Paragraph 2.5

Burns and Roe verification of the implementation of instructions, procedures, and drawing programs is limited to those prepurchased contracts for which B&R performs the vendor surveillance function.

17.1.2.3.6 Chapter VI - Document Control

Paragraph 2.1

The B&R CGS QAP, in regard to document control, does not govern the following:

a. Procurement documents, except for prepurchased equipment contracts for which B&R performs the vendor surveillance function,

b. Quality Assurance plans, except for the B&R Quality Assurance Plan and the quality assurance plans prepared by prepurchased equipment contracts for which B&R performs the vendor surveillance function,

c. Contractor manufacturing, inspection, and testing procedures, except for those prepared by prepurchased equipment contracts for which B&R performs the vendor surveillance function,

d. Construction and operational test procedures, and

e. Nonconformance reports, except for those prepared by prepurchased equipment contracts for which B&R performs the vendor surveillance function.

Paragraph 2.3

Changes to documents listed in Paragraph 2.1 may be made and implemented prior to the official revision of the document provided an advance change system exists and is controlled by approved project instruction and/or procedures.

Paragraphs 2.6 and 2.7

Burns and Roe verification of Contractor's document control programs is limited to those prepurchased contracts for which B&R performs the vendor surveillance function.

17.1.2.3.7 Chapter VII - Control of Purchased Material, Equipment, and Services

Paragraph 3

Recommended bidder lists are not prepared by B&R.

Paragraph 4.2

Quality Assurance audits are performed after contract award.

Paragraph 4.3

Recommendations for award are made by project management to Energy Northwest and Energy Northwest approves and makes the award.

Paragraph 4.4

Records of B&R bid evaluations and recommendation are only maintained by B&R for the supplier selection process.

Paragraphs 5 and 6

Surveillance plans are approved by the Manager of Vendor Surveillance and are subject to Project Quality Assurance review.

Paragraphs 6.3 and 7

Not applicable to B&R CGS QAP.

17.1.2.3.8 Chapter VIII - Identification and Control of Material Parts and Components

Paragraph 2.1

Verification of identification of components, assemblies and subassemblies is performed by B&R only on prepurchased contracts for which B&R performs a final inspection prior to shipment.

17.1.2.3.9 Chapter IX - Control of Special Processes

Paragraphs 2.5 and 2.6

Only when performing the function of vendor surveillance on prepurchased contracts does B&R evaluate and verify a Contractor's special process control program.

17.1.2.3.10 Chapter X - Inspection

Paragraph 2.1

The applicability of US NRC Regulatory Guides is as committed in Section 1.8.3 of the CGS FSAR. Mandatory hold points for prepurchased contracts are established after contract award and are contained in the Vendor Surveillance Plan for each Contract.

Paragraph 2.4

Verification that the contractor's inspection program is being effectively implemented is accomplished by a series of surveillances and audits performed by quality assurance personnel for those prepurchase contracts which Burns and Roe has retained the vendor surveillance function.

17.1.2.3.11 Chapter XI - Test Control

Paragraph 2.1

The applicability of US NRC Regulatory Guides are as committed in Section 1.8.3 of the CGS FSAR.

Paragraph 2.6

Verification of the implementation of a Prepurchase Contractor's test control program is performed by B&R for prepurchased contracts when B&R performs the vendor surveillance function.

17.1.2.3.12 Chapter XII - Control of Measuring and Test Equipment

Paragraph 2.3

Selected prepurchase contractor programs for the control of measuring and test equipment are subject to engineering review and approval by B&R.

Paragraph 2.4

Verification that the program for the control of measuring and test equipment is being effectively implemented is ensured by a series of surveillances and audits performed by quality assurance personnel for those prepurchase contracts which Burns and Roe has retained the vendor surveillance function.

17.1.2.3.13 Chapter XIII - Handling, Storage, and Shipping

Paragraph 2.3

Only selected prepurchase contractor programs for the control of handling, preservation, storage, cleaning, packaging, and shipping of items are subject to review and approval by Burns and Roe, Inc. personnel. This procedurally controlled and documented review is the responsibility of the cognizant system or component engineer and includes review by a quality assurance engineer. Project management, based on comments generated during the review, makes an approval determination.

Paragraph 2.4

Not applicable to B&R CGS QAP.

Paragraphs 2.5, 2.6, and 2.7

These requirements are applicable to those prepurchased contracts for which B&R performs the vendor surveillance function.

Paragraph 2.8

Verification of the implementation of Contractor programs for handling, storage, and shipping is performed by B&R only for prepurchased contracts when B&R performs the vendor surveillance function.

17.1.2.3.14 Chapter XIV - Inspection, Test, and Operating Status

Paragraph 2.3

Not applicable to B&R CGS QAP.

Paragraph 2.4

Selected prepurchase contractor programs for inspection, test, and operating status are subject to engineering review and approval by B&R, for prepurchased contracts which B&R has retained by vendor surveillance function.

Paragraph 2.5

Verification that the inspection, test, and operating status program is being effectively implemented is ensured by a series of surveillances and audits performed by quality assurance personnel for prepurchased contracts which B&R has retained the vendor surveillance function.

17.1.2.3.15 Chapter XV - Nonconforming Materials, Parts, or Components

Paragraph 2.2

Nonconformance reports are not included in final data packages forwarded to B&R. Nonconformance reports on the CGS Project are not issued or analyzed for quality trends by B&R.

Paragraph 2.3

Selected prepurchase contractor nonconformance control programs are subject to engineering review and approval by B&R.

Paragraph 2.4

All nonconformance reports for those conditions for which B&R has the assigned technical responsibility require engineering review and approval by B&R. Such dispositioned nonconformance reports must be concurred in by the B&R Quality Assurance Manager or designated Quality Assurance Engineers.

Paragraph 2.5

Not applicable to the B&R CGS QAP.

17.1.2.3.16 Chapter XVI - Corrective Action

No deviations.

17.1.2.3.17 Chapter XVII - Quality Assurance Records

No deviations.

17.1.2.3.18 Chapter XVIII - Audits

Paragraph 2.10

Not applicable to B&R CGS QAP.

Paragraph 2.11

The audit program on material and equipment suppliers applies only to those prepurchased contracts for which B&R performs the vendor surveillance function.

17.1.3 GENERAL ELECTRIC COMPANY QUALITY ASSURANCE PROGRAM

The applicable QAP and detailed procedures of the CGS NSSS and fuel have evolved during the design and construction phases of the CGS plant. The original GE program for CGS was implemented in 1968 and is described in the PSAR, Appendix D. The program at that time was in accordance with the Nuclear Energy Division (NED) quality objectives for safety and reliable systems and components as set forth in the "Blue Book" issued August 20, 1968. On October 1, 1969, the "Blue Book" was replaced with the "Green Book", Revision 0, which incorporated the intent of the then "Proposed Atomic Energy Commission (AEC) Quality Assurance (QA) Criteria." The "Green Book" has proceeded through several revisions since 1969. The latest revision is NEDO-11209-04A, dated October 1980. Table 17.1-1 is a matrix showing the entire evolutionary process which the GE program has undergone since August 1968 and identifies related NRC and industry standards that were applied. The actual version in effect at any point in time controlled the QA measures applied to CGS by GE for work when it was initiated, consistent with any necessary contractual adjustments to update from the 1970 base date of the contract with Energy Northwest. For example, any work initiated after March 1978, applies the criteria represented by "Green Book" (NEDO-11209-04A). Note that those portions dealing with the Standard Reactor Island (STRIDE) are not applicable to CGS in that CGS is not provided a STRIDE by GE.

In so far as the NSSS is concerned, GE positions and commitments to regulatory guides and ANSI Standards, as made in the applicable revisions of NEDO-11209, take precedence over the positions and commitments described in the FSAR Chapter 3.

17.1.4 BECHTEL POWER CORPORATION QUALITY ASSURANCE PROGRAM

17.1.4.1 Quality Assurance Topical Report

The Bechtel QAP Plan for use by the Bechtel Power Corporation during Construction Management and System Completion of Energy Northwest Project CGS is described in the NRC-approved Bechtel Topical Report BQ-TOP-1, Revision 3A, Bechtel Quality Assurance Program for Nuclear Power Plants.

17.1.4.2 Scope of Responsibility

This section describes Bechtel responsibilities for providing quality-related services in Construction Management and Systems Completion to Energy Northwest on the CGS Project. The scope of responsibility differs from that indicated in BQ-TOP-1 in that Bechtel does no function as the responsible design engineering organization. Therefore, those provisions in BQ-TOP-1 associated with design engineering do not apply.

Bechtel will have an engineering management group under the direction of the Project Engineering Manager. This group will provide engineering management staff support capability to Energy Northwest. Engineering personnel will assist in developing the scope and relative priority of remaining engineering activities and will interface with Energy Northwest licensing personnel. Bechtel may perform engineering design assignments on a task basis. Such design tasks will meet design requirements established by the AE (B&R) and will be performed to the applicable requirements of BQ-TOP-1.

Bechtel will perform construction in the completion of systems, structures, components as assigned by Energy Northwest, utilizing materials provided by Energy Northwest.

Construction Management provisions for quality-related services include:

a. Receiving, including receipt inspection of Energy Northwest purchased items,

b. Storage and maintenance of Energy Northwest purchased items,

c. Contractor/vendor QA documentation review, retention, and turnover to the Energy Northwest,

d. Review and approval of onsite contractor quality-related procedures and manuals,

e. QA/QC audit and surveillance inspection over onsite contractor activities,

f. Administration of the project program for controlling nonconforming items,

g. Administration of the project program for control of design documents, and

h. Procurement services, including procurement supplier quality services, in support of construction activities.

17.1.4.3 Project-Unique Modification to BQ-TOP-1, Revision 3A

a. Introduction, Page 3 - Replace Regulatory Guide 1.58 (August 1973) with Regulatory Guide 1.58, Revision 1 (September 1980).

b. Introduction, Page 3 - Add Regulatory Guide 1.146 "Qualification of Quality Assurance Program Audit Personnel for Nuclear Power Plants" (Revision 0, 1978). See Section 1.8.3 for compliance statement.

c. Introduction, Page 3 - Replace ANSI Standard N45.2.12-1974 with Regulatory Guide 1.144, "Auditing of Quality Assurance Programs for Nuclear Power Plants" (Revision 1, 1980). See Section 1.8.3 for compliance statement.

d. Section 1, Organization, Subsection 1.5.1, Page 10 - Replace Subsection 1.5.1 with Attachment 1.

e. Section 1, Organization, Subsection 1.5.2, Page 10 - Replace Subsection 1.5.2 with Attachment 2.

f. Section 1, Organization, Subsection 1.5.4, Page 11- Replace Subsection 1.5.4 with Attachment 3.

g. Section 2, Quality Assurance Program (Subparagraphs 2 and 4), Page 23 - Change Regulatory Guide 1.58 (August 1973) to Regulatory Guide 1.58, Revision 1 (September 1980).

h. Section 2, Quality Assurance Program (Subparagraph 3), Page 23 - Change ANSI N45.2.12 to ANSI N45.2.23.

i. Change "Project Engineer" to "Project Engineering Manager" throughout.

j. Table 1, "Bechtel Quality Program Documents", Page 57 and 58 - Add to Table 1 the Project Documents shown on Attachment 4.

k. Add Figure 15, Bechtel Projects Management Organization, Attachment 5.

l. Add Figure 16, Quality Assurance/Quality Control Organization, Attachment 6.

m. *Appendix A, Bechtel Position on QA NRC Regulatory Guides and ANSI Standards - Delete 5th paragraph (A-7) on Page A-1; Delete pages A-7 through A-13 entirely. Delete 11th paragraph (A-22) on Page A-1; delete Pages A-22 and A-23 entirely.*

n. *Appendix B, Division Quality Policies, Scope, and Relationship to 10 CFR 50, Appendix B - Add Project Nuclear Quality Assurance Manual as shown by Attachment 7.*

ATTACHMENT 1

The Manager of Projects (Attachment 5) is the senior Bechtel representative assigned to the CGS Project. The Manager of Projects reports to the Division Manager of Project Operations and is responsible for providing overall project direction to ensure the consistent and coordinated application of Bechtel policies and skills for the benefit of the CGS Project. The Manager of Project's staff includes a Deputy Manager of Projects and other managers to coordinate activities in labor relations, the quality program, and administrative services.

ATTACHMENT 2

QUALITY ASSURANCE

The SFPD QA Manager (SFHO) is independent of the other managers within the division and has the authority to carry out the responsibilities listed below in directing the Division QAP. He is assisted by a staff of Quality Assurance Managers (SFHO) assigned to functional areas of Program, Technical Services, Training, Project QA, and Audit. The SFPD QA Manager's (SFHO) functions for the CGS Project include:

a. Provide technical guidance and concurrence for the CGS Project QAP for conformance with the requirements of 10 CFR 50, Appendix B;

b. Formulate and approve Division Quality Assurance Department Procedures which define responsibilities, authority, and functions of SFPD home office staff Quality Assurance Department personnel. Review and concur with the CGS PQAM and revisions;

c. Maintain an awareness of CGS project status, through management audit and day-to-day contact with the Manager of Quality, and provide assistance to the Manager of Quality to ensure timely and effective implementation of the CGS QAP;

d. Formulate and conduct management QA audits to assure compliance with the CGS Nuclear Quality Assurance Manual (NQAM) and implementing procedures, and identify quality problems; identify the need for corrective action and initiate, recommend, coordinate or provide solutions; and verify implementation of solutions and corrective actions;

e. Provide and maintain a qualified and suitably trained staff of Quality Assurance Engineers to carry out required project and staff functions. Assign Quality Assurance Engineer(s) to the CGS project and provide them with administrative direction through the QA Manager - Projects (SFHO);

f. Formulate and implement programs to provide indoctrination and training of Quality Assurance Department Personnel to ensure that suitable proficiency is maintained; and

g. From information supplied by the Manager of Quality, provide quarterly reports to the Division Manager and Manager of Quality Assurance, evaluating the status and adequacy of the WNP-BPC QAP, and advising of any problems requiring program revision or special attention including recommendations for corrective actions. At least annually, a meeting is held with the Division

Manager (SFHO) and his staff on the subject of status and adequacy of the Division QAP. The Manager of Quality participates in this meeting to cover the status and adequacy of the CGS QAP.

MANAGER OF QUALITY

The Manager of Quality receives administrative, technical, and project direction from the Manager of Projects, and is responsible for the project and technical direction of the CGS QAP. The Manager of Quality receives technical guidance for QA and QC from the SFPD QA Manager (SFHO) and Chief Construction Quality Control Engineer (SFHO) respectively. He is assisted by, and provides project and technical direction to the Project Quality Assurance Engineer and Project Construction Quality Control Engineer (Attachment 6). The Manager of Quality is independent of the other line managers within the Project Management organization and has the authority to carry out the responsibilities listed below in directing the QAP including authority to stop work or control further processing. The Manager of Quality's functions include:

a. *Provide technical and project direction to Quality Assurance Engineers assigned to the Energy Northwest projects;*

b. *Formulate and approve, after review and concurrence by the SFPD QA Manager (SFHO) the Energy Northwest Projects SAR and QAPs as defined in the Energy Northwest Project's NQAMs. The NQAMs shall be in conformance with the requirements of 10 CFR 50, Appendix B, the TPO Quality Program Policy Manual, and the appropriate Project SAR;*

c. *Formulate and approve, after review and concurrence by the SFPD QA Manager (SFHO) the revisions to the Energy Northwest Projects SARS and NQAMs. Coordinate revisions to implementing procedures to improve effectiveness of the QAP and update the program;*

d. *Formulate and approve, after review and concurrence by the SFPD QA Manager (SFHO) the Project Quality Assurance Department Procedures and revisions for Energy Northwest Projects which define responsibilities, authority, and functions of Energy Northwest Projects Quality Assurance personnel;*

e. *Review quality-related procedures and manuals prepared by centralized support functions outside of the Division (e.g., Procurement, C&S, M&QS) to verify conformance with requirements of the Energy Northwest Projects NQAMs and approve, through the Manager of Quality Assurance BPC, for use as part of the QAP on the Energy Northwest projects;*

f. Maintain an awareness of project status, through contact with the Manager of Projects and ensure timely and effective implementation of the QAP;

g. Direct the performance of project audits to ensure compliance with Energy Northwest projects NQAMs and implementing procedures, and to identify quality problems; identify the need for corrective action and initiate, recommend, coordinate or provide solutions; and verify implementation of solutions and corrective actions;

h. Provide quarterly reports to the SFPD QA Manager (SFHO) evaluating the status and adequacy of the Energy Northwest projects QAP and advising of any problems requiring program revision or special attention, including recommendations for corrective actions;

i. Review Division standard criteria for specifying QAP requirements applicable to contractors and subcontractors, and approve for use on the Energy Northwest projects; and

j. Coordinate the Quality Assurance and Quality Control functions for the Energy Northwest Projects with the Division groups having quality functions, and with groups outside the Division having quality functions, e.g., M&QS, C&S, and PSQD.

ATTACHMENT 3

DIVISION CONSTRUCTION

The Manager of Division Construction provides technical and administrative direction of the Construction Department personnel. The Manager of Division Construction (SFHO) is assisted by CMs (SFHO), Chief Construction Engineers (SFHO), where assigned, and the Chief Construction Quality Control Engineer (SFHO). Construction Managers (SFHO) are responsible for the management and technical direction of assigned projects, and for ensuring that construction projects are provided with appropriate personnel and are following prescribed division practices and procedures for conduct of construction activities. Chief Construction Engineers (SFHO) are responsible for providing division standard work procedures to the projects.

Formal quality verification inspection and onsite contractor surveillance inspection activities performed by Bechtel are the responsibility of Construction Quality Control. The Chief Construction Quality Control Engineer (SFHO) is responsible for providing administrative direction to the Construction Quality Control Engineers assigned to the CGS Project. The Chief Construction Quality Control Engineer's functions include:

a. Provide administrative direction to the Project Construction Quality Control Engineer,

b. Assign quality control engineers to the project,

c. Assist with the training and qualification of construction quality control engineers, and

d. Provide technical guidance to the Manager of Quality for the preparation of quality control procedures and instructions.

ATTACHMENT 4

PROJECT QUALITY PROGRAM DOCUMENTS

Documents	*Originating Authority*	*Review for QA Policy and Program Requirements*	*Authorizing Approval*	*Contents*
Nuclear Quality Assurance Manual (NQAM)	*Project QA Engineer*	*SFPD QA Manager (SFHO)*	*Manager of Quality*	*Quality program policy. Based on Division policy as contained in SFPD Standard NQAM*
Project QA manual (PQAM)	*Project QA Engineer*	*SFPD QA Manager (SFHO)*	*Manager of Quality*	*Procedures for conducting Project QA activities*
Construction Quality Control Manual (CQCM)	*Project Construction*	*Project QA Engineer*	*Manager of Quality*	*Responsibilities and procedures for construction QC activities*
Construction Procedures	*Project Field Engineer*	*Project QA Engineer*	*Chief Construction Engineer (SFHO)*	*Responsibilities and requirements for construction site activities*
Bechtel Quality Assurance Manual ASME Nuclear Components	*Manager of Codes and Standards*	*Manager of Quality and SFPD - QA Manager (SFHO)*	*President - BPC and appropriate authorized code inspection agency*	*Policies and procedures for overall Bechtel Program applicable to ASME work*
Engineering Department Project Instructions	*Project Engineering Manager*	*Project QA Engineer*	*SFPD Engineering Manager*	*Responsibilities and requirements for engineering departments activities*
Field Procurement Procedures [individual jobsite instructions (IJI)]	*Project Field Procurement Manager*	*Project QA Engineer*	*Manager of Field Procurement*	*Responsibilities and requirements for field procurement activities*
Procurement Supplier Quality Manual	*Manager Procurement Supplier Quality*	*Manager QA - BPC*	*Manager Procurement Supplier Quality*	*Procedures for procurement, supplier quality activities*
Field Procurement	*Manager Field Procurement*	*Manager QA - BPC*	*Manager Field Procurement*	*Procedures for field procurement activities*

ATTACHMENT 5

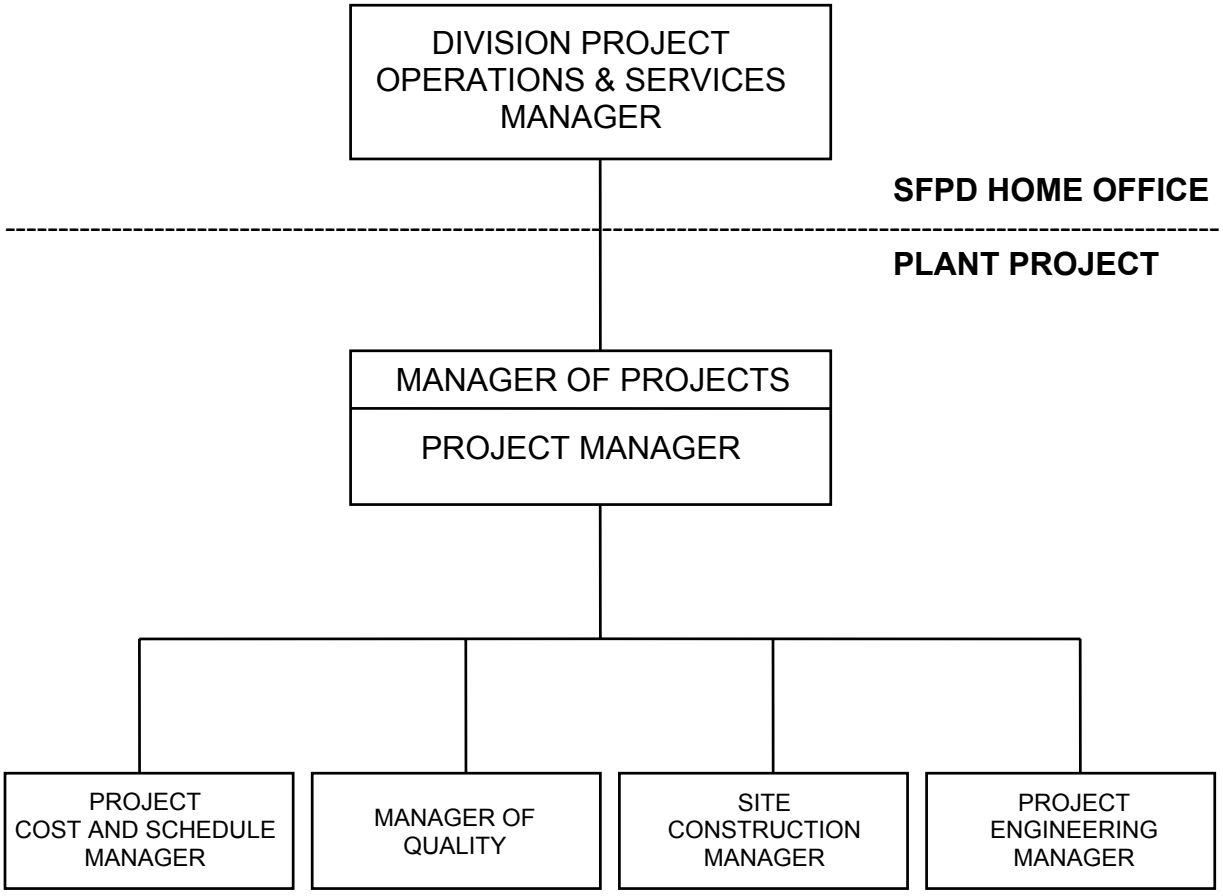

ATTACHMENT 6

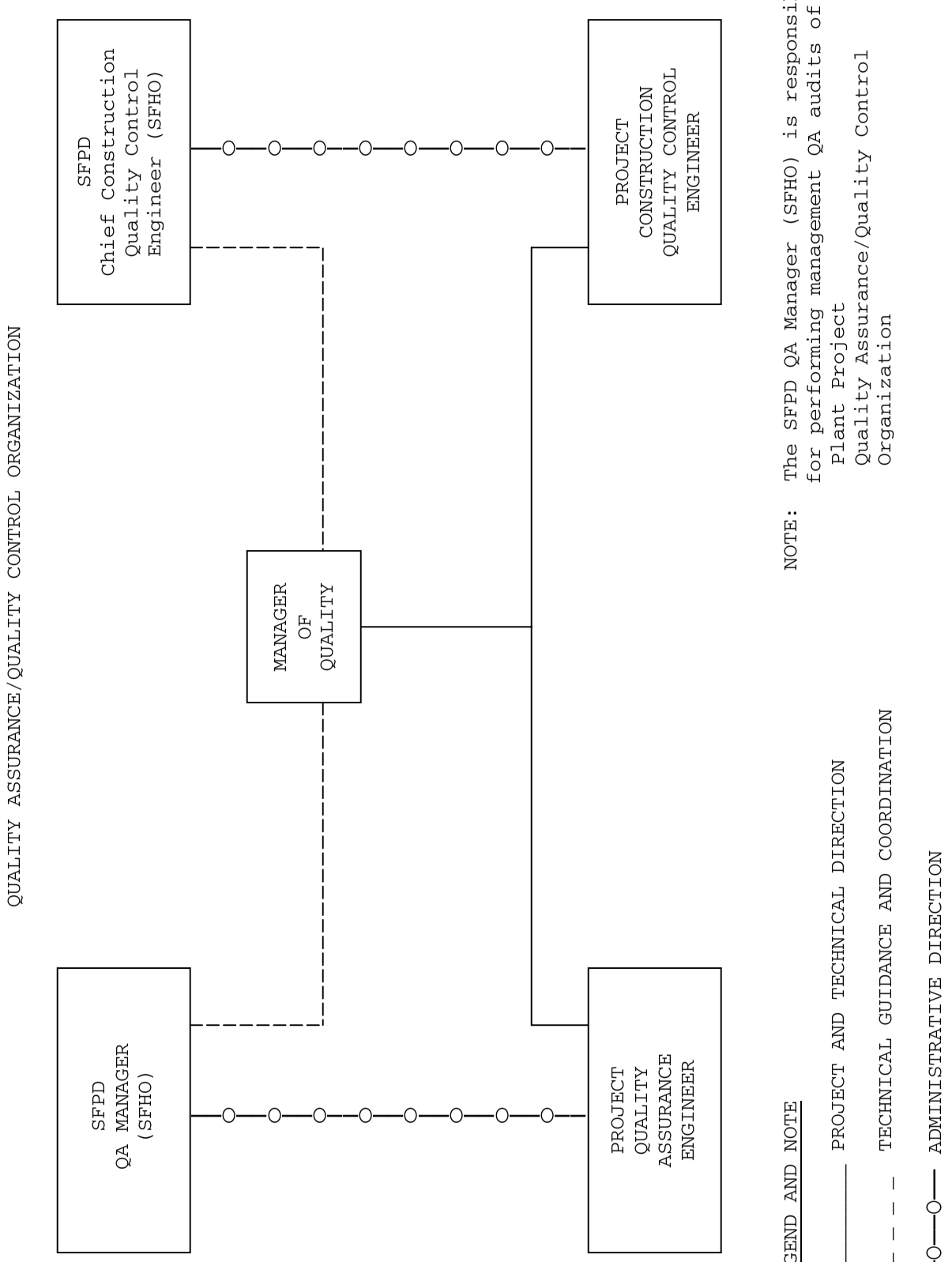

ATTACHMENT 7

APPENDIX B
DIVISION QUALITY POLICIES, SCOPE, AND RELATIONSHIP
TO 10 CFR 50, APPENDIX B
NUCLEAR QUALITY
ASSURANCE MANUAL

SAN FRANCISCO POWER DIVISION		Table of contents	QA Program Applicability	QA Program Definition	Definitions	Fire Protection QA Program	Radwaste Management System QA Program	Seismic II/I QA Program	Matrix	Organization Charts	SFPD Organization	Project QA Team	Project Management Team	Project Engineering Team	Project Construction Team	Project Organization Charts	Procurement Department	Materials & Quality Services Department	Bechtel Power Corporation	Construction Department	Design Control Procedures	Design Process and Change Control	Design Verification	Design Interface	Specialty Group Design Control	Supplier Evaluation	Field Procurement	Supplier Control & Source Surveillance	Supplier Document Processing	Construction Site Quality Program	Mat'l Rec, Stor, Maint, Hand, & Cont.	Field Inspection and Test	Nonconforming Materials	Control of Measuring and Test Equipment	System T/O for Preoperational Testing	Field Contractor/Subcontractor Control	Control of Special Processes	NQAM Policies and Revisions	Quality Assurance Procedures	Indoctrination, Training & Qualification	Management Corrective Action	Stop Work	Procedure Control	Quality Assurance Records	Quality Action Requests	Status and Adequacy Review	Quality Audit System
		1	2	3	4	5	6	7	8	1	2	3	4	5	6	7	8	9	10	11	1	2	3	4	5	1	2	3	4	1	2	3	4	5	6	7	8	1	2	3	4	5	6	7	8	9	1
10CFR50 APP. B CRIT.	SUBJECT	SECTION 0								SECTION I											SECTION II					SECTION III				SECTION IV								SECTION V									SECTION VI
I	ORGANIZATION		●	●	●					●	●	●	●	●	●	●	●	●	●	●											●																
II	QUALITY ASSURANCE PROGRAM		●	●						●											●									●	●	●		●			●	●	●						●	
III	DESIGN CONTROL																				●	●	●	●	●																						
IV	PROCUREMENT DOCUMENT CONTROL																									●	●																				
V	INSTRUCTIONS, PROCEDURES, AND DRAWINGS			●																	●									●									●	●			●				
VI	DOCUMENT CONTROL			●																	●									●													●				
VII	CONTROL OF PURCHASED MATERIAL, EQUIPMENT, AND SERVICES																									●	●	●			●	●	●			●							●				
VIII	IDENTIFICATION AND CONTROL OF MATERIALS, PARTS AND COMPONENTS																														●		●													
IX	CONTROL OF SPECIAL PROCESSES																																				●										
X	INSPECTION																											●	●			●				●	●										
XI	TEST CONTROL																						●									●				●										
XII	CONTROL OF MEASURING AND TEST EQUIPMENT																																	●													
XIII	HANDLING, STORAGE AND SHIPPING																													●	●					●										
XIV	INSPECTION, TEST, AND OPERATING STATUS																															●			●											
XV	NONCONFORMING MATERIAL, PARTS OR COMPONENTS																																●									●				
XVI	CORRECTIVE ACTION																				●												●							●				●			
XVII	QUALITY ASSURANCE RECORDS																												●														●			
XVIII	AUDITS																																						●								●

Table 17.1-1

General Electric Quality Assurance Evolutionary Process

Date of Effectiveness	*NED Quality Objectives - Safe and Reliable Systems and Components*	*Intent of Proposed AEC QA Criteria*	*Intent of 10 CFR 50 Appendix B (proposed)*	*10 CFR 50 Appendix B*	*ANSI N45.2*	*AEC Regulatory Guide 1.28*	*ASME B&P Code*	*QA Related Regulatory Guide and ANSI Standards*
8/20/68	*Blue Book*							
10/1/69	*Green Book Rev. 0*	*X*						
5/1/70	*Green Book Rev. 1*	*X*						
9/15/71	*Green Book Rev. 2*		*X*					
6/1/72	*Green Book Rev. 3*			*X*	*X*			
3/1/73	*Green Book Rev. 4 (NEDO-11209)*			*X*	*X*			
5/7/74	*Green Book Rev. 5 (NEDO-11209-01)*			*X*	*X*	*X*	*X*	*X*
12/12/75	*Green Book (NEDO-11209-02)*			*X*	*X*	*X*	*X*	*X*
11/76	*Green Book (NEDO-11209-03A)*			*X*	*X*	*X*	*X*	*X*
3/31/78	*Green Book (NEDO-11209-04A)*			*X*	*X*	*X*	*X*	*X*
10/80	*Green Book (NEDO-11209-04A)*			*X*	*X*	*X*	*X*	*X*

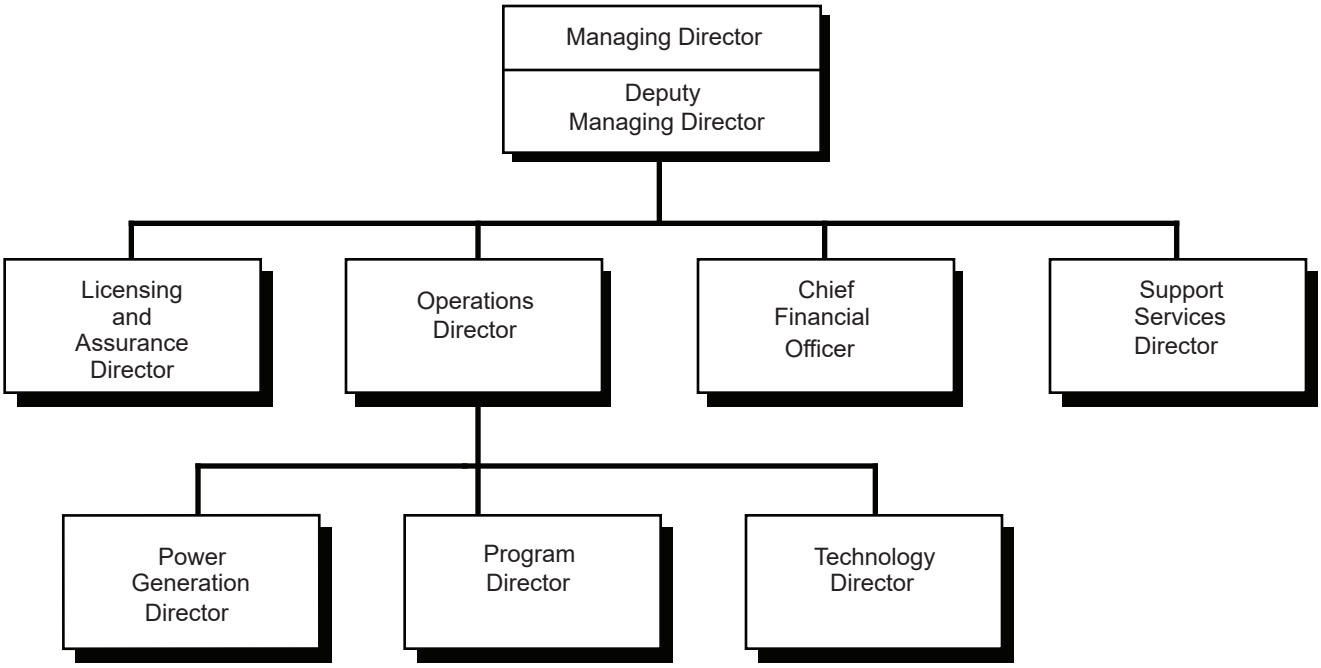

Columbia Generating Station
Final Safety Analysis Report

Energy Northwest Organization Chart

Draw. No. 960222.79	Rev.	Figure 17.1-1

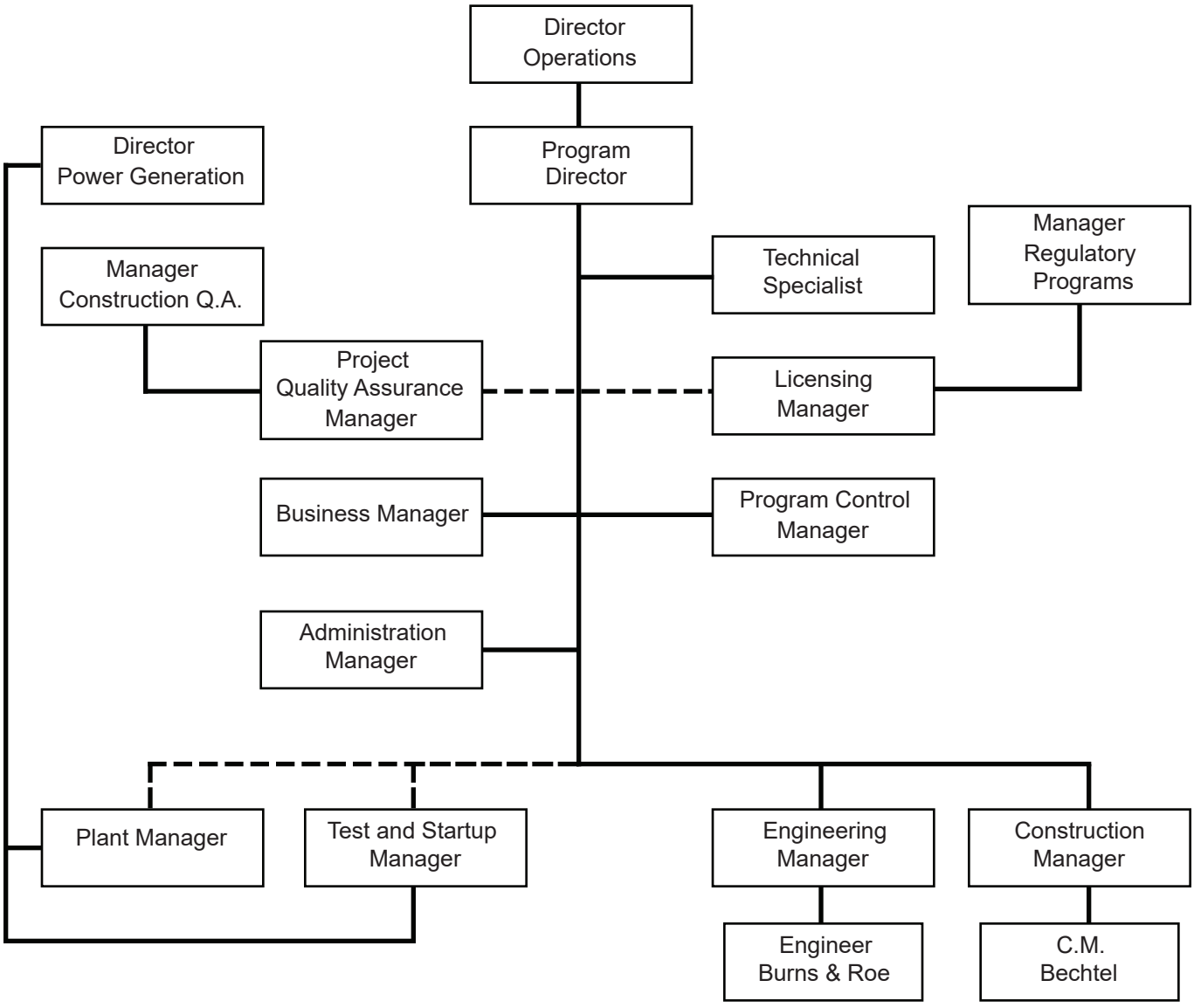

Columbia Generating Station
Final Safety Analysis Report

Energy Northwest CGS Organization Chart

Draw. No. 960222.80	Rev.	Figure 17.1-2

Form No. 960690

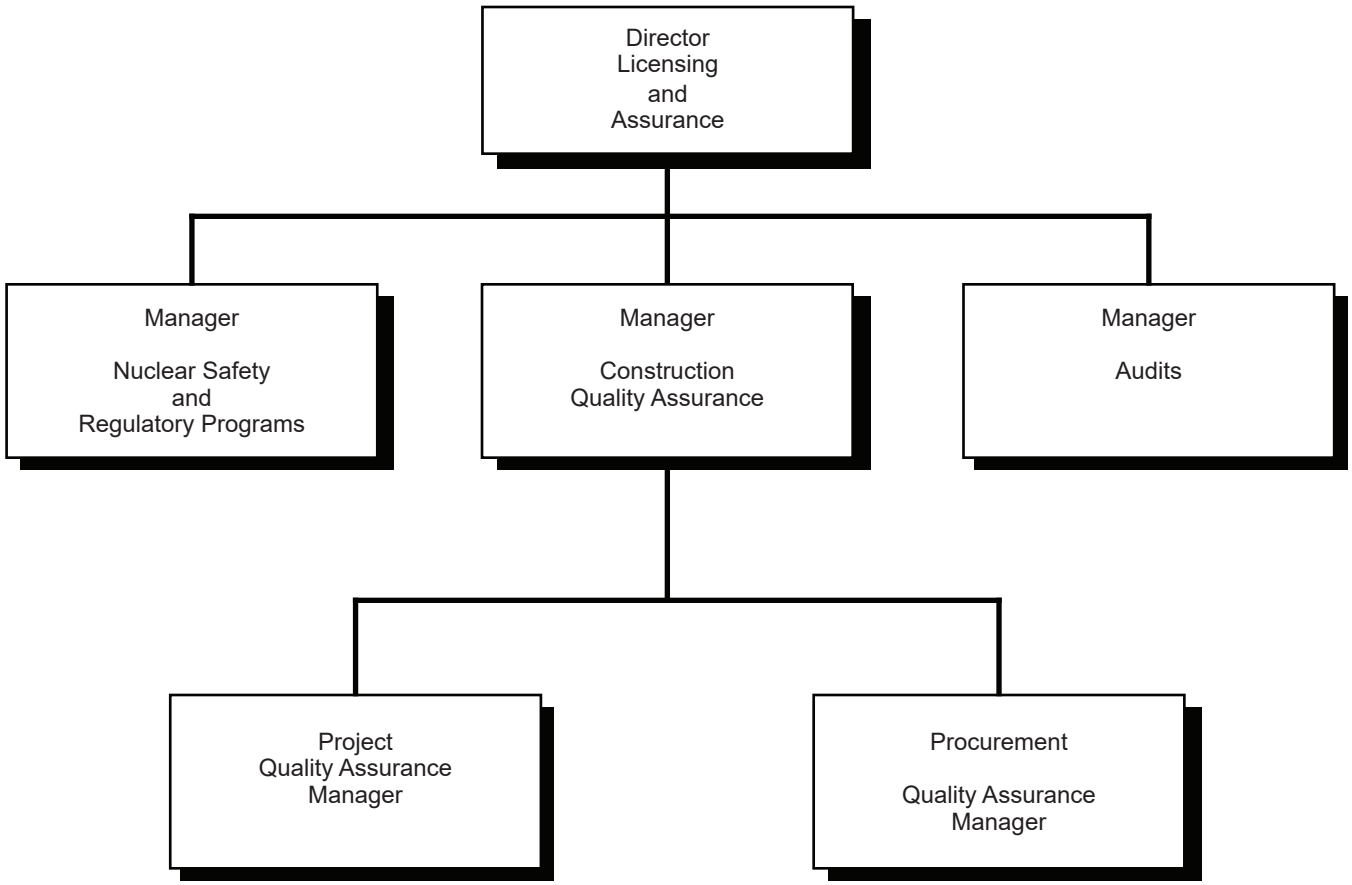

Columbia Generating Station
Final Safety Analysis Report

CGS Project Management Organization Chart

Draw. No. 960222.81	Rev.	Figure 17.1-3

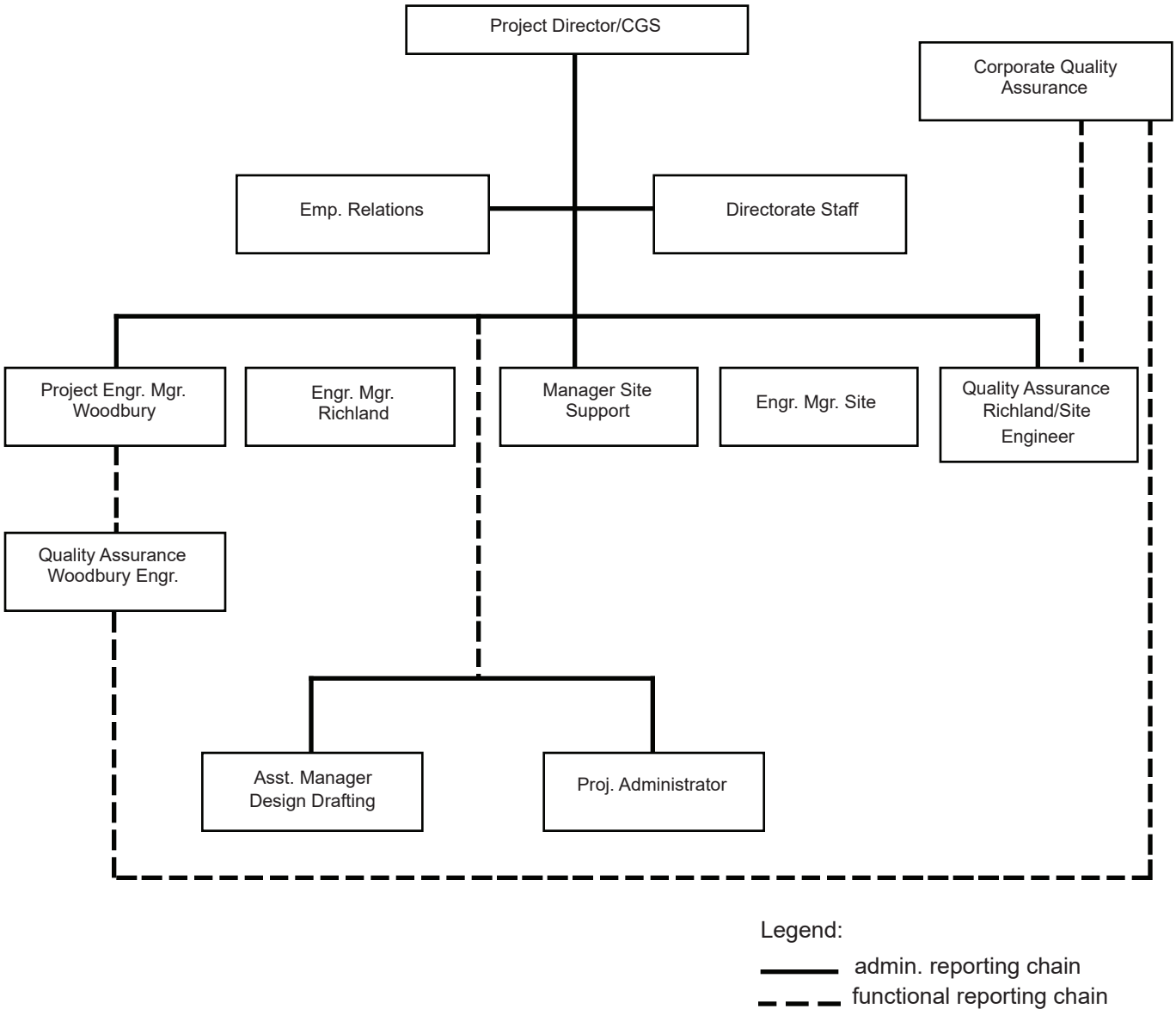

Columbia Generating Station
Final Safety Analysis Report

Burns and Roe, Inc. CGS Organization Chart

Draw. No. 960222.82	Rev.	Figure 17.1-4

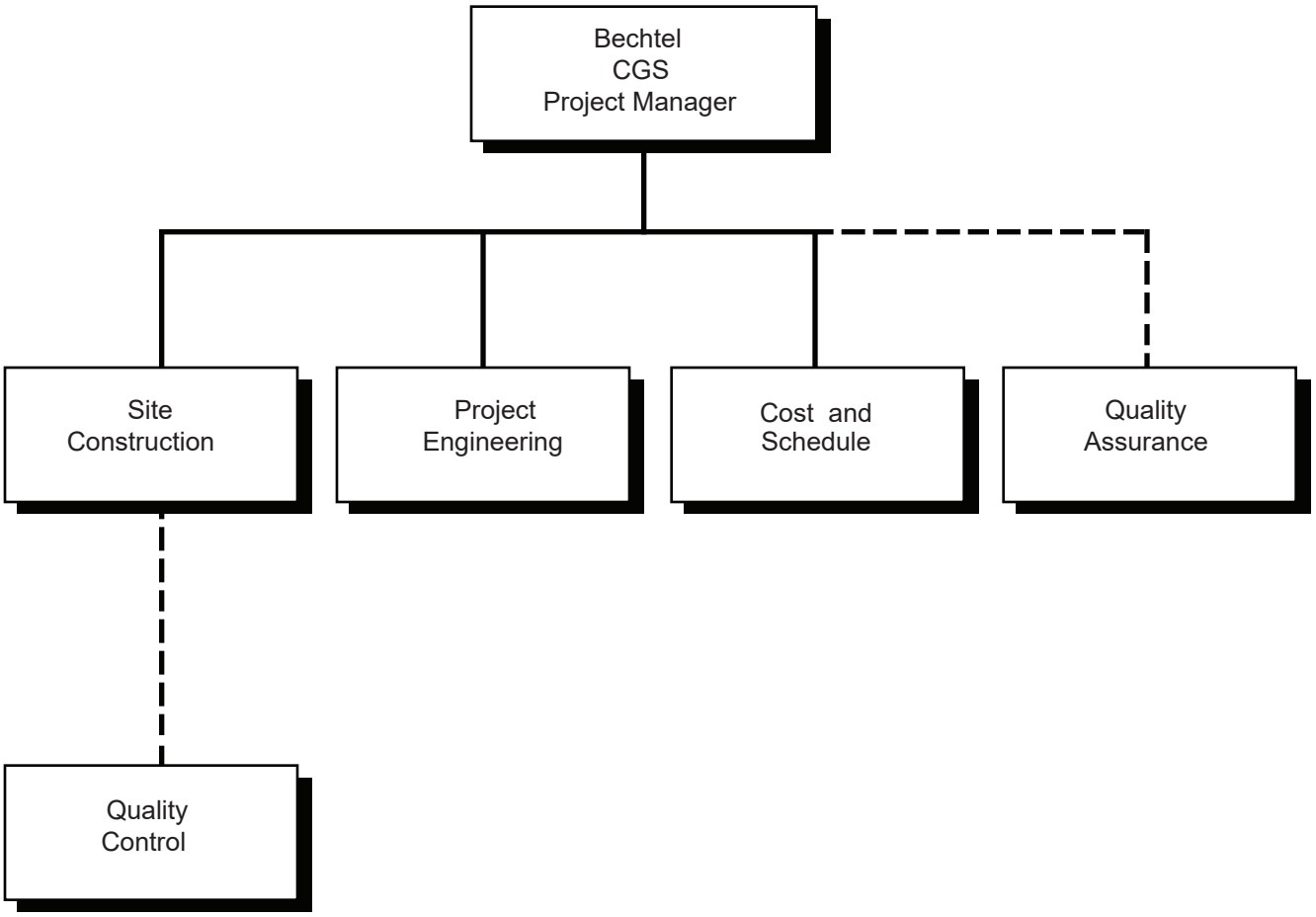

Columbia Generating Station Final Safety Analysis Report	Bechtel CGS Organization Chart		
	Draw. No. 960222.83	Rev.	Figure 17.1-5

17.2 QUALITY ASSURANCE DURING THE OPERATIONS PHASE

The CGS program for quality assurance during the operations phase is provided separately in the Energy Northwest Operational Quality Assurance Program Description (EN-QA-004).

Appendix A

SUPPLEMENT
AGING MANAGEMENT PROGRAMS AND ACTIVITIES CREDITED FOR COLUMBIA LICENSE RENEWAL

TABLE OF CONTENTS

Section — Page

A.0 FINAL SAFETY ANALYSIS REPORT SUPPLEMENT A.1-1

A.1 INTRODUCTION A.1-1

A.2 AGING MANAGEMENT PROGRAMS AND ACTIVITIES A.1-1
A.2.1 AGING MANAGEMENT PROGRAMS A.2-2
A.2.1.1 Aboveground Steel Tanks Inspection A.2-2
A.2.1.2 Compressed Air Monitoring Program A.2-2
A.2.1.3 Appendix J Program A.2-3
A.2.1.4 Bolting Integrity Program A.2-3
A.2.1.5 Buried Piping and Tanks Inspection Program A.2-3
A.2.1.6 BWR Feedwater Nozzle Program A.2-4
A.2.1.7 BWR Penetrations Program A.2-4
A.2.1.8 BWR Stress Corrosion Cracking Program A.2-5
A.2.1.9 BWR Vessel ID Attachment Welds Program A.2-5
A.2.1.10 BWR Vessel Internals Program A.2-5
A.2.1.11 BWR Water Chemistry Program A.2-6
A.2.1.12 Chemistry Program Effectiveness Inspection A.2-6
A.2.1.13 Closed Cooling Water Chemistry Program A.2-7
A.2.1.14 Inspection of Internal Surfaces of Miscellaneous Piping and Ducting Program A.2-7
A.2.1.15 Control Rod Drive Return Line Nozzle Program A.2-8
A.2.1.16 Diesel Starting Air Inspection A.2-8
A.2.1.17 Diesel Systems Inspection Program A.2-9
A.2.1.18 Diesel-Driven Fire Pumps Inspection Program A.2-9
A.2.1.19 Electrical Cables and Connections Not Subject to 10 CFR 50.49 EQ Requirements Program A.2-9
A.2.1.20 Electrical Cables and Connections Not Subject to 10 CFR 50.49 EQ Requirements Used in Instrumentation Circuits Program A.2-9
A.2.1.21 Electrical Cable Connections Not Subject to 10 CFR 50.49 EQ Requirements Inspection A.2-10
A.2.1.22 EQ Program A.2-10
A.2.1.23 External Surfaces Monitoring Program A.2-11
A.2.1.24 Fatigue Monitoring Program A.2-11
A.2.1.25 Fire Protection Program A.2-11

Appendix A

SUPPLEMENT
AGING MANAGEMENT PROGRAMS AND ACTIVITIES CREDITED FOR COLUMBIA LICENSE RENEWAL

TABLE OF CONTENTS (continued)

Section		Page
A.2.1.26	Fire Water Program	A.2-12
A.2.1.27	Flexible Connection Inspection Program	A.2-12
A.2.1.28	Flow-Accelerated Corrosion (FAC) Program	A.2-12
A.2.1.29	Fuel Oil Chemistry Program	A.2-13
A.2.1.30	Heat Exchangers Inspection	A.2-13
A.2.1.31	High-Voltage Porcelain Insulators Aging Management Program	A.2-14
A.2.1.32	Inaccessible Power Cables Not Subject to 10 CFR 50.49 EQ Requirements Program	A.2-14
A.2.1.33	Inservice Inspection (ISI) Program	A.2-15
A.2.1.34	Inservice Inspection (ISI) Program – IWE	A.2-15
A.2.1.35	Inservice Inspection (ISI) Program – IWF	A.2-16
A.2.1.36	Lubricating Oil Analysis Program	A.2-16
A.2.1.37	Lubricating Oil Inspection	A.2-17
A.2.1.38	Masonry Wall Inspection	A.2-17
A.2.1.39	Material Handling System Inspection Program	A.2-17
A.2.1.40	Metal-Enclosed Bus Program	A.2-17
A.2.1.41	Monitoring and Collection Systems Inspection Program	A.2-18
A.2.1.42	Open-Cycle Cooling Water Program	A.2-18
A.2.1.43	Potable Water Monitoring Program	A.2-19
A.2.1.44	Preventive Maintenance – RCIC Turbine Casing	A.2-19
A.2.1.45	Reactor Head Closure Studs Program	A.2-19
A.2.1.46	Reactor Vessel Surveillance Program	A.2-19
A.2.1.47	Selective Leaching Inspection	A.2-20
A.2.1.48	Service Air System Inspection Program	A.2-20
A.2.1.49	Small Bore Class 1 Piping Program	A.2-21
A.2.1.50	Structures Monitoring Program	A.2-21
A.2.1.51	Supplemental Piping/Tank Inspection	A.2-21
A.2.1.52	Thermal Aging and Neutron Embrittlement of Cast Austenitic Stainless Steel (CASS)	A.2-22
A.2.1.53	Water Control Structures Inspection	A.2-22
A.2.1.54	Boron Carbide Monitoring Program	A.2-22
A.2.1.55	Service Level 1 Protective Coatings Program	A.2-23

Appendix A

SUPPLEMENT
AGING MANAGEMENT PROGRAMS AND ACTIVITIES CREDITED FOR COLUMBIA LICENSE RENEWAL

TABLE OF CONTENTS (continued)

Section — Page

A.2.2 EVALUATION OF TIME-LIMITED AGING ANALYSES A.2-23
A.2.2.1 Reactor Vessel Neutron Embrittlement A.2-23
A.2.2.1.1 Neutron Fluence A.2-24
A.2.2.1.2 Upper Shelf Energy Evaluation A.2-25
A.2.2.1.3 Adjusted Reference Temperature Analysis A.2-26
A.2.2.1.4 Pressure-Temperature Limits A.2-26
A.2.2.1.5 Reactor Vessel Circumferential Weld Inspection Relief A.2-27
A.2.2.1.6 Reactor Vessel Axial Weld Failure Probability A.2-28
A.2.2.2 Metal Fatigue A.2-28
A.2.2.2.1 Reactor Pressure Vessel Fatigue Analyses A.2-29
A.2.2.2.2 Reactor Pressure Vessel Internals A.2-29
A.2.2.2.3 Reactor Coolant Pressure Boundary Piping and Piping Component Fatigue Analyses A.2-31
A.2.2.3 Non-Class 1 Component Fatigue Analyses A.2-32
A.2.2.4 Effects of Reactor Coolant Environment on Fatigue Life of Components and Piping A.2-33
A.2.2.5 Environmental Qualification of Electrical Equipment A.2-34
A.2.2.6 Fatigue of Primary Containment, Attached Piping, and Components A.2-34
A.2.2.6.1 Primary Containment A.2-34
A.2.2.6.2 ASME Class MC Components A.2-35
A.2.2.6.3 Downcomers A.2-35
A.2.2.6.4 Safety Relief Valve Discharge Piping A.2-36
A.2.2.6.5 Diaphragm Floor Seal A.2-36
A.2.2.6.7 ECCS Suction Strainers A.2-37
A.2.2.7 Other Plant-Specific Time-Limited Aging Analyses A.2-37
A.2.2.7.1 Reactor Vessel Shell Indications A.2-37
A.2.2.7.2 Sacrificial Shield Wall A.2-38
A.2.2.7.3 Main Steam Flow Restrictor Erosion Analyses A.2-38
A.2.2.7.4 Core Plate Rim Hold-Down Bolts A.2-39
A.2.2.7.5 Crane Load Cycle Limit A.2-39

A.3 REFERENCES A.3-1

Appendix A

SUPPLEMENT
AGING MANAGEMENT PROGRAMS AND ACTIVITIES CREDITED FOR COLUMBIA LICENSE RENEWAL

LIST OF TABLES

Number Title Page

A.1 Columbia License Renewal Commitments A.4-1

APPENDIX A

SUPPLEMENT AGING MANAGEMENT PROGRAMS AND ACTIVITIES CREDITED FOR COLUMBIA LICENSE RENEWAL

A.0 FINAL SAFETY ANALYSIS REPORT SUPPLEMENT

A.1 INTRODUCTION

This appendix provides the information submitted for the Final Safety Analysis Report (FSAR) Supplement as required by 10 CFR 54.21(d) for the License Renewal Application (LRA). The programs and activities credited to manage the effects of aging are described in LRA Appendix B. Section 4 of the LRA documents the evaluations of time-limited aging analyses for the period of extended operation. LRA Section 3, Section 4, and Appendix B have been used to prepare the program and activity descriptions that are contained in this appendix.

A.2 AGING MANAGEMENT PROGRAMS AND ACTIVITIES

The license renewal integrated plant assessment identified existing and new aging management programs (AMPs) necessary to provide reasonable assurance that components within the scope of license renewal will continue to perform their intended functions consistent with the current licensing basis (CLB) for the period of extended operation. This section describes the aging management programs and activities identified during the integrated plant assessment. The aging management programs will be implemented prior to the period of extended operation. One-time inspections will be conducted within the 10-year period prior to beginning the period of extended operation. The aging management programs identified as necessary in association with the evaluation of time-limited aging analyses (TLAAs) are described in Section A.2.2.

Three elements of an effective aging management program that are common to each of the aging management programs are corrective actions, confirmation process, and administrative controls. These elements are included in the Operational Quality Assurance Program Description (OQAPD) for Columbia, which implements the requirements of 10 CFR 50, Appendix B.

Prior to the period of extended operation, the elements of corrective actions, confirmation process, and administrative controls in the OQAPD will be applied to required aging management programs for both safety-related and non-safety related structures and components determined to require aging management during the period of extended operation.

The existing Corrective Action Program and the Operating Experience Program ensure, through the continual review of both plant-specific and industry operating experience, that the license renewal aging management programs are effective to manage the aging effects for which they are credited. The aging management programs are either enhanced or new programs are developed when the review of operating experience indicates that the aging management programs may not be effective. For each aging management program listed in this section, operating experience is reviewed on a continuing basis.

The processes and procedures for the review of operating experience address the following points:

- All operating experience is screened for aging of long lived passive structures or components and further evaluation as applicable is performed by personnel trained in the requirements of license renewal scoping, screening, and aging management reviews (aging effects and mechanisms). The evaluation is completed and prioritized commensurate with the potential significance of the issue. Such evaluations are documented and retained in an auditable and retrievable form.

- Periodic training for system engineers, equipment operators and maintenance personnel specific to identifying aging issues.

- The License Renewal program lead is trained in the requirements of license renewal scoping, screening, and aging management reviews (aging effects and mechanisms).

- Aging management program owners are trained in the requirements of license renewal scoping, screening, and aging management reviews (aging effects and mechanisms) associated with their particular aging management program.

- When it is determined that enhancements are necessary to adequately manage the effects of aging, the enhancements are entered into and implemented consistent with the plant corrective action program or operating experience program, as applicable. Enhancements can include, as appropriate, modifications to aging management programs or the creation and implementation of new AMPs.

- Operating experience that is related to aging of long lived passive structures or components is keyword tagged “Aging.”

- The processes are adequate so as to not preclude the consideration of operating experience related to aging management. The processes appropriately gather

- information on all structures and components within the scope of license renewal, and their materials, environments, aging effects, and aging mechanisms. In addition, the processes include the AMPs credited for managing the effects of aging, and the activities under these AMPs (e.g., inspection methods, preventive actions, evaluation techniques, etc.).

- While the programs and procedures may specify reviews of certain sources of information, such as NRC generic communications and Institute of Nuclear Power Operations reports, they allow for any potential source of relevant plant specific or industry operating experience information.

- AMP owners review data collected by the AMPs, utilize the corrective action program for any conditions that are unsatisfactory to ensure they will be addressed and corrected, maintain required records for the program and maintain the program current and implement revisions as needed based on program results and internal or external operating experience.

- Provide guidance on sharing internal operating experience related to license renewal issues with the industry.

A.2.1 AGING MANAGEMENT PROGRAMS

The summary descriptions of the programs and inspections presented below are supplemented by the information and references contained in Table A-1.

A.2.1.1 ABOVEGROUND STEEL TANKS INSPECTION

The Aboveground Steel Tanks Inspection detects and characterizes the conditions on the bottom surfaces of the condensate storage tanks. The inspection provides direct evidence through volumetric examination as to whether, and to what extent, a loss of material due to corrosion has occurred in inaccessible areas (i.e., tank base and bottom surface).

The Aboveground Steel Tanks Inspection is a new inspection program that will be implemented prior to the period of extended operation and then ongoing. The initial inspection activities will be conducted within the 10-year period prior to the period of extended operation. License basis document AMPBD-ASTI provides the basis for this inspection.

A.2.1.2 COMPRESSED AIR MONITORING PROGRAM

The Compressed Air Monitoring Program replaces the Air Quality Sampling Program and the Diesel Starting Air Inspection (FSAR A.2.1.16) in accordance with NUREG-1801, Rev. 2, Section XI.M24. The Compressed Air Monitoring Program is a prevention and condition monitoring program that manages loss of material due to corrosion for Diesel Starting Air (DSA) components that contain compressed air through periodic sampling of the air for hydrocarbons, dewpoint, and particulates and periodic

ultrasonic inspection of the DSA System air receivers. In addition, the Compressed Air Monitoring Program ensures that the Control Air System remains dry and free of contaminants, such that no aging effects require management.

The Compressed Air Monitoring Program, implemented prior to entering the period of extended operation, continues during the extended period of operation by conducting opportunistic inspections when components are opened for periodic maintenance, repair, or surveillance activities when surfaces are made available for inspection. The program provides verification of the effectiveness of the program in mitigating the effects of aging in the DSA System dryers and the downstream piping and components (excluding the DSA System air receivers). License basis document AMPBD-CAM provides the basis for this inspection.

A.2.1.3 APPENDIX J PROGRAM

The Appendix J Program is an existing monitoring program that detects degradation of the Primary Containment and systems penetrating the Primary Containment, which are the containment shell and primary containment penetrations including (but not limited to) the personnel airlock, equipment hatch, control rod drive hatch, and drywell head. The Appendix J Program provides assurance that leakage from the Primary Containment will not exceed maximum values for containment leakage. License basis document LLRT-01 provides the basis for this inspection.

A.2.1.4 BOLTING INTEGRITY PROGRAM

The Bolting Integrity Program is a combination of existing activities that, in conjunction with other credited programs, address the management of aging for the bolting of mechanical components and structural connections within the scope of license renewal. The Bolting Integrity Program relies on manufacturer and vendor information and industry recommendations for the proper selection, assembly, and maintenance of bolting for pressure-retaining closures and structural connections. The Bolting Integrity Program includes, through the Inservice Inspection (ISI) Program, Inservice Inspection (ISI) Program – IWF, Structures Monitoring Program, and External Surfaces Monitoring Program, the periodic inspection of bolting for indications of degradation such as leakage, loss of material due to corrosion, loss of pre-load, and cracking due to stress corrosion cracking (SCC) and fatigue.

A.2.1.5 BURIED PIPING AND TANKS INSPECTION PROGRAM

The Buried Piping and Tanks Inspection Program manages the effects of loss of material due to corrosion on the external surfaces of metallic piping and tanks that are buried or underground. The program also manages the effects of cracking, loss of material (and loss of pre-load) for bolting that is buried. In addition, the program also verifies that aging degradation is not occurring for polymer piping that is buried. The Buried Piping and Tanks Inspection Program is a combination of a mitigation program (consisting of protective coatings and backfill quality) and a condition monitoring program (consisting of confirmation of backfill quality, periodic soil testing (every 10 years), visual inspections of pipe or tank external surfaces, and

non-destructive evaluation of pipe or tank wall thickness as needed). The Cathodic Protection System is not credited for the Buried Piping and Tanks Program per LR-ISG-2015-01.

Inspection of buried and underground piping will be performed within the 10-year period prior to entering the period of extended operation. Additional inspections of buried and underground piping and buried tanks will be performed within 10 years after entering the period of extended operation, and in each 10 year period thereafter.

The Buried Piping and Tanks Inspection Program is an existing program that requires enhancement prior to the period of extended operation. License basis document AMPBD-BPTI provides the basis for this inspection.

A.2.1.6 BWR FEEDWATER NOZZLE PROGRAM

The BWR Feedwater Nozzle Program is an existing program that manages cracking due to stress corrosion cracking and intergranular attack (SCC/IGA) and flaw growth of the feedwater nozzles. The BWR Feedwater Nozzle Program is in accordance with ASME Section XI and NRC augmented requirements.

The BWR Feedwater Nozzle Program consists of: (a) enhanced inservice inspection in accordance with the requirements of the ASME Boiler and Pressure Vessel Code, Section XI, Subsection IWB, Table IWB 2500-1 (2007 edition with the 2008 addenda) and the recommendations of General Electric report NE-523-A71-0594-A (Reference A.3-1), and (b) system modifications, as described in FSAR Section 5.3.3.1.4.5, to mitigate cracking. The program specifies periodic ultrasonic inspection of critical regions of the feedwater nozzles which are performed on at least 25% of the FW nozzles every ten-year ISI interval.

The BWR Feedwater Nozzle Program credits portions of the Inservice Inspection (ISI) Program.

A.2.1.7 BWR PENETRATIONS PROGRAM

The BWR Penetrations Program is an existing condition monitoring program that manages cracking due to SCC or intergranular stress corrosion cracking (IGSCC) of reactor vessel instrument penetrations, jet pump instrument penetrations, control rod drive penetrations, and incore instrument penetrations. The BWR Penetrations Program detects and sizes cracks in accordance with the guidelines of approved Boiling Water Reactor Vessel and Internals Project (BWRVIP) documents and the requirements of the ASME Boiler and Pressure Vessel Code, Section XI. The BWR Water Chemistry Program monitors and controls reactor coolant water chemistry in accordance with BWRVIP guidelines to ensure the long-term integrity and safe operation of the vessel components.

The program credits portions of the Inservice Inspection (ISI) Program and the BWR Vessel Internals Program.

A.2.1.8 BWR STRESS CORROSION CRACKING PROGRAM

The BWR Stress Corrosion Cracking Program is an existing condition monitoring program that manages cracking due to SCC/IGA for stainless steel and nickel alloy reactor coolant pressure boundary piping, nozzle safe ends, nozzle thermal sleeves, valve bodies, flow elements, and pump casings.

The BWR Stress Corrosion Cracking Program consists of (a) preventive measures to mitigate SCC/IGA, and (b) inspection and flaw evaluation to monitor SCC/IGA and its effects. The BWR Water Chemistry Program monitors and controls reactor coolant water chemistry in accordance with BWRVIP guidelines to ensure the long-term mitigation of SCC/IGA. The program includes the scope of the Generic Letter 88-01 program, as modified by the staff-approved BWRVIP-75 report.

The program credits portions of the Inservice Inspection (ISI) Program and the BWR Water Chemistry Program.

A.2.1.9 BWR VESSEL ID ATTACHMENT WELDS PROGRAM

The BWR Vessel ID Attachment Welds Program is an existing program that manages cracking due to SCC/IGA of the welds for internal attachments to the reactor vessel. The BWR Vessel ID Attachment Welds Program performs examinations and inspections as required by ASME Section XI, augmented by BWRVIP-48-A. These inspections include enhanced visual inspections with resolution to the guidelines in BWRVIP-03. The BWR Water Chemistry Program monitors and controls reactor coolant water chemistry in accordance with BWRVIP guidelines to ensure the long-term integrity and safe operation of the vessel internal attachment welds.

The BWR Vessel ID Attachment Welds Program credits portions of the BWR Vessel Internals Program and the Inservice Inspection (ISI) Program.

A.2.1.10 BWR VESSEL INTERNALS PROGRAM

The BWR Vessel Internals Program is an existing condition monitoring program that manages cracking due to stress corrosion cracking and irradiation assisted stress corrosion cracking (SCC/IASCC), SCC/IGA, flaw growth, and flow-induced vibration for various components and subcomponents of the reactor vessel internals. The BWR Vessel Internals Program consists of mitigation, inspection, flaw evaluation, and repair in accordance with the guidelines

of BWRVIP reports and the requirements of the ASME Boiler and Pressure Vessel Code, Section XI. The BWR Water Chemistry Program monitors and controls reactor coolant water chemistry in accordance with BWRVIP guidelines to ensure the long-term integrity and safe operation of the vessel internal components.

In addition, this program provides screening criteria to determine the susceptibility of cast austenitic stainless steels (CASS) reactor vessel internals to thermal aging and neutron fluence. For "potentially susceptible" components, the program considers loss of fracture toughness due to neutron or thermal aging embrittlement and directs augmented inspections as necessary. The additional screening and inspections will be implemented prior to the period of extended operation.

The BWR Vessel Internals Program credits portions of the Inservice Inspection (ISI) Program.

A.2.1.11 BWR WATER CHEMISTRY PROGRAM

The BWR Water Chemistry Program is an existing program that mitigates degradation of components that are within the scope of license renewal and contain or are exposed to treated water, treated water in the steam phase, reactor coolant, or treated water in a sodium pentaborate solution. The program manages the relevant conditions that could lead to the onset and propagation of a loss of material due to corrosion or erosion, cracking due to SCC, or reduction in heat transfer due to fouling through proper monitoring and control of chemical concentrations consistent with BWRVIP water chemistry guidelines.

The BWR Water Chemistry Program is supplemented by the Chemistry Program Effectiveness Inspection and the Heat Exchangers Inspection, to provide verification of the effectiveness of the program in managing the effects of aging. Additionally, the BWR Water Chemistry Program is supplemented by the BWR Feedwater Nozzle Program, BWR Stress Corrosion Cracking Program, BWR Penetrations Program, BWR Vessel ID Attachment Welds Program, BWR Vessel Internals Program, Inservice Inspection (ISI) Program, and Small Bore Class 1 Piping Program to provide verification of the program's effectiveness in managing the effects of aging for reactor pressure vessel, reactor vessel internals, and reactor coolant pressure boundary components. License basis document SWP-CHE-02 provides the basis for this inspection.

A.2.1.12 CHEMISTRY PROGRAM EFFECTIVENESS INSPECTION

The Chemistry Program Effectiveness Inspection detects and characterizes the condition of materials in representative low flow and stagnant areas of systems with water chemistry controlled by the BWR Water Chemistry Program or the Closed Cooling Water Chemistry Program, and with fuel oil chemistry controlled by the Fuel Oil Chemistry Program. The inspection provides direct evidence as to whether, and to what extent, a loss of material due to corrosion has occurred. The inspection also determines whether cracking due to SCC of susceptible materials in susceptible locations has occurred. The Chemistry Program Effectiveness Inspection is a new one-time inspection that will be implemented prior

to the period of extended operation. The inspection activities will be conducted within the 10-year period prior to the period of extended operation. License basis document AMPBD-CPEI provides the basis for this inspection.

A.2.1.13 CLOSED COOLING WATER CHEMISTRY PROGRAM

The Closed Cooling Water Chemistry Program mitigates degradation of components that are within the scope of license renewal and contain closed cooling water. The program manages the relevant conditions that could lead to the onset and propagation of a loss of material due to corrosion or erosion, cracking due to SCC, or reduction in heat transfer due to fouling through proper monitoring and control of corrosion inhibitor concentrations consistent with EPRI closed cooling water chemistry guidelines.

The Closed Cooling Water Chemistry Program includes corrosion rate measurement in reactor building closed cooling water locations and is supplemented by the one-time Chemistry Program Effectiveness Inspection and Heat Exchangers Inspection, which provide verification of the effectiveness of the program in managing the effects of aging.

The Closed Cooling Water Chemistry Program is an existing program that requires enhancement prior to the period of extended operation. License basis document AMPBD-CCW provides the basis for this inspection.

A.2.1.14 INTERNAL SURFACES OF MISCELLANEOUS PIPING AND DUCTING PROGRAM

The Inspection of Internal Surfaces of Miscellaneous Piping and Ducting (ISMPD) Program subsumes the existing Cooling Units Inspection, Diesel Systems Inspection, Diesel-Driven Fire Pump Inspection, Flexible Connection Inspection, Monitoring and Collection Systems Inspection, Potable Water Monitoring, Service Air System Inspection, and Supplemental Piping and Tanks Inspection license renewal aging management plant-specific programs, as described in FSAR A.2.1.14, A.2.1.17, A.2.1.18, A.2.1.27, A.2.1.41, A.2.1.43, A.2.1.48, and A.2.1.51, respectively, into a single inspection program in accordance with NUREG-1801, Rev. 2, Section XI.M38, as modified by LR-ISG-2012-02 (reference A.3-4). In addition, the ISMPD Program also performs the inspections of augmented and non-safety related components from the Open-Cycle Cooling Water license renewal aging management program. The components not managed by the ISMPD Program are the Generic Letter 89-13 components which are still managed by the Open-Cycle Cooling Water Program.

The ISMPD Program manages fouling, cracking, loss of material, and change in material properties using opportunistic visual inspections of the internal surfaces of piping and other components during periodic surveillances or maintenance activities when the surfaces are accessible for visual inspection during the period of extended operation. This opportunistic approach is supplemented as needed to ensure a representative sample is achieved in each 10-year interval of the period of extended operation. At a minimum, in each 10-year interval during the period of extended operation a representative sample of 20% of the

population (defined as components having the same combination of material, environment, and aging effect) or a maximum of 25 components per population is inspected. Where practical, the inspections focus on the bounding or lead components most susceptible to aging because of time in service, and severity of operating conditions. Opportunistic inspections continue in each period despite meeting the sample limit.

The ISMPD Program is consistent with NRC guidance contained in NUREG-1801 AMP XI.M38 "Inspection of Internal Surfaces of Miscellaneous Piping and Ducting Components" as modified by LR-ISG-2012-02 (reference A.3-4). Due to XI.M38 limitations of inspections for loss of material, an exception is taken to include inspections for cracking within the ISMPD Program using inspection techniques capable of detecting this aging effect. License basis document AMPBD-ISMPD provides the basis for this inspection.

A.2.1.15 CONTROL ROD DRIVE RETURN LINE NOZZLE PROGRAM

The Control Rod Drive Return Line (CRDRL) Nozzle Program is an existing mitigation and condition monitoring program that manages cracking due to flaw growth of the control rod drive return line nozzle, safe end, cap, and connecting welds. The CRDRL Nozzle Program consists of a) mitigation activities, and b) inspection, flaw evaluation, and repair in accordance with the ASME Boiler and Pressure Vessel Code, Section XI, Subsection IWB, Table IWB 2500-1 (2007 edition with the 2008 addenda) and the recommendations of NUREG-0619. System modifications were implemented by the original equipment manufacturer prior to initial startup to mitigate cracking. The BWR Water Chemistry Program monitors and controls reactor coolant water chemistry in accordance with BWRVIP guidelines to ensure the long-term integrity and safe operation of the critical regions of the CRDRL nozzle.

The CRDRL Nozzle Program credits portions of the Inservice Inspection (ISI) Program.

A.2.1.16 DIESEL STARTING AIR INSPECTION

The Diesel Starting Air Inspection is described in NUREG-2123, Section 3.0.3.1.11 (reference A.3-5). The program has been replaced by the Compressed Air Monitoring Program. License basis document AMPBD-CAM provides the basis for this inspection.

A.2.1.17 DIESEL SYSTEMS INSPECTION PROGRAM

The Diesel Systems Inspection Program is described in NUREG-2123, Section 3.0.3.1.12 (reference A.3-5). This program has been subsumed into the ISMPD Program. License basis document AMPBD-ISMPD provides the basis for this inspection.

A.2.1.18 DIESEL-DRIVEN FIRE PUMPS INSPECTION PROGRAM

The Diesel-Driven Fire Pumps Inspection Program is described in NUREG-2123, Section 3.0.3.1.13 (reference A.3-5). This program has been subsumed into the ISMPD Program. License basis document AMPBD-ISMPD provides the basis for this inspection.

A.2.1.19 ELECTRICAL CABLES AND CONNECTIONS NOT SUBJECT TO 10 CFR 50.49 EQ REQUIREMENTS PROGRAM

The Electrical Cables and Connections Not Subject to 10 CFR 50.49 EQ Requirements Program is an inspection program that detects degradation of electrical cables and connections that are not environmentally qualified and are within the scope of license renewal. The program provides for periodic visual inspection of accessible, non- environmentally qualified cables and connections in order to determine if age-related degradation is occurring, particularly in plant areas with adverse localized environments. An adverse localized environment is a condition in a limited plant area that is significantly more severe than the specified design or bounding plant environment for the general area.

The Electrical Cables and Connections Not Subject to 10 CFR 50.49 EQ Requirements Program is a new aging management program that will be implemented prior to the period of extended operation. The inspection frequency of the program will be once every 10 years, with the initial inspection to be performed prior to the period of extended operation. License basis document AMPBD-E1 provides the basis for this inspection.

A.2.1.20 ELECTRICAL CABLES AND CONNECTIONS NOT SUBJECT TO 10 CFR 50.49 EQ REQUIREMENTS USED IN INSTRUMENTATION CIRCUITS PROGRAM

The Electrical Cables and Connections Not Subject to 10 CFR 50.49 EQ Requirements Used in Instrumentation Circuits Program is a monitoring program that detects degradation of electrical cables and connections that are not environmentally qualified and used in circuits with sensitive, low-current applications (such as radiation monitoring and nuclear instrumentation loops). The program provides for a review of calibration records for the low-current instruments, in order to detect and identify degradation of the cable system insulation resistance. The program retains the option to perform direct cable testing.

The Electrical Cables and Connections Not Subject to 10 CFR 50.49 EQ Requirements Used in Instrumentation Circuits Program is a new aging management program that will be implemented prior to the period of extended operation. The frequency of the program will be once every 10 years, with the initial review to be performed prior to the period of extended operation. License basis document AMPBD-E2 provides the basis for this inspection.

A.2.1.21 ELECTRICAL CABLE CONNECTIONS NOT SUBJECT TO 10 CFR 50.49 EQ REQUIREMENTS INSPECTION

The Electrical Cable Connections Not Subject to 10 CFR 50.49 EQ Requirements Inspection detects and characterizes the material condition of metallic electrical connections within the scope of license renewal. The inspection uses thermography (augmented by contact resistance testing) to detect loose or degraded connections that lead to increased resistance for a representative sample of metallic electrical connections in various plant locations.

The Electrical Cable Connections Not Subject to 10 CFR 50.49 EQ Requirements Inspection is a new one-time inspection that will be implemented prior to the period of extended operation. The inspection activities will be conducted within the 10-year period prior to the period of extended operation. License basis document AMPBD-E6 provides the basis for this inspection.

A.2.1.22 EQ PROGRAM

Environmental qualification (EQ) analyses for electrical components with a qualified life of 40 years or greater are identified as TLAAs; therefore, the effects of aging must be addressed for license renewal.

NRC regulation 10 CFR 50.49, "Environmental Qualification of Electrical Equipment Important to Safety for Nuclear Power Plants," requires licensees to identify electrical equipment covered under this regulation and to maintain a qualification file demonstrating that the equipment is qualified for its application and will perform its safety function up to the end of its qualified life. The EQ Program is an existing program that implements the requirements of 10 CFR 50.49 (as further defined by the Division of Operating Reactor Guidelines, NUREG-0588, and Regulatory Guide 1.89 Revision 1).

In accordance with 10 CFR 54.21(c)(1)(iii), the EQ Program will be used to manage the effects of aging on the intended functions of the components associated with EQ TLAAs for the period of extended operation, because equipment will be replaced prior to reaching the end of its qualified life. Reanalysis addresses attributes of analytical methods, data collection and reduction methods, underlying assumptions, acceptance criteria, and corrective actions if acceptance criteria are not met. Reanalysis of aging evaluations to extend the qualification of

components is performed on a routine basis pursuant to 10 CFR 50.49(e) as part of the Columbia EQ Program. License basis documents EQES-2, EQES-4 and EQP-1.1 provide the basis for this inspection.

A.2.1.23 EXTERNAL SURFACES MONITORING PROGRAM

The External Surfaces Monitoring Program consists of observation and surveillance activities intended to detect degradation resulting from loss of material due to corrosion and cracking due to SCC for mechanical components, as well as hardening and loss of strength for elastomers. The External Surfaces Monitoring Program is a condition-monitoring program.

The External Surfaces Monitoring Program is an existing program that requires enhancement prior to the period of extended operation. License basis document EMPBD-ESMP provides the basis for this inspection.

A.2.1.24 FATIGUE MONITORING PROGRAM

Fatigue evaluations for mechanical components are identified as TLAAs; therefore, the effects of fatigue have been addressed for license renewal.

Energy Northwest monitors fatigue of various components (including ASME Class 1 reactor coolant pressure boundary, high energy line break locations, and Primary Containment) via the Fatigue Monitoring Program, which tracks transient cycles and calculates fatigue usage. Energy Northwest has assessed the impact of the reactor coolant environment on the sample of critical components identified in NUREG/CR-6260 and other limiting components beyond those locations identified in NUREG/CR-6260. Calculation of fatigue usage values is not required for non-Class 1 SSCs. Instead, stress intensification factors and lower stress allowables are used to ensure components are adequately designed for fatigue.

In accordance with 10 CFR 54.21(c)(1)(iii), the Fatigue Monitoring Program will be used to manage the effects of aging due to fatigue on the intended functions of the components associated with fatigue TLAAs for the period of extended operation.

The Fatigue Monitoring Program is an existing program that requires enhancement prior to the period of extended operation. License basis document AMPBD-FMP provides the basis for this inspection.

A.2.1.25 FIRE PROTECTION PROGRAM

The Fire Protection Program is an existing program, described in Appendix F of the FSAR, that detects degradation of components in the scope of license renewal that have fire barrier functions. Periodic visual inspections and functional tests are performed of fire dampers, fire barrier walls, ceilings and floors, fire-rated penetration seals, fire wraps, fire proofing, and fire doors to ensure that functionality and operability are maintained. In addition, the Fire

Protection Program supplements the Fuel Oil Chemistry Program and External Surfaces Monitoring Program through performance monitoring of the diesel-driven fire pump fuel oil supply components and testing and inspection of the halon and carbon dioxide suppression systems, respectively. The Fire Protection Program is a condition monitoring program, comprised of tests and inspections based on Section F.2.7. License basis documents PSM-5.10 and SWP-FPP-01 provide the basis for this inspection.

A.2.1.26 FIRE WATER PROGRAM

The Fire Water Program (sub-program of the overall Fire Protection Program) is described in Appendix F of the FSAR, and is credited with managing loss of material due to corrosion, erosion, macrofouling, and selective leaching, cracking due to SCC/IGA of susceptible water-based fire suppression components in the scope of license renewal. Periodic inspection and testing of the water-based fire suppression systems provides reasonable assurance that the systems will remain capable of performing their intended function. Periodic inspection and testing activities include hydrant and hose station inspections, fire main flushing, flow tests, and sprinkler inspections. The Fire Water Program is a condition monitoring program, comprised of tests and inspections based on Section F.2.7.

The Fire Water Program is an existing program that requires enhancement prior to the period of extended operation. License basis document AMPBD-FW provides the basis for this inspection.

A.2.1.27 FLEXIBLE CONNECTION INSPECTION PROGRAM

The Flexible Connection Inspection Program is described in NUREG-2123, Section 3.0.3.2.10 (reference A.3-5). This program has been subsumed into the ISMPD Program. License basis document AMPBD-ISMPD provides the basis for this inspection.

A.2.1.28 FLOW-ACCELERATED CORROSION (FAC) PROGRAM

The Flow-Accelerated Corrosion (FAC) Program manages loss of material for steel and gray cast iron components located in the treated water environment of systems that are susceptible to

FAC, also called erosion-corrosion. The FAC Program combines the elements of predictive analysis; inspections (to baseline and monitor wall-thinning), industry experience, station information gathering and communication, and engineering judgment to monitor and predict FAC wear rates. The program is a condition monitoring program that implements the recommendations of NRC Generic Letter 89-08, and follows the guidance and recommendations of EPRI NSAC-202L (Reference A.3-2), to ensure that the integrity of piping systems susceptible to FAC is maintained.

The FAC Program is an existing program that requires enhancement prior to the period of extended operation. License basis document AMPBD-FAC provides the basis for this inspection.

A.2.1.29 FUEL OIL CHEMISTRY PROGRAM

The Fuel Oil Chemistry Program is an existing program that maintains fuel oil quality in order to mitigate degradation of the storage tanks and associated components containing fuel oil that are within the scope of license renewal. The program includes diesel fuel oil testing for emergency diesel generator and diesel-driven fire pump fuel. The Fuel Oil Chemistry Program manages the relevant conditions that could lead to the onset and propagation of loss of material due to corrosion, or cracking due to SCC of susceptible copper alloys, through proper monitoring and control of fuel oil contamination consistent with plant technical specifications and American Society for Testing and Materials (ASTM) standards for fuel oil. The relevant conditions are specific contaminants such as water or microbiological organisms in the fuel oil that could lead to corrosion of susceptible materials. Exposure to these contaminants is minimized by verifying the quality of new fuel oil before it enters the emergency diesel generator storage tanks and by periodic sampling to ensure that both the emergency diesel generator tanks and fire protection tanks are free of water and particulates. The Fuel Oil Chemistry Program is a mitigation program.

The Fuel Oil Chemistry Program is supplemented by the Chemistry Program Effectiveness Inspection, which provides verification of the effectiveness of the program in mitigating the effects of aging. License basis document SWP-CHE-04 provides the basis for this inspection.

A.2.1.30 HEAT EXCHANGERS INSPECTION

The Heat Exchangers Inspection detects and characterizes the surface conditions with respect to fouling of heat exchangers and coolers that are in the scope of the inspection and exposed to indoor air or to water with the chemistry controlled by the BWR Water Chemistry Program or the Closed Cooling Water Chemistry Program. The inspection provides direct evidence as to whether, and to what extent, a reduction of heat transfer due to fouling has occurred on the heat transfer surfaces of heat exchangers and coolers.

The Heat Exchangers Inspection is a new one-time inspection that will be implemented prior to the period of extended operation. The inspection activities will be conducted within the 10-year period prior to the period of extended operation. License basis document AMPBD-HXI provides the basis for this inspection.

A.2.1.31 HIGH-VOLTAGE PORCELAIN INSULATORS AGING MANAGEMENT PROGRAM

The High-Voltage Porcelain Insulators Aging Management Program is an existing program that manages the build-up of contamination (hard water residue) on the surfaces of the 115-kV high-voltage insulators located in the transformer yard and the 230-kV high voltage insulators located in the Ashe substation. The program provides for periodic cleaning or recoating of insulators and visual inspection of the coating (if present) on the high-voltage station post insulators between the 115-kV backup transformer and circuit breaker E-CB-TRB located in the station transformer yard. Testing for contamination, and cleaning if required, is conducted on the high voltage station post insulators between the 230-kV overhead line running to Columbia and circuit breaker E-CB-TRS, located in the Ashe substation.

The High-Voltage Porcelain Insulators Aging Management Program is a preventive maintenance program consisting of activities to mitigate potential degradation of the insulation function due to hard water deposits. Uncoated insulators located in the transformer yard are inspected and cleaned every two years. Coated insulators are visually inspected for damage every two years and are re-coated every 10 years. The program requires enhancement prior to the period of extended operation to have the insulators located in the Ashe substation tested for contamination, and cleaned if required, every 8 years. License basis document AMPBD-HVPI provides the basis for this inspection.

A.2.1.32 INACCESSIBLE POWER CABLES NOT SUBJECT TO 10 CFR 50.49 EQ REQUIREMENTS PROGRAM

The Inaccessible Power Cables Not Subject to 10 CFR 50.49 EQ Requirements Program will manage the aging of in-scope, power cables (≥ 400V) exposed to significant moisture. First tests or first inspection for license renewal will be completed before the period of extended operation. These cables will be tested at least once every 6 years to provide an indication of the condition of the conductor insulation. The specific type of test performed will be determined prior to the initial test, and is to be a proven test for detecting deterioration of the insulation system due to wetting, such as power factor, partial discharge, or polarization index, as described in EPRI TR-103834-P1-2 (Reference A.3-3), or other testing that is state-of-the-art at the time the test is performed. Significant moisture is defined as periodic exposures that last more than a few days (e.g., cable in standing water). Periodic exposures that last less than a few days (e.g., normal rain and drain) are not significant. In addition, inspection for water collection in electrical manholes will be performed based on actual plant experience with water accumulation in the manholes. However, the inspection frequency will

be at least annually. Manhole inspection will also be performed periodically, in response to event-driven occurrences (such as heavy rain or flooding). The inspection will include direct observation that cables are not wetted or submerged, that cables/splices and cable support structures are intact, and sump pump systems and associated alarms operate properly. In addition, sump pumps will be inspected and operation verified prior to any known or predicted heavy rain or flooding events which could require the sump pump to operate.

E-MH-B105 sump pump alarms are not installed for this sump pump and will not be inspected or operation verified prior to any known or predicted heavy rain or flooding events. E-MH-B105 electrical manhole will only include direct observation that cables are not wetted or submerged, and that cables/splices and cable support structures are intact as directed by station procedures. License basis document AMPBD-E3 provides the basis for this inspection.

A.2.1.33 INSERVICE INSPECTION (ISI) PROGRAM

The Inservice Inspection (ISI) Program is an existing condition monitoring program that manages cracking due to SCC/IGA and flaw growth of multiple reactor coolant system pressure boundary components, including the reactor vessel, a limited number of internals components, and the reactor coolant system pressure boundary. The Inservice Inspection (ISI) Program also manages loss of material due to corrosion for reactor vessel internals components and reduction of fracture toughness due to thermal embrittlement of cast austenitic stainless steel pump casings and valve bodies.

The Inservice Inspection (ISI) Program details the requirements for the examination, testing, repair, and replacement of components specified in ASME Section XI for Class 1, 2, or 3 components. The Inservice Inspection (ISI) Program complies with the ASME Code requirements.

The program scope has been augmented to include additional requirements, and components, beyond the ASME requirements. Examples include the augmentation of ISI to expand reactor vessel feedwater nozzle examinations, examinations of high energy line piping systems that penetrate containment, examinations per Generic Letter 88-01, and examinations of shroud support plate access hole covers per BWRVIP guidance. Such augmentation is consistent with the ISI program description in NUREG-1801, Section XI.M1.

A.2.1.34 INSERVICE INSPECTION (ISI) PROGRAM – IWE

The Inservice Inspection (ISI) Program – IWE is an existing program that establishes responsibilities and requirements for conducting IWE inspections as required by 10 CFR 50.55a. The Inservice Inspection (ISI) Program – IWE includes visual examination of all accessible surface areas of the steel containment and its integral attachments, and containment pressure-retaining bolting in accordance with the requirements of the ASME Boiler and Pressure Vessel Code, Section XI, Subsection IWE.

The inservice examinations conducted throughout the service life of Columbia will comply with the requirements of the ASME Section XI Edition and Addenda incorporated by reference in 10 CFR 50.55a(b) twelve months prior to the start of the inspection interval, subject to prior approval of the edition and addenda by the NRC. This is consistent with NRC statements of consideration for 10 CFR 54 associated with the adoption of new editions and addenda of the ASME Code in 10 CFR 50.55a.

A.2.1.35 INSERVICE INSPECTION (ISI) PROGRAM – IWF

The Inservice Inspection (ISI) Program – IWF is an existing program that establishes responsibilities and requirements for conducting IWF Inspections for ASME Class 1, 2, and 3 component supports as required by 10 CFR 50.55a. The Inservice Inspection (ISI) Program – IWF performs visual examination of supports based on sampling of the total support population. The sample size varies depending on the ASME Class. The largest sample size is specified for the most critical supports (ASME Class 1 and those other than piping supports (Class 1, 2, 3, and MC)). The sample size decreases for the less critical supports (ASME Class 2 and 3). The primary inspection method employed is visual examination. Degradation that potentially compromises support function or load capacity is identified for evaluation. Supports requiring corrective actions are re-examined during the next inspection period in accordance with the requirements of the ASME Boiler and Pressure Vessel Code, Section XI, Subsection IWF.

The inservice examinations conducted throughout the service life of Columbia will comply with the requirements of the ASME Section XI Edition and Addenda incorporated by reference in 10 CFR 50.55a(b) twelve months prior to the start of the inspection interval, subject to prior approval of the edition and addenda by the NRC. This is consistent with NRC statements of consideration for 10 CFR 54 associated with the adoption of new editions and addenda of the ASME Code in 10 CFR 50.55a.

A.2.1.36 LUBRICATING OIL ANALYSIS PROGRAM

The Lubricating Oil Analysis Program manages loss of material due to corrosion or selective leaching of susceptible materials and reduction of heat transfer due to fouling for plant components that are within the scope of license renewal and exposed to a lubricating oil environment. The Lubricating Oil Analysis Program is a mitigation program.

The Lubricating Oil Analysis Program is supplemented by the Lubricating Oil Inspection, which provides verification of the effectiveness of the program in mitigating the effects of aging.

The Lubricating Oil Analysis Program is an existing program that requires enhancement prior to the period of extended operation. License basis document AMPBD-LOA provides the basis for this inspection.

A.2.1.37 LUBRICATING OIL INSPECTION

The Lubricating Oil Inspection detects and characterizes the condition of materials in systems and components for which the Lubricating Oil Analysis Program is credited with aging management. The inspection provides direct evidence as to whether, and to what extent, a loss of material due to corrosion or selective leaching has occurred. The inspection also determines whether a reduction in heat transfer due to fouling has occurred.

The Lubricating Oil Inspection is a new one-time inspection that will be implemented prior to the period of extended operation. The inspection activities will be conducted within the 10-year period prior to the period of extended operation. License basis document AMPBD-LOI provides the basis for this inspection.

A.2.1.38 MASONRY WALL INSPECTION

The Masonry Wall Inspection consists of inspection activities to detect cracking of masonry walls within the scope of license renewal. Masonry walls that perform a fire barrier intended function are also managed by the Fire Protection Program. The Masonry Wall Inspection is implemented as part of the Structures Monitoring Program. The Masonry Wall Inspection performs visual inspection of external surfaces of masonry walls.

The Masonry Wall Inspection is an existing program that requires enhancement prior to the period of extended operation. License basis document AMPBD-MWI provides the basis for this inspection.

A.2.1.39 MATERIAL HANDLING SYSTEM INSPECTION PROGRAM

The Material Handling System Inspection Program manages loss of material for cranes (including bridge, trolley, rails, and girders), monorails, and hoists within the scope of license renewal. The Material Handling System Inspection Program is based on guidance contained in ANSI B30.2 for overhead and gantry cranes, ANSI B30.11 for monorail systems and underhung cranes, and ANSI B30.16 for overhead hoists. License basis documents PPMs 10.4.1, 10.4.5, 10.4.10, and 10.4.12 provide the basis for this inspection

A.2.1.40 METAL-ENCLOSED BUS PROGRAM

The Metal-Enclosed Bus program is a new program that detects degradation of the metal enclosed bus in scope of license renewal. The program includes periodic inspection of the interior sections of the bus, and the elastomer seals at the joints of the duct sections. The program also conducts periodic connection resistance tests to ensure all welded flex connections are not experiencing any aging effects.

These program aging management activities will be performed once every 10 years, with the first conducted prior to the period of extended operation. License basis document AMPBD-MEB provides the basis for this inspection.

A.2.1.41 MONITORING AND COLLECTION SYSTEMS INSPECTION PROGRAM

The Monitoring and collection Systems Inspection Program is described in NUREG-2123, Section 3.0.3.3.8 (reference A.3-5). This program has been subsumed into the ISMPD Program. License basis document AMPBD-ISMPD provides the basis for this inspection.

A.2.1.42 OPEN-CYCLE COOLING WATER PROGRAM

The Open-Cycle Cooling Water Program manages loss of material due to corrosion and erosion for components located in the Standby Service Water system, and for components connected to or serviced by those systems. The program manages fouling due to particulates (e.g., corrosion products) and biological material (micro- or macro-organisms) resulting in reduction in heat transfer for heat exchangers (including condensers, coolers, cooling coils, and evaporators) within the scope of the program.

The Open-Cycle Cooling Water Program consists of inspections, surveillances, and testing to detect the presence, and assess the extent of fouling and loss of material. The inspection activities are combined with chemical treatments and cleaning activities to minimize the effects of aging. The program is a combination condition monitoring and mitigation program that implements the recommendations of NRC Generic Letter 89-13 for safety-related equipment in the scope of the program.

The Inspection of Internal Surfaces in Miscellaneous Piping and Ducting Components Program (A.2.1.14) manages non-safety related components contained either service water or spray pond makeup water.

The Open-Cycle Cooling Water Program is an existing program that requires enhancement prior to the period of extended operation. License basis document AMPBD-OCCW provides the basis for this inspection.

A.2.1.43 POTABLE WATER MONITORING PROGRAM

The Potable Water Monitoring Program is described in NUREG-2123, Section 3.0.3.3.9 (reference A.3-5). This program has been subsumed into the ISMPD Program. License basis document AMPBD-ISMPD provides the basis for this inspection.

A.2.1.44 PREVENTIVE MAINTENANCE – RCIC TURBINE CASING

Preventive Maintenance – RCIC Turbine Casing is an existing program that manages loss of material due to corrosion for the reactor core isolation cooling (RCIC) pump turbine casing and associated piping components downstream from the steam admission valve. These components are exposed to steam during RCIC system operation and testing, but are empty during normal plant operating conditions. Preventive Maintenance – RCIC Turbine Casing is a condition monitoring program comprised of periodic inspection and surveillance activities to detect aging and age-related degradation. License basis document PPM 10.7.1 provides the basis for this inspection.

A.2.1.45 REACTOR HEAD CLOSURE STUDS PROGRAM

The Reactor Head Closure Studs Program is an existing program that manages cracking due to SCC and loss of material due to corrosion for the reactor head closure stud assemblies (studs, nuts, washers, and bushings). The Reactor Head Closure Studs Program examines reactor vessel stud assemblies in accordance with the examination and inspection requirements specified in the ASME Boiler and Pressure Vessel Code, Section XI, Subsection IWB (edition and addenda described in the Inservice Inspection (ISI) Program), Table IWB 2500-1. The Reactor Head Closure Studs Program includes preventive measures in accordance with Regulatory Guide 1.65 to mitigate cracking.

The Reactor Head Closure Studs Program credits portions of the Inservice (ISI) Inspection Program.

A.2.1.46 REACTOR VESSEL SURVEILLANCE PROGRAM

The Reactor Vessel Surveillance Program is an existing condition monitoring program that manages reduction of fracture toughness due to radiation embrittlement for the low alloy steel

reactor vessel shell and welds in the beltline region. The Reactor Vessel Surveillance Program incorporates the BWRVIP Integrated Surveillance Program (ISP), as described in the latest approved revision of BWRVIP-86 (Reference 5.3.4-2).

Energy Northwest follows the requirements of the BWRVIP ISP and applies the ISP data to Columbia. The NRC has approved the use of the BWRVIP ISP in place of a unique plant program for Columbia.

The provisions of 10 CFR 50 Appendix G require Columbia to operate within the currently licensed pressure-temperature (P-T) limit curves, and to update these curves as necessary. The P-T limit curves, as contained in plant technical specifications, will be updated as necessary through the period of extended operation as part of the Reactor Vessel Surveillance Program. Reactor vessel P-T limits will thus be managed for the period of extended operation. License basis document SWP-VIP-02 provides the basis for this inspection.

A.2.1.47 SELECTIVE LEACHING INSPECTION

The Selective Leaching Inspection detects and characterizes the conditions on internal and external surfaces of subject components exposed to raw water, treated water, fuel oil, soil, and moist air (including condensation) environments. The inspection provides direct evidence through a combination of visual examination and hardness testing, or NRC-approved alternative, as to whether, and to what extent, a loss of material due to selective leaching has occurred.

The Selective Leaching Inspection is a new one-time inspection that will be implemented prior to the period of extended operation. The inspection activities will be conducted no earlier than 5 years prior to the period of extended operation. License basis document AMPBD-SLI provides the basis for this inspection.

A.2.1.48 SERVICE AIR SYSTEM INSPECTION PROGRAM

The Service Air System Inspection Program is described in NUREG-2123, Section 3.0.3.1.29 (reference A.3-5). This program has been subsumed into the ISMPD Program. License basis document AMPBD-ISMPD provides the basis for this inspection.

A.2.1.49 SMALL BORE CLASS 1 PIPING PROGRAM

The Small Bore Class 1 Piping Program will detect and characterize cracking of small bore Class 1 piping components that are exposed to reactor coolant. This one-time inspection will provide physical evidence as to whether, and to what extent, cracking due to SCC or to thermal or mechanical loading has occurred in Small Bore Class 1 piping components. The Small Bore Class 1 Piping Program will be a condition monitoring program with no actions to prevent or mitigate aging effect. The program will include visual and volumetric inspection of a representative sample of small bore Class 1 piping, including butt welds and socket welds.

The Small Bore Class 1 Piping Program is a new program that will be implemented prior to the period of extended operation. Inspection activities will begin during the fourth 10-year inservice inspection interval and be completed prior to the period of extended operation. The Small Bore Class 1 Piping Inspection will credit portions of the Inservice Inspection (ISI) Program. The Small Bore Class 1 Piping Inspection will verify the effectiveness of the BWR Water Chemistry Program in mitigating cracking of small bore piping and piping components.

A.2.1.50 STRUCTURES MONITORING PROGRAM

The Structures Monitoring Program manages age-related degradation of plant structures and structural components within its scope to ensure that each structure or structural component retains the ability to perform its intended function. Aging effects are detected by visual inspection of external surfaces prior to the loss of the structure's or component's intended function. The Structures Monitoring Program encompasses and implements the Water Control Structures Inspection and the Masonry Wall Inspection. This program implements provisions of the Maintenance Rule, 10 CFR 50.65, that relate to structures, masonry walls, and water control structures. Concrete and masonry walls that perform a fire barrier intended function are also managed by the Fire Protection Program.

The Structures Monitoring Program is an existing program that requires enhancement prior to the period of extended operation. License basis document AMPBD-SMP provides the basis for this inspection.

A.2.1.51 SUPPLEMENTAL PIPING/TANK INSPECTION

The Supplemental Piping/Tank Inspection Program is described in NUREG-2123, Section 3.0.3.1.29 (reference A.3-5). This program has been subsumed into the ISMPD Program. License basis document AMPBD-ISMPD provides the basis for this inspection.

A.2.1.52 THERMAL AGING AND NEUTRON EMBRITTLEMENT OF CAST AUSTENITIC STAINLESS STEEL (CASS)

The Thermal Aging and Neutron Embrittlement of Cast Austenitic Stainless Steel (CASS) is managed under the BWR Vessel Internals Program, see FSAR A.2.1.10.

A.2.1.53 WATER CONTROL STRUCTURES INSPECTION

The Water Control Structures Inspection, implemented as part of the Structures Monitoring Program, consists of inspection activities to detect aging and age-related degradation. The Water Control Structures Inspection ensures the structural integrity and operational adequacy of the spray ponds, standby service water pump houses, circulating water pump house (including circulating water basin), makeup water pump house, cooling tower basins, and those structural components within the structures.

The Water Control Structures Inspection is an existing program that requires enhancement prior to the period of extended operation. License basis document AMPBD-WCSI provides the basis for this inspection.

A.2.1.54 BORON CARBIDE MONITORING PROGRAM

The Boron Carbide Monitoring Program detects degradation of the Boron Carbide (B_4C) neutron absorbers in the spent fuel storage racks by monitoring spent fuel racks for potential off-gassing, by in situ testing of the spent fuel racks, and by inspecting the B_4C coupons.

From the monitoring data, the stability and integrity of Boron Carbide in the storage cells are assessed. Periodic monitoring of B_4C coupons permits early determination of aging degradation. License basis document AMPBD-B4C provides the basis for this inspection.

A.2.1.55 SERVICE LEVEL 1 PROTECTIVE COATINGS PROGRAM

The Service Level 1 Protective Coating Program monitors the performance of Service Level 1 coatings inside containment through periodic coating examinations, condition assessments, and remedial actions, including repair or testing. The program establishes roles, responsibilities, controls and deliverables for the Service Level 1 Protective Coatings Program. This program also ensures the Design Basis Accident (DBA) analysis limits with regard to coating will not be exceeded for the suction strainers. Site Wide Procedure SWP-SPS-03 provides the basis for this inspection.

A.2.2 EVALUATION OF TIME-LIMITED AGING ANALYSES

In accordance with 10 CFR 54.21(c), an application for a renewed operating license requires an evaluation of TLAAs for the period of extended operation. The following TLAAs have been identified and evaluated to meet this requirement.

A.2.2.1 REACTOR VESSEL NEUTRON EMBRITTLEMENT

Neutron embrittlement is the change in mechanical properties of reactor vessel materials resulting from exposure to fast neutron flux ($E > 1.0$ MeV) in the beltline region of the reactor core. The most pronounced material change is a reduction in fracture toughness. As fracture toughness decreases with cumulative fast neutron exposure, the material's resistance to crack propagation decreases. Fracture toughness is also dependent on temperature. The reference temperature for nil-ductility transition (RT_{NDT}) is the temperature above which the material behaves in a ductile manner and below which the material behaves in a brittle manner. As fluence increases, RT_{NDT} increases, and higher temperatures are required for the material to continue to act in a ductile manner.

Requirements associated with fracture toughness, pressure-temperature limits, and material surveillance programs for the reactor coolant pressure boundary are contained in Appendices G and H of 10 CFR 50.

The analyses associated with evaluation of the effect of neutron embrittlement on the reactor pressure vessel for 40 years are TLAAs. Neutron fluence, upper shelf energy, adjusted reference temperature (ART), and vessel P-T limits are time dependent parameters associated with fracture toughness (embrittlement) of reactor vessel materials.

A.2.2.1.1 Neutron Fluence

EFPY Projection

To evaluate the effects of radiation on reactor pressure vessel material embrittlement, the results of analyses were projected to determine neutron fluence out to 54 effective full power years (EFPY). Using actual reactor core power histories through 2007 and conservative estimates of future core designs, extended operation to 60 years was determined to be bounded by 54 EFPY.

Fluence Projection

Analyzed fluence values at 51.6 EFPY of reactor operation are addressed in FSAR Section 4.3.2.8 and FSAR Table 4.3-1. These fluence analyses are based on the original licensed thermal power of 3323 mega-watt thermal (MWt) through fuel cycle 10, the previous licensed thermal power uprated to 3486 MWt from cycle 11 through cycle 23, and the current licensed thermal power uprated to 3544 MWt from cycle 24 through the end of life. These fluence analyses use NRC-approved methodology based on the guidance of Regulatory Guide 1.190, "Calculational and Dosimetry Methods for Determining Pressure Vessel Neutron Fluence." The fluence analyses were projected to 54 EFPY for the extended operating period of 60 years.

Beltline Evaluation

For the extended operating period, all ferritic materials for vessel beltline shells, welds, nozzles and the associated nozzle to vessel welds, and assembly components are required to be evaluated for neutron irradiation embrittlement if high energy neutron fluence is greater than a threshold value of 1E+17 n/cm^2 (E >1 MeV) at the end of the 60 years. The only vessel assembly items, other than the shells and welds of the beltline region that would experience neutron fluence greater than 1E+17 n/cm^2 during the period of extended operation are instrumentation nozzle N12 and residual heat removal/low pressure coolant injection (RHR/LPCI) nozzle N6 (and the associated nozzle-to-vessel welds).

Instrumentation nozzle N12 has a thickness less than 2.5 inches and was not originally evaluated for fracture toughness per ASME Code Appendix G, Section G2223. Nozzle N12 is not limiting for P-T curves as discussed in Section A.2.2.1.4; however, as nozzle N12 was evaluated for impact on the P-T curves it meets the definition of a beltline component per 10 CFR 50, Appendix G. The associated nozzle-to-vessel weld is an austenitic weld and, therefore, is not subject to the fracture toughness requirements of 10 CFR 50, Appendix G.

Nozzle N6 is included in the evaluation for USE in Section A.2.2.1.2. Nozzle N6 is evaluated for ART in Section A.2.2.1.3 below. Nozzle N6 is not the limiting material for the vessel. However, as nozzle N6 was evaluated for ART it meets the definition of a beltline component

per 10 CFR 50, Appendix G. The associated nozzle-to-vessel weld is a ferritic weld and, therefore, is subject to the fracture toughness requirements of 10 CFR 50, Appendix G. The nozzle-to-vessel weld for nozzle N6 is also included in the evaluation for USE in Section A.2.2.1.2 and is evaluated for ART in Section A.2.2.1.3.

The beltline definition for the period of extended operation includes the lower shell (Course #1 / Ring #21), lower-intermediate shell (Course #2 / Ring #22), associated vertical (longitudinal) welds, the girth (circumferential) weld that connects the lower and lower-intermediate shells, and nozzles N6 (and its associated nozzle-to-vessel weld) and nozzle N12.

Disposition

Neutron fluence has been projected to the end of the period of extended operation.

A.2.2.1.2 Upper Shelf Energy Evaluation

Appendix G of 10 CFR 50 requires the upper shelf energy (USE) of the vessel beltline materials to remain above 50 ft-lb at all times during plant operation, including the effects of neutron radiation. If USE cannot be shown to remain above this limit, then an equivalent margin analysis (EMA) must be performed to show that the margins of safety against fracture are equivalent to those required by Appendix G of Section XI of the ASME Code.

The initial (unirradiated) USE is not known for all the Columbia vessel plates and welds. For those plates and welds for which the initial USE is known, USE was projected using Regulatory Guide 1.99, Revision 2 methods. For the vessel plates and welds for which the initial USE is not known, USE equivalent margin analyses were performed using the Boiling Water Reactor Owners Group (BWROG) equivalent margin analysis (EMA) methodology. Results from the testing and analysis of surveillance materials were used in the EMA analyses.

All of the projected USE values for the vessel beltline plates, nozzle forgings, and welds for which the initial USE is known remain above 50 ft-lbs through the end of the period of extended operation (54 EFPY). For the vessel beltline plates and welds, for which the initial USE is not known, the maximum decrease in USE was found to be less than the assumed decrease in the associated generic equivalent margin analyses. The maximum predicted decreases in USE for 54 EFPY for these beltline plates and welds are bounded by the generic equivalent margin analyses. Therefore, the projected USE for the vessel beltline plates and welds is acceptable for the period of extended operation.

Energy Northwest agrees that all beltline materials, including the N12 instrumentation nozzles, must be considered when the licensee develops pressure-temperature limits for Columbia in accordance with 10 CFR Part 50, Appendix G and ASME Code, Section XI, Appendix G.

Energy Northwest will continue to develop future pressure-temperature limit curves considering all beltline plates, welds, and nozzles.

Disposition

Upper shelf energy TLAAs have been projected to the end of the period of extended operation for all reactor vessel beltline materials. Additionally, a specific 54 EFPY equivalent margins analysis will be performed for the N12 nozzle forgings prior to the period of extended operation.

A.2.2.1.3 Adjusted Reference Temperature Analysis

In addition to USE, the other key parameter that characterizes the fracture toughness of a material is the RT_{NDT}. This reference temperature changes as a function of exposure to neutron radiation resulting in an adjusted reference temperature, ART.

The initial RT_{NDT} is the reference temperature for the unirradiated material. The change due to neutron radiation is referred to as ΔRT_{NDT}. The ART is calculated by adding the initial RT_{NDT}, the ΔRT_{NDT}, and a margin to account for uncertainties as prescribed in Regulatory Guide 1.99, Revision 2.

The ART evaluations of record for the vessel beltline plates, nozzle forgings, and welds for the currently licensed period (33.1 EFPY) include power uprate conditions. Based on projected fluence values, the methodology in Regulatory Guide 1.99 was used to project the ART for 54 EFPY. The ART values projected to 54 EFPY are used to develop P-T limit curves. Projected ART values are well below the 200°F end of life ART suggested in Section 3 of Regulatory Guide 1.99 and are, thus, acceptable for the period of extended operation.

Disposition

Reactor vessel adjusted reference temperature TLAAs have been projected to the end of the period of extended operation.

A.2.2.1.4 Pressure-Temperature Limits

To ensure that adequate margins of safety are maintained for various modes of reactor operation, 10 CFR 50, Appendix G specifies pressure and temperature requirements for affected materials for the service life of the reactor vessel. The basis for these fracture toughness requirements is ASME Section XI, Appendix G. The ASME Code requires P-T limits be established for hydrostatic pressure tests and leak tests; for operation with the core not critical during heatup and cooldown; and for core critical operation.

The Columbia P-T limit curves were revised in 2005 to include the effects of power uprate to 3486 MWt and dispositioned as bounding for uprate to 3544 MWt. The P-T limits are valid for 33.1 EFPY through the end of the currently licensed period. The curves were reviewed in 2009 to assure that the N12 instrumentation nozzle did not affect the existing curves. P-T limits for the period of extended operation will be calculated using the most accurate fluence projections available at the time of the recalculation. The projections may be adjusted if there are changes in core design or if additional surveillance capsule results show the need for an adjustment. The projected ART for the period of extended operation above gives confidence that future P-T curves will provide adequate operating margin.

Energy Northwest will continue to develop pressure-temperature limits in accordance with the Title 10 of the Code of Federal Regulations Part 50, Appendix G (10 CFR Part 50, Appendix G) and ASME Code, Section XI, Appendix G, considering all beltline plates, welds, and nozzles.

License amendment requests to revise the P-T limits will be submitted to the NRC for approval, when necessary to comply with 10 CFR 50 Appendix G, as part of the Reactor Vessel Surveillance Program.

Disposition

The TLAA for P-T limits will be adequately managed for the period of extended operation as part of the Reactor Vessel Surveillance Program.

A.2.2.1.5 Reactor Vessel Circumferential Weld Inspection Relief

BWRVIP-74-A, "BWR Vessel and Internals Project, BWR Reactor Pressure Vessel Inspection and Flaw Evaluation Guidelines for License Renewal," reiterated the recommendation of BWRVIP-05, "BWR Vessel and Internals Project, BWR Reactor Pressure Vessel Shell Weld Inspection Recommendations," that vessel circumferential welds could be exempted from examination. The NRC safety evaluation report (SER) for BWRVIP-74 agreed, but required that plants apply for this relief request individually. The relief request is required to demonstrate that at the expiration of the current license, the circumferential welds will satisfy the limiting conditional failure probability in the (BWRVIP-05) evaluation. Energy Northwest requested and received permanent relief from vessel shell circumferential (girth) weld volumetric examinations through 33.1 EFPY.

The reactor pressure vessel circumferential weld parameters at 51.6 EFPY have been projected to remain within the bounding (64 EFPY) vessel parameters from the BWRVIP-05 SER. As such, the conditional probability of failure for circumferential welds remains below the limits contained in the SER for BWRVIP-05.

Disposition

The TLAA for reactor vessel circumferential weld examination relief has been projected to the end of the period of extended operation.

A.2.2.1.6 Reactor Vessel Axial Weld Failure Probability

The NRC SER for BWRVIP-74-A evaluated the failure frequency of axially oriented welds in BWR reactor vessels, and determined failure frequency acceptance criteria for 40 years of reactor operation. Applicants for license renewal are required to evaluate axially oriented vessel welds to show that their failure frequency remains below the acceptance criteria in the SER for BWRVIP-74. An acceptable way to do this is to show that the mean RT_{NDT} of the limiting axial beltline weld at the end of the period of extended operation is less than the values specified in the SER.

The Columbia limiting axial weld mean RT_{NDT} at 54 EFPY is projected to remain well below the RT_{NDT} from the SER for BWRVIP-74, thus the Columbia axial weld failure frequency meets the acceptable criteria.

Disposition

The TLAA for the reactor vessel axial weld failure probability has been projected to the end of the period of extended operation.

A.2.2.2 METAL FATIGUE

Fatigue evaluations for mechanical components are identified as TLAAs; therefore, the effects of fatigue must be addressed for license renewal. Fatigue is an age-related degradation mechanism caused by cyclic duty on a component by either mechanical or thermal loads.

The ASME Boiler and Pressure Vessel Code requires evaluation of transient thermal and mechanical load cycles for Class 1 components. Cumulative usage factors for Class 1 components are calculated based on normal and upset design transient definitions. The design transients used to generate cumulative usage factors for Class 1 components are contained in FSAR Section 3.9.1.1. Energy Northwest is required to monitor design transients listed in FSAR Table 3.9-1 to ensure that plant components are maintained within the design limits.

Calculation of fatigue usage values is not required for non-Class 1 SSCs. Instead, stress intensification factors and lower stress allowables are used to ensure components are adequately designed for fatigue.

The reactor coolant environmental effects of fatigue on plant components were also evaluated.

The design cycles for Columbia are summarized in FSAR Section 3.9 and FSAR Table 3.9-1. Energy Northwest counts all fatigue significant cycles, not only for the design transients listed in FSAR Table 3.9-1 but also for the analysis of other plant components. The events listed in FSAR Table 3.9-1 have been evaluated and in some cases regrouped for easier counting. Faulted conditions listed in the FSAR are not used in the fatigue analyses and are not counted. Additional transients determined to be fatigue significant after the original design have been added to the counting procedure, while FSAR Table 3.9-1 lists the original design cycles. The projected number of occurrences of design transients to 60 years determined that some analyzed numbers of transients may be exceeded. These projections were done using linear extrapolation from the beginning of plant life. Recent operating experience suggests lower projections and as additional operating data is accumulated, subsequent projections will refine the number of cycles expected in 60 years. Energy Northwest manages fatigue using the Fatigue Monitoring Program to track transient cycles and require corrective action before any analyzed number of cycles is reached.

A.2.2.2.1 Reactor Pressure Vessel Fatigue Analyses

The reactor vessel assembly consists of the reactor pressure vessel (RPV), the vessel support skirt, the shroud support, nozzles, penetrations, stub tubes, head closure flanges, head closure studs, refueling bellows support, and stabilizer brackets.

Design cumulative usage factors (CUFs) for the limiting RPV assembly locations are contained in design reports and were calculated based on the design transients. Energy Northwest manages fatigue for the RPV assembly components using the Fatigue Monitoring Program to track transient cycles and requires corrective action before any analyzed number of cycles is reached.

Disposition

The effects of aging on the intended functions of the RPV will be adequately managed for the period of extended operation by the Fatigue Monitoring Program.

A.2.2.2.2 Reactor Pressure Vessel Internals

Fatigue analyses of the overall RPV internals (including the jet pump assemblies) were performed pre-startup as part of the plant design. Component specific fatigue analyses of the jet pumps were performed more recently to bound actual plant operation. Each of these analyses is discussed below.

Reactor Vessel Internals Fatigue Analyses

The RPV internals are described in terms of two assemblies: core support structures and reactor internals. Core support structures include the shroud, shroud support (included as part of the reactor vessel for fatigue), core plate with core plate hold-down bolts, top guide, fuel supports, and control rod guide tubes. Reactor internals include the jet pump assemblies, jet pump instrumentation, feedwater spargers, vessel head spray nozzle, differential pressure line, incore flux monitor guide tubes, surveillance sample holders, core spray line (in-vessel) and spargers, incore instrument housings, low pressure coolant injection coupling, steam dryer, shroud head and steam separator assembly, guide rods, and control rod drive thermal sleeves.

The normal, test, and upset service load cycles used for the design and fatigue analysis for the core support structures and reactor internals are shown in FSAR Table 3.9-1. Calculation of CUFs for the reactor internals was performed as part of a NSSS design evaluation.

Review of the RPV internals in association with power uprate determined that stresses on the vessel internals remained well below all limits. No recalculation of cumulative usage factors was determined to be required. Energy Northwest manages fatigue using the Fatigue Monitoring Program to track transient cycles and require corrective action before any analyzed number of cycles is reached.

Disposition

The effects of aging on the intended functions of the RPV internals will be adequately managed for the period of extended operation by the Fatigue Monitoring Program.

Jet Pump Fatigue Analyses

In August 2000, Columbia operated for a period of time with the recirculation pumps in an unbalanced mode (pump speeds different by more than 50 percent). The effect of that flow imbalance on the jet pumps was an additional accumulation of fatigue usage.

As a result of inspections during the Spring 2001 outage (R-15), a fatigue analysis of the jet pumps was performed and cumulative usage factors were determined.

Jet pump clamps were installed during the 2005 outage (R-17) to minimize flow induced vibration. These clamps greatly reduced the future potential for riser brace fatigue.

As a result of evaluations after the 2007 outage the usage factors were extended to 60 years. The maximum CUF of the jet pump risers for 60 years of operation is projected to remain below the fatigue limit. Energy Northwest manages fatigue using the Fatigue Monitoring Program to track transient cycles and require corrective action before any analyzed number of cycles is reached. The Fatigue Monitoring Program credits the BWR Vessel Internals Program

to monitor the jet pump gaps. Together, these actions effectively manage the fatigue of the jet pumps through the period of extended operation.

Disposition

The effects of aging on the intended functions of the jet pumps will be adequately managed for the period of extended operation by the Fatigue Monitoring Program.

A.2.2.2.3 Reactor Coolant Pressure Boundary Piping and Piping Component Fatigue Analyses

The Class 1 boundary encompasses all reactor coolant pressure boundary piping (pipe and fittings) and in-line components subject to ASME Section XI, Subsection IWB, inspection requirements. Fatigue analyses of Class 1 piping are based on the transients found in the Columbia piping specifications that are in turn based on the design transients listed in FSAR Section 3.9.

Potential high energy line break (HELB) intermediate locations can be eliminated based on CUFs of less than 0.1 if other stress criteria are also met. The usage factors, as calculated in the design fatigue analyses, account for the design transients assumed for the original 40-year life of the plant. Therefore, the determination of CUFs used in the selection of postulated high energy line intermediate break locations are TLAAs. The Fatigue Monitoring Program will identify when the transients for piping systems are approaching their analyzed number of cycles. Prior to any transient exceeding its analyzed number of cycles for a piping system, the associated analyses will be reviewed to determine whether any additional locations need to be designated as postulated HELB locations.

All Class 1 piping was reviewed for the power uprate. The evaluation determined that there was adequate margin in each system to accommodate the power uprate. Design fatigue usage for 40 years of operation and projected fatigue usage for the period of extended operation are established for the limiting reactor coolant pressure boundary components.

A review of documentation found several fatigue analyses for Class 1 valve stress reports found fatigue analyses that were TLAAs. The fatigue usage for those valves is based on transients that are tracked by the Fatigue Monitoring Program.

Metal fatigue for all Class 1 reactor coolant pressure boundary piping and in-line components is managed by the Fatigue Monitoring Program. The Fatigue Monitoring Program will identify when the transients for piping systems are approaching their analyzed numbers of cycles. Prior to any transient exceeding its analyzed number of cycles for a piping system, the design calculations for that system will be reviewed and appropriate actions will be taken.

Disposition

The effects of aging on the intended functions of the reactor coolant pressure boundary piping and components will be adequately managed for the period of extended operation by the Fatigue Monitoring Program.

A.2.2.3 NON-CLASS 1 COMPONENT FATIGUE ANALYSES

The non-Class 1 mechanical components susceptible to fatigue fit into one of two major categories: (1) piping and in-line components (piping, valves, tubing, traps, thermowells, etc.) or (2) non-piping components (vessels, heat exchangers, tanks, pumps, etc.).

Non-Class 1 components that are Quality Group B or C are designed and constructed as ASME Section III Code Class 2 and 3, respectively. The design of ASME Class 2 and 3 piping systems incorporates a stress range reduction factor for determining acceptability of piping design with respect to thermal stresses. Non-Class 1 components designated as Quality Class D are designed to ANSI B31.1, which also incorporates stress range reduction factors based upon the number of thermal cycles. In general, a stress range reduction factor of 1.0 in the stress analyses applies for up to 7,000 thermal cycles. The allowable stress range is reduced by the stress range reduction factor if the number of thermal cycles exceeds 7,000. If fewer than 7,000 cycles are expected through the period of extended operation, then the fatigue analysis (stress range reduction factor) of record will remain valid through the period of extended operation.

Because none of the non-Class 1 vessels, heat exchangers, storage tanks, or pumps were designed to ASME Section VIII, Division 2 or ASME Section III, Subsection NC-3200, no fatigue evaluation is required. Therefore, there are no fatigue TLAAs for these components.

The fatigue evaluation of non-Class 1 piping and in-line components evaluated the associated operating temperature against the threshold temperature value for fatigue of the material. If the threshold temperature value was exceeded, then the number of transient cycles for the piping or in-line component was projected. In each case, the number of projected cycles for 60 years was found to be less than 7,000 for piping and in-line components whose temperatures exceed threshold values. Therefore, fatigue for non-Class 1 piping and in-line components remains valid for the period of extended operation.

Disposition

The TLAA for non-Class 1 component fatigue analyses remains valid for the period of extended operation.

A.2.2.4 EFFECTS OF REACTOR COOLANT ENVIRONMENT ON FATIGUE LIFE OF COMPONENTS AND PIPING

Applicants for license renewal are required to address the reactor coolant environmental effects on fatigue of plant components. The minimum set of components for a BWR of Columbia's vintage is derived from NUREG/CR-6260, "Application of NUREG/CR-5999 Interim Fatigue Curves to Selected Nuclear Power Plant Components," as follows:

1. Reactor vessel shell and lower head
2. Reactor vessel feedwater nozzle
3. Reactor recirculation piping (including inlet and outlet nozzles)
4. Core spray line reactor vessel nozzle and associated Class 1 piping
5. Residual heat removal return line Class 1 piping
6. Feedwater line Class 1 piping

Energy Northwest has analyzed these locations for the effects of the reactor coolant environment on fatigue in support of license renewal. Energy Northwest has also analyzed other limiting components beyond those locations indentified in NUREG/CR-6260 for the effects of the reactor coolant environment. Original fatigue usage calculations were reviewed, and the transient groupings and load pairs used in those analyses were carried over to the environmentally-assisted fatigue analyses, with revised non-environmentally assisted usage factors determined.

An effective fatigue life adjustment factor, F_{en}, that considers a time weighted average of operation with normal water chemistry and hydrogen water chemistry over 60 years of operation, was determined for each load pair analyzed for the components. The fatigue life adjustment factors were applied to the revised component load pair usage factors, and the environmentally-adjusted usage factors were summed to obtain environmentally-adjusted CUFs to verify acceptability of the components for the period of extended operation.

Using fatigue data projected by the Fatigue Monitoring Program and the methodology summarized above, the limiting locations were evaluated. None of the locations evaluated have an environmentally adjusted CUF of greater than 1.0 during the period of extended operation.

For the period of extended operation, on an ongoing basis, ensure that all the limiting locations in Class 1 components and Class 1 systems have been evaluated for the effect of reactor water environment.

The aging effect of fatigue, including consideration of the environmental effects, will be adequately managed for the period of extended operation using the Fatigue Monitoring Program.

Disposition

The effects of environmentally-assisted fatigue on the intended functions of the NUREG/CR-6260 and other limiting locations will be adequately managed for the period of extended operation using the Fatigue Monitoring Program.

A.2.2.5 ENVIRONMENTAL QUALIFICATION OF ELECTRICAL EQUIPMENT

Environmental qualification analyses for electrical equipment are identified as TLAAs. NRC regulation 10 CFR 50.49, "Environmental Qualification of Electric Equipment Important to Safety for Nuclear Power Plants," requires licensees to identify electrical equipment covered under this regulation and to maintain a qualification file demonstrating that the equipment is qualified for its application and will perform its safety function up to the end of its qualified life. The EQ Program implements the requirements of 10 CFR 50.49 and will be used to manage the effects of aging on the intended functions of the components associated with environmental qualification TLAAs for the period of extended operation.

Disposition

The effects of aging on the intended functions of the environmentally qualified components will be adequately managed for the period of extended operation by the EQ Program.

A.2.2.6 FATIGUE OF PRIMARY CONTAINMENT, ATTACHED PIPING, AND COMPONENTS

The Primary Containment and attached piping and components susceptible to fatigue resulting from the effects of plant transients are evaluated below.

A.2.2.6.1 Primary Containment

The cycles used in the fatigue evaluation of the containment components are provided in FSAR Table 3A.4.1-3. No operating basis earthquakes have been experienced by Columbia through 2007, and the containment analysis for five operating basis earthquakes remains valid for 60 years of plant operation. The safe shutdown earthquake and post-loss of coolant accident (LOCA) chugging are once in a lifetime events and are not projected to occur during the extended period of operation. Safety relief valve actuations have been projected through 60 years of operation based on the number of actual events through 2007. The fatigue analyses performed using these events will remain valid for the period of extended operation.

As the cycles on which the containment fatigue analysis is based will not be exceeded for 60 years of operation, these analyses will remain valid for the period of extended operation.

Disposition

The TLAA associated with fatigue of the containment remains valid for the period of extended operation.

A.2.2.6.2 ASME Class MC Components

Class MC components include the primary containment vessel shell, large openings (equipment hatch, personnel hatches, and access hatch), penetrations (all except the large openings), and attachments (pipe supports in the wetwell, welding pads in the drywell, supports for the stabilizer truss, seal and shear lugs at the drywell floor, supports for the downcomer bracing system, pipe whip supports, radial beam supports, cap truss supports, catwalks, monorail, and platforms). The Class MC components were analyzed for fatigue using the transients listed in FSAR Table 3A.4.1-3. As these cycles will not be exceeded for 60 years of operation, the Class MC component fatigue analysis will remain valid for the period of extended operation.

A specific fatigue analysis was performed for the main steam penetrations using the transients listed in FSAR Table 3A.4.1-3. This analysis will remain valid for the period of extended operation as these cycles will not be exceeded for 60 years of operation.

The effects of power uprate on the containment system response were reviewed and determined to be negligible. The containment peak pressure values remain virtually unaffected by the power uprate and extended load line limit. The LOCA containment dynamic loads are not affected by power uprate, and safety relief valve containment loads will remain below their design allowables. (See FSAR Section 3A.)

All events, including safety relief valve actuations, for 60 years of operation are projected to remain below the containment cyclic basis from FSAR Table 3A.4.1-3. Consequently, the analysis of the Class MC containment components remains valid for the period of extended operation.

Disposition

The TLAAs for fatigue of the ASME Class MC components remain valid through the end of the period of extended operation.

A.2.2.6.3 Downcomers

Although not an ASME Code requirement, a fatigue evaluation of the downcomers was performed. The fatigue evaluation of the downcomer lines in the wetwell air volume was

based on the number of cycles presented in FSAR Table 3A.4.1-3. The maximum fatigue usage factor for the downcomers is provided in FSAR Table 3A.4.2-4 and FSAR Table 3A.4.2-5.

All events, including safety relief valve actuations, for 60 years of operation are projected to remain below the containment cyclic basis from FSAR Table 3A.4.1-3. Consequently, the analysis of the downcomers remains valid for the period of extended operation.

Disposition

The TLAA for fatigue of the downcomers remains valid through the end of the period of extended operation.

A.2.2.6.4 Safety Relief Valve Discharge Piping

Although not an ASME Code requirement, a fatigue evaluation of the safety relief valve (SRV) discharge piping was performed. The fatigue evaluation used the number of cycles as presented in FSAR Table 3A.4.1-3. The maximum fatigue usage factor for all 18 SRV discharge lines in the wetwell air volume is below the ASME allowable limits per FSAR Section 3A.4.2.4.6.

The SRV actuations for 60 years of operation are projected to remain below the containment cyclic basis from FSAR Table 3A.4.1-3. Consequently, the analysis of the SRV discharge piping remains valid for the period of extended operation.

Disposition

The TLAA for fatigue of the SRV discharge piping remains valid through the end of the period of extended operation.

A.2.2.6.5 Diaphragm Floor Seal

The diaphragm floor seal is located at the inside surface of the primary containment vessel periphery. It provides a flexible, pressure tight seal between the primary containment vessel and the diaphragm floor and is capable of accommodating differential thermal expansion between them.

The fatigue evaluation was performed using the cycles in FSAR Table 3A.4.1-3. The maximum cumulative usage factor is less than the fatigue limit per FSAR Table 3A.4.1-5. All events, including SRV actuations, for 60 years of operation are projected to remain below the containment cyclic basis from FSAR Table 3A.4.1-3. Consequently, the analysis of the diaphragm floor seal remains valid for the period of extended operation.

Disposition

The TLAA for fatigue of the containment diaphragm floor seal remains valid through the end of the period of extended operation.

A.2.2.6.6 ECCS Suction Strainers

The original Columbia ECCS suction strainers were replaced with a new strainer design constructed from cold-worked austenitic stainless steel. A linear elastic fracture mechanics analysis was performed to bound all the martensitic material in the suction strainer screens. A crack depth was assumed based on the depth of the Alpha Prime martensite in the strainer screen material.

Cyclic stresses were considered in the crack growth analysis of the suction strainers. The fatigue crack evaluation determined that the assumed cracks will not propagate to a critical size for the remaining life of the plant. The maximum computed stress intensity value (K) was less than that required to cause cracking in Alpha martensite formed in austenitic stainless steel.

The stress value conservatively included direct pressure and inertial components from SRV actuation, operating basis earthquake (OBE) loads, and SRV steam chugging. (See FSAR Table 3A.4.1-3.)

All events, including safety relief valve actuations, for 60 years of operation are projected to remain below the containment cyclic basis from FSAR Table 3A.4.1-3. Consequently, the analysis of the ECCS suction strainers remains valid for the period of extended operation.

Disposition

The TLAA for crack growth of the ECCS suction strainers remains valid through the end of the period of extended operation.

A.2.2.7 OTHER PLANT-SPECIFIC TIME-LIMITED AGING ANALYSES

The TLAAs that do not fit into any of the previous major categories are evaluated below.

A.2.2.7.1 Reactor Vessel Shell Indications

Two indications in the reactor vessel shell were identified using ultrasonic inspection methods during the 2005 inservice inspections. The indications were present in past inservice inspection examinations, but became rejectable under current ASME Section XI, IWB-3610 requirements. The rejected indications were evaluated and determined to be acceptable for continued service without repair, as reported to the NRC. The indications were evaluated per the guidelines of ASME Section XI, IWB-3610, which include acceptance criteria based on the

applied stress intensity factors, using conservative assumptions in the applied stresses to determine the stress intensity factors for comparison to Code allowables.

This conservative evaluation calculated a fatigue crack growth at the end of 33.1 EFPY vessel service life that is insignificant in comparison to the bounding initial crack size. It also determined that the applied stress intensity factor is well below the allowable stress intensity factor.

The calculation is based on time-limited assumptions of neutron fluence and SRV blowdown cycles for 40 years. While it is not expected that the applied stress intensity factor will exceed the allowable fracture toughness during the period of extended operation, cracking near the subject reactor vessel welds is managed by the Inservice Inspection (ISI) Program.

Energy Northwest will re-evaluate the indication based on the results of the 2015 inspection and either project this analysis through the period of extended operation or continue augmented inspections as required by the ASME code.

Disposition

Cracking of the reactor vessel shell near welds BG and BM will be adequately managed through the period of extended operation by the Inservice Inspection (ISI) Program.

A.2.2.7.2 Sacrificial Shield Wall

FSAR Section 3.8.3.6 provides a value of neutron fluence for the outside face of the sacrificial shield wall that is based on 40 years of plant operation. Projections done for 60 years of operation, including increase in fluence due to power uprate, determined that the estimated neutron fluence on the sacrificial shield wall will remain below the threshold for neutron damage of concrete and reinforcing steel. Therefore, the sacrificial shield wall can be expected to perform its radiation shielding function through the period of extended operation.

Disposition

The TLAA associated with the sacrificial shield wall fluence has been projected to the end of the period of extended operation.

A.2.2.7.3 Main Steam Flow Restrictor Erosion Analyses

The main steam line flow restrictors are designed to limit coolant flow rate from the reactor vessel (before the MSIVs are closed) to less than 200 percent of normal flow in the event of a main steam line break outside the containment. Erosion of a flow restrictor is a safety concern since it could impair the ability of the flow restrictor to limit vessel blowdown following a main steam line break. Since erosion is a time-related phenomenon, the analysis for the effect it has on the flow restrictors over the life of the plant is a TLAA. Cast stainless steel (SA351,

Type CF8) was selected for the steam flow restrictor material because it has excellent resistance to erosion-corrosion from high velocity steam.

The erosion of the main steam flow restrictors has been projected for the period of extended operation. The projection concludes that after 60 years of erosion on the main steam flow restrictors, the choked flow will still be less than 200 percent of normal flow. Therefore, the main steam flow restrictors will continue to perform their intended function and the existing accident radiological release analysis will remain valid for the period of extended operation.

Disposition

The TLAA for erosion of the main steam line flow restrictors has been projected to the end of the period of extended operation.

A.2.2.7.4 Core Plate Rim Hold-Down Bolts

The NRC safety evaluation report that references BWRVIP-25, "BWR Core Plate Inspection and Flaw Evaluation Guidelines," for license renewal identifies loss of preload on the core plate rim hold-down bolts as one of the TLAA that must be addressed by applicants seeking license renewal.

Disposition

At least two years prior to the period of extended operation, Energy Northwest will install core plate wedges unless:

- a site-specific analysis is approved by the NRC that resolves core plate bolt loss of preload due to both stress relaxation and cracking, or
- an NRC approved method is developed to inspect the core plate bolts for cracking and a site-specific analysis for loss of preload due to stress relaxation of the core plate bolts is approved by the NRC.

Resolution

Core plate wedges were installed in the Spring 2021 refueling outage under EC 17537.

A.2.2.7.5 Crane Load Cycle Limit

All in-scope cranes at Columbia were designed to Crane Manufacturers Association of America (CMAA) Specification 70, "*Specification for Electric Overhead Traveling Cranes*" which provides a design load cycle limit based on service class for the associated cranes. This load cycle limit for each crane was identified as a potential TLAA.

Disposition

To address this potential TLAA a 60-year projection of load cycles was developed for all cranes in the scope of license renewal and compared to the design load cycle limits of CMAA 70. For all cranes the 60-year projection of load cycles is within the applicable design load cycle limit of CMAA 70. Therefore, this TLAA remains valid for the period of extended operation.

A.3 REFERENCES

A.3-1 BWROG Report GE-NE-523-A71-0594-A, Rev 1, "Alternate BWR Feedwater Nozzle Inspection Requirements," May 2000

A.3-2 EPRI Report No. 1011838, "Recommendations for An Effective Flow Accelerated Corrosion Program (NSAC-202L-R3)," May 2006

A.3-3 EPRI TR-103834-P1-2, "Effects of Moisture on the Life of Power Plant Cables," August 1994

A.3-4 License Renewal – Interim Staff Guidance 2012-02 (LR-ISG-2012-02), Aging Management of Internal Surfaces, Fire Water Systems, Atmospheric Storage Tanks, and Corrosion Under Insulation

A.3-5 NUREG-2123, Volume 1, Safety Evaluation Report Related to the License Renewal of Columbia Generating Station

A.3-6 License Renewal – Interim Staff Guidance 2015-01 (LR-ISG-2015-01), Changes to Buried and Underground Piping and Tank Recommendations

Columbia License Renewal Commitments
Table A-1

Item Number Title	Commitment	Updated Final Safety Analysis Report (UFSAR) Supplement Section/LRA Section	Enhancement or Implementation Schedule	Source
1 Aboveground Steel Tanks Inspection	The Aboveground Steel Tanks Inspection is a new program. The Aboveground Steel Tanks Inspection detects and characterizes the conditions on the bottom surfaces of the condensate storage tanks. The program provides direct evidence as to whether, and to what extent, the relevant effects of aging have occurred in inaccessible areas.	A.1.2.1	Within the 10-year period prior to the period of extended operation. Then ongoing.	LRA Appendix B.2.1 January 19, 2010 Columbia Letter GO2-10-173 RAI B.2.1-3 December 7, 2010
2 Compressed Air Monitoring Program	The Compressed Air Monitoring Program monitors components that contain compressed air through periodic sampling. The Compressed Air Monitoring Program replaces the Air Quality Sampling Program and the Diesel Starting Air Inspection.	A.1.2.2	Implemented prior to entering the period of extended operation, continues during the extended period of operation by conducting opportunistic inspections.	LRA Appendix B.2.2 January 19, 2010
3 Appendix J Program	The Appendix J Program is an existing program that will be continued for the period of extended operation.	A.1.2.3	Ongoing	LRA Appendix B.2.3 January 19, 2010
4 Bolting Integrity Program	The Bolting Integrity Program is an existing program that will be continued for the period of extended operation.	A.1.2.4	Ongoing	LRA Appendix B.2.4 January 19, 2010
5 Buried Piping and Tanks Inspection Program	The Buried Piping and Tanks Inspection Program is an existing program that will be continued for the period of extended operation, with the following enhancements: Revise the site program document to include: • cracking, loss of material and loss of pre-load of bolting as aging effects managed by the program. • loss of material for (buried) stainless steel piping and piping components as an aging effect managed by the program. • components that are located underground (below grade) in areas, such as outdoor vaults, valve pits and inside guard pipes where access for inspection is restricted. • buried polymeric piping to confirm the absence of significant aging effect.	A.1.2.5	Enhancement prior to the period of extended operation. Then ongoing.	LRA Appendix B.2.5 January 19, 2010 Columbia Letter GO2-10-094 First Annual Update July 16, 2010 Columbia Letter GO2-10-179 RAI 3.4.2.3-1 December 21, 2010 Columbia Letter GO2-11-028 RAI B.2.5-2 January 28, 2011

Columbia License Renewal Commitments
Table A-1

<table>
<tr><th>Item Number
Title</th><th>Commitment</th><th>Updated Final Safety Analysis Report (UFSAR) Supplement Section/LRA Section</th><th>Enhancement or Implementation Schedule</th><th>Source</th></tr>
<tr><td></td><td>Revise the site program document to:

• require that inspection of a representative sample of each buried and underground piping material and buried tank be performed within the 10-year period prior to entering the period of extended operation (i.e., between year 30 and end of year 40) and in each 10 year interval of the period of extended operation (i.e., between year 40 and year 50, and again between year 50 and year 60) per the following table:

<table>
<tr><th rowspan="2">Material/Location (buried or underground)</th><th colspan="2">Number or percentage of Inspections (per 10-Year interval through end of the period of extended operation)</th></tr>
<tr><th>Code-Class/ Safety-Related/ Other</th><th>Hazmat</th></tr>
<tr><td>Polymer/Buried</td><td>1</td><td>--</td></tr>
<tr><td>Stainless Steel/Buried</td><td>1</td><td>--</td></tr>
<tr><td>Steel/Buried</td><td>1</td><td>2%</td></tr>
<tr><td>Stainless Steel/Underground</td><td>1</td><td>--</td></tr>
<tr><td>Steel/Underground</td><td>2</td><td>2%</td></tr>
<tr><td>Steel Tank/Buried</td><td>1</td><td>--</td></tr>
</table>

• require appropriate tactile (e.g., manual) examination of buried polymeric components to supplement visual inspections for confirmation that significant aging effect are not occurring.
• require wall thickness measurement by a non-destructive examination technique such as ultrasonic testing (UT) and results documentation for further evaluation, if loss of material has been detected.</td><td></td><td></td><td></td></tr>
</table>

Columbia License Renewal Commitments
Table A-1

Item Number Title	Commitment	Updated Final Safety Analysis Report (UFSAR) Supplement Section/LRA Section	Enhancement or Implementation Schedule	Source
	• require confirmation that backfill is acceptable with regards to degradation of pipe coatings, and thereby, meets the objectives of NACE SP0169-2007. • periodic soil testing (every 10 years) • include trending of the external surface condition or coating condition of buried and underground piping, piping components and buried tanks and adjustment of the program as needed based on the results. Revise the site program document for acceptance criteria associated with the inspections: • backfill is acceptable with regard to degradation of pipe external coatings and, thereby, meets the objectives of NACE Standard SP0169-2007. • for coated piping or tanks, either no evidence of coating degradation or the type and extent of coating degradation determined to be insignificant as evaluated by an individual with the qualification to evaluate coatings. • If coated or uncoated metallic piping show evidence of corrosion, the remaining wall thickness in the affected area is determined to ensure that the minimum wall thickness is maintained. • cracking or blistering of polymeric piping is evaluated			
6 BWR Feedwater Nozzle Program	The BWR Feedwater Nozzle Program is an existing program that will be continued for the period of extended operation.	A.1.2.6	Ongoing	LRA Appendix B.2.6 January 19, 2010
7 BWR Penetrations Program	The BWR Penetrations Program is an existing program that will be continued for the period of extended operation.	A.1.2.7	Ongoing	LRA Appendix B.2.7 January 19, 2010
8 BWR Stress Corrosion Cracking Program	The BWR Stress Corrosion Cracking Program is an existing program that will be continued for the period of extended operation.	A.1.2.8	Ongoing	LRA Appendix B.2.8 January 19, 2010

Columbia License Renewal Commitments
Table A-1

Item Number Title	Commitment	Updated Final Safety Analysis Report (UFSAR) Supplement Section/LRA Section	Enhancement or Implementation Schedule	Source
9 BWR Vessel ID Attachment Welds Program	The BWR Vessel ID Attachment Welds Program is an existing program that will be continued for the period of extended operation.	A.1.2.9	Ongoing	LRA Appendix B.2.9 January 19, 2010
10 BWR Vessel Internals Program	The BWR Vessel Internals Program is an existing program that will be continued for the period of extended operation. In addition, this program provides screening criteria to determine the susceptibility of cast austenitic stainless steels (CASS) reactor vessel internals to thermal aging and neutron fluence as stated in A.2.1.10.	A.1.2.10	Ongoing	LRA Appendix B.2.10 January 19, 2010
11 BWR Water Chemistry Program	The BWR Water Chemistry Program is an existing program that will be continued for the period of extended operation.	A.1.2.11	Ongoing	LRA Appendix B.2.11 January 19, 2010
12 Chemistry Program Effectiveness Inspection	The Chemistry Program Effectiveness Inspection is a new activity. The Chemistry Program Effectiveness Inspection detects and characterizes the condition of materials in representative low flow and stagnant areas of systems with water chemistry controlled by the BWR Water Chemistry Program or the Closed Cooling Water Chemistry Program, and with fuel oil chemistry controlled by the Fuel Oil Chemistry Program. The inspection provides direct evidence as to whether, and to what extent, the relevant effects of aging have occurred.	A.1.2.12	Within the 10-year period prior to the period of extended operation.	LRA Appendix B.2.12 January 19, 2010
13 Closed Cooling Water Chemistry Program	The Closed Cooling Water Chemistry Program is an existing program that will be continued for the period of extended operation, with the following enhancement: Ensure that at least one additional reactor closed cooling water corrosion rate measurement is performed and evaluated prior to entering the period of extended operation to provide direct information as to the effectiveness of the chemical treatments. If necessary, based on the results, establish a frequency for subsequent measurements.	A.1.2.13	Enhancement prior to the period of extended operation Then ongoing.	LRA Appendix B.2.13 January 19, 2010
14 Inspection of Internal Surfaces of Miscellaneous Piping and Ducting Program	The Inspection of Internal Surfaces of Miscellaneous Piping and Ducting (ISMPD) Program manages fouling, cracking, loss of material, and change in material properties using opportunistic visual inspections of the internal surfaces of piping and other components during periodic surveillances or maintenance activities when the surfaces are accessible for visual inspection during the period of extended operation. This opportunistic approach is supplemented as needed to ensure a representative samples is achieved in each 10-year interval of the period of extended operation. At a minimum, in each 10-year interval during the period of extended operation a representative sample of 20% of the population (defined as components having the same combination of material, environment, and aging effect) or a maximum of 25 components per population is inspected.	A.2.1.14	Implementation prior to the period of extended operation and initial inspections within the 10-year period after entering the period of extended operation. Then ongoing	LDCN-21-041

Columbia License Renewal Commitments
Table A-1

Item Number Title	Commitment	Updated Final Safety Analysis Report (UFSAR) Supplement Section/LRA Section	Enhancement or Implementation Schedule	Source
15 CRDRL Nozzle Program	The CRDRL Nozzle Program is an existing program that will be continued for the period of extended operation.	A.1.2.15	Ongoing	LRA Appendix B.2.15 January 19, 2010
16 Diesel Starting Air Inspection	The Diesel Starting Air Inspection is described in NUREG-2123, section 3.0.3.1.11 (reference A.3-5). This program has been replaced by the Compressed Air Monitoring Program.	A.1.2.16	Implemented prior to entering the period of extended operation, continues during the extended period of operation by conducting opportunistic inspections.	LRA Appendix B.2.16 January 19, 2010
17 Diesel Systems Inspection Program	The Diesel Systems Inspection Program is described in NUREG-2123, section 3.0.3.1.12 (reference A.3-5). This program has been subsumed into the Inspection of Internal Surfaces of Miscellaneous Piping and Ducting Program (A.2.1.14)	A.2.1.14	A.2.1.17 has been subsumed into A.2.1.14	LDCN-21-041
18 Diesel-Driven Fire Pumps Inspection Program	The Diesel-Driven Fire Pumps Inspection Program is described in NUREG-2123, section 3.0.3.1.13 (reference A.3-5). This program has been subsumed into the Inspection of Internal Surfaces of Miscellaneous Piping and Ducting Program (A.2.1.14)	A.2.1.14	A.2.1.18 has been subsumed into A.2.1.14	LDCN-21-041
19 Electrical Cables and Connections Not Subject to 10 CFR 50.49 EQ Requirements Program	The Electrical Cables and Connections Not Subject to 10 CFR 50.49 EQ Requirements Program is a new program. The Electrical Cables and Connections Not Subject to 10 CFR 50.49 EQ Requirements Program is an inspection program that detects degradation of electrical cables and connections that are not environmentally qualified and are within the scope of license renewal. The program provides for the periodic visual inspection of accessible, non-environmentally qualified cables and connections in order to determine if age-related degradation is occurring, particularly in plant areas with adverse localized environments.	A.1.2.19	Implementation prior to the period of extended operation. Then ongoing.	LRA Appendix B.2.19 January 19, 2010

Columbia License Renewal Commitments
Table A-1

Item Number Title	Commitment	Updated Final Safety Analysis Report (UFSAR) Supplement Section/LRA Section	Enhancement or Implementation Schedule	Source
20 Electrical Cables and Connections Not Subject to 10 CFR 50.49 EQ Requirements Used in Instrumentation Circuits Program	The Electrical Cables and Connections Not Subject to 10 CFR 50.49 EQ Requirements Used in Instrumentation Circuits Program is a new program. The Electrical Cables and Connections Not Subject to 10 CFR 50.49 EQ Requirements Used in Instrumentation Circuits Program is a monitoring program that detects degradation of electrical cables and connections that are not environmentally qualified and used in circuits with sensitive, low-current applications. The program provides for a review of calibration records for low-current instruments, in order to detect and identify degradation of the cable system insulation resistance. The program retains the option to perform direct cable testing.	A.1.2.20	Implementation prior to the period of extended operation. Then ongoing.	LRA Appendix B.2.20 January 19, 2010
21 Electrical Cable Connections Not Subject to 10 CFR 50.49 EQ Requirements Inspection	The Electrical Cable Connections Not Subject to 10 CFR 50.49 EQ Requirements Inspection is a new activity. The Electrical Cable Connections Not Subject to 10 CFR 50.49 EQ Requirements Inspection detects and characterizes the material condition of metallic electrical connections within the scope of license renewal. The inspection uses thermography (augmented by contact resistance testing) to detect loose or degraded connections that lead to increased resistance for a representative sample of metallic electrical connections in various plant locations.	A.1.2.21	Within the 10-year period prior to the period of extended operation.	LRA Appendix B.2.21 January 19, 2010
22 EQ Program	The EQ Program is an existing program that will be continued for the period of extended operation.	A.1.2.22 A.1.3.5	Ongoing	LRA Appendix B.2.22 January 19, 2010
23 External Surfaces Monitoring Program	The External Surfaces Monitoring Program is an existing program that will be continued for the period of extended operation, with the following enhancements: • add aluminum, copper alloy, copper alloy >15 % Zn, gray cast iron, stainless steel (including CASS), and elastomers to the program scope. • add cracking as an aging effect for aluminum components. • add visual (VT-1 or equivalent) or volumetric examination techniques to detect cracking. • add hardening and loss of strength as aging effects for elastomer- based mechanical sealants in HVAC systems. • add physical examination techniques in addition to visual inspection to detect hardening and loss of strength for elastomer-based mechanical sealants in HVAC systems.	A.1.2.23	Enhancement prior to the period of extended operation Then ongoing.	LRA Appendix B.2.23 January 19, 2010 Columbia Letter GO2-10-094 First Annual Update July 16, 2010 Columbia Letter GO2-11-025 RAI B.2.14-1 January 28, 201

Columbia License Renewal Commitments
Table A-1

Item Number Title	Commitment	Updated Final Safety Analysis Report (UFSAR) Supplement Section/LRA Section	Enhancement or Implementation Schedule	Source
24 Fatigue Monitoring Program	The Fatigue Monitoring Program is an existing program that will be continued for the period of extended operation, with the following enhancements: • Columbia has analyzed the effects of the reactor coolant environment on fatigue for the six locations recommended by NUREG\CR-6260. These analyses are based on the projected cycles for 60 years of operation (plus some conservatism) rather than the original design cycles in FSAR Table 3.9-1. The Fatigue Monitoring Program will be enhanced to ensure that action will be taken when the lowest number of analyzed cycles is approached. – For each location that may exceed a CUF of 1.0 (due to projected cycles exceeding analyzed, or due to as-yet undiscovered industry issues), the Fatigue Monitoring Program will implement one or more of the following: (1) Refine the fatigue analyses to determine valid CUFs less than 1.0, (2) Manage the effects of aging due to fatigue at the affected locations by an inspection program that has been reviewed and approved by the NRC, or (3) Repair or replace the affected locations before exceeding a CUF of 1.0. • Correlate information relative to fatigue monitoring and provide more definitive verification that the transients monitored and their limits are consistent with or bound the FSAR and the supporting fatigue analyses, including the environmentally-assisted fatigue analyses.	A.1.2.24 A.1.3.2 A.1.3.4	Enhancement prior to the period of extended operation. Then ongoing.	LRA Appendix B.2.24 January 19, 2010
25 Fire Protection Program	The Fire Protection Program is an existing program that will be continued for the period of extended operation.	A.1.2.25	Ongoing	LRA Appendix B.2.25 January 19, 2010
26 Fire Water Program	The Fire Water Program is an existing program that will be continued for the period of extended operation, with the following enhancements: • perform either ultrasonic testing or internal visual inspection of representative portions of above ground fire protection piping that are exposed to water, but do not normally experience flow, after the issuance of the renewed license, but prior to the end of the current operating term and at reasonable intervals thereafter, based on engineering review of the results. • either replace sprinkler heads that have been in place for 50 years or submit representative samples to a recognized laboratory for field service testing in accordance with NFPA 25 recommendations. Perform subsequent replacement or field service testing of representative samples at 10-year intervals thereafter or until there are no sprinkler heads installed that will reach 50 years of service life during the period of extended operation. • perform hardness testing (or equivalent) of the sprinkler heads as part of their NFPA sampling, to determine whether loss of material due to selective leaching is occurring.	A.1.2.26	Enhancement prior to the period of extended operation. Then ongoing.	LRA Appendix B.2.26 January 19, 2010 Columbia Letter GO2-10-117 RAI B.2.26-1 August 19, 2010 Columbia Letter GO2-11-029 RAI B.2.26-6 January 28, 2011

Columbia License Renewal Commitments
Table A-1

Item Number Title	Commitment	Updated Final Safety Analysis Report (UFSAR) Supplement Section/LRA Section	Enhancement or Implementation Schedule	Source
	• perform ultrasonic testing of representative portions of above ground fire protection piping that is exposed to flowing water during periodic tests, and susceptible to a loss of material due to erosion (wall thinning). • perform visual inspection of a representative sample of copper alloy. >15% Zn fire protection components exposed to water for evidence of cracking (presence of ammonia) within the 10-year period prior to entering the period of extended operation (i.e., between year 30 and 40). • perform an additional visual inspection of a representative sample of copper alloy >15% Zn fire protection component exposed to water for evidence of cracking (presence of ammonia) within the 10-year period after entering the period of extended operation (i.e., between year 40 and 50). • address loss of material due to cavitation erosion with activities such as scheduled inspections of the fire protection piping locations that have had indications of cavitation erosion in the past.			
27 Flexible Connection Inspection Program	The Flexible Connection Inspection Program is described in NUREG-2123, section 3.0.3.2.10 (reference A.3-5). This program has been subsumed into the Inspection of Internal Surfaces of Miscellaneous Piping and Ducting Program (A.2.1.14)	A.2.1.14	A.2.1.27 has been subsumed into A.2.1.14	LDCN-21-041
28 Flow-Accelerated Corrosion (FAC) Program	The Flow-Accelerated Corrosion (FAC) Program is an existing program that will be continued for the period of extended operation, with the following enhancements: • add the containment nitrogen system components supplied with steam from the auxiliary steam system to the scope of the program. • Add gray cast iron as a material identified as susceptible to FAC.	A.1.2.28	Enhancement prior to the period of extended operation. Then ongoing.	LRA Appendix B.2.28 January 19, 2010
29 Fuel Oil Chemistry Program	The Fuel Oil Chemistry Program is an existing program that will be continued for the period of extended operation.	A.1.2.29	Ongoing	LRA Appendix B.2.29 January 19, 2010
30 Heat Exchangers Inspection	The Heat Exchangers Inspection is a new activity. The Heat Exchangers Inspection detects and characterizes the surface conditions with respect to fouling of heat exchangers and coolers that are in the scope of the inspection and exposed to treated water, closed cooling water, or indoor air. The inspection provides direct evidence as to whether, and to what extent, the relevant effects of aging have occurred.	A.1.2.30	Within the 10-year period prior to the period of extended operation	LRA Appendix B.2.30 January 19, 2010

Columbia License Renewal Commitments
Table A-1

Item Number Title	Commitment	Updated Final Safety Analysis Report (UFSAR) Supplement Section/LRA Section	Enhancement or Implementation Schedule	Source
31 High-Voltage Porcelain Insulators Aging Management Program	The High-Voltage Porcelain Insulators Aging Management Program is an existing program that will be continued for the period of extended operation, with the following enhancement: For the in-scope station post insulators located at the Ashe substation, add testing for contamination, and cleaning if required, every 8 years.	A.1.2.31	Enhancement prior to the period of extended operation. Then ongoing.	LRA Appendix B.2.31 January 19, 2010 Columbia Letter GO2-11-139 RAI B.2.31-1 August 18, 2011
32 Inaccessible Power Cables Not Subject to 10 CFR 50.49 EQ Requirements Program	The Inaccessible Power Cables Not Subject to 10 CFR 50.49 EQ Requirements Program is a new program. The Inaccessible Power Cables Not Subject to 10 CFR 50.49 EQ Requirements Program manages the aging of inaccessible medium- voltage and lower service voltage cables that are not environmentally qualified and are within the scope of license renewal. The program provides for testing to identify the conditions of the conductor insulation, and also provides for periodic inspection and drainage (if necessary) of electrical manholes. The frequency of the cable testing portion of the program will be once every 6 years, with the first test to be performed prior to the period of extended operation. The frequency of the manhole inspections will be at least annually, with the first inspections to be performed prior to the period of extended operation. The scope of the AMP will be enhanced to include inaccessible power cables (400V to 2kV), in response to industry and plant-specific operating experience.	A.1.2.32	Implementation prior to the period of extended operation. Then ongoing.	LRA Appendix B.2.32 January 19, 2010 Columbia Letter GO2-10-173 RAI B.2.32-4 December 7, 2010
33 Inservice Inspection (ISI) Program	The Inservice Inspection (ISI) Program is an existing program that will be continued for the period of extended operation.	A.1.2.33	Ongoing	LRA Appendix B.2.33 January 19, 2010
34 Inservice Inspection (ISI) Program – IWE	The Inservice Inspection (ISI) Program – IWE is an existing program that will be continued for the period of extended operation.	A.1.2.34	Ongoing	LRA Appendix B.2.34 January 19, 2010
35 Inservice Inspection (ISI) Program – IWF	The Inservice Inspection (ISI) Program - IWF is an existing program that will be continued for the period of extended operation.	A.1.2.35	Ongoing	LRA Appendix B.2.35 January 19, 2010

Columbia License Renewal Commitments
Table A-1

Item Number Title	Commitment	Updated Final Safety Analysis Report (UFSAR) Supplement Section/LRA Section	Enhancement or Implementation Schedule	Source
36 Lubricating Oil Analysis Program	The Lubricating Oil Analysis Program is an existing program that will be continued for the period of extended operation, with the following enhancements: • Include the following fire protection system components that are exposed to lubricating oil within the scope of the program: (1) fire protection diesel engine heat exchangers (lube oil coolers), (2) fire protection diesel engine lube oil piping, and (3) fire protection diesel engine lube oil pump casings.	A.1.2.36	Enhancement prior to the period of extended operation. Then ongoing.	LRA Appendix B.2.36 January 19, 2010
37 Lubricating Oil Inspection	The Lubricating Oil Inspection is a new activity. The Lubricating Oil Inspection detects and characterizes the condition of materials in systems and components for which the Lubricating Oil Analysis Program is credited with aging management. The inspection provides direct evidence as to whether, and to what extent, the relevant effects of aging have occurred.	A.1.2.37	Within the 10-year period prior to the period of extended operation.	LRA Appendix B.2.37 January 19, 2010
38 Masonry Wall Inspection	The Masonry Wall Inspection is an existing program that will be continued for the period of extended operation, with the following enhancements: • Specify that for each masonry wall, the extent of observed masonry cracking or degradation of steel edge supports and bracing are evaluated to ensure that the current evaluation basis is still valid. Corrective action is required if the extent of masonry cracking or steel degradation is sufficient to invalidate the evaluation basis. An option is to develop a new evaluation basis that accounts for the degraded condition of the wall (i.e., acceptance by further evaluation).	A.1.2.38	Enhancement prior to the period of extended operation. Then ongoing.	LRA Appendix B.2.38 January 19, 2010 Columbia Letter GO2-10-094 First Annual Update July 16, 2010
39 Material Handling System Inspection Program	The Material Handling System Inspection Program is an existing program that will be continued for the period of extended operation.	A.1.2.39	Ongoing	LRA Appendix B.2.39 January 19, 2010 Columbia Letter GO2-10-094 First Annual Update July 16, 2010
40 Metal- Enclosed Bus Program	The Metal-Enclosed Bus program is a new program that detects degradation of the metal enclosed bus in scope of license renewal. The program includes periodic inspection of the interior sections of the bus, and the elastomer seals at the joints of the duct sections. The program also conducts periodic connection resistance tests to ensure all welded flex connections are not experiencing any aging effects. These program aging management activities will be performed once every 10 years, with the first conducted prior to the period of extended operation.	A.1.2.40	Implementation prior to the period of extended operation. Then ongoing.	LRA Appendix B.2.40 January 19, 2010
41 Monitoring and Collection Systems Inspection Program	The Monitoring and Collection Systems Inspection Program is described in NUREG-2123, section 3.0.3.3.8 (reference A.3-5). This program has been subsumed into the Inspection of Internal Surfaces of Miscellaneous Piping and Ducting Program (A.2.1.14)	A.2.1.14	A.2.1.41 has been subsumed into A.2.1.14	LDCN-21-041

Columbia License Renewal Commitments
Table A-1

Item Number Title	Commitment	Updated Final Safety Analysis Report (UFSAR) Supplement Section/LRA Section	Enhancement or Implementation Schedule	Source
42 Open-Cycle Cooling Water Program	The Open-Cycle Cooling Water Program is an existing program that will be continued for the period of extended operation, with the following enhancements: • Address loss of material due to cavitation erosion (for the standby service water (SW), circulating water (CW), plant service water (TSW), and tower make-up (TMU) systems) with activities such as opportunistic inspections of portions of the systems that have had indications of cavitation erosion in the past. • Non-safety related components within the license renewal scope in the SW, CW, TSW, and TMU systems, and the non-safety related components served by or connected to the TSW system that are in the process sampling, process sampling radioactive, radwaste building mixed air, radwaste building return air, reactor building return air, and reactor closed cooling water systems, are included within the Inspection of Internal Surfaces of Miscellaneous Piping and Ducting Components Program.	A.1.2.42	Enhancement prior to the period of extended operation. Then ongoing.	LRA Appendix B.2.42 January 19, 2010
43 Potable Water Monitoring Program	The Potable Water Monitoring Program is described in NUREG-2123, section 3.0.3.3.9 (reference A.3-5). This program has been subsumed into the Inspection of Internal Surfaces of Miscellaneous Piping and Ducting Program (A.2.1.14).	A.2.1.14	A.2.1.43 has been subsumed into A.2.1.14	LDCN-21-041
44 Preventive Maintenance – RCIC Turbine Casing	The Preventive Maintenance – RCIC Turbine Casing is an existing program that will be continued for the period of extended operation.	A.1.2.44	Ongoing	LRA Appendix B.2.44 January 19, 2010
45 Reactor Head Closure Studs Program	The Reactor Head Closure Studs Program is an existing program that will be continued for the period of extended operation.	A.1.2.45	Ongoing	LRA Appendix B.2.45 January 19, 2010
46 Reactor Vessel Surveillance Program	The Reactor Vessel Surveillance Program is an existing program that will be continued for the period of extended operation.	A.1.2.46	Ongoing	LRA Appendix B.2.46 January 19, 2010
47 Selective Leaching Inspection	The Selective Leaching Inspection is a new activity. The Selective Leaching Inspection detects and characterizes the conditions on internal and external surfaces of subject components exposed to raw water, treated water, fuel oil, soil, and moist air (including condensation) environments. The inspection provides direct evidence through a combination of visual examination and hardness testing, or NRC- approved alternative, as to whether, and to what extent, the relevant effects of aging have occurred.	A.1.2.47	No earlier than 5 year prior to the period of extended operation.	LRA Appendix B.2.47 January 19, 2010 Columbia Letter GO2-11-074 Second Annual Update April 5, 2011

Columbia License Renewal Commitments
Table A-1

Item Number Title	Commitment	Updated Final Safety Analysis Report (UFSAR) Supplement Section/LRA Section	Enhancement or Implementation Schedule	Source
48 Service Air System Inspection Program	The Service Air System Inspection Program is described in NUIREG-2123, section 3.0.3.3.11 (reference A.3-5). This program has been subsumed into the Inspection of Internal Surfaces of Miscellaneous Piping and Ducting Program (A.2.1.14).	A.2.1.14	A.2.1.48 has been subsumed into A.2.1.14	LDCN-21-041
49 Small Bore Class 1 Piping Program	The Small Bore Piping Program will inspect a sample of ASME Code Class 1 piping LT NPS 4 to GE to NPS 1. The inspection will include 10% of the weld population or a maximum of 25 welds of each weld type (e.g., full penetration or socket weld) using a methodology to select the most susceptible and risk-significant welds. For socket welds, opportunistic destructive examination can be performed in lieu of volumetric examination. Because more information can be obtained from a destructive examination than from nondestructive examination, Columbia may take credit for each weld destructively examined equivalent to having volumetrically examined two welds.	A.1.2.49	Implemented prior to the period of extended operation.	LDCN-22-023

Columbia License Renewal Commitments
Table A-1

Item Number Title	Commitment	Updated Final Safety Analysis Report (UFSAR) Supplement Section/LRA Section	Enhancement or Implementation Schedule	Source
50 Structures Monitoring Program	The Structures Monitoring Program is an existing program that will be continued for the period of extended operation, with the following enhancements: • Include and list the structures within the scope of license renewal that credit the Structures Monitoring Program for aging management. • Specify that if a below grade structural wall or structural component becomes accessible through excavation; a follow-up action is initiated for the responsible engineer to inspect the exposed surfaces for age- related degradation prior to backfilling. • Identify that the term “structural component” for inspection includes component types that credit the Structures Monitoring Program for aging management. • Include the potential degradation mechanism checklist in the procedural documents. The checklist also requires enhancement to include aging effect terminology (e.g., loss of material, cracking, change in material properties, and loss of form). • Specify that the responsible engineer shall review site groundwater and raw water testing results for pH, chlorides, and sulfates prior to inspection to validate that the below-grade or raw water environments remain non-aggressive during the period of extended operation. Chemistry data shall be obtained from Columbia’s chemistry and environmental departments. Groundwater chemistry data shall be collected at least once every four years. The time of data collection shall be staggered from year to year (summer-winter-summer) to account for seasonal variations in the environment. • Specify additional direction for quantifying, monitoring, and trending of inspection results. • Provide better alignment with referenced Industry codes, standards, and guidelines regarding terminology and evaluation. • Revise to add sufficient acceptance criteria and critical parameters to trigger level of inspection and initiation of corrective action. ACI 349.3R-96 provides an acceptable basis for developing acceptance criteria for concrete structural elements, steel liners, joint, coatings, and waterproofing membranes. Plant specific quantitative degradation limits, similar to the three-tier hierarchy acceptance criteria from Chapter 5 of ACI 349.3R-96, will be developed, and added to the inspection procedure. • Conduct a base line inspection of the structures within the scope of license renewal plus a minimum of one additional inspection prior to entering the period of extended operation.	A.1.2.50	Enhancement prior to the period of extended operation. Then ongoing.	LRA Appendix B.2.50 January 19, 2010 Columbia Letter GO2-10-128 RAI B.2.50-2 September 3, 2010 Columbia Letter GO2-11-017 RAI B.2.50-1, RAI B.2.50-2, RAI B.2.50-3 January 20, 2011 Columbia Letter GO2-11-112 June 23, 2011
51 Supplemental Piping/Tank Inspection	The Supplemental Piping/Tank Inspection is described in NUREG-2123, section 3.0.3.1.29 (reference A.3-5). This program has been subsumed into the Inspection of Internal Surfaces of Miscellaneous Piping and Ducting Program (A.2.1.14).	A.2.1.14	A.2.1.51 has been subsumed into A.2.1.14	LDCN-21-041

Columbia License Renewal Commitments
Table A-1

Item Number Title	Commitment	Updated Final Safety Analysis Report (UFSAR) Supplement Section/LRA Section	Enhancement or Implementation Schedule	Source
52 Thermal Aging and Neutron Embrittlement of Cast Austenitic Stainless Steel (CASS) Program	The Thermal Aging and Neutron Embrittlement of Cast Austenitic Stainless Steel (CASS) is managed under the BWR Vessel Internals Program, see FSAR A.2.1.10.	A.1.2.52	Implementation prior to the period of extended operation. Then ongoing.	LRA Appendix B.2.52 January 19, 2010
53 Water Control Structures Inspection	The Water Control Structures Inspection is an existing program that will be continued for the period of extended operation, with the following enhancements: • Include and list the water control structures within the scope of license renewal. Include the RG 1.127 Revision 1 inspection elements for the water control structures, including submerged surfaces. Ensure descriptions of concrete conditions conform with the appendix to the American Concrete Institute (ACI) publication, ACI 201, "Guide for Making a Condition Survey of Concrete in Service." Add a recommendation to use photographs for comparison of previous and present conditions. Add a requirement for the documentation of new or progressive problems as a part of the inspection program. • Specify additional direction for quantifying, monitoring, and trending of inspection results. • Provide better alignment with referenced Industry codes, standards, and guidelines regarding terminology and evaluation. • Revise to add sufficient acceptance criteria and critical parameters to trigger level of inspection and initiation of corrective action. ACI 349.3R-96 provides an acceptable basis for developing acceptance criteria for concrete structural elements, steel liners, joints, coatings, and waterproofing membranes. Plant specific quantitative degradation limits, similar to the three-tier hierarchy acceptance criteria from Chapter 5 of ACI 349.3R-96, will be developed and added to the inspection procedure. • Energy Northwest will conduct a baseline inspection of the spray ponds (including submerged portions) plus a minimum of one additional inspection prior to entering the period of extended operation. Inspection will use quantitative acceptance criteria in accordance with ACI 349.3R.	A.1.2.53	Enhancement prior to the period of extended operation. Then ongoing.	LRA Appendix B.2.53 January 19, 2010 Columbia Letter GO2-10-128 RAI B.2.50-2 September 3, 2010 Columbia Letter GO2-11-014 RAI B.2.50-6 January 18, 2011

Columbia License Renewal Commitments
Table A-1

Item Number Title	Commitment	Updated Final Safety Analysis Report (UFSAR) Supplement Section/LRA Section	Enhancement or Implementation Schedule	Source
54 Pressure-Temperature Limits	The Columbia P-T limit curves were revised in 2005 to include the effects of power uprate to 3486 MWt. The P-T limits are valid for 33.1 EFPY through the end of the currently licensed period. P-T limits for the period of extended operation will be calculated using the most accurate fluence projections available at the time of the recalculation. The projections may be adjusted if there are changes in core design or if additional surveillance capsule results show the need for an adjustment. The projected ART for the period of extended operation gives confidence that future P-T curves will provide adequate operating margin. License amendment requests to revise the P-T limits will be submitted to the NRC for approval, when necessary to comply with 10 CFR 50 Appendix G, as part of the Reactor Vessel Surveillance Program.	A.1.3.1.4	Ongoing	LRA Appendix B.2.54 January 19, 2010
58 BWRVIP-42- A, AAI#5	In accordance with the BWR Vessel Internals Program, Columbia will implement the additional inspection requirements of BWRVIP-42-A once those requirements are approved by the NRC staff.	LRA Appendix C	Upon issuance of approved revision to BWRVIP-42 that recommends inspection of inaccessible welds	LRA Appendix C January 19, 2010
59 *BWRVIP -116*	*Energy Northwest will submit a licensing basis change request to implement the BWRVIP ISP(E) at least two years prior to the period of extended operation. Columbia will implement the ISP(E) as amended by the BWRVIP letter of January 11, 2005, including the new capsule test schedule in Table 1 of that letter.*	*LRA Appendix C*	*Two years prior to the period of extended operation.*	*LRA Appendix C* *January 19, 2010*
60 BWRVIP-116	Implementation of the BWRVIP ISP(E) for Columbia will include the following details in support of the contingency plan: 1. Energy Northwest will include the requirement to keep all tested material (irradiated or unirradiated) for possible future reconstitution and testing. 2. The Columbia site procedure, as modified, will continue to require any capsules removed from the reactor vessel to be stored in a manner that would support future re-insertion of these capsules in the reactor vessel. 3. Energy Northwest will notify the BWRVIP prior to any change in the storage of on-site materials. NRC approval will be obtained prior to any change in the storage of surveillance materials that would affect the potential use of the materials under the contingency plan.	LRA Appendix C	Ongoing	LRA Appendix C January 19, 2010
61 Boron Carbide Monitoring Program	The Boron Carbide Monitoring Program is an existing program that will be continued for the period of extended operation. Initial in situ testing of the spent fuel rack neutron absorbing material will be performed prior to the period of extended operation to determine the current state of the racks. Additional in situ testing will be based on the results of this initial testing, but at an interval not to exceed ten years.	A.1.2.54	Initial in situ testing prior to the period of extended operation, then ongoing.	Columbia Letter GO2-10-117 RAI 3.3.2.2.6-1 August 19, 2010 Columbia Letter GO2-11-011 RAI B.2.54-1 January 14, 2011

Columbia License Renewal Commitments
Table A-1

Item Number Title	Commitment	Updated Final Safety Analysis Report (UFSAR) Supplement Section/LRA Section	Enhancement or Implementation Schedule	Source
62 Service Level 1 Protective Coatings Program	The Service Level 1 Protective Coatings Program is an existing program that will be continued for the period of extended operation.	A.1.2.55	Ongoing	Columbia Letter GO2-10-180 RAI XI.S8-1 December 21, 2010
63 Inservice Inspection (ISI) Program	Columbia currently relies on acceptable enhanced visual technique (EVT-1) inspections in accordance with ASME Code Section XI. Ultrasonic Testing (UT) examination of creviced shroud support plate access hole cover weld, top hat configuration, will be performed, in addition to EVT-1, once a demonstrated acceptable UT technique becomes available.	A.1.2.33	Upon availability of acceptable UT technique. Then ongoing.	Columbia Letter GO2-10-179 RAI 3.1.1.x-1 December 21, 2010
64 Inservice Inspection (ISI) Program – IWE	Verify leakage is not entering the annular space between the containment vessel and the concrete shield wall from the outer refueling bellows seal. Inspection of the portions of the outer containment vessel shell made accessible by opening four of the eight inspection ports in the containment vessel at 570 foot elevation will be performed to check for evidence of leakage. These inspections will be performed during a refueling outage while the reactor cavity is flooded.	A.1.2.34	During the fourth ISI interval and prior to the period of extended operation (PEO), perform inspections via four inspection ports. If no indications are reported, then no further examinations are required.	Columbia Letter GO2-11-014 RAI 3.5.2.2.1.4-1 January 18, 2011 Columbia Letter GO2-11-112 June 23, 2011
65 *Inservice Inspection (ISI) Program*	*The third 10-year ISI interval was approved by the NRC for extension to January 31, 2016. The fourth 10-year interval ISI Program Plan was issued on January 27, 2016 and was submitted to the NRC on May 8, 2017. The Small Bore Piping Program will be included in the fourth 10-year interval ISI Program Plan as an augmented inspection. The locations to be inspected, the sample size, the inspection methodology will be included in the program plan.*	*A.1.2.33*	*Upon submittal of the ISI Program Plan for the fourth 10-year interval.*	*Columbia Letter GO2-11-020* *RAI B.2.49-2* *January 27, 2011* *Columbia Letter GO2-11-074* *Second Annual Update* *April 5, 2011*
66 *Structure Monitoring Program*	*Perform a one-time internal inspection of the spent fuel pool telltale drain lines prior to the period of extended operation to confirm the drain lines are free of obstructions. Unexpected inspection results of clogged lines will require a condition report be documented and further engineering evaluation of adverse impacts to the spent fuel pool structure and to identify the periodicity of drain cleaning and maintenance process.*	*A.1.2.50*	*Prior to the period of extended operation*	*Columbia Letter GO2-11-017* *RAI B.2.50-5* *January 20, 2011*

Columbia License Renewal Commitments
Table A-1

Item Number Title	Commitment	Updated Final Safety Analysis Report (UFSAR) Supplement Section/LRA Section	Enhancement or Implementation Schedule	Source
67 *Structure Monitoring Program*	*Perform a one-time borescope inspection of the containment sand pocket drain lines to confirm the absence of clogged drain lines and that a flow path exists for identification of any potential leakage into the sand pocket region. Unexpected inspection results (clogged drain lines) will be documented under corrective action process.*	*A.1.2.50*	*Prior to 12/31/15*	*Columbia Letter GO2-11-017 RAI B.2.34-1 January 20, 2011* *Columbia Letter GO2-11-029 RAI B.2.26-6 January 28, 2011*
68 *Flow-Accelerated Corrosion (FAC) Program*	*Ensure that the condensate (COND) and reactor feedwater (RFW) systems are screened and evaluated for cavitation prior to entering the period of extended operation (PEO). If the in-scope portion of either system is determined to be susceptible to loss of material due to cavitation erosion, then a program(s) will be modified or created to manage the loss of material.*	*A.1.2.28*	*Prior to the period of extended operation.*	*Columbia Letter GO2-11-029 RAI B.2.26-6 January 28, 2011* *Columbia Letter GO2-11-074 Second Annual Update 4/5/11*
69 *Inservice Inspection (ISI) Program*	*Re-evaluate the portions of the reactor pressure vessel beltline welds BG and BM for the period of extended operation (54 EFPY), in accordance with the requirements of the ASME Code, Section XI, IWB-3600 based on the results of 2015 inservice inspection.*	*A.1.2.33*	*Prior to the period of extended operation.*	*Columbia Letter GO2-11-031 RAI 4.7.1-1 January 28, 2011* *Columbia Letter GO2-11-074 Second Annual Update April 5, 2011*
70 *TLAA – Embrittlement of reactor vessel*	*Perform a 54 EFPY equivalent margin analysis for the embrittlement (upper shelf energy) of the reactor vessel N12 (preinstrumentation) nozzle forgings.*	*A.1.3.1.2*	*No later than 2 years prior to the period of extended operation.*	*Columbia Letter GO2-11-031 RAI 4.2-1 January 28, 2011* *Columbia Letter GO2-11-084 RAI 4.2-6 April 22, 2011* *Columbia Letter GO2-11-195 RAI 4.2-6 December 14, 2011*

Note: 1. Commitments 55, 56 and 57 have been completed and were removed from this table.

2. Commitment 71 is reflected in License Condition 2.C.(36) and was removed from this table.

Appendix B

RESPONSE TO REGULATORY ISSUES RESULTING FROM TMI-2

TABLE OF CONTENTS

Section Page

I.A.1.2 Shift Supervisor Responsibilities B.1-1
I.C.1 GUIDANCE FOR THE EVALUATION AND DEVELOPMENT OF PROCEDURES FOR TRANSIENTS AND ACCIDENTS B.1-5
I.C.2 SHIFT AND RELIEF TURNOVER PROCEDURES B.1-8
I.C.4 CONTROL ROOM ACCESS B.1-10
I.C.6 GUIDANCE ON PROCEDURES FOR VERIFYING CORRECT PERFORMANCE OF OPERATING ACTIVITIES B.1-11
I.C.7 NSSS VENDOR REVIEW OF PROCEDURES B.1-14
I.C.8 PILOT MONITORING OF SELECTED EMERGENCY PROCEDURES FOR NEAR-TERM OPERATING LICENSE APPLICANTS B.1-14
I.D.1 CONTROL ROOM DESIGN REVIEWS B.1-15
I.G.1 PREOPERATIONAL AND LOW-POWER TESTING B.1-18
II.B.1 REACTOR COOLANT SYSTEM VENTS B.2-1
II.B.3 POSTACCIDENT SAMPLING CAPABILITY B.2-9
II.F.1.3 Containment High-Range Radiation Monitor B.2-16
II.F.1.4 Containment Pressure Monitor B.2-21
II.F.1.5 Containment Water Level Monitor Position B.2-22
II.F.1.6 Containment Hydrogen Monitor B.2-23
II.F.2 INSTRUMENTATION FOR DETECTION OF INADEQUATE CORE COOLING B.2-24
II.K.1.5 Assurance of Proper Engineered Safety Feature Functioning B.2-25
II.K.1.22 Proper Functioning of Heat Removal Systems B.2-26
II.K.1.23 Reactor Vessel Level Instrumentation B.2-30
II.K.3.21 Restart of Core Spray and Low Pressure Coolant Injection Systems B.2-32
II.K.3.25 Effect of Loss of Alternating-Current Power on Pump Seals B.2-33
II.K.3.44 Adequate Core Cooling for Transients with a Single Failure B.2-34
II.K.3.45 Evaluation of Depressurization with Other than Automatic Depressurization System B.2-43
II.K.3.46 Response to List of Concerns from ACRS Consultant (Michelson Concerns) B.2-53
III.D.1.1 Primary Coolant Sources Outside Containment B.3-1
III.D.3.3 Improved Inplant Iodine Instrumentation Under Accident Conditions B.3-3

Appendix B

RESPONSE TO REGULATORY ISSUES RESULTING FROM TMI-2

LIST OF TABLES

Number	Title	Page
I.A.1.2-1	Shift Supervisor Responsibilities (2.2.1.A)	B.1-3
II.F.1-3	Containment High-Range Radiation Monitor	B.2-19
II.K.3.44-1	*Summary of Initiating Transients*	*B.2-39*
II.K.3.44-2	*List of Single Failures Which Can Potentially Degrade the Course of a BWR Transient*	*B.2-40*
II.K.3.44-3	*Worst Case of Transient with a Single Failure for Different BWR Product Lines*	*B.2-41*
II.K.3.44-4	*Participating Utilities - NUREG-0737*	*B.2-42*
II.K.3.45-1	*Results for BWR/6 Outside Steam Line Break No High Pressure Systems Available*	*B.2-47*
II.K.3.45-2	*Results for BWR/6 Stuck-Open Relief Valve No High Pressure Systems Available*	*B.2-48*
II.K.3.45-3	*Results for BWR/3 Outside Steam Line Break No High Pressure Systems Available*	*B.2-49*
II.K.3.45-4	*Results for BWR/3 Outside Steam Line Break on Appendix K Assumptions with No High Pressure Systems*	*B.2-50*
II.K.3.45-5	*Participating Utilities - NUREG-0737*	*B.2-51*

Appendix B

RESPONSE TO REGULATORY ISSUES RESULTING FROM TMI-2

LIST OF FIGURES

Number	Title
II.K.3.45-1	Vessel Blowdown Rates Used in Analysis

I.A.1.2 Shift Supervisor Responsibilities

Position (NUREG-0578, 2.2.1.A)

a. The highest level of corporate management of each licensee shall issue and periodically reissue a management directive that emphasizes the primary management responsibility of the shift supervisor for safe operation of the plant under all conditions on his shift and that clearly establishes his command duties.

b. Plant procedures shall be reviewed to ensure that the duties, responsibilities, and authority of the shift supervisor and control room operators are properly defined to effect the establishment of a definite line of command and clear delineation of the command decision authority of the shift supervisor in the control room relative to other plant management personnel. Particular emphasis shall be placed on the following:

   1. The responsibility and authority of the shift supervisor shall be to maintain the broadest perspective of operational conditions affecting the safety of the plant as a matter of highest priority at all times when on duty in the control room. The idea shall be reinforced that the shift supervisor should not become totally involved in any single operation in times of emergency when multiple operations are required in the control room.

   2. The shift supervisor, until properly relieved, shall remain in the control room at all times during accident situations to direct the activities of control room operators. Persons authorized to relieve the shift supervisor shall be specified.

   3. If the shift supervisor is temporarily absent from the control room during routine operations, a lead control room operator shall be designated to assume the control room command function. These temporary duties, responsibilities, and authority shall be clearly specified.

c. Training programs for shift supervisors shall emphasize and reinforce the responsibility for safe operation and the management function of the shift supervisor is to provide for ensuring safety.

d. The administrative duties of the shift supervisor shall be reviewed by the senior officer of each utility responsible for plant operations. Administrative functions that detract from or are subordinate to the management responsibility for

ensuring the safe operation of the plant shall be delegated to other operations personnel not on duty in the control room.

Clarification

The table attached provides clarification to the above position.

Columbia Generating Station Position

The administrative duties of the shift manager have been reviewed; inappropriate functions were delegated to other personnel including the shift support supervisor. The shift support supervisor will assist the shift manager by directing personnel assigned to perform balance-of-plant operating functions and by performing shift administrative duties.

Procedures have been reviewed to ensure that the shift manager, control room supervisor, shift support supervisor, and operator functions are defined adequately to establish the shift manager as the commanding authority for plant operations relative to other plant management. The shift manager is to ensure the safe operation of the plant under all conditions. During an emergency, the responsibility for directing and controlling the actions of the operating crew to place and maintain the plant in a safe condition rests with the shift manager. During accident conditions, the shift manager will normally be in the control room at all times until properly relieved. He may elect to direct recovery activities at the scene of the accident.

This principle has been reinforced by management directive that emphasizes that the shift manager's primary responsibility is the safe operation of the plant under all conditions.

The shift manager's administrative duties will be reviewed annually by the crew operations manager to ensure that administrative responsibilities do not interfere with the primary responsibility.

Appropriate documentation will be available onsite for review by the Nuclear Regulatory Commission (NRC) I&E Branch.

This position has been accepted in the NRC Staff Safety Evaluation Report NUREG-0892 dated March 1982, section 13.5.1.8.

Table I.A.1.2-1

Shift Supervisor Responsibilities (2.2.1.A)

NUREG-0578 Position (Position Number)	Clarification
Highest Level of Corporate Management (1.)	Chief Nuclear Officer
Periodically Reissue (1.)	Annual Reinforcement of Company Policy
Management Direction (1.)	Formal Documentation of Shift Personnel, All Plant Management, Copy to IE Region
Properly Defined (2.0)	Defined in Writing in a Plant Procedure
Until Properly Relieved (2.B)	Formal Transfer of Authority, Valid SRO License, Recorded in Plant Log
Temporarily Absent (2.C)	Any Absence
Control Room Defined (2.C)	Includes Shift Manager Office Adjacent to the Control Room
Designated (2.C)	In Administrative Procedures
Clearly Specified	Defined in Administrative Procedures
SRO Training	Specified in ANS 3.1 (Draft) Section 5.2.1.8
Administrative Duties (4.)	Not Affecting Plant Safety
Administrative Duties Reviewed (4.)	On Same Interval as Reinforcement: i.e., Annual by Chief Nuclear Officer

This requirement was met before fuel loading. See NUREG-0578, Section 22.1a, Item 4 and NRC letters of September 27 and November 9, 1979

The italicized information is historical and was provided to support the application for an operating license.

I.C.1 GUIDANCE FOR THE EVALUATION AND DEVELOPMENT OF PROCEDURES FOR TRANSIENTS AND ACCIDENTS

Position (NUREG-0737)

In the letters of September 13 and 27, October 10 and 30, and November 9, 1979, the Office of Nuclear Reactor Regulation required licensees of operating plants, applicants for operating licenses and licensees of plants under construction to perform analyses of transients and accidents, prepare emergency procedure guidelines, upgrade emergency procedures, including procedures for operating with natural circulation conditions, and to conduct operator retraining (see also Item I.A.2.1). Emergency procedures are required to be consistent with the actions necessary to cope with the transients and accidents analyzed. Analyses of transients and accidents were to be completed in early 1980 and implementation of procedures and retraining were to be completed 3 months after emergency procedure guidelines were established; however, some difficulty in completing these requirements has been experienced. Clarification of the scope of the task and appropriate schedule revisions are being developed. In the course of review of these matters on Babcock and Wilcox (B&W) designed plants, the staff will follow up on the bulletin and orders matters relating to analysis methods and results, as listed in NUREG-0660, Appendix C (see Table C.1, Items 3, 4, 16, 18, 24, 25, 26, 27; Table C.2, Items 4, 12, 17, 18, 19, 20; and Table C.3, Items 6, 35, 37, 38, 39, 41, 47, 55, 57).

Changes to Previous Requirements and Guidance:

a. Modification to Clarification

1. Addresses owners' group and vendor submittals.

2. References to task action plan Items I.C.8 and I.C.9.

3. Scope of procedures review is explained.

4. Establishes configuration control of guidelines for emergency procedures.

b. Modification to Implementation

1. Deleted reference to NUREG-0578, Recommendation 2.1.9 for Item I.C.1(a)2, inadequate core cooling.

The complete NRC position description and clarification is contained in NUREG-0737 - Task I.C.1.

This requirement is to be completed by fuel load.

Clarification

None.

Columbia Generating Station Position

Columbia Generating Station (CGS) has participated, and continues to participate, in the BWR Owner's Group program to develop Emergency Procedure Guidelines for General Electric Boiling Water Reactor. Following are a brief description of the submittals to date, and a justification of their adequacy to support guidelines development.

a. Description of Submittals

1. NEDO-24708, "Additional Information Required for NRC Staff Generic Report on Boiling Water Reactors," August 1979; including additional sections submitted in prepublication form since August 1979.

(a) Section 3.1.1 (Small Break LOCA).

Description and analysis of small break loss-of-coolant events, considering a range of break sizes, location, and conditions, including equipment failures and operator errors; description and justification of analysis methods.

(b) Section 3.2.1 (Loss of Feedwater) - revised and resubmitted in prepublication from March 31, 1980.

Description and analysis of loss of feedwater events, including cases involving stuck-open relief valves, and including equipment failures and operator errors; description and justification of analysis methods.

(c) Section 3.2.2 (Other Operational Transients) - submitted in prepublication form March 31, 1980; revised and resubmitted in prepublication form August 22, 1980.

Description and analysis of each FSAR Chapter 15 event resulting in a reactor system transient; demonstration of applicability of

analyses of 3.1.1, 3.2.1, and 3.5.2.1 to each event; demonstration of applicability of Emergency Procedure Guidelines to each event.

(d) Section 3.3 (BWR Natural and Forced Circulation).

Description of natural and forced circulation cooling; factors influencing natural circulation, including noncondensables; re-establishment of forced circulation under transient and accident conditions.

(e) Section 3.5.2.1 (Analyses to Demonstrate Adequate Core Cooling) - submitted in prepublication form November 30, 1979; revised and resubmitted in prepublication form September 16, 1980.

Description and analysis of loss-of-coolant events, loss of feedwater events, and stuck-open relief valves events, including severe multiple equipment failures and operator errors which, if not mitigated, could result in conditions of inadequate core cooling.

(f) Section 3.5.2.3 (Diverse Methods of Detecting Adequate Core Cooling) - submitted in prepublication form December 28, 1979.

Description of indications available to the BWR operator for the detection of adequate core cooling (detailed instrument responses are described in 3.1.1, 3.2.1, and 3.5.2.1).

(g) Section 3.5.2.4 (Justification of Analysis Methods) - submitted in pre-publication form September 16, 1980.

Description and justification of analysis methods for extremely degraded cases treated in 3.5.2.1.

2. BWR Emergency Procedure Guidelines (Revision 3).

Guidelines for BWR Emergency Procedures based on identification and response to plant symptoms; including a range of equipment failures and operator errors; including severe multiple equipment failures and operator errors which, if not mitigated, would result in conditions of inadequate core cooling; including conditions when core cooling status is uncertain or unknown.

3. NEDO-24708A, Revision 1, December 1980.

b. Adequacy of Submittals:

The submittals described in (a) above have been discussed and reviewed extensively among the BWR Owner's Group, the General Electric Company, and the NRC staff. The NRC staff has found (NUREG-0737 p. I.C.1-3) that "the analysis and guidelines submitted by General Electric Company (GE) Owners' Group…comply with the requirements (of the NUREG-0737 clarification)." In Reference 1, the Director of the Division of Licensing states, "we find the Emergency Procedure Guidelines acceptable for trial implementation (on six LRG-1 plants with applications for operating licenses pending)."

CGS believes that in view of these findings, no further detailed justification of the analysis or guidelines is necessary at this time.

Reference 1 further states, "(during the course of implementation we may identify areas that require modification or further analysis and justification." The enclosure of Reference 1 identifies several such areas. CGS will work with the BWR Owners' Group in responding to such requests.

By our commitment to work with the Owners' Group on such requests, on schedules mutually agreed to by the NRC and the Owners' Group, and by reference to the BWR Owners' Group analyses and guidelines already submitted, our response to the NUREG-0737 requirement "for reanalysis of transients and accidents and inadequate core cooling and preparation of guidelines for development of emergency procedures" is complete.

This position has been accepted in the NRC Safety Evaluation Report NUREG-0892, Supplement 5 dated April 1984, section 13.5.2.2.

References

1. Letter, D. G. Eisenhut (NRC) to S. T. Rogers (BWR Owners' Group), regarding Emergency Procedure Guidelines, October 21, 1980.

I.C.2 SHIFT AND RELIEF TURNOVER PROCEDURES

Position

The licensees shall review and revise as necessary the plant procedure for shift and relief turnover to ensure the following:

a. A checklist shall be provided for the oncoming and offgoing control room operators and the oncoming shift supervisors to complete and sign. The following items, as a minimum, shall be included in the checklist.

1. Assurance that critical plant parameters are within allowable limits (parameters and allowable limits shall be listed on the checklist).

2. Assurance of the availability and proper alignment of all systems essential to the prevention and mitigation of operational transients and accidents by a check of the control console (what to check and criteria for acceptable status shall be included in the checklist).

3. Identification of systems and components that are in a degraded mode of operation permitted by the Technical Specifications. For such systems and components, the length of time in the degraded mode shall be compared with the Technical Specifications action statement (this shall be recorded as a separate entry on the checklist).

b. Checklists or logs shall be provided for completion by the offgoing and ongoing auxiliary operators and technicians. Such checklists or logs shall include any equipment under maintenance or test that by themselves could degrade a system critical to the prevention and mitigation of operational transients and accidents or initiate an operational transient (what to check and criteria for acceptable status shall be included on the checklist).

c. A system shall be established to evaluate the effectiveness of the shift and relief turnover procedure (for example, periodic independent verification of system alignments).

Clarification

None.

Columbia Generating Station Position

The control room operator's checklist is designed to do the following:

a. Ensure that critical plant parameters are monitored and are within allowable limits,

b. Ensure the availability and correct alignment of essential systems, and

c. Identify all systems or components which are in a degraded mode of operation and compare each length of time in the degraded mode to Technical Specifications action requirements.

The off-going and on-coming shift manager, control room supervisor, and on-coming control room operator positions will signify checklist status and content.

A checklist designed for balance-of-plant shift turnover will identify any equipment under maintenance or test which could either (a) by itself degrade a system which is critical to the prevention and mitigation of operational transients and accidents or (b) initiate an operational transient.

The off-going or on-coming shift support supervisors and the on-coming equipment operators with rounds will signify checklist status and content for the balance-of-plant checklists.

CGS established a system to evaluate the effectiveness of the shift and relief turnover procedure.

This italicized text is historical and was provided to support the application for an operating license.

With CGS receiving an operating license December 19, 1983, and going through test and startup phases prior to that date the shift and relief turnover procedures have been under continuous scrutiny for over 2 years. This has resulted in changes reviewed and accepted by the Plant Operations Committee to increase the efficiency and effectiveness of the procedures.

I.C.4 CONTROL ROOM ACCESS

Position (NUREG-0578 2.2.2.A)

The licensee shall make provisions for limiting access to the control room to those individuals responsible for the direct operation of the nuclear power plant (e.g., operations supervisor, shift supervisor, and control room operators), to technical advisors who may be requested or required to support the operation, and to predesignated NRC personnel. Provisions shall include the following:

a. Develop and implement an administrative procedure that establishes the authority and responsibility of the person in charge of the control room to limit access, and

b. Develop and implement procedures that establish a clear line of authority and responsibility in the control room in the event of an emergency. The line of succession for the person in charge of the control room shall be established and

limited to persons possessing a current senior reactor operator's license. The plan shall clearly define the lines of communication and authority for plant management personnel not in direct command of operations, including those who report to stations outside of the control room.

Clarification

None.

Columbia Generating Station Position

A Columbia Generating Station procedure has been implemented to establish the shift manager (SRO) and, in his absence, the control room supervisor (SRO) as the authority and responsibility for limiting access to the control room. Nonessential personnel are excluded from the control room when their presence is hampering operations. Nonessential personnel are defined as those not required by the shift manager to assist in safe plant operation and may include anyone not normally assigned a shift control room position. If required, plant security can be used to enforce the policy.

This position has been accepted in the NRC Safety Evaluation Report NUREG-0892, dated December 1982, section 13.5.1.8.

Additionally, procedures establish the same line of succession for control room authority and responsibility in the event of an emergency. The procedures specifically address lines of communication and authority for management personnel not in direct command of operations and assigned responsibilities outside the control room. Instructions or orders impacting operations are reviewed by the operations director and transmitted to the shift manager.

I.C.6 GUIDANCE ON PROCEDURES FOR VERIFYING CORRECT PERFORMANCE OF OPERATING ACTIVITIES

Position

It is required (from NUREG-0660) that licensees' procedures be reviewed and revised, as necessary, to ensure that an effective system of verifying the correct performance of operating activities is provided as a means of reducing human errors and improving the quality of normal operations. This will reduce the frequency of occurrence of situations that could result in or contribute to accidents. Such a verification system may include automatic system status monitoring, human verification of operations and maintenance activities independent of the people performing the activity (see NUREG-0585, Recommendation 5), or both.

Implementation of automatic status monitoring if required will reduce the extent of human verification of operations and maintenance activities but will not eliminate the need for such

verification in all instances. The procedures adopted by the licensees may consist of two phases - one before and one after installation of automatic status monitoring equipment, if required, in accordance with Item I.D.3.

Clarification

Item I.C.6 of the NRC Task Action Plan (NUREG-0660) and Recommendation 5 of NUREG-0585 propose requiring that licensees' procedures be reviewed and revised, as necessary, to ensure that an effective system of verifying the correct performance of operating activities is provided. An acceptable program for verification of operating activities is described below.

The American Nuclear Society has prepared a draft revision to ANSI Standard N18.7-1972 (ANS 3.2), "Administrative Controls and Quality Assurance for the Operational Phase of Nuclear Power Plants." A second proposed revision to Regulatory Guide 1.33, "Quality Assurance Program Requirements (Operation)," which is to be issued for public comment in the near future, will endorse the latest draft revision to ANS 3.2 subject to the following supplemental provisions:

a. Applicability of the guidance of Section 5.2.6 should be extended to cover surveillance testing in addition to maintenance.

b. In lieu of any designated senior reactor operator (SRO), the authority to release systems and equipment for maintenance or surveillance testing or return-to-service may be delegated to an onshift SRO, provided provisions are made to ensure that the shift supervisor is kept fully informed of system status.

c. Work permits involving tagging for maintenance or surveillance testing are verified by the shift manager (or his designee) for correct implementation of control measures. Independent verification by qualified individuals is made for installation or removal of temporary modifications such as jumpers, lifted leads or bypass lines. Routine independent verification of equipment status at the location of the equipment will be performed for return-to-service activities of all important safety-related equipment having no control room status indications. These verifications will be by qualified equipment operators.

d. Equipment control procedures should include assurance that control room operators are informed of changes in equipment status and the effects of such changes.

e. For the return-to-service of equipment important to safety, a second qualified operator should verify proper systems alignment unless functional testing can be

performed without compromising plant safety, and all equipment, valves, and switches involved in the activity are correctly aligned.

NOTE: A licensed operator possessing knowledge of the systems involved and the relationship of the systems to plant safety would be a "qualified" person. The staff is investigating the level of qualification necessary for other operators to perform these functions.

For plants that have or will have automatic system status monitoring as discussed in Task Action Plan Item I.D.3, NUREG-0660, the extent of human verification of operations and maintenance activities will be reduced. However, the need for such verification will not be eliminated in all instances.

Columbia Generating Station Position

Procedures implement an effective system for verification of operating activities important to safety. These procedures were implemented prior to fuel load. The preparation of these procedures was guided by ANS 3.2 Section 5.2.6 and the following supplemental provisions.

a. ANS 3.2 Section 5.2.6 will be applied to both maintenance and technical specification surveillances as described below.

b. The shift manager has the designated responsibility for implementing procedures for release of systems and equipment for maintenance or surveillance testing and for return-to-service. This responsibility may be delegated to a licensed SRO. The shift manager will remain informed by reviewing records and receiving turnover.

c. Clearance tagging for maintenance or surveillance testing are independently verified by the shift manager (or his designee) for correct implementation of control measures. Independent verification is also made for installation or removal of temporary modifications such as jumpers, lifted leads, or bypass lines on safety-related or fire protection systems not controlled by approved procedures. Routine independent verification of equipment status at the location of the equipment will be performed for return-to-service activities of all safety-related and fire protection equipment having no control room status indications.

d. Equipment control procedures are implemented through the control room such that control room personnel are aware of changes being made in equipment status and the effects of such changes.

e. Routine independent verification of status at the location of safety-related or fire protection equipment is limited to return-to-service activities performed prior to startups following refueling or long-term outages in accordance with the ALARA concept to limit accumulation of personnel radiation exposures. In addition to the above, independent verification of the return-to-service position of safety-related locked valves will be made whenever their status is changed.

This position has been accepted in the NRC Safety Evaluation Report NUREG-0892, dated March 1982, section 13.5.1.8.

I.C.7 NSSS VENDOR REVIEW OF PROCEDURES

Position

Obtain nuclear steam supply system (NSSS) vendor review of low power testing procedures to further verify their adequacy.

This requirement must be met before fuel loading (NUREG-0694).

Clarification

None.

Columbia Generating Station Position

The NSSS vendor (General Electric Company) has reviewed and documented the low power testing procedures, power ascension test procedures, and emergency procedures. This review considered the BWR Emergency Procedure guidelines submitted to the NRC on behalf of BWR Owners' Group on June 30, 1980, by letter from R. H. Buchholz to D. G. Eisenhut.

This position has been accepted in the NRC Safety Evaluation Report NUREG-0892, dated March 1982, section 13.5.2.3 and confirmed in I&E Inspection 84-04.

I.C.8 PILOT MONITORING OF SELECTED EMERGENCY PROCEDURES FOR NEAR-TERM OPERATING LICENSE APPLICANTS

Position

Correct emergency procedures, as necessary, based on NRC audit of selected plant emergency operating procedures (e.g., small-break LOCA, loss of feedwater, restart of engineered safety features following a loss of ac power, stream line break, or steam-generated tube rupture).

This action will be completed prior to issuance of a full-power license (NUREG-0694).

Clarification

None.

Columbia Generating Station Position

CGS has developed procedures based on the BWR Owners' Group Emergency Procedure Guidelines. These procedures are further addressed in response to I.C.1, Short-Term Accident Analysis and Procedure Revision.

This position has been accepted in the NRC Safety Evaluation Report NUREG-0892, dated December 1982, section 13.5.2.3.

I.D.1 CONTROL ROOM DESIGN REVIEWS

Position

In accordance with Task Action Plan I.D.1, Control Room Design Reviews (NUREG-0660), all licensees and applicants for operating licenses will be required to conduct a detailed control room design review to identify and correct design deficiencies. This detailed control room design review is expected to take about a year. Therefore, the Office of Nuclear Reactor Regulation (NRR) requires that those applicants for operating licenses who are unable to complete this review prior to issuance of a license make preliminary assessments of their control rooms to identify significant human factors and instrumentation problems and establish a schedule approved by NRC for correcting deficiencies. These applicants will be required to complete the more detailed control room reviews on the same schedule as licensees with operating plants (NUREG-0737).

Clarification

NRR is presently developing human engineering guidelines to assist each licensee and applicant in performing detailed control room review. A draft of the guidelines has been published for public comment as NUREG/CR-1580, "Human Engineering Guide to Control Room Evaluation." The due date for comments on this draft document was September 29, 1980. NRR will issue the final version of the guidelines as NUREG-0700, by February 1981, after receiving, reviewing, and incorporating substantive public comments from operating reactor licensees, applicants for operating licenses, human factors engineering experts, and other interested parties. NRR will issue evaluation criteria, by July 1981, which will be used to judge the acceptability of the detailed reviews performed and the design modification implemented.

Applicants for operating licenses who will be unable to complete the detailed control room design review prior to issuance of a license are required to perform a preliminary control room design assessment to identify significant human factors problems. Applicants will find it of value to refer to the draft document NUREG/CR-1580, "Human Engineering Guide to Control Room Evaluation," in performing the preliminary assessment. NRR will evaluate the applicants' preliminary assessments including the performance by NRR of onsite review/audit. The NRR onsite review/audit will be on a schedule consistent with licensing needs and will emphasize the following aspects of the control room:

a. The adequacy of information presented to the operator to reflect plant status for normal operation, anticipated operational occurrences, and accident conditions,

b. The groupings of displays and the layout of panels,

c. Improvements in the safety monitoring and human factors enhancement of controls and control displays,

d. The communications from the control room to points outside the control room, such as the onsite technical support center, remote shutdown panel, offsite telephone lines, and to other areas within the plant for normal and emergency operation,

e. The use of direct rather than derived signals for the presentation of process and safety information to the operator,

f. The operability of the plant from the control room with multiple failures of nonsafety-grade and nonseismic systems,

g. The adequacy of operating procedures and operator training with respect to limitations of instrumentation displays in the control room,

h. The categorization of alarms, with unique definition of safety alarms, and

i. The physical location of the shift supervisor's office either adjacent to or within the control room complex.

Prior to the onsite review/audit, NRR will require a copy of the applicant's preliminary assessment and additional information which will be used in formulating the details of the onsite review/audit.

Columbia Generating Station Position

CGS has undertaken an aggressive program to complete a control room review program in accordance with this task.

The schedule and activities for the review of the CGS Control Room and submittal of an assessment report to the NRR are as follows:

a. *A preliminary assessment of CGS's Control Room based on the BWR Owners' Subgroup review program draft criteria and NRC draft document NUREG/CR-158 was submitted to NRR in January 1982.*

b. *A Detailed Control Room Design Review (DCRDR) Preliminary Report based on a review of the CGS Control Room by the BWR Owners' Group and CGS in-house Human Factors Task Force against the BWR Owners' Group Control Room Design Review Program Plan and NUREG-0700 was submitted to NRR in April 1983.*

c. *Based on NRR reviews of the preliminary DCRDR report and onsite audit, a Response to NRC Human Factors Engineering Preliminary Design Assessment Audit Report was submitted to NRR in October 1983.*

d. *A CGS Control Room Design Review Program Plan documenting the CGS methodology and resources used, in accordance with NUREG-0700, was submitted in February 1984.*

e. *A DCRDR Final Report, per the CGS operating license was submitted to NRR on November 1, 1985, Letter GO2-85-758.*

The schedule and activities for the implementation of corrections for the CGS Control Room are as follows:

a. *All major hardware and procedural findings noted during the preliminary DCRDR report were completed prior to fuel load.*

b. *All residual findings and findings noted in the DCRDR final report are scheduled to be completed during the first refueling outage.*

The NRC Safety Evaluation Report (SER) for the CGS DCRDR was issued as Reference 1. Energy Northwest responded to the SER in Reference 2. By Reference 3 Energy Northwest stated that all DCRDR items had been implemented. In Reference 4 the NRC stated that based upon the Reference 3 submittal, they found that CGS satisfies all of the DCRDR requirements of Supplement 1 to NUREG-0737 and that TMI Item I.D.1.2 was considered

closed (note that NUREG O737 and its Supplement 1 do not have an Item 1.D.1.2; only I.D.1).

References:

1. *Letter, G. W. Knighton (NRC) to G. C. Sorensen (SS), "Detailed Control Room Design Review (TAC No. 56181)," dated October 13, 1987.*

2. *Letter, G. C. Sorensen (SS) to NRC, "Nuclear Plant No. 2, Detailed Control Room Design Review (TAC No. 56181)," GO2-88-074, dated March 29, 1988.*

3. *Letter, G. C. Sorensen (SS) to NRC, "Nuclear Plant No. 2, Operating License NPF-21 Detailed Control Room Design Review (TAC No. 56181)," GO2-91-198, dated October 29, 1991.*

4. *Letter, P. L. Eng (NRC) to G. C. Sorensen (SS), "Status of TMI Item I.D.1.1, 'Detailed Control Room Design Review' (DCRDR) at Washington Public Power Supply System Nuclear Project No. 2 (WNP-2) (TAC NO. 56181)," dated November 13, 1991.*

I.G.1 PREOPERATIONAL AND LOW-POWER TESTING

Position (NUREG-0660)

The objective is to increase the capability of the shift crews to operate facilities in a safe and competent manner by assuring that training for plant changes and off-normal events is conducted. Near-term operating license facilities will be required to develop and implement intensified training exercises during the low-power testing programs. This may involve the repetition of startup tests on different shifts for training purposes. Based on experience from the near-term operating license facilities, requirements may be applied to other new facilities or incorporated into the plant drill requirement (Item I.A.2.5). Review comprehensiveness of test programs.

NRR will require new operating licensees to conduct a set of low-power tests to accomplish the requirements. The set of tests will be determined on a case-by-case basis for the first few plants. Then NRR will develop acceptance criteria for low-power test programs to provide "hands on" training for plant evaluation and off-normal events for each operating shift. It is not expected that all tests will be required to be conducted by each operating shift. Observation by one shift of training of another shift may be acceptable.

NRR will develop criteria in conjunction with initial near-term operating license reviews.

Licensees will (1) define training plan prior to loading fuel, and (2) conduct training prior to full-power operation.

Clarification

None.

Columbia Generating Station Position

Energy Northwest committed to meet the intent of NUREG-0660 by performance of a special low power test subprogram which provided supplemental operator training in the areas of response to abnormal plant conditions and familiarity with critical systems. The special subprogram amplified the well-established training value of the Startup Test Program (STP) through (1) instruction on the content, goals, and requirements of the program, (2) addition of selected special tests to the STP to demonstrate abnormal scenarios and uses of critical systems and/or emergency operating procedures to control them, and (3) utilization of the knowledge and experience gained during the STP in the training programs for future operators.

The overall Startup Test Program is outlined in Chapter 14 while the conduct of operations is discussed in Chapter 13. During the preoperational and power ascension test phases, the operations personnel were intimately involved in the performance of the various test procedures. With the impetus provided by the responsible test phase organization, the operations staff was charged with establishing the required plant/system conditions, initiating and controlling the desired test transient and returning the plant/system to its normal condition. The operations staff provided the physical ability to accomplish the Startup Test Program. In this fashion, the completion of the Startup Test Program provided an unparalleled training opportunity for the operators.

The following outlines those additional actions Energy Northwest implemented to augment the extensive training benefits inherent in the existing STP program:

I. Development and Implementation of a Training Course on the STP

A. General Classroom Instruction (prior to testing)

1. STP Overview

a. Organization, Delineation of Responsibilities, Goals

b. Administrative and Emergency Procedures

c. Preop and Power Ascension Test Schedule

2. Review Selected STP Specifics, for example;

a. Pertinent Preop Test Purposes, Procedures, Anticipated Results

b. Integrated System Cold Functional Tests

c. Fuel Loading, Heatup, Power Ascension Test Purposes, Procedures, Anticipated Results

d. Special Test Subprogram Test Purposes, Procedures, Anticipated Results

3. Review Expected Utilization of STP Data

a. Documentation of Plant Safety

b. Feedback/Confirmation of Anticipated Results

B. Test Phase Instruction Performed by Test Director on a Shift Basis (during testing)

1. Review of the Immediate Test Schedule

2. Discussion of the Impending Tests: Procedures, Anticipated Results, Precautions

3. Review/Disseminate Plant Response Data from Previous Shift(s)

C. Post-STP Completion Instruction Performed by Test director (following testing)

1. Review Plant Design Changes/System Modifications Required

II. Development and Performance of a Special Test Subprogram

A. Additional RCIC System Tests

1. RCIC Operation Following Loss of AC Power to the System

2. RCIC Operation to Prove DC Separation

B. Integrated Reactor Vessel Level Instrumentation Functional Test

C. Integrated Containment Pressure Instrumentation Functional Test

D. Simulated Loss of Control and Instrument Air Test

E. Repetition of Some Normal STP Tests, for example:

1. Feedwater Pump Trip/Recirc Runback Demonstration

2. Turbine Trip/Generator Load Rejection Within Bypass Valve Capacity

3. Pressure Regulator Setpoint Changes

4. Recirculation Pump Trips

5. Feedwater Level Setpoint Changes

III. Utilization of the STP Data

A. Refine the CGS Simulator Response Models, as appropriate

B. Incorporate a Major Plant Transient Response Section in Operator Training Program, as appropriate

C. Update License Program Training and Requalification Material, as appropriate.

It was anticipated that every participating member of the operations staff would obtain valuable knowledge and experience through participation in the CGS Startup Test Program. Each received appropriate classroom instruction and through judicious scheduling of tests, most were exposed to a variety of plant/system transient responses (or review of results thereof). The training received is continually reinforced through normal requalification program refinements. Future license candidates also benefit from the training material upgrades resulting from the STP experience.

With this program outline, Energy Northwest met the intent of NUREG-0660, Item I.G.1. Specific details of the training program, additional test procedures, and documentation methods have been developed and are available for onsite NRC I&E review.

This position has been accepted in the NRC Safety Evaluation Report (NUREG-0892, dated December 1982, section 14.)

II.B.1 REACTOR COOLANT SYSTEM VENTS

Position

Each applicant and licensee shall install reactor coolant system (RCS) and reactor vessel head high point vents remotely operated from the control room. Although the purpose of the system is to vent noncondensable gases from the RCS which may inhibit core cooling during natural circulation, the vents must not lead to an unacceptable increase in the probability of a loss-of-coolant accident (LOCA) or a challenge to containment integrity. Since these vents form a part of the reactor coolant pressure boundary, the design of the events shall conform to the requirements of Appendix A to 10 CFR 50, "General Design Criteria." The vent system shall be designed with sufficient redundancy that ensures a low probability of inadvertent or irreversible actuation.

Each licensee shall provide the following information concerning the design and operation of the high point vent system:

a. Submit a description of the design, location, size, and power supply for the vent system along with results of analyses for LOCAs initiated by a break in the vent pipe. The results of the analyses should demonstrate compliance with the acceptance criteria of 10 CFR 50.46.

b. Submit procedures and supporting analysis for operator use of the vents that also include the information available to the operator for initiating or terminating vent usage.

Clarification

a. General

1. The important safety function enhanced by this venting capability is core cooling. For events beyond the present design basis, this venting capability will substantially increase the plant's ability to deal with large quantities of noncondensable gas which could interfere with core cooling.

2. Procedures addressing the use of the RCS vents should define the conditions under which the vents should be used as well as the conditions under which the vents should not be used. The procedures should be directed toward achieving a substantial increase in the plant being able to maintain core cooling without loss of containment integrity for events beyond the design basis. The use of vents for accidents within the

normal design basis must not result in a violation of the requirements of 10 CFR 50.44 or 10 CFR 50.46.

3. The size of the reactor coolant vents is not a critical issue. The desired venting capability can be achieved with vents in a fairly broad spectrum of sizes. The criteria for sizing a vent can be developed in several ways. One approach which may be considered is to specify a volume of noncondensable gas to be vented and in a specific venting time. For containments particularly vulnerable to failure from large hydrogen releases over a short period of time, the necessity and desirability for contained venting outside the containment must be considered (e.g., into a decay gas collection and storage system).

4. Where practical, the RCS vents should be kept smaller than the size corresponding to the definition of LOCA (10 CFR 50, Appendix A). This will minimize the challenges to the emergency core cooling system (ECCS) since the inadvertent opening of a vent smaller than the LOCA definition would not require ECCS actuation, although it may result in leakage beyond technical specification limits. On PWRs, the use of new or existing lines whose smallest orifice is larger than the LOCA definition will require a valve in series valve that can be closed from the control room to terminate the LOCA that would result if an open vent valve could not be reclosed.

5. A positive indication of valve position should be provided in the control room.

6. The reactor coolant vent system shall be operable from the control room.

7. Since the RCS vent will be part of the RCS pressure boundary, all requirements for the reactor pressure boundary must be met, and, in addition, sufficient redundancy should be incorporated into the design to minimize the probability of an inadvertent actuation of the system. Administrative procedures, may be a viable option to meet the single-failure criterion. For vents larger than the LOCA definition, an analysis is required to demonstrate compliance with 10 CFR 50.46.

8. The probability of a vent path failing to close, once opened, should be minimized; this is a new requirement. Each vent must have its power supplied from an emergency bus. A single failure within the power and control aspects of the reactor coolant vent system should not prevent

isolation of the entire vent system when required. On BWRs, block valves are not required in lines with safety valves that are used for venting.

9. Vent paths from the primary system to within containment should go to those areas that provide good mixing with containment air.

10. The reactor coolant vent system (i.e., vent valves, block valves, position indication devices, cable terminations, and piping) shall be seismically and environmentally qualified in accordance with IEEE 344-1975 as supplemented by Regulatory Guide 1.100, 1.92 and SEP 3.92, 3.43, and 3.10. Environmental qualifications are in accordance with the May 23, 1980 Commission Order and memorandum (CLI-80-21).

11. Provisions to test for operability of the reactor coolant vent system should be part of the design. Testing should be performed in accordance with subsection IWV of Section XI of the ASME Code for Category B valves.

12. It is important that the displays and controls added to the control room as a result of this requirement not increase the potential for operator error. A human-factor analysis should be performed taking into consideration:

    (a) The use of this information by an operator during both normal and abnormal plant conditions,

    (b) Integration into emergency procedures,

    (c) Integration into operator training, and

    (d) Other alarms during emergency and need for prioritization of alarms.

b. BWR Design Considerations

1. Since the BWR Owners' Group has suggested that the present BWR designs have an inherent capability to vent, a question relating to the capability of existing systems arises. The ability of these systems to vent the RCS of noncondensable gas generated during an accident must be demonstrated. Because of differences among the head vent systems for BWRs, each licensee or applicant should address the specific design features of this plant and compare them with the generic venting capability proposed by the BWR Owners' Group. In addition, the ability

of these systems to meet the same requirements as the PWR vent system must be documented.

2. In addition to RCS venting, each BWR licensee should address the ability to vent other systems, such as the isolation condenser which may be required to maintain adequate core cooling. If the production of a large amount of noncondensable gas would cause the loss of function of such a system, remote venting of that system is required. The qualifications of such a venting system should be the same as that required for PWR venting systems.

c. PWR Vent Design Considerations

1. Each PWR licensee should provide a capability to vent the reactor vessel head. The reactor vessel head vent should be capable of venting noncondensable gas from the reactor vessel hot legs (to the elevation of the top of the outlet nozzle) and cold legs (through head jets and other leakage paths).

2. Additional venting capability is required for those portions of each hot leg that cannot be vented through the reactor vessel head vent or pressurizer. It is impractical to vent each of the many thousands of tubes in a U-tube steam generator; however, the staff believes that a procedure can be developed that ensures sufficient liquid or steam can enter the U-tube region so that decay heat can be effectively removed from the RCS. Such operating procedures should incorporate this consideration.

3. Venting of the pressurizer is required to ensure its availability for system pressure and volume control. These are important considerations, especially during natural circulation.

Columbia Generating Station Position

The reactor coolant vent line is located at the very top of the reactor vessel as shown in Figure 3.6-51. This 2-in. line contains two safety-related Class 1E motor-operated valves (MS-V-1 and MS-V-2) that are operated from the control room. The location of this line permits it to vent the entire RCS normally connected to the reactor pressure vessel (RPV), with the exception of the reactor coolant isolation cooling (RCIC) head spray piping which comprises approximately 0.6 ft^3 of volume above the elevation of the RPV. This small volume was considered in the original design of the RCIC system and is of no consequence to its operation. In addition, since this vent line is part of the original design for the unit, it has already been considered in all the design basis accident analyses contained elsewhere in the FSAR.

The Columbia Generating Station (CGS) BWR/5 is provided with 18 power-operated safety grade relief valves which can be manually operated from the control room to vent the RPV. The point of connection to the vent lines (main steam lines) from near the top of the vessel to these valves is such that accumulation of gases above that point in the vessel will not affect natural circulation of the reactor core.

These power-operated relief valves satisfy the intent of the NRC position. Information regarding the design, qualification, power source, etc., of these valves is provided in Section 5.2.2.

The BWR Owners' Group position is that the requirement of single failure criteria for prevention of inadvertent actuation of these valves, and the requirement that power be removed during normal operation, are not applicable to BWRs. These valves serve an important function in mitigating the effects of transients and at CGS provide ASME code overpressure protection. Therefore, the addition of a second "block" valve to the vent lines would result in a less safe design and a violation of the code. Moreover, the inadvertent opening of a relief valve in a BWR is a design basis event and is a controllable transient.

In addition to these power-operated relief valves, the CGS BWR/5 includes various other means of high-point venting. Among these are

a. Normally closed reactor vessel head vent valves, operable from the control room, which discharge to the drywell;

b. Normally open reactor head vent line, which discharges to a main steam line;

c. Main steam-driven RCIC system turbines, operable from the control room, which exhaust to the suppression pool; and

d. Main steam-driven reactor feedwater pumps operable from the control room, which exhaust to the plant condenser when not isolated. Condenser gases are continuously processed through the offgas system.

Although the power-operated relief valves fully satisfy the intent of the venting requirement, these other means also provide protection against the accumulation of noncondensables in the RPV.

Under most circumstances, no selection of vent path is necessary because the relief valves [as part of the automatic depressurization system (ADS)], high-pressure core spray (HPCS), and RCIC will function automatically in their designed modes to ensure adequate core cooling and provide continuous venting to the suppression pool.

Analyses of inventory-threatening events with very severe degradations of system performance have been conducted. These were submitted by GE for the BWR Owners' Group to the NRC Bulletins and Orders Task Force on November 30, 1979. The fundamental conclusion of these studies was that if only one ECCS is injecting into the reactor, adequate core cooling would be provided and the production of large quantities of hydrogen would be avoided. Therefore, it is not desirable to interfere with ECCS functions to prevent venting.

The small-break accident (SBA) guidelines emphasize the use of HPCS/RCIC as a first line of defense for inventory-threatening events which do not quickly depressurize the reactor. If these systems succeed in maintaining inventory, it is desirable to leave them in operation until the decision to proceed to cold shutdown is made. Thus the reactor will be vented via RCIC turbine steam being discharged to the suppression pool. Termination of this mode of venting could also terminate inventory makeup if the HPCS had failed also. This would necessitate reactor depressurization via the safety/relief valve (SRV), which of course is another means of venting.

If the HPCS/RCIC are unable to maintain inventory, the SBA guidelines call for use of ADS or manual SRV actuation to depressurize the reactor so that the low-pressure coolant injection (LPCI) and/or low-pressure core spray (LPCS) systems can inject water. Thus, the reactor would be vented via the SRV to the suppression pool. Termination of this mode of venting is not recommended. It is preferable to remain unpressurized; however, if inventory makeup requires HPCS or RCIC restart, that can be accomplished manually by the operator. It is more desirable to establish and maintain core cooling than to avoid venting. If the HPCS/RCIC and SRVs are not operable (a very degraded and extremely unlikely case), another emergency means of venting the reactor must be used. It is emphasized, however, that such emergency venting would be in the interest of core cooling and, therefore, could be employed under Emergency Procedure Guidelines.

It is thus concluded that there is no reason to interfere with ECCS operation to avoid venting. It is further concluded that the Emergency Procedure Guidelines, by correctly specifying operator actions for HPCS, RCIC, and SRV operation, also correctly specify operator actions to vent the reactor.

In the event of HPCS failure and continued vessel pressurization, the effect of noncondensables in the RCIC turbine steam was evaluated for three cases:

1. Continuous evolution of noncondensables due to radiolysis,

2. Quasi-continuous evolution of noncondensables due to core heatup, and

3. The presence of a quantity of noncondensables in the reactor at the time of HPCS/RCIC startup.

Case 1 is a normal operating mode for RCIC and is of no concern.

For Case 2 to exist, the core must be uncovered. Such a condition requires multiple failures as shown in the degraded cooling analyses. Core uncovery is prevented (or cladding heatup into the rapid oxidation range is prevented) when only one ECCS is operating. For small pipe break or a loss of feedwater, which would allow the reactor to remain at pressure, the HPCS and/or RCIC pumps would maintain inventory and there would be no substantial hydrogen production. If neither HPCS nor RCIC could maintain inventory, the reactor would be automatically or manually depressurized via SRVs (or via the break, for larger breaks). Low-pressure water injection systems (LPCI or LPCS) would then make up inventory. With the core covered neither the rapid generation of noncondensables nor their accumulation would be possible.

The performance of RCIC under Case 3 is of concern only if there has been a very substantial production of hydrogen due to core uncovery and there is a need to start the RCIC. This is extremely unlikely and an intolerable circumstance, because it could arise only if the core were allowed to remain uncovered for a long period with the reactor at high pressure. Automatic depressurization system operation and explicit operating instructions and the Emergency Operator Guidelines are intended to preclude this. If the level has fallen with the reactor at high pressure, the vessel would be depressurized either automatically or manually to permit low pressure injection independent of RCIC performance.

In the post-LOCA condition, it is possible to have noncondensable gases come out of solution while operating the residual heat removal (RHR) system. These gases would accumulate at the top of the RHR heat exchanger since this is a system high point and an area of relatively low flow. Gases trapped here will be vented through a 2-in. vent line with two safety-related Class 1E motor-operated valves (MO-F073A and MO-F074A or MO-F073B and MO-F074B) operated from the control room (as shown in Figure 5.4-15). As this vent line and associated valves are part of the original design, they have also been considered in the design basis accident analysis contained elsewhere in the FSAR.

The result of a break in the SRV discharge piping, or any of the other pipe lines for the systems enumerated above, would be the same as a small steam line break. A complete steam line break is part of the design basis, and smaller size breaks have been shown to be of lesser severity. A number of reactor system blowdowns due to stuck-open relief valves (also equivalent to a small steam line break) have confirmed this in practice. Thus no new analyses are required to show conformance with 10 CFR 50.46.

Because the relief valves and RCIC will vent the reactor continuously, and because containment hydrogen calculations in normal safety analysis calculations assume continuous venting, no special analyses are required to demonstrate “that the direct venting of noncondensable gases with perhaps high hydrogen concentrations does not result in violation of combustible gas concentration limits in containment.”

Conclusion and Comparison with Requirements

The conclusion from this vent evaluation for CGS is as follows:

a. Reactor vessel head vent valves exist to relieve head pressure (at shutdown) to the drywell via remote operator action;

b. The reactor vessel head can be vented during operating conditions via the SRVs to the suppression pool;

c. The RCIC system provides an additional vent pathway to the suppression pool;

d. The size of the vents is not a critical issue because BWR SRVs have substantial capacity, exceeding the full power steaming rate of the nuclear boiler;

e. The SRVs vent to the containment suppression pool, where discharged steam is condensed without causing a rapid containment pressure/temperature transient;

f. The SRVs are not smaller than the NRC defined small LOCA. Inadvertent actuation is a design basis event and a demonstrated controllable transient;

g. Inadvertent actuation is of course undesirable, but since the SRVs serve an important protective function, no steps such as removal of power during normal operation should be taken to prevent inadvertent actuation;

h. A direct indication of SRV position is provided in the control room per Table 7.5-1, item 21. Temperature sensors in the discharge lines confirm possible valve leakage;

i. Each SRV is remotely operable from the control room;

j. Each SRV is seismically and Class 1E qualified;

k. Block valves are not required, so block valve qualifications are not applicable;

l. No new 10 CFR 50.46 conformance calculations are required because the vent provisions are part of the systems in the plant's original design and are covered by the original design bases; and

m. Plant procedures govern the operator's use of the relief mode for venting reactor pressure. These procedures are available for NRC inspection at the plant.

This position has been accepted in the NRC Safety Evaluation Report NUREG-0892, dated December 1982, section 5.4.3.1.

II.B.3 POSTACCIDENT SAMPLING CAPABILITY

Position

A design and operational review of the reactor coolant and containment atmosphere sampling line systems shall be performed to determine the capability of personnel to promptly obtain (less than 1 hr) a sample under accident conditions without incurring a radiation exposure to any individual in excess of 3 and 18.75 rem to the whole body or extremities, respectively. Accident conditions should assume a Regulatory Guide 1.3 or 1.4 release of fission products. If the review indicates that personnel could not promptly and safely obtain the samples, additional design features or shielding should be provided to meet the criteria.

A design and operational review of the radiological spectrum analysis facilities shall be performed to determine the capability to promptly quantify (in less than 2 hr) certain radionuclides that are indicators of the degree of core damage. Such radionuclides are noble gases (which indicate cladding failure), iodines and cesiums (which indicate high fuel temperatures), and nonvolatile isotopes (which indicate fuel melting). The initial reactor coolant spectrum should correspond to a Regulatory Guide 1.3 or 1.4 release. The review should also consider the effects of direct radiation from piping and components in the auxiliary building and possible contamination and direct radiation from airborne effluents. If the review indicates that the analyses required cannot be performed in a prompt manner with existing equipment, then design modifications or equipment procurement shall be undertaken to meet the criteria.

In addition to the radiological analyses, certain chemical analyses are necessary for monitoring reactor conditions. Procedures shall be provided to perform boron and chloride chemical analyses assuming a highly radioactive initial sample (Regulatory Guide 1.3 or 1.4 source term). Both analyses shall be capable of being completed promptly (i.e., the boron sample analysis within an hour and the chloride sample analysis within a shift).

Clarification

The following items are clarifications of requirements identified in NUREG-0578, NUREG-0660, or the September 13 and October 30, 1979, clarification letters.

a. The licensee shall have the capability to promptly obtain reactor coolant samples and containment atmosphere samples. The combined time allotted for sampling and analysis should be 3 hr or less from the time a decision is made to take a sample.

b. The licensee shall establish an onsite radiological and chemical analysis capability to provide, within the 3-hr time frame established above, quantification of the following:

1. Certain radionuclides in the reactor coolant and containment atmosphere that may be indicators of the degree of core damage (e.g., noble gases, iodines and cesiums, and nonvolatile isotopes),

2. Hydrogen levels in the containment atmosphere,

3. Dissolved gases (e.g., H_2), chloride (time allotted for analysis subject to discussion below), and boron concentration of liquids, and

4. Alternatively, have inline monitoring capabilities to perform all or part of the above analyses.

c. Reactor coolant and containment atmosphere sampling during postaccident conditions shall not require an isolated auxiliary system [e.g., the letdown system, reactor water cleanup (RWCU) system] to be placed in operation to use the sampling system.

d. Pressurized reactor coolant samples are not required if the licensee can quantify the amount of dissolved gases with unpressurized reactor coolant samples. The measurement of either total dissolved gases or H_2 gas in reactor coolant samples is considered adequate. Measuring the O_2 concentration is recommended but is not mandatory.

e. The time for a chloride analysis to be performed is dependent on two factors: (1) if the plant's coolant water is seawater or brackish water, and (2) if there is only a single barrier between primary containment systems and the cooling water. Under both of the above conditions the licensee shall provide for a chloride analysis within 24 hr of the sample being taken. For all other cases, the licensee shall provide for the analysis to be completed within 4 days. The chloride analysis does not have to be done onsite.

f. The design basis for plant equipment for reactor coolant and containment atmosphere sampling and analysis must assume that it is possible to obtain and analyze a sample without radiation exposures to any individual exceeding the criteria of General Design Criterion (GDC) 19 (Appendix A, 10 CFR 50) (i.e., 5 rem whole body, 75 rem extremities). (Note that the design and operational review criterion was changed from the operational limits of 10 CFR 20 (NUREG-0578) to the GDC 19 criterion (October 30, 1979, letter from H. R. Denton to all licensees.)

g. The analysis of primary coolant samples for boron is required for PWRs. (Note that Revision 2 of Regulatory Guide 1.97, when issued, will likely specify the need for primary coolant boron analysis capability at BWR plants.)

h. If inline monitoring is used for any sampling and analytical capability specified herein, the licensee shall provide backup sampling through grab samples and shall demonstrate the capability of analyzing the samples. Established planning for analysis at offsite facilities is acceptable. Equipment provided for backup sampling shall be capable of providing at least one sample per day for 7 days following onset of the accident and at least one sample per week until the accident condition no longer exists.

i. The licensee's radiological and chemical sample analysis capability shall include provisions to:

1. Identify and quantify the isotopes of the nuclide categories discussed above to levels corresponding to the source terms given in Regulatory Guides 1.3 or 1.4 and 1.7. Where necessary and practicable, the ability to dilute samples to provide capability for measurement and reduction of personnel exposure should be provided. Sensitivity of onsite liquid sample analysis capability should be such as to permit measurement of nuclide concentration in the range from approximately 1 μCi/g to 10 Ci/g.

2. Restrict background levels of radiation in the radiological and chemical analysis facility from sources such that the sample analysis will provide results with an acceptably small error (approximately a factor of 2). This can be accomplished through the use of sufficient shielding around samples and outside sources, and by the use of ventilation system design which will control the presence of airborne radioactivity.

j. Accuracy, range, and sensitivity shall be adequate to provide pertinent data to the operator in order to describe radiological and chemical status of the reactor coolant systems.

k. In the design of the postaccident sampling and analysis capability, consideration should be given to the following items:

1. Provisions for purging sample lines, for reducing plateout in sample lines, for minimizing sample loss or distortion, for preventing blockage of sample lines by loose material in the RCS or containment, for appropriate disposal of the samples, and for flow restrictions to limit

reactor coolant loss from a rupture of the sample line. The postaccident reactor coolant and containment atmosphere samples should be representative of the reactor coolant in the core area and the containment atmosphere following a transient or accident. The sample lines should be as short as possible to minimize the volume of fluid to be taken from containment. The residues of sample collection should be returned to containment or to a closed system.

2. *The ventilation exhaust from the sampling station should be filtered with charcoal adsorbers and high-efficiency particulate air (HEPA) filters.*

3. *Guidelines for analytical or instrumentation range are given in Table II.B.3-1.*

Columbia Generating Station Position

This italicized information is historical and was provided to support the application for an operating license. The FSAR contains a description of the postaccident sampling system in Section 11.6.

Columbia Generating Station is using a General Electric postaccident sampling system capable of sampling the primary containment and reactor building atmosphere and of obtaining liquid samples from the reactor, RHR loops, and various reactor building sumps. This system is designed to obtain grab samples which may be analyzed onsite or transported to offsite facilities for more detailed analysis if necessary. The sample station is located in the radwaste building and is shielded to reduce radiation exposure rates to the operator. All remote-operated valves are controlled from this area. Lead pigs are provided for radiation protection when transporting samples either to onsite facilities or offsite. A more detailed description follows.

Gas samples will be obtained from locations in the drywell, the suppression pool atmosphere, and from the secondary containment atmosphere. The sample system is designed to operate at pressures ranging from subatmospheric to maximum design pressures of the primary and secondary containment. Heat-traced sample lines are used outside the primary containment to prevent precipitation of moisture and resultant loss of particulates and iodines in the sample lines. The gas samples may be passed through a particulate filter and silver zeolite cartridge for determination of particulate activity and iodine activity by subsequent analysis of the samples on a gamma spectrometer system. Alternatively, the sample flow bypasses the particulate/iodine sampler, is chilled to remove moisture, and a 15-ml grab sample can be taken for determination of gaseous radioactivity and for gas composition by gas chromatography. This size sample vial has been adopted for all gas samples to be consistent with present offgas sample vial counting factors.

Reactor coolant samples will be obtained from two points in the jet pump pressure instrument system when the reactor is at pressure. The jet pump pressure system has been determined to be an optimum sample point for accident conditions. The pressure taps are well protected from damage and debris. If the recirculation pumps are secured, the water level will be raised about 18 in. above normal. This provides natural circulation of the bulk coolant past the taps. Also, the pressure taps are located sufficiently low to permit sampling at a reactor water level even below the lower core support plate.

A single sample line is also connected to both loops in the RHR system. This provides a means of obtaining a reactor coolant sample when the reactor is depressurized and at least one of the RHR loops is operated in the shutdown cooling mode. Similarly, a suppression pool liquid sample can be obtained from the RHR loop lined up in the suppression pool cooling mode. Samples from the five drain sumps in the reactor building are also available.

The sample system isolation valves are controlled from the local control panel. The sample system is designed for a purge flow of 1 gpm, which is sufficient to maintain turbulent flow in the sample line. Purge flow is returned to the suppression pool. The high flush flow also serves to alleviate cross-contamination of the samples when switching from one sample point to another.

All liquid samples are taken into septum bottles mounted on sampling needles. The sample station is basically a bypass loop on the sample purge line. In the normal lineup, the sample flows through a conductivity cell (readable range 0.1 to 1000 μS/cm) and then through a ball valve bored out to 0.10-ml volume. Flow through the sample panel is established, the valve is rotated 90°, and a syringe is used to flush the sample plus a measured volume of diluent (generally 10 ml) through the valve and into the sample bottle. This provides a dilution of 100:1 to the sample. Alternatively, the valve sampling sequence can be repeated 10 times to provide a 1-ml sample diluted 10:1. The sample is transported to the laboratory for further dilution and subsequent analysis. Alternatively, the sample flow can be diverted through a 70-ml bomb to obtain a large pressurized volume. This 70-ml volume can be circulated and depressurized into a known volume gas expansion chamber. The pressure change in this chamber will be used to calculate the total dissolved gases in the reactor coolant. A grab sample of these gases may be taken through a septum port for subsequent analysis. Ten milliliter aliquots of this degassed liquid can also be taken for on or offsite chemical analyses requiring a relatively large sample. A radiation monitor in the liquid sample enclosure monitors liquid flow from the sample station to provide immediate assessment of the sample activity level. This monitor also provides information as to the effectiveness of the demineralized water flushing of the sample system following sample operation. The control instrumentation is installed in two 2 ft x 2 ft x 6 ft high standard cabinet control panels. One panel contains the conductivity and radiation level readouts. Another control panel contains the flow, pressure and temperature indicators, and the various control valves and switches.

A graphic display panel, installed directly below the main control panel, shows the status of the pumps and valves at all times. The panel also indicates the relative position of the pressure gauges and other items of concern to the operator. The use of this panel will improve operator comprehension and assist in trouble-shooting operation.

Appropriate sample handling tools, a gas sampler vial positioner and gas vial cask are available to the operator at the sampling station. The gas vial is installed and removed by use of the vial positioner through the front of the gas sampler. The vial is then manually placed down in the cask with the positioner which allows the vial to be maintained about 3 ft from the individual performing the operation.

The small-volume (10 ml) liquid sample is remotely obtained through the bottom of the sample station by use of the small-volume cask and cask positioner. The cask positioner holds the cask and positions the cask directly under the liquid sampler. The sample vial is manually raised within the cask to engage the hypodermic needles. When the sample vial has been filled, the bottle is manually withdrawn into the cask. The sample vial is always contained within lead shielding during this operation. The cask is then lowered and sealed prior to transport to the laboratory.

A large-volume cask and cask positioner is available for transporting large liquid samples. A 21-ml bottle is contained within a lead shielded cask. This sample bottle is raised from its location in the cask to the sample station needles for bottle filling. The sample station will only deliver 10 ml to this sample bottle. When filled, the bottle is withdrawn into the cask. The sample bottle is always shielded by 5 to 6 in. of lead when in position under the sample station and during the fill and withdraw cycles, thus reducing operator exposure.

The cask is transported to the required position under the sample station by a dolly cask positioner. When in position this cask is hydraulically elevated approximately 1.5 in. by a small hand pump for contact with the sample station shielding under the liquid sample enclosure floor. The sample bottle is raised, held, and lowered by a simple push/pull cable. The cask is sealed by a threaded top plug that inserts above the sample bottle. The weight of this large-volume cask is approximately 700 lb.

The particulate filters and iodine cartridges are removed via a drawer arrangement. The quantity of activity which is accumulated on the cartridges is controlled by a combination of flow orificing and time sequence control of the flow valve opening. In addition, the deposition of iodine is monitored during sampling using a radiation detector installed adjacent to the cartridge. These samples will hence be limited to activity levels which will normally not require shielded sample carriers to transport the samples to the laboratory.

The power supply to the sample station and all associated equipment will not be shed during accident conditions. The system design is such that a sample can be drawn and analyzed within the required 3 hr, after a 1 hr preparation time.

The postaccident sampling station will provide conductivity measurements in line as an indicator of liquid chemical concentrations and changing chemical conditions. The system allows collection of grab samples for gas analysis of O_2, N_2, H_2, and direct gamma spectrometric determination of aliquots of gas samples. The system also allows collection of iodine samples on a silver zeolite cartridge to minimize noble gas interference in the determination of iodine isotopic content. Liquid samples will be analyzed for pH using a semimicro pH electrode and additionally analyzed for boron and chloride using ion chromatography. An aliquot of the sample may also be analyzed for gross activity or isotopic content by gamma ray spectrometry. All laboratory analysis meet Regulatory Guide 1.97 requirements for sensitivity and range, with the exception of the range for dissolved gases. However, the analytical capability for dissolved gases is consistent with the maximum dissolved gas concentrations expected for BWRs.

The postaccident sample system will be used quarterly for operability testing. During this testing a reactor coolant sample will be taken and analyzed for gamma isotopic content. In addition, a containment atmosphere sample will be taken and analyzed for gas composition and gamma isotopic content. The results of these analyses will be compared, where possible, to results obtained through normal plant sampling systems to verify the representatives of postaccident system samples. Classroom and practical factors training will be provided on system operation, as well as proper handling and analysis of highly radioactive samples. Refresher training will be provided annually.

A yearly drill will be performed in which the postaccident sample system will be used to obtain samples. These samples will be drawn, transported, and analyzed for accident parameters as if they were postaccident highly radioactive samples.

Based on information developed by General Electric, Energy Northwest has developed plant-specific procedures for the determination of the extent of core damage under accident conditions. The procedures provide for distinguishing between fuel cladding failure and fuel melt based on isotopes present and concentration. The extent of damage is based on concentrations present of isotopic mixture of xenon, krypton, iodine, and cesium.

The estimated maximum potential whole body dose to retrieve a reactor coolant sample under worst-case accident conditions is 0.36 rem; the source being airborne noble gas activity in the radwaste building from effluent releases. Lapsed time is about 1 hr.

The maximum dose rate from a 0.1 ml reactor coolant sample (1 hr decay) in a 4-in.-thick lead transport cask is less than 5 mR/hr at 1 ft. Exposure to analyze a sample is expected to be less than 100 mR.

All valves used are fully qualified for the environment in which they are located inside and outside reactor containment.

Power for the postaccident sampling equipment is supplied from either Division 1 or Division 2 critical power sources and will be available during accident conditions.

The staff review of this position in NUREG-0892, dated December 1982, recognized several issues requiring resolution and consolidated them in Licensing Condition 9. Subsequent Energy Northwest submittals, primarily Amendment 23 to the FSAR, resulted in the staff finding the postaccident sampling system acceptable in Supplement 4 NUREG-0892, section 9.3.2.4. A requirement to have the system completed and operable prior to exceeding 5% power was made a condition to the license (NPF-21 issued December 20, 1983). Energy Northwest letter GO2-84-272 dated April 27, 1984, reported the system completed and operable thus satisfying the licensing condition.

II.F.1.3 Containment High-Range Radiation Monitor

Position

Radiation level monitors with a maximum range of 10^8 R/hr shall be installed in containment. A minimum of two such monitors that are physically separated shall be provided. Monitors shall be developed and qualified to function in an accident environment.

Clarification

a. Provide two radiation monitor systems in containment which are documented to meet the requirements of Table II.F.1-3.

b. The specification of 10^8 R/hr in the above position was based on a calculation of postaccident containment radiation levels that included both particulate (beta) and photon (gamma) radiation. A radiation detector that responds to both beta and gamma radiation cannot be qualified to post-LOCA containment environments but gamma-sensitive instruments can be so qualified. To follow the course of an accident, a containment monitor that measures only gamma radiation is adequate. The requirement was revised in the October 30, 1979, letter to provide for a photon-only measurement with an upper range of 10^7 R/hr.

c. The monitors shall be located in containment(s) in a manner as to provide a reasonable assessment of area radiation conditions inside containment. The monitors shall be widely separated so as to provide independent measurements and shall "view" a large fraction of the containment volume. Monitors should not be placed in areas which are protected by massive shielding and should be reasonably accessible for replacement, maintenance, or calibration. Placement

high in a reactor building dome is not recommended because of potential maintenance difficulties.

d. For BWR Mark III containments, two such monitoring systems should be inside both the primary containment (drywell) and the secondary containment.

e. The monitors are required to respond to gamma photons with energies as low as 60 keV and to provide an essentially flat response for gamma energies between 100 keV and 3 MeV, as specified in Table II.F.1-3. Monitors that use thick shielding to increase the upper range will underestimate postaccident radiation levels in containment by several orders of magnitude because of their insensitivity to low energy gammas and are not acceptable.

Columbia Generating Station Position

This italicized text is historical and was provided to support the application for an operating license. The FSAR contains descriptions for these monitors in Sections 7.5.1.5.3, 7.5.2.2.3, 11.5.2.2.3.2, and Table 7.5-1, item 8.

Columbia Generating Station concurs with the intent of this position and has installed high range gamma detection monitors in the following primary containment locations:

a. 515 ft level Azimuth 290°and
b. 516 ft level Azimuth 51.5°.

The detectors are unshielded and mounted on the wall in areas least influenced by shielding due to surrounding piping, etc. They are accessible for calibration and will be calibrated according to the Technical Specifications. Plant drawings will be revised to reflect their addition and location.

This position has been accepted in the NRC Safety Evaluation Report, NUREG-0892, dated December 1982, section 12.3.4.1.

Table II.F.1-3

Containment High-Range Radiation Monitor

Requirement	-	The capability to detect and measure the radiation level within the reactor containment during and following an accident.
Range	-	1 rad/hr to 10^8 rads/hr (beta and gamma) or alternatively 1 R/hr to 10^7 R/hr (gamma only).
Response	-	60 keV to 3 MeV photons, with linear energy response $\pm 20\%$) for photons of 0.1 MeV to 3 MeV. Instruments must be accurate enough to provide usable information.
Redundant	-	A minimum of two physically separated monitors (i.e., monitoring widely separated spaces within containment).
Design and qualification	-	Category 1 instruments as described in Appendix A, except as listed below.
Special calibration	-	In situ calibration by electronic signal substitution is acceptable for all range decades above 10 R/hr. In situ calibration for at least one decade below 10 R/hr shall be by means of calibrated radiation source. The original laboratory calibration is not an acceptable position due to the possible differences after in situ installation. For high-range calibration, no adequate sources exist, so an alternate was provided.
Special environmental qualifications	-	Calibrate and type-test representative specimens of detectors at sufficient points to demonstrate linearity through all scales up to 10^6 R/hr. Prior to initial use, certify calibration of each detector for at least one point per decade of range between 1 R/hr and 10^3 R/hr.

II.F.1.4 Containment Pressure Monitor

Position

A continuous indication of containment pressure shall be provided in the control room of each operating reactor. Measurement and indication capability shall include three times the design pressure of the containment for concrete, four times the design pressure for steel, and -5 psig for all containments.

Clarification

a. Design and qualification criteria are outlined in Appendix A;

b. Measurement and indication capability shall extend to 5 psia for subatmospheric containments;

c. Two or more instruments may be used to meet requirements. However, instruments that need to be switched from one scale to another scale to meet the range requirements are not acceptable;

d. Continuous display and recording of the containment pressure over the specified range in the control room is required; and

e. The accuracy and response time specifications of the pressure monitor shall be provided and justified to be adequate for their intended function.

Columbia Generating Station Position

This italicized information is historical and was provided to support the application for an operating license. The FSAR contains descriptions for these monitors in the following sections: 7.5.1.5.1, 7.5.2.2.3, and Table 7.5-1, item 37.

Columbia Generating Station has designed a system to meet this criteria. A description of the system is provided in Section 7.5.

The range, accuracy, and response time of these instruments are

Range = -5 to +3 psig
0 to 25 psig
0 to 180 psig

Instrument accuracy (loop) = ±2% of full scale

Response time = *0 to 100% full scale in less that 1 sec*

This position has been accepted in the NRC Safety Evaluation Report NUREG-0892, dated December 1982, sections 6.2.1.1.1 and 7.5.2.6.

II.F.1.5 Containment Water Level Monitor Position

A continuous indication of containment water level shall be provided in the control room for all plants. A narrow range instrument shall be provided for PWRs and cover the range from the bottom to the top of the containment sump. A wide range instrument shall also be provided for PWRs and shall cover the range from the bottom of the containment to the elevation equivalent to a 600,000-gal capacity. For BWRs, a wide range instrument shall be provided and cover the range from the bottom to 5 ft above the normal water level of the suppression pool.

Clarification

a. The containment wide-range water level indication channels shall meet the design and qualification criteria as outlined in Appendix A. The narrow-range channel shall meet the requirements of Regulatory Guide 1.89;

b. The measurement capability of 600,000 gal is based on recent plant designs. For older plants with smaller water capacities, licensees may propose deviations from this requirement based on the available water supply capability at their plant;

c. Narrow-range water level monitors are required for all sizes of sumps but are not required in those plants that do not contain sumps inside the containment;

d. For BWR pressure-suppression containments, the ECCS suction line inlets may be used as a starting reference point for the narrow-range and wide-range water level monitors, instead of the bottom of the suppression pool; and

e. The accuracy requirements of the water level monitors shall be provided and justified to be adequate for their intended function.

Columbia Generating Station Position

This italicized information is historical and was provided to support the application for an operating license. The FSAR contains descriptions for these monitors in the following sections: 7.5.1.5.7, 7.5.2.2.3, and Table 7.5-1, item 14.

In Columbia Generating Station, the variable to be measured is the suppression chamber water level. Columbia Generating Station has expanded its suppression chamber water level instruments to cover this requirement. A description is provided in Section 7.5.

The accuracy and response time of this instrument are

Instrument accuracy = ± of full scale
Instrument response time = 0 to 100% of full scale in less than 1 sec

This position has been accepted in the NRC Safety Evaluation Report NUREG-0892, dated December 1982, sections 6.2.1.1.2 and 7.5.2.6.

II.F.1.6 Containment Hydrogen Monitor

Position

A continuous indication of hydrogen concentration in the containment atmosphere shall be provided in the control room. Measurement capability shall be provided over the range of 0 to 10% hydrogen concentration under both positive and negative ambient pressure.

Clarification

a. Design and qualification criteria are outlined in Appendix A,

b. The continuous indication of hydrogen concentration is not required during normal operation,

If an indication is not available at all times, continuous indication and recording shall be functioning within 30 minutes of the initiation of safety injection, and

c. The accuracy and placement of the hydrogen monitors shall be provided and justified to be adequate for their intended function.

Columbia Generating Station Position

This italicized information is historical and was provided to support the application for an operating license. The FSAR contains descriptions for these monitors in the following sections: 6.2.5.2.2, 7.5.1.5.4, 7.5.2.2.3, and Table 7.5-1, item 10.

Columbia Generating Station concurs with the intent of this position. The existing monitors are redundant and provide continuous display and redundant recording in the control room. The instruments are seismically and environmentally qualified to Class 1 requirements with a range

of 0-30% hydrogen concentration. A complete design description is provided in Section 6.2.5.2.

The accuracy of this instrument is

Instrument accuracy (loop) = ±0.2% H_2 in the range 2-6 H_2 and
±2.0% for remainder of full scale

II.F.2 INSTRUMENTATION FOR DETECTION OF INADEQUATE CORE COOLING

Position

Licensees shall provide a description of any additional instrumentation or controls (primary or backup) proposed for the plant to supplement existing instrumentation (including primary coolant saturation monitors) in order to provide an unambiguous, easy-to-interpret indication of inadequate core cooling (ICC). A description of the functional design requirements for the system shall also be included. A description of the procedures to be used with the proposed equipment, the analysis used in developing these procedures, and a schedule for installing the equipment shall be provided (NUREG-0737).

Clarification

None.

Columbia Generating Station Position

CGS actively participated in the efforts of the BWR Owner's Group (BWROG) and the Licensing Review Group (LRG) to develop an industry understanding of NRC's concerns and an approach to detect inadequate core cooling.

An analysis of in-core thermocouples, as proposed in recently published Safety Evaluation Reports applicable to BWRs, led the BWROG, LRG, and CGS to conclude that in-core thermocouples did not serve as effective instruments for detection of inadequate core cooling and did not substantially improve the safety of the plant. The two major deficiencies of incore thermocouples are inadequate (i.e., long) response time and potentially erroneous indications. In addition, a risk assessment of the effect on the addition of in-core thermocouples has concluded that even if in-core thermocouples were arbitrarily assumed to provide an effective backup to the plant water level detectors, overall plant risk would not be significantly reduced. Based on this risk analysis, in-core thermocouples were not considered to be a cost effective modification for CGS. The results of the above studies were presented to the NRC by the BWROG and LRG executives in a meeting in Bethesda on December 17, 1981.

In Operating License NF-21 issued December 19, 1983 the staff conditioned the license to "implement the staff's requirements regarding additional instrumentation for detection of inadequate core cooling which may result from the staff's review of the BWR Owner's Group reports (SLI 8211 and SLI 8218)…." Generic Letter 84-23 comprised the staff's review and requested additional information. The Energy Northwest response to Generic Letter 84-23, Letter GO2-84-617 dated November 27, 1984, satisfied the licensing condition and closed this issue.

II.K.1.5 Assurance of Proper Engineered Safety Feature Functioning

Position

Review all valve positions, positioning requirements, positive controls, and related test and maintenance procedures to ensure proper engineered safety feature (ESF) functioning. See NRC Bulletins 79-06A Item 8, 79-06B Item 7, and 79-08 Item 6.

This requirement shall be met before fuel loading.

Clarification

None.

Columbia Generating Station Position

This italicized information is historical and was provided to support the application for an operating license. The FSAR discusses this topic in Sections 7.1.2.4, 7.3.1.1, 7.3.2.1.2, 7.3.2.1.3, and Appendix B, Section I.C.6.

Directives on valve positioning requirements, positive controls, and test and maintenance procedures associated with ESF systems have been prepared. Motor-operated valves in safety systems are normally maintained in a configuration such as to require the least number of valve automatic movements on system actuation. System initiation logic is such that valves automatically move to the required position when required. The position of vital manual ECCS valves is controlled by the use of and documentation of locks on valve handwheels. In addition, numerous vital manual valves have position status indicating lights in the control room.

Columbia Generating Station is equipped with ESF system status displays, which continuously monitor the ESF systems and provide indication to the operator of a system bypass or inoperability introduced during testing or maintenance which renders the system(s) unable to respond to an initiation signal. Typical parameters monitored include the following:

a. Valve position,

b. Power available to motor-operated valves,
c. Initiation logic power available,
d. Power sources (including emergency diesels) available, and
e. Breaker status.

Alarms are provided on a system level basis. Indication is provided on a component level basis.

Surveillance and testing procedures for ESF systems will include checks to ensure the system is returned to standby status on completion of testing.

When ESF equipment is removed from service for maintenance, procedures require documentation of removal and return to service. Functional tests of equipment returned to service following maintenance are required by these procedures to ensure operability. NUREG-0892, the WNP-2 Safety Evaluation Report, discussed this issue and listed confirmation of procedures as confirmatory issue No. 22. Energy Northwest letter GO2-83-247 dated March 23, 1983, "Confirmatory Issue No. 22, Assurance of ESF Functioning (II.K.1.5) and Safety-Related System Operability Status (II.K.1.10)," satisfied the confirmatory issue, subsequently listed as resolved in Supplement 4 to NUREG-0892.

II.K.1.22 Proper Functioning of Heat Removal Systems

Position

Describe the actions, both automatic and manual, necessary for proper functioning of the auxiliary heat removal systems (e.g., RCIC) that are used when the main feedwater system is not operable. For any manual action necessary, describe in summary form the procedure by which this action is taken in a timely sense. (IE Bulletin 79-08).

Clarification

None.

Columbia Generating Station Position

This italicized information is historical and was provided to support the application for an operating license. The FSAR contains information regarding RCIC operation in Sections 5.4.6 and 7.4.1.1; information regarding HPCS is contained in 6.3.2.2.1 and 7.3.1.1.1.1. RHR information is contained in Sections 5.4.7.1.1, 6.2.2 and 7.3.1.1.5 (suppression pool cooling mode) and 5.4.7.1.5 and 5.4.7.2.6 (shutdown cooling mode).

Energy Northwest letter GO2-80-107, dated May 23, 1980, responded to IE Bulletin 79-08. Additional information pertaining to the above requirement is provided below.

Initial Core Cooling:

Following a loss of feedwater and reactor scram, a low reactor water level signal (level 2) will automatically initiate main steam line isolation valve closure. At the same time this signal will put the HPCS and RCIC systems into the reactor coolant makeup injection mode. These systems will continue to inject water into the vessel until a high water level signal (level 8) automatically trips RCIC and closes the HPCS injection valve. The HPCS pump remains running on minimum flow bypass.

Following a high reactor water level 8 trip, the HPCS injection valve will automatically reopen when reactor water level decreases to low water level 2. The RCIC system will automatically reinitiate after a high water level 8 trip when reactor water level decreases to low water level trip 2.

The HPCS and RCIC systems have redundant supplies of water. Normally they take suction from the condensate storage tank (CST). The HPCS and RCIC systems suctions will automatically transfer from the CST to the suppression pool if the CST water is depleted or, for the HPCS system, the suppression pool water level increases to a high level.

The RCIC system will start automatically on receipt of a low water level (level 2) initiation signal. On receipt of this initiation signal, the following events occur simultaneously unless otherwise noted:

a. Test bypass valves to condensate storage tank closes (if open);

b. Steam supply valve to turbine opens;

c. Pump discharge injection valve opens when the turbine steam supply valve is open;

d. Gland seal system starts;

e. Cooling water supply valve to lube oil cooler opens;

f. Pump suction valve from condensate storage tank opens (if closed);

g. The turbine control system brings the turbine up to speed as soon as the steam supply valve leaves its full closed position. Pump discharge flow develops as soon as the pump discharge pressure is sufficient to open the check valve between the pump and the reactor vessel. As pump discharge and steam inlet pressure change with a variable reactor pressure range, the control signal will be sent to the turbine to maintain constant steady state pump flow; and

h. When pump discharge pressure reaches a predetermined pressure, the minimum flow valve opens until system flow reaches a predetermined flow, then it will close.

RCIC flow may be directed away from the vessel by diverting the pump discharge to the CST. This is accomplished by closing injection valve RCIC-V-13 and opening the test return valves (RCIC-V-22 and 59). The system is returned to injection mode by closing RCIC-V-59 and then opening RCIC-V-13. This mode of operation will not be used during events where an unacceptable source term is identified in primary containment. Diverting RCIC flow to the CST is not a safety-related function nor does this mode affect the ability of RCIC to initiate during plant transients. The system automatically switches to injection mode if the water level decreases to the low level initiation point (Level 2).

The HPCS system will start automatically upon receipt of a low water level (level 2) initiation signal. Upon receipt of this initiation signal, the following events occur simultaneously unless otherwise noted:

a. High-pressure core spray diesel generator starts;

b. High-pressure core spray pump starts;

c. High-pressure core spray suction valve and HPCS injection valve open;

d. Suppression pool test return and bypass valves close (if open);

e. Minimum flow bypass valve automatically opens if HPCS pump is delivering pressure and system flow is low. Minimum flow bypass valve automatically closes when the flow rate from the pump reaches a predetermined flow;

f. High-pressure core spray service water pumps starts; and

g. High-pressure core spray room cooler fan starts.

The operator can manually initiate the HPCS and RCIC systems from the control room before the level 2 automatic initiation level is reached. The operator has the option of manual control after automatic initiation. The operator can verify that these systems are delivering water to the reactor vessel by

a. Verifying reactor water level increases when systems initiate,

b. Verifying systems flow using flow indicators in the control room, and

c. Verifying system flow is to the reactor by checking control room position indication of motor-operated valves. This ensures no diversion of system flow to other than the reactor.

Therefore, the HPCS and RCIC can maintain reactor water level at full reactor pressure and until pressure decreases to where low pressure systems such as the LPCS of LPCI can maintain water level.

Containment Cooling:

After reactor scram and isolation and establishment of satisfactory core cooling, the operator would start containment cooling. This mode of operation removes heat resulting from SRV discharge to the suppression pool. This would be accomplished by placing the RHR system in the containment/suppression pool cooling mode, or the suppression pool spray mode, i.e., RHR suction from and discharge to the suppression pool. A summary of the operator actions is given in the following:

a. Start the associated RHR standby service water (SW) pump, if not already running,

b. Open the SW pump discharge valve, if not already open,

c. Open the SW loop return valve, if not already open,

d. Start the associated RHR pump,

e. Close the associated RHR heat exchanger bypass valve,

f. Adjust system flow by adjusting the RHR test return valve if in the suppression pool cooling mode, and

g. Open the suppression pool spray valve if in the spray mode.

The Operator could verify proper operation of the RHR system containment cooling function from the control room by the following:

a. Verifying RHR and SW system flow using system control room flow indicators,

b. Verifying correct RHR and SW system flow paths using control room position indication of motor-operated valves, and

c. On branch lines that could divert flow from the required flow paths, closing the motor-operated valves and noting the effect on RHR and SW flow rate.

Extended Core Cooling:

When the reactor has been depressurized, the RHR system can be placed in the long-term shutdown cooling mode. The operator manually terminates the containment cooling mode of one of the RHR loops and places the loop in the shutdown cooling mode as follows:

a. Trip the RHR pump to be used for shutdown cooling,

b. Close associated motor-operated valve in the suppression pool suction and LPCI discharge line to the vessel,

c. Open shutdown cooling suction valves from and discharge valves to the reactor vessel, and

d. Restart the RHR pump.

In this operating mode, the RHR system can cool the reactor to cold shutdown. Proper operation and flow paths in this mode can be verified by methods similar to those described for the containment cooling mode.

In conclusion, the plant design is fully adequate to meet the intent of the requirements of auxiliary heat removal when the main system is inoperable.

II.K.1.23 Reactor Vessel Level Instrumentation

Position

Describe all uses and types of vessel level indication for both automatic and manual initiation of safety systems. Describe other redundant instrumentation which the operator might have to give the same information regarding plant status. Instruct operators to utilize other available information to initiate safety systems (IE Bulletin 79-08).

Clarification

None.

Columbia Generating Station Position

This italicized information is historical and was provided to support the application for an operating license. The FSAR contains descriptions for the Reactor Vessel Level

Instrumentation and the design basis of the Safety Related Display Instrumentation in the following sections: 7.5.1.1.1, 7.7.1.1.2.2, 7.7.1.4.2.1, 7.5.2, and Table 7.5-1.

NEDO-24708 describes the multiple water level instrumentation provided in the BWR control room for the operator. An outline of the specific indication for Columbia Generating Station is provided in the following paragraphs, which fully meets the intent of the plant requirements and the NRC requirements.

Reactor vessel water level is continuously monitored by four recorders for normal, transient, and accident conditions. These four instruments are divided into two divisions of two instruments each to provide an overlapping range from above the maximum operating level to below the active core. Thus, adequate information is provided to the operator for manual initiation of safety actions and for assurance of the vessel water level at all times.

Those sensors used to provide automatic safety equipment initiation are arranged in a four-quadrant vessel tap configuration with the four sensors divided electrically between two divisions.

In addition, the operating procedures will reflect the requirements for the operators to also rely on the information provided by other plant parameter indications relating to vessel level.

A separate set (to that described above) of range level instrumentation provides reactor level control via the reactor feedwater system. This set also indicates or records in the control room. Additionally, an upset range (0-180 in.) and a shutdown range (0-400 in.) are provided for operator information.

The safety-related systems or functions served by safety-related reactor water level instrumentation are the following:

RCIC
HPCS
LPCS
RHR/LPCI
ADS
Nuclear steam supply shutoff system (NSSSS)
Reactor protection system (RPS)
Standby gas treatment system (SGTS)
Emergency power system
Secondary containment isolation
Main control room and critical switchgear HVAC
Standby service water system
Containment instrument air system
Trip of nonessential loads

Low reactor vessel water level is used in the initiation logic of all systems listed above. In addition, the RCIC and HPCS systems shut down on high reactor vessel water level. HPCS and RCIC will automatically restart if low reactor level is again reached (see response to TMI Items II.K.1.22 and II.K.3.13, respectively, for further discussion). Additional information about reactor vessel level instrumentation is also provided in Section 5.2 and in Figure 3.6-1.

This position has been accepted in the NRC Safety Evaluation Report, NUREG-0892, dated March 1982, section 7.5.2.1.

II.K.3.21 Restart of Core Spray and Low Pressure Coolant Injection Systems

Position

The core spray and low pressure coolant injection (LPCI) system flow may be stopped by the operator. These systems will not restart automatically on loss of water level if an initiation signal is still present. The core spray and LPCI system logic should be modified so that these systems will restart, if required, to assure adequate core cooling. Because this design modification affects several core cooling modes under accident conditions, a preliminary design should be submitted for staff review and approval prior to making the actual modification.

Clarification

Modification of system design should be made in accordance with those requirements set forth in Sections 4.12, 4.13, and 4.16 of IEEE Standard 279-1971 with regard to protective function bypasses and completion of protective action once initiated.

Columbia Generating Station Position

CGS as a participant in the BWR Owner's Group endorses the position presented in the letter dated December 29, 1980, from D. B. Waters to the NRC (attention D. G. Eisenhut), Subject: "BWR Owner's Group Evaluation of NUREG-0737 Requirements." The position presented in enclosure 2 to this letter concludes that the current system design is adequate and no design changes are required. CGS concurs in this position.

It should be noted that this design allows the operator to evaluate the plant and avoid an automatic restart that may have an adverse impact on the situation.

This position has been accepted in the NRC Safety Evaluation Report NUREG-0892, dated December 1982, section 7.3.2.1.

II.K.3.25 Effect of Loss of Alternating-Current Power on Pump Seals

Position

The licensees should determine, on a plant-specific basis, by analysis or experiment, the consequences of a loss of cooling water to the reactor recirculation pump seal coolers. The pump seals should be designed to withstand a complete loss of alternating-current (ac) power for at least 2 hours. Adequacy of the seal design should be demonstrated.

Clarification

The intent of this position is to prevent excessive loss of reactor coolant system (RCS) inventory following an anticipated operational occurrence. Loss of ac power for this case is construed to be loss of offsite power. If seal failure is the consequence of loss of cooling water to the reactor coolant pump (RCP) seal coolers for 2 hr, due to loss of offsite power, one acceptable solution would be to supply emergency power to the component cooling water pump. This topic is addressed for Babcock and Wilcox (B&W) reactors in Item II.K.2.16.

Columbia Generating Station Position

Columbia Generating Station, as a participant in the BWR Owners' Group, endorses the position developed by General Electric for the Owners' Group. This position has been transmitted in a letter from the BWR Owners' Group to the NRC, T. J. Dente to Darrell G. Eisenhut, dated September 21, 1981. In this supplement to the BWR Owners' Group evaluation of NUREG-0737, Item II.K.3.25, General Electric presented test data from a test performed at the Bingham Pump Company's test facility in 1973 on the CGS recirculation pump. During the operability testing of the pump at rated temperature and pressure the seal cavity was deprived of seal purge and the external heat exchanger was deprived of coolant. As a result, the seal cavity temperature exceeded 270°F. Test personnel visually monitored pump leakage for more than five hours and observed no leakage beyond the capability of the 1-in. seal drain lines, less than 5 gpm. These test results provide confirmation that loss of cooling to the Bingham pump seal for 5 hr does not lead to unacceptable seal leakage. This loss is easily compensated for by normal water level controls and presents no hazard to the health and safety of the public.

This position has been accepted in the NRC Safety Evaluation Report NUREG-0892, dated December 1982, section 15.1.2.

II.K.3.44 Adequate Core Cooling for Transients with a Single Failure

Position

For anticipated transients combined with the worst single failure and assuming proper operator actions, licensees should demonstrate that the core remains covered or provide analysis to show that no significant fuel damage results from core uncovery. Transients which result in a stuck-open relief valve should be included in this category (NUREG-0737).

Clarification

None.

Columbia Generating Station Position

CGS as a member of the BWR Owners' Group endorses the following position statement and analysis prepared by GE on behalf of the Owners' Group:

Introduction:

This report has been prepared as the BWR Owners' Group generic response to NUREG-0737 Task Item II.K.3.44 which addresses the issue of adequate core cooling for transients with a single failure for those plants identified in Table II.K.3.44-4.

At the outset it should be noted that the conditions described in II.K.3.44 (i.e., transients plus single failures) go beyond the current BWR design basis and that the item's reference to transients with multiple failures goes beyond the regulatory requirements as specified in Regulatory Guide 1.70, Revision 3. The multiple failures specified involve consideration of a stuck-open relief valve (SORV) combined with the worst single failure. GE and the Owners' Group continues to support the current BWR design basis approach. This report is intended to provide information to address Item II.K.3.44, but does not reflect our intention to change the current BWR design basis approach.

It is shown that, for the GE BWR/2 through BWR/6 plants, the core remains covered for any transient with the worst single failure. This is achieved without any operator action to manually initiate ECCS or other inventory makeup systems. The worst transient with the worst single failure is shown to be the loss of feedwater (LOF) event with a failure of the high pressure ECCS or one isolation condenser (IC) loop, whichever is applicable.

For the bounding LOF event, studies which included even more degraded conditions have been documented in Reference 1. The degraded conditions cover the failure of HPCS (or HPCI or FWCI or IC) and one SORV. Reference 1 shows that the core will remain covered and therefore that no fuel failure would occur.

Criteria, Scope and Assumptions:

NUREG-0737 Item II.K.3.44 requires that the licensees demonstrate adequate core cooling to prevent the fuel from incurring significant damage for the anticipated transients combined with the worst single failure. To meet this requirement, either one of the following two criteria should be satisfied:

a. The reactor core remains covered with water until stable conditions are achieved, or

b. No significant fuel damage results from core uncovery.

For BWR plants, this report will show that Criterion 1 is met. The report makes the following assumptions:

a. A representative plant of each BWR product line, BWR/2 through BWR/6, is used to represent all of the plants of that product line,

b. The anticipated transients as identified in NRC Regulatory Guide 1.70, Revision 3 were considered,

c. The single failure is interpreted as an active failure, and

d. All plant systems and components are assumed to function normally, unless identified as being failed.

Discussion:

Table II.K.3.44-1 lists all of the transients which were considered in this study. The event sequence of each transient was examined for each product line to determine the impact on core cooling. The following three factors were used to determine the worst transient and the worst single failure:

a. Reduction or loss of main feedwater or coolant makeup or heat removal systems, especially high pressure systems, e.g., HPCI, feedwater coolant injection (FWCI), HPCS, RCIC or isolation condenser (IC),

b. Steam release paths causing rapid reactor coolant inventory loss, e.g., SRVs, turbine, or turbine bypass valves, and

c. Power level, especially the timing of scram.

Based on these considerations, a comparison was made among the transients in Table II.K.3.44-1.

In Reference 2, the events of Table II.K.3.44-1 are compared in detail for a typical BWR/4 plant. In particular the impact on core cooling for each transient is evaluated by comparison to the analysis results for the LOF event in the section titled "Applicability of Analyses." It is found that the LOF event is the most severe transient from the core cooling viewpoint due to its rapid depletion of reactor coolant inventory. This conclusion has generic applicability to all BWR product lines covered by this study.

The same approach was also used to select the single failures which would pose the greatest challenge to core cooling. Among all of the possible failures considered (Table II.K.3.44-2 the following failures are identified as the most important ones:

a. Failure of HPCI or HPCS or FWCI or one IC loop, whichever is applicable,
b. Failure of RCIC, and
c. One of the SRVs, which has opened as a result of the transient, fails to close.

Items a and b are the possible limiting failures because they represent loss of high pressure inventory makeup or heat removal systems which would be relied on following a loss of feedwater event. Item c is a possible limiting failure, because it results in the largest steam release rate from the vessel compared to other possible release paths (e.g., a stuck-open turbine bypass valve). No other failures identified in Table II.K.3.44-2 result in a direct challenge to core cooling capability.

Because of the relatively low steam loss capacity through one SORV (Item c) compared to the makeup water capacity of the highest capacity makeup water system, the failure of the highest capacity high pressure makeup system (Item a) would be worse than a stuck-open relief valve (Item c). For example, for a typical BWR/4, representative values of HPCI makeup and SRV flow are 18% and 6% of rated feedwater flow, respectively. Because of the higher makeup rate of HPCI/HPCS relative to RCIC (3% of rated feedwater flow), Item a would be worse than Item b. Table II.K.3.44-3 lists the worst combination of transient and single failure for the GE BWR product lines covered by this study.

Even with the worst single failure in combination with the LOF event, the RCIC or at least one IC loop will function to provide makeup and/or to remove decay heat while the vessel pressure remains high. The design basis for the RCIC or the IC is such that they are capable of removing decay heat with the vessel being isolated. Analyses of the LOF event with the worst single failure have been performed to support this conclusion. For example, for BWR/2 plants, such analyses are documented in Reference 1, Table 3.2.1.1.5-5. These analyses show that the isolation condenser heat removal capacity is greater than the decay heat generation rate and will lead to a safe and stable condition. Similar analysis have been performed for representative plants with the RCIC system. These analyses show that for the worst transient

with the worst single failure, the minimum water level for different BWR product lines ranges from 6 ft to 11 ft above the top of the active fuel.

With even more degraded conditions, i.e., one SORV in addition to the worst case transient with the worst single failure, reference plant analyses in Reference 1, Tables 3.2.1.1.5-9 and 3.2.1.1.5-10 show that for the plants analyzed the RCIC system can automatically provide sufficient inventory to keep the core covered even with a single failure plus a SORV. This capability is not a design basis for the RCIC system, and not all plants have been analyzed to demonstrate this capability. If a plant should not have this capability, manual depressurization will avoid core uncovery for the case of LOF plus worst single failure plus SORV. It should be noted that manual depressurization is the proper operator action for all plants during loss of inventory conditions when the high pressure cooling system(s), are unable to restore and maintain RPV level. These proper operator actions are allowed for in the NUREG-0737 requirement.

For plants without RCIC, manual depressurization will avoid core uncovery for the case of LOF plus worst single failure plus SORV.

Conclusion:

The anticipated transients in NRC Regulatory Guide 1.70, Revision 3, were reviewed for all BWR product lines BWR/2 through BWR/6 from a core cooling viewpoint. The LOF event was identified to be the most limiting transient which would challenge core cooling. The BWR is designed so that the high pressure makeup or inventory maintenance systems or heat removal systems (HPCI, HPCS, FWCI, RCIC or IC) are independently capable of maintaining the water level above the top of the active fuel given a loss of feedwater. The detailed analyses show that even with the worst single failure in combination with the LOP event, the core remains covered.

Furthermore, even with more degraded conditions involving one SORV in addition to the worst transient with the worst single failure, studies show that the core remains covered during the whole course of the transient either due to RCIC operation or due to manual depressurization.

This position has been accepted in the NRC Safety Evaluation Report NUREG-0892, dated December 1982, section 15.1.2.

References:

1. Section 3.2.1 (prepublication form) of "Additional Information Required for NRC Staff Generic Report on Boiling Water Reactors," NEDO-24708, March 31, 1980.

2. Section 3.2.2 (prepublication form) of "Additional Information Required for NRC Staff Generic Report on Boiling Water Reactors," NEDO-24708, June 30, 1980.

3. Section 3.5.2.1 (prepublication form) of "Additional Information Required for NRC Staff Generic Report on Boiling Water Reactors," NEDO-24708, August 31, 1979.

Table II.K.3.44-1

Summary of Initiating Transients
(Reference: NRC Regulatory Guide 1.70, Revision 3)

1.	*Loss of feedwater heating*
2.	*Feedwater controller failure - maximum demand*
3.	*Pressure regulator failure - open*
4.	*Inadvertent safety/relief valve opening*
5.	*Inadvertent residual heat removal (RHR) shutdown cooling operation*
6.	*Pressure regulator failure - closed*
7.	*Generator load rejection*
8.	*Turbine trip*
9.	*Main steam isolation valve (MSIV) closure*
10.	*Loss of condenser vacuum*
11.	*Loss of normal ac power*
12.	*Loss of feedwater flow*
13.	*Failure of RHR shutdown cooling*
14.	*Recirculation pump trip*
15.	*Recirculation flow control failure - decreasing flow*
16.	*Rod withdrawal error*
17.	*Abnormal startup of idle recirculation pump*
18.	*Recirculation flow control failure - increasing flow*
19.	*Fuel loading error*
20.	*Inadvertent startup of high pressure core spray (HPCS) or high pressure coolant injection (HPCI) or feedwater coolant injection (FWCI) or isolation condenser (IC), whichever is applicable.*

Table II.K.3.44-2

List of Single Failures Which Can Potentially Degrade the Course of a BWR Transient

1. *One or all of the bypass valves fail to modulate open when required.*
2. *One of the bypass valves, which has opened as a result of the transient, fails to close.*
3. *Failure to trip the turbine or feedwater pumps on high water level.*
4. *One main steam isolation valve (MSIV) fails to close when required.*
5. *One of the safety/relief valves fails to open when required.*
6. *One of the safety/relief valves, which has opened as a result of the transient, fails to close.*
7. *Failure to trip one recirculation pump.*
8. *Failure to run back the recirculation pumps.*
9. *Failure of high pressure coolant injection (HPCI) or high pressure core spray (HPCS) or feedwater coolant injection (FWCI) or one isolation condenser (IC) loop, whichever is applicable.*
10. *Failure of reactor core isolation cooling (RCIC) or one IC loop, whichever is applicable.*
11. *Failure of one low pressure coolant injection (LPCI) loop or the low pressure core spray (LPCS) system.*
12. *Loss of one residual heat removal (RHR) system heat exchanger.*
13. *A single control rod stuck while the remainder of the control rods are moving.*
14. *Failure to achieve the rod block function (i.e., a single control rod will withdraw upon erroneous withdrawal demand).*
15. *Loss of one diesel generator if loss of ac power was the initiating event.*

Table II.K.3.44-3

Worst Case of Transient with a Single Failure for Different BWR Product Lines

Product Line	*Transient with a Single Failure (Worst Case)*
BWR/2	*LOF + Failure of one IC loop (Oyster Creek only)* *LOF + Failure of FWCI (Nine Mile Point only)*
BWR/3	*LOF + Failure of FWCI (Millstone only)* *LOF + Failure of HPCI (others)*
BWR/4	*LOF + Failure of HPCI*
BWR/5	*LOF + Failure of HPCS*
BWR/6	*LOF + Failure of HPCS*

Table II.K.3.44-4

Participating Utilities[a]
NUREG-0737

Boston Edison	*Pilgrim 1*
Caroline Power & Light	*Brunswick 1 and 2*
Commonwealth Edison	*LaSalle 1 and 2, Dresden 1-3, Quad Cities 1 and 2*
Georgia Power	*Hatch 1 and 2*
Iowa Electric Light & Power	*Duane Arnold*
Jersey Central Power & Light	*Oyster Creek 1*
Niagara Mohawk Power	*Nine Mile Point 1 and 2*
Nebraska Public Power District	*Cooper*
Northeast Utilities	*Millstone 1*
Philadelphia Electric	*Peach Bottom 2 and 3; Limerick 1 and 2*
Power Authority of the State of New York	*FitzPatrick*
Tennessee Valley Authority	*Browns Ferry 1-3; Hartsville 1-4, Phipps Bend 1 and 2*
Vermont Yankee Nuclear Power	*Vermont Yankee*
Detroit Edison	*Enrico Fermi 2*
Mississippi Power & Light	*Grand Gulf 1 and 2*
Pennsylvania Power & Light	*Susquehanna 1 and 2*
Energy Northwest	*Columbia Generating Station*
Cleveland Electric Illuminating	*Perry 1 and 2*
Houston Lighting & Power	*Allens Creek*
Illinois Power	*Clinton Station 1 and 2*
Public Service of Oklahoma	*Black Fox 1 and 2*
Long Island Lighting	*Shoreham*

[a] *Report applies to plants included herein whose owners participated in the report development.*

II.K.3.45 Evaluation of Depressurization with Other than Automatic Depressurization System

Position

Analyses to support depressurization modes other than full actuation of the ADS (e.g., early blowdown with one or two SRVs) should be provided. Slower depressurization would reduce the possibility of exceeding vessel integrity limits by rapid cooldown (NUREG-0737).

Clarification

None.

Columbia Generating Station Position

CGS as a member of the BWR Owners' Group endorses the following position statement and analysis prepared by GE on behalf of the Owners' Group.

The evaluation of alternate modes of depressurization other than full actuation of the Automatic Depressurization System (ADS) is made for those plants listed in Table II.K.3.45-5 with regard to the effect of such reduced depressurization rates on core cooling and vessel integrity.

Depressurization by full ADS actuation constitutes a depressurization from about 1050 psig to 180 psig in approximately 3.3 minutes. Such an event, which is not expected to occur more than once in the lifetime of the plant, is well within the design basis of the reactor pressure vessel. This conclusion is based on the analysis of several transients requiring depressurization via the ADS valves. Results of these analyses indicate that the total vessel fatigue usage is less than 1.0. Therefore, no change in the depressurization rate is necessary. However, to comply with the above request reduced depressurization rates were analyzed and compared with the full ADS actuation. The alternate modes considered cause vessel pressure to traverse the same pressure range in (1) depressurization case 1 (ranges from 6-10 minutes depending on plant size and ADS capacity), and (2) depressurization case 2 (ranges from 15-20 minutes). The case 2 depressurization bounds the possible increase in depressurization time by producing an undesirably long core uncovered time. The case 1 depressurization gives the results of an intermediate depressurization. These modes are achieved by opening a reduced number of relief valves. These blowdown rates are illustrated by Figure II.K.3.45-1.

Assumptions:

The major assumptions used for the core cooling analysis are as follows:

a. No high pressure cooling systems are available,

b. All low pressure ECCS is available, and

c. Assumptions as stated in NEDO-24708, Section 3.1.1.3, "Justification of Analysis Methods," which includes the use of 1978 ANS Decay Heat (mean value).

Results:

a. Vessel Integrity

The depressurization events considered are full ADS blowdown and blowdown over 10 and 20 minute intervals. The reactor vessel stresses for these events are within the acceptance stress limits defined by ASME Code Section III for emergency conditions (Level C). The core support structures and other safety-related internal components are also within applicable emergency condition stress limits.

The ADS operating conditions which affect fatigue usage of vessel or core support structures are not significantly different for fast and slow blowdown events. Specific calculations of fatigue usage are not required for emergency conditions (Level C). However, available pressure vessel fatigue analyses show the usage per event to be < 0.1 per full ADS event.

In summary, reactor vessel and core support structure integrity is assured for the blowdown rates considered if an ADS event should occur, and reduced rates of depressurization do not significantly decrease fatigue usage.

b. Core Cooling Capability

Examination of the reduced depressurization rates under consideration with respect to core cooling concerns shows that:

1. Vessel depressurization for a case 2 blowdown (15-20 minutes) causes the core to be uncovered for a lengthy period of time even assuming system initiation at the earliest reasonable time.

2. *Vessel depressurization for a case 1 blowdown (6-10 minutes), when actuated at the same level as the full ADS case, will result in less vessel inventory* at *the time of ECCS injection and can result in longer periods of core uncovery.*

3. *Vessel depressurization for a case 1 blowdown (6-10 minutes) when actuated considerably earlier than at the ADS initiation setpoint can result in some improvement in core cooling. However, the operator is required to act more quickly in these cases (i.e., within 1-6 minutes after the accident). This earlier depressurization also reduces the time available to start high pressure system injection and hence to avoid the need for manual depressurization. It also increases the frequency of depressurization.*

The results of the calculations are presented in Tables II.K.3.45-1 through II.K.3.45-4. They show the total core uncovered time and remaining vessel inventory at the time of low pressure ECCS injection. A discussion of these results follows below.

Discussion:

The results are based upon calculations performed with the assumptions stated earlier using a representative BWR/3 and a BWR/6 to show consistency of results across the product lines. The transients considered are an outside steam line break and a stuck-open relief valve. The ADS will depressurize the vessel to the low pressure ECCS injection setpoint when no high pressure cooling systems are available. The depressurizations used are initiated at different times based on the downcomer water level. The first initiation time considered is when the water level is at the top of the active fuel which is consistent with the original design for most plants and thus is the basis for comparison. The second initiation time considered is the downcomer water level of 34 feet from the bottom of the vessel which still provides the operator with a reasonable time to attempt to start the high pressure systems. The last initiation time considered is the high pressure makeup system setpoint (Level 2 for BWR/6 and Level 1 for BWR/3) plus 60 seconds which is the earliest time in which depressurization could be expected to occur.

The core cooling criteria used in assessing the impact of a reduced depressurization rate are:

a. *Inventory in the core and lower plenum at the time of low pressure ECCS injection as predicted by the SAFE model (Reference 1), and*

b. *The total time which the top of the active fuel (TAF) remains uncovered as predicted by the SAFE model (Reference 1).*

The first criterion demonstrates the increased mass loss due to boiloff for the longer blowdown, since mass loss due to flashing will be independent of the depressurization rate providing the boundary pressure values are the same for all the rates. The second criterion is a measure of the resultant core temperature.

Table II.K.3.45-1 gives the results for a BWR/6 assuming an outside steam line break. As the length of depressurization is increased the vessel inventory at the time the ECCS injection decreases and the total core uncovered time increases. Table II.K.3.45-1 further shows that the actuation times based on higher water levels (i.e., 34 ft and Level 2 +60 sec) longer depressurizations exhibit the same trends. Furthermore, for any particular depressurization rate, raising the actuation level increases the vessel inventory at ECCS injection and decreases the total core uncovered time. However, this also decreases the time the operator has available to try to get high pressure level control systems working in order to avoid the need to depressurize.

Table II.K.3.45-2 shows that these same results are exhibited for the case of a stuck-open relief valve. Table II.K.3.45-3 shows the results for a BWR/3 assuming an outside steam line break. Examination of the table shows the same trends as Table II.K.3.45-1, and therefore the results are applicable to all product lines. Table II.K.3.45-4 shows that these general trends are independent of the models used by exhibiting the same trends for a BWR/3 using standard Appendix K licensing assumptions.

Conclusion:

The cases considered show that no appreciable improvement can be gained by a slower depressurization based on core cooling considerations. A significantly slower depressurization rate will result in increased core uncovered time. A moderate decrease in the depressurization rate necessitates an earlier actuation time resulting in less time available for operator action to start high pressure ECCS without significant benefit to vessel fatigue usage. This will also result in an increased frequency of ADS actuation.

Finally, it is of paramount importance to note that the ADS is not a normal core cooling system; it is a backup for high pressure cooling systems (feedwater, RCIC, HPCI/HPCS). If ADS operation is ever required in a BWR, it will be because core cooling is threatened. Since a full ADS blowdown is well within the design basis of the reactor pressure vessel and ADS is properly designed to minimize the threat to core cooling, no change in the depressurization rate is necessary.

Reference:

1. *NEDO-24708, "Additional Information Required for NRC Staff Generic Report on Boiling Water Reactors," August 1979.*

Table II.K.3.45-1

Results for BWR/6 Outside Steam Line Break
No High Pressure Systems Available

Depressurization Case	*Depressurization Initiation*		*Core Uncovered Time (sec)*	*Liquid Inventory in Core and Lower Plenum at Low Pressure ECCS Injection (lb)*
	Level	*Time (sec)*		
Full ADS	*TAF*[a]	*1086.0*	*26*	1.603×10^5
Case 1	*TAF*	*1086.0*	*117*	1.528×10^5
Case 1	*34'*	*610.6*	*10*	1.779×10^5
Full ADS	*Level 2*[b] *+60 sec*	*78.3*	*No uncovery*	1.993×10^5
Case 1	*Level 2 +60 sec*	*78.3*	*No uncovery*	1.937×10^5
Case 2	*Level 2*	*78.3*	*390*	1.755×10^5

[a] *Top of active fuel.*
[b] *High pressure initiation setpoint plus 60 sec.*

Table II.K.3.45-2

Results for BWR/6 Stuck-Open Relief Valve
No High Pressure Systems Available

Depressurization Case	*Depressurization Initiation*		*Core Uncovered Time (sec)*	*Liquid Inventory in Core and Lower Plenum at Low Pressure ECCS Injection (lb)*
	Level	*Time (sec)*		
Full ADS	*TAF*[a]	*642.6*	*No uncovery*	1.836×10^5
Case 1	*TAF*	*642.6*	*15*	1.787×10^5
Case 1	*34'*	*391.8*	*No uncovery*	1.889×10^5
Case 1	*Level 2*[b] *+60 sec*	*77.7*	*No uncovery*	1.961×10^5

[a] *Top of active fuel.*
[b] *High pressure initiation setpoint plus 60 sec.*

Table II.K.3.45-3

Results for BWR/3 Outside Steam Line Break
No High Pressure Systems Available

Depressurization Case	*Depressurization Initiation*		*Core Uncovered Time (sec)*	*Liquid Inventory in Core and Lower Plenum at Low Pressure ECCS Injection (lb)*
	Level	*Time (sec)*		
Full ADS	*TAF*[a]	*1527.8*	*155*	2.027×10^5
Case 1	*TAF*	*1527.8*	*170*	1.975×10^5
Case 1	*34'*	*701.6*	*51*	2.291×10^5
Full ADS	*Level 1*[b] *+60 sec*	*364.4*	*No uncovery*	2.446×10^5
Case 1	*Level 1 +60 sec*	*364.4*	*10*	2.394×10^5

[a] *Top of active fuel.*
[b] *High pressure initiation setpoint plus 60 sec.*

Table II.K.3.45-4

Results for BWR/3 Outside Steam Line Break on Appendix K Assumptions with No High Pressure Systems

Depressurization Case	*Depressurization Initiation*		*Core Uncovered Time (sec)*	*Liquid Inventory in Core and Lower Plenum at Low Pressure ECCS Injection (lb)*
	Level	*Time (sec)*		
Full ADS	*TAF*[a]	*759.4*	*264*	*1.960×10^5*
Case 1	*TAF*	*759.4*	*277*	*1.913×10^5*
Full ADS	*Level l*[b] *+60 sec*	*145.6*	*175*	*2.210×10^5*
Case 1	*Level 1 +60 sec*	*145.6*	*191*	*2.165×10^5*

[a] *Top of active fuel.*
[b] *High pressure initiation setpoint plus 60 sec.*

Table II.K.3.45-5

Participating Utilities [a]
NUREG-0737

Boston Edison	*Pilgrim 1*
Caroline Power & Light	*Brunswick 1 and*
Commonwealth Edison	*LaSalle 1 and Dresden 2 and Quad Cities 1and 2*
Georgia Power	*Hatch 1 and 2*
Iowa Electric Light & Power	*Duane Arnold*
Jersey Central Power & Light	*Oyster Creek 1*
Niagara Mohawk Power	*Nine Mile Point 1 and 2*
Nebraska Public Power District	*Cooper*
Northeast Utilities	*Millstone 1*
Northern States Power	*Monticello*
Philadelphia Electric	*Peach Bottom 2 and 3; Limerick 1 and 2*
Power Authority of the State of New York	*FitzPatrick*
Tennessee Valley Authority	*Browns Ferry 1-3; Hartsville1-4, Phipps Bend 1 and 2*
Vermont Yankee Nuclear Power	*Vermont Yankee*
Detroit Edison	*Enrico Fermi 2*
Long Island Lighting	*Shoreham*
Mississippi Power & Light	*Grand Gulf 1 and 2*
Pennsylvania Power & Light	*Susquehanna 1 and 2*
Energy Northwest	*Columbia Generating Station*
Cleveland Electric Illuminating	*Perry 1 and 2*
Houston Lighting & Power	*Allens Creek*
Illinois Power	*Clinton Station 1and 2*
Public Service of Oklahoma	*Black Fox 1 and 2*

[a] *Report applies to plants included herein whose owners participated in the report development.*

II.K.3.46 Response to List of Concerns from ACRS Consultant (Michelson Concerns)

Position

General Electric should provide a response to the Michelson concerns as they relate to BWRs. See NUREG-0660, Appendix C, Table c.3, Item 46 (Reference 1) and NUREG-0626, Section 4, Item A.17 (Reference 6c).

Clarification

None.

Columbia Generating Station Position

GE, acting for the BWR Owners' Group, responding to these concerns in a letter, "Response to Questions Posed by Mr. C. Michelson," R. H. Buchholz (GE) to D. F. Ross, dated February 21, 1980. Submittal of this letter completes the action required by this task.

This position has been accepted in the NRC Safety Evaluation Report NUREG-0892, dated December 1982, Section 6.3.6.

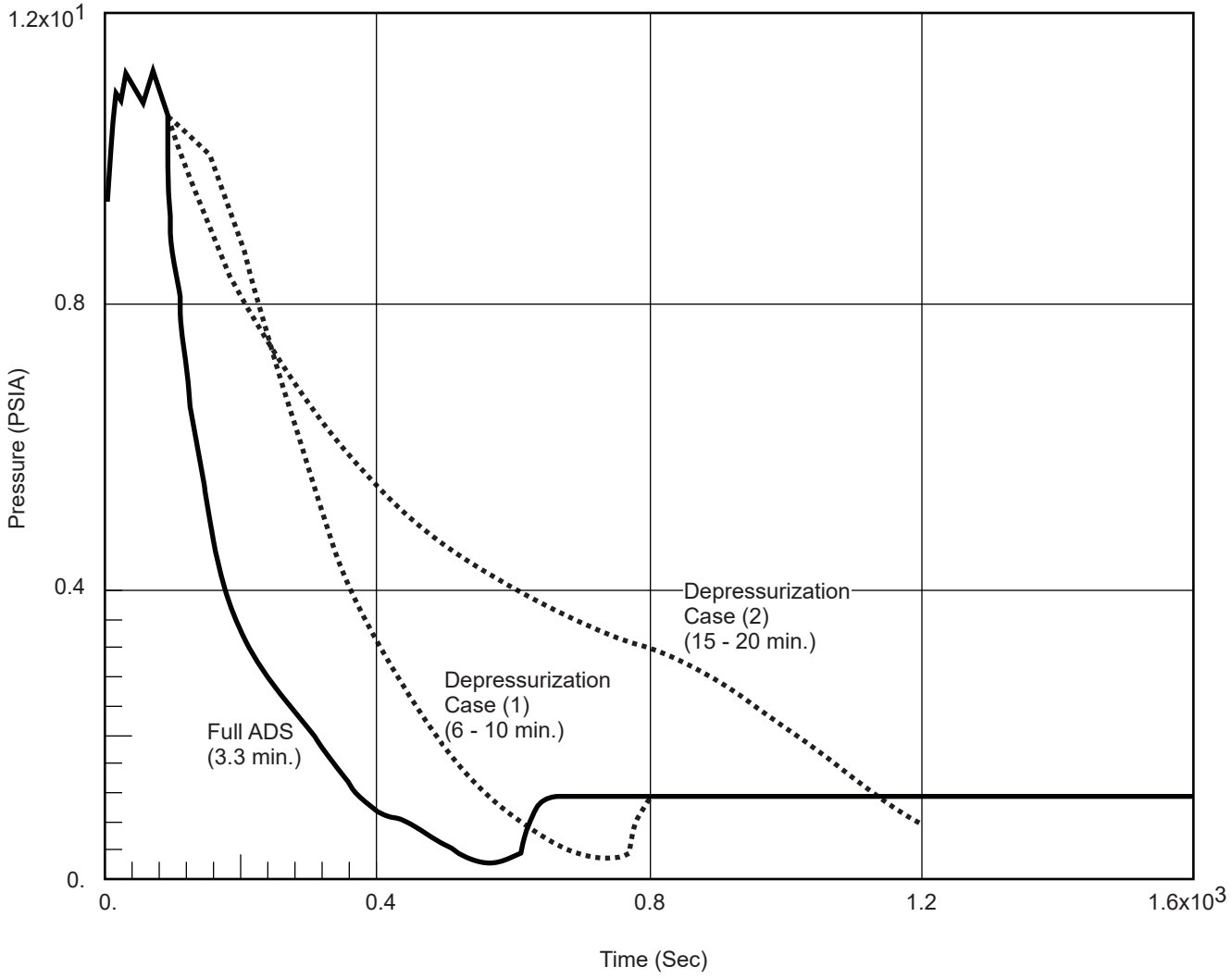

Columbia Generating Station **Final Safety Analysis Report**	**Vessel Blowdown Rates Used in Analysis**		
	Draw. No. **990578.72**	Rev.	Figure **II.K.3.45-1**

III.D.1.1 Primary Coolant Sources Outside Containment

Position (Full Power License Requirement)

Applicants shall implement a program to reduce leakage from systems outside containment that would or could contain highly radioactive fluids during a serious transient or accident to as-low-as-practical levels. This program shall include the following:

a. Immediate Leak Reduction

1. Implement all practical leak reduction measures for all systems that could carry radioactive fluid outside of containment.

2. Measure actual leakage rates with system in operation and report them to the NRC.

b. Continuing Leak Reduction

1. Establish and implement a program of preventive maintenance to reduce leakage to as-low-as-practical levels. This program shall include periodic integrated leak tests at intervals not to exceed each refueling cycle.

Dated Requirement

Applicants shall submit the information requested in the "Clarification" section of this position at least 4 months prior to issuance of a fuel-loading license.

This requirement shall be implemented by applicants for operating license prior to issuance of a full-power license. See NUREG-0737, Section III.D.1.1.

Clarification

Applicants shall provide a summary description, together with initial leak-test results, of their program to reduce leakage from systems outside containment that would or could contain primary coolant or other highly radioactive fluids or gases during or following a serious transient or accident.

a. Systems that should be leak tested are as follows (any other plant system which has similar functions or postaccident characteristics even though not specified herein, should be included):

- Residual heat removal (RHR),

- Containment spray recirculation,
- High pressure injection recirculation,
- Containment and primary coolant sampling,
- Reactor core isolation cooling,
- Makeup and letdown (PWRs only),
- Waste gas (includes headers and cover gas system outside of containment in addition to decay or storage system).

Include a list of systems containing radioactive materials which are excluded from program and provide justification for exclusion.

b. Testing of gaseous systems should include helium leak detection or equivalent testing methods.

c. Should consider program to reduce leakage potential release paths due to design and operator deficiencies as discussed in our letter to all operating nuclear power plants regarding North Anna and related incidents, dated October 17, 1979.

This requirement applies to all operating license applicants.

Columbia Generating Station Position

Columbia Generating Station has performed a systems design review and established criteria for a surveillance/preventive maintenance program to limit to as-low-as-practical, leakage from systems outside containment which could transport highly radioactive fluids during a serious transient or accident.

a. Systems Review

The systems for leak paths for primary coolant outside containment showed three potentially unisolated leak paths which could contain highly radioactive fluids during a serious accident or transient. These three leak paths originate at the reactor building sumps with a transport pathway to the waste collection tanks in the radwaste building. The three leak path lines have been addressed in a licensing technical change. Dual auto-isolation valves have been added to each of the three lines along with accompanying isolation logic.

b. Leakage Monitoring

A leakage surveillance and preventive maintenance program* for those systems within secondary containment which could transport highly radioactive fluids in the case of a serious reactor transient or accident has the following features.

1. Designation of systems included within the leakage surveillance and preventive maintenance program:

   (a) Residual Heat Removal,
   (b) Reactor Core Isolation Cooling,
   (c) High Pressure Core Spray,
   (d) Low Pressure Core Spray,
   (e) Primary Containment Atmospheric Control,
   (f) Primary Containment Atmospheric Monitoring,
   (g) Post Accident Sampling.

2. A system list which identifies the components to be inspected, the method of inspection or measurement, and the surveillance frequency.

3. Routine inspections by operators of visually accessible portions of designated systems during normal operating conditions or test mode.

4. Detailed leakage inspection and measurement defined for designated systems during initial test program and thereafter.

5. An aggressive preventive maintenance program with high priority assigned to leakage-related work or designated systems.

6. A review cycle for leakage-related work requests to evaluate possible modifications to keep leakage as low as is reasonably achievable.

III.D.3.3 Improved Inplant Iodine Instrumentation Under Accident Conditions

Position (NUREG-0737)

a. Each licensee shall provide equipment and associated training and procedures for accurately determining the airborne iodine concentration in areas within the facility where plant personnel may be present during an accident.

* This program takes exception for those systems which cannot be tested until startup due to required plant conditions. Program documentation will be available onsite for NRC I&E review.

b. Each applicant for a fuel-loading license to be issued prior to January 1, 1981 shall provide the equipment, training, and procedures necessary to accurately determine the presence of airborne radioiodine in areas within the plant where plant personnel may be present during an accident.

Clarification

Effective monitoring of increasing iodine levels in the buildings under accident conditions must include the use of portable instruments using sample media that will collect iodine selectively over xenon (e.g., silver ziolite) for the following reasons:

a. The physical size of the auxiliary and/or fuel handling building precludes locating stationary monitoring instrumentation at all areas where airborne iodine concentration data might be required.

b. Unanticipated isolated "hot spots" may occur in locations where no stationary monitoring instrumentation is located.

c. Unexpectedly high background radiation levels near stationary monitoring instrumentation after an accident may interfere with filter radiation readings.

d. The time required to retrieve samples after an accident may result in high personnel exposures if these filters are located in high-dose-rate areas.

After January 1, 1981, each applicant and licensee shall have the capability to remove the sampling cartridge to a low background, low contamination area for further analysis. Normally, counting rooms in auxiliary buildings will not have sufficiently low backgrounds for such analyses following an accident. In the low background area, the sample should first be purged of any entrapped noble gases using nitrogen gas or clean air free of noble gases. The licensee shall have the capability to measure accurately the iodine concentrations present on these samples under accident conditions. There should be sufficient samplers to sample all vital areas.

For applicants with fuel loading dates prior to January 1, 1981, provide by fuel loading (until January 1, 1981) the capability to accurately detect the presence of iodine in the region of interest following an accident. This can be accomplished by using a portable or cart-mounted iodine sampler with attached single-channel analyzer (SCA). The SCA window should be calibrated to the 365 KeV of Iodine-131 using the SCA. This will give an initial conservative estimate of presence of iodine and can be used to determine if respiratory protection is required. Care must be taken to assure that the counting system is not saturated as a result of too much activity collected on the sampling cartridge.

Columbia Generating Station Position

This italicized information is historical and was provided to support the application for an operating license. The FSAR contains descriptions for this instrumentation in the following sections: 7.5.2.2.3, 12.3.4.2, 12.3.4.4, 12.5.2.1, 12.5.3.5, and Emergency Plan Section 8.7.5.

Columbia Generating Station is responding to this position as follows: Four fixed, one mobile continuous air monitoring system, and one movable local alarming continuous air monitor are provided for air sampling in plant areas where personnel may be present during accident conditions. In addition, 10 low volume air sampling systems will be strategically located throughout the plant in frequently occupied areas to continuously draw air samples for subsequent analysis.

Grab samples will be obtained using varying volume air samplers that are both ac and dc powered.

Movable local alarming continuous air monitors are placed at predetermined plant locations for personnel protection and to substantiate the quality of the plant breathing atmosphere. These monitors have local readouts (charts) and radioiodine sampling capabilities.

Energy Northwest is currently using activated charcoal cartridges for radioiodine analysis and is evaluating the attributes of silver zeolite. On completion of a satisfactory evaluation Energy Northwest will, where applicable, incorporate silver zeolite into its air sampling program. The charcoal cartridges are used in conjunction with a Ge (Li) gamma spectroscopy system located in a low background, low contamination area such as the radiochemistry lab in the near site facility. Prior to analysis, cartridges are purged in a fume hood using plant air, instrument air, bottled air, or bottled nitrogen which is stored onsite.

Station procedures are provided for obtaining and evaluating both routine and non-routine air samples. In addition to initial training provided for Health Physics/Chemistry personnel, periodic drills are conducted in accordance with the Emergency Plan.

This position has been accepted in the NRC Safety Evaluation Report, NUREG-0892, dated December 1982, Section 12.5.2.

Appendix F

FIRE PROTECTION EVALUATION

TABLE OF CONTENTS

Section — Page

F.1 INTRODUCTION F.1-1
F.1.1 FIRE PROTECTION PROGRAM F.1-2
F.1.2 BACKGROUND F.1-3

F.2 FIRE PROTECTION SYSTEMS F.2-1
F.2.1 APPLICABLE INDUSTRY STANDARDS F.2-2
F.2.2 FIRE RESISTIVE CONSTRUCTION F.2-3
F.2.2.1 Fire Area Boundary Features F.2-4
F.2.2.2 Raceway Fire Barriers F.2-5
F.2.2.3 Fireproof Coatings F.2-5
F.2.2.4 Electrical Separation Barriers F.2-6
F.2.2.5 Reactor Building F.2-6
F.2.2.6 Radwaste/Control Building F.2-7
F.2.2.7 Turbine Generator Building F.2-7
F.2.2.8 Diesel Generator Building F.2-8
F.2.2.9 Standby Service Water Pump Houses No. 1A and 1B F.2-9
F.2.2.10 Service Building F.2-9
F.2.2.11 Circulating Water Pump House and Chlorination Building F.2-9
F.2.2.12 Cooling Towers F.2-9
F.2.2.13 Water Filtration Building 33 ..... F.2-9
F.2.2.14 North Yard Transformers F.2-9
F.2.2.15 Technical Support Center F.2-9
F.2.2.16 Alternate Health Physics Building F.2-9
F.2.2.17 Reactor Recirculation Pump Adjustable Speed Drive Building F.2-10
F.2.3 FIRE DETECTION AND ALARM SYSTEMS F.2-10
F.2.4 FIRE SUPPRESSION SYSTEMS F.2-11
F.2.4.1 Fire Protection Water Supplies F.2-12
F.2.4.2 Wet Pipe Sprinkler Systems F.2-14
F.2.4.3 Preaction Sprinkler Systems F.2-15
F.2.4.4 Deluge Water Spray Systems F.2-15
F.2.4.5 Carbon Dioxide Fire Suppression Systems F.2-16
F.2.4.6 Halon 1301 Fire Suppression Systems F.2-17
F.2.4.7 Dry Chemical Fire Suppression Systems F.2-17

Appendix F

FIRE PROTECTION EVALUATION

TABLE OF CONTENTS (Continued)

Section — Page

F.2.5 MANUAL FIRE FIGHTING EQUIPMENT F.2-17
F.2.5.1 Protective Clothing and Self-Contained Breathing Apparatus F.2-17
F.2.5.2 Yard Fire Hydrants and Hydrant Hose Equipment F.2-18
F.2.5.3 Standpipes, Hose, and Foam Carts F.2-18
F.2.5.4 Portable Extinguishers F.2-18
F.2.5.5 Smoke Removal F.2-18
F.2.6 OPERATOR ACTION EQUIPMENT F.2-19
F.2.6.1 Emergency Lighting F.2-19
F.2.6.2 Emergency Communications F.2-19
F.2.7 INSPECTION AND TESTING F.2-19

F.3 COMPLIANCE WITH FIRE PROTECTION REGULATORY DOCUMENTS F.3-1

F.4 FIRE HAZARDS ANALYSIS F.4-1
F.4.1 PLANT FIRE AREA ARRANGEMENT F.4-1
F.4.2 DESIGN BASIS FIRE F.4-2
F.4.2.1 Combustible Loading Assumptions F.4-2
F.4.2.2 Combustible Loading Calculations Methodology F.4-3
F.4.2.3 Fire Protection Engineering Evaluations F.4-4
F.4.3 POST-FIRE SAFE SHUTDOWN F.4-4
F.4.3.1 Normal Post-Fire Safe Shutdown Equipment F.4-9
F.4.3.2 Remote Post-Fire Safe Shutdown Equipment F.4-10
F.4.4 FIRE AREA ANALYSES F.4-11
F.4.4.1 Post-Fire Safe Shutdown F.4-11
F.4.4.2 Control of Radioactive Release F.4-12
F.4.4.3 Scope of Areas Evaluated in Fire Hazards Analysis F.4-21
F.4.4.4 Detailed Fire Hazards Analysis by Fire Area F.4-27
Fire Area DG-1 ..... F.4-27
Fire Area DG-2 ..... F.4-30
Fire Area DG-3 ..... F.4-33
Fire Area DG-4 ..... F.4-36
Fire Area DG-5 ..... F.4-39
Fire Area DG-6 ..... F.4-42
Fire Area DG-7 ..... F.4-45

Appendix F

FIRE PROTECTION EVALUATION

TABLE OF CONTENTS (Continued)

Section Page

Fire Area DG-8 ..... F.4-48
Fire Area DG-9 ..... F.4-51
Fire Area DG-10 ..... F.4-54
Fire Area R-1 ..... F.4-56
Fire Area R-2 ..... F.4-64
Fire Area R-3 ..... F.4-67
Fire Area R-4 ..... F.4-70
Fire Area R-5 ..... F.4-73
Fire Area R-6 ..... F.4-76
Fire Area R-7 ..... F.4-79
Fire Area R-8 ..... F.4-82
Fire Area R-9 ..... F.4-85
Fire Area R-10 ..... F.4-87
Fire Area R-11 ..... F.4-89
Fire Area R-12 ..... F.4-91
Fire Area R-15 ..... F.4-93
Fire Area R-18 ..... F.4-95
Fire Area R-21 ..... F.4-97
Fire Area M-9 ..... F.4-99
Fire Area M-21 ..... F.4-102
Fire Area M-27 ..... F.4-105
Fire Area RC-1 ..... F.4-111
Fire Area RC-2 ..... F.4-115
Fire Area RC-3 ..... F.4-118
Fire Area RC-4 ..... F.4-121
Fire Area RC-5 ..... F.4-124
Fire Area RC-6 ..... F.4-127
Fire Area RC-7 ..... F.4-129
Fire Area RC-8 ..... F.4-132
Fire Area RC-9 ..... F.4-134
Fire Area RC-10 ..... F.4-137
Fire Area RC-11 ..... F.4-140
Fire Area RC-12 ..... F.4-143
Fire Area RC-13 ..... F.4-146

Appendix F

FIRE PROTECTION EVALUATION

TABLE OF CONTENTS (Continued)

Section Page

Fire Area RC-14 ..... F.4-149
Fire Area RC-15 ..... F.4-152
Fire Area RC-16 ..... F.4-154
Fire Area RC-17 ..... F.4-156
Fire Area RC-18 ..... F.4-158
Fire Area RC-19 ..... F.4-160
Fire Area RC-20 ..... F.4-162
Fire Area SW-1 ..... F.4-165
Fire Area SW-2 ..... F.4-167
Fire Area TG-1 ..... F.4-169
Fire Area TG-3 ..... F.4-180
Fire Area TG-4 ..... F.4-182
Fire Area TG-6 ..... F.4-184
Fire Area TG-8 ..... F.4-187
Fire Area ASD F.4-189

F.5 ESSENTIAL FIRE PROTECTION SYSTEM OPERABILITY/TESTING PROGRAM F.5-1

F.6 FIRE PROTECTION ARRANGEMENT DRAWINGS F.6-1

F.7 FIRE PROTECTION PROGRAM REFERENCES F.7-1
F.7.1 REGULATORY DOCUMENTS/OTHER FSAR FIRE PROTECTION COMMITMENTS F.7-1
F.7.1.1 Columbia Generating Station Regulatory Requirements F.7-1
F.7.1.2 Columbia Generating Station Commitments F.7-1
F.7.2 INDUSTRY GUIDANCE F.7-2
F.7.3 CALCULATIONS/TECHNICAL MEMOS F.7-4
F.7.4 APPLICABLE NRC SAFETY EVALUATION REPORTS F.7-5
F.7.5 OTHER MISCELLANEOUS F.7-6
F.7.6 FIRE PROTECTION ENGINEERING EVALUATIONS F.7-8
F.7.7 FIRE PROTECTION REFERENCE DRAWINGS F.7-9
F.7.8 FIRE PROTECTION PROGRAM IMPLEMENTING PROCEDURES F.7-10

Appendix F

FIRE PROTECTION EVALUATION

LIST OF TABLES

Number	Title	Page
F.2-1	Code Deviations	F.2-21
F.3-1	Comparison with BTP 9.5-1 Appendix A	F.3-3
F.3-2	Comparison with the Specific Commitments to 10 CFR 50 Appendix R	F.3-58
F.4-1	Required Post-Fire Safe Shutdown (PFSS) Equipment	F.4-15

Appendix F

FIRE PROTECTION EVALUATION

LIST OF FIGURES

Number	Title
F.6-1	Fire Area Boundary Plan - Ground Floor
F.6-2	Fire Area Boundary Plan - Mezzanine Floors
F.6-3	Fire Area Boundary Plan - Operating Floors
F.6-4	Fire Area Boundary Plan - Reactor Building Miscellaneous Elevations
F.6-5	Fire Area Boundary Plan - Miscellaneous Floors and Buildings
F.6-6	Zones of Limited Combustibles - Reactor Building
F.6-7	Fire Suppression System Plan - Elevations 437 ft 0 in., 441 ft 0 in., and Miscellaneous Floors
F.6-8	Fire Suppression System Plan - Elevations 467 ft 0 in., 471 ft 0 in., and Miscellaneous Floors
F.6-9	Fire Suppression System Plan - Elevations 501 ft 0 in. to 525 ft 0 in.
F.6-10	Fire Suppression System Plan - Reactor Building Miscellaneous Elevations
F.6-11	Fire Suppression System Plan - Miscellaneous Floors and Buildings
F.6-12	Post-Fire Safe Shutdown - Residual Heat Removal and Automatic Depressurization System Piping and Instrument Diagram
F.6-13	Post-Fire Safe Shutdown - Nuclear Boiler Instrumentation System Piping and Instrument Diagram
F.6-14	Post-Fire Safe Shutdown - Standby Service Water System Piping and Instrument Diagram
F.6-15	Post-Fire Safe Shutdown - Radwaste Building Heating, Ventilating, and Air Conditioning Piping and Instrument Diagram

Appendix F

FIRE PROTECTION EVALUATION

LIST OF FIGURES (Continued)

Number	Title
F.6-16	Post-Fire Safe Shutdown - Reactor Building Heating, Ventilating, and Air Conditioning Piping and Instrument Diagram
F.6-17	Post-Fire Safe Shutdown - Standby Service Water Pumphouses and Diesel Generator Building Heating, Ventilating, and Air Conditioning Piping and Instrument Diagram
F.6-18	Access Egress for Post-Fire Safe Shutdown Activities – Ground, Mezzanine Floors
F.6-19	Access Egress for Post-Fire Safe Shutdown Activities - Operating Floor
F.6-20	Access Egress for Post-Fire Safe Shutdown Activities - Miscellaneous Reactor Building Floors
F.6-21	Fire Main Ring Header

Appendix F

FIRE PROTECTION EVALUATION

F.1 INTRODUCTION

The Fire Protection Evaluation summarizes the overall fire protection program (FPP) at Columbia Generating Station (CGS). The Fire Protection Evaluation describes those fire protection related organizational responsibilities, administrative and technical controls, fire suppression and detection systems, fire hazards analyses, and the post-fire safe shutdown methods, which comprise the FPP. Columbia Generating Station FPP performance goals include:

Defense-in-Depth

The CGS FPP uses the concept of defense-in-depth to achieve the required degree of reactor safety. This concept entails the use of echelons of administrative controls, fire protection systems and features, and post-fire safe-shutdown capability to achieve the following objectives:

a. Prevent fires from starting.
b. Detect rapidly, control, and extinguish promptly those fires that do occur.
c. Provide protection for structures, systems, and components (SSC) important to safety so that a fire that is not promptly extinguished by the fire suppression activities will not prevent the safe shutdown of the plant.

Safety-Related Structures, Systems, and Components

NRC General Design Criteria (GDC) 3 of Appendix A to 10 CFR Part 50 requires that the FPP protect SSCs important to safety from the effects of fire. However, the post-fire loss of function of systems used to mitigate the consequences of design-basis accidents does not per se impact public safety. The FPP must protect all equipment important to safety; however, the need to limit fire damage to systems required to achieve and maintain post-fire safe-shutdown conditions is greater than the need to limit fire damage to those systems required to mitigate the consequences of design-basis accidents.

Post-Fire Safe-Shutdown

The CGS FPP ensures that one success path of SSCs necessary for hot shutdown is free of fire damage. The reactor safety and performance goals for safe shutdown after a fire should ensure that the specified acceptable fuel design limits are not exceeded. Section III.L of Appendix R to 10 CFR Part 50 is followed for post-fire reactor safety and performance goals for alternate remote shutdown.

Prevention of Radiological Release

The CGS FPP demonstrates that the plant will maintain the ability to minimize the potential for radioactive releases to the environment in the event of a fire. Fires are treated as anticipated operational occurrences as defined in Appendix A to 10 CFR Part 50.

The CGS structures that must satisfy the FPP are those buildings designated as "Plant Areas" in references F.7.8.b through F.7.8.f procedures.

F.1.1 FIRE PROTECTION PROGRAM

The approved fire protection program and the changes thereto are contained in this Appendix of the FSAR except for certain other sections of the FSAR included in the Fire Protection Program by Reference F.7.1.

Appendix F is divided into seven sections. This first section contains background information on the development of the fire protection program.

Section F.2 contains a description of the plant fire protection systems. The codes and standards considered and used in the design of the systems are listed. Deviations from code design commitments are identified.

Section F.3 presents point-by-point comparisons of the plant fire protection program to the guidelines of Branch Technical Position (BTP) APCSB 9.5-1 Appendix A, and with the specific commitments to 10 CFR 50, Appendix R, Section III.

Section F.4 describes the methods used to implement the post-fire safe shutdown protection commitments to 10 CFR 50, Appendix R. The selection of the post-fire shutdown equipment and the circuit analysis methods are also described in Section F.4. The fire hazards analysis for each fire area describes the respective area, combustible loading, fire protection features which may be used to mitigate the consequences of a potential fire, and the methods used to ensure post-fire safe shutdown capability.

Section F.5 references Licensee Controlled Specifications (LCS) 1.10 that contain the fire protection system operational conditions, compensatory measures, and testing requirements for the essential portions of the fire protection systems.

Section F.6 contains the fire protection arrangement drawings and Section F.7 lists the references.

F.1.2 BACKGROUND

NRC General Design Criteria for Nuclear Power Plants, Appendix A of 10 CFR 50 establish the minimum requirements for the design of nuclear power plants. See FSAR Section 3.1.2.1.3 for the CGS comparison to GDC Criterion 3 for fire protection.

The construction permit for CGS was granted March 1973 and the design of the plant fire systems began in the following years. Section F.2.1 describes the code-of record edition of the committed fire codes followed for plant design. Section 1.2.2.12.11 provides a summary of the CGS fire protection systems.

Following the March 22, 1975 Browns Ferry Fire, BTP APCSB 9.5-1, Appendix A was issued. On September 30, 1976, Energy Northwest was requested to conduct an evaluation of the FPP at CGS using the guidelines in BTP APCSB 9.5-1 Appendix A. Since then, the comparison to BTP APCSB 9.5-1, Appendix A has been maintained current in FSAR Appendix F, Table F.3-1.

10 CFR 50, Appendix R and 10 CFR 50.48 became effective on February 17, 1981. 10 CFR 50, Appendix R added new expectations for the fire protection of safe shutdown capability, emergency lighting, and lubricating oil collection systems for non-inerted containment reactor coolant pumps. Appendix R, Sections III.G/L, III.J, and III.O are 10 CFR 50.48 requirements for plants licensed to operate prior to January 1, 1979. Columbia Generating Station received its operating license on December 20, 1983 and Appendix R is not an applicable regulation to CGS. In letter dated October 15, 1981, the NRC requested CGS submit a comparison to Appendix R that would be used as a guideline for review of fire protection requirements. In NRC Safety Evaluation Report (SER) dated March 1982 Section 9.5.1 indicated Energy Northwest agreed to conform to 10 CFR 50, Appendix R. The above paragraph discussion indicates Appendix R to 10 CFR 50 is a commitment for CGS and not an applicable regulatory requirement. Therefore, CGS is not an "Appendix R plant," but does maintain a comparison to all the sections of Appendix R as "commitments" in FSAR Table F.3-2. Deviations to 10 CFR 50, Appendix R are documented in Table F.3-2. A deviation to Appendix R, Sections III.G/L and III.J has a higher potential to impact the ability to achieve post-fire safe shutdown. Since CGS has an inerted primary containment, Appendix R, Section III.O is not applicable.

From 1982 to 1989, various NUREG-0892 NRC SERs for the CGS FPP were issued. Section F.7.4 lists the SERs for the CGS FPP. These SERs compared CGS to the Standard Review Plan BTP CMEB 9.5.1 (which includes the combined guidelines of BTP 9.5-1, Appendix A and 10 CFR 50, Appendix R).

Generic Letters 86-10 and 88-12 provided guidance on moving the fire protection Technical Specifications into the FSAR and adopting the standard fire protection license condition. Each of these changes was approved in SER dated May 25, 1989 and incorporated into Facility

Operating License (FOL) Amendment 67 (see Reference F.7.4.m). The fire protection system Technical Specifications was moved to FSAR F.5 but later moved to LCS 1.10.

Facility Operating License Amendment 67 modified FOL Condition 2.C.(14) such that the approved FPP (FSAR Amendment 39 and SERs) may be altered without prior NRC approval provided the change does not adversely impact the ability to achieve and maintain safe shut down in the event of fire. Based on the FOL Condition 2.C.(14) criteria and initial date of issuance, numerous FSAR changes have been made to Appendix F since FSAR Amendment 39. The FOL Condition 2.C.(14) "approved CGS FPP" is the current amendment of FSAR Appendix F and its referenced documents.

Based on the above, section F.7.1 lists the applicable FPP regulatory requirements and commitments.

F.2 FIRE PROTECTION SYSTEMS

Fire protection is provided through a combination of active and passive features which function to detect, contain, and suppress potential fires. These features include:

a. Fire resistive construction

b. Fire detection and alarm systems

c. Fire suppression systems

1. Fire water supply system
2. Deluge water spray systems
3. Wet pipe sprinkler systems
4. Preaction sprinkler systems
5. Carbon dioxide systems
6. Halon 1301 systems
7. Dry chemical suppression systems

d. Manual fire fighting equipment

1. Protective clothing and self-contained breathing apparatus (SCBA)
2. Yard fire hydrants
3. Standpipes, hose, and foam carts
4. Portable extinguishers
5. Smoke removal

e. Operator action equipment

1. Emergency lighting

2. Emergency communications

The design of the plant fire protection features is described below.

F.2.1 APPLICABLE INDUSTRY STANDARDS

The following industry standards are used, where applicable, in the design of the fire protection systems serving the reactor building, radwaste/control building, diesel generator building, turbine generator building, circulating water pump house, water filtration building 33, and transformer yard. Design-related differences between the installed plant configuration and industry standards are listed in Table F.2-1. See Section F.2.7 for inspection and testing.

a. NFPA 10 - 1975, Standard for Portable Fire Extinguishers;

b. NFPA 12 - 1973, Standard on Carbon Dioxide Extinguishing Systems;

c. NFPA 12A - 1973, Standard on Halogenated Fire Extinguishing Agent-Halon 1301;

d. NFPA 13 - 1975, Standard for the Installation of Sprinkler Systems;

e. NFPA 14 - 1974, Standard for the Installation of Standpipe and Hose Systems;

f. NFPA 15 - 1973, Standard for Water Spray Fixed Systems for Fire Protection;

g. NFPA 20 - 1974, Standard for the Installation of Centrifugal Fire Pumps;

h. NFPA 24 - 1973, Standard for Outside Protection;

i. NFPA 30 - 1973, Standard for Flammable and Combustible Liquids Code. See Table F.3-1 paragraph D.2.d for applicability;

j. NFPA 50A - 1973, Standard for Gaseous Hydrogen Systems at Consumer Sites. See Table F.3-1 paragraph D.2.b for applicability;

k. NFPA 70 - 1975, National Electric Code. Used for the design of electrical equipment and wiring for the main control room cabinet Halon 1301 systems and for wiring of the fire detection and alarm initiating devices;

l. NFPA 72A - 1975, Standard for the Installation, Maintenance and Use of Local Protective Signaling Systems for Watchman, Fire Alarm and Supervisory Service;

m. NFPA 72D - 1975, Standard for the Installation, Maintenance and Use of Proprietary Protective Signaling Systems for Guard, Fire Alarm, and Supervisory Service;

n. NFPA 72E - 1974, Standard for Automatic Fire Detectors;

o. NFPA 78 - 1975, Lightning Protection Code. See Table F.3-1 paragraph A.4 for applicability;

p. NFPA 80 - 1974, Standard for Fire Doors and Windows;

q. NEDO-10466-A, Power Generation Control Complex Design Criteria and Safety Evaluation. See Table F.3-1 paragraph E.4.a for applicability;

r. IEEE 383-1974, Standard for Type Test of Class 1E Electric Cables, Field Splices, and Connections for Nuclear Power Generating Stations. Where cable does not meet IEEE 383, NFPA 262-1990 or UL 910-1985 may be used. See Table F.3-1 paragraph D.3.f for further clarification;

s. Regulatory Guide 1.52, Revision 1, Design, Testing, and Maintenance Criteria for Atmosphere Cleanup System Air Filtration and Adsorption Units of Light-Water-Cooled Nuclear Power Plants. See Table F.3-1 paragraph D.4.d for applicability;

t. ANSI A21.4,-1974. See Table F.3-1 paragraph E.2.a for applicability;

u. NFPA 72-2013, National Fire Alarm and Signaling Code. See F.2.3 for applicability;

v. AMSE A.17.1 – 2010, Safety Code for Elevators. For Elevator Fire Protection Panel FP-CP-MT4; and

w. NFPA 72 – 2010, National Fire Alarm and Signaling Code. For Elevator Fire Protection Panel FP-CP-MT4.

Current editions of the above codes are used for modifications and additions to the plant fire protection systems when new facilities or systems are constructed or enhanced and defense-in-depth is warranted. In some cases, the guidance of more recent code editions may be followed which deviates from designs of the above code of record, without a corresponding Table F.2-1 discussion (when managed through administrative controls and maintained as a plant record).

F.2.2 FIRE RESISTIVE CONSTRUCTION

Fire barriers and fire resistive construction prevent the spread of fire from one location to another. Fire resistance is provided in building construction through the use of noncombustible structural materials. Rated fire barriers further isolate certain high hazard areas and provide additional separation for those systems needed for post-fire safe shutdown.

Essential fire rated assemblies are those fire area boundary features which separate fire areas with redundant post-fire safe shutdown equipment/cables or those fire areas containing redundant post-fire safe shutdown cables where one division is protected by raceway fire barriers. The overall category of fire rated assemblies (see LCS 1.10.5) can be broken into subcategories of fire area boundary features, raceway fire barriers, and fireproof coatings.

Figures F.6-1 through F.6-5 show the fire area boundaries, barrier hourly fire ratings, and barrier classifications. Reference F.7.7.o is the raceway fire barrier drawings.

F.2.2.1 Fire Area Boundary Features

Structural fire barriers may be provided by wall, floor, or ceiling assemblies. The fire rating of structural fire barriers is described in Section F.4 fire hazards analysis. A concrete wall with a thickness of 6 in. or greater provides a 3-hr rating. Based on the construction of masonry fire barriers, the fire rating may vary from 2 to 3 hr. The fire resistance rating for structures is determined using information from the NFPA Fire Protection Handbook, vendor data, industry fire resistance directories, and/or engineering evaluation. The containment fire barrier is not a standard 3-hr rated assembly but is adequate to prevent fire propagation.

Fire doors, fire dampers, and fire rated penetration seals are typically designed with a fire rating equivalent to that of the structural barrier in which they are installed. The 2-hr barriers may have 1.5-hr rated doors and dampers.

Fire doors are installed to the guidelines of NFPA 80 - 1974, with exceptions contained in Table F.2-1. Non-fire rated specialty doors (air lock, flood, radiation shield, and blast doors) located in fire barriers are installed based on equivalent door construction, as approved in Reference F.7.4.c.

Penetrations for ventilation systems through fire rated barriers are protected by fire dampers. Some plant areas have 1.5-hr rated fire dampers in 3-hr barriers, as approved by Reference F.7.4.a. Certain fire damper assemblies consist of a 3-hr listed fire door as the guillotine or trap door, installed in unlisted frames or supports. The construction and installation of the frames and supports is similar to listed assemblies. Although the design has not been fire tested and listed as a fire damper assembly, it was approved by Reference F.7.4.f. As approved in Reference F.7.4.l, fire dampers are not drop tested under air flow conditions since administrative controls are present to shut down ventilation on confirmation of a fire. All fire dampers in rooms containing safety-related equipment are qualified to Seismic Category I.

Conduit, piping, and cable penetrations are sealed where they pass through the barrier, except for some internal conduit seals where evaluation has shown no seal is required. Penetration seals provide a fire resistance equal to that of the barrier unless a fire protection evaluation has justified a lesser fire rating. Grouted penetrations are sealed with grout to the same thickness of the wall and are assumed not to degrade the rating of the penetrated fire barrier. The fire rating of nongrouted penetration seal designs is established by tests performed in accordance with Reference F.7.6.b. Qualification of fire-rated and pressure-rated penetration seals is contained in Reference F.7.6.a. Configuration control of penetration seals is maintained by Reference F.7.5.q.

The containment barrier and penetrations are nonstandard fire barriers not qualified by representative fire testing. See Section F.2.2.5 for more details.

F.2.2.2 Raceway Fire Barriers

Raceway fire barriers are used to prevent damage to designated circuits within a fire area in the event the redundant post-fire safe shutdown circuits are damaged by fire. Raceway fire barriers wraps are constructed of Darmatt KM-1, or 3M Interam E-50D/E54A.
Darmatt KM-1 raceway fire barriers are installed to 1 or 3-hr rated designs qualified by fire testing meeting Generic Letter 86-10 Supplement 1 acceptance criteria (Reference F.7.6.m).
3M Interam raceway fire barriers are installed to 3-hr rated designs qualified by fire testing meeting Generic Letter 86-10 acceptance criteria (Reference F.7.6.k). Structural steel supports and intervening steel members for raceway fire barriers are wrapped to the distance qualified by fire testing. Load bearing supports in 1-hr fire areas need not be protected to the structural barrier (Reference F.7.3.g). Reference F.7.4.f approved that unprotected commodities can be located above raceway fire barriers wraps.

A second category of raceway fire barriers is Whittaker mineral insulated (MI) fire rated cable. MI fire rated cable is 3-hr rated in Fire Areas R-1 and TG-1, and credited as 1-hr rated in Fire Area RC-3 (Reference F.7.6.j). In 3-hr areas, the MI fire rated cable is routed to ensure the fire induced collapse of unprotected items does not adversely affect cable operability (Reference F.7.7.o). The support designs limit the amount of zinc exposure and the potential for liquid metal embrittlement (Reference F.7.5.u and F.7.7.o).

F.2.2.3 Fireproof Coatings

Thermo-Lag 330-1 is used as a fire resistive coating on certain reactor building structural steel members supporting post-fire safe shutdown credited instrument tubing and tray support TS-5269 to protect Whittaker MI fire rated cable routed below (Reference F.7.6.l).

F.2.2.4 Electrical Separation Barriers

Electrical separation barriers are present throughout the plant to limit internally generated fire damage to nearby redundant safety-related systems. See Section 8.3.1.4 for more detail.

Plant building construction is further described below. The Section F.4.4.4 fire hazards analysis for each fire area has additional building construction and fire rating details.

F.2.2.5 Reactor Building

Exterior walls, floors, and ceilings are reinforced concrete from the top of the foundation mat to the refueling floor level. The minimum thickness of reinforced-concrete walls is 1 ft. From the refueling level to the top of the roof, the exterior walls are framed with structural steel and are enclosed with insulated metal wall panels. The reactor building is separated from other plant buildings by 3-hr fire rated reinforced-concrete walls and nonrated steel airtight doors. The building roof is a Factory Mutual Class I insulated steel roof deck.

Within the reactor building, Class 1E motor control centers are enclosed to provide separation from the general area hazards. Partial height concrete walls on the 471 ft, 501 ft, and 522 ft el. protect four Division 2 instrument racks. Fire barriers with nonrated steel flood doors separate the safety-related pump rooms below grade.

Primary containment is inerted during operation. There is no permanently installed fire protection equipment inside containment. Portable extinguishers and manual hoses are available for fire suppression when containment is deinerted for maintenance during plant outages.

The annular gap constructed between the metal shell and the primary containment vessel and the concrete biological shield wall, above 446 ft, is filled with a compressible insulating spacer system consisting of polyurethane flexible foam sheets butted at the joints and cemented directly to the primary containment shell, a jacket of premolded fiberglass reinforced polyester jacket panels, and epoxy flashing. The foam spacer is in a confined space, exposed to a minimal quantity of air through clearance around pipe penetrations. There is adequate spatial separation from the foam to the nearest combustible (electrical cable insulation) to reduce the possibility of a fire spreading into the foam liner. Mechanical penetrations within a 20-ft surface radius of Appendix R protected containment penetrations in Division 1 fire areas are 3-hr fire rated to ensure the combustible spacer/liner material does not ignite. Other containment mechanical penetrations have nonrated radiant energy refractory ceramic fiber seals. Fire spread in the annular gap would be very slow due to the limited space and oxygen deficient atmosphere. The metal vessel liner and the concrete bioshield wall would act as large heat sinks and further slow fire propagation. The use of refractory ceramic fiber seals was approved by Reference F.7.4.1.

Stair and elevator shafts in the reactor building are constructed of noncombustible reinforced concrete. Air locks are constructed of reinforced concrete with steel airtight doors.

F.2.2.6 Radwaste/Control Building

The vital island section of the building consists of reinforced-concrete walls, floors, and ceilings from the top of the foundation mat up to and including the roof slab. The radwaste sections of the building are constructed of reinforced-concrete walls, floors, and ceilings at the lower levels and structural steel framing with reinforced-concrete floors and enclosure walls on insulated metal wall panels at the upper levels. The building roof is Factory Mutual Class I insulated steel roof deck.

The main control room walls are 3-hr rated reinforced concrete.

The main control room contains steel enclosed power generation control complex (PGCC) units which are divisionally separated. Each unit consists of a false floor assembly, a vertical panel and/or benchboard panel, and a termination cabinet. All cables entering through the floor cable penetrations are sealed. The cables enter either directly into the false floor assembly to the control panels and terminate there or into an enclosed steel trough which extends to the termination cabinets. The remaining cables penetrating the control room floor behind the termination cabinets are compatible divisional cables routed in flexible metal conduit. Penetrations into the back of the panel assembly are fire stopped or sealed.

The remote shutdown room, the vital switchgear rooms and battery rooms, the reactor protection system rooms, and their respective mechanical equipment rooms are divisionally separated by 3-hr rated enclosures.

Stairs constructed of noncombustible material are enclosed in 2-hr minimum fire rated walls. The elevator is enclosed in a reinforced-concrete shaft.

From grade level 441 ft to 460 ft, the west wall facing the alternate health physics building is 3-hr rated.

F.2.2.7 Turbine Generator Building

The turbine building is separated from all other areas of the plant by noncombustible reinforced masonry block and/or concrete construction with hollow metal or steel doors. The building roof is a Factory Mutual Class I insulated steel roof deck.

The exterior walls of the turbine building are reinforced concrete or structural steel covered by insulated metal panels. Within the area, reinforced-concrete walls contain the turbine, feedwater heaters, and condenser. At the operating floor level, the reinforced-concrete walls isolating the turbine continue for a height of 23 ft 6 in. From the top of this wall, the structure

changes to structural steel covered with insulated metal panels up to the roof level. A section of the exterior north wall is also structural steel covered with insulated metal panels. Equipment access areas at the grade, mezzanine, and operating levels are contained with reinforced-concrete masonry units and insulated metal panels.

Rated fire barriers are provided to isolate high hazard areas:

a. The turbine generator lube oil conditioning system room (containing reservoir, separator, transfer pump, etc.) is located within 3-hr fire rated reinforced-concrete and masonry block walls. The oil cooler heads are open to the 501 ft floor level but is protected by deluge system 55;

b. The turbine generator lube oil storage tanks are located within 3-hr fire rated reinforced-concrete and masonry block walls and fire doors;

c. The auxiliary boiler room is separated from adjacent areas by 3-hr fire rated reinforced-concrete and masonry block walls;

d. The hydrogen seal oil room is separated from adjacent areas by 3-hr fire rated reinforced-concrete and masonry block walls;

e. The makeup water pump house transformer vaults are separated from adjacent areas by 3-hr fire rated reinforced-concrete and masonry block walls;

f. See Figures F.6-1 and F.6-2 for turbine building north wall facing transformer yard fire rating; and

g. From grade level 441 ft to 501 ft, the west wall facing the adjustable speed drive (ASD) building (Column D.3-H) is 3-hr fire rated.

Stairs of noncombustible material are enclosed in walls of 2-hr minimum rated construction. The elevator is enclosed in a reinforced-concrete shaft.

F.2.2.8 Diesel Generator Building

Exterior walls, floors, and ceilings are reinforced concrete of varying thicknesses from the top of the foundation mat to the roof. The building is divided into separate compartments by reinforced-concrete walls. The walls separating the diesel compartments and the walls separating the diesel generator building from adjacent plant buildings are 3-hr fire rated. The exterior walls of the building are nonrated.

F.2.2.9 Standby Service Water Pump Houses No. 1A and 1B

Exterior walls and roof are of nonrated reinforced-concrete construction. Floors are metal grating or reinforced concrete.

F.2.2.10 Service Building

The service building is separated from the turbine building and the reactor building by 3-hr rated reinforced-concrete walls.

F.2.2.11 Circulating Water Pump House and Chlorination Building

The building has a reinforced-concrete floor, insulated metal wall panels, and a metal roof deck over structural steel framing. The circulating water pump house and the chlorination sections of the building are separated by a reinforced-concrete masonry wall. The diesel fire pump fuel storage tank room is isolated by 2-hr rated walls.

F.2.2.12 Cooling Towers

The cooling towers are of noncombustible construction (except for fan shrouds, fan blades, fill material, and drift eliminators).

F.2.2.13 Water Filtration Building 33

The building has a reinforced-concrete floor, insulated metal wall panels, and metal roof deck over structural steel framing. All barriers are nonrated.

F.2.2.14 North Yard Transformers

The yard transformers are separated from the turbine building by 2-hr rated barriers and spatial separation. Fire barrier walls are installed between the main transformers E-TR-M1, E-TR-M2, E-TR-M3 and E-TR-M4. Other transformers are not separated by fire barriers.

F.2.2.15 Technical Support Center

The technical support center is separated from the radwaste building by 3-hr rated barriers.

F.2.2.16 Alternate Health Physics Building

The alternate health physics building is separated from the radwaste building and turbine building by 3-hr rated barriers.

F.2.2.17 Reactor Recirculation Pump Adjustable Speed Drive Building

The reactor recirculation (RRC) pump ASD building has a reinforced-concrete floor, insulated wall panels, and a metal roof deck over structural steel framing. The building walls on the west and north side are 2-hr rated. The adjacent turbine building wall is 3-hr rated. The concrete barriers separating and to the north of the ASD transformers are 2-hr fire rated.

F.2.3 FIRE DETECTION AND ALARM SYSTEMS

The fire detection and alarm systems are designed to rapidly identify developing fire conditions. Signals from plant fire detection instruments and fire suppression system alarms are transmitted via a proprietary fire alarm system to a fire alarm panel in the main control room.

Standard and functional zone annunciation indicator lights are located on the fire control panel in the main control room. Standard zone annunciation results from the installed fire detection instruments. Functional zone annunciation derives from the activation of individual devices such as deluge system flow devices, wet pipe sprinkler system flow devices, preaction system flow devices and low pressure sensors, carbon dioxide flow devices, and fire pump status. Some remote fire control panels and all main control room fire control panels have individual bells that sound automatically whenever their associated alarm devices are activated. There are no devices to automatically record incoming signals to the main control room. See Table F.2-1 for alternate recording methods.

Ionization, photoelectric, air duct ionization, thermal, ultraviolet fire detectors or incipient smoke detection are installed in hazard areas of the plant. Smoke detectors (ionization and photoelectric) are generally installed in areas containing moderate amounts of combustibles with no large combustible oil or gas hazards. Ionization detectors are not located in areas where the background radiation exceeds the manufacturer's rating. The sensitivity of thermal detectors is based on the normal average air temperature in the area where they are located. The incipient smoke detection system is located in the RW 467´ vital island where early warning is beneficial to fire safety. The incipient detectors draw a continuous flow of air through sampling ports into tubing spaced near the ceiling.

Manual fire alarm pull stations are generally located near exterior doorways and at each elevation of the main plant buildings in close proximity to the stairwells. Manual fire alarms are wired with other detection and alarm devices in appropriate fire detection zones.

Standard and functional alarms in the main control room do not initiate a plant-wide alarm signal. Depending on the fire condition, voice announcements over the public address system or emergency evacuation alarms may be used to warn plant personnel. A manual push button in the control room initiates a coded fire alarm radio signal to the DOE fire department dispatch center.

The fire protection system wiring for alarm initiation, alarm signaling, and control room annunciation at the fire control panel is electrically supervised to prevent false fire alarms due to open or grounded wiring. The supervisory circuitry sounds a trouble alarm using a single buzzer on the fire control panel on detection of open circuits, short circuits, low water pressure, low air pressure, or other trouble condition.

Fire detection systems which actuate suppression systems in safety-related areas have Class A circuitry (as defined in NFPA 72D - 1975). Other fire detection system wiring is Class B.

The plant fire detection system is powered from a local power panel which is normally supplied from uninterruptible power. Backup power is supplied from onsite emergency diesel generators.

The fire control panel mounted in the main control room is designated Seismic Category IM; all panel mounted equipment in this room is designated Seismic Category II. Other fire detection equipment, components, and accessories are designated Seismic Category II.

Portable detection systems may be used as a backup to fixed plant fire detection systems or as additional compensatory measures.

The fire detection system is designed in accordance with the guidelines of NFPA 72D - 1975 and NFPA 72E – 1974, except the incipient smoke detection system is designed in accordance with the guidelines of NFPA 72-2013. Differences between the installed plant configuration and the NFPA code sections are documented in Table F.2-1. Reference F.7.4.f approved deletion of fire detection in various plant areas.

The Radwaste elevator (MT-ELEV-4) fire detection zone is designed in accordance with the guidelines of ASME A.17.1 – 2010 and NFPA 72-2010. Detection is provided for every elevator car landing, the top of the elevator hoist way, and the equipment room. The system provides primary elevator recall, alternative elevator recall, and fire fighter emergency operation.

F.2.4 FIRE SUPPRESSION SYSTEMS

Automatic and manual suppression systems and manual fire fighting equipment are located within the plant as described below. The type of fire suppression provided for a particular plant area is based on consideration of the nature of the fire hazard in the area, the type of equipment protected, and the physical arrangement of the area. Fixed automatic suppression systems are installed to protect areas or equipment containing large quantities of combustibles, oils, or gases. Reference F.7.4.c approved the lack of fire suppression in various plant areas. Plant areas with fire suppression coverage and type of suppressant are shown in Figures F.6-7 through F.6-11.

The fire protection system is designed such that inadvertent operation or failure of any component of the system will not impair the ability of engineered safety features to safely shut

down or isolate the reactor, or to limit the release of radioactivity to the environment in the event of an accident.

Fire protection system piping in Seismic Category I areas of the reactor building, the diesel generator building, the radwaste control building, and the reactor/radwaste corridors, required to be seismically supported/mounted, are designed to Seismic Category IM and Quality

Assurance Class II+. Fire protection system piping not required to be seismically supported/mounted are designed to Seismic Category II and Quality Assurance Class II.

F.2.4.1 Fire Protection Water Supplies

The fire protection water supply system consists of a primary fire water supply, a secondary fire water supply, and yard mains to distribute water to the yard hydrant isolation valves and building standpipes. The fire protection water supply system is shown schematically in Reference F.7.7.1 and Figure F.6-21.

The primary water supply is drawn from the circulating water pump house basin. See Table F.3-1 section E.2.d for additional details.

The primary fire protection water supply consists of three fire pumps: two electric (FP-P-2A and FP-P-2B) and one diesel driven (FP-P-1), each of which have a design capacity of 2000 gpm at a total dynamic head of 298 ft. The primary fire pump discharge lines are piped so that each electric motor-driven pump discharges to the underground fire main loop (also referred to as fire main ring header).

Each of the three primary fire pumps is furnished with an automatic air release valve. In addition, the primary diesel-driven pump is furnished with a pressure relief valve and an open discharge cone back to the circulating water basin. Each electric motor-driven pump is furnished with a circulation relief valve. Three 10-in. fire protection branch lines have been provided (one for each fire pump) to a flow element, six-headed test header for fire pump testing. Fire protection water to the plant underground fire protection loop is supplied by two 12-in. fire protection main feed lines from the fire pump discharge.

The secondary water supply is drawn from a 400,000-gal embankment supported bladder tank (FP-TK-110) with a dedicated water supply of 284,640 gal. The water supply is delivered to the fire main loop by diesel-driven fire pump (FP-P-110) located in the water filtration building. The diesel fire pump is rated at 2500 gpm at a total dynamic head of 323 ft. The secondary water supply connects to the fire loop through a 10-in. branch line.

A pressure maintenance jockey pump (primary water supply jockey pump (FP-P-3) or secondary water supply jockey pump (FP-P-111)) is normally running to maintain system

pressure. Pressure control valves installed on the jockey pumps discharge limit system pressure to below 175 psig.

One or multiple fire pumps will start if the other running fire pumps cannot maintain system pressure. A drop in system pressure below 120 psig will cause motor-driven fire pump (FP-P-2A) to automatically start. A second motor-driven pump (FP-P-2B) will start after a 10 second delay, if pressure drops to 110 psig. The primary diesel-driven pump (FP-P-1) will start after a 15 second delay (20 second delay for loss of controller power), if pressure drops to 110 psig. The secondary diesel-driven fire pump (FP-P-110) will start after a 30 second delay (35 second delay for loss of controller power), if pressure drops to 100 psig. The above fire pump sequencing, along with reduced voltage soft start controllers and standpipe vacuum breakers, limit system pressure transients (Reference F.7.3.x).

The capacity of the fire water pumps is based on a maximum probable water system demand (1872 gpm in the cable spreading room), 500 gpm for a hose stream, and standby pump capacity available. Each motor-driven fire pump controller and each diesel-driven fire pump controller contains automatic start controls and manual start/stop controls. Any fire pump can be started either locally or from the main control room. After a start, a fire pump can be stopped only locally at the pump controller. Fire pump start, failure to start, and loss of current to the motor-driven pumps is indicated in the control room. Diesel-driven fire pump alarms include fire pump start, fire pump failure to start, high jacket water temperature, low oil pressure, and engine overspeed.

In the event of electrical power failure to a diesel-driven fire pump controller, the associated diesel-driven fire pump will start automatically. Both motor-driven fire pumps are inoperative during loss of offsite power.

Since either water supply can provide the necessary water demand and the circulating water basin is not considered a tank, the primary and secondary water supplies need not be interconnected.

Mitigation of system water hammer, from actuation of suppression systems causing standpipe voiding, is accomplished by diesel fire pump sequencing, redundant vacuum breakers at various standpipes (see Section F.2.5.3), and check valve FP-V-26 on the RWB-1 standpipe.

Fire protection water is distributed through a 12-in. underground fire main to supply station hydrants, fire hose stations, and suppression systems. The looped arrangement of the fire protection system ensures continued flow to the remainder of the system when sections of the system are isolated for tests or repairs. Post indicator valves sectionalize the yard loop to increase the reliability of fire protection water supply in case of a fire main break.

A series of 12-in. and one 8-in. branch lines lead from the underground fire main loop to various building standpipes. Each line contains an outside post indicator isolation valve. See Reference F.7.7.1 for more detail.

A fire main is routed under the diesel generator building. This was approved according to Reference F.7.4.k.

Leakage in the fire protection underground is monitored by a flow totalizer on the bypass line of the detector check valve on the discharge line of the jockey pump in the circulating water pump house. Serious leaks or a rupture of the fire protection system piping could also be indicated by fire pump running alarms in the main control room with no concurrent fixed automatic or preaction fire protection system operating alarms, no detector fire alarms, and no report of any fire or use of fire hose.

The location of a fire main leak may be determined by visual observation. If no visual indications are present, the location of the leak could be determined by using the sectionalizing valves to isolate a section of the system and observing the flow meter gauge on the detector check valve. The leak would be indicated by a decrease in flow as the section is isolated.

The fire protection water supply system interfaces with other plant systems include: 1) the 480 V AC distribution system supplies power to fire pump motors FP-M-P/2A (E-SL-51) and FP-M-P/2B (E-SL-61), 2) the tower makeup (TMU) system provides water from the Columbia River to the circulating water (CW) system basin which is the primary fire protection water supply, 3) the potable water cold (PWC) system provides water from PWC-TK-100 to the FP-TK-110 bladder tank which is the secondary fire protection water supply, 4) the fire protection water supply system provides water for motor cooling for both plant service water (TSW) pumps 1A and 1B (TSW-P-1A and TSW-P-1B) during initial TSW system startup and for bearing lubrication to TSW pump 1B (TSW-P-1B) during initial TSW system startup and 5) the fire water supply system provides a water sample to the dehalogenation system (CL-SKID-2) when TSW is not in-service. The fire protection water supply system can provide water via fire hose connections to: 1) the control air system (CAS), service air (SA) system via the cooling jacket water (CJW) system as an emergency source of cooling in the event that TSW is lost; 2) the condensate (COND) system as an alternate injection system to the reactor pressure vessel, 3) the fuel pool cooling (FPC) system spent fuel pool as an emergency makeup source in the event that demineralized water(DW) and standby service water (SW) are lost.

The fire pump installation is designed in accordance with the guidelines of NFPA 20 - 1974. Differences between the fire pump installation and the NFPA code sections are listed in Table F.2-1. The installation of the underground fire main is designed in accordance with the guidelines of NFPA 24 - 1973. Differences between the underground fire main installation and the NFPA code sections are listed in Table F.2-1.

F.2.4.2 Wet Pipe Sprinkler Systems

Wet pipe sprinkler systems are installed to provide automatic fire suppression of general area hazards. Wet pipe sprinklers consist of closed sprinklers attached to piping which contains water under pressure at all times. System operation is initiated when the local temperature rise from a fire reaches the operating temperature of fusible link sprinkler heads. Water discharge allows the hinged clapper in the alarm check valve to open. Valve operation provides remote alarm/indication in the main control room.

Temperature ratings for automatic sprinkler heads are selected based on normal area temperatures and proximity to heat generating components.
Sprinkler system piping may be designed using pipe schedules or hydraulically calculated to provide a minimum design density according to the nature of the hazard protected. See Figures F.6-7 through F.6-11 for locations of wet pipe sprinkler systems.

The wet pipe sprinkler system installation in the main control room is designed in accordance with the guidelines of NFPA 13 - 1975. This is the only wet pipe sprinkler system which protects a safety-related area. Differences between the installed plant configuration and the NFPA code sections are listed in Table F.2-1.

F.2.4.3 Preaction Sprinkler Systems

Preaction systems are used in areas where inadvertent operation of the sprinklers could damage or cause outages of vital electrical equipment. Preaction systems are installed in the cable spreading room and cable chase in the radwaste building, the reactor/radwaste corridor, the diesel generator building, and the RRC pump ASD building.

The preaction systems have closed fusible link sprinkler heads. Downstream of the control valve, the preaction sprinkler piping is normally dry and pressurized with air to supervise piping system integrity. Low air system pressure, which could indicate damaged piping or sprinkler heads, is alarmed in the control room. The CAS system provides supervisory air for preaction systems, except P85 which has its own compressor. Fire detectors located in the protected area activate a solenoid valve to open the deluge valve, supplying water to fill and pressurize the sprinkler system piping. Pull stations are also provided to allow manual operation of the preaction system. Sprinkler flow is not initiated until the local temperature increases to the operating temperature of the closed fusible link sprinkler heads.

In the cable spreading room, cable chase, ASD building, and reactor/radwaste corridor smoke detectors are used to trip the preaction system. The diesel generator preaction systems are actuated by thermal detectors. Detector operation and preaction system flow devices alarm in the main control room.

The preaction sprinkler systems installed in safety-related areas are designed in accordance with the guidelines of NFPA 15 - 1973. Differences between the installed plant configuration and the NFPA code sections are listed in Table F.2-1.

F.2.4.4 Deluge Water Spray Systems

Deluge water spray systems are used where fast response may be required to control or extinguish a fire. A deluge system employs open nozzles attached to a normally dry piping system. Fire detectors located in the hazard area activate a solenoid valve to open the deluge valve and initiate water flow. Electric heat actuating devices (HAD) indicate fire conditions by sensing an abnormally high temperature or an unusually rapid rise in temperature. Detector operation and deluge system waterflow devices alarm in the main control room.

Deluge water spray systems provide automatic fire protection for various locations in the turbine generator building where oil is stored or piped, for yard transformers, and for the reactor feed pump rooms in the turbine generator building. Spray nozzles near the transformer bushings are carefully placed to avoid flashovers at the bushings or to the piping.

Manually actuated deluge water spray systems are installed to protect charcoal filters in certain HVAC filter units. High temperature signals are used to alarm control room operators to potential fire conditions. The CAS system supplies air to the air operators of the SGT deluge valves.

Deluge water spray systems installed in safety-related plant areas are designed in accordance with the guidelines of NFPA 13 - 1975 and NFPA 15 - 1973. Differences between the installed plant configuration and the NFPA code sections are listed in Table F.2-1.

F.2.4.5 Carbon Dioxide Fire Suppression Systems

The low pressure carbon dioxide system automatically provides fire protection for the turbine generator exciter housing. A 1-in. manual carbon dioxide hose station, with reel and 100 ft of hose, is also provided for exciter housing protection on the turbine operating floor (501 ft). The carbon dioxide storage tank also provides carbon dioxide for generator purging during startup and shutdown conditions. The capacity of the carbon dioxide unit is 6 tons. Interlocks are provided such that the generator purge system cannot draw down tank level below that needed for automatic fire protection of the exciter housing.

The carbon dioxide unit is located in the northwest corner of the 441 ft level of the turbine generator building. The low pressure carbon dioxide storage tank maintains liquid carbon dioxide at approximately 300 psig and 0°F by refrigeration. The refrigeration is accomplished by a compressor and refrigeration coil within the vessel. The carbon dioxide storage unit is electrically powered and automatically controlled and monitored by means of pressure

switches. High or low carbon dioxide pressure causes a remote alarm and indication in the main control room.

Thermal detectors located in the generator exciter housing provide early warning alarm in the main control room allowing the operator to review and evaluate the problem prior to manual or automatic actuation of the system. Automatic operation of the carbon dioxide system is initiated when the temperature increases to the setpoint of the high temperature detector. However, if a fire is noticed before the temperature detector actuates the system, the system can be manually actuated by a break glass station located near the carbon dioxide protected area. An automatic timer regulates the carbon dioxide discharge for both automatic and manual electric operation to provide even distribution of the discharge.

Actuation of the system alarms locally and remotely in the main control room. The local alarms consist of two separate alarm devices located near the protected area. One device sounds 20 sec before its associated carbon dioxide system is released and the other device sounds continuously during the duration of such release.

The carbon dioxide system is designed in accordance with the guidelines of NFPA 12 - 1973. The carbon dioxide distribution system is shown schematically in Reference F.7.7.n.

F.2.4.6 Halon 1301 Fire Suppression Systems

Halon 1301 suppression systems are installed in normally occupied areas where the application of water would be inappropriate. Halon 1301 provides automatic fire protection for the main control room PGCC under floor areas.

Eighteen Halon 1301 systems are installed in the various main control room PGCC subfloor duct sections to discharge on activation of their associated thermal detector units. Each system is sized to provide a 20% Halon concentration for a minimum duration of 20 minutes. Cable penetrations into the PGCC are sealed to contain Halon discharge. Thermal detector operation also causes a local alarm and indication on the main control room fire control panel. Smoke detectors are located in each PGCC section to provide early warning alarm. Each system includes supervision features which actuate a trouble alarm and indication on the main control room fire control panel in case of a wiring or component failure.

The PGCC Halon suppression system is designed in accordance with the guidelines of NFPA 12A - 1973 and Reference F.7.5.j. See Section 8.3.1.4.3.6.2 and Figure 8.3-36 for more detail. The Halon system was approved according to Reference F.7.4.a.

F.2.4.7 Dry Chemical Fire Suppression Systems

Dry chemical suppression systems may be found installed in approved portable hazardous material storage buildings within the plant. These systems automatically actuate by melting of

the fusible link(s) or manually by a local pull station. Columbia Generating Station is not committed to NFPA 17 compliance.

F.2.5 MANUAL FIRE FIGHTING EQUIPMENT

Manual fire fighting equipment includes protective clothing, SCBA, fire hydrants and hydrant hose equipment, standpipe and fire hose stations, AFFF foam carts, portable fire extinguishers, and smoke removal equipment.

F.2.5.1 Protective Clothing and Self-Contained Breathing Apparatus

Protective clothing and SCBAs are provided in designated locations for use by the plant fire brigade. The SCBA positive pressure masks are National Institute for Occupational Safety and Health (NIOSH) approved. At least a 1-hr supply of breathing air in extra bottles is located onsite for each required SCBA. See Table F.3-2 III.H for more details.

F.2.5.2 Yard Fire Hydrants and Hydrant Hose Equipment

Fire hydrants are provided at approximately 300 ft intervals along the fire main loop around the main plant buildings and at each standby service water pump house. A mobile fire response vehicle is equipped with the equivalent of three hose houses (see Table F.2-1). Fire hydrants adjacent to the transformers and the diesel generator building are strategically located as backup protection in the event of a large scale fire in these areas. Fire mains and hydrants are designed in accordance with NFPA 24 - 1973. Differences between the installed plant configuration and the NFPA code sections are listed in Table F.2-1.

F.2.5.3 Standpipes, Hose, and Foam Carts

Standpipe and hose connections provide a second line of defense for fires which may get beyond the extinguishing capabilities of hand fire extinguishers. Standpipes and hose racks are installed so that all safety-related areas are within 30 ft of the nozzle when 100 ft of 1.5-in. hose is attached to the connection. The reactor building has 150 ft of 1.5-in. hose to reach all areas as approved in Reference F.7.4.d. Most standpipes are located in protected stairways. Each standpipe contains an isolation valve, hose racks on each landing, takeoffs to sprinkler or other water fire protection systems where applicable, and a pressure gauge at the top of each standpipe. Two vacuum breakers are installed at the top of standpipes RB-1, RB-2, RWB-1, RWB-2, TGB-1, TGB-2, and TGB-3, but only a single vacuum breaker per standpipe is required to be functional. During a fire water system actuation, the vacuum breakers introduce an air bubble that mitigates potential pressure transients. Venting the small volume of trapped air would not hamper fire fighting activities. To ensure the availability of primary and secondary fire protection, the following standpipes have been interconnected: TGB-1 and TGB-2; TGB-3, TGB-5, and RWB-1; and DG-1 and the 12-in. branch line to RWB-1. Hose station locations are shown on Figures F.6-7 through F.6-11. Where large combustible liquid fire hazards exist, AFFF foam eductors/carts are present. Standpipes and hose are designed in

accordance with NFPA 14 - 1974. Differences between the installed plant configuration and the NFPA code sections are listed in Table F.2-1.

F.2.5.4 Portable Extinguishers

Portable extinguishers are strategically located within the plant to provide plant personnel with a readily available means to extinguish a fire in its early stages. Halon 1211, dry chemical, foam/water AB and wheeled dry chemical extinguishers are used. Portable fire extinguishers are installed in accordance with NFPA 10 - 1975 based on the class and quantity of combustibles in that location.

F.2.5.5 Smoke Removal

Portable fans are available for smoke removal. Fixed smoke removal fans consist of WEA-FN-52 which purges the cable spreading room, cable chase, and remote shutdown room. WEA-FN-7 is located on the radwaste building 507-ft roof and is used primarily for purging the main control room. Large portable fan REA-FN-16 can be connected to the reactor building HVAC exhaust at 471 ft and 572 ft. See Section 6.4 for control room actions and habitability during onsite and offsite fires. Smoke purging activities include monitoring to prevent an uncontrolled release.

F.2.6 OPERATOR ACTION EQUIPMENT

Equipment for credited operator actions consists of emergency lighting and communication equipment.

F.2.6.1 Emergency Lighting

Fire protection credited emergency lighting falls into two categories: (a) 1.5-hr battery-backed life safety lighting systems and diesel backed emergency AC lighting and (b) 8-hr Appendix R credited lighting consists of fixed 8-hr battery units, diesel backed normal-emergency AC lighting and portable 8-hr lanterns. See Section 9.5.3 and Figures F.6-18 through F.6-20 for more detail.

F.2.6.2 Emergency Communications

Private branch exchange (PBX) is used for some post-fire safe shutdown operator manual actions that require communication with the control room or the remote shutdown room, See Figures F.6-18 through F.6-20. The specific manual operator actions that require PBX communications are listed in Reference F.7.3.d. LCS 1.10.8 ensures the specific credited PBX phones remain functional. Fire brigade activities utilize either radio or PBX phones for communication with the control room or remote shutdown room. No single fire will disable

fire brigade communications (Reference F.7.3.ff). See Section 9.5.2 for more detail on communications.

F.2.7 INSPECTION AND TESTING

Periodic inspection and testing of fire suppression water supply systems, essential spray and sprinkler systems, fire hose stations, yard fire hydrant and hydrant hose equipment, essential fire rated assemblies, fire detection instrumentation, PFSS lighting, and PFSS communications is in accordance with LCS 1.10. Periodic inspection and testing of carbon dioxide suppression system, Halon systems, dry-chemical suppression system, manual fire extinguishers, non-essential spray and sprinkler systems, and non-essential fire-rated assemblies is in accordance with either Section F.2.1 NFPA codes, insurer criteria, manufacturer recommendations, or applicable industry guidance as documented in the engineering evaluations per Section F.4.2.3.

Periodic testing is performed within the specified intervals with a maximum allowable extension not to exceed 25% of the interval. Periodic tests need not be performed on inoperable equipment. Testing which would require entry into high radiation areas is performed when radiation levels allow. However, there are some areas of CGS that remain high radiation areas at all times which will require an ALARA evaluation to determine the respective testing interval.

Inspections of the fire pump diesel engines will be conducted periodically in accordance with plant procedures prepared in conjunction with the manufacturer's recommendations and Reference F.7.1.1.d.

FSAR Appendix A.2.1 describes the aging management program for various fire system scopes. This requires a condition monitoring program comprised of inspection and testing.

Table F.2-1

Code Deviations

CODE SECTION		POSITION	
		NFPA 13-1975	
3-9.3	Protection of Piping Against Damage Where Subject to Earthquakes	3-9.3	Protection of Piping Against Damage Where Subject to Earthquakes
3-9.3.3	Sleeves shall be provided around all piping extending through the walls, floors, platforms, and foundations. (a) Minimum clearance between the pipe and sleeve shall not be less than 1 in. for pipes 1 in. through 3.5 in. and 2 in. for pipe sizes 4 in. and larger. (b) The clearance between pipe and sleeve shall be filled with noncombustible flexible material such as mineral wool, fiberglass, or equivalent.	3-9.3.3	No design limitations exist to ensure annular gap is greater than 1 or 2 in. Where piping penetrates a fire-rated barrier, penetration seals are installed in which the seal design accounts for pipe movement. Piping in safety-related areas is seismically qualified.
3-11	Joining of Pipes and Fittings	3-11	Joining of Pipes and Fittings
3-11.2.2	Sections of welded piping shall be joined by means of screwed flanged or flexible gasketed joints or other approved fittings.	3-11.2.2	The control room sprinkler system as installed used other design criteria (seismic and flooding concerns) which required welding as the method of installation.
3-13	Valves	3-13	Valves
3-13.2.3	Valves controlling sprinkler systems, except underground gate valves with roadway boxes, shall be supervised open by one of the following methods: (a) Central station, proprietary or remote station alarm service, (b) Local alarm service which will cause the sounding of an audible alarm at a constantly attended point, (c) Locking valves open, (d) Sealing of valves and approved weekly recorded inspection when valves are located within fenced enclosures under the control of the owner.	3-13.2.3	Control valves are locked or sealed open and inspected periodically.

Table F.2-1

Code Deviations (Continued)

	CODE SECTION		POSITION
3-14	Hangers	3-14	Hangers
3-14.1.5	The components of hanger assemblies which attach directly to building structure, except for mild steel hangers formed from rod, shall be listed.	3-14.1.5	Not all hangers are listed. For hangers with special seismic requirements the hanger design is certified by a registered professional engineer in accordance with Section 3-14.1.2.
3-16	Sprinkler Alarms	3-16	Sprinkler Alarms
3-16.2	Local waterflow alarms shall be provided on all sprinkler systems having more than 20 sprinklers.	3-16.2	Columbia Generating Station (CGS) sprinkler systems do not have local waterflow alarms. Each CGS suppression system has a proprietary protective alarm system that annunciates in the continuously manned control room. This will rapidly prompt manual suppression activities. On average, the plant has a low human occupancy. Thus, actuation of local alarms will have little effect since there is typically no one present to benefit from them.
3-16.3.1	The alarm apparatus for a wet-pipe system shall consist of an approved alarm check valve or other approved waterflow detecting alarm device with the necessary attachments required to give an alarm.	3-16.3.1	The UL Listing and FM Approval of the alarm check valve have been voided by drilling a small hole through the alarm bypass check valve to prevent trapping excess system pressure. In addition, a second torsion spring has been installed on the alarm check valve clapper of some systems to help reseat the clapper and prevent false alarms. These changes have no adverse impact on the alarm check valve's reliability or the system's capability to suppress fires.

Table F.2-1

Code Deviations (Continued)

	CODE SECTION		POSITION
4-4	Locations or Conditions Involving Special Consideration	4-4	Locations or Conditions Involving Special Consideration
4-4.20	Small Rooms. In small rooms such as rest rooms, toilets, closets, and offices with smooth ceilings, sprinklers may be located a maximum distance of 7 ft 6 in. from any two walls of this room providing the total area of the room divided by the number of sprinklers does not exceed the limitation of 4-2.2.1 and 4-2.2.2. The maximum area of such a room is defined as 800 ft^2 for Light Hazard and 520 ft^2 for Ordinary Hazard occupancies.	4-4.20	Small Rooms. Sprinkler heads are located a maximum distance of 7 ft 6 in. from two walls as required by code. In the control room shift manager's office, there are two sprinklers in an area of approximately 250 ft^2. Later revisions of this code (1985) allow sprinkler heads in small rooms to be located up to 9 ft from one wall. The exception has been used in this room. The sprinklers are below the maximum spacing of 130 ft^2 for ordinary hazard occupancy.

Table F.2-1

Code Deviations (Continued)

CODE SECTION		POSITION
	NFPA 14-1974	
CHAPTER 1 – GENERAL INFORMATION		CHAPTER 1 - GENERAL INFORMATION
14	Combined Systems	14 Combined Systems
145	Each outlet from a combined riser to the sprinkler system shall have an individual control valve of the same size as the outlet.	145 The TGB-1 standpipe connection for deluge system #D55 is reduced from 10 in. to 4 in. before the control valve. The connection size is sufficient to provide the water supply required by the deluge system.
15	Approved Devices	15 Approved Devices
151	All devices and materials used in standpipe systems shall be of approved type. Note: NFPA 14-1996 section 2-6 requires the valves to be listed.	151 Vacuum breakers installed at the top of standpipes RB-1, RB-2, RWB-1, RWB-2, TGB-1, TGB-2, and TGB-3 are not UL or FM approved, since none are available. The vacuum breakers are constructed of approved materials. Each of the above standpipes has redundant vacuum breakers that will ensure reliability. The vacuum breakers mitigate fire water system pressure transients and help to ensure fire water system availability. Leakage failure of a vacuum breaker would not reduce the water supply below minimum flow rates and potential flooding is bounded by existing analysis. The UL listed, cast iron isolation valves FP-V-29D (for standpipe riser RB-1) and FP-V-394 (for riser RB-2) were replaced by cast steel valves in 1998. The cast steel valves are not listed, but are approved. The cast steel valves are stronger, more ductile and resistant to yield fractures. The corrosion properties of the cast steel valves are acceptable. The presence of these stronger valves makes the two tallest CGS standpipe risers more resistant to water hammer induced valve ruptures.

Table F.2-1

Code Deviations (Continued)

CODE SECTION		POSITION	
21	Design Basis	21	Design Basis
218	An approved means of maintaining a positive pressure on all zones of standpipe systems shall be provided.	218	During system transients, pressure at the top of some standpipes may not maintain a positive pressure. However, water hammer analysis shows the system pressure to remain within design limits (Reference F.7.3.x).
CHAPTER 3 - NUMBER AND LOCATION OF STANDPIPES		CHAPTER 3 - NUMBER AND LOCATION OF STANDPIPES	
32	Number of Standpipes	32	Number of Standpipes
321	The number of hose stations for Class I and Class III services in each building and in each section of a building divided by fire walls shall be such that all portions of each story of the building are within 30 ft of a nozzle attached to not more than 100 ft of hose.	321	The reactor building requires 150 ft long hoses to reach all areas. This was approved per Reference F.7.4.d. The radwaste building room C405 requires 250 ft of hose. This is not a safety-related area of the plant.
CHAPTER 4 - HOSE OUTLETS		CHAPTER 4 - HOSE OUTLETS	
41	Location of Hose	41	Location of Hose
412	Hose outlets for Class I service should be located in a stairway enclosure, and for Class II service in the corridor or space adjacent to the stairway enclosure and connected through the wall to the standpipe. For Class III service, the outlets for large hose should be located in a stairway enclosure, and for small hose located in the corridor or space adjacent to the stairway enclosure.	412	Hose stations are installed for Class III service. Building standpipes were originally provided with large hose outlets located in the stairways. Fire tactics have changed to prefer smaller hose lines for plant fire suppression activities. Smaller hose lines are currently provided.
413	Valves of approved indicating type shall be provided at the main riser for controlling branch lines to hose outlets so that in the event that the branch is broken during the fire, the fire department may shut off this branch, conserving the water for their use.	413	Valves are not provided at the branch lines to hose outlets at the main risers. The standpipe system is welded to increase its reliability under normal and fire conditions.

Table F.2-1

Code Deviations (Continued)

	CODE SECTION		POSITION
44	Hose Valves	44	Hose Valves
442	Where the static pressure at any standpipe outlet exceeds 100 lb/in.^{2}, an approved device shall be installed at the outlet to reduce the pressure with required flow at the outlet to 100 lb/in.^{2}	442	At certain hose stations, the static pressure at the hose outlet could exceed 100 psi. Hose stations are provided for use only by the plant fire brigade. The fire brigade is hands-on trained and drilled on the use of high pressure hose lines. Pressure reducing valves are not required.
451	Nozzles shall be of an approved type and have a discharge coefficient not exceeding 7.5.	451	The Protek Model #379 fog nozzle is not UL Listed or FM Approved. Its construction is similar to the Protek Model #366 which is FM Approved. The Protek Model #379 was field tested during fire brigade training and was found to be an effective hose nozzle.
CHAPTER 5 - WATER SUPPLIES		CHAPTER 5 - WATER SUPPLIES	
56	Fire Department Connections	56	Fire Department Connections
561	A connection through which the public fire department can pump water into the standpipe system makes a desirable auxiliary supply. One or more fire department connections shall be provided for each Class I or Class III standpipe system.	561	Fire department connections are not provided. The capability exists for the Fire Department to draft from on-site water storage and pump into the underground fire protection water supply distribution system utilizing a fire hydrant.

Table F.2-1

Code Deviations (Continued)

CODE SECTION		POSITION	
NFPA 15-1973			
CHAPTER 2 - SYSTEM COMPONENTS		CHAPTER 2 - SYSTEM COMPONENTS	
2030	Spray Nozzles	2030	Spray Nozzles
2031	Care shall be taken in the application of nozzle types. Distance of "throw" or location of nozzle from surface shall be limited by the nozzle's discharge characteristics (see 4070). Care shall also be taken in the selection of nozzles to obtain waterways which are not easily obstructed by debris, sediment, sand, etc., in the water. Requirements for strainers and their placement are described in 2110 and 4110.	2031	Nozzles were selected based on protection requirements. Strainers are not provided for all small orifice nozzle systems.
2040	Piping	2040	Piping
2042	Galvanized pipe shall be used except that; where corrosion of galvanized pipe may be caused by corrosive atmospheres or the water, or by additives to the water, other suitable coatings shall be provided.	2042	Exterior surface of piping is galvanized.
2050	Fittings	2050	Fittings
2052	Rubber gasketed fittings subject to direct fire exposure are generally not suitable. Where necessary for piping flexibility, or for locations subject to earthquake, explosion, or similar hazards, such installations are acceptable. In such cases, special hanging or bracing may be necessary.	2052	Rubber gaskets are used for flange connections at preaction system valves in the area protected by the preaction system. The remainder of the piping joints are threaded connections. Pipe supports for these preaction systems are designed and installed to Seismic Category I requirements.

Table F.2-1

Code Deviations (Continued)

CODE SECTION		POSITION
CHAPTER 4 - SYSTEM DESIGN AND INSTALLATION		CHAPTER 4 - SYSTEM DESIGN AND INSTALLATION
4020	Design Guides	4020 Design Guides
4021	Water spray systems shall conform to the applicable requirements of the following Standards of the National Fire Protection Association, except where otherwise specified herein: - Installation of Sprinkler Systems (NFPA No 13 - 1973) - Installation of Standpipe and Hose Systems (NFPA 14 - 1973) - Wetting Agents (NFPA 18 - 1973) - Installation of Centrifugal Fire Pump (NFPA 20 - 1972) - Water Tanks for Private Fire Protection (NFPA 22 - 1971) - Outside Protection (NFPA 24 - 1973) - Supervision of Valves (NFPA 26 - 1958) - National Electric Code (NFPA 70 - 1971) - Central Station Protective Signaling Systems (NFPA 71 - 1972) - Local Protective Signaling Systems (NFPA 72A - 1972) - Auxiliary Protective Signaling Systems (NFPA 72B - 1972) - Remote Station Protective Signaling Systems (NFPA 72C - 1972) - Proprietary Protective Signaling Systems (NFPA 72D - 1973) - Protection from Exposure Fires (NFPA 80A - 1970) - Indoor General Storage (NFPA 231C - 1972) - Rack Storage of Materials (NFPA 231C - 1973) Note: Components of the electrical portions of these protective systems, where installed in locations subject to hazardous vapors or dusts, shall be of types approved for use therein.	4021 The design of the systems has been reviewed by the authority having jurisdiction and approved for insurance purposes. CGS is not committed to meet all of the specified NFPA codes.

Table F.2-1

Code Deviations (Continued)

CODE SECTION		POSITION	
4030	Density and Application	4030	Density and Application
4032	(b) Nozzles shall be installed to impinge on the areas of the source of the fire, and where spills may travel or accumulate. The water application rate on the provable surface of the spill shall be at the rate of not less than 0.50 gpm/ft^2.	4032	(b) A water spray density of 0.30 gpm/ft^2 is provided in areas of potential spill in the diesel generator rooms. The diesel fuel piping and storage tanks are welded, Seismic Category I systems; thus a line break and resulting fuel spill are unlikely. The day tanks are in separate rooms which have an average density of approximately 0.90 gpm/ft^2.
4052	Area Drainage	4052	Area Drainage
	(a) Adequate provisions shall be made to promptly and effectively dispose of all liquids from the fire area during operation of all systems in the fire area. Such provisions shall be adequate for: (1) Water discharged from fixed fire protection systems at maximum flow (2) Water likely to be discharged by hose streams (3) Surface water (4) Cooling water normally discharged to the system		(a) The RRC ASD transformer sumps are not sized to contain the total contents of 10 minutes of deluge actuation, manual hose stream, and the contents of the transformer oil. The ASD transformers are not safety-related. Fire-rated barriers separate the two transformers, the transformers from the ASD building, and the transformers from the turbine building. The grade slopes away from the transformers to a yard french drain.
4063	Drain Valves. Readily accessible drains shall be provided for low points in underground and aboveground piping.	4063	Drains are provided; however, not all drains are readily accessible.
4100	Hangers	4100	Hangers
4101	System piping shall be adequately supported. All supports in the fire area should be protected by the system. In any area where possibility of explosion may be recognized, special care shall be taken to support the piping from portions of the structure least liable to disruption.	4101	Not all supports are protected by the spray patterns. Failure of unprotected supports is unlikely as the systems are supported to Seismic Category IM requirements.

Table F.2-1

Code Deviations (Continued)

CODE SECTION		POSITION	
4110	Strainers	4110	Strainers
4111	Main pipeline cleaners shall be provided for all systems using nozzles with waterways less than 3/8 in. and for any system where the water is likely to contain obstructive material.	4111	The manually actuated deluge systems which protect the SGTs and control room HVAC charcoal filter units have nozzles less than 3/8 in. but are not provided with strainers. These interior systems are periodically tested with air to verify the nozzles are not obstructed.
CHAPTER 8 - AUTOMATIC DETECTION EQUIPMENT		CHAPTER 8 - AUTOMATIC FIRE DETECTORS	
8050	RESPONSE TIME	8050	RESPONSE TIME
8051	The heat detection system shall be designed to cause actuation of the special system water control valve within 20 sec under expected fire conditions. Under test conditions when exposed to a standard heart source, the system shall operate within 40 sec. These are to be considered as maximum response times subject to the considerations described in 8011 and 8031.	8051	Response time of detectors is not checked by plant procedures. Detectors are checked for operation only. The heat detection system does not have any artificial delays that would prevent the immediate activation of the system. Later editions of this code have removed the time limit and replaced it with this intent only.

Table F.2-1

Code Deviations (Continued)

CODE SECTION		POSITION	
NFPA 20-1974			
CHAPTER 2 - GENERAL		CHAPTER 2 – GENERAL	
2-8	Equipment Protection	2-8	Equipment Protection
2-8.6	Floors shall be pitched for adequate draining of escaping water or fuel away from critical equipment such as the pump, driver, controller, fuel tank, etc.	2-8.6	The equipment is installed on concrete pedestals.
2-9	Discharge Pipe and Fittings	2.9	Discharge Pipe and Fittings
2-9.7	Protection of Piping Against Damage Due to Movement	2-9.7	Protection of Piping Against Damage Due to Movement
2-9.7.1	A clearance of not less than 1 in. (25.4 mm) shall be provided around pipes which pass through walls or floors.	2-9.7.1	Not all penetrations are provided with a 1-in. annular clearance. Fire pump discharge piping is designed to Seismic Category II requirements.
CHAPTER 6 - ELECTRIC DRIVE FOR PUMPS		CHAPTER 6 - ELECTRIC DRIVE FOR PUMPS	
6-3.3.2	The voltage at the motor shall not drop more than five percent below the voltage rating of the motors when the pumps are being driven at rated output, pressure, and speed, and when the lines between the power stations(s) and the motors are carrying their peak loads.	6-3.3.2	The running voltage for FP-M-P/2A and FP-M-P/2B is acceptable when the system is fed from TR-S. However, when fed from TR-N, the normal running voltage drop is slightly more than 5% below rated voltage. Since the two NEMA Standard fire pump motors are rated to operate satisfactorily at 10% below rated voltage, this condition will not affect motor operability.

Table F.2-1

Code Deviations (Continued)

CODE SECTION		POSITION	
CHAPTER 7 - ELECTRIC DRIVE CONTROLLERS		CHAPTER 7 - ELECTRIC DRIVE CONTROLLERS	
7-1.1	General	7-1.1	General
7-1.1.1	All controllers shall be specifically listed for fire pump service.	7-1.1.1	Fire pump controllers FP-CP-2A and FP-CP-2B are UL listed for fire pump service. The controllers are reduced voltage type to provide a soft start to reduce pressure transients. Circuit failure of the new controllers would cause a hard start which could cause pressure transients in excess of that allowed. Therefore, the new controllers were modified to cause the pump to fail "off" in the remote occurrence of a circuit failure. This voids the UL listing. Upon failure of a single electric fire pump, the other electric pump would be available. If both electric fire pumps were inoperable, there are two diesel fire pumps available. LCS 1.10.1 limits fire pump inoperability periods.
CHAPTER 8 - DIESEL ENGINE DRIVE		CHAPTER 8 - DIESEL ENGINE DRIVE	
8-2	Engines	8-2	Engines
8-2.2.1	Engines, after the corrections for altitude and ambient temperature specified in 8-2.2.2 and 8-2.2.3 below, shall have a bare engine brake horsepower rating not less than 20 percent greater than the maximum brake horsepower required to drive the pump at its rated revolutions per minute.	8-2.2.1	After making the corrections, neither FP-ENG-1 or FP-ENG-110 provide 20% greater horsepower. However, operating experience shows the engines do have sufficient horsepower to meet the required water flow rates under any conditions of pump load.

Table F.2-1

Code Deviations (Continued)

CODE SECTION		POSITION	
CHAPTER 9 - ENGINE DRIVE CONTROLLERS		CHAPTER 9 - ENGINE DRIVE CONTROLLERS	
9-1.3	Construction	9-1.3	Construction
9-1.3.4	Locked Cabinet. All switches required to keep the controller in the "automatic" position shall be within locked cabinets having break glass panels.	9-1.3.4	Locked Cabinet. Pump controller cabinets are not locked. Controllers are supervised; "non-auto" alarms are monitored in the main control room.

Table F.2-1

Code Deviations (Continued)

CODE SECTION		POSITION
NFPA 24-1973		
CHAPTER 3 - VALVES		CHAPTER 3 - VALVES
36	Identifying and Securing	36 Identifying and Securing
3601	All control valves shall be plainly marked indicating the section or portion controlled. To ensure that valves are kept open, it is essential to provide central station proprietary valve supervisory service and/or to secure the valves in the open position using an acceptable type of seal which must be destroyed before the valve can be closed. Weekly recorded inspections shall be made.	3601 Yard control valves are labeled in accordance with the plant tagging procedures. Valves are locked in position and inspected periodically.
CHAPTER 5 - HOSE HOUSES AND EQUIPMENT		CHAPTER 5 - HOSE HOUSES AND EQUIPMENT
56	Equipment - General	56 Equipment - General
5601	Depending on local conditions and subject to approval of the authority having jurisdiction, each hose house should be equipped with: 2 - Underwriters' play pipes 1 - pair play pipe brackets 1 - fire axe 1 - fire axe brackets 1 - crowbar 1 - extra hydrant wrench (in addition to wrench on hydrant) 4 - coupling spanners 2 - hose and ladder straps 1 - Underwriter's play pipe holder 2 - 2.5-in. hose washers (spares)	5601 A mobile fire response vehicle is equipped with the equivalent equipment of three hose houses. This includes: 600 ft. - 2.5-in. hose 600 ft. - 1.5-in. hose 3 - 2.5-in. adjustable fog nozzles 6 - 1.5-in. adjustable fog nozzles 6 - hydrant wrenches 12 - coupling spanners 3 - 2.5-in. shut off valves 3 - 2.5-in. x 1.5-in. x 1.5-in. wye valves 6 - 2.5-in. hose washers (spares) 6 - 1.5-in. hose washers (spares) 3 - crowbars Play pipes, play pipe brackets, play pipe holders, fire axes, fire axe brackets, and hose/ladder straps are not necessary for fire fighting and are not required by NFPA 24-2002.

Table F.2-1

Code Deviations (Continued)

	CODE SECTION		POSITION
58	Nozzles	58	Nozzles
5801	Nozzles shall be approved type.	5801	The Protek Model #379 fog nozzle is not UL Listed or FM Approved. Its construction is similar to the Protek Model #366 which is FM Approved. The Protek Model #379 was field tested during fire brigade training and was found to be an effective hose nozzle.
59	Domestic Service Use Prohibited	59	Domestic Service Use Prohibited
5901	The use of hydrants and hose for purposes other than fire or fire drills shall be prohibited.	5901	The use of hydrants for nonfire-related activities is controlled by plant procedures under controlled conditions only.
CHAPTER 8 - UNDERGROUND PIPE AND FITTINGS		CHAPTER 8 - UNDERGROUND PIPE AND FITTINGS	
81	Selection of Pipe	81	Selection of Pipe
8101	Piping shall be approved asbestos cement, cast iron, ductile iron, reinforced concrete, steel, or other approved pipe. Steel pipe shall have minimum thickness of 0.250 in., and be coated and lined. See paragraph 8301 for required coating and lining.	8101	CGS has ductile iron, cast iron, and steel pipe installed in the fire protection underground loop. The ductile and cast iron piping is cement lined per ANSI A21.4. The steel pipe installed in the fire protection underground loop system is not cement lined. Later editions of this code required only that steel pipe be coated (not lined).
83	Coating and Lining	83	Coating and Lining
8301	Where coating or lining or both are required for pipe or fitting, the coating or lining or both shall be approved. Coating and Lining Standards. The following apply to the application of coating and linings: - American Standard for Cement Mortar Lining for Cast-Iron Pipe and Fittings for Water, ANSI A21.4-1974, AWWA C104-71.	8301	The exterior of underground fire protection piping is coated with bitumastic enamel and coal tar. See paragraph 8101 above for discussion of interior coating.

Table F.2-1

Code Deviations (Continued)

CODE SECTION		POSITION
	- AWWA Standard for Coal-Tar Enamel.Protective Coatings for Steel Water Pipe, AWWA C203-66. - AWWA Standard for Cement-Mortar Protective Lining and Coating for Steel Water Pipe, AWWA C205-71. - AWWA Standard for Cement-Mortar Lining of Water Pipe Lines in Place, Sizes 16 in. and Over, AWWA C602-67.	
CHAPTER 9 - RULES FOR LAYING PIPE		CHAPTER 9 - RULES FOR LAYING PIPE
91	Depth of Cover	91 Depth of Cover
9101	The depth of cover over water pipes should be determined by the maximum depth of frost penetration in the locality where the pipe is laid, and in those locations where frost is not a factor, the depth of cover shall be not less than 2.5 ft to prevent mechanical injury. Pipe under driveways shall be buried a minimum of 3 ft and under railroad tracks a minimum 4 ft. Recommended depth of cover above the top of underground yard mains is indicated in Figure 91.	9101 Certain piping in the warehouse area does not have the required depth of cover. However, it was verified that the depth of bury is adequate for this locality (Reference F.7.3.v).
93	Protection Against Damage	93 Protection Against Damage
9301	Pipe should not be run under buildings or under heavy piles or iron, coal, etc. Where piping necessarily passes under a building, the foundation walls shall be arched over the pipe. See paragraph 3502. [Paragraph 3502 … It is also recommended that valves be installed to shut off sections of pipe under buildings.]	9301 The routing of a fire main under the diesel generator building was approved by the NRC in Reference F.7.4.k.
9302	Where riser is close to building foundations, underground fittings of proper design and type shall be used to avoid pipe joints being located in or under the foundations.	9302 See paragraph 9301 above.

Table F.2-1

Code Deviations (Continued)

CODE SECTION		POSITION	
9303	Special care is necessary in running pipes under railroad tracks, under roads carrying heavy trucking, under large piles of iron, under building having heavy machinery liable to fall and under buildings containing hammers or other machinery or having heavy trucking which will subject the buried piping to shock or vibration. Where subject to such breakage, pipes should be run in a covered pipe trench or otherwise be properly guarded.	9303	See paragraph 9301 above.
96	Anchoring Fire Mains	96	Anchoring Fire Mains
9605	Thrust blocks are satisfactory where soil is suitable. Table 9605 gives bearing areas against undisturbed vertical well of a trench in soil equivalent to sand and gravel cemented with clay. For other soils, the values in the table should be multiplied by an appropriate factor.	9605	Thrust blocks were not installed against undisturbed soil. Design drawings specified a minimum area requirement in square feet of thrust block to be in contact with the trench wall. Compression of soil behind the thrust blocks was used to obtain a high density equivalent to undisturbed soil.

TABLE 9605
AREA OF BEARING FACE OF
CONCRETE THRUST BLOCKS

Pipe Size (in.)	1/4 bend (ft^2)	1/8 bend (ft^2)	Tees, Plugs, Caps, Hydrants (ft^2)
4	2	2	2
6	5	3	4
8	8	5	6
10	13	7	9
12	18	10	13
14	25	14	18
16	32	18	23

Table F.2-1

Code Deviations (Continued)

CODE SECTION		POSITION	
NFPA 30-1973			
2343	Flammable or combustible liquid storage tanks located inside of buildings shall be provided with an automatic-closing heat actuated valve.	2343	Diesel generator and HPCS day tanks are not equipped with an automatic-closing heat actuated shutoff valve. The day tank rooms are equipped with preaction sprinkler systems and are 3-hr rated. Piping from day tanks to diesels are routed primarily in floor trenches and have substantial construction (Reference F.7.6.h).

Table F.2-1

Code Deviations (Continued)

CODE SECTION		POSITION
NFPA 72D-1975		
CHAPTER 1 - GENERAL		CHAPTER 1 - GENERAL
ARTICLE 120 - SYSTEM FACILITIES		ARTICLE 120 - SYSTEM FACILITIES
1210	System Operation	1210 System Operation
1211	The proprietary system shall be arranged to receive and record all signals received at its central supervising station and to transmit to the fire department, or other location acceptable to the authority having jurisdiction, indication of the building or group of buildings from which an alarm has been received. The transmitting means shall be reliable and use supervised circuits. Where permissible and deemed necessary, the means shall consist of a direct supervised circuit to the fire department or a municipal fire, alarm box, either ordinary or auxiliary type, within 50 ft of the central supervising station.	1211 The system receives but does not automatically record all signals at the fire control panel in the main control room. The circuits are supervised. Fire alarms are manually logged. Logs are retained as plant records. A manual push button on the fire control panel is used to transmit a radio fire alarm for outside fire department assistance.
1212	Recording devices shall be designed and arranged to automatically provide a permanent record of the incoming signal and date and time of receipt.	1212 See paragraph 1211 above.

Table F.2-1

Code Deviations (Continued)

CODE SECTION		POSITION
ARTICLE 200 - GENERAL		ARTICLE 200 - GENERAL
2022	Equipment: All devices, combination of devices, and equipment constructed and installed in conformity with this standard shall be approved for the purposes for which they are intended.	2022 The use of refurbished fire alarm system components is acceptable where the component has not been modified from its original design as certified by the refurbishing company and post-maintenance testing shows the device is fully functional. Under these limitations, the fire alarm system will still perform its design function.
		Certain smoke detector and control panel module combinations are "approved" equipment. See Reference F.7.6.bb.
ARTICLE 210 - WIRING		ARTICLE 210 - WIRING
2110	The installation of wiring and equipment shall be in accordance with Article 760, Fire Protective Signaling Systems of the National Electrical Code, NFPA No. 70 - 1975.	2110 Article 760 of the 1978 edition of the National Electric Code was used for the installation of wiring and equipment for the protective signaling system.

Table F.2-1

Code Deviations (Continued)

CODE SECTION		POSITION	
ARTICLE 220 - POWER SUPPLY SOURCES		ARTICLE 220 - POWER SUPPLY SOURCES	
2224	A separate power supply, independent of the main power supply, shall be provided for the operation of trouble signals. The secondary power supply may be used for this purpose.	2224	The plant fire alarm panels do not annunciate loss of ac power. Loss of ac power to the fire alarm equipment is annunciated on other panels located in the main control room.
2230	Power Supply for Remotely Located Control Equipment	2230	Power Supply for Remotely Located Control Equipment
2231	Additional power supplies when provided for control units, transmitters, or other equipment, essential to system operation, located remote from the central supervising station, shall comprise a primary (main), secondary (standby), and a trouble power supply which shall meet the same requirements as for the central supervising station power supplies. See Paragraphs 2220 through 2224.	2231	Each local fire control panel is provided with a single power supply.
2240	Light and Power Services	2240	Light and Power Services
2243	An overcurrent protective device of suitable current-carrying capacity and capable of interrupting the maximum short-circuit current to which it may be subjected shall be provided in each ungrounded conductor. The overcurrent protective device shall be enclosed in a locked or sealed cabinet located immediately adjacent to the point of connection to the light and power conductors.	2243	Cabinets are not locked or sealed but are located in access controlled areas.

Table F.2-1

Code Deviations (Continued)

CODE SECTION	POSITION
CHAPTER 3 - TYPES OF SIGNALING SERVICES	CHAPTER 3 - TYPES OF SIGNALING SERVICES
ARTICLE 340 - SPRINKLER SYSTEM WATERFLOW ALARM AND SUPERVISORY SIGNAL SERVICE	ARTICLE 340 - SPRINKLER SYSTEM WATERFLOW ALARM AND SUPERVISORY SIGNAL SERVICE
3444 Water storage containers shall be supervised to obtain two separate and distinctive signals, one indicating that the required water level has been lowered or increased and the other indicating restoration to the normal level. a. A pressure tank supervisory attachment shall indicate both high and low level conditions. A signal shall be obtained when the water level is lowered or raised 3 in. from the required level. b. A supervisory attachment for other than pressure tanks shall indicate a low level condition. A signal shall be obtained when the water level is lowered 12 in. from the required level.	3444 Fire water is supplied from the circulating water basin or the 400,000 gal bladder tank. The levels are inspected periodically.
3445 Water storage containers shall be supervised to obtain two separate and distinctive signals, one indicating that the temperature of the water has been lowered to 40°F, and the other indicating restoration to proper temperature.	3445 Fire water is supplied from the circulating water basin or the 400,000 gal bladder tank. The water temperature is not supervised or alarmed. The circulating water system is continuously recirculated. The bladder tank is provided with a manually initiated recirculation pump to prevent freezing.

Table F.2-1

Code Deviations (Continued)

CODE SECTION		POSITION	
ARTICLE 350 - AUTOMATIC SMOKE ALARM SERVICE		ARTICLE 350 - AUTOMATIC SMOKE ALARM SERVICE	
3540	Circuit Arrangement	3540	Circuit Arrangement
3541	A smoke detecting combination of a Class A Proprietary System shall be capable of operating for a smoke alarm signal during a single break or a single ground fault condition of the circuit wiring conductors (a) between the central supervising station and the smoke alarm signal transmitter and (b) between the smoke alarm signal transmitter and the smoke detector control unit, except as indicated in Paragraph 3542.	3541	Class A wiring is used only on detection wiring activating suppression systems in safety-related areas. All other circuits are Class B wiring including connections from local suppression panels to the fire control panel in the main control room. The Class A wiring, where provided, meets the requirements of this code section.
3542	The requirement of Paragraph 3541 does not apply to the circuits between the smoke alarm signal transmitter and the smoke detector control unit if both of these units are located in a common enclosure, or in adjacent enclosures not more than 3 ft apart and having the circuits between the enclosures run in conduit.	3542	Class A wiring is used only on detection wiring activating suppression systems in safety-related areas. All other circuits are Class B wiring including connections from local suppression panels to the fire control panel in the main control room. The Class A wiring, where provided, meets the requirements of this code section.

Table F.2-1

Code Deviations (Continued)

CODE SECTION		POSITION
NFPA 72E-1974		
CHAPTER 4 - SMOKE DETECTORS		CHAPTER 4 - SMOKE DETECTORS
4-4	Spacing	4-4 Spacing
4-4.2	Smooth Ceilings. On smooth ceilings, with no forced air flow, spacing of 30 feet may be used as a guide. In all cases, the manufacturer's recommendations shall be followed. Other spacing may be used depending on ceiling height, different conditions or response requirements.	4-4.2 Smooth Ceilings. Various plant locations have smoke detectors that exceed the manufacturers recommended spacing. These deviations have been evaluated and are acceptable (Reference F.7.6.o).
4-4.5	High Ceilings	4-4.5 High Ceilings
4-4.5.2	For proper protection for buildings with high ceilings, detectors shall be installed alternately at two levels; one half at ceiling level, and the other held at least 3 ft below the ceiling. See Figure A-4.5.4 of Appendix.	4-4.5.2 Smoke detectors are not installed at alternating levels on the ceilings. Intermediate level detectors are installed in the cable chase (radwaste control building).
4-4.6	Beam Construction. Beams 8 in. or less in depth can be considered equivalent to a smooth ceiling in view of the "spill over" effect of smoke. In beam construction over 8 in. in depth, movement of heated air and smoke may be slowed by the pocket or bay formed by the beams. In this case, spacing shall be reduced. If the beams exceed 18 in. in depth and are more than 8 ft on centers, each bay shall be treated as a separate area requiring at least one detector.	4-4.6 Beam Construction. Various plant locations have smoke detectors that are close to beams and other large obstructions and have bays deeper than 18 inches without a smoke detector. These deviations have been evaluated and are acceptable (Reference F.7.6.o).

Table F.2-1

Code Deviations (Continued)

CODE SECTION		POSITION	
	NFPA 80-1974		
1-5	Classifications and Types of Doors	1-5	Classification and Types of Doors
1-5.1.1	Only labeled doors shall be used.	1-5.1.1	CGS has various specialty doors in fire barriers which are not labeled for fire. These doors are required to meet other design considerations associated with a nuclear facility. Specialty doors include flood, airtight, radiation shielding, low- and high-range blast and bullet resistance. These nonlabeled door types have been previously approved by the NRC (Reference F.7.4.c).
2-1	Swinging Doors with Builders Hardware	2-1	Swinging Doors with Builders Hardware
2-1.5.1	Only labeled steel door frames shall be used. The requirements to be a labeled door implies that there are no untested frame modifications, such as frame holes, which void the label.	2-1.5.1	Only labeled hollow metal steel door frames are used; however, where nonfactory frame holes are present, grout may be installed inside the frame at the area of the frame defect. Grouted frames do not void the frame laboratory label.
2-1.5.4	The clearance between the door and the frame and between meeting edges of doors swinging in pairs shall not exceed 1/8 in. The clearance between the bottom of the door and the floor surface shall not exceed 0.75 in. regardless of the existence of a raised sill or threshold.	2-1.5.4	The clearance between the door and frame and between double doors may exceed NFPA 80 dimensions by 0.125 in. Door bottom clearance can exceed NFPA 80 dimensions by 0.25 in. Industry fire testing has shown that similar construction fire doors meet a 3-hr fire rating with the above clearances. See Reference F.7.5.r.
2-1.7.4.5	A closing device shall be installed on every fire door except elevator and power-operated dumbwaiter doors.	2-1.7.4.5	Various specialty fire doors are not equipped with automatic closing devices. The presence and design of specialty doors has been previously approved by the NRC and ANI. See above. Note: the complete list of NFPA 80-1974 deviations for specialty doors in fire barriers is not further listed here.

Table F.2-1

Code Deviations (Continued)

CODE SECTION		POSITION	
2-9	Access Doors	2-9	Access Doors
2-9.2.2	When installed in a vertical surface, access doors shall be self-closing. This shall be accomplished by use of a closer or by top hinging to provide gravity closing.	2-9.2.2	Fire doors R413 and R610 are elevated equipment access doors that are only used for large equipment removal and are normally locked. Thus, periodic verification of self-closing is not performed.
4-1	General Care and Maintenance	4-1	General Care and Maintenance
4-1-3	Doors, shutters, and windows shall be operable at all times. They shall be kept closed and latched or arranged for automatic closing.	4-1.3	Fire doors D104, D105, and D107 may not always self-close due to differential pressure. These doors are equipped with strobe lights and are monitored by security.

F.3 COMPLIANCE WITH FIRE PROTECTION REGULATORY DOCUMENTS

Branch Technical Position (BTP) APCSB 9.5-1, Appendix A, Guidelines for Fire Protection for Nuclear Power Plants Docketed Prior to July 1, 1976, provides guidance on the preferred alternatives for fire protection design for nuclear power plants for which applications for construction permits were docketed prior to July 1, 1976. Table F.3-1 provides a comparison of the Columbia Generating Station (CGS) fire protection program to BTP APCSB 9.5-1 Appendix A. The comparison describes how the CGS fire protection program implements the BTP recommendations.

10 CFR 50 Appendix R, "Fire Protection Program for Nuclear Power Facilities Operating Prior to January 1, 1979" provides guidance on various topics not addressed BTP APCSB 9.5-1 Appendix A including ensuring the ability to achieve and maintain post-fire safe shutdown. Table F.3-2 provides a comparison of the CGS fire protection program to 10 CFR 50 Appendix R and describes how the CGS fire protection program implements alternatives to the Appendix R guidelines.

See Section F.1.2 for the regulatory significance of BTP APCSB 9.5-1 Appendix A and 10 CFR 50 Appendix R.

Table F.3-1

Comparison with BTP 9.5-1 Appendix A

BTP 9.5-1 APPENDIX A	CGS FIRE PROTECTION PROGRAM
A. OVERALL REQUIREMENTS FOR NUCLEAR PLANT FIRE PROTECTION PROGRAM	A. OVERALL REQUIREMENTS FOR NUCLEAR PLANT FIRE PROTECTION PROGRAM
A.1 Personnel	A.1 Personnel
Responsibility for the overall fire protection program should be assigned to a designated person in the upper level of management. This person should retain ultimate responsibility even though formulation and assurance of program implementation is delegated. Such delegation of authority should be to staff personnel prepared by training and experience in fire protection and nuclear plant safety to provide a balanced approach in directing the fire protection programs for nuclear power plants. The qualification requirements for the fire protection engineer or consultant who will assist in the design and selection of equipment, inspect and test the completed physical aspects of the system, develop the fire protection program, and assist in the fire-fighting training for the operating plant should be stated. Subsequently, the FSAR should discuss the training and the updating provisions such as fire drills provided for maintaining the competence of the station fire-fighting and operating crew, including personnel responsible for maintaining and inspecting the fire protection equipment.	The Chief Nuclear Officer is the management official responsible for the adequacy of implementation and effectiveness of the fire protection program at the facility. The Plant Fire Marshal serves as the principal point of contact for the plant fire protection program. The position responsibilities include ensuring that the fire protection administrative controls for fire protection system/component testing, maintenance, and remedial actions are adequately implemented, monitoring plant activities and plant condition for fire prevention and combustible controls, and ensuring the plant fire brigade is adequately trained, staffed, and equipped. Energy Northwest staff includes an engineer meeting the qualifications listed in Section 13.1.3.3.3. The qualified Fire Protection Engineer is delegated the responsibility for ensuring the technical adequacy of elements of the fire protection program. This responsibility is implemented through the review of proposed fire protection program changes, design changes, and procedure changes. The qualified fire protection engineer is also responsible for the assessment of the effectiveness of the fire protection programs in support of the Plant General Manager.
The fire protection staff should be responsible for a. coordination of building layout and systems design with fire area requirements, including consideration of potential hazards associated with postulated design basis fires. b. design and maintenance of fire detection, suppression, and extinguishing systems. c. fire prevention activities. d. training and manual fire-fighting activities of plant personnel and the fire brigade.	
Note: NFPA 6 - Recommendations for Organization of Industrial Fire Loss Prevention, contains useful guidance for organization and operation of the entire fire loss prevention program.	

Table F.3-1

Comparison with BTP 9.5-1 Appendix A (Continued)

BTP 9.5-1 APPENDIX A	CGS FIRE PROTECTION PROGRAM
A.2 Design Basis	A.2 Design Basis
The overall fire protection program should be based upon evaluation of potential fire hazards throughout the plant and the effect of postulated design basis fires related to maintaining ability to perform safety shutdown functions and minimize radioactive releases to the environment.	The overall fire protection program is based on evaluation of potential fire hazards throughout the plant relative to maintaining the ability to safely shut down the plant and minimize the releases of radioactivity to the environment. See Section F.4 for the Columbia Generating Station (CGS) fire hazards analysis.
A.3 Backup	A.3 Backup
Total reliance should not be placed on a single automatic fire suppression system. Appropriate backup fire suppression capability should be provided.	Automatic fire suppression systems have been installed in areas where there are significant fire hazards. Automatic suppression systems are backed up by hose stations and portable fire extinguishers distributed throughout the plant.
A.4 Single Failure Criterion	A.4 Single Failure Criterion
A single failure in the fire suppression system shall not impair both the primary and backup fire suppression capability. For example, redundant fire water pumps with independent power supplies and controls should be provided. Postulated fires or fire protection system failures need not be considered concurrent with other plant accidents or the most severe natural phenomena.	A combination of design features provides fire protection in the event of fire protection system component failures.
The effects of lightning strikes should be included in the overall plant fire protection program.	

Malfunction	Consequences
Electric fire pump motor failure	Second electric fire pump on separate power supply
Electric fire pumps fail due to loss of offsite power.	Two diesel fire pumps available - one 2000 gpm and one 2500 gpm
Water source low water level (no makeup)	Primary fire pumps are supplied from the circ water pump house, second diesel fire pump is supplied from separate water supply.
Yard pipe rupture	Isolate portion of main loop header using sectionalizing valves.
System pipe rupture	Isolate using system isolation valve. Use backup hose from standpipe and/or hydrants.

Table F.3-1

Comparison with BTP 9.5-1 Appendix A (Continued)

BTP 9.5-1 APPENDIX A	CGS FIRE PROTECTION PROGRAM
System alarm check valve fails to open	Use manual fire fighting equipment (hoses and portable extinguishers)
Detection system wire short	Trouble alarm in control room
Loss of offsite power to detection system	Detection system is provided with backup power from an uninterruptible power supply.
Fire dampers	All fire dampers serving rooms containing safety-related equipment are qualified to Seismic Category I.

The plant is provided with redundant fire pumps which supply water to the fire water supply loop from two separate water supplies (see paragraph E.2.c.).

The fixed water suppression system and the backup fire hose station are connected to the same riser in the following safety-related areas:

a. Main control room emergency filter units (with standpipe cross-connection),

b. Standby gas treatment filter units, and

c. Reactor building sump vent filter units

These combination systems are permitted under NFPA 14-1974. A pipe rupture coincident with a fire is not, however, considered credible as the pipe is a passive component.

Lightning rods and steel towers are used to minimize the potential for lightning-caused fires. The reactor building and stacks are equipped with a lightning protection system. Air terminals are installed and spaced along the roof in accordance with NFPA 78-1975. The vent stack lightning protection

Table F.3-1

Comparison with BTP 9.5-1 Appendix A (Continued)

BTP 9.5-1 APPENDIX A	CGS FIRE PROTECTION PROGRAM
	mast, the communications and fire protection masts, and the air terminals are bonded to structural steel and/or heavy copper conductors which connect directly to the plant ground grid. The height of the reactor building and its installed air terminals provide zones of protection for the diesel generator building and the safety-related portions of the radwaste/control building. The metal wall panels of the turbine building are grounded directly to the structural steel, which in turn is bonded to the plant ground grid.
A.5 Fire Suppression Systems	A.5 Fire Suppression Systems
Failure or inadvertent operation of the fire suppression system should not incapacitate safety-related systems or components. Fire suppression systems that are pressurized during normal plant operation should meet the guidelines specified in APCSB Branch Technical Position 3-1, "Protection Against Postulated Piping Failures in Fluid Systems Outside Containment."	The safety-related areas which have fixed fire suppression systems include the following: a. The standby gas treatment (SGT) filter units in the reactor building are provided with manually activated water spray that is operated from the main control room. b. The cable spreading room in the radwaste control building has an automatic preaction system. c. The diesel generator building has an automatic preaction system installed to protect each diesel generator, day tank, and oil transfer pump room. d. The main control room emergency filter units in the radwaste control building have manually actuated water spray systems within the units. e. The radwaste control building cable chase and portions of the diesel generator corridor and the radwaste-reactor building corridor have an automatic preaction system. f. The control room power generation control complex (PGCC) subfloor sections longitudinal cable ducts have automatic Halon 1301 systems.

Table F.3-1

Comparison with BTP 9.5-1 Appendix A (Continued)

BTP 9.5-1 APPENDIX A	CGS FIRE PROTECTION PROGRAM
	g. The control room office areas have automatic sprinkler protection. The deluge spray systems for the SGT filter units and the control room emergency filter units are actuated by remote manual action to prevent inadvertent wetting. The redundant units are physically separated and would remain operable. A failure or inadvertent operation of a preaction sprinkler system in the cable spreading room, cable chase, or in the diesel generator building would not incapacitate the safety-related systems as two actions would be required for water to be released: the feed mains and lines must be flooded and the sprinkler heads must be fused. Failure or inadvertent operation of the PGCC Halon 1301 system does not incapacitate safety-related systems. Fire suppression systems that are pressurized during normal plant operation meet the guidelines specified in BTP ASB 3-1. Potential flooding due to failure of the fire protection system piping has been included in plant flooding analyses.
A.6 Fuel Storage Areas The fire protection program (plans, personnel, and equipment) for buildings storing new reactor fuel and for adjacent fire zones which could affect the fuel storage zone should be fully operational before fuel is received on the site. Schedule for implementation of modifications, if any, will be established on a case-by-case basis.	A.6 Fuel Storage Areas The fire protection program for all fuel storage areas was fully operational when fuel was received at the site.
A.7 Fuel Loading The fire protection program for an entire reactor unit should be fully operational prior to initial fuel loading in that reactor unit. Schedule for implementation of modifications, if any, will be established on a case-by-case basis.	A.7 Fuel Loading The fire protection programs for the entire power unit were fully operational prior to initial fuel loading.

Table F.3-1

Comparison with BTP 9.5-1 Appendix A (Continued)

BTP 9.5-1 APPENDIX A	CGS FIRE PROTECTION PROGRAM
A.8 Multiple-Reactor Sites	A.8 Multiple-Reactor Sites
On multiple-reactor sites where there are operating reactors and construction of remaining units is being completed, the fire protection program should provide continuing evaluation and include additional fire barriers, fire protection capability, and administrative controls necessary to protect the operating units from construction fire hazard. The superintendent of the operating plant should have the lead responsibility for site fire protection.	CGS is not a multiple-reactor site.
A.9 Simultaneous Fires	A.9 Simultaneous Fires
Simultaneous fires in more than one reactor need not be postulated, where separation requirements are met. A fire involving more than one reactor unit need not be postulated except for facilities shared between units.	CGS is not a multiple reactor site.
B. ADMINISTRATIVE PROCEDURES, CONTROLS, AND FIRE BRIGADE	B. ADMINISTRATIVE PROCEDURES, CONTROLS, AND FIRE BRIGADE
B.1 Administrative procedures consistent with the need for maintaining the performance of the fire protection system and personnel in nuclear power plants should be provided.	B.1 Administrative procedures for maintaining performance of fire protection systems and personnel are provided.
Guidance is contained in the following publications:	The listed NFPA codes have been superseded. The current equivalent NFPA codes may be used as guidance.
NFPA 4 - Organization for Fire Services	
NFPA 4A - Organization for Fire Department	
NFPA 6 - Industrial Fire Loss Prevention	
NFPA 7 - Management of Fire Emergencies	
NFPA 8 - Management Responsibility for Effects of Fire on Operations	
NFPA 27 - Private Fire Brigades	

Table F.3-1

Comparison with BTP 9.5-1 Appendix A (Continued)

	BTP 9.5-1 APPENDIX A		CGS FIRE PROTECTION PROGRAM
B.2	Effective administrative measures should be implemented to prohibit bulk storage of combustible materials inside or adjacent to safety-related buildings or systems during operation or maintenance periods. Regulatory Guide 1.39, "Housekeeping Requirements for Water-Cooled Nuclear Power Plants," provides guidance of housekeeping, including the disposal of combustible materials.	B.2	Administrative procedures for housekeeping and fire protection control the introduction of combustible materials into the plant.
B.3	Normal and abnormal conditions or other anticipated operations such as modifications (e.g., breaking fire stops, impairment of fire detection and suppression systems) and refueling activities should be reviewed by appropriate levels of management for appropriate special actions and procedures such as fire watches or temporary fire barriers implemented to assure adequate fire protection and reactor safety. In particular: a. Work involving ignition sources such as welding and flame cutting should be done under closely controlled conditions. Procedures governing such work should be reviewed and approved by persons trained and experienced in fire protection. Persons performing and directly assisting in such work should be trained and equipped to prevent and combat fires. If this is not possible, a person qualified in fire protection should directly monitor the work and function as a fire watch. b. Leak testing and similar procedures such as air flow determinations should use one of the commercially available aerosol techniques. Open flames or combustion generated smoke should not be permitted.	B.3	Normal and abnormal conditions and other anticipated operations and refueling activities are reviewed by management for appropriate special actions. Primary implementing procedures are listed in Section F.7.8. In particular: a. Work involving ignition sources is done under controlled conditions and procedures governing such work will be reviewed and approved by persons trained and experienced in fire protection. Persons performing and assisting in such work are trained and equipped to prevent and control fires. Qualified personnel monitor the work and act as fire watch. b. Leak testing uses instrumentation or soapy water. Smoke detector testing may use aerosol cans. Open flames or combustion generated smoke are not permitted.

Table F.3-1

Comparison with BTP 9.5-1 Appendix A (Continued)

	BTP 9.5-1 APPENDIX A	CGS FIRE PROTECTION PROGRAM
	c. Use of combustible material, e.g., HEPA and charcoal filters, dry ion exchange resins or other combustible supplies, in safety-related areas should be controlled. Use of wood inside buildings containing safety-related systems or equipment should be permitted only when suitable non-combustible substitutes are not available. If wood must be used, only fire retardant treated wood (scaffolding, lay down blocks) should be permitted. Such materials should be allowed into safety-related areas only when they are to be used immediately. Their possible and probable use should be considered in the fire hazard analysis to determine the adequacy of the installed fire protection systems.	c. Provisions have been made for controlling the use of combustible materials in safety-related areas. Use of wood in the permanent structure of buildings containing safety-related systems or equipment is not permitted except when suitable non-combustible substitutes are not available. If wood is used only pressure impregnated fire retardant or fire retardant coated wood is permitted. The use of minor amounts of transient untreated wood is not considered a significant hazard. For more than minor amounts in safety-related areas, additional compensating measures are implemented as necessary. d. Equipment or supplies shipped in untreated combustible packaging containers may be unpacked in safety-related areas if required for operating reasons. All combustible packing materials are removed from the area as soon as practicable after the unpacking.
B.4	Nuclear power plants are frequently located in remote areas, at some distance from public fire departments. Also, first response fire departments are often volunteer. Public fire department response should be considered in the overall fire protection program. However, the plant should be designed to be self-sufficient with respect to fire fighting activities and rely on the public response only for supplemental or backup capability.	The plant is designed to be self-sufficient with respect to fire-fighting activities. The plant fire brigade is trained in fire-fighting procedures. Supplemental fire-fighting capability is available from the local fire department. Interagency agreements delineate the responsibilities and duties of the local fire department during a coordinated response.
B.5	The need for good organization, training and equipping of fire brigades at nuclear power plant sites requires effective measures be implemented to assure proper discharge of these functions. The guidance in Regulatory Guide 1.101, “Emergency Planning of Nuclear Power Plants,” should be followed as applicable.	See the CGS Emergency Plan.

Table F.3-1

Comparison with BTP 9.5-1 Appendix A (Continued)

BTP 9.5-1 APPENDIX A	CGS FIRE PROTECTION PROGRAM
a. Successful fire-fighting requires testing and maintenance of the fire protection equipment, emergency lighting, and communication, as well as practice as brigades for the people who must utilize the equipment. A test plan that lists the individuals and their responsibilities in connection with routine tests and inspections of the fire detection and protection systems should be developed. The test plan should contain the types, frequency and detailed procedures for testing. Procedures should also contain instructions on maintaining fire protection during those periods when the fire protection system is impaired or during periods of plant maintenance, e.g., fire watches or temporary hose connections to water systems.	Procedures have been prepared for the testing and maintenance of the fire protection equipment, emergency lighting, and communication equipment. Procedures list responsibilities in connection with routine tests and inspections of the fire detection and protection systems. Procedures for compensatory measures are implemented when fire systems are impaired.
b. Basic training is a necessary element in effective fire fighting operation. In order for a fire brigade to operate effectively, it must operate as a team. All members must know what their individual duties are. They must be familiar with the layout of the plant and equipment location and operation in order to permit effective firefighting operations during times when a particular area is filled with smoke or is insufficiently lighted. Such training can only be accomplished by conducting drills several times a year (at least quarterly) so that all members of the fire brigade have had the opportunity to train as a team, testing itself in the major areas of the plant. The drills should include the simulated use of equipment in each area and should be preplanned and post-critiqued to establish the training objective of the drills and determine how well these objectives have been met. These drills should periodically (at least annually) include local fire department	The plant fire brigade composition is described in Section 13.1.2.3.4. The fire brigade training requirements are described in Section 13.2.2.5.

Table F.3-1

Comparison with BTP 9.5-1 Appendix A (Continued)

BTP 9.5-1 APPENDIX A	CGS FIRE PROTECTION PROGRAM
participation where possible. Such drills also permit supervising personnel to evaluate the effectiveness of communications within the fire brigade and with the on-scene fire team leader, the reactor operator in the control room, and the offsite command post.	
c. To have proper coverage during all phases of operation, members of each shift crew should be trained in fire protection. Training of the plant fire brigade should be coordinated with the local fire department so that responsibilities and duties are delineated in advance. This coordination should be part of the training course and implemented into the training of the local fire department staff. Local fire departments should be educated in the operational precautions when fighting fires on nuclear power plant sites. Local fire departments should be made aware of the need for radioactive protection of personnel and the special hazards associated with a nuclear power plant site.	
d. NFPA 27, "Private Fire Brigade," should be followed in organization, training, and fire drills. This standard also is applicable for the inspection and maintenance of fire fighting equipment. Among the standards referenced in this document, the following should be utilized: NFPA 194, "Standard for Screw Threads and Gaskets for Fire Hose Couplings," NFPA 196, "Standards for Fire Hose," NFPA 197, "Training Standard on Initial Fire Attacks," NFPA 601, "Recommended Manual of Instructions and Duties for the Plant Watchman on Guard." NFPA booklets and pamphlets listed on page 27-11 of Volume 8, 1971-72, are also applicable for good training references. In addition, courses in fire	

Table F.3-1

Comparison with BTP 9.5-1 Appendix A (Continued)

BTP 9.5-1 APPENDIX A	CGS FIRE PROTECTION PROGRAM
prevention and fire suppression which are recognized and/or sponsored by the fire protection industry should be utilized.	
C. QUALITY ASSURANCE PROGRAM	C. QUALITY ASSURANCE PROGRAM
C.1 Design Control and Procurement Document Control	C.1 Design Control and Procurement Document Control
Measures should be established to assure that all design-related guidelines of the Branch Technical Position are included in design and procurement documents and that deviations therefrom are controlled.	At the time BTP APCSB 9.5-1 was issued, the basic design of all fire protection equipment and systems had been completed. The established engineering procedures require the design and design changes to be reviewed by cognizant personnel to ensure material, parts, and equipment specified will meet or exceed the design criteria. Design and design changes are incorporated into design and/or procurement documents which contain requirements that deviations be documented and controlled. Design and procurement activities are audited and reviewed on a scheduled and surveilled basis.
C.2 Instructions, Procedures, and Drawings	C.2 Instructions, Procedures, and Drawings
Inspections, tests, administrative controls, fire drills, and training that govern the fire protection program should be prescribed by documented instructions, procedures, or drawings and should be accomplished in accordance with these documents.	Specifications are prepared, when required, to define design requirements. Instructions, procedures, and drawings additionally define and implement fire protection requirements. Contractors/suppliers are requested to provide instructions, procedures, or drawings as stipulated by contract/procurement documents. During plant operation, the fire protection program and those portions of the fire protection systems which are designated as essential fire protection systems (see LCS 1.10) are subject to the applicable portions of the CGS Operational Quality Assurance Program Description (OQAPD).
C.3 Control of Purchased Material, Equipment, and Services	C.3 Control of Purchased Material, Equipment, and Services
Measures should be established to assure that purchased material, equipment, and services conform to the procurement documents.	Contractors/suppliers are required to provide inspection and/or test documentation as stipulated by contract/procurement documents. Identification and traceability requirements are included in procurement documents as required. Source surveillance and/or receiving inspection will depend on the degree of design control applied.

Table F.3-1

Comparison with BTP 9.5-1 Appendix A (Continued)

BTP 9.5-1 APPENDIX A	CGS FIRE PROTECTION PROGRAM
C.4 Inspection	C.4 Inspection
A program for independent inspection of activities affecting fire protection should be established and executed by, or for, the organization performing the activity to verify conformance with documented installation drawings and test procedures for accomplishing the activities.	Purchase orders/contracts are reviewed to provide applicable quality assurance requirements. Source surveillance and/or receiving inspections are performed depending on the degree of design control applied. Plant quality control or cognizant field engineering performs inspection/surveillance, as required, to ensure compliance with fire protection requirements.
C.5 Test and Test Control	C.5 Test and Test Control
A test program should be established and implemented to assure that testing is performed and verified by inspection and audit to demonstrate conformance with design and system readiness requirements. The tests should be performed in accordance with written test procedures; test results should be properly evaluated and acted on.	During construction, contractors performing installation and tests were required to perform inspections which ensured system readiness were performed in accordance with approved procedures. Additionally, these contractors were subject to surveillance and/or audit for compliance to fire protection requirements. Modifications to installations are required to be tested to ensure system readiness using approved procedures.
C.6 Inspection, Test, and Operating Status	C.6 Inspection, Test, and Operating Status
Measures should be established to provide for the identification of items that have satisfactorily passed required tests and inspections.	All items received are identified to ensure proper traceability and status. This traceability is sufficiently ensured during installation and test. A system of tagging is used during operations to establish operating status or to prevent inadvertent operation.
C.7 Non-Conforming Items	C.7 Non-Conforming Items
Measures should be established to control items that do not conform to specified requirements to prevent inadvertent use or installation.	Inspection procedures require that items that do not conform to specified requirements be tagged and segregated to prevent inadvertent installation.
C.8 Corrective Action	C.8 Corrective Action
Measures should be established to assure that conditions adverse to fire protection, such as failures, malfunctions, deficiencies, deviations, defective components, uncontrolled combustible material and non-conformances are promptly identified, reported, and corrected.	Those portions of the fire protection system which are designated as essential fire protection systems (see LCS 1.10) are subject to the applicable portions of the CGS OQAPD. Plant procedures require that conditions adverse to fire protection, such as failures, malfunctions, deficiencies, deviations, defective components, uncontrolled combustible material, and nonconformances are promptly identified, reported, and corrected.

Table F.3-1

Comparison with BTP 9.5-1 Appendix A (Continued)

BTP 9.5-1 APPENDIX A	CGS FIRE PROTECTION PROGRAM
C.9 Records	C.9 Records
Records should be prepared and maintained to furnish evidence that the criteria enumerated above are being met for activities affecting the fire protection program.	During design and construction, the quality assurance program required vendors and contractors to prepare and maintain documents indicating compliance with quality assurance requirements. During operations, documents indicating compliance with quality assurance requirements are prepared in accordance with the applicable portions of the CGS OQAPD.
C.10 Audits	C.10 Audits
Audits should be conducted and documented to verify compliance with the fire protection program including design and procurement documents; instructions; procedures and drawings; and inspection and test activities.	During design and construction, a surveillance/audit program was implemented to include design and procurement documents, instructions, procedures, and drawings; inspection, and test activities. Procurement documents were reviewed for application of source surveillance requirements. Site contractors were subject to surveillance/audit to ensure compliance to fire protection requirements. Audits are performed in accordance with the OQAPD.
D. GENERAL GUIDELINES FOR PLANT PROTECTION	D. GENERAL GUIDELINES FOR PLANT PROTECTION
D.1 Building Design	D.1 Building Design
D.1.a Plant layouts should be arranged to: a. Isolate safety-related systems from unacceptable fire hazards, and b. Alternatives: 1. redundant safety-related systems that are subject to damage from a single fire hazard should be protected by a combination of fire retardant coatings and fire detection and suppression systems, or 2. a separate system to perform the safety function should be provided.	D.1.a Those portions of redundant systems which are required for post-fire safe shutdown are protected in accordance with 10 CFR 50 Appendix R, Section III.G, as detailed in Section F.4. Safety-related equipment which is not required for post-fire safe shutdown is generally separated to minimize potential risk from a single fire hazard. Cabling for the safety-related equipment which is not required for post-fire safe shutdown is routed in accordance with divisional electrical separation requirements (Section 8.3), not in accordance with Appendix R commitments, and could be subject to damage from a single exposure fire. Fire area boundaries serve to separate fire hazards from safety-related systems.
D.1.b In order to accomplish 1.(a) above, safety-related systems and fire hazards	D.1.b In designing the plant, careful consideration has been given to equipment location, fire walls,

Table F.3-1

Comparison with BTP 9.5-1 Appendix A (Continued)

	BTP 9.5-1 APPENDIX A	CGS FIRE PROTECTION PROGRAM
	should be identified throughout the plant. Therefore, a detailed fire hazard analysis should be made. The fire hazards analysis should be reviewed and updated as necessary. Additional fire hazards analysis should be done after any plant modification.	barriers, material selection, and fire protection system design. A fire hazards analysis is included in Section F.4. Proposed plant modifications are evaluated for impact on the validity of the fire hazards analysis. Revisions to the fire hazards analyses are performed as required.
D.1.c	For multiple reactor sites, cable spreading rooms should not be shared between reactors. Each cable spreading room should be separated from other areas of the plant by barriers (walls and floors) having a minimum fire resistance of three hr. Cabling for redundant safety divisions should be separated by walls having three hour fire barriers.	CGS is not a multiple reactor site. The cable spreading room is separated from other fire areas by 3-hr barriers.
D.1.d	Interior wall and structural components, thermal insulation materials and radiation shielding materials and sound-proofing should be non-combustible. Interior finishes should be non-combustible or listed by a nationally recognized testing laboratory, such as Factory Mutual or Underwriters' Laboratory, Inc. for flame spread, smoke and fuel contribution of 25 of less in its use configuration (ASTM E-84 Test, "Surface Burning Characteristics of Building Materials"). Alternative guidance for constructed plants is shown in Section E.3 "Cable Spreading Room".	Interior wall and structural components, thermal insulation materials on piping and HVAC duct, and some radiation shielding materials are noncombustible. Silicone impregnated tungsten and blanket radiation shielding are combustible, but are administratively controlled in Reference F.7.8.e. Decontaminable coatings have flame spreads less than 25. Paint on concrete or masonry block is not considered a fire hazard. Auxiliary rooms within the main control room and the north wall of the radwaste control room have plastic laminate faced wall panels. The plastic laminate faced wall panels are UL listed for a flame spread of 25 and a smoke developed rating of 40. The materials in these rooms are not, however, considered to present a significant fire hazard. The combustibility of Thermo-Lag 330-1 has been considered in the fire hazards analysis.

Table F.3-1

Comparison with BTP 9.5-1 Appendix A (Continued)

	BTP 9.5-1 APPENDIX A		CGS FIRE PROTECTION PROGRAM
			The combustible containment barrier spacer material is shielded from fire exposure by ceramic fiber in the annular gap of mechanical containment penetrations. See Section F.2.2.5 for more details. Shielding material installed within access doors at certain penetrations in the primary containment sacrificial shield wall is under the trade name of "Permali." Flame spread and smoke contribution are both under 25.
D.1.e	Metal deck roof construction should be noncombustible (see the building materials directory of the Underwriters' Laboratory, Inc.) or listed as Class I by Factory Manual System Approval Guide. Where combustible material is used in metal deck roofing design, acceptable alternatives are (i) replace combustibles with non-combustible materials, (ii) provide an automatic sprinkler system, or (iii) provide ability to cover roof exterior and interior with adequate water volume and pressure.	D.1.e	All metal deck roof systems meet the requirements of Factory Mutual Class I insulated steel roof decks.
D.1.f	Suspended ceilings and their supports should be of non-combustible construction. Concealed spaces should be devoid of combustibles. Adequate fire detection and suppression systems should be provided where full implementation is not practicable.	D.1.f	Suspended ceilings and their supports are of noncombustible construction. Within the control room, there are no exposed combustibles in concealed spaces above the suspended ceilings. All electrical cable above the suspended ceiling is routed in conduit. Cable trays are routed above the suspended ceilings of the 487-ft radwaste chemistry laboratory.
D.1.g	High voltage - high amperage transformers installed inside buildings containing safety related systems should be of the dry type or insulated and cooled with non-combustible liquid. Safety related systems that are exposed to flammable oil filled transformers should be protected from the effects of a fire by: (i) replacing with dry transformers or transformers that are insulated and	D.1.g	All high voltage transformers installed inside safety-related building areas are cooled with high flash point insulating fluid. The indoor river makeup transformers are enclosed in 3-hr barriers without automatic suppression. Fire Areas RC-8 and RC-14, containing the radwaste building 467-ft switchgear room transformers, are enclosed in 3-hr barriers without automatic suppression.

Table F.3-1

Comparison with BTP 9.5-1 Appendix A (Continued)

	BTP 9.5-1 APPENDIX A	CGS FIRE PROTECTION PROGRAM
	cooled with non-combustible liquid; or (ii) enclosing the transformer with a three-hour fire barrier and installing automatic water spray protection.	
D.1.h	Buildings containing safety related systems, having openings in exterior walls closer than 50 ft to flammable oil filled transformers should be protected from the effects of a fire by: (i) closing of the opening to have fire resistance equal to three hr (ii) constructing a three-hour barrier between the transformers and the wall openings; or (iii) closing the openings and providing the capability to maintain a water curtain in case of fire.	D.1.h There are no oil-filled transformers located within 50 ft of the exterior wall of a safety-related building. The main step-up transformers, the normal auxiliary transformers, the startup auxiliary power transformers, and the backup auxiliary power transformers are oil filled and located within 50 ft north of the turbine generator building. They are protected by deluge sprinklers. The turbine generator building wall is 2-hr rated reinforced concrete and insulated metal panel with 1.5-hr fire-rated doors. Fire barrier walls are installed between the main transformers E-TR-M1, E-TR-M2, E-TR-M3 and E-TR-M4. There are no barriers between other north yard transformers. Four additional oil-filled transformers are located in the cooling tower area. The RRC pump ASD transformers are protected by deluge systems. The adjacent RRC pump ASD building wall is 2-hr rated and turbine building wall is 3-hr rated. A 2-hr barrier separates the divisional transformers.
D.1.i	Floor drains, sized to remove expected fire fighting water flow, should be provided in those areas where fixed water fire suppression systems are installed. Drains should also be provided in other areas where hand hose lines may be used if such fire fighting water could cause unacceptable damage to equipment in the area. Equipment should be installed on pedestals, or curbs should be provided as required to contain water and direct it to floor drains. See NFPA 92M, "Waterproofing and Draining of Floors." Drains in areas	D.1.i Floor drains for the turbine oil reservoir, turbine lube oil storage, and hydrogen seal oil rooms discharge into sumps. There are no floor drains in the diesel generator day tank rooms. The floor drain systems in areas where fixed fire protection systems are located are not sized adequately to accept the large quantity of water which could be discharged over a long period of time. Flooding may be relieved through open doorways.

Table F.3-1

Comparison with BTP 9.5-1 Appendix A (Continued)

BTP 9.5-1 APPENDIX A	CGS FIRE PROTECTION PROGRAM
containing combustible liquids should have provisions for preventing the spread of the fire throughout the drain system. Water drainage from areas which may contain radioactivity should be sampled and analyzed before discharge to the environment.	Potential actuation of fire protection systems has been evaluated to ensure that it would not adversely affect any safety-related equipment by flooding. Most equipment has been installed on raised concrete pads or pedestals.
In operating plants or plants under construction, if accumulation of water from the operation of new fire suppression systems does not create unacceptable consequences, drains need not be installed.	The NFPA 92M expectation for periodic inspection of barriers for possible leak paths is implemented for the fire/flood barriers addressed in Information Notice 88-60 (see Reference F.7.6.q). Water flowing down stairwells or into elevator shafts will not degrade safety-related equipment. All drains empty into sumps which are divided into radioactive and nonradioactive sumps according to the areas served. See FSAR 9.3.3.2.2 and FSAR 11.2.2.2.2 radioactive floor drain systems and FSAR 9.3.3.2.3 for nonradioactive floor drain system. In all buildings where fixed fire suppression systems or hand hose stations are actuated and flooding does occur, water could ultimately flow into the basement area and cover the sumps and floor. a. Areas where no or little radiation is present, the excessive quantity of water will dilute any possible contamination. This water could be pumped into the yard by portable equipment after the fire is suppressed. b. Areas where contaminated particles are prevalent, which have had flooding, must have the floor area monitored. 1. Non-contaminated water could be pumped into the yard.

Table F.3-1

Comparison with BTP 9.5-1 Appendix A (Continued)

	BTP 9.5-1 APPENDIX A		CGS FIRE PROTECTION PROGRAM
			2. Contaminated water would be left in the basement until the sump can be reactivated to discharge the water to the radwaste floor drain collection tank. As indicated above, temporary flooding beyond the drainage system provided is possible if water is discharged for extended periods.
D.1.j	Doors, walls, and ceilings enclosing separate fire areas should have minimum fire rating of 3 hr. Penetrations in these fire barriers, including conduits and piping, should be sealed or closed to provide a fire resistance rating at least equal to that of the fire barrier itself. Door openings should be protected with equivalent rated doors, frames and hardware that have been tested and approved by a nationally recognized laboratory. Such doors should be normally closed and locked or alarmed with alarm and annunciation in the control room. Penetrations for ventilation system should be protected by a standard "fire door damper" where required. Refer to NFPA 80, "Fire Doors and Windows." The fire hazard in each area should be evaluated to determine barrier requirements. If barrier fire resistance cannot be made adequate, fire detection and suppression should be provided, such as: (i) water curtain in case of fire (ii) flame retardant coatings (iii) additional fire barriers	D.1.j	See Section F.2.2 and LCS 1.10.5 for a description of building construction and fire rated assemblies.
D.2	Control of Combustibles	D.2	Control of Combustibles
D.2.a	Safety-related systems should be isolated or separated from combustible materials. When this is not possible because of the nature of the safety system or the combustible material, special protection	D.2.a	Safety-related systems have been isolated or separated from combustible materials to the extent possible. The emergency diesel generator fuel oil day tanks are located in separate rooms with 3-hr fire-rated walls and

Table F.3-1

Comparison with BTP 9.5-1 Appendix A (Continued)

	BTP 9.5-1 APPENDIX A	CGS FIRE PROTECTION PROGRAM
	should be provided to prevent a fire from defeating the safety system function. Such protection may involve a combination of automatic fire suppression, and construction capable of withstanding and containing a fire that consumes all combustibles present. Examples of such combustible materials that may not be separable from the remainder of its system are: (1) Emergency diesel generator fuel oil day tanks, (2) Turbine-generator oil and hydraulic control fluid systems, (3) Reactor coolant pump lube oil system.	3-hr fire-rated door assemblies. The turbine generator oil reservoir and coolers and hydraulic control reservoir and coolers are separated from each other by fire-rated walls and are protected by deluge sprinkler system. The turbine-generator oil reservoir coolers are open to the turbine-generator operating floor but the opening is protected by a deluge sprinkler system. The feedwater pump rooms are not separated by fire barriers but are protected by deluge systems. The reactor recirculation pumps are not protected by an automatic fire suppression system since the containment is inerted. Reactor recirculation, pump bearing temperature and oil level and containment temperature and pressure are monitored.
D.2.b	Bulk gas storage (either compressed or cryogenic), should not be permitted inside structures housing safety-related equipment. Storage of flammable gas such as hydrogen, should be located outdoors or in separate detached buildings so that a fire or explosion will not adversely affect any safety related systems or equipment. Refer to NFPA 50A, "Gaseous Hydrogen Systems." Care should be taken to locate high pressure gas storage containers with the long axis parallel to building walls. This will minimize the possibility of wall penetration in the event of a container failure. Use of compressed gases (especially flammable and fuel gases) inside buildings should be controlled. Refer to NFPA 5, "Industrial Fire Loss Prevention."	D.2.b A separate building, remote from the main buildings of the plant, is provided for bulk storage of hydrogen bottles. The location is north of the turbine generator building such that a fire or explosion would not affect safety-related buildings or equipment. The building is of noncombustible construction and complies with NFPA Standard 50A (1973). The storage facility consists of a three-sided elevated building with louvers to ensure proper ventilation. All bottles are stored in a vertical position. The hydrogen supply piping is installed inside a culvert to ensure proper protection of the hydrogen line. All electrical equipment within the hydrogen storage facility is rated for installation in a hazardous area Class I, Division II, Group B. The hydrogen storage facility has an elaborate grounding system. These precautions minimize the occurrence of fires and explosions. The hydrogen gas supply system is shown in Figures 1.2-2 and 10.2-4. The Hydrogen Water Chemistry (HWC) Hydrogen Storage and Supply Facility (HSSF), a separate and remote facility, provides bulk storage of both liquid and gaseous hydrogen for hydrogen injection into the

Table F.3-1

Comparison with BTP 9.5-1 Appendix A (Continued)

BTP 9.5-1 APPENDIX A	CGS FIRE PROTECTION PROGRAM
	condensate/feedwater system to mitigate Intergranular Stress Corrosion Cracking (IGSCC) in the internals of the reactor vessel. The HSSF is located approximately 430 yards southeast of the Sewage Treatment Plant Blower and Laboratory Building (Building #24 on Figure 1.2-1). This outdoor non-safety-related facility meets the siting considerations of EPRI NP-5283-SR-A and is far removed from the main plant buildings, such that a fire or explosion at the HSSF would not affect plant safety-related buildings or equipment. The HSSF is designed to comply with NFPA 30-2000, NFPA 50A-1999, NFPA 50B-1999, and NFPA 70-2002. The storage facility consists of a 14,000-gallon liquid hydrogen storage tank, two redundant liquid hydrogen pumps and ambient air vaporizers, six high-pressure gas hydrogen storage tubes, a back-up hydrogen gas tube trailer assembly, a 1,500-gallon liquid nitrogen storage tank, and two redundant ambient air nitrogen vaporizers for system purging. The HSSF is supplied from plant power, is designed for lightning protection, and the grounding grid is connected to the site grid. All electrical equipment installed in high hazardous areas meet the requirements of NFPA 70-2002. In the yard area of the plant, the buried hydrogen supply line is encased in a guard pipe that provides mechanical protection and a means to monitor the pipe for leakage. The vent of the guard pipe is directed to a hydrogen detector outside the TG building. The hydrogen supply pipe is routed through the Turbine Generator Building 441' west end, which is not a safety-related plant area. The HSSF isolation and monitoring devices alarm at the Remote Annunciator Panel, located in the plant chemistry lab (RW 487'). HSSF is equipped with UV/IR flame sensors that isolate the hydrogen supply and alarm at both the Remote Annunciator Panel and

Table F.3-1

Comparison with BTP 9.5-1 Appendix A (Continued)

BTP 9.5-1 APPENDIX A	CGS FIRE PROTECTION PROGRAM
	Control Room. The hydrogen supply lines are equipped with excess flow check valves to shut off the gas flow in the event of a pipe break. The hydrogen supply system incorporates hydrogen leak detectors at non-welded pipe connections within Fire Area TG-1. The HWC system is automatically shut down upon receipt of a high-high hydrogen signal from these hydrogen leak detectors. These design features minimize the occurrence of fires and explosions. Minimum amounts of compressed gases are permanently stored in safety-related buildings where the gases are required for system functioning. These are limited to the following: - Nitrogen - 2% hydrogen in argon - 2% hydrogen in nitrogen - 6% hydrogen in argon - 2% oxygen in argon - 6% oxygen in argon - Freon - 10% methane in argon - Propane - Helium - Scott air pack bottles With the exception of the air pack bottles, the compressed gases are stored in a vertical position and are seismically restrained. The air pack bottles are stored horizontally, but do not present a hazard to any safety-related equipment. The other types of compressed gas bottles do not present explosive hazards. Temporary use of flammable and fuel compressed gases is controlled by plant procedures.

Table F.3-1

Comparison with BTP 9.5-1 Appendix A (Continued)

	BTP 9.5-1 APPENDIX A		CGS FIRE PROTECTION PROGRAM
D.2.c	The use of plastic materials should be minimized. In particular, halogenated plastics such as polyvinyl chloride (PVC) and neoprene should be used only when substitute non-combustible materials are not available. All plastic materials, including flame and fire retardant materials, will burn with an intensity and BTU production in a range similar to that of ordinary hydrocarbons. When burning, they produce heavy smoke that obscures visibility and can plug air filters, especially charcoal and HEPA. The halogenated plastics also release free chlorine and hydrogen chloride when burning, which are toxic to humans and corrosive to equipment.	D.2.c	The use of plastic materials, in particular halogenated plastics, are minimized to the extent practical. See response to paragraph D.3.f.
D.2.d	Storage of flammable liquids should, as a minimum, comply with the requirements of NFPA 30, "Flammable and Combustible Liquids Code."	D.2.d	Flammable liquids, as defined in NFPA 30-1973, are not used in plant systems. The storage of combustible liquids in plant systems conforms to the requirements of NFPA 30-1973. See Table F.2-1 and item F.9 for approved NFPA 30 deviations. Flammable/combustible liquids for incidental used in maintenance and operations are normally stored in accordance with NFPA 30. Exceptions may be authorized by special handling permits in accordance with plant procedures. Note that the storage restrictions within a fire area are implemented using the NFPA 30 definition of fire area(s) - not the fire area boundaries as defined for the purpose of post-fire safe shutdown analysis.
D.3	Electric Cable Construction, Cable Trays, and Cable Penetrations	D.3	Electric Cable Construction, Cable Trays, and Cable Penetrations
D.3.a	Only non-combustible material should be used for cable tray construction.	D.3.a	All cable trays, covers, their supports, and hardware are constructed of non-combustible material.
D.3.b	See section E3 for fire protection guidelines for cable spreading rooms.	D.3.b	See paragraph E.3 below.

Table F.3-1

Comparison with BTP 9.5-1 Appendix A (Continued)

	BTP 9.5-1 APPENDIX A		CGS FIRE PROTECTION PROGRAM
D.3.c	Automatic water sprinkler systems should be provided for cable trays outside the cable spreading room. Cables should be designed to allow wetting down with deluge water without electrical faulting. Manual hose stations and portable hand extinguishers should be provided as backup. Safety-related equipment in the vicinity of such cable trays, that does not itself require water fire protection, but is subject to unacceptable damage from sprinkler water discharge, should be protected from sprinkler system operation or malfunction. When safety-related cables do not satisfy the provisions of Regulatory Guide 1.75, all exposed cables should be covered with an approved fire retardant coating and a fixed automatic water fire suppression system should be provided.	D.3.c	Spacial separation or electrical separation barriers have been provided between redundant safety-related cable trays as described in Section 8.3. Fixed water suppression systems for all such cable trays outside the cable spreading room are, therefore, considered unnecessary. The cable spreading room and the cable chase in the radwaste/control building and the radwaste-reactor building corridor, however, contain redundant safety-related cables in trays and are located such that the heat resulting from a fire could not be dissipated. Therefore, these areas are provided with automatic water sprinkler systems even where the plant divisional separation guidelines are met. Manual hose stations and portable extinguishers are available for backup. All hose stations are equipped with fog nozzles. Use of these fog nozzles is not likely to cause unacceptable damage to any safety-related equipment when used by trained personnel in the prescribed manner. 2-½ in. hose monitors do have the capability to go solid stream and would not be used on interior energized electrical equipment fires.
D.3.d	Cable and cable tray penetration of fire barriers (vertical and horizontal) should be sealed to give protection at least equivalent to that fire barrier. The design of fire barriers for horizontal and vertical cable trays should, as a minimum, meet the requirements of ASTM E-119, “Fire Test of Building Construction and Materials,” including the hose stream test.	D.3.d	Cable and cable tray penetrations in fire barriers are sealed with a fire rating equivalent to that of the penetrated area unless fire protection evaluation has justified a lesser fire rating. Nongrouted electrical penetration seals designs through fire rated barriers are fire rated based on the criteria established in Reference F.7.6.b (which uses the ASTM E-119 time temperature curve).

Table F.3-1

Comparison with BTP 9.5-1 Appendix A (Continued)

	BTP 9.5-1 APPENDIX A		CGS FIRE PROTECTION PROGRAM
	Where installed penetration seals are deficient with respect to fire resistance, these seals may be protected by covering both sides with an approved fire retardant material. The adequacy of using such material should be demonstrated by suitable testing.		
D.3.e	Fire breaks should be provided as deemed necessary by the fire hazards analysis. Flame or flame retardant coatings may be used as a fire break for grouped electrical cables to limit spread of fire in cable ventings. Possible cable derating owing to use of such coating materials must be considered during design.	D.3.e	Thermo-Lag and Flamemastic coated cable tray fire breaks have been abandoned in place (Reference F.7.6.e). Where long vertical run trays breach nonrated barriers, silicone foam seals which fill the entire blockout are maintained as fire breaks. Where coating materials are used on cables, derating of cables is considered in the design.
D.3.f	Electric cable constructions should as a minimum pass the current IEEE No. 383 flame test. This does not imply that cables passing this test will not require additional fire protection. For cable installation in operating plants and plants under construction that do not meet the IEEE No. 383 flame test requirements, all cables must be covered with an approved flame retardant coating and properly derated.	D.3.f	All safety-related cabling meets the IEEE 383-1974 flame test requirements. Generally, cabling within plant cable trays, cable penetrations, and enclosures meets IEEE 383-1974 flame test requirements. Certain lighting circuits and low energy wiring within plant control panels, racks, and other electrical enclosures do not meet the IEEE 383-1974 requirements. The use of polyvinyl chloride (PVC) cabling is minimized. Where IEEE 383 rated cable is not available for a particular application, cable procured to meet National Electric Code guidelines for fire resistance for plenum rated cabling using NFPA 262-1990, UL 910-985, or equivalent may be used.
D.3.g	To the extent practical, cable construction that does not give off corrosive gases while burning should be used. Applicable to new cable installations.	D.3.g	Cables are generally jacketed with a cross-linked polyolephin (XLPE) material which gives off as little corrosive gas as practical. The use of polyvinyl chloride (PVC) cabling is minimized.

Table F.3-1

Comparison with BTP 9.5-1 Appendix A (Continued)

	BTP 9.5-1 APPENDIX A		CGS FIRE PROTECTION PROGRAM
D.3.h	Cable trays, raceways, conduit, trenches, or culverts should be used only for cables. Miscellaneous storage should not be permitted, nor should piping for flammable or combustible liquids or gases be installed in these areas. Installed equipment in cable tunnels or culverts need not be removed if they present no hazard to the cable runs as determined by the fire hazards analysis.	D.3.h	Cable trays, raceways, and conduits are used only for cables. There are no cable tunnels or culverts in the plant. There are no provisions for miscellaneous storage in cable areas, nor are flammable or combustible liquids or gases installed in these areas.
D.3.i	The design of cable tunnels, culverts and spreading rooms should provide for automatic or manual smoke venting as required to facilitate manual fire fighting capability.	D.3.i	There are no cable tunnels or culverts in the plant. Air from the cable spreading room normally passes into the cable chase through openings protected by 3-hr fire-rated dampers and then back to a ventilation unit. Smoke detectors spaced through both areas and a smoke detector, mounted in the ductwork, monitor the return air. On actuation of the detector, an alarm sounds in the control room. The control room operator can then shut down the ventilation unit. As the cable spreading room and cable chase are each protected by an automatic preaction sprinkler system designed for cable tray fire extinguishment, a fire would be of limited duration. Smoke from a fire would be purged through the actuation of a fixed exhaust fan and ductwork and discharged directly to the atmosphere. The use of fans and ducting to discharge smoke to the atmosphere would help maintain visibility in both the cable chase and the cable spreading room.
D.3.j	Cables in the control room should be kept to the minimum necessary for operation of the control room. All cables entering the control room should terminate there. Cables should not be installed in floor trenches or culverts in the control room.	D.3.j	The main control room is composed mainly of a “panel assembly” system. Each “panel assembly” consists of a termination cabinet, a subfloor section (with enclosed, segregated ducts for cable routing), and a vertical panel and/or benchboard assembly.

Table F.3-1

Comparison with BTP 9.5-1 Appendix A (Continued)

BTP 9.5-1 APPENDIX A	CGS FIRE PROTECTION PROGRAM
Existing cabling installed in concealed floor and ceiling spaces should be protected with an automatic total flooding Halon system.	A raised floor is provided for the entire room. The "panel assembly" subfloor sections comprise a major portion of this false floor. Panel assembly ducts, termination cabinet cable entrance/exit areas, and vertical panel and benchboard assembly cable entrance/exit areas are located beneath the false floor. Most cables entering the room enter the termination cabinets directly. They are either terminated there or route directly to vertical panels or benchboards for termination. Some cables enter the false floor outside the "panel assemblies." They then route either into the panel assemblies, or to other control room equipment not a part of the "panel assembly" system (lighting panels, relay panels, etc.). A Halon extinguishing system is provided for the subfloor sections longitudinal cable ducts. Seals for Halon containment are provided at the entrance and exit points to the ducts. All penetrations into the main control room are provided with fire-rated seals. Cables entering the false floor outside the "panel assemblies" are enclosed in rigid steel conduit, metallic flexible conduit (with the outer jacket removed), covered metal troughs, Haveg Siltemp tape, or suitable fire resistive cable as identified in NFPA 70 for under raised floors. All cables in the suspended ceiling area are enclosed in conduit. For this reason, an automatic flooding system is not deemed necessary.

Table F.3-1

Comparison with BTP 9.5-1 Appendix A (Continued)

BTP 9.5-1 APPENDIX A	CGS FIRE PROTECTION PROGRAM
D.4 Ventilation	D.4 Ventilation
D.4.a The products of combustion that need to be removed from a specific fire area should be evaluated to determine how they will be controlled. Smoke and corrosive gases should generally be automatically discharged directly outside to a safe location. Smoke and gases containing radioactive materials should be monitored in the fire area to determine if release to the environment is within the permissible limits of the plant Technical Specifications. The products of combustion which need to be removed from a specific fire area should be evaluated to determine how they will be controlled.	D.4.a Products of combustion are removed from specific areas by two methods, as follows: a. Areas with direct duct connections to the exhaust system discharge directly to the atmosphere. These areas are: 1. Turbine generator building a) Reactor feed pump rooms b) Mechanical vacuum pump rooms c) Auxiliary boiler room 2. Reactor building a) LPCS pump room b) RHR pump rooms c) RCIC pump room d) HPCS pump room e) CRD pump room 3. Diesel generator building a) Diesel oil day tank rooms b) Diesel generator rooms c) Diesel oil transfer pump rooms d) Air compressors and electrical equipment rooms 4. Circulation water pump house b. Areas of the plant to which air is supplied and return air is routed to other areas of higher potential radioactivity prior to final exhaust are: 1. Turbine generator building (a) Turbine oil reservoir and conditioner room (b) H_2 seal oil unit room (c) Turbine lube oil storage room (d) General area containing (1) Service and instrument air compressors (2) Condensate pumps (3) Condensate booster pumps (4) Turbine oil transfer lines (5) Cables

Table F.3-1

Comparison with BTP 9.5-1 Appendix A (Continued)

BTP 9.5-1 APPENDIX A	CGS FIRE PROTECTION PROGRAM
	2. Reactor building general area containing (a) SLC pumps (b) Cables (c) Standby gas treatment units (d) Sump vent filter units 3. Radwaste building general area containing (a) Exhaust air filter units (b) Cables Exhaust air from the reactor, radwaste, and turbine generator buildings is monitored to determine the quantity of radioactive material being released to the environment. Smoke removal equipment, such as a fixed and a portable fan and flexible ducting are available in the radwaste/control and reactor buildings to aid in smoke removal. The basic air flow patterns were established by exhausting directly from potentially contaminated areas, as well as indirectly by inducing air from nonpotentially contaminated areas into shielded areas before discharging to the atmosphere. See Section F.2.5.5 for more details on smoke removal. Fire dampers were provided in ducting and wall penetrations to protect areas containing large quantities of combustibles or redundant post-fire safe shutdown systems against the postulated fires according to the severity of the fire as determined by the fire loading in the hazards analysis. The portable fan and ducting provide the latitude of allowing the existing fire barrier dampers to remain in a closed position while exhausting the impeding smoke from the fire area.

Table F.3-1

Comparison with BTP 9.5-1 Appendix A (Continued)

	BTP 9.5-1 APPENDIX A		CGS FIRE PROTECTION PROGRAM
D.4.b	Any ventilation system designed to exhaust smoke or corrosive gases should be evaluated to ensure that inadvertent operation or single failures will not violate the controlled areas of the plant design. This requirement includes containment functions for protection of the public and maintaining habitability for operations personnel.	D.4.b	All ventilation systems designed to exhaust smoke and corrosive gases are functioning during normal plant operation with the exception of the SGT units and the portable smoke removal units. Standby fans are available for backup operation of the ventilation systems in the reactor, radwaste, and turbine generator buildings. Inadvertent operation or single failures of these units will not violate safety requirements for the plant personnel or the public.
D.4.c	The power supply and controls for mechanical ventilation systems should be run outside the fire area served by the system.	D.4.c	The power supply and controls for mechanical ventilation systems have not always been run outside the fire areas served by the system. The fire hazards analysis demonstrates that post-fire safe shutdown capability is not jeopardized by this cable routing.
D.4.d	Fire suppression systems should be installed to protect charcoal filters in accordance with Regulatory Guide 1.52, "Design Testing and Maintenance Criteria for Atmospheric Cleanup Air Filtration."	D.4.d	Fire suppression systems have been installed in the safety-related standby gas treatment filter unit, control room emergency filter unit, and the reactor sump vent filter unit in accordance with Regulatory Guide 1.52. The offgas system charcoal units are contained in eight ASME, Section III, Class 3 coded vessels in the radwaste building. They are not protected by a fire suppression system. Valving, however, breaks the tanks down into groups that can be closed off to eliminate oxygen thereby extinguishing a fire. The probability of flame spread from the units is considered small and they are well separated from safety-related circuits and components.
D.4.e	The fresh air supply intakes to areas containing safety related equipment or systems should be located remote from the exhaust air outlets and smoke vents of other fire areas to minimize the possibility of contaminating the intake air with the products of combustion.	D.4.e	The fresh air supply intakes to areas containing safety-related equipment or systems are located with sufficient separation from exhaust air outlets and smoke vents to minimize the possibility of contaminating the intake air with products of combustion.

Table F.3-1

Comparison with BTP 9.5-1 Appendix A (Continued)

BTP 9.5-1 APPENDIX A	CGS FIRE PROTECTION PROGRAM
D.4.f Stairwells should be designed to minimize smoke infiltration during a fire. Staircases should serve as escape routes and access routes for fire fighting. Fire exit routes should be clearly marked. Stairwells, elevators and chutes should be enclosed in masonry towers with minimum fire rating of three hr and automatic fire doors at least equal to the enclosure construction, at each opening into the building. Elevators should not be used during fire emergencies.	D.4.f Enclosed fire rated stairwells and elevators provide either a 2-hr or 3-hr fire rating, with 1.5 hr minimum fire doors. See Figures F.6-1 through F.6-5. Door T207 to the service building roof is nonrated. Enclosed fire rated stairwells are not equipped with ventilation and would effectively limit smoke infiltration. Elevators are not typically used for egress during fire emergencies.
D.4.g Smoke and heat vents may be useful in specific areas such as cable spreading rooms and diesel fuel oil storage areas and switchgear rooms. When natural-convection ventilation is used, a minimum ratio of 1 sq. ft of venting area per 200 sq. ft of floor area should be provided. If forced-convection ventilation is used, 300 CFM should be provided for every 200 sq. ft of floor area. See NFPA No. 204 for additional guidance on smoke control.	D.4.g Provisions for smoke and heat relief are discussed in paragraphs D.3.i and D.4.a above. In areas where smoke and heat are removed by the normal ventilation systems, a minimum of 300 cfm is provided for every 200 ft^2 of floor area except in the following areas:

Area	Ventilation per 200 ft^2	Supplementary Ventilation Equipment
Safety-Related Areas		
HPCS pump room	251 cfm	Portable fan flex duct
RHR-2A pump room	148 cfm	Portable fan-flex-duct
RHR-2B pump room	127 cfm	Portable fan-flex-duct
SGT-general area	207 cfm	Portable fan-flex-duct
D.O. transfer pump room	278 cfm	Portable fan-flex-duct
Cable spreading rooms	24 cfm[a]	Fixed fan-flex-duct
Control room	0 cfm	Fixed fan-flex duct
Control bldg. mech. duct equipment room	0 cfm	Fixed fan-flex duct
Cable chase	205 cfm	Fixed fan-flex duct

Table F.3-1

Comparison with BTP 9.5-1 Appendix A (Continued)

BTP 9.5-1 APPENDIX A		CGS FIRE PROTECTION PROGRAM		
		Non-Safety-Related Areas		
		Turbine L.O. storage room	277 cfm	Portable fan-flex duct
		TG operating floor[b]	274 cfm	Portable fan-flex duct
		[a] 1000 cfm purge air. [b] Roof vents are not provided.		
		Portable and fixed fans with flexible ducting are provided to allow smoke removal from rooms in which additional ventilation is required.		
D.4.h	Self-contained breathing apparatus, using full face positive pressure masks, approved by NIOSH (National Institute of Occupational Safety and Health - approval formerly given by the US Bureau of Mines) should be provided for fire brigade, damage control, and control room personnel. Control room personnel may be furnished breathing air by a manifold.	D.4.h	Provisions have been made to ensure that adequate self-contained breathing apparatus (SCBA) are available for fire fighting, damage control personnel, and control room operating personnel. These units are independent of respiratory protective equipment provided for general plant activities. See Table F.3-2 of Section III.H for more SCBA requirements.	
D.4.i	Where total flooding gas extinguishing systems are used, area intake and exhaust ventilation dampers should close upon initiation of gas flow to maintain necessary gas concentration. See NFPA 12, "Carbon Dioxide Systems," and 12A, "Halon 1301 Systems."	D.4.i	The total flooding Halon 1301 system for the main control room PGCC ducts does not require closure of any ventilation dampers to maintain necessary gas concentration.	
D.5	Lighting and Communication	D.5	Lighting and Communication	
D.5.a	Fixed emergency lighting should consist of sealed beam units with individual 8-hour minimum battery power supplies.	D.5.a	Fixed emergency lighting for egress consists of 1.5-hr Life Safety and Appendix R 8-hr emergency lights consisting of fixed emergency battery units, portable lanterns and diesel backed normal-emergency AC lights. Eight-hour portable lanterns are staged to perform post-fire safe shutdown manual actions outside the control room. See Section 9.5.3.2.4 for emergency lighting systems.	

Table F.3-1

Comparison with BTP 9.5-1 Appendix A (Continued)

	BTP 9.5-1 APPENDIX A		CGS FIRE PROTECTION PROGRAM
			In critical areas, such as the Main Control Room, emergency lighting is installed and powered from the emergency buses which are supplied by the diesel generators. All plant areas, which must be manned for post-fire safe shutdown and all associated access/egress routes, have been provided with adequate lighting such that any required operator actions can be accomplished. The plant emergency lighting systems are further described in Section 9.5.3.
D.5.b	Suitable sealed-beam battery powered portable hand lights should be provided for emergency use.	D.5.b	Suitable sealed-beam, battery-powered portable hand lights have been provided.
D.5.c	Fixed emergency communication should use voice powered head sets at preselected locations.	D.5.c	Voice powered head sets are provided throughout the plant at preset locations.
D.5.d	Fixed repeaters installed to permit use of portable radio communication units should be protected from exposure fire damage.	D.5.d	The in-plant radio repeater is located in Fire Area DG-10 which has fire detection and is isolated from major fire hazards by 3-hr fire barriers. The fire brigade leader communicates with the fire brigade members using radios. The fire brigade leader communicates with the control room or the remote shutdown room using either radios or PBX phones. Certain PBX phones are credited for post-fire safe shutdown activities. The specific actions that require PBX communications are listed in Reference F.7.3.d. See Sections F.2.6.2, 9.5.2 and LCS 1.10.8 for more detail. The PBX communication system for post-fire safe shutdown credits the PBX battery (E-B0-PBX) for 8 hours of operation following a loss of off-site power even though the system has a diesel generator backup.

Table F.3-1

Comparison with BTP 9.5-1 Appendix A (Continued)

	BTP 9.5-1 APPENDIX A		CGS FIRE PROTECTION PROGRAM
E.	FIRE DETECTION AND SUPPRESSION	E.	FIRE DETECTION AND SUPPRESSION
E.1	Fire Detection	E.1	Fire Detection
E.1.a	Fire detection systems should as a minimum comply with NFPA 72D, "Standard for Installation, Maintenance and Use of Proprietary Protective Signaling Systems." Deviations from the requirements of NFPA 72D should be identified and justified.	E.1.a	The fire detection system conforms to NFPA 72D for a Class B designation with the following exceptions: detection circuits that actuate fire suppression systems in safety-related areas are Class A. Incoming signals to the control room fire panel are manually recorded. CGS employs a pre-alarm detection system which sounds an alarm signal in the control room only. The control room operator manually sounds a building wide alarm over the public address system. All signals to the control room are identified by zones which designate the building, floor, and cause of alarm. A manual push button radio fire alarm reporter is used to transmit an alarm to the offsite fire department. Pre-alarm detectors are installed according to UL recommendations and spacing, except as justified in Table F.2-1. Certain testing which would require entry into high radiation areas may not be performed during power operation. See Section F.2 for further discussion of the fire detection system.
E.1.b	Fire detection system should give audible and visual alarm and annunciation in the control room. Local audible alarms should also sound at the location of the fire.	E.1.b	Fire detection systems provide audible and visual alarms in the control room. Plant-wide alarms and public address announcements are initiated by the main control room operator in accordance with emergency procedures.
E.1.c	Fire alarms should be distinctive and unique. They should not be capable of being confused with any other plant system alarms.	E.1.c	Fire alarms are distinctive and unique from all other plant system alarms.
E.1.d	Fire detection and actuation systems should be connected to the plant emergency power supply.	E.1.d	Fire detection and actuation systems are connected to power panels which are supplied by uninterruptible power supplies.

Table F.3-1

Comparison with BTP 9.5-1 Appendix A (Continued)

BTP 9.5-1 APPENDIX A		CGS FIRE PROTECTION PROGRAM	
E.2	Fire Protection Water Supply System	E.2	Fire Protection Water Supply System
E.2.a	An underground yard fire main loop should be installed to furnish anticipated fire water requirements, NFPA 24 - Standard for Outside Protection - gives necessary guidance for such installation. It references other design codes and standards developed by such organizations as the American National Standards Institute (ANSI) and the American Water Works Association (AWWA). Lined steel or cast iron pipe should be used to reduce internal tuberculation. Such tuberculation deposits in an unlined pipe over a period of years can significantly reduce water flow through the combination of increased friction and reduced pipe diameter. Means for treating and flushing the systems should be provided. Approved visually indicating sectional control valves, such as post indicator valves, should be provided to isolate portions of the main for maintenance or repair without shutting off the entire system. The fire main system piping should be separate from service or sanitary water system piping. Visible location marking signs for underground valves is acceptable. Alternative valve position indicators should also be provided. For operating plants, fire main system piping that can be isolated from service or sanitary water system piping is acceptable.	E.2.a	The underground yard fire main circles the plant. NFPA 24-1973 was used as the design code. The fire main is constructed of 12-in. ductile iron, cast iron, and steel pipe. The underground pipe, valves, and fittings have an applied coating of bituminous material with a minimum thickness of 1 mil. The interior coating on ductile iron and cast iron piping conforms to the requirements of ANSI A21.4. All underground valves in the fire main loop have post indicators for visual indication and to isolate portions of the fire main. The underground fire main is periodically flushed. The fire protection water system is independent of the domestic system. See F.2.4.1 for other plant system interfaces.

Table F.3-1

Comparison with BTP 9.5-1 Appendix A (Continued)

	BTP 9.5-1 APPENDIX A	CGS FIRE PROTECTION PROGRAM
E.2.b	A common yard fire main loop may serve multi-unit nuclear power plant sites if cross-connected between units. Sectional control valves should permit maintaining independence of the individual loop around each unit. For such installations, common water supplies may also be utilized. The water supply should be sized for the largest single expected flow. For multiple reactor sites with widely separated plants (approaching 1 mile or more), separate yard fire main loops should be used. Sectionalized systems are acceptable.	CGS is not a multiple reactor site.
E.2.c	If pumps are required to meet system pressure or flow requirements, a sufficient number of pumps should be provided so that 100% capacity will be available with one pump inactive (e.g., three 50% pumps or two 100% pumps). The connection to the yard fire main loop from each fire pump should be widely separated, preferably located on opposite sides of the plant. Each pump should have its own driver with independent power supplies and control. At least one pump (if not powered from the emergency diesels) should be driven by nonelectrical means, preferably diesel engine. Pumps and drivers should be located in rooms separated from the remaining pumps and equipment by a minimum 3-hr fire wall. Alarms indicating pump running, driver availability, or failure to start should be provided in the control room. Details of the fire pump installation should as a minimum conform to NFPA 20, "Standard for the Installation of Centrifugal Fire Pumps."	Fire pumps are required to meet the fire protection system pressure and flow requirements. This system design has been accepted by the insuring authority. Three fire pumps, each with a flow rate of 2000 gpm, are located in the circulating water pump house and draw water from the circulating water pump house basin. This is the primary source of water for fire protection. Two of the pumps are electrically driven and powered from separate electrical buses. The third pump is powered by its own diesel engine. The three pumps are spatially separated with approximately 23 ft between electric pumps and 30 ft between the nearest electric driven pump and the diesel driven pump. The pump house hall is protected by a fixed sprinkler system. The pumps and drivers are elevated above the floor by concrete pedestals thus floor drainage is not a concern. Each pump is capable of supplying 100% of the fire water flow rate except under the following conditions: a. Due to the complexity of cable tray routing in the cable chase and cable spreading rooms, two pumps are required to meet the fire water system design requirements, and

Table F.3-1

Comparison with BTP 9.5-1 Appendix A (Continued)

BTP 9.5-1 APPENDIX A		CGS FIRE PROTECTION PROGRAM	
		b. The 100% pump flow rate capacity would be limited to the fixed system and two interior hoses. If exterior hoses are used, there would be a slight reduction in system and hose densities. Two supply lines run parallel to each other from the circulating water pump house fire pumps to the south side of the plant fire water supply loop where they connect to the loop with a 10-ft separation. A back up diesel-driven fire pump rated at 2500 gpm is provided and located in the filtration building. The pump draws water from a 400,000 gal bladder tank. It discharges into the north side of the plant fire water supply loop. NFPA 20-1974 was used for design guidance in the fire pump installation. The fire pumps are UL listed and Factory Mutual approved. Alarms indicating pump running and power failure malfunction are provided for each pump in the main control room.
E.2.d	Two separate reliable water supplies should be provided. If tanks are used, two 100% (minimum of 300,000 gal each) system capacity tanks should be installed. They should be so interconnected that pumps can take suction from either or both. However, a leak in one tank or its piping should not cause both tanks to drain. The main plant fire water supply capacity should be capable of refilling either tank in a minimum of 8 hr. Common tanks are permitted for fire and sanitary or service water storage. When this is done, however, minimum fire water storage requirements should be dedicated by means of a vertical standpipe for other water services.	E.2.d	Two separate reliable water supplies are provided (see Figure F.6-21). The primary water supply is the circulating water pump house basin. The circulating water basin is not dedicated to fire protection, but is a reliable water volume (Reference F.7.3.dd). The water level in the basin is monitored and it provides 100% of the fire water supply as defined in paragraph E.2.e. Should the quantity of water drop to a low level an alarm signals the Control Room operator to initiate the makeup water pumps. Excluding a loss-of-offsite power, an inexhaustible quantity of makeup water can be supplied to the basin at the rate of 12,500 to 25,000 gpm from the cooling tower makeup water system from the Columbia River. Water is returned to the basin from the cooling towers by gravity feed. At the low level, the total

Table F.3-1

Comparison with BTP 9.5-1 Appendix A (Continued)

BTP 9.5-1 APPENDIX A		CGS FIRE PROTECTION PROGRAM
		water available to the fire pumps in the basin and its gravity fed tributary piping is greater than 300,000 gal. A backup water supply is provided by a 400,000 gal bladder tank which provides 100% of the fire water supply as defined in paragraph E.2.e. It has a dedicated water supply of 284,640 gal. The bladder tank can be refilled in approximately 8 hr. The primary water supply volume is at the circulating water pump house basin and the secondary water supply tank is FP-TK-110. Figure F.6-21 shows the two fire water supplies are at opposite sides of the site. Based on this large separation, interconnection of the two fire water supplies is not practical.
E.2.e	The fire water supply (total capacity and flow rate) should be calculated on the basis of the largest expected flow rate for a period of two hr, but not less than 300,000 gallons. This flow rate should be based (conservatively) on 1000 gpm for manual hose stream plus the greater of: a. all sprinkler heads opened and flowing in the largest designed fire area; or b. the largest open head deluge system(s) operating.	E.2.e The requirement of 1000 gpm for manual hose streams has been reduced to 500 gpm by BTP CMEB 9.5.1 (NUREG-0800). The fire protection system water supply is designed to meet the water flow demand assuming the shortest leg of the fire main loop is inoperable. The required water supply of 284,640 gal is based on a 2-hr flow period for the largest demand of a sprinkler system in a safety-related area of 2372 gpm (sprinkler demand for the cable spread room which includes 500 gpm for hose streams). See also paragraph E.2.d.
E.2.f	Lakes or fresh water ponds of sufficient size may qualify as sole source of water for fire protection, but require at least two intakes to the pump supply. When a common water supply is permitted for fire protection and the ultimate heat sink, the following should also be satisfied:	E.2.f Two sources of water are provided for fire protection. See paragraph E.2.d above. The fire water supply is independent of the ultimate heat sink.

Table F.3-1

Comparison with BTP 9.5-1 Appendix A (Continued)

	BTP 9.5-1 APPENDIX A		CGS FIRE PROTECTION PROGRAM
	a. The additional fire protection water requirements are designed into the total storage capacity; and b. Failure of the fire protection system should not degrade the function of the ultimate heat sink.		
E.2.g	Outside manual hose installation should be sufficient to reach any location with an effective hose stream. To accomplish this, hydrants should be installed approximately every 250 feet on the yard main system. The lateral to each hydrant from the yard main should be controlled by a visually indicating or key operated (curb) valve. A hose house, equipped with hose and combination nozzle, and other auxiliary equipment recommended in NFPA 24, "Outside Protection," should be provided as needed but at least every 1000 ft. Threads compatible with those used by local fire departments should be provided on all hydrants, hose couplings and standpipe risers.	E.2.g	The yard fire main loop includes hydrants installed approximately every 300 ft. Each hydrant has a post indicating control valve (see Figure F.6-21). A mobile fire response vehicle is equipped with the equivalent of three hose houses (see Table F.2-1). This provides sufficient hose so that a single fire at any plant location can be reached by an effective hose stream. A combination fog shut-off type hose nozzle is provided. Threads are compatible with those used by the local fire department.
E.3.a	Each automatic sprinkler system and manual hose station standpipe should have an independent connection to the plant underground water main. Headers fed from each end are permitted inside buildings to supply multiple sprinkler and standpipe systems. When provided, such headers are considered an extension of the yard main system. The header arrangement should be such that no single failure can impair both the primary and backup fire protection systems. Each sprinkler and standpipe system should be equipped with OS&Y (outside screw and yoke) gate valve, or other approved shut off valve, and water flow alarm. Safety related equipment that does not itself require sprinkler water fire protection, but is subject	E.3.a	Each automatic sprinkler system does not have an independent connection to the fire main loop. Sectionalizing valves have been installed in the yard loop to isolate impairments. Standpipes in the radwaste/control and diesel generator buildings have been interconnected with other standpipes so that a single failure would not impair systems protecting safety-related equipment. See paragraph A.4 above for further discussion of the single failure criterion. Each sprinkler and standpipe system within the permanent plant island is controlled by an OS&Y gate valve or other approved shut-off valve. Alarm type check or deluge valves are installed as required in each sprinkler system and cause an alarm in the control

Table F.3-1

Comparison with BTP 9.5-1 Appendix A (Continued)

	BTP 9.5-1 APPENDIX A		CGS FIRE PROTECTION PROGRAM
	to unacceptable damage if wetted by sprinkler water discharge, should be protected by water shields or baffles.		room on water flow. There are no flow alarms on hose station standpipes but the control room operator would be aware of a flow by the main fire pumps operating annunciators. There is no safety-related equipment that is subject to unacceptable damage if wetted by sprinkler water discharge. Buildings in the plant industrial area with installed sprinkler systems are isolated from the yard main by post indicating valves. These systems are alarmed to the Protected Area Access Security Control Center (SCC).
E.3.b	All valves in the fire water systems should be electrically supervised. The electrical supervision signal should indicate in the control room and other appropriate command locations in the plant (see NFPA 26, "Supervision at Valves"). When electrical supervision of fire protection valves is not practicable, an adequate management supervision program should be provided. Such a program should include locking valves open with strict key control; tamper proof seals; and periodic visual check of all valves.	E.3.b	Water supply control valves in the fire water system are locked open. Outside valves are provided with post indicators. Valves that control water to the fire protection system are controlled as follows: a. Valves larger than 2-in. are locked in the wide open position with non-breakable shackle locks, b. Valves 2-in. and smaller controlling water supplies are sealed in the full open position, c. Valves to sprinkler or deluge alarm lines are sealed in the open position, and d. Valves that control water flow are checked periodically.
E.3.c	Automatic sprinkler systems should as a minimum conform to requirements of appropriate standards such as NFPA 13, "Standard for the Installation of Sprinkler Systems", and NFPA 15, "Standard for Water Spray Fixed Systems."	E.3.c	Installed sprinkler systems were designed using NFPA 13-1975 and NFPA 15-1973. Fire protection systems installed in safety-related areas have been specifically reviewed to identify deviations from the code requirements. See Section F.2.

Table F.3-1

Comparison with BTP 9.5-1 Appendix A (Continued)

	BTP 9.5-1 APPENDIX A	CGS FIRE PROTECTION PROGRAM
E.3.d	Interior manual hose installation should be able to reach any location with at least one effective hose stream. To accomplish this, standpipes with hose connections equipped with a maximum of 75 ft of 1.5 in. woven jacket lined fire hose and suitable nozzles should be provided in all buildings, including containment, on all floors and should be spaced at not more than 100-ft intervals. Individual standpipes should be of at least 4-in. diameter for multiple hose connections and 2.5-in. diameter for single hose connections. These systems should follow the requirements of NFPA No. 14 for sizing, spacing and pipe support requirements of NFPA No. 14 for sizing, spacing and pipe support requirements (NELPIA).	E.3.d	Standpipes and manual hose stations were designed using NFPA 14-1974. Hose stations are presently provided with 150 ft of 1.5-in. rubber lined fire hose with shutoff type fog nozzle and are capable of reaching any location with at least one effective hose stream in all building fire areas. The interior manual hose installations provide hose connections equipped with a maximum of 100 ft of 1.5-in. fire hose in most safety-related areas. The reactor building requires 150-ft hose lengths. The modified arrangement allows any location that contains, or could present a fire exposure hazard, to safety-related equipment to be reached with at least one effective hose stream as defined in NFPA 14.
	Hose stations should be located outside entrances to normally unoccupied areas and inside normally occupied areas. Standpipes serving hose stations in areas housing safety-related equipment should have shut off valves and pressure reducing devices (if applicable) outside the area.		Hose stations are presently located inside enclosed stairways to the various fire areas of all buildings. All hose stations and their shutoff valves serving areas housing safety-related equipment are located outside of the area.
E.3.e	The proper type of hose nozzles to be supplied to each area should be based on the fire hazard analysis. The usual combination spray/straight stream nozzle may cause unacceptable mechanical damage (for example, the delicate electronic equipment in the control room) and be unsuitable. Electrically safe nozzles should be provided at locations where electrical equipment or cabling is located.	E.3.e	Manual hose stations are equipped with all fog nozzles for use with Class A, B, and C fires. Hose station fog nozzles (1.5-in. diameter) do not have straight stream capability and are electrically safe. Hose monitors (2.5-in. diameter) are available for use on large oil fires and have the capability to go straight stream, but would not be used on energized electrical equipment or in control rooms.
E.3.f	Certain fires such as those involving flammable liquids respond well to foam suppression. Consideration should be given to use of any of the available foams for such specialized protection application. These include the more common chemical and mechanical low expansion foams, high expansion foam and the relatively new aqueous film forming foam (AFFF).	E.3.f	Portable AFFF foam units are staged in designated areas for fighting combustible liquid fires. There is no bulk storage of flammable liquids included in the plant design.

Table F.3-1

Comparison with BTP 9.5-1 Appendix A (Continued)

BTP 9.5-1 APPENDIX A	CGS FIRE PROTECTION PROGRAM
E.4 Halon Suppression Systems	E.4 Halon Suppression Systems
The use of Halon fire extinguishing agents should as a minimum comply with the requirements of NFPA 12A and 12B, "Halogenated Fire Extinguishing Agent Systems - Halon 1301 and Halon 1211." Only UL of FM approved agents should be used. In addition to the guidelines of NFPA 12A and 12B, preventative maintenance and testing of the systems, including check weighing of the Halon cylinders should be done at least quarterly. Particular consideration should also be given to: a. minimum required Halon concentration and soak time b. toxicity of Halon c. toxicity and corrosive characteristics of thermal decomposition products of Halon	Halon 1301 extinguishing systems are installed in the control room PGCC subfloor sections longitudinal cable ducts. The systems comply with the requirements of NFPA Standard 12A and GE Topical Report NEDO 10466-A. The Halon system for the control room PGCC subfloor sections longitudinal cable ducts in Area 1 consist of high pressure cylinders and necessary piping, nozzles, valves and detectors for suppressing fires in each of the sections. The Halon system will provide 20% concentration by volume for a 20-minute duration in the subfloor section ducts. The Halon 1301 agent is considered noninjurious to room occupants when the design concentration of the gas for total flooding does not exceed 7% of room volume. Halon discharges in the PGCC subfloor only, not in the occupied areas of the control room. A local alarm is installed to alert personnel prior to any discharge. It is considered that there will be no immediate adverse effects to sensitive electronic equipment due to thermal decomposition products of Halon 1301 under fire and nonfire conditions.
E.5 Carbon Dioxide Suppression Systems	E.5 Carbon Dioxide Suppression Systems
The use of carbon dioxide extinguishing systems should as a minimum comply with the requirements of NFPA 12, "Carbon Dioxide Extinguishing Systems." Particular consideration should be given to a. Minimum required CO_2 concentration and soak time: b. Toxicity of CO_2; c. Possibility of secondary thermal shock (cooling damage);	A low-pressure carbon dioxide extinguishing system is installed in the exciter housing of the turbine generator. During outages when the exciter housing is accessible, the CO_2 system is disarmed. The system was designed using NFPA 12-1973 where applicable.

Table F.3-1

Comparison with BTP 9.5-1 Appendix A (Continued)

BTP 9.5-1 APPENDIX A	CGS FIRE PROTECTION PROGRAM
d. Offsetting requirements for venting during CO_2 injection to prevent overpressurization versus sealing to prevent loss of agent;	
e. Design requirements from overpressurization; and	
f. Possibility and probability of CO_2 systems being out-of-service because of personnel safety consideration. CO_2 systems are disarmed whenever people are present in an area so protected. Areas entered frequently (even though duration time for any visit is short) have often been found with CO_2 systems shut off.	
E.6 Portable Extinguishers	E.6 Portable Extinguishers
Fire extinguishers should be provided in accordance with guidelines of NFPA 10 and 10A, "Portable Fire Extinguishers, Installation, Maintenance and Use." Dry chemical extinguishers should be installed with due consideration given to cleanup problems after use and possible adverse effects on equipment installed in the area.	Dry chemical portable fire extinguishers are located throughout CGS. Halon 1211 portable extinguishers are also present in electronic equipment areas. Portable extinguishers were selected using NFPA 10-1975.
F. GUIDELINES FOR SPECIFIC PLANT AREAS	F. GUIDELINES FOR SPECIFIC PLANT AREAS
F.1 Primary and Secondary Containment	F.1 Primary and Secondary Containment
F.1.a Normal Operation	F.1.a Normal Operation
Fire protection requirements for the primary and secondary containment areas should be provided on the basis of specific identified hazards. For example: a. Lubricating oil or hydraulic fluid system for the primary coolant pumps b. Cable tray arrangements and cable penetrations	The primary containment is inerted with nitrogen. In the secondary containment, manually actuated fire suppression systems have been provided for each charcoal filter bed and roughing filter in the standby gas treatment unit and each charcoal filter bed in the sump vent filter unit. Operation of these systems will not compromise the operation of safety-related systems. Automatic fire

Table F.3-1

Comparison with BTP 9.5-1 Appendix A (Continued)

	BTP 9.5-1 APPENDIX A	CGS FIRE PROTECTION PROGRAM
	c. Charcoal filters Fire suppression systems should be provided based on the fire hazards analysis. Fixed fire suppression capability should be provided for hazards that could jeopardize safe plant shutdown. Automatic sprinklers are preferred. An acceptable alternate is automatic gas (Halon or CO_2) for hazards identified as requiring fixed suppression protection. An enclosure may be required to confine the agent if a gas system is used. Such enclosures should not adversely affect safe shutdown, or other operating equipment in containment. Automatic fire suppression capability need not be provided in the primary containment atmospheres that are inerted during normal operation. However, special fire protection requirements during refueling and maintenance operations should be satisfied as provided below.	detection is provided throughout the secondary containment with annunciation in the control room. Detectors were selected and located after evaluating the hazards involved.
F.1.b	Refueling and Maintenance Refueling and maintenance operations in containment may introduce additional hazards such as contamination control materials, decontamination supplies, wood planking, temporary wiring, welding and flame cutting (with portable compressed fuel gas supply). Possible fires would not necessarily be in the vicinity of fixed detection and suppression systems. Management procedures and controls necessary to assure adequate fire protection are discussed in Section B.3.a of this table.	F.1.b Refueling and Maintenance Plant procedures establish fire protection controls during refueling and maintenance operations. Manual fire fighting capability is provided in secondary containment by standpipes with hose stations and portable fire extinguishers Adequate self-contained breathing apparatus is available for fire fighting. See Table F.3-2, paragraph III-H.

Table F.3-1

Comparison with BTP 9.5-1 Appendix A (Continued)

BTP 9.5-1 APPENDIX A	CGS FIRE PROTECTION PROGRAM
In addition, manual fire fighting capability should be permanently installed in containment. Standpipes with hose stations, and portable fire extinguishers, should be installed at strategic locations throughout containment for any required manual fire fighting operations. Equivalent protection from portable systems should be provided if it is impractical to install standpipes with hose stations. Adequate self-contained breathing apparatus should be provided near the containment entrances for fire fighting and damage control personnel. These units should he independent of any breathing apparatus or air supply systems provided for general plant activities.	
F.2 Control Room	F.2 Control Room
The control room is essential to safe reactor operation. It must be protected against disabling fire damage and should be separated from other areas of the plant by floors, walls and roofs having minimum fire resistance ratings of 3 hr. Control room cabinets and consoles are subject to damage from two distinct fire hazards: a. Fire originating within a cabinet or console, and b. Exposure fire involving combustibles in the general room area. Manual fire fighting capability should be provided for both hazards. Hose stations and portable water and Halon extinguishers should be located in the control room to eliminate the need for operators to leave the control room. An additional hose piping shut off valve and pressure reducing device should be installed outside the control room. Hose stations adjacent to the control room with portable extinguishers in the control room are acceptable.	The control room is separated from other areas of the plant by floor, walls, and ceiling having a minimum fire resistance rating of 3 hr. Access to the control room is gained by passing through low range blast doors with construction equivalent to that of a 3-hr fire-rated door. The exit from the control room consists of a door from the air lock to the stairwell which has a construction equivalent to that of a 1.5-hr fire-rated door, and a 1.5 hr rated doors from the stairwell to adjacent areas. The control room PGCC subfloor sections longitudinal cable ducts are protected from fire by a total flooding Halon 1301 system. Portable Halon and dry chemical extinguishers are located inside the control room and a standby hose station is provided adjacent to the control room for manual fighting of fires in cabinets, consoles, and involving combustibles in the general room area. Fire detection in the PGCC cabinets and consoles is provided by smoke detectors. Fire detection in the PGCC subfloor sections longitudinal cable ducts is provided by smoke and thermal detectors. Alarm and

Table F.3-1

Comparison with BTP 9.5-1 Appendix A (Continued)

BTP 9.5-1 APPENDIX A	CGS FIRE PROTECTION PROGRAM
Nozzles that are compatible with the hazards and equipment in the control room should be provided for the manual hose station. The nozzles chosen should satisfy actual fire fighting needs, satisfy electrical safety and minimize physical damage to electrical equipment from hose stream impingement.	annunciation are provided in the control room. Fire alarms in other parts of the plant are alarmed and annunciated in the control room.
Fire detection in the control room cabinets, and consoles should be provided by smoke and heat detectors in each fire area. Alarm and annunciation should be provided in the control room. Fire alarms in other parts of the plant should also be alarmed and annunciated in the control room.	Adequate numbers of SCBA are provided for fire fighting and damage control personnel. All penetration seals to the control room are pressure resistant. All ventilation penetrations into the control room are protected by 3-hr fire-rated dampers.
Breathing apparatus for control room operators should be readily available. Control room floors, ceiling, supporting structures, and walls, including penetrations and doors, should be designed to a minimum fire rating of three hr. All penetration seals should be air tight.	The control room ventilation intake is provided with smoke detection that alarms in the control room. The control room is also monitored by area smoke detectors. Smoke is prevented from entering the control room from other areas due to the pressurization of the room by the ventilation system. Makeup air for the control room ventilation system is drawn through the outside air intake which is located approximately 87 ft above the ground. If smoke is observed entering the intake, the control room operator has the option of drawing the makeup air through alternate intakes remote from the main plant buildings.
The control room ventilation intake should be provided with smoke detection capability to automatically alarm locally and isolate the control room ventilation system to protect operators by preventing smoke from entering the control room.	A fire in Fire Area RC-13 could close fire dampers which prevents control room pressurization and could allow some smoke infiltration into the control room. A nearby range fire could result in diluted smoke at each remote air intake. Significant smoke intake would actuate duct smoke detectors. If desired, operators can close control room air intake valves, which would also prevent control room pressurization. In either case, the control room operators can don staged SCBA or open control room doors and purge with smoke removal fan WEA-FN-7. See section F.2.5.5.
Manually operated venting of the control room should be available so that operators have the option of venting for visibility. Manually operated ventilation systems are acceptable.	
Cables should not be located in concealed floor and ceiling spaces. All cables that enter the control room should terminate in the control room. That is, no cabling should be simply routed through the control room from one area to another.	All cables in the suspended ceiling of the control room are in electric metallic tubing (EMT) type conduit. All cables in the raised floor extending beyond the PGCC cabinets are either enclosed in rigid steel conduit covered metal troughs, flexible metal conduit (with the outer jacket removed), Haveg Siltemp tape, or suitable fire resistive cable as identified in NFPA 70 for under raised floors. There are no automatic fixed Halon systems other than those protecting the PGCC subfloor sections longitudinal cable ducts.
If such concealed spaces are used, however, they should have fixed automatic total flooding Halon protection.	

Table F.3-1

Comparison with BTP 9.5-1 Appendix A (Continued)

BTP 9.5-1 APPENDIX A	CGS FIRE PROTECTION PROGRAM
F.3.a Cable Spreading Room The preferred acceptable methods (for fire suppression) are: a. Automatic water system such as closed head sprinklers, open head deluge, or open directional spray nozzles. Deluge and open spray systems should have provisions for manual operation at a remote station; however, there should also be provisions to preclude inadvertent operation. Location of sprinkler heads of spray nozzles should consider cable tray sizing and arrangements to assure adequate water coverage. Cables should be designed to allow wetting down with deluge water without electrical faulting. Open head deluge and open directional spray systems should be zoned so that a single failure will not deprive the entire area of automatic fire suppression capability. The use of foam is acceptable, provided it is of a type capable of being delivered by a sprinkler or deluge system, such as an aqueous film forming foam (AFFF). b. Manual hoses and portable extinguishers should be provided as backup. c. Each cable spreading room of each unit should have divisional cable separation, and be separated from the other and the rest of the plant by a minimum 3-hr rated fire wall (see NFPA 251 or ASTM E-119 for fire test resistance rating). d. At least two remote and separate entrances are provided to the room for access by fire brigade personnel; and e. Aisle separation provided between tray stacks should be at least 3 ft wide and 8 ft high.	F.3.a Cable Spreading Room The cable spreading room is protected by a closed head preaction sprinkler system designed to protect the overhead and to protect alternate open cable trays horizontally every 10 ft of the cable tray. A large number of smoke detectors are installed to reduce detection time. Cables have been designed to allow wetting without electrical fault. Inadvertent operation is prevented by the preaction system because either a manual trip from a local manual pull station or an automatic trip from the ceiling mounted smoke detectors is required to actuate the deluge valve and flood the system with water. In addition sprinkler heads must be heat actuated before water will flow from the system. The system has been designed taking into consideration cable tray sizing and arrangements such that there is adequate water coverage. Dry chemical portable extinguishers are available inside and outside the cable spreading room. A manual hose station is located immediately outside one of the entrances. An additional hose can be extended from the next lower floor at the other entrance. The cable spreading room is separated from other areas of the plant by walls having a minimum fire resistance of 3 hr. There are two remote and separate entrances to the room having doors with a 3-hr rating. Generally, tray stacks are separated by 3-ft aisles and aisle headroom is typically 8 ft; however, there are some tray crossover and support obstructions which hamper but do not preclude access. Cables have been arranged to provide divisional separation in accordance with CGS electrical separation guidelines as described in Section 8.3.1.4.

Table F.3-1

Comparison with BTP 9.5-1 Appendix A (Continued)

BTP 9.5-1 APPENDIX A	CGS FIRE PROTECTION PROGRAM
F.3.b Cable Spreading Room	F.3.b Cable Spreading Room
For cable spreading rooms that do not provide divisional cable separation of c, in addition to meeting a, b, d, and e (of paragraph F.3.a) above, the following should also be provided: a. Divisional cable separation should meet the guidelines of Regulatory Guide 1.75, "Physical Independence of Electric Systems." b. All cabling should be covered with a suitable fire retardant coating. c. As an alternate to a above, automatically initiated gas systems (Halon or CO_2) may be used for primary fire suppression, provided a fixed water system is used as a backup. d. Plants that cannot meet the guidelines of Regulatory Guide 1.75, in addition to meeting a, b, d and e above, an auxiliary shutdown system with all cabling independent of the cable spreading room should be provided.	The cable spreading room is designed to provide divisional separation as stated in paragraph F.3.a.
F.4 Plant Computer Room	F.4 Plant Computer Room
Safety-related computers should be separated from other areas of the plant by barriers having a minimum three-hour fire resistant rating. Automatic fire detection should be provided to alarm and annunciate in the control room and alarm locally. Manual hose stations and portable water and Halon fire extinguishers should be provided.	The plant computers are not safety related.
F.5 Switchgear Rooms	F.5 Switchgear Rooms
Switchgear rooms should be separated from the remainder of the plant by minimum three-hour rated fire barriers to the extent practicable. Automatic fire detection should alarm and annunciate in the control room and alarm locally. Fire hose stations and portable extinguishers should be readily available.	Safety-related switchgear rooms C206 and C208 have been separated from the remainder of the plant by 3 hr rated barriers. Duct penetrations serving the switchgear rooms are provided with 3 hr rated fire dampers. Cable penetrations are sealed. Automatic smoke detectors are provided to alarm in the control room. Manual hose stations and Halon 1211 portable extinguishers are available.

Table F.3-1

Comparison with BTP 9.5-1 Appendix A (Continued)

BTP 9.5-1 APPENDIX A	CGS FIRE PROTECTION PROGRAM
	Non-safety related switchgear in the SW portion of the turbine building 471' is not enclosed by rated fire barriers, but has automatic smoke detection, manual hose stations, and dry chemical portable extinguishers
Acceptable protection for cables that pass through the switchgear room is automatic water or gas agent suppression. Such automatic suppression must consider preventing unacceptable damage to electrical equipment and possible necessary containment of agent following discharge.	Cable routing has been designed such that cables either originate or terminate at the switchgear cabinets and do not just "pass through" the room.
F.6 Remote Safety-Related Panels	F.6 Remote Safety-Related Panels
The general area housing remote safety-related panels should be provided with automatic fire detectors that alarm locally and alarm and annunciate in the control room. Combustible materials should be controlled and limited to those required for operation. Portable extinguishers and manual hose stations should be provided.	All areas housing remote safety-related panels are provided with smoke detectors which alarm and annunciate in the control room. Local alarms can be initiated from the control room. Halon 1211 portable extinguishers and hose stations are available. Combustible materials are controlled and limited to those required for operation.
F.7 Station Battery Rooms	F.7 Station Battery Rooms
Battery rooms should be protected against fire explosions. Battery rooms should be separated from each other and other areas of the plant by barriers having a minimum fire rating of 3-hr inclusive of all penetrations and openings. See NFPA 69, "Standard on Explosion Prevention Systems." Ventilation systems in the battery rooms should be capable of maintaining the hydrogen concentration well below 2 vol. % hydrogen concentration. Standpipe and hose and portable extinguishers should be provided. Alternatives: a. Provide a total fire rated barrier enclosure of the battery room complex that exceeds the fire load contained in the room. b. Reduce the fire load to be within the fire barrier capability of 1.5 hr. or c. Provide a remote manual actuated sprinkler system in each room and provide the 1.5-hr fire	Battery rooms are separated from each other and other areas of the plant by walls with a minimum fire rating of 3 hr. Door assemblies are also 3-hr rated. Ventilation penetrations serving the battery rooms are protected by 1.5-hr fire rated dampers. This is in excess of that required by the fire loading. Other penetrations serving the battery rooms are sealed. The ventilation systems serving the battery room will maintain the hydrogen concentration below 2%. Halon 1211 portable extinguishers and hose stations are available to the battery rooms.

Table F.3-1

Comparison with BTP 9.5-1 Appendix A (Continued)

BTP 9.5-1 APPENDIX A	CGS FIRE PROTECTION PROGRAM
barrier separation.	
F.8 Turbine Lubrication and Control Oil Storage and Use Areas	F.8 Turbine Lubrication and Control Oil Storage and Use Areas
A blank fire wall having a minimum resistance rating of 3 hr should separate all areas containing safety-related systems and equipment from the turbine oil system. When a blank wall is not present, open head deluge protection should be provided for the turbine oil hazards and automatic open head water curtain protection should be provided for wall openings.	The turbine oil system is located in the turbine generator building, separate from all safety-related equipment by a minimum 3-hr fire-rated barrier and/or by spatial separation of at least 50 ft. Components of the turbine oil system are protected by deluge spray or wet sprinkler systems. The ceiling opening in the turbine oil reservoir room is protected by a deluge system.
F.9 Diesel Generator Areas	F.9 Diesel Generator Areas
Diesel generators should be separated from each other and other areas of the plant by fire barriers having a minimum fire resistance rating of three hr. Automatic fire suppression such as AFFF foam, or sprinklers should be installed to combat any diesel generator or lubricating oil fires. Automatic fire detection should be provided to alarm and annunciate in the control room and alarm locally. Drainage for fire fighting water and means for local manual venting of smoke should be provided. Day tanks with total capacity up to 1100 gal are permitted in the diesel generator area under the following conditions: a. The day tank is located in a separate enclosure, with a minimum fire resistance rating of three hr, including doors or penetrations. These enclosures should be capable of containing the entire contents of the day tanks. The enclosure should be ventilated to avoid accumulation of oil fumes. b. The enclosure should be protected by automatic fire suppression systems such as AFFF or sprinklers.	The diesel generators are separated from each other and other areas of the plant by walls and doors having a minimum fire resistance rating of 3 hr, except at 472 ft 9 in. (see FHA for Fire Areas DG-2 or DG-3). Each diesel generator and day tank is protected by a preaction sprinkler system. Fire detectors are provided for the diesel generator and day tanks which alarm and annunciate in the control room. Rooms with major radio equipment have smoke detection. Means for automatic smoke venting in the diesel generator rooms is accomplished through actuation of the mechanical exhaust air system. Water which would be emitted from the preaction or manual hose systems would be carried away by the floor drain system and through the exterior hinged door flap to the yard. Day tanks, each having a 3000-gal capacity, are provided in separate enclosed areas. One tank is provided for each diesel generator. The day tank enclosures have a minimum fire resistance, including doors, of 3 hr. Enclosure penetrations are sealed. The day tank areas are vented to avoid the accumulation of oil fumes. The enclosures are capable of containing the entire contents of the day tanks. No floor drains are provided in the day tank rooms.

Table F.3-1

Comparison with BTP 9.5-1 Appendix A (Continued)

BTP 9.5-1 APPENDIX A	CGS FIRE PROTECTION PROGRAM
When day tanks cannot be separated from the diesel generator one of the following should be provided for the diesel generator area: a. Automatic open head deluge or open head spray nozzle system(s), b. Automatic closed head sprinklers, c. Automatic AFFF that is delivered by a sprinkler deluge or spray system, d. Automatic gas system (Halon or CO_2) may be used in lieu of foam or sprinklers to combat diesel generator and/or lubricating oil fires.	Although the total gallon capacity of the day tank exceeds 1100 gal (based on the hourly consumption of the tandem diesels), adequate structural, ventilation, and fire extinguishment features are provided.
F.10 Diesel Fuel Oil Storage Areas Diesel fuel oil tanks with a capacity greater than 1100 gal should not be located inside the buildings containing safety-related equipment. They should be located at least 50 ft from any building containing safety-related equipment, or if located within 50 ft, they should be housed in a separate building with construction having a minimum fire resistance rating of 3 hr. Buried tanks are considered as meeting the 3-hr fire resistance requirements. See NFPA 30, "Flammable and Combustible Liquids Code," for additional guidance. When located in a separate building, the tank should be protected by an automatic fire suppression system such as AFFF or sprinklers. Tanks, unless buried, should not be located directly above or below safety-related systems or equipment regardless of the fire rating of separating floors or ceilings.	F.10 Diesel Fuel Oil Storage Areas The diesel oil storage tanks are buried in the yard except for the end portion of each tank containing the transfer pump which extends under the diesel generator building. Each transfer pump is housed in its own room and is separated from other parts of the plant by a fire barrier with a minimum rating of 3 hr. Each pump room is vented mechanically to avoid accumulation of oil fumes. Automatic fire detection is provided in each room to alarm and annunciate in the control room. Each room is protected by a preaction sprinkler system.

Table F.3-1

Comparison with BTP 9.5-1 Appendix A (Continued)

BTP 9.5-1 APPENDIX A	CGS FIRE PROTECTION PROGRAM
In operating plants where tanks are located directly above or below the diesel generators and cannot reasonably be moved, separating floor, and main structural members should, as a minimum, have fire resistance rating of three hr. Floors should be liquid tight to prevent leaking of possible oil spills from one level to another. Drains should be provided to remove possible oil spills and fire fighting water to a safe location. One of the following acceptable methods of fire protection should also be provided: a. Automatic open head deluge or open head spray nozzle system(s); b. Automatic closed head sprinklers; or c. Automatic AFFF that is delivered by a sprinkler system or spray system.	
F.11 Safety-Related Pumps Pump houses and rooms housing safety-related pumps should be protected by automatic sprinkler protection unless a fire hazards analysis can demonstrate that a fire will not endanger other safety-related equipment required for safe plant shutdown. Early warning fire detection should be installed with alarm and annunciation locally and in the Control Room. Local hose stations and portable extinguishers should also be provided.	F.11 Safety-Related Pumps Safety-related pumps in the reactor building and in the standby service water pump houses are not protected by sprinklers. Early warning fire detection which alarms and annunciates in the main control room is installed in these areas. Portable fire extinguishers and local hose stations are available. The fire hazards analysis for these areas indicates that a fire will not endanger post-fire safe shutdown capability. The non-safety-related circulating water pumps and fire pumps in the circulating water pump house and the secondary diesel fire pump in the water filtration building are protected by automatic sprinkler systems.
F.12 New Fuel Area Hand portable extinguishers should be located within this area. Also, local hose stations should be located outside but within hose reach of this area. Automatic fire detection should alarm and annunciate in the control room and alarm locally. Combustibles should be limited to a minimum in the new fuel area. The storage area should be provided with a drainage system to preclude accumulation of water.	F.12 New Fuel Area New fuel is temporarily stored in a storage rack on the 606-ft elevation of the reactor building. Manual hose stations and dry chemical fire extinguishers are provided in the vicinity. Control room alarms are initiated by the automatic fire detection system. Local audible alarms can be manually sounded from the control room.

Table F.3-1

Comparison with BTP 9.5-1 Appendix A (Continued)

BTP 9.5-1 APPENDIX A	CGS FIRE PROTECTION PROGRAM
The storage configuration of new fuel should always be so maintained as to preclude criticality for any water density that might occur during fire water application.	
F.13 Spent Fuel Pool Area	F.13 Spent Fuel Pool Area
Protection for the spent fuel pool area should be provided by local hose stations and portable extinguishers. Automatic fire detection should be provided to alarm and annunciate in the Control Room and to alarm locally.	Manual hose stations and dry chemical fire extinguishers are provided in the vicinity of the spent fuel pool. Automatic fire detectors are provided which alarm and annunciate in the control room. Local audible alarms can be manually sounded from the control room.
F.14 Radwaste Building	F.14 Radwaste Building
The radwaste building should be separated from other areas of the plant by fire barriers having at least three-hour ratings. Automatic sprinklers should be used in all areas where combustible materials are located. Automatic fire detection should be provided to annunciate the alarm in the control room and alarm locally. During a fire, the ventilation systems in these areas should be capable of being isolated. Water should drain to liquid radwaste building sumps. Acceptable alternative fire protection is automatic fire detection to alarm and annunciate in the control room, in addition to manual hose stations and portable extinguishers consisting of hand held and large wheeled units.	The radwaste building is separated from other areas of the plant by fire barrier walls and door assemblies which have fire ratings adequate for the fire loadings. All penetrations in the fire barrier walls are sealed. Automatic sprinkler systems have been provided to protect the prefiltration in the radwaste building exhaust filter systems. In addition, automatic sprinkler protection has been provided over the combustible storage on the 467-ft and 487-ft elevations of the building, and in the solid waste processing area on the 437-ft elevation. Fire detectors are installed in hazard areas to alarm and annunciate in the main control room. Manual hose stations and portable extinguishers are also provided. Water from the fire suppression systems would be drained into the floor drain system which is then pumped into the floor drain collection tank.
F.15 Decontamination Areas	F.15 Decontamination Areas
The decontamination areas should be protected by automatic sprinklers if flammable liquids are stored. Automatic fire detection should be provided to annunciate and alarm in the control room and alarm locally. The ventilation system should be capable of being isolated. Local hose stations and hand portable extinguishers should be provided as backup to the sprinkler system.	The principal decontamination area is located on the 467-ft level of the radwaste building. A personnel decontamination area is located on the 487-ft level of the radwaste building. The decontamination areas are monitored by automatic fire detectors. The decontamination area on the 467-ft elevation is protected by an automatic sprinkler system. Each area has dry chemical portable extinguishers and manual hose stations

Table F.3-1

Comparison with BTP 9.5-1 Appendix A (Continued)

BTP 9.5-1 APPENDIX A	CGS FIRE PROTECTION PROGRAM
	provided. Flammable liquids are not stored in decontamination areas. Capability for isolation of the ventilation system is not considered necessary for fire control due to the nature of the combustible loading in the area.
F.16 Safety-Related Water Tanks	F.16 Safety-Related Water Tanks
Storage tanks that supply water for safe shutdown should be protected from the effects of fire. Local hose stations and portable extinguishers should be provided. Portable extinguishers should be located in nearby hose houses. Combustible materials should not be stored next to outdoor tanks. A minimum of 50 ft of separation should be provided between outdoor tanks and combustible materials where feasible.	Water for shutdown is supplied from the condensate storage tanks which are located in the transformer yard on the north side of the turbine generator building. The tanks are separated from the yard area by a wall approximately 18 ft high. Portable extinguishers are provided in the turbine generator building. Manual hose stations are available from the yard hydrants or the turbine generator building. The suppression pool in the reactor building supplies water for post-fire safe shutdown. Manual hose stations and portable extinguishers are provided in the building.
F.17 Cooling Towers	F.17 Cooling Towers
Cooling towers should be of non-combustible construction or so located that a fire will not adversely affect any safety-related systems or equipment. Cooling towers should be of non-combustible construction when the basins are used for the ultimate heat sink or for the fire. Cooling towers of combustible construction, so located that a fire in them could adversely affect safety-related systems or equipment should be protected with an open head deluge system installation with hydrants and hose houses strategically located.	The cooling towers are constructed of non-combustible materials (except for fan shrouds, fan blades, fill material, and drift eliminators). The cooling towers are located remote from any safety-related buildings or equipment. The cooling tower basins are not used for the ultimate heat sink. There is a separate reliable fire protection water supply provided by a bladder tank remotely located away from the cooling towers.
F.18 Miscellaneous Areas	F.18 Miscellaneous Areas
Miscellaneous areas such as records storage areas, shops, warehouses, and auxiliary boiler rooms should be so located that a fire or effects of a fire, including smoke, will not adversely affect any safety-related systems or equipment. Fuel oil tanks for auxiliary boilers should be buried or provided with dikes to contain the entire tank contents.	Miscellaneous areas such as records storage areas, shops, warehouses, and auxiliary boiler rooms are located such that a fire or the effects of a fire, including smoke, will not adversely affect any safety-related systems or equipment. The auxiliary boiler fuel oil tank is buried in the yard.

Table F.3-1

Comparison with BTP 9.5-1 Appendix A (Continued)

BTP 9.5-1 APPENDIX A	CGS FIRE PROTECTION PROGRAM
G. SPECIAL PROTECTION GUIDELINES	G. SPECIAL PROTECTION GUIDELINES
G.1 Welding and Cutting, Acetylene - Oxygen Fuel Gas Systems	G.1 Welding and Cutting, Acetylene - Oxygen Fuel Gas Systems
This equipment is used in various areas throughout the plant. Storage locations should be chosen to permit fire protection by automatic sprinkler systems. Local hose stations and portable equipment should be provided as backup. The requirements of NFPA 51 and 51B are applicable to these hazards. A permit system should be required to utilize this equipment. Also refer to 2f herein.	Bulk storage of flammable gases is in a special structure well separated from plant structures. When not in use (to support of ongoing maintenance activities), flammable gas welding equipment is stored in designated areas which do not contain safe post-fire shutdown systems. A permit system is used for welding control and/or temporary storage of welding gases in all areas except for those specifically designated. Plant procedures call for protection or removal of combustibles, protection of equipment/cabling, and fire watch during and after the welding operation. During normal plant operation, ordinary welding and cutting is done in designated welding areas, which may not have automatic suppression. However, manual suppression equipment is available.
G.2 Storage Areas for Dry Ion Exchange Resins	G.2 Storage Areas for Dry Ion Exchange Resins
Dry ion exchange resins should not be stored near essential safety-related systems. Dry unused resins should be protected by automatic wet pipe sprinkler installations. Detection by smoke and heat detectors should alarm and annunciate in the control room and alarm locally. Local hose stations and portable extinguishers should provide backup for these areas. Storage areas of dry resin should have curbs and drains. Refer to NFPA 92M, "Waterproofing and Draining of Floors."	Bulk storage of dry ion exchange resins is located on 467 ft elevation of the radwaste building. There are no safety-related systems or equipment located in this area. Automatic sprinkler protection is provided. Portable extinguishers and hose stations are available. Floor drains are provided for removal of fire fighting water.
G.3 Hazardous Chemicals	G.3 Hazardous Chemicals
Hazardous chemicals should be stored and protected in accordance with the recommendations of NFPA 49, "Hazardous Chemicals Data." Chemicals storage areas should be well ventilated and protected against flooding conditions since some chemicals may react with water to produce ignition.	Hazardous chemicals are controlled in accordance with plant procedures.

Table F.3-1

Comparison with BTP 9.5-1 Appendix A (Continued)

BTP 9.5-1 APPENDIX A	CGS FIRE PROTECTION PROGRAM
G.4 Materials Containing Radioactivity	G.4 Materials Containing Radioactivity
Materials that collect and contain radioactivity such as spent ion exchange resins, charcoal filters, and HEPA filters should be stored in closed metal tanks or containers that are located in areas free from ignition sources of combustibles. These materials should be protected from exposure to fires in adjacent areas as well. Consideration should be given to requirements for removal of isotopic decay heat from entrained radioactive materials.	Spent resins are contained in metal vessels or containers. HEPA and charcoal filters are disposed of on a routine basis such that no large accumulation exists. After removal, the interior storage is in a controlled area where hose stations and fire extinguishers are readily available.

Table F.3-2

Comparison with the Specific Commitments
to 10 CFR 50 Appendix R

10 CFR 50 APPENDIX R SECTION	CGS FIRE PROTECTION PROGRAM
I. INTRODUCTION AND SCOPE	I. INTRODUCTION AND SCOPE
This appendix applies to licensed nuclear power electric generating stations that were operating prior to January 1, 1979, except to the extent set forth in § 50.48(b) of this part. With respect to certain generic issues for such facilities it sets forth fire protection features required to satisfy Criterion 3 of Appendix A to this part.[1]	Appendix R, Section I, is provided here for information only.
A Fire Protection Safety Evaluation Report that has been issued for each operating plant states how these guidelines were applied to each facility and identifies open fire protection issues that will be resolved when the facility satisfies the appropriate requirements of Appendix R to Part 50.	
Criterion 3 of Appendix A to this part specifies that "Structures, systems, and components important to safety shall be designed and located to minimize, consistent with other safety requirements, the probability and effect of fires and explosions."	
When considering the effects of fire, those systems associated with achieving and maintaining safe shutdown conditions assume major importance to safety because damage to them can lead to core damage resulting from loss of coolant through boiloff.	
The phrases "important to safety" or "safety-related" will be used throughout this Appendix R as applying to all safety functions. The phrase "safe shutdown" will be used throughout this appendix as applying to both hot and cold shutdown functions.	

[1] Clarification and guidance with respect to permissible alternatives to satisfy Appendix A to BTP 9.5-1 has been provided in four other NRC documents:

"Supplementary Guidance on Information Needed for Fire Protection Evaluation," dated October 21, 1976;
"Sample Technical Specifications," dated May 12, 1977;
"Nuclear Plant Fire Protection Functional Responsibilities, Administrative Control and Quality Assurance," dated June 14, 1977;
"Manpower Requirements for Operating Reactors," dated May 11, 1978.

Table F.3-2

Comparison with the Specific Commitments
to 10 CFR 50 Appendix R (Continued)

10 CFR 50 APPENDIX R SECTION	CGS FIRE PROTECTION PROGRAM
Because fire may affect safe shutdown systems and because the loss of function of systems used to mitigate the consequences of design basis accidents under post-fire conditions dose not per se impact public safety, the need to limit fire damage to systems desired to achieve and maintain safe shutdown conditions is greater than the need to limit fire damage to those systems required to mitigate the consequences of design basis accidents. Three levels of fire damage limits are established according to the safety functions of the structure, system, or component.	

Safety Function	Fire damage limits
Hot shutdown	One train of equipment necessary to achieve hot shutdown from either the control room or emergency control station(s) must be maintained free of fire damage by a single fire, including an exposure fire.[2]
Cold shutdown	Both trains of equipment necessary to achieve cold shutdown may be damaged by a single fire, but damage must be limited so that at least one train can be repaired or made operable within 72 hr using onsite capability.
Design basis accidents	Both trains of equipment necessary for mitigation of consequences following design basis accidents may be damaged by a single exposure fire.

[2]Exposure fire - An exposure fire is a fire in a given area that involves either in situ or transient combustibles and is external to any structures, systems, or components located in or adjacent to that same area. The effects of such fire (e.g. smoke, heat, or ignition) can adversely affect those structures, systems, or components important to safety. Thus, a fire involving one train of safe shutdown equipment may constitute an exposure fire for the redundant train located in the same area and a fire involving combustibles other than either redundant train may constitute an exposure fire to both redundant trains located in the same area.

Table F.3-2

Comparison with the Specific Commitments
to 10 CFR 50 Appendix R (Continued)

10 CFR 50 APPENDIX R SECTION	CGS FIRE PROTECTION PROGRAM
The most stringent fire damage limit shall apply for those systems that fall into more than one category. Redundant systems used to mitigate the consequences of other design basis accidents but not necessary for safe shutdown may be lost to a single exposure fire. However, protection shall be provided so that a fire within only one such system will not damage the redundant system.	
II. GENERAL REQUIREMENTS	II. GENERAL REQUIREMENTS
A. Fire Protection Program	A. Fire Protection Program
A fire protection program shall be established at each nuclear power plant. The program shall establish the fire protection of structures, systems, and components important to safety at each plant and the procedures, equipment, and personnel required to implement the program at the plant site.	The Columbia Generating Station (CGS) fire protection program establishes the fire protection policy for the protection of structures, systems, and components important to safety and describes the plant procedures, equipment, and personnel required to implement the program at the plant site.
The fire protection program shall be under the direction of an individual who has been delegated authority commensurate with the responsibilities of the position and who has available staff personnel knowledgeable in both fire protection and nuclear safety.	The personnel assigned responsibilities for the fire protection program are described in Table F.3-1, Section A.1.
The fire protection program shall extend the concept of defense-in-depth to fire protection in fire areas important to safety, with the following objectives:	The fire protection program shall extend the concept of defense-in-depth to fire protection in fire areas important to safety, with the following objectives:
- to prevent fires from starting;	- to prevent fires from starting;
- to detect rapidly, control, and extinguish promptly those fires that do occur; and	- to detect rapidly, control, and extinguish promptly those fires that do occur; and
- to provide protection for structures, systems, and components important to safety so that a fire that is not promptly extinguished by the fire suppression activities will not prevent the safe shutdown of the plant.	- to provide protection for structures, systems, and components important to safety so that a fire that is not promptly extinguished by the fire suppression activities will not prevent the safe shutdown of the plant in the event of fire.

Table F.3-2

Comparison with the Specific Commitments
to 10 CFR 50 Appendix R (Continued)

10 CFR 50 APPENDIX R SECTION	CGS FIRE PROTECTION PROGRAM
B. Fire Hazards Analysis	B. Fire Hazards Analysis
A fire hazards analysis shall be performed by qualified fire protection and reactor systems engineers to (1) consider potential in situ and transient fire hazards; (2) determine the consequences of fire in any location in the plant on the ability to safely shutdown the reactor or on the ability to minimize and control the release of radioactivity to the environment; and (3) specify measures for fire prevention, fire detection, fire suppression, and fire containment and alternative shutdown capability as required for each fire area containing structures, systems, and components important to safety in accordance with NRC guidelines and regulations.	The CGS fire hazards analysis is provided in Section F.4.
C. Fire Prevention Features	C. Fire Prevention Features
Fire protection features shall meet the following general requirements for all areas that contain or present a fire hazard to structures, systems, or components important to safety.	Fire prevention features have been established at CGS as listed below:
1. In situ fire hazards shall be identified and suitable protection provided.	1. The combustible loading calculation (Reference F.7.3.b) identifies the in-situ and the maximum expected transient fire loading in each plant fire area. The combustible loading calculation results are an input to the fire hazards analysis.
2. Transient fire hazards associated with normal operation, maintenance, repair, or modification activities shall be identified and eliminated where possible. Those transient fire hazards that can not be eliminated shall be controlled and suitable protection provided.	2. Plant procedures control the introduction of combustible materials into the safety-related areas of the plant.
3. Fire detection systems, portable extinguishers, and standpipe and hose stations shall be installed.	3. Fire detection systems, portable fire extinguishers, and standpipe and hose connections are installed.
4. Fire barriers or automatic suppression systems or both shall be installed as necessary to protect redundant systems or components necessary for safe shutdown.	4. Fire barriers or automatic suppression systems or both are installed for the protection of redundant post-fire safe shutdown equipment as detailed in the fire hazards analysis.
5. A site fire brigade shall be established, trained, and equipped and shall be on site at all times.	5. The plant fire brigade has been established, trained, and equipped. The fire brigade is maintained onsite at all times. The fire brigade composition may be less than the minimum requirements for a period of time
6. Fire detection and suppression systems shall be designed, installed, maintained, and tested by	

Table F.3-2

Comparison with the Specific Commitments
to 10 CFR 50 Appendix R (Continued)

10 CFR 50 APPENDIX R SECTION	CGS FIRE PROTECTION PROGRAM
personnel properly qualified by experience and training in fire protection systems.	not to exceed 2 hr in order to accommodate unexpected absence provided immediate action is taken to fill the required position.
7. Surveillance procedures shall be established to ensure that fire barriers are in place and that fire suppression systems and components are operable.	6. Fire detection and suppression systems are designed by qualified engineering personnel. Maintenance and testing is performed by qualified plant maintenance and operations personnel in accordance with plant procedures. 7. Periodic testing procedures have been established to ensure that essential fire barriers are in place and that fire detection and suppression systems are operable.
D. Alternative or Dedicated Shutdown Capability	D. Alternative or Dedicated Shutdown Capability
In areas where the fire protection features cannot ensure safe shutdown capability in the event of a fire in that area, alternative or dedicated shutdown capability shall be provided.	Alternative shutdown capability is provided for use in the event of a fire in the main control room.
III. SPECIFIC REQUIREMENTS	III. SPECIFIC REQUIREMENTS
A. Water Supplies for Fire Suppression Systems	A. Water Supplies for Fire Suppression Systems
Two separate water supplies shall be provided to furnish necessary water volume and pressure to the fire main loop. Each supply shall consist of a storage tank, pump, piping, and appropriate isolation and control valves. Two separate redundant suctions in one or more intake structures from a large body or water (river, lake, etc.) will satisfy the requirement for two separated water storage tanks. These supplies shall be separated so that a failure of one supply will not result in a failure of the other supply. Each supply of the fire water distribution system shall be capable of providing for a period of 2 hr the maximum expected water demands as determined by the fire hazards analysis for safety-related fire areas or other areas that present a fire exposure hazard to safety-related areas.	See Section F.2.4.1 and Table F.3-1 (paragraphs E.2.a through E.2.g) for a description of the fire protection system water supplies.

Table F.3-2

Comparison with the Specific Commitments
to 10 CFR 50 Appendix R (Continued)

10 CFR 50 APPENDIX R SECTION	CGS FIRE PROTECTION PROGRAM
When storage tanks are used for combined service water/fire water use the minimum volume for fire uses shall be ensured by means of dedicated tanks or by some physical means such as a vertical standpipe for other water service. Administrative controls including locks for tank outlet valves, are unacceptable as the only means to ensure minimum water volume. Other water systems used as one of the two fire water supplies shall be permanently connected to the fire main system and shall be capable of automatic alignment to the fire main system. Pumps, controls, and power supplies in these systems shall satisfy the requirements for the main fire pumps. The use of other water systems for fire protection shall not be incompatible with their functions required for safe plant shutdown. Failure of the other system shall not degrade the fire main system.	
B. Sectional Isolation Valves Sectional valves or key operated valves shall be installed in the fire main loop to permit isolation of portions of the fire main loop for maintenance or repair without interrupting the entire water supply.	B. Sectional Isolation Valves See Section F.2.4.1 and Table F.3-1, paragraph E.2.a. for a description of the fire protection system sectional isolation valves.
C. Hydrant Isolation Valves Valves shall be installed to permit isolation of outside hydrants from the fire main for maintenance or repair without interrupting the water supply to automatic or manual fire suppression systems in any area containing or presenting a fire hazard to safety-related or safe shutdown equipment.	C. Hydrant Isolation Valves See Section F.2.4.1 and Table F.3-1, paragraph E.2.a. for a description of the fire protection system hydrant isolation valves.
D. Manual Fire Suppression Standpipe and hose systems shall be installed so that at least one effective hose stream will be able to reach any location that contains or presents an exposure fire hazard to structures, systems, or components important to safety.	D. Manual Fire Suppression See Section F.2.5.3 and Table F.3-1, paragraph E.2.g and E.3.d for a description of the hose standpipe system. Fire hose stations in the reactor building are adequate to reach drywell fire hazards.

Table F.3-2

Comparison with the Specific Commitments
to 10 CFR 50 Appendix R (Continued)

10 CFR 50 APPENDIX R SECTION	CGS FIRE PROTECTION PROGRAM
Access to permit effective functioning of the fire brigade shall be provided to all areas that contain or present an exposure fire hazard to structures, systems, or components important to safety.	
Standpipe and hose stations shall be inside PWR containments and BWR containments that are not inerted. Standpipe and hose stations inside containment may be connected to a high quality water supply of sufficient quantity and pressure other than the fire main loop if plant specific features prevent extending the fire main supply inside containment. For BWR drywells, standpipe and hose stations shall be placed outside the dry well with adequate lengths of hose to reach any location inside the dry well with an effective hose stream.	
E. Hydrostatic Hose Tests	E. Hydrostatic Hose Tests
Fire hose shall be hydrostatically tested at a pressure of 150 psi or 50 psi above maximum fire main pressure, whichever is greater. Hose stored in outside hose houses shall be tested annually. Interior standpipe hose shall be tested every 3 years.	See LCS 1.10.3 for a description of fire system hose hydrostatic testing.
F. Automatic Fire Detection	F. Automatic Fire Detection
Automatic fire detection systems shall be installed in all areas of the plant that contain or present a hazard to safe shutdown or safety-related systems or components. These fire detection systems shall be capable of operating with or without offsite power.	See Section F.2.3 and Table F.3-1, paragraphs E.1.a through E.1.d for a description of the fire detection system.
G. Fire Protection of Safe Shutdown Capability	G. Fire Protection of Safe Shutdown Capability
1. Fire protection features shall be provided for structures, systems, and components important to safe shutdown. These features shall be capable of limiting fire damage so that: a. One train of systems necessary to achieve and maintain hot shutdown conditions from either the control room or emergency control station(s) is free of fire damage; and	Fire protection of post-fire safe shutdown capability is provided as detailed in the fire hazards analysis, Section F.4.

Table F.3-2

Comparison with the Specific Commitments
to 10 CFR 50 Appendix R (Continued)

10 CFR 50 APPENDIX R SECTION	CGS FIRE PROTECTION PROGRAM
b. Systems necessary to achieve and maintain cold shutdown from either the control room or emergency control station(s) can be repaired within 72 hr.	
2. Except as provided for in paragraph G.3 of this section, where cables or equipment, including associated non-safety circuits that could prevent operation or cause maloperation due to hot shorts, open circuits, or shorts to ground of redundant trains of systems necessary to achieve and maintain hot shutdown conditions are located within the same fire area outside of primary containment, one of the following means of ensuring that one of the redundant trains is free of fire damage shall be provided.	Deviations to section III.G.2 include the use of MI fire-related cable (see Section F.2.2.2 and Reference F.7.6.j), use of operator manual actions (see Section F.4.3.1 and Reference F.7.6.u) , and unprotected Division 2 instrument sensing lines associated with MS-LT-26D (see Reference F.7.6.x).
a. Separation of cables and equipment and associated non-safety circuits of redundant trains by a fire barrier having a 3-hr rating. Structural steel forming a part of or supporting such fire barriers shall be protected to provide fire resistance equivalent to that required of the barrier.	
b. Separation of cables and equipment and associated non-safety circuits of redundant trains by a horizontal distance of more than 20 ft with no intervening fire hazards. In addition, fire detectors and an automatic fire suppression system shall be installed in the fire area.	
c. Enclosure of cable and equipment and associated non-safety circuits of one redundant train in a fire barrier having a 1-hr fire rating. In addition, fire detectors and an automatic fire suppression system shall be installed in the fire area.	
Inside noninerted containments one of the following fire protection means shall be provided:	

Table F.3-2

Comparison with the Specific Commitments
to 10 CFR 50 Appendix R

10 CFR 50 APPENDIX R SECTION	CGS FIRE PROTECTION PROGRAM
d. Separation of cables and equipment and associated non-safety circuits of redundant trains by a horizontal distance of more than 20 ft with no intervening combustibles or fire hazards;	
e. Installation of fire detectors and an automatic fire suppression system in the fire area; or	
f. Separation of cables and equipment and associated non-safety circuits of redundant trains by a noncombustible radiant energy shield.	
3. Alternative or dedicated shutdown capability and its associated circuits[3] independent of cables, systems, or components in the area, room, or zone under consideration shall be provided:	
a. Where the protection of system whose function is required for hot shutdown does not satisfy the requirement of paragraph G.2 of this section; or	
b. Where redundant trains of system required for hot shutdown located in the same fire area may be subject to damage from fire suppression activities or from the rupture or inadvertent operation of the fire suppression systems.	
In addition, fire detection and a fixed fire suppression system shall be installed in the area, room, or zone under consideration.	

[3] Alternative shutdown capability is provided by rerouting, relocating, or modification of existing systems; dedicated shutdown capability is provided by installed new structures and systems for the function of post-fire shutdown.

Table F.3-2

Comparison with the Specific Commitments
to 10 CFR 50 Appendix R (Continued)

10 CFR 50 APPENDIX R SECTION	CGS FIRE PROTECTION PROGRAM
H. Fire Brigade	H. Fire Brigade
A site fire brigade trained and equipped for fire fighting shall be established to ensure adequate manual fire fighting capability for all areas of the plant containing structures, systems, or components important to safety. The fire brigade shall be at least five members on each shift. The brigade leader and at least two brigade members shall have sufficient training in or knowledge of plant safety-related systems to understand the effects of fire and fire suppressants on safe shutdown capability. The qualification of fire brigade members shall determine their ability to perform strenuous fire fighting activities. The shift supervisor shall not be a member of the fire brigade. The brigade leader shall be competent to assess the potential safety consequences of a fire and advise control room personnel. Such competence by the brigade leader may be evidenced by possession of an operator's license or equivalent knowledge of plant safety-related systems.	The CGS plant complies with commitments related to post-fire safe shutdown plant equipment. The fire brigade composition is specified in Section 13.1.2.3.4. See paragraph II.C.5 above and Table F.3-1, paragraphs B.2 through B.5.
The minimum equipment provided for the brigade shall consist of personal protective equipment such as turnout coats, boots, gloves, hard hats, emergency communication equipment, portable lights, portable ventilation equipment, and portable extinguishers. Self-contained breathing apparatus using full-face positive pressure masks approved by National Institute for Occupational Safety and Health (NIOSH) - approval formerly given by the U.S. Bureau of Mines) shall be provided for fire brigade damage control and control room personnel. At least 10 masks shall be available for fire brigade personnel. Control room personnel may be furnished breathing air by a manifold system piped from a storage reservoir if practical. Service or rated operating life shall be a minimum of 0.5 hr for the self-contained units.	
At least a 1-hr supply of breathing air in extra bottles shall be located on the plant site for each unit of self-contained breathing apparatus. In addition, an onsite 6-hr supply of reserve air shall be provided and arranged to permit quick and complete replenishment	CGS has a minimum of 10 SCBA units available for fire brigade use. The 1-hr plus 6-hr reserve air supply is provided by charged SCBA bottles staged onsite (see Reference F.7.6.r). The control room SCBA air supply (for non-Appendix R fires) is

Table F.3-2

Comparison with the Specific Commitments
to 10 CFR 50 Appendix R (Continued)

10 CFR 50 APPENDIX R SECTION	CGS FIRE PROTECTION PROGRAM
of exhausted air supply bottles as they are returned. If compressors are used as a source of breathing air, only units approved for breathing air shall be used and the compressors shall be operable assuming a loss of offsite power. Special care must be taken to locate the compressor in areas free of dust and contaminants.	provided by bottles charged from the onsite SCBA compressor (see Reference F.7.6.s) that is not provided with offsite power.
I. Fire Brigade Training	I. Fire Brigade Training
The fire brigade training program shall ensure that the capability to fight potential fires is established and maintained. The program shall consist of an initial classroom instruction program followed by periodic classroom instruction, fire fighting practice, and fire drills.	The CGS plant fire brigade training program is described in Section 13.2.2.5. The requirements of this section were used as guidance in the development of this program. See Table F.3-1, paragraph B.5.
1. Instruction	
a. The initial classroom instruction shall include:	
(1) Indoctrination of the plant fire fighting plan with specific identification of each individual's responsibilities.	
(2) Identification of the type and location of fire hazards and associated types of fires that could occur in the plant.	
(3) The toxic and corrosive characteristics of expected products of combustion.	
(4) Identification of the location of fire fighting equipment for each fire area and familiarization with the layout of the plant including access and egress routes to each area.	
(5) The proper use of available fire fighting equipment and the correct method of fighting each type of fire. The types of fires covered should include fires in energized electrical equipment, fires in cables and cable trays, hydrogen fires, fires involving flammable and	

Table F.3-2

Comparison with the Specific Commitments
to 10 CFR 50 Appendix R (Continued)

10 CFR 50 APPENDIX R SECTION	CGS FIRE PROTECTION PROGRAM
combustible liquids or hazardous process chemicals, fires resulting from construction or modifications (welding), and record file fires.	
(6) The proper use of communication, lighting, ventilation, and emergency breathing equipment.	
(7) The proper method for fighting fires inside buildings and confined spaces.	
(8) The direction and coordination of the fire fighting activities (fire brigade leaders only).	
(9) Detailed review of fire fighting strategies and procedures.	
(10) Review of latest plant modifications and corresponding changes in fire fighting plans.	
NOTE: Items (9) and (10) may be deleted from the training of no more than two of the non-operations personnel who may be assigned to the fire brigade.	
b. The instruction shall be provided by qualified individuals who are knowledgeable, experienced, and suitably trained in fighting the types of fires that could occur in the plant and in using the types of equipment available in the nuclear power plant.	See F.7.6.z for required instructor qualifications.
c. Instruction shall be provided to all fire brigade members and fire brigade leaders.	
d. Regular planned meetings shall be held at least every 3 months for all brigade members to review changes in the fire protection program and other subjects as necessary.	
e. Periodic refresher training sessions shall be held to repeat the classroom instruction program for all brigade members over a	

Table F.3-2

Comparison with the Specific Commitments
to 10 CFR 50 Appendix R (Continued)

10 CFR 50 APPENDIX R SECTION	CGS FIRE PROTECTION PROGRAM
2-year period. These sessions may be concurrent with the regular planned meetings.	
2. Practice Practice sessions shall be held for each shift fire brigade on the proper method of fighting the various types of fires that could occur in a nuclear power plant. These sessions shall provide brigade members with experience in actual fire extinguishment and the use of emergency breathing apparatus under strenuous conditions encountered in fire fighting. These practice sessions shall be provided at least once per year for each fire brigade member.	
3. Drills a. Fire brigade drills shall be performed in the plant so that the fire brigade can practice as a team.	
b. Drills shall be performed at regular intervals not to exceed 3 months for each shift fire brigade. Each fire brigade member should participate in each drill, but must participate in at least two drills per year. A sufficient number of these drills, but not less that one for each shift fire brigade per year, shall be unannounced to determine the fire fighting readiness of the plant fire brigade, brigade leader, and fire protection systems and equipment. Persons planning and authorizing an unannounced drill shall ensure that the responding shift fire brigade members are not aware that a drill is being planned until it is begun. Unannounced drills shall not be scheduled closer than 4 weeks. At least one drill per year shall be performed on a “back shift” for each shift fire brigade.	

Table F.3-2

Comparison with the Specific Commitments
to 10 CFR 50 Appendix R (Continued)

10 CFR 50 APPENDIX R SECTION	CGS FIRE PROTECTION PROGRAM
c. The drills shall be preplanned to establish the training objectives of the drill and shall be critiqued to determine how well the training objectives have been met. Unannounced drills shall be planned and critiqued by members of the management staff responsible for plant safety and fire protection. Performance deficiencies of a fire brigade or of individual fire brigade members shall be remedied by scheduling additional training for the brigade members. Unsatisfactory drill performance shall be followed by a repeat drill within 30 days.	
d. At 3-year intervals, a randomly selected unannounced drill shall be critiqued by qualified individuals independent of the licensee's staff. A copy of the written report from such individuals shall be available for NRC review.	
e. Drills shall as a minimum include the following:	
(1) Assessment of fire alarm effectiveness.	
(2) Assessment of each brigade member's knowledge of his or her role in the fire fighting strategy for the area assumed to contain the fire. Assessment of the brigade member's conformance with established plant fire fighting procedures and use of fire fighting equipment, including self-contained breathing apparatus, communication equipment, and ventilation equipment to the extent practicable.	
(3) The simulated use of fire fighting equipment required to cope with the situation and type of fire selected for	

Table F.3-2

Comparison with the Specific Commitments
to 10 CFR 50 Appendix R (Continued)

10 CFR 50 APPENDIX R SECTION	CGS FIRE PROTECTION PROGRAM
the drill. The area and type of fire chosen for the drill should differ from those used in the previous drill so that brigade members are trained in fighting fires in various plant areas. The situation selected should simulate the size and arrangement of a fire that could reasonably occur in the area selected, allowing for fire development due to the time required to respond, to obtain equipment, and organize for the fire, assuming loss of automatic suppression capability.	
(4) Assessment of brigade leader's direction of the fire fighting effort as to thoroughness, accuracy, and effectiveness.	
4. Records Individual records of training provided to each fire brigade member, including drill critiques, shall be maintained for at least 3 years to ensure that each member receives training in all parts of the training program. These records of training shall be available for NRC review. Retraining or broadened training for fire fighting within buildings shall be scheduled for all those brigade members whose performance records show deficiencies.	
J. Emergency Lighting Emergency lighting units with at least an 8-hr battery power supply shall be provided in all areas needed for operation of safe shutdown equipment and in access and egress routes thereto.	J. Emergency Lighting Emergency lighting is provided as detailed in Section 9.5.3.
K. Administrative Controls Administrative controls shall be established to minimize fire hazards in areas containing structures, systems, and components important to safety. These controls shall establish procedures to:	K. Administrative Controls The CGS plant complies with these commitments through implementation of the procedures of Reference F.7.8 which contain the program administrative controls. See Table F.3-1, paragraphs B.1 through B.5.

Table F.3-2

Comparison with the Specific Commitments
to 10 CFR 50 Appendix R (Continued)

10 CFR 50 APPENDIX R SECTION	CGS FIRE PROTECTION PROGRAM
1. Govern the handling and limitation of the use of ordinary combustible materials, combustible and flammable gases and liquids, high efficiency particulate air and charcoal filters, dry ion exchange resins, or other combustible supplies in safety-related areas.	
2. Prohibit the storage of combustibles in safety-related areas or establish designated storage areas with appropriate fire protection.	
3. Govern the handling of and limit transient fire loads such as combustible and flammable liquids, wood and plastic products, or other combustible materials in buildings containing safety-related systems or equipment during all phases of operating, and especially during maintenance, modification, or refueling operations.	
4. Designate the onsite staff member responsible for the in plant fire protection review of proposed work activities to identify potential transient fire hazards and specify required additional fire protection in the work activity procedure.	
5. Govern the use of ignition sources by use of a flame permit system to control operations. A separate permit shall be issued for each area where work is to be done. If work continues over more than one shift, the permit shall be valid for not more than 24 hr when the plant is operating or for the duration of a particular job when the plant is shutdown.	Ignition source permit extensions are strictly controlled during plant operating conditions.
6. Control the removal from the area of all waste, debris, scrap, oil spills, or other combustibles resulting from the work activity immediately following completion of the activity, or at the end of each work shift, whichever comes first. Maintain the periodic housekeeping inspections to ensure continued compliance with these administrative controls.	

Table F.3-2

Comparison with the Specific Commitments
to 10 CFR 50 Appendix R (Continued)

10 CFR 50 APPENDIX R SECTION	CGS FIRE PROTECTION PROGRAM
8. Control the use of specific combustibles in safety-related areas. All wood used in safety-related areas during maintenance, modification, or refueling operations (such as laydown blocks or scaffolding) shall be treated with a flame retardant. Equipment or supplies (such as new fuel) shipped in untreated combustible packing containers may be unpacked in safety-related areas if required for valid operating reasons. However, all combustible materials shall be removed from the area immediately following the unpacking. Such transient combustible material, unless stored in approved containers, shall not be left unattended during lunch breaks, shift changes, or other similar periods. Loose combustible packing material such as wood or paper excelsior, or polyethylene sheeting shall be placed in metal containers with tight-fitting self-closing metal covers.	Minor amounts of untreated wood are allowed to account for necessary tools and equipment used within plant areas.
9. Control actions to be taken by an individual discovering a fire, for example, notification of control room, attempt to extinguish fire, and actuation of local fire suppression systems.	
10. Control actions to be taken by the control room operator to determine the need for brigade assistance on report of a fire or receipt of alarm on control room annunciator panel, for example, announcing location of fire over PA system, sounding fire alarms, and notifying the shift supervisor and the fire brigade leader of the type, size, and location of the fire.	
11. Control the actions to be taken by the fire brigade after notification by the control room operator of a fire, for example, assembling in a determined location, receiving directions from the fire brigade leader, and discharging specific fire fighting responsibilities including selection and transportation of fire fighting equipment to fire location, selection of protective equipment, operating instructions for use of fire suppression systems, and use of preplanned strategies for fighting fires in specific areas.	

Table F.3-2

Comparison with the Specific Commitments
to 10 CFR 50 Appendix R (Continued)

10 CFR 50 APPENDIX R SECTION	CGS FIRE PROTECTION PROGRAM
12. Define the strategies for fighting fires in all safety-related areas presenting a hazard to safety-related equipment. These strategies shall designate:	
a. Fire hazards in each area covered by the specific prefire plans.	
b. Fire extinguishants best suited for controlling the fires associated with the fire hazards in that area and the nearest location of these extinguishants.	
c. Most favorable direction from which to attack a fire in each area in view of the ventilation direction, access hallways, stairs, and doors that are most likely to be free of fire, and the best station or elevation for fighting the fire. All access and egress routes that involve locked doors should be specifically identified in the procedure with the appropriate precautions and methods for access specified.	
d. Plant systems that should be managed to reduce the damage potential during a local fire and the location of local and remote controls for such management (e.g. any hydraulic or electrical systems in the zone covered by the specific fire fighting procedure that could increase the hazards in the area because of overpressurization or electrical hazards).	
e. Vital heat-sensitive system components that need to be kept cool while fighting a local fire. Particularly hazardous combustibles that need cooling should be designated.	
f. Organization of fire fighting brigades and the assignment of special duties according to job title so that all fire fighting functions are covered by any complete shift personnel complement. These duties include command control of the brigade,	

Table F.3-2

Comparison with the Specific Commitments
to 10 CFR 50 Appendix R (Continued)

10 CFR 50 APPENDIX R SECTION	CGS FIRE PROTECTION PROGRAM
transporting fire suppression and support equipment to the fire scenes, applying the extinguishant to the fire, communication with the control room, and coordination with outside fire departments.	
g. Potential radiological and toxic hazards in fire zones.	
h. Ventilation system operation that ensures desired plant air distribution when ventilation flow is modified for fire containment or smoke clearing operations.	
i. Operations requiring control room and shift engineer coordination or authorization.	
j. Instructions for plant operators and general plant personnel during fire.	
L. Alternative and Dedicated Shutdown Capability	L. Alternative and Dedicated Shutdown Capability
1. Alternative or dedicated shutdown capability provided for a specific fire area shall be able to (a) achieve and maintain subcritical reactivity conditions in the reactor, (b) maintain reactor coolant inventory, (c) achieve and maintain hot standby[4] conditions for a PWR (hot shutdown for a BWR); (d) achieve cold shutdown conditions thereafter. During the post-fire shutdown, the reactor coolant system process variables shall be maintained within those predicted for a loss of normal ac power, and the fission product boundary integrity shall not be affected; i.e. there shall be no fuel clad damage, rupture of any primary coolant boundary, or rupture of the containment boundary.	Alternative shutdown capability is provided for use in the event of a main control room fire. CGS does not utilize dedicated shutdown capability. Sections F.4.3 and F.4.4 address post-fire safe shutdown assumptions and methodology. See Section F.4.3.2 for the remote post-fire safe shutdown system and Table F.4-1 for equipment credited for remote post-fire safe shutdown.
2. The performance goals for the shutdown functions shall be:	

[4] As defined in the Standard Technical Specifications.

Table F.3-2

Comparison with the Specific Commitments
to 10 CFR 50 Appendix R (Continued)

10 CFR 50 APPENDIX R SECTION	CGS FIRE PROTECTION PROGRAM
a. The reactivity control function shall be capable of achieving and maintaining cold shutdown reactivity conditions.	
b. The reactor coolant makeup function shall be capable of maintaining the reactor coolant level above the top of the core for BWRs and within the level indication in the pressurizer for PWRs.	
c. The reactor heat removal function shall be capable or achieving and maintaining decay heat removal.	
d. The process monitoring function shall be capable of providing direct readings of the process variables necessary to perform and control the above functions.	
e. The supporting functions shall be capable of providing the process cooling, lubrication, etc., necessary to permit the operation of the equipment used for safe shutdown functions.	
3. The shutdown capability for specific fire areas may be unique for each such area, or it may be one unique combination of systems for all such areas. In either case, the alternative shutdown capability shall be independent of the specific fire area(s) and shall accommodated post-fire conditions where offsite power is available and where offsite power is not available for 72 hr. Procedures shall be in effect to implement this capability.	
4. If the capability to achieve and maintain cold shutdown will not be available because of fire damage, the equipment and systems comprising the means to achieve and maintain the hot standby or hot shutdown condition shall be capable of maintaining such conditions until cold shutdown can be achieved. If such equipment and systems will not be capable of being powered by both onsite and offsite electric	

Table F.3-2

Comparison with the Specific Commitments
to 10 CFR 50 Appendix R (Continued)

10 CFR 50 APPENDIX R SECTION	CGS FIRE PROTECTION PROGRAM
power systems because of fire damage, an independent onsite power system shall be provided. The number of operating shift personnel, exclusive of fire brigade members, required to operate such equipment and systems shall be onsite at all times.	
5. Equipment and systems comprising the means to achieve and maintain cold shutdown shall not be damaged by fire, or the fire damage to such equipment and systems shall be limited so that the systems can be made operable and cold shutdown can be achieved within 72 hr. Materials for such repairs shall be readily available onsite and procedures shall be in effect to implement such repairs. If such equipment and systems used prior to 72 hr after the fire will not be capable of being powered by both onsite and offsite electric power systems because of fire damage, an independent onsite power system shall be provided. Equipment and systems used after 72 hr may be powered by offsite power only.	
6. Shutdown system installed to ensure post-fire shutdown capability need not be designed to meet Seismic Category I criteria, single failure criteria, or other design basis accident criteria, except where required for other reasons, e.g. because of interface with or impact on existing safety system, or because of adverse valve actions due to fire damage.	
7. The safe shutdown equipment and systems for each fire area shall be known to be isolated from associated non-safety circuits in the fire area so that hot shorts, open circuits or shorts to ground in the associated circuits will not prevent operation of the safe shutdown equipment. The separation and barriers between trays and conduits containing associated circuits of one safe shutdown division and trays and conduits containing associated circuits or safe shutdown	

Table F.3-2

Comparison with the Specific Commitments
to 10 CFR 50 Appendix R (Continued)

10 CFR 50 APPENDIX R SECTION	CGS FIRE PROTECTION PROGRAM
cables from the redundant division, or the isolation of the associated circuits such that a postulated fire involving associated circuits will not prevent safe shutdown.[5]	
M. Fire Barrier Cable Penetration Seal Qualification	M. Fire Barrier Cable Penetration Seal Qualification
Penetration seal designs shall use only noncombustible materials and shall be qualified by tests that are comparable to tests used to rate fire barriers. The acceptance criteria for the test shall include:	CGS complies with this commitment except that silicone foam is combustible. See Section F.2.2 for a discussion of penetration seal qualification.
N. Fire Doors	N. Fire Doors
Fire doors shall be self-closing or provided with closing mechanisms and shall be inspected semiannually to verify that automatic hold-open, release, and closing mechanisms and latches are operable.	See Section F.2.2.1 and LCS 1.10.5 for a discussion of fire doors.
One of the following measures shall be provided to ensure they will protect the opening as required in case of fire:	
1. Fire doors shall be kept closed and electrically supervised at a continuously manned location;	
2. Fire doors shall be locked closed and inspected weekly to verify that the doors are in the closed position;	
3. Fire doors shall be provided with automatic hold-open and release mechanisms and inspected daily to verify that doorways are free of obstructions; or	
4. Fire doors shall be kept closed and inspected daily to verify that they are in the closed position.	

[5] An acceptable method of complying with this alternative would be to meet Regulatory Guide 1.75 position 4 related to associated circuits and IEEE Standard 384-1974 (Section 4.5) where trays from redundant safety divisions are so protected that postulated fires affect trays from only one safety division.

Table F.3-2

Comparison with the Specific Commitments
to 10 CFR 50 Appendix R (Continued)

10 CFR 50 APPENDIX R SECTION	CGS FIRE PROTECTION PROGRAM
The fire brigade leader shall have ready access to keys for any locked fire doors. Areas protected by automatic total flooding has suppression systems shall have electrically supervised self-closing fire doors or shall satisfy option 1 above.	
O. Oil Collection System for Reactor Coolant Pump	O. Oil Collection System for Reactor Coolant Pump
The reactor coolant pump shall be equipped with an oil collection system if the containment is not inerted during normal operation. The oil collection system shall be so designed, engineered, and installed that failure will not lead to fire during normal or design basis accident conditions and that there is reasonable assurance that the system will withstand the safe shutdown earthquake.[6]	The CGS plant has a nitrogen inerted containment and therefore this does not apply to CGS.

[6] See Regulatory Guide 1.29 - "Seismic Design Classification," Paragraph C.2.

F.4 FIRE HAZARDS ANALYSIS

The fire hazards analysis determines the adequacy of the fire protection features to prevent and mitigate the consequences of a postulated fire. A fire hazards analysis is performed for each fire area within the reactor building, the radwaste control building, the diesel generator building, the standby service water pump houses, reactor recirculation system (RRC) pump adjustable speed drive (ASD) building, and the turbine generator building.

The fire hazards analysis identifies the potential fire consequences based on consideration of the design basis fire, the location of post-fire safe shutdown equipment and cabling located within the area, the construction of the fire area, and the available fire protection systems. Potential fire consequences are evaluated to:

- Ensure the capability to achieve and maintain safe shutdown,
- Prevent radioactive release to ensure the health and safety of the public,
- Ensure safe egress for employees, and
- Provide for plant property protection.

The ability of the plant to attain and maintain post-fire safe shutdown is evaluated against the following:

- 10 CFR 50 Appendix A, General Design Criterion 3, Fire Protection,
- 10 CFR 50 Appendix R, Section III.G, Fire Protection of Safe Shutdown Capability,
- 10 CFR 50 Appendix R, Section III.J, Emergency Lighting, and
- 10 CFR 50 Appendix R, Section III.L, Alternative and Dedicated Shutdown Capability.

Clarification on the above was obtained from various generic letters (Reference F.7.2.f).

The methodology used to perform the fire hazards analyses is detailed below.

F.4.1 PLANT FIRE AREA ARRANGEMENT

The plant buildings are divided into fire areas generally based on the location of equipment needed for safe post-fire shutdown and on the construction of the building walls, floor, and ceiling assemblies. A fire area is that portion of a building or plant site which is separated from other areas by barriers which are sufficient to withstand the fire hazards associated with the area and which will protect important equipment outside the area from a fire within the

area. Section F.4.4.3 provides a listing and description of the plant fire areas. Drawings which show the arrangement of the plant fire areas are contained in Section F.6.

F.4.2 DESIGN BASIS FIRE

The fire hazards analysis uses the concept of a "design basis fire" to estimate the magnitude and severity of a potential fire. Design basis fires are those postulated to result from the combustion of the exposed combustibles within the fire area, assuming that no manual or automatic fire fighting has been initiated. The effects of the design basis fire are evaluated to ensure the adequacy of the fire area boundaries and to evaluate the potential effects of the fire on plant equipment located within the area. The combustible loading for each fire area is contained in calculation FP-02-85-03.

The combustible loading value is intended to provide an approximate estimate of the probable maximum fire severity. The combustible load concept does not account for factors such as ceiling height, ventilation, combustible concentrations, or storage methods which may significantly affect actual fire growth. The combustible load is usually conservative as it assumes total combustion whereas more accurate methods account for residue and incomplete combustion. The combustible load provides a conservative, relative measure of expected fire severity in each plant fire area. This conservatism in the combustible loading calculation generally accounts for combustibles which are not specifically included in the area fire loading.

F.4.2.1 Combustible Loading Assumptions

To calculate the area combustible loading, the major sources of combustibles within each plant fire area are identified. The entire weight of cable insulation in cable trays (covered or open) is included in the combustible loading. Cables inside conduits and within fire rated raceway barriers are not considered in the overall area combustible loading calculation. Enclosures or electrical panels are expected to prevent the electrical cabling from significantly contributing to the general area fire hazard. The only exception is cabling inside main control room electrical panels which is included in the combustible loading calculation. Cabling within the main control room power generation control complex (PGCC) underfloor raceways is excluded due to the protective steel enclosures and Halon protection.

Similarly, oil or grease in totally enclosed bearing housings in which the oil or grease is not pressurized or recirculated (such as the grease inside a motor operator) is not included in the combustible load calculations. Flammable/combustible liquids stored inside listed storage cabinets are also not considered to contribute to the general area fire hazard.

The transient combustible loading is generally included in the area combustible loading calculation by adding a value of 7,496,500 Btu (corresponding to a 55-gal drum of oil) to the heat release for the fire area. Certain fire areas may have larger or smaller transient fire

loadings due to fire area location and use. The transient combustible value for the fire area is assumed to represent a bounding value of the potential transient fire loading and is not expected to exactly correlate with plant walkdown data.

Floor covering materials are considered combustible if they represent an unusual hazard (wood, plastic or rubberized floor coverings and carpeting).

F.4.2.2 Combustible Loading Calculations Methodology

The combustible loading values were developed as follows:

a. First, the major sources of combustibles (oil, electrical cable, charcoal, and storage) are identified. Data from plant equipment manuals is used when available to verify the oil and charcoal quantities. The amount of electrical cable within each area is obtained from electrical raceway information. Quantities of other materials were estimated during plant walkdowns.

b. Second, the heat release from each combustible is multiplied by its heat of combustion yielding the heat released. The lower heat of combustion value is used as the combustion products remain gaseous under fire conditions. This value represents a 'maximum' heat release as incomplete oxidation or partial burning in an actual fire would reduce the heat release. See Reference F.7.3.b for a list of material heat of combustion values (Btu/lb).

c. Next, the gross floor area (the floor area within the inside perimeter of the outside walls of the building with no deduction for interior walls, columns, or other features) of the fire area is calculated using dimensions taken from (or scaled from) plant drawings.

d. The total heat released (Btu) from the in-situ combustible materials in the fire area is totaled with the assumed heat release due to transient fire loading. This value is divided by the gross floor area (ft^2) yielding the fire loading for the fire area in Btu/ft^2.

e. The expected duration of the fire may be estimated from the combustible loading calculation by dividing the fire loading in the fire area by 80,000 Btu/ft^2. This value corresponds to a 1-hr fire loading (Reference F.7.2.j).

f. The Section F.4.4.4 detailed Fire Hazards Analysis (FHA) does not list the specific combustible loading in Btu/ft^2 or expected fire duration. The detailed combustible loading analysis is in calculation FP-02-85-03 (Reference F.7.3.b). The detailed FHA, Section F.4.4.4, lists the relative fire area hazard severity as follows:

Low = 0 to 80,000 Btu/ft^2
Medium = between 80,000 and 160,000 Btu/ft^2
High = above 160,000 Btu/ft^2

The above is based on NFPA (Reference F.7.2.j) with additional conservative margin.

F.4.2.3 Fire Protection Engineering Evaluations

In accordance with the guidance of Generic Letter 86-10, fire protection engineering evaluations may be performed to assess the adequacy of alternatives to prescriptive fire protection guidance documents. Examples include deviations to NFPA codes, partial area suppression or detection, less than 3-hr barriers, etc., and typically involve a comparison of the hazards to the fire protection features. Fire protection engineering evaluations deviating from NRC committed guidance documents should be prepared/approved by a qualified fire protection engineer, meet Standard License Condition 2.c(14) and be maintained on file for NRC review.

F.4.3 POST-FIRE SAFE SHUTDOWN

The systems and equipment which are designated as post-fire safe shutdown equipment represent the minimum equipment which is necessary to bring the plant to a safe cold shutdown condition in the event of a fire in any area of the plant. Only that portion of post-fire safe shutdown equipment which is expected to be free of fire damage is credited for post-fire safe shutdown, although other plant systems and equipment could also be available for use after a fire.

The development of the post-fire safe shutdown equipment list is based on the following:

- The post-fire safe shutdown systems must be capable of accommodating conditions where offsite power is available or where offsite power is not available for 72 hr.

- Fires are not postulated to occur simultaneously with other plant accidents or design basis events such as a loss-of-coolant accident (LOCA), an operating basis earthquake, or a safe shutdown earthquake.

- Single failure (including operator error) is not considered (i.e., only a single shutdown train is required to mitigate a design basis fire). For example, a single failure of a remote shutdown transfer switch is not considered in the analysis of the remote shutdown system.

- All plant equipment is functional (not in test, maintenance, or out of service) at the time of fire.

- The post-fire safe shutdown systems need not be designed to cope with other plant accidents such as pipe breaks or stuck valves, except those portions of the systems which interface with or impact existing safety systems.

- The safe shutdown capability should not be adversely affected by a fire which results in the loss of all automatic function from unprotected circuits located in the area in conjunction with worst case spurious actuations or signals resulting from a fire.

- Fail safe circuits (electrical divisions 4, 5, 6, and 7) are designed to fail in a safe manner if subjected to fire damage. For example, reactor scram, once initiated, cannot be overridden as a consequence of fire.

- Alternative shutdown systems used in the event of a main control room fire must meet the commitments to 10 CFR 50, Appendix R Section III.L, with the exception of the following:

  Section III.L.1 requires that "during post-fire shutdown, the reactor coolant system process variables be maintained within those predicted for a loss of normal ac power." The Columbia Generating Station (CGS) analysis is based on maintaining reactor parameters within those values predicted for the existing Chapter 15 transient analyses. Spurious signals are considered one at a time, and are evaluated to determine whether the signal could indirectly or directly affect safe shutdown capability (Reference F.7.5.c).

- Three phase power feeders are assumed not to fail in such a manner as to reconnect to an adjacent three phase power feeder and cause an electrically isolated motor to operate except for those supplying power to high-to-low pressure interface valves.

- Due to low fire loading and the large size of Fire Area R-1 or available fire suppression and detection systems in Fire Areas TG-1, Zone TG-12, and RC-3, the failure of Seismic Category I supports and steel raceways in such a manner that cross circuiting of cables between raceways or loss of safe shutdown equipment from falling debris is not considered to be credible.

- Failure of nonseismically supported electrical components of lighting, communication, fire protection, and security systems have been evaluated to ensure post-fire safe shutdown components in Seismic Category I areas are not affected.

- Stainless steel instrument sensing lines and their supports have been analyzed to ensure that the lines will not fail as a result of the temperature increases resulting from potential fire conditions in the vicinity of the lines. See section F.4.4.4 Fire area R-1 section 8.a. for more details.

- A properly coordinated circuit protective device (fuse, breaker, etc.) will isolate any downstream fault that results from a design basis fire even if the protective device is in the fire area.

- The emergency or abnormal response procedures allow the operator sufficient information to determine which equipment is available for post-fire shutdown in the event of a fire outside the main control room.

- There are no actions (repairs) taken by plant staff to bring back into service a piece of equipment which has failed due to fire conditions and is necessary for safe post-fire shutdown.

To provide the capability to safely shut down with or without offsite power available, post-fire shutdown is accomplished using the suppression pool for reactor inventory and depressurization (Reference F.7.3.c).

Post-fire safe shutdown may be initiated by a manual reactor scram or by an automatic scram resulting from a loss of offsite power with the accompanying loss of normal feedwater. The negative reactivity available due to control rod insertion upon scram will maintain subcriticality from event initiation to cold shutdown. The high pressure systems (e.g., HPCS or RCIC) are assumed to be unavailable for post-fire shutdown.

The main steam isolation valves (MSIVs) are closed manually or automatically by a loss of the grid. Vessel isolation occurs as the water level decreases and no high pressure makeup systems are available. Upon isolation, the vessel pressure increases resulting in the safety/relief valve (SRV) opening and discharging steam to the suppression pool. Manual operation of the automatic depressurization system (ADS) SRVs is initiated to rapidly depressurize the vessel and allow initiation of residual heat removal system in its alternative cooling mode. The automatic features of the systems such as the RHR logic circuitry or auto synchronizing of the diesel generator are not credited for post-fire safe shutdown.

At least five SRVs and one residual heat removal loop are available for post-fire shutdown for a fire in any area. In the event of a main control room fire, at least five SRVs are available (three SRV controls are provided on each remote shutdown panel). Depressurization is accomplished using five SRVs as a minimum, as prescribed in the Emergency Operating Procedures (EOPs). GE analysis shows that peak clad temperature and reactor pressure vessel (RPV) water level remain acceptable for a blowdown initiated when wide range water level instrument indicates TAF (-150 in. including loop inaccuracies) (Reference F.7.3.c). TAF is shown to be reached at approximately 22 minutes after main steam line isolation, if no low pressure system injection occurs. (Reference F.7.3.gg).

The RHR system is used in its alternate shutdown cooling mode to remove decay heat and maintain the suppression pool temperature below limits. Cooling water to the RHR system is supplied by the service water system.

Instrumentation for reactor vessel water level, reactor vessel pressure, suppression pool temperature, and suppression pool water level are used for process monitoring during post-fire shutdown.

Ventilation systems for the main control room, remote shutdown room, vital switchgear rooms, cable spreading room/cable chase, safe shutdown pump rooms, and MCC rooms in the reactor building are evaluated to ensure they remain available to support post-fire shutdown where required.

See Figures F.6-12 through F.6-17 and Reference F.7.7.q for post-fire safe shutdown one-line and P&ID drawings. See Figures F.6-18 through F.6-20 for post-fire safe shutdown credited lighting and communication components.

High to low pressure interfaces are valves whose spurious opening could result in a loss of RPV/reactor coolant system inventory and, due to the lower pressure rating on the downstream piping, an interfacing LOCA outside of Primary Containment (Reference F.7.3.k).

This page is left intentionally blank.

F.4.3.1 Normal Post-Fire Safe Shutdown Equipment

One train of the normal post-fire safe shutdown equipment is used to bring the plant to a safe cold shutdown condition from the main control room. The normal post-fire safe shutdown systems consist of two redundant trains (Division 1 and Division 2) as follows:

The Division 2 post-fire safe shutdown system consists of equipment and cabling of the following systems:

RHR B (alternate shutdown cooling mode Division 2),
SW B (Division 2),
ADS/MSRV (Division 2),
Supporting heating, ventilating, and air-conditioning (HVAC) systems (Division 2),
System status monitoring instrumentation (Division 2),
MSIVs (Division 2), and
Supporting electrical power, DG and battery (Division 2).

The Division 1 post-fire safe shutdown system consists of equipment and cabling of the following systems:

RHR A (alternate shutdown cooling mode, Division 1),
SW A (Division 1),
ADS/MSRV (Division 1),
Supporting HVAC systems (Division 1),
System status monitoring instrumentation (Division 1),
MSIVs (Division 1), and
Supporting electrical power including DG and battery (Division 1).

The automatic features of these systems, such as the RHR logic circuitry or auto-synchronizing of the diesel generator are not credited. Only those instruments which are designated as post-fire safe shutdown equipment have been evaluated to ensure their availability in the event of fire.

Normal shutdown operator manual actions are identified and evaluated in the Reference F.7.3.d. Reference F.7.6.u identifies which normal shutdown manual operator actions are a 10 CFR 50 Appendix R III.G.2 deviation and documents their feasibility and reliability.

The normal post-fire safe shutdown equipment is listed in Table F.4-1.

F.4.3.2 Remote Post-Fire Safe Shutdown Equipment

In the event of a main control room fire, selected portions of the Division 1 and Division 2 post-fire safe shutdown systems are used to shut down the reactor from outside the control room. Necessary instrumentation and controls for three Division 1 and three Division 2 SRVs, Division 2 RHR, Division 2 service water, and supporting power and ventilation systems are located on the remote shutdown and other local panels. Manual transfer switches isolate the controls for certain components from the main control room.

The only operator actions which are credited prior to evacuation are manual reactor scram and MSIV closure. Prior to control room evacuation, the operators will request Security to unlock security doors required for remote shutdown and announce the reactor scram and control room evacuation. If time is available, prior to control room evacuation, the operators will also perform the following actions:

- Manually initiate reactor core isolation cooling (RCIC),
- Start SW loop A and B,
- Trip the main generator, and
- Transfer SM-7 and SM-8 to the backup transformer.

The MSIVs and the reactor protection system (RPS) are fail safe systems which are routed in grounded raceways to ensure that loss of power resulting from a fire will fail these circuits to a safe condition.

Following evacuation of the control room, the operators

- Transfer control away from the control room to the remote shutdown and other local panels,
- Start standby service water pump to provide cooling water to the diesel generator,
- Start diesel generator 2,
- Initiate RHR in the alternate shutdown cooling mode (injection of suppression pool water directly into the reactor) when the reactor pressure is reduced below the RHR pump design operating pressure,
- Operate a minimum of five SRVs using the controls at the remote and alternate remote shutdown panels when RPV level reaches -150 in. indicated.

Reference F.7.3.d lists all remote shutdown operator manual actions.

Indication for the following parameters is located on the remote shutdown panels:

Reactor water level,
Reactor pressure,
Suppression pool water level,
Suppression pool water temperature,
Residual heat removal pump flow, and
Standby service water pump discharge pressure.

The Division 2 diesel generator supplied emergency lighting in the remote shutdown areas at el. 467 ft of the radwaste building has been evaluated to ensure the lighting will remain available in the event of a control room fire.

The remote post-fire shutdown system thus consists of the following:

RHR B (Division 2),
SW B (Division 2),
ADS/MSRV (Division 1 and Division 2),
Supporting HVAC systems (Division 2),
System status monitoring instrumentation, and
Supporting power train including DG-2 and Division 1 and Division 2 battery.

The automatic features of these systems, such as the RHR logic circuitry or auto-synchronizing of the diesel generator are not credited. Only those instruments which are designated as post-fire safe shutdown equipment been evaluated to ensure their availability in the event of fire.

Controls and instrumentation for the RCIC system are located on the remote shutdown panel. However, the RCIC system and the high-pressure core spray (HPCS) system have not been protected from the effects of a control room fire.

The major components for remote post-fire safe shutdown are listed in Table F.4-1.

F.4.4 FIRE AREA ANALYSES

F.4.4.1 Post-Fire Safe Shutdown

The potential consequences of fire damage are analyzed by evaluating the post-fire safe shutdown equipment by fire area. Post-fire safe shutdown equipment in the fire area is assumed damaged by the postulated fire, unless the equivalent level of fire protection specified

by Appendix R, Section III.G is provided or the configuration is within the basis of an approved deviation.

For fire areas outside the main control room, the equipment/cabling within the area is reviewed to ensure that redundant post-fire shutdown systems remain available. First, the area is assigned as Division 1 or Division 2 based on the train of post-fire safe shutdown equipment which would be lost due to a fire in the area. Any cabling or equipment of the redundant division (which is credited for operation of post-fire safe shutdown) which is located within the area is then identified. Equipment and cabling within the main control room is evaluated to ensure that a fire will not prevent remote shutdown.

Potential multiple high impedance faults are evaluated in Reference F.7.3.ee per the Reference F.7.2.w base case. Safe shutdown power supplies that do not meet the base case are credible and are addressed in Reference F.7.3.d.

Any spurious signal cables (those cables which could cause a malfunction if compromised by a hot short, open circuit, or short to ground) which could affect the post-fire safe shutdown are analyzed to identify the potential effects of fire on post-fire safe shutdown capability. Only one spurious actuation alone, with the effects of that actuation, are assumed to occur at a time for remote shutdown (Reference F.7.4.j). For normal shutdown, multiple spurious operations (MSO) is assumed per Reference F.7.2.x.

The adequacy of the construction of the fire area boundaries is evaluated as part of the fire hazards analysis by a comparison of the area fire hazards to the active and passive fire protection features and specific post-fire safe shutdown requirements.

The fire hazards analysis for certain areas is unique:

U-1. A fire hazards analysis is performed for primary containment (Fire Area R-2); however, the post-fire safe shutdown capability is not specifically evaluated as primary containment is inerted during power operation;

U-2. The main control room (Fire Area RC-10) is analyzed to ensure the remote shutdown system will remain available;

F.4.4.2 Control of Radioactive Release

A fire induced radioactive release to the environment can occur via one of the following mechanisms:

a. Inadvertent primary coolant release to the environment,

b. Inadvertent radwaste system release to the environment,

c. Contaminated smoke due to the combustion of radioactive material, and

d. Contaminated water produced as a product of fire suppression in areas containing radioactive material.

Normal plant operating procedures provide guidance for ensuring that appropriate design features are used to monitor and control the release of radioactivity to the environment which may occur as the result of a fire or fire fighting activities. Specific design features to be used will be determined at the time of the fire by health physics personnel and the Environmental Field Team, as necessary. The design features provided along with fire brigade training will ensure that any release of radiation due to fire will be controlled and monitored.

Reactor coolant system integrity is among several functional requirements necessary to achieve safe shutdown. Equipment necessary to meet these functional requirements has been identified and analyzed.

The liquid waste management system is discussed in Section 11.2. The system is designed to process potentially radioactive liquids from fire suppression activities in a manner which limits radiation exposure and controls the release of potentially radioactive material.

In the reactor building, turbine building, and radwaste building, contaminated liquid resulting from fire suppression activities in contaminated areas is routed through floor drains to the liquid waste management system. The HVAC exhaust vents in these buildings are provided with radiation monitors and can be isolated to limit the spread of smoke. In addition, procedural controls and fire brigade training stress the need to control and minimize the potential release of fire suppression water and smoke. Environmental field teams would be used as needed to monitor releases from the turbine generator, reactor, or radwaste buildings due to a significant fire.

Table F.4-1

Required Post-Fire Safe Shutdown (PFSS) Equipment
List of Primary Components

ADS/SRV SYSTEM

DIVISION 1 PFSS		DIVISION 2 PFSS		REMOTE SHUTDOWN	
EPN	FIRE AREA	EPN	FIRE AREA	EPN	FIRE AREA
MS-SPV-3DA	R-2	MS-SPV-3DB	R-2	MS-SPV-3DA	R-2
MS-SPV-4AA	R-2	MS-SPV-4AB	R-2	MS-SPV-4AB	R-2
MS-SPV-4BA	R-2	MS-SPV-4BB	R-2	MS-SPV-4BB	R-2
MS-SPV-4CA	R-2	MS-SPV-4CB	R-2	MS-SPV-4CB	R-2
MS-SPV-5BA	R-2	MS-SPV-5BB	R-2	MS-SPV-5BA	R-2
MS-SPV-5CA	R-2	MS-SPV-5CB	R-2	MS-SPV-5CA	R-2

HI-LO PRESSURE INTERFACE

DIVISION 1 PFSS		DIVISION 2 PFSS		REMOTE SHUTDOWN	
EPN	FIRE AREA	EPN	FIRE AREA	EPN	FIRE AREA
MS-V-2	R-2	MS-V-1	R-2	N/A	N/A
RCIC-V-45	R-6	N/A	N/A	N/A	N/A
RHR-V-8	R-1	RHR-V-9	R-2	RHR-V-9	R-2
RHR-V-53A	R-1	RHR-V-53B	R-1	RHR-V-53B	R-1
RHR-V-123A	R-2	RHR-V-123B	R-2	RHR-V-123B	R-2
RWCU-FCV-33	R-1	N/A	N/A	N/A	N/A
RWCU-V-34	R-1	N/A	N/A	N/A	N/A
RWCU-V-35	R-1	N/A	N/A	N/A	N/A

HVAC SYSTEM

DIVISION 1 PFSS		DIVISION 2 PFSS		REMOTE SHUTDOWN	
EPN	FIRE AREA	EPN	FIRE AREA	EPN	FIRE AREA
DEA-FN-11	DG-2	DEA-FN-21	DG-3	DEA-FN-21	DG-3
DEA-FN-12	DG-2	DEA-FN-22	DG-3	DEA-FN-22	DG-3
DMA-FN-11	DG-2	DMA-FN-21	DG-3	DMA-FN-21	DG-3
DMA-FN-12	DG-2	DMA-FN-22	DG-3	DMA-FN-22	DG-3
PRA-FN-1A	SW-1	PRA-FN-1B	SW-2	PRA-FN-1B	SW-2
RRA-FN-2	R-5	RRA-FN-3	R-4	RRA-FN-3	R-4
RRA-FN-11	R-1	N/A	N/A	N/A	N/A
RRA-FN-13	R-1	N/A	N/A	N/A	N/A
WMA-AD-51A1	RC-11	WMA-AD-51B1	RC-12	N/A	N/A
N/A	N/A	WMA-AD-52/1	RC-12	N/A	N/A
N/A	N/A	WMA-AD-52/2	RC-12	N/A	N/A
WMA-EHC-7A	RC-5	WMA-EHC-8	RC-6	WMA-EHC-8	RC-6
WMA-EHC-7B	RC-5				
WMA-FN-51A	RC-11	WMA-FN-51B	RC-12	N/A	N/A

Table F.4-1

Required Post-Fire Safe Shutdown (PFSS) Equipment
List of Primary Components

HVAC SYSTEM

DIVISION 1 PFSS		DIVISION 2 PFSS		REMOTE SHUTDOWN	
EPN	FIRE AREA	EPN	FIRE AREA	EPN	FIRE AREA
WMA-FN-52A	RC-11	WMA-FN-52B	RC-12	WMA-FN-52B	RC-12
WMA-FN-53A	RC-11	WMA-FN-53B	RC-12	WMA-FN-53B	RC-12
CCH-CR-1A	RC-13	CCH-CR-1B	RC-13	N/A	N/A
CCH-P-1A	RC-13	CCH-P-1B	RC-13	N/A	N/A

MECHANICAL EQUIPMENT

DIVISION 1 PFSS		DIVISION 2 PFSS		REMOTE SHUTDOWN	
EPN	FIRE AREA	EPN	FIRE AREA	EPN	FIRE AREA
RHR-RO-5A	R-5	RHR-RO-5B	R-4	RHR-RO-5B	R-4
N/A	N/A	RHR-V-19	R-4	RHR-V-19	R-4
RHR-V-31A	R-5	RHR-V-31B	R-4	RHR-V-31B	R-4
RHR-V-41A	R-2	RHR-V-41B	R-2	RHR-V-41B	R-2
RHR-V-50A	R-2	RHR-V-50B	R-2	RHR-V-50B	R-2
RHR-V-84A	R-5	RHR-V-84B	R-4	RHR-V-84B	R-4
N/A	N/A	RHR-V-89	R-4	RHR-V-89	R-4
RHR-V-731	R-5	RHR-V-732	R-4	N/A	N/A
SW-V-1A	SW-1	SW-V-1B	SW-2	SW-V-1B	SW-2
SW-V-224A	RC-11	SW-V-224B	RC-12	N/A	N/A
SW-V-225A	RC-11	SW-V-225B	RC-12	N/A	N/A
SW-V-227A	RC-11	SW-V-227B	RC-12	N/A	N/A
SW-V-822A	RC-11	SW-V-822B	RC-12	N/A	N/A
SW-V-823A	RC-11	SW-V-823B	RC-12	N/A	N/A

MSIV SYSTEM

DIVISION 1 PFSS		DIVISION 2 PFSS		REMOTE SHUTDOWN	
EPN	FIRE AREA	EPN	FIRE AREA	EPN	FIRE AREA
MS-V-28A	TG-1	MS-V-22A	R-2	MS-V-22A	R-2
MS-V-28B	TG-1	MS-V-22B	R-2	MS-V-22B	R-2
MS-V-28C	TG-1	MS-V-22C	R-2	MS-V-22C	R-2
MS-V-28D	TG-1	MS-V-22D	R-2	MS-V-22D	R-2

PFSS INSTRUMENTATION

DIVISION 1 PFSS		DIVISION 2 PFSS		REMOTE SHUTDOWN	
EPN	FIRE AREA	EPN	FIRE AREA	EPN	FIRE AREA
CMS-LR-3	RC-10	CMS-LR-4	RC-10	CMS-LI-2R	RC-9
CMS-TR-5	RC-10	CMS-TR-6	RC-10	CMS-TI-43R	RC-9
MS-LR/PR-623A	RC-10	MS-LR/PR-623B	RC-10	MS-LI-10	RC-9
				MS-PI-2	RC-9

Table F.4-1

Required Post-Fire Safe Shutdown (PFSS) Equipment
List of Primary Components

PFSS INSTRUMENTATION

DIVISION 1 PFSS		DIVISION 2 PFSS		REMOTE SHUTDOWN	
EPN	FIRE AREA	EPN	FIRE AREA	EPN	FIRE AREA
N/A	N/A	N/A	N/A	RHR-FT-1	M-21
RHR-FI-603A	RC-10	RHR-FI-603B	RC-10	RHR-FI-5	RC-9
SW-FI-9A	RC-10	SW-FI-9B	RC-10	SW-PI-32BR	RC-9
N/A	N/A	MS-SPV-126D	M-27	N/A	N/A

POWER DISTRIBUTION

DIVISION 1 PFSS		DIVISION 2 PFSS		REMOTE SHUTDOWN	
EPN	FIRE AREA	EPN	FIRE AREA	EPN	FIRE AREA
DG-GEN-DG1	DG-2	DG-GEN-DG2	DG-3	DG-GEN-DG2	DG-3
DO-P-1A	DG-4	DO-P-1B	DG-5	DO-P-1B	DG-5
DO-P-4A1	DG-2	DO-P-4B1	DG-3	DO-P-4B1	DG-3
DO-P-4A2	DG-2	DO-P-4B2	DG-3	DO-P-4B2	DG-3
DO-TK-1A	DG-4	DO-TK-1B	DG-5	DO-TK-1B	DG-5
DO-TK-3A	DG-8	DO-TK-3B	DG-9	DO-TK-3B	DG-9
DSA-AR-1A	DG-2	DSA-AR-1B	DG-3	DSA-AR-1B	DG-3
E-SM-DG1/7	DG-2	E-SM-DG2/8	DG-3	E-SM-DG2/8	DG-3
E-SM-7	RC-14	E-SM-8	RC-8	E-SM-8	RC-8
E-SL-71	RC-14	N/A	N/A	N/A	N/A
E-SL-73	RC-14	E-SL-83	RC-8	E-SL-83	RC-8

RHR SYSTEM

DIVISION 1 PFSS		DIVISION 2 PFSS		REMOTE SHUTDOWN	
EPN	FIRE AREA	EPN	FIRE AREA	EPN	FIRE AREA
RHR-FCV-64A	R-5	RHR-FCV-64B	R-4	RHR-FCV-64B	R-4
RHR-P-2A	R-5	RHR-P-2B	R-4	RHR-P-2B	R-4
RHR-V-3A	R-5	RHR-V-3B	R-4	RHR-V-3B	R-4
RHR-V-4A	R-5	RHR-V-4B	R-4	RHR-V-4B	R-4
RHR-V-6A	R-5	RHR-V-6B	R-4	RHR-V-6B	R-4
RHR-V-16A	R-1	RHR-V-16B	R-1	RHR-V-16B	R-1
RHR-V-17A	R-1	RHR-V-17B	R-1	N/A	N/A
N/A	N/A	RHR-V-23	R-4	N/A	N/A

Table F.4-1

Required Post-Fire Safe Shutdown (PFSS) Equipment
List of Primary Components

RHR SYSTEM

DIVISION 1 PFSS		DIVISION 2 PFSS		REMOTE SHUTDOWN	
EPN	FIRE AREA	EPN	FIRE AREA	EPN	FIRE AREA
RHR-V-24A	R-1	RHR-V-24B	R-4	RHR-V-24B	R-4
RHR-V-27A	R-1	RHR-V-27B	R-4	RHR-V-27B	R-4
N/A	N/A	RHR-V-40	R-4	N/A	N/A
RHR-V-42A	R-1	RHR-V-42B	R-21	RHR-V-42B	R-21
RHR-V-48A	R-5	RHR-V-48B	R-4	RHR-V-48B	R-4
N/A	N/A	RHR-V-49	R-4	RHR-V-49	R-4
RHR-V-68A	R-5	RHR-V-68B	R-4	RHR-V-68B	R-4
RHR-V-73A	R-5	RHR-V-73B	R-4	N/A	N/A
RHR-V-74A	R-5	RHR-V-74B	R-4	N/A	N/A
N/A	N/A	RHR-V-115	R-4	RHR-V-115	R-4
N/A	N/A	RHR-V-116	R-4	RHR-V-116	R-4
N/A	N/A	RHR-V-182	R-4	RHR-V-182	R-4

SW SYSTEM

DIVISION 1 PFSS		DIVISION 2 PFSS		REMOTE SHUTDOWN	
EPN	FIRE AREA	EPN	FIRE AREA	EPN	FIRE AREA
SW-P-1A	SW-1	SW-P-1B	SW-2	SW-P-1B	SW-2
SW-TCV-11A	RC-11	SW-TCV-11B	RC-12	N/A	N/A
SW-V-2A	SW-1	SW-V-2B	SW-2	SW-V-2B	SW-2
SW-V-12A	SW-1	SW-V-12B	SW-2	SW-V-12B	SW-2
SW-V-75A	R-5	SW-V-75B	R-1	N/A	N/A
N/A	N/A	SW-V-187A	R-1	SW-V-187A	R-1
N/A	N/A	SW-V-188A	R-1	SW-V-188A	R-1
SW-V-187B	R-1	SW-V-187B	R-1	SW-V-187B	R-1
SW-V-188B	R-1	SW-V-188B	R-1	SW-V-188B	R-1

AUXILIARY POWER DISTRIBUTION EQUIPMENT

DIVISION 1 PFSS		DIVISION 2 PFSS		REMOTE SHUTDOWN	
EPN	FIRE AREA	EPN	FIRE AREA	EPN	FIRE AREA
E-B1-1	RC-5	E-B1-2	RC-6	E-B1-2	RC-6
E-C1-1A	RC-4	E-C1-2A	RC-7	E-C1-2A	RC-7
E-C1-1B	RC-4	E-C1-2B	RC-7	E-C1-2B	RC-7
E-PNL-C1/1	RC-4	E-PNL-C1/2	RC-7	E-PNL-C1/2	RC-7
E-IN-3A	RC-4	E-IN-2A	RC-7	N/A	N/A
E-IN-3B	RC-4	E-IN-2B	RC-7	N/A	N/A

Table F.4-1

Required Post-Fire Safe Shutdown (PFSS) Equipment (Continued)
List of Primary Components

AUXILIARY POWER DISTRIBUTION EQUIPMENT

DIVISION 1 PFSS		DIVISION 2 PFSS		REMOTE SHUTDOWN	
EPN	FIRE AREA	EPN	FIRE AREA	EPN	FIRE AREA
E-DISC-MC7F/3A1	RC-11	E-DISC-8F4B1	RC-12	N/A	N/A
E-DP-S1/1	RC-4	E-DP-S1/2	RC-7	E-DP-S1/2	RC-7
E-DP-S1/1A	RC-10	E-DP-S1/2A	RC-10	N/A	N/A
E-DP-S1/1F	RC-14	E-DP-S1/2D	RC-9	E-DP-S1/2D	RC-9
E-DP-S1/1E	DG-2	E-DP-S1/2E	DG-3	E-DP-S1/2E	DG-3
E-ELP-7FD	RC-10	E-ELP-8FD	RC-10	N/A	N/A
E-ELP-7FDA	RC-10	E-ELP-8FDA	RC-10	N/A	N/A
E-MC-S1/1D	RC-4	E-MC-S1/2D	RC-7	E-MC-S1/2D	RC-7
E-MC-7A	RC-4	E-MC-8A	RC-7	E-MC-8A	RC-7
E-MC-7AA	DG-2	E-MC-8AA	DG-3	E-MC-8AA	DG-3
E-MC-7B	R-1	E-MC-8B	R-18	E-MC-8B	R-18
E-MC-7BA	R-1	E-MC-8BA	R-18	E-MC-8BA	R-18
E-MC-7BB	R-1	E-MC-8BB	R-4	E-MC-8BB	R-4
E-MC-7F	RC-11	E-MC-8F	RC-12	E-MC-8F	RC-12
E-PP-7A	RC-4	E-PP-8A	RC-7	E-PP-8A	RC-7
E-PP-7AA	RC-10	E-PP-8AA	RC-10	N/A	N/A
E-PP-7AAA	DG-2	E-PP-8AAA	DG-3	E-PP-8AAA	DG-3
E-PP-7AB	SW-1	E-PP-8AB	SW-2	E-PP-8AB	SW-2
E-PP-7AE	R-1	E-PP-8AF	RC-9	E-PP-8AF	RC-9
E-PP-7AG	SW-1	E-PP-8AG	SW-2	E-PP-8AG	SW-2
E-PP-7FA	RC-11	E-PP-8FA	RC-12	N/A	N/A
E-PNL-IN/3	RC-4	E-PNL-IN/2	RC-7	N/A	N/A
E-TR-7A	RC-4	E-TR-8A	RC-7	E-TR-8A	RC-7
E-TR-7AAA	DG-2	E-TR-8AAA	DG-3	E-TR-8AAA	DG-3
E-TR-7AF	SW-1	E-TR-8AF	SW-2	E-TR-8AF	SW-2
E-TR-7/71	RC-14	N/A	N/A	E-TR-8/83	RC-8
E-TR-7/73	RC-14	E-TR-8/83	RC-8	E-TR-8/83	RC-8
E-TR-7AF/1	SW-1	E-TR-8AF/1	SW-2	E-TR-8AF/1	SW-2
E-TR-7AAA/1	DG-2	E-TR-8AAA/1	DG-3	E-TR-8AAA/1	DG-3
E-SM-7/75/2	RC-14	E-TR-8A/2	RC-9	E-TR-8A/2	RC-9
E-TR-7FD	RC-10	E-TR-8FD	RC-10	E-B1-1	RC-5
E-TR-7A/1	RC-4	RHR-DISC-V/9	RC-7	E-DP-S1/1	RC-4
N/A	N/A	N/A	N/A	E-DP-S1/1F	RC-14

Table F.4-1

Required Post-Fire Safe Shutdown (PFSS) Equipment
List of Primary Components

AUXILIARY EQUIPMENT

DIVISION 1 PFSS		DIVISION 2 PFSS		REMOTE SHUTDOWN	
EPN	FIRE AREA	EPN	FIRE AREA	EPN	FIRE AREA
DELETED	DELETED	DELETED	DELETED	N/A	N/A
E-IR-21	SW-1	N/A	N/A	E-CP-ARS	RC-14
E-IR-P004	R-1	E-IR-22	SW-2	E-IR-22	SW-2
E-IR-P018	R-1	E-IR-P021	M-21	N/A	N/A
RCC-V-130	R-1	E-IR-P027	M-27	N/A	N/A
E-IR-66	R-1	N/A	N/A	N/A	N/A
E-CNTR-WMA/EHC/7A	RC-5	E-CNTR-WMA/EHC/8	RC-6	E-CNTR-WMA/EHC/8	RC-6
E-CNTR-WMA/EHC/7B	RC-5	RWCU-V-32	R-1	RWCU-V-32	R-1
WMA-FD-57	RC-11	SW-42-7BB6A	R-1	SW-42-7BB6A	R-1
WMA-RMS-FN/53B	RC-10	SW-42-7BA7A	R-1	SW-42-7BA7A	R-1
SW-42-8BB6A	R-4	SW-42-8BB6A	R-4	SW-42-8BB6A	R-4
SW-42-8BA10C	R-18	SW-42-8BA10C	R-18	SW-42-8BA10C	R-18

F.4.4.3 Scope of Areas Evaluated in Fire Hazards Analysis

Fire areas included in the fire hazards analysis are those plant areas within the primary plant structure and those remote buildings with credited post-fire safe shutdown equipment. See the following table for the listing of evaluated fire areas. The fire area boundaries are shown as fire rated barriers on Figures F.6-1 through F.6-5.

The outdoor yard area is not analyzed as a fire area in the F.4 fire hazards analysis for the following reasons:

- The yard has underground duct banks with post-fire safe shutdown cables that route from the Diesel and Radwaste buildings to the Service Water Pump houses. Each duct bank is a separate electrical division. Each divisional duct bank has at least one manhole. The manholes have spatial separation. Therefore, post-fire safe shutdown can be achieved in the event of a fire in a single duct bank,

- Remote buildings credited in the fire protection program (service water pump house 1 and 2, circulating water pump house, water filtration building 33) with nonrated barriers are sufficiently separated from each other and from the plant that a single exposure fire would not spread to more than one building,

- The Hydrogen Storage and Supply Facility (HSSF) is located approximately 0.6 miles southeast of the plant and stores approximately 9800 pounds of liquid and gaseous hydrogen. This separation ensures a fire or explosion at the HSSF has no impact on the operability of systems credited for post-fire safe shutdown (References F.7.3.bb, F.7.3.cc, and F.7.5.t). The Hydrogen Water Chemistry (HWC) system is not safety-related,

- Where nearby exposure hazards exist, plant buildings have rated fire barriers. See Sections F.2.2.14 through F.2.2.17, and

- Yard fire hazards are not postulated to impair the yard fire protection water supply system.

- The DG building south exterior wall is not fire rated and the HVAC air intake is not equipped with fire dampers. To ensure a yard fire does not spread to multiple DG fire areas, the exterior concrete pad is sloped to drain combustible liquids away from the building. Administrative control of transient combustibles ensures excessive amounts of combustibles are not stored within 10 feet of the DG building exterior. Yard structures and DG-4 are not placed within 50 feet of the non-rated south DG barrier.

The fire protection water supply buildings (circulating water pump house and water filtration building 33) are not analyzed as fire areas in the F.4 fire hazards analysis for the following reasons:

- They do not contain any post-fire safe shutdown equipment, other than the fire pumps,
- The water supply system has a sufficient capacity to provide the maximum water demand from either the primary or secondary supply,
- The redundant water supply buildings are sufficiently separated that a single exposure fire would not spread between the subject buildings, and
- The redundant water supply buildings are remote and would not be an exposure hazard to the plant.

The general service building (GSB) was originally considered in the fire hazards analysis. However, the GSB is not analyzed in the fire hazards analysis for the following reasons:

- The building does not contain any credited post-fire safe shutdown,
- The only safety-related equipment in the building are two motor-operated auxiliary steam isolation valves (AS-V-68A/68B) at 458 ft Column K.4-3.2. The isolation of the auxiliary steam system is a safety-related function since it is a potential high energy line break (HELB) source to the reactor building which could affect the qualified life of safety-related equipment. Since a GSB fire would not cause a HELB and a reactor building HELB need not be considered concurrent with a fire, the GSB area of the safety-related valves does not warrant a fire hazards analysis,
- The building is entirely isolated from the turbine and reactor building by 3-hr barriers, and
- Although GSB sprinkler and detection system alarms annunciate in the control room and use plant power, their inoperability has no impact on post-fire safe shutdown.

Building 25 (PAAP) is not analyzed in the fire hazards analysis for the following reasons:

- The building does not contain any components necessary for post-fire safe shutdown except for communication equipment. For a design basis fire in building 25, the communication system is not required.

- There are no safety related components is this building. The only connections to the plant distribution power system are made through manual disconnect switches that are normally open.

- The building is separated from the plant buildings by the yard and fire rated barriers.

The following is a listing of the fire areas and their post-fire safe shutdown code.

Diesel generator building - HPCS diesel generator room	1	DG-1
Diesel generator building - Diesel generator 1A room	1	DG-2
Diesel generator building - Diesel generator 1B room	2	DG-3
Diesel generator building - DG 1A diesel oil tank pump room	1	DG-4
Diesel generator building - DG 1B diesel oil tank pump room	2	DG-5
Diesel generator building - HPCS diesel oil tank pump room	#	DG-6
Diesel generator building - HPCS diesel day tank room	#	DG-7
Diesel generator building - DG 1A diesel day tank room	1	DG-8
Diesel generator building - DG 1B diesel day tank room	2	DG-9
Diesel generator building - Deluge valve equipment room	#	DG-10
Reactor building - General equipment area	1	R-1
Reactor building - Primary containment	U	R-2
Reactor building - HPCS pump room	#	R-3
Reactor building - RHR B pump room, pipe chase, pipe tunnels, H2 recombiner MCC room, heat exchanger rooms, and south valve rooms	2	R-4
Reactor building - RHR A pump room, pipe chase, pipe tunnels, heat exchanger rooms	1	R-5
Reactor building - RCIC pump room	2	R-6
Reactor building - RHR pump room	1	R-7
Reactor building - LPCS pump room	1	R-8
Reactor building - Stair A6	#	R-9
Reactor building - Elevator No. 2	#	R-10
Reactor building - Stair A5	#	R-11
Reactor building - Elevator No. 1	#	R-12
Reactor building - 422 ft lobby outside of stair A5	#	R-15
Reactor building - MCC room Division 2	2	R-18
Reactor building - South valve room	2	R-21
Reactor building - Instrument rack E-IR-P009 enclosure	2	M-9
Reactor building - Instrument rack E-IR-P021 enclosure	2	M-21
Reactor building - Instrument rack E-IR-P027 enclosure	2	M-27
Radwaste control building - Radwaste general nonvital equipment area	2	RC-1
Radwaste control building - Cable spreading room	1	RC-2

Radwaste control building - Cable chase		1	RC-3
Radwaste control building - Electrical equipment room No. 1		1	RC-4
Radwaste control building - Battery room No. 1		1	RC-5
Radwaste control building - Battery room No. 2		2	RC-6
Radwaste control building - Electrical equipment room No. 2		2	RC-7
Radwaste control building - Switchgear room No. 2		2	RC-8
Radwaste control building - Remote shutdown room		2	RC-9
Radwaste control building - Main control room		U	RC-10
Radwaste control building - Unit A - air-conditioning room		1	RC-11
Radwaste control building - Unit B - air-conditioning room		2	RC-12
Radwaste control building - Communications room, instrument shop, chiller area, and HVAC chase		2	RC-13
Radwaste control building - Switchgear room No. 1		1	RC-14
Radwaste control building - Stair A8 and room C100		#	RC-15
Radwaste control building - Stair A7		#	RC-16
Radwaste control building - Elevator No. 4 and room C504		#	RC-17
Radwaste control building - Stair A13		#	RC-18
Radwaste control building - Corridor C205		2	RC-19
Radwaste control building - PASS area/pipe chase		1	RC-20
Reactor recirculation pump ASD building		#	ASD
Standby service water pump house 1A		1	SW-1
Standby service water pump house 1B		2	SW-2
Turbine generator building - General equipment area		2	TG-1
Turbine oil storage room	Fire zone TG-2	#	
Auxiliary boiler room	Fire zone TG-5	#	
Hydrogen seal oil room	Fire zone TG-7	#	
Turbine oil reservoir room	Fire zone TG-9	#	
West transformer vault	Fire zone TG-10	#	
East transformer vault	Fire zone TG-11	#	
441 ft southern corridors	Fire zone TG-12	2	
Turbine generator building – Stair A1		#	TG-3
Turbine generator building – Elevator No. 3		#	TG-4
Turbine generator building – Stair A3		#	TG-6
Turbine generator building – Stair A4		#	TG-8

LEGEND

Plant Fire Area Identification

The prefix of the fire area number corresponds to the building in which the fire area is located as follows:

ASD	Reactor recirculation pump ASD building
DG	Diesel generator building
M	Instrument Rack room
R	Reactor building
RC	Radwaste/control building
S	Service building
SW	Standby service water pump house(s)
TG	Turbine generator building

See Figures F.6-1 through F.6-5 for fire area locations.

Explanation of Codes

\# This code indicates that this fire area does not contain equipment or cables for either division of post-fire safe shutdown equipment.

1 This code indicates that this fire area contains Division 1 post-fire safe shutdown equipment or cables that are exposed to the fire and not protected. Division 1 fire areas that contain Division 2 post-fire safe shutdown equipment or cables are required to be protected or justified.

2 This code indicates that this fire area contains Division 2 post-fire safe shutdown equipment or cables that are exposed to the fire and not protected. Division 2 fire areas that contain Division 1 post-fire safe shutdown equipment or cables are required to be protected or justified.

U This code indicates that this fire area has been uniquely analyzed for post-fire safe shutdown. Refer to the fire hazards analysis methodology in Section F.4.4.

F.4.4.4 REDACTED

.

–

F.5 ESSENTIAL FIRE PROTECTION SYSTEM OPERABILITY/TESTING PROGRAM

The operability requirements, compensatory actions, and testing requirements for the essential fire protection systems are located in Licensee Controlled Specification (LCS) 1.10, Fire Protection.

F.6 FIRE PROTECTION ARRANGEMENT DRAWINGS

F.6-1 Fire Area Boundary Plan - Ground Floor

F.6-2 Fire Area Boundary Plan - Mezzanine Floors

F.6-3 Fire Area Boundary Plan - Operating Floor

F.6-4 Fire Area Boundary Plan - Reactor Building Miscellaneous Elevations

F.6-5 Fire Area Boundary Plan - Miscellaneous Floors and Buildings

F.6-6 Zones of Limited Combustibles, Reactor Building

F.6-7 Fire Suppression System Plan 437', 441'

F.6-8 Fire Suppression System Plan 467', 471'

F.6-9 Fire Suppression System Plan 501', 525'

F.6-10 Fire Suppression System Plan, Reactor Building, Miscellaneous Elevations

F.6-11 Fire Suppression System Plan, Miscellaneous, Floors and Buildings

F.6-12 Post Fire Safe Shutdown - Residual Heat Removal and Automatic Depressurization Systems Piping and Instrument Diagram

F.6-13 Post Fire Safe Shutdown - Nuclear Boiler Instrumentation System Piping and Instrument Diagram

F.6-14 Post Fire Safe Shutdown - Standby Service Water System Piping and Instrument Diagram

F.6-15 Post Fire Safe Shutdown - Radwaste Building Heating, Ventilating, and Air Conditioning Piping and Instrument Diagram

F.6-16 Post Fire Safe Shutdown - Reactor Building Heating, Ventilating, and Air Conditioning Piping and Instrument Diagram

F.6-17 Post Fire Safe Shutdown - Standby Service Water Pumphouses and Diesel Generator Building Heating, Ventilating, and Air Conditioning Piping and Instrument Diagram

F.6-18 Access Egress for Post-Fire Safe Shutdown Activities - Ground / Mezzanine Floors

F.6-19 Access Egress for Post-Fire Safe Shutdown Activities - Operating Floor

F.6-20 Access Egress for Post-Fire Safe Shutdown Activities - Miscellaneous Reactor Building Floors

F.6-21 Fire Main Ring Header

F.7 FIRE PROTECTION PROGRAM REFERENCES

F.7.1 REGULATORY DOCUMENTS/OTHER FSAR FIRE PROTECTION COMMITMENTS

F.7.1.1 Columbia Generating Station Regulatory Requirements

a. 10 CFR 50.48, Fire Protection

b. 10 CFR 50, Appendix A, General Design Criterion 3, Fire Protection

c. Facility Operating License (FOL) Condition 2.C.(14), Fire Protection Program

d. 40 CFR 63 Subpart ZZZZ, National Emissions Standards for Hazardous Air Pollutants for Stationary Reciprocating Internal Combustion Engines, Table 2.d(4), Emergency Stationary CI RICE and Black Start Stationary CI RICE.

F.7.1.2 Columbia Generating Station Commitments

a. Branch Technical Position (BTP) Auxiliary Power Conversion Systems Branch (APCSB) 9.5-1, Appendix A, Guidelines for Fire Protection for Nuclear Power Plants Docketed Prior to July 1, 1976 (see Table F.3-1)

b. 10 CFR 50 Appendix R, Fire Protection Program for Nuclear Power Facilities Operating Prior to January 1, 1979 (see Table F.3-2)

c. FSAR Appendix F Fire Protection Evaluation

d. Section 1.2.2.12.11, Fire Protection System

e. Section 3.1.2.1.3, Criterion 3 - Fire Protection

f. Section 8.3.1.4, Independence of Redundant Systems

g. Section 9.5.2, Communication Systems

h. Section 9.5.3, Plant Lighting Systems

i. Sections 13.1.2.3.4 and 13.2.2.5, Fire Brigade

j. Section 13.1.3.3.3, Fire Protection Engineer

k. Licensee Controlled Specification 1.10, Fire Protection

l. Emergency Plan

m. Operational Quality Assurance Program Description (OQAPD) which commits to Regulatory Guide 1.189 (April 2001), Section 1.7.10, “Audits”

n. Section A.2.1, Aging Management Programs

F.7.2 INDUSTRY GUIDANCE

a. Regulatory Guide 1.189, Fire Protection for Nuclear Power Plants

b. BTP Chemical Engineering Branch (CMEB) 9.5-1 Guidelines for Fire Protection for Nuclear Power Plants, Revision 2, July 1, 1981

c. NUREG 0800 Standard Review Plan, Section 9.5.1, Fire Protection Program, Revision 3, July 1981

d. BTP ASB 3-1, Rev. 1, 1981, Protection Against Postulated Piping Failures in Fluid Systems Outside Containment (attached to SRP 3.6.1)

e. NRC Inspection and Enforcement Manual, Inspection Procedure 64100, Post-Fire Safe Shutdown, Emergency Lighting and Oil Collection, Inspection Procedure 64704, Fire Protection/Prevention Program

f. NRC Generic Letters (GL), applicable sections of: GL 77-02, GL dated 9/7/79, GL 81-04, GL 81-12, GL dated 4/7/82, GL 82-21, GL 83-33, GL 85-01, GL 86-10, GL 86-10 Supplement 1, GL 88-12, GL 88-20 Supplement 4, GL 92-08, GL 92-08 Supplement 1, GL 93-06

g. NRC Information Notices (IN), applicable sections of: IN 80-05, IN 80-11, IN 82-28, IN 83-41, IN 83-69, IN 84-09, IN 84-16, IN 84-34, IN 84-57, IN 84-92, IN 85-09, IN 85-85, IN 86-17, IN 86-35, IN 87-14, IN 87-50, IN 88-04, IN 88-04 Supplement 1, IN 88-05, IN 88-05, IN 88-56, IN 88-60, IN 88-64, IN 89-52, IN 89-63, IN 90-23, IN 91-17, IN 91-47, IN 91-77, IN 91-79, IN 92-18, IN 92-28, IN 92-46, IN 92-52, IN 92-55, IN 92-82, IN 93-40, IN 93-41, IN 94-12, IN 94-22, IN 94-26, IN 94-28, IN 94-31, IN 94-35, IN 94-58, IN 94-86, IN 94-86 Supplement 1, IN 95-27, IN 95-33, IN 95-36, IN 95-36 Supplement 1, IN 95-48, IN 95-49, IN 95-49 Supplement 1, IN 95-52, IN 95-52 Supplement 1, IN 97-01, IN 97-37, IN 97-59, IN 97-70, IN 97-72, IN 97-73, IN 97-82, IN 98-31, IN 99-05, IN 99-07, IN 99-17

h. NRC Policy Paper, Secretary of Commission (SECY), applicable sections of: SECY-81-114, SECY-82-268, SECY-83-269, SECY-85-306 and 306B, SECY-93-143, SECY-93-232, SECY-94-090, SECY-94-127, SECY-95-034, SECY-96-134, SECY-96-146, SECY-97-127, SECY-98-058, SECY-98-230, SECY-99-140, SECY-99-152, SECY-99-182, SECY-99-204

i. National Fire Protection Association (NFPA) Codes. See Section F.2.1 for major committed codes.

j. Fire Protection Handbook, National Fire Protection Association, Boston, Massachusetts

k. Underwriters Laboratories (UL) listings from UL Building Materials Directory and UL Fire Resistance Directory (current editions)

l. ASTM E 84-1981, Standard Test Method for Surface Burning Characteristics of Building Materials

m. ASTM E 119-1988, Fire Test of Building Construction and Materials

n. ASTM E 136-1982, Standard Test Method for Behavior of Materials in a Vertical Tube Furnace at 750°C

o. UL 910-1985, Test Method for Fire and Smoke Characteristics of Electrical and Fiber Optic Cables Used in Air Handling Spaces

p. Factory Mutual Approval Guide (current editions)

q. IEEE 383-1974, Standard for Type Test of Class 1E Electric Cables, Field Splices, and Connections for Nuclear Power Generating Stations

r. Regulatory Guide 1.52, Revision 1, Design, Testing, and Maintenance Criteria for Atmosphere Cleanup System Air Filtration and Adsorption Units of Light-Water-Cooled Nuclear Plants

s. ANSI A21.4, Cement-Mortar Lining for Cast-Iron and Ductile-Iron Pipe Fittings for Water

t. ASME Boiler and Pressure Vessel Code, Section III, Rules for the Construction of Nuclear Power Plant Components

u. Nuclear Electric Insurance Limited, Members Manual, Chapter 7, Primary Property Loss Control Programs

v. Washington Administrative Code (WAC)

w. NEI 00-01, Revision 1, Guidance for Post-Fire Safe Shutdown Circuit Analysis, Appendix B.2, Justification for the Elimination of Multiple High Impedance

x. NEI 00-01, Revision 2, Guidance for Post-Fire Safe Shutdown Circuit Analysis, Section 4 and Appendix G; as endorsed by Regulatory Guide 1.189 Revision 2

F.7.3 CALCULATIONS/TECHNICAL MEMOS

a. CE-02-90-39, Fire Resistance Rating of Hollow Concrete Block

b. FP-02-85-03, Combustible Loading Calculation

c. CVI 981-01,3, "GE14 Fuel Design Cycle-Independent Analyses for Energy Northwest Columbia Generating Station"

d. NE-02-85-19, Revised Appendix R Safe Shutdown Analysis

e. NE-02-84-17, Bio-Shield Penetration Analysis for Fire Protection

f. NE-02-86-23, Temperature Response of Structural Components to Appendix R Fire

g. NE-02-86-39, Evaluation of Structural Supports for One Hour Fire Barriers

h. DELETED

i. DELETED

j. DELETED

k. NE-02-94-35, Post-fire Safe Shutdown System Impacts

l. FP Flooding calculations: ME-02-02-23, ME-02-02-32, ME-02-02-40, ME-02-02-41, ME-02-02-43

m. HVAC/Room Heatup PFSS Calculations ME-02-99-06, ME-02-99-18, and ME-02-99-22, and CVI 1097-01,1.

n. B&R 2.05.01, Calculation for Battery and Battery Charger 250 V DC and 24 V DC

o. B&R 2.06.20, Calc for Cable Ampacity Verification for Conduit and Tray

p. B&R 7.10.12, Calculation For FP of Instrument Tubing

q. TM-1308, Evaluation of Potential Plant Transients Due to Postulated 10 CFR 50 Appendix R Fire

r. TM-2007, Reactor Building Instrument Rack Fire Hazards Analysis

s. TM-2043, Augmented Quality Requirements

t. TM-2075, Mitigation of Radiological Releases from a Fire

u. TM-2103, Leakage Requirements of Penetration Seals

v. ME-02-89-11, Calculation of Frost Protection of Warehouse Complex Fire Mains

w. ME-02-98-15, Evaluation of Fire Protection System for Water Hammer Effects

x. ME-02-99-05, Fire Protection System Water Hammer Analysis with Vacuum Breakers and Soft Start Electric Pumps

y. E/I-02-01-01, Sizing Calculation for the Plant PBX Telephone System Replacement Battery (VRLA type cells).

z. ENW-CGS-FHA-02, SL-5573, Columbia Generating Station Independent Spent Fuel Storage Installation Fire Hazards Analysis

aa. ENW-CGS-FHA-01, ISFSI Fire Hazards Calculation

bb. CE-02-03-19, ABS Consulting Report 1192510-R-002, “Frequency Estimation of Hydrogen Line and Hydrogen Storage Tank Explosions.”

cc. CE-02-03-20, ABS Consulting Report 1192510-C-001, “HSSF Energetic Events Analysis."

dd. TM-1235, Appendix R Dedicated Volume of Water for Fire Protection

ee. TM-2161, Technical Evaluation of High Impedance Faults in Accordance with NEI 00-01 Revision 1

ff. NE-02-13-02, Hazards Analysis – Radio Obsolescence Project

gg. CVI 981-01, 134 “GNF2 Fuel Design Cycle-Independent Analyses for Energy Northwest Columbia Generating Station”

F.7.4 APPLICABLE NRC SAFETY EVALUATION REPORTS

a. NUREG-0892, Safety Evaluation Report Related to the Operation of WPPSS Nuclear Project No. 2, March 1982

b. NUREG-0892, Safety Evaluation Report Related to the Operation of WPPSS Nuclear Project No. 2, Supplement 1, August 1982

c. Fire Protection Supplemental Safety Evaluation Report - WPPSS Nuclear Project No. 2, dated December 27, 1982

d. Fire Protection Supplemental Safety Evaluation Report - WPPSS Nuclear Project No. 2, dated March 17, 1983

e. NUREG 0892, Safety Evaluation Report Related to the Operation of WPPSS Nuclear Project No. 2, Supplement No. 3, May 1983

f. NUREG 0892, Safety Evaluation Report Related to the Operation of WPPSS Nuclear Project No. 2, Supplement No. 4, December 1983

g. Letter GI2-84-100, dated August 24, 1986, Supplemental Safety Evaluation

h. Letter GI2-86-020, dated March 14, 1986, Safety Evaluation Report Washington Nuclear Project No. 2 Appendix R Requirements - Noncompliance

i. Letter GI2-86-0089, R. M. Bernero to D. F. Kirsh, dated December 4, 1986, Evaluation of WNP-2 Fire Protection Analysis, with attached Safety Evaluation Report

j. Letter LI2-87-025, dated November 11, 1987, Fire Protection Safety Evaluation Report - FSAR Amendment No. 37, Washington Nuclear Project Number 2 (WNP-2)

k. Letter GI2-89-042, dated May 12, 1989, Safety Evaluation-Report Input WNP-2: Underground Fire Main Analysis

l. Letter GI2-89-048, dated May 22, 1989, Safety Evaluation by the Office of Nuclear Reactor Regulation, Evaluating Implementing Details of the Approved Fire Protection Program, Washington Public Power Supply System Nuclear Project No. 2

m. Letter GI2-89-051, dated May 25, 1989, Issuance of Amendment No. 67 to Facility Operating License No. NPF-21 - WPPSS Nuclear Project No. 2. [includes new Fire Protection License Condition 2.c.(14)]

F.7.5 OTHER MISCELLANEOUS

a. Letter GO2-82-396, dated April 22, 1982, Subject: Nuclear Plant No. 2 Response to SER on FSAR Section 9.5.1 Fire Protection Program

b. Letter GO2-83-243, dated March 21, 1983, Subject: Fire Protection Safe Shutdown Analysis

c. Letter GO2-86-613, dated June 30, 1986, Subject: Nuclear Plant No. 2, Operating License NPF-21, WNP-2 Fire Protection Program, Request for Additional Information

d. Letter GO2-88-006, dated January 6, 1988, Subject: WNP-2 Fire Protection Reevaluation Status Report

e. Letter GO2-88-008, dated January 11, 1988, Subject: Nuclear Plant No. 2 Fire Protection and Safety Shutdown Capability, Response to Safety Evaluation Report

f. Letter GO2-88-090, dated April 15, 1988, Subject: Nuclear Plant No. 2 Fire Protection and Safety Shutdown Capability, Response to Safety Evaluation Report, Supplemental Information

g. Letter GO2-88-155, dated July 15, 1988, Subject: Nuclear Plant No. 2 Fire Protection and Safety Shutdown Capability, Response to Safety Evaluation Report, Supplemental Information

h. Letter GO2-88-222, dated October 28, 1988, Subject: Nuclear Plant No. 2 Fire Protection and Safety Shutdown Capability, Response to Safety Evaluation Report (Revised Response)

i. Letter GO2-88-256, dated November 30, 1988, Subject: Nuclear Plant No. 2, Operating License NPF-21, Fire Protection Reevaluation Report - Status Report

j. GE Topical Report NEDO-10466-A, Power Generation Control Complex Design Criteria and Safety Evaluation (same as March 1978 NEDO-10466 referenced in SER)

k. DELETED

l. DELETED

m. Design Specification Division 200, Section 209, Post Fire Safe Shutdown (PFSS) Analysis Requirements

n. Engineering Standards Manual EES-1, Cable and Raceway Penetration Schedule (CARPS), EDISON/SAFE Database.

o. Engineering Standards Manual EES-5, General Fuse Selection Criteria

p. PFSS Fire Wrap Database

q. Penetration Seal Tracking System (PSTS) Database

r. Warnock Hersey International Fire Test File WHI-0495-0799 and 0800, Report of the Fire Endurance and Hose Stream Testing of Fire Rated Door Assembly Installed with Excessive Clearances, WNP-2 QA Vault Reel 502, Location 1-69

s. GE Topical Report, NEDE-24988-P, Analysis of Generic BWR Safety/Relief Valve Operability Test Results, October 1981

t. Electric Power Research Institute (EPRI), Guidelines for Permanent BWR Hydrogen Water Chemistry Installations – 1987 Revision, NP-5283-SR-A, September 1987.

u. INPO OE18226, Test Failure of Meggitt Safety System Inc. Cable, dated March 16, 2006.

F.7.6 FIRE PROTECTION ENGINEERING EVALUATIONS

a. Fire Protection File (FPF) 1.1 Items 13 through 61, Overall Qualification of Penetration Seals

b. FPF 1.1 Item 12, Penetration Seal Fire Test Review Acceptance Criteria

c. FPF 1.1 Item 16, Internal Conduit Sealing Criteria

d. FPF 1.5 Item 2, Consolidation of Fire Areas R-17 and R-19 with Fire Area R-4

e. FPF 1.7 Item 19, Evaluation of WNP-2 Vertical Cable Tray Fire Breaks

f. FPF 1.5 Item 3, Evaluation of Fire Area Boundary Between Fire Area DG-2 and DG-3

g. FPF 1.5 Item 4, Thermo-Lag Coated Wall and Blind Corridor

h. FPF 3.2 Item 3, Emergency Diesel Fuel Flash Point

i. FPF 1.1 Item 56, GL 86-10 Evaluation - Seal R206-5052

j. FPF 1.11 Item 2, Qualification of Whittaker MI Cable as a 3-hr Raceway Fire Barrier

k. FPF 1.2.2 Item 1, Analysis of 3M Fire Barrier Wrap – Conduit 2ADS-32-2

l. FPF 1.12 Item 2, Qualification of Thermo-Lag 330-1 as a Steel Fireproof Coating

m. FPF 1.2.3 Item 2, Qualification of Darmatt KM-1 Raceway Fire Barriers

n. FPF 3.22 Item 2, Thermo-Lag Resolution - Impact of Changes to Fire Area PFSS Divisions

o. FPF 2.1 Item 34, Compliance With NFPA 72E-1974 Smoke Detector Placement

p. FPF 2.6 Item 30, Adequacy of DG Building Heat Collectors and Water Spray Nozzles Remote From Ceiling

q. FPF 1.1 Item 40, Re-Analysis of NRC Information Notice 88-60

r. FPF 2.13 Item 13, Fire Brigade Equipment

s. FPF 2.10 Item 30, Control Room Habitability Smoke Intrusion Analysis

t. FPF 3.2 Item 2, Main Control Room Carpet Addition

u. FPF 4.1 Item 2, Normal Shutdown Manual Action Feasibility Review

v. FPF 3.7 Item 44, Scope of Augmented, OQAPD, and Essential Fire Protection Systems

w. FPF 2.15 Item 1, Reanalysis of Columbia Fire System Surveillance

x. FPF 1.12 Item 24, Fire-Induced Boiling of Fluid in Instrument Tube Sensing Lines

y. FPF 1.13 Item 2, Flexible Steel Conduit/Siltemp Fire Resistance Evaluation

z. FPF 3.6 Item 3, Fire Brigade Trainer Qualifications

aa. FPF 1.12 Item 25, Qualification of Instrument Tube supports

bb. FPF 2.1 Item 50, Fire Alarm Component Test Evaluation

F.7.7 FIRE PROTECTION REFERENCE DRAWINGS

a. FM892-1, Fire Area Boundary Plan - Ground Floor

b. FM892-2, Fire Area Boundary Plan - Mezzanine Floors

c. FM892-3, Fire Area Boundary Plan - Operating Floor

d. FM892-4, Fire Area Boundary Plan - Reactor Building Miscellaneous Elevations

e. FM892-5, Fire Area Boundary Plan - Miscellaneous Floors and Buildings

f. FM892-6, Zones of Limited Combustibles, Reactor Building

g. FM892-7, Fire Suppression System Plan 437', 441'

h. FM892-8, Fire Suppression System Plan 467', 471'

i. FM892-9, Fire Suppression System Plan 501', 525'

j. FM892-10, Fire Suppression System Plan, Reactor Building, Miscellaneous Elevations

k. FM892-11, Fire Suppression System Plan, Miscellaneous, Floors and Buildings

l. M515-1, M515-4, and M515-5, Flow Diagram - Fire Protection System

m. M515-2, Flow Diagram - Fire Protection System - Details

n. M515-3, Flow Diagram - Fire Protection System - CO_2 Distribution

o. E948, Raceway Fire Barrier Location Drawings

p. D-DM-100, Darmatt KM-1 Installation Details

q. PFSS One-Lines and PFSS System P&IDs

r. M932-1 and M932-2, Fire Main Ring Header

s. FM892-12, Access-Egress for PFSS Activities – 437', 441', 467', 471', and Miscellaneous Floors

t. FM892-13, Access-Egress for PFSS Activities – Operating Floor Plan at 501' and 525'

u. FM892-14, Access-Egress for PFSS Activities – Reactor Building Miscellaneous Plans

F.7.8 FIRE PROTECTION PROGRAM IMPLEMENTING PROCEDURES

a. Site-Wide Procedure (SWP), SWP-FPP-01, Nuclear Fire Protection Program

b. PPM 1.3.10, Plant Fire Protection Program Implementation, includes

1. Emergency response capability (Fire Brigade)
2. Fire response and reporting
3. Surveillance, inspection, and testing
4. Safe shutdown capability
5. Miscellaneous use of fire system water
6. Miscellaneous Fire Protection Requirements
7. B5b Program Responsibilities
8. Fire Loss Prevention
9. Use of Fire PSA

c. PPM 1.3.10A, Control of Ignition Sources

d. PPM 1.3.10B, Active Fire System Operability and Impairment Control

e. PPM 1.3.10C, Control of Combustibles

f. PPM 1.3.57, Barrier Impairment

g. ABN-FIRE, Fire

h. ABN-CR-EVAC, Control Room Evacuation and Remote Cooldown

i. PPM 15 Volume Series Inspection, Test, and Surveillance Procedures

j. Industrial Safety Program Manual, Chapter 10, “Fire Protection and Life Safety”

k. Fire Protection Program Manual

l. ENG-PRG-03, License Renew Implementation

Appendix I

LICENSING REVIEW GROUP ISSUES

TABLE OF CONTENTS

Section *Page*

I.1 INTRODUCTION I.1-1

I.2 CONTAINMENT SYSTEMS BRANCH

CSB-1 STEAM BYPASS OF THE SUPPRESSION POOL I.2-1
CSB-2 POOL DYNAMIC LOCA AND SRV LOADS I.2-1
CSB-3 CONTAINMENT PURGE SYSTEM I.2-2
CSB-4 COMBUSTIBLE GAS CONTROL I.2-2
CSB-5 CONTAINMENT LEAKAGE TESTING I.2-2

I.3 CORE PERFORMANCE BRANCH

CPB-1 LOAD ASSESSMENT OF FUEL ASSEMBLY COMPONENTS I.3-1
CPB-2 WATERSIDE CORROSION I.3-1
CPB-3 CHANNEL BOX WEAR I.3-2
CPB-4 FUEL CLADDING, SWELLING, AND RUPTURE MODELS I.3-2
CPB-5 FISSION GAS RELEASE I.3-3
CPB-6 STABILITY ANALYSIS I.3-3
CPB-7 CHANNEL BOX DEFLECTION I.3-4

I.4 INSTRUMENTATION AND CONTROL SYSTEMS BRANCH

ICSB-1 PHYSICAL SEPARATION AND ELECTRICAL ISOLATION I.4-1
ICSB-2 ANTICIPATED TRANSIENT WITHOUT SCRAM (ATWS) I.4-1
ICSB-3 TEST TECHNIQUES I.4-2
ICSB-4 SAFETY SYSTEM SETPOINTS I.4-2
ICSB-5 DRAWINGS I.4-3
ICSB-6 RCIC CLASSIFICATION I.4-3
ICSB-7 SAFETY-RELATED DISPLAY I.4-3
ICSB-8 ROD BLOCK MONITOR I.4-4
ICSB-9 MSIV LEAKAGE CONTROL SYSTEM I.4-5

Appendix I

LICENSING REVIEW GROUP ISSUES

TABLE OF CONTENTS (Continued)

Section *Page*

I.5 MATERIALS ENGINEERING BRANCH

MTEB-1 PRESERVICE AND INSERVICE INSPECTION OF CLASS 1, 2, AND 3 COMPONENTS PER 10 CFR 50.55a(g)..... I.5-1
MTEB-2 EXEMPTIONS FROM APPENDIX G AND H TO 10 CFR 50..... I.5-1
MTEB-3 EXEMPTIONS FROM APPENDIX G AND H TO 10 CFR 50..... I.5-1
MTEB-4 REACTOR TESTING AND COOLDOWN LIMITS..... I.5-2
MTEB-5 GENERAL DESIGN CRITERION 51..... I.5-2

I.6 MECHANICAL ENGINEERING BRANCH

MEB-1 ASYMMETRICAL LOCA AND SSE AND ANNULUS PRESSURIZATION LOADS ON REACTOR VESSEL INTERNALS AND SUPPORTS I.6-1
MEB-2 PREOPERATIONAL VIBRATION ASSURANCE PROGRAM..... I.6-5
MEB-3 DYNAMIC RESPONSE COMBINATION USING THE SRSS TECHNIQUE I.6-5
MEB-4 OBE PLUS SRV FATIGUE ANALYSIS..... I.6-9
MEB-5 STRESS CORROSION CRACKING OF STAINLESS STEEL COMPONENTS - DESIGN MODIFICATION..... I.6-9
MEB-6 PUMP AND VALVE OPERABILITY ASSURANCE PROGRAM..... I.6-10
MEB-7 BOLTED CONNECTIONS FOR SUPPORTS I.6-11
MEB-8 PUMP AND VALVE INSERVICE TEST PER 10 CFR 50.55a(g)..... I.6-17
MEB-9 REVIEW OF IN SITU TEST PROGRAM OF THE SAFETY/RELIEF VALVE I.6-17
MEB-10 CRACKING OF JET PUMP HOLD-DOWN BEAMS..... I.6-18
MEB-11 CONTROL ROD DRIVE RETURN LINE I.6-18
MEB-12 CONFIRMATORY PIPING ANALYSIS..... I.6-19

I.7 POWER SYSTEMS BRANCH

PSB-1 LOW OR DEGRADED GRID VOLTAGE..... I.7-1
PSB-2 TEST RESULTS FOR THE DIESEL GENERATORS I.7-1
PSB-3 CONTAINMENT ELECTRICAL PENETRATIONS..... I.7-2
PSB-4 ADEQUACY OF THE 120 V AC RPS POWER SUPPLY I.7-3

Appendix I

LICENSING REVIEW GROUP ISSUES

TABLE OF CONTENTS (Continued)

Section *Page*

PSB-5 THERMAL OVERLOAD MARGIN..... I.7-3
PSB-6 RELIABILITY OF DIESEL GENERATOR I.7-4
PSB-7 PERIODIC DIESEL GENERATOR TESTING I.7-5

I.8 REACTOR SYSTEMS BRANCH

RSB-1 INTERNALLY GENERATED MISSILES I.8-1
RSB-2 CONTROL ROD SYSTEM..... I.8-1
RSB-3 SAFETY/RELIEF VALVES I.8-2
RSB-4 TRIP OF RECIRCULATION PUMPS TO MITIGATE ATWS I.8-2
RSB-5 DETECTION OF INTERSYSTEM LEAKAGE..... I.8-3
RSB-6 REACTOR CORE ISOLATION COOLING PUMP SUCTION I.8-3
RSB-7 SHUTDOWN UNINTENTIONALLY OF THE REACTOR CORE ISOLATION COOLING SYSTEM I.8-3
RSB-8 RHR ALTERNATE SHUTDOWN DEMONSTRATION I.8-4
RSB-9 CATEGORIZATION OF VALVES WHICH ISOLATE RHR FROM REACTOR COOLANT SYSTEM..... I.8-4
RSB-10 AVAILABLE NET POSITIVE SUCTION HEAD I.8-4
RSB-11 ASSURANCE OF FILLED ECCS LINE I.8-5
RSB-12 OPERABILITY OF ADS I.8-6
RSB-13 LEAKAGE RATE TESTING OF VALVES USED TO ISOLATE REACTOR COOLANT SYSTEM..... I.8-6
RSB-14 OPERABILITY OF ECCS PUMPS..... I.8-6
RSB-15 ADDITIONAL LOCA BREAK SPECTRUM I.8-7
RSB-16 LOCA ANALYSIS I.8-8
RSB-17 OPERATOR ACTION, ANALYSIS OF CRACK IN THE RHR LINE..... I.8-9
RSB-18 LOCA ANALYSIS - DIVERSION OF LOW PRESSURE COOLANT INJECTION SYSTEM..... I.8-12
RSB-19 FAILURE OF FEEDWATER HEATER..... I.8-14
RSB-20 USE OF NONRELIABLE EQUIPMENT IN ANTICIPATED OPERATIONAL TRANSIENTS I.8-14
RSB-21 USE OF NON-SAFETY GRADE EQUIPMENT IN SHAFT SEIZURE ACCIDENT..... I.8-14
RSB-22 ATWS..... I.8-15

Appendix I

LICENSING REVIEW GROUP ISSUES

TABLE OF CONTENTS (Continued)

Section *Page*

RSB-23 PEACH BOTTOM TURBINE TRIP TESTS..... I.8-16
RSB-24 MCPR..... I.8-16
RSB-25 GEXL CORRELATION..... I.8-17
RSB-26 STABILITY EVALUATION..... I.8-17
RSB-27 SCRAM DISCHARGE VOLUME..... I.8-17
RSB-28 SRV SURVEILLANCE..... I.8-18

Appendix I

LICENSING REVIEW GROUP ISSUES

LIST OF TABLES

Number	*Title*	*Page*
MEB-1-1	*Load Combination and Acceptance Criteria for ASME Code Class 1, 2, and 3 NSSS Piping and Equipment*	*I.6-3*

Appendix I

LICENSING REVIEW GROUP ISSUES

LIST OF FIGURES

Number	*Title*
I.8-1	*Vessel Pressure Versus Time for a Crack in the RHR Line*
I.8-2	*Water Level Versus Time for a Crack in the RHR Line*
I.8-3	*Peak Cladding Temperature Versus Time for a Crack in the RHR Line*
I.8-4	*HTC at PCT Node Versus Time for a Crack in the RHR Line*

I.1 INTRODUCTION

The italicized information is historical and was provided to support the application for an operating license.

The Licensing Review Group (LRG) was formed in April 1980 to provide a vehicle for expediting the licensing process for General Electric (GE) boiling water reactors (BWR). The group was made up of six utilities, GE, and the consulting firm of KMC. Membership was at both the executive and technical level.

All applicants were in the near-term operating license (NTOL) stage of the licensing process. The basis of establishing the LRG consisted of the fact that most issues for NTOL BWR plants are identical or very similar. It was felt that this common ground could be used advantageously in the NRC review process. The NRC assigned a Project Licensing Manager to interface with the LRG.

All utilities represented in the LRG are identified below. The plants indicated are ordered chronologically in the licensing process, with LaSalle County-1 being the first for which NRC issued a Safety Evaluation Report (SER).

Plant	*Utility*
LaSalle County-1	*Commonwealth Edison Company*
Zimmer	*Cincinnati Gas and Electric Company*
Shoreham	*Long Island Lighting Company*
Susquehanna-1	*Pennsylvania Power and Light Company*
Fermi-2	*Detroit Edison Company*
Columbia Generating Station	*Energy Northwest*

The LRG worked on a lead plant concept with LaSalle County-1 acting as the lead plant. Subsequent to the issuance of the SER for LaSalle, NRC issued SERs for Zimmer, Shoreham, Susquehanna, and Fermi (refer to References 1 through 5).

Interface with staff from various branches of NRC identified issues for the specific branches. Often, the issues consisted of a question or questions previously developed by NRC. Whenever possible, a common position on the issue was developed which was applicable to all plants. In some cases, however, uniqueness of design or other variables precluded a common position.

Plant unique positions were then developed. This appendix is for Columbia Generating Station, but uses common positions when applicable.

The order of presentation for an issue is as follows: The issue is presented, then the details of the issue follow under the "Question" heading. The response is then given. The numbers in parentheses (e.g., 5.4.4, 6.2) reference the applicable sections in the FSAR. Applicable questions are referenced as appropriate since in many instances the issue was previously addressed in a Columbia Generating Station question response.

References:

1. *U.S. Nuclear Regulatory Commission (NRC), NUREG-0519, "Safety Evaluation Report by the Office of Nuclear Reactor Regulation in the Matter of Commonwealth Edison Company, LaSalle County Station, Units No. 1 and 2," Dockets No. 50-373/374.*

2. *NRC, NUREG-0528, Supplement No. 1, "SER by the Office of Nuclear Reactor Regulation, NRC, in the Matter of Cincinnati Gas and Electric Company, William H. Zimmer Nuclear Power Station, Unit 1," Docket No. 50-358.*

3. *NRC, Office of Nuclear Reactor Regulation, NUREG-0420, "SER Related to the Operations of Shoreham Nuclear Power Station, Unit No. 1, Docket No. 50-322, Long Island Lighting Company," April 1981.*

4. *NRC, Office of Nuclear Reactor Regulation, NUREG-0776, "SER Related Operation of Susquehanna Steam Electric Station, Units 1 and 2, Dockets No. 50-387 and 50-388, Pennsylvania Power and Light Company, Allegheny Electric Cooperative, Inc.," April 1981.*

5. *NRC, Office of Nuclear Reactor Regulation, NUREG-0798, "SER Related to the Operation of Enrico Fermi Atomic Power Plant, Unit No. 2, Docket No. 50-341, Detroit Edison Company et al.," July 1981.*

I.2 CONTAINMENT SYSTEMS BRANCH

ISSUE: CSB-1 STEAM BYPASS OF THE SUPPRESSION POOL (6.2.1.1)

Question:

The applicant approach to suppression pool bypass is not consistent with Branch Technical Position CSB 6-5. The applicant must commit to perform a low power surveillance leakage test of the containment at each refueling outage.

Response:

The response to above stated concern is provided in response to Question 031.070.

ISSUE: CSB-2 POOL DYNAMIC LOCA AND SRV LOADS

Question:

The staff has completed its review of the short-term program and developed acceptance criteria. We require that the applicant commit to our acceptance criteria or justify any exceptions taken.

Response:

NRC acceptance criteria as well as the supplements thereto are being reviewed and adhered to where possible. Where exceptions are taken, such as in the case of SRV load definition (see Reference 1), or chugging load definition (see Reference 2), these exceptions are being discussed and reviewed with the staff.

References:

1. *"SRV Loads - Improved Definition and Application Methodology for Mark II Containments" (submitted in August 1980).*

2. *"Chugging Loads - Revised Definition and Application Methodology for -Mark II Containments" (based on 4TCO Test Results) (submitted in July 1981).*

ISSUE: CSB-3 CONTAINMENT PURGE SYSTEM

Question:

A 2-inch vent line exists in the purge system to bleed off excess primary containment pressure during operation. We require the applicant to evaluate this 2-inch bypass purge system in light of the criteria of Branch Technical Position CSB 6-4.

Response:

The 2-inch bypass valves, used for pressure control during operation, are located in parallel with each purge system exhaust valve. These 2 inch-150# globe valves meet all the design requirements of the containment isolation system. They are designed to the same pressure/temperature ratings of the containment and purge valves and are designed to close within 4 sec against the 45 psig containment design pressure. All four bypass valves can be remotely operated from the control room, are designed to close an F, A, and Z isolation signals and are being operationally qualified against applicable seismic and hydrodynamic loads.

ISSUE: CSB-4 COMBUSTIBLE GAS CONTROL (6.2.5)

DELETED

ISSUE: CSB-5 CONTAINMENT LEAKAGE TESTING

DELETED

I.3 CORE PERFORMANCE BRANCH

ISSUE: CPB-1 LOAD ASSESSMENT OF FUEL ASSEMBLY COMPONENTS

Question:

The proposed addition of Appendix A to SRP 4.2 provides guidance for the analysis of fuel assembly components and acceptance criteria for fuel assembly response to externally applied forces. The applicant's fuel assembly capability should be assessed accordingly.

Response:

General Electric has completed development of fuel assembly loads modeling and results acceptance criteria both deemed to be in accordance with the requirements of Appendix A to SRP 4.2. The LRG lead plant (LaSalle) has been evaluated accordingly with acceptable results, which were forwarded to the NRC June 8, 1981. A similar analysis will be performed for Columbia Generating Station (CGS).

ISSUE: CPB-2 WATERSIDE CORROSION

Question:

The applicant has not addressed the potential for fuel corrosion failure similar to that which occurred at the Vermont Yankee plant.

Response:

As indicated in the General Electric presentation given to the NRC in December 1979, the failures appeared to be associated with a metallic incursion in the feedwater. This event has occurred only once in the BWR operating history and is unlikely to reoccur.

Subsequent to this event, General Electric provided an operation recommendation for corrosion product control which should preclude this type of event at CGS. Energy Northwest plans to employ those General Electric operating recommendations which have been proven to be effective at several operating BWR plants for maintaining water quality parameters at or below GE's water quality specification limits.

References:

1. *Letter from R. E. Engel (GE) to M. Tokar (NRC), MFN-172-80, "Corrosion Product Control", dated October 3, 1980.*

ISSUE: CPB-3 CHANNEL BOX WEAR

Question:

Provide more detailed and specific information on the Channel Box Wear concern as applicable to the CGS design.

Response:

General Electric observed wear on the water rods in 8 x 8R fuel assemblies in the fall of 1979. In the referenced letter it was concluded that the observed wear does not affect the functionality of the water rods in the bundle or plant safety.

Since the observed wear General Electric has modified the 8 x 8R water rod design. To improve the margin of reliability of the 8 x 8R fuel design, a modification to the water rod and spacer positioning/water rod has been developed. This modified design has shorter water rod and spacer positioning/water rod lower end plugs, and modified expansion springs on the upper end plugs. These changes have been shown to be effective by successful operation of the short shank 8 x 8 fuel design and from extensive flow-induced vibration testing. This modified water rod concept is being installed on new fuel, such as for CGS, as a prudent means of assuring increased margin of fuel reliability. Thus, the modification does not constitute an unreviewed safety question to CGS based on the criteria given in 10 CFR 50.59.

Reference:

1. Letter, J. S. Charnley (GE) to T. A. Ippolito (NRC), "Water Rod Lower End Plug Inspection Results," dated July 28, 1980.

ISSUE: CPB-4 FUEL CLADDING, SWELLING, AND RUPTURE MODELS

Question:

The applicant has not provided information to assure that for the fuel cladding in a LOCA "the degree of swelling and incidence of rupture are not underestimated" as required by Appendix K of 10 CFR 50.46. The procedures proposed in NUREG-0630 introduce additional conservatism and should be utilized to perform supplemental calculations to the current ECCS analyses.

Response:

General Electric recently transmitted supplemental calculations to the NRC, "Fuel Swell and Rupture Model - Experimental Data Review and Sensitivity Studies," May 15, 1981. This

document contains a discussion of the first stress and circumferential strain data applicable to the BWR, and presents results from the sensitivity studies performed comparing the NUREG-0630 models with the current GE models.

Hoop stress versus rupture temperature sensitivity studies were performed using a combination of the two curves (adjusted GE stress curve and NUREG-0630). These studies resulted in a change in PCT of ±10°F. Even though this PCT impact is small, GE proposes to review the current stress model to incorporate the adjusted curve. Implementation of the adjusted curve will be coincidental with implementation of the complete LOCA model improvement package. Also, the document shows that NUREG-0630 perforation strain versus temperature curve is not applicable to BWR fuel and that substitution of a bounding NUREG-0630 curve into the current GE ECCS analysis has negligible effect on the peak clad temperature (PCT). Based on this, it is maintained that the current GE strain model is valid for the BWR and should continue to be used for ECCS calculations at CGS.

Reference:

1. Letter, R. H. Buchholz (GE) to L. S. Rubenstein (NRC), "General Electric Fuel Clad Swelling and Rupture Model," dated May 15, 1981.

ISSUE: CPB-5 FISSION GAS RELEASE

Question:

Provide more detailed and specific information on the Fission Gas Release concern as applicable to the CGS design.

Response:

The effects of high burnups and subsequent fission gas release on fuel thermal-mechanical design analyses was addressed in the proprietary General Electric presentation to the NRC on Extended Burnups, March 24, 1981. Burnups to 50 GWd/MT are considered in the stress analyses documented in NEDE-24011-PA. This analysis is applicable to CGS fuel.

ISSUE: CPB-6 STABILITY ANALYSIS

Question:

Please refer to NRC Question 221.009 for this question.

Response:

Please refer to the response to NRC Question 221.009.

ISSUE: CPB-7 CHANNEL BOX DEFLECTION

Question:

The applicant has not referenced General Electric Licensing Topical Report NEDE-21354-P which describes the fuel channel design. Of specific concern is the commitment to control rod driveline friction testing recommended in Section 4.4.2 of NEDE-21354-P.

Response:

To resolve the channel box deflection issue, Energy Northwest has initiated a channel management program for CGS. The elements of this program include:

a. Compiling complete operating history records for each channel. Data to be collected include channel location, orientation of welded sides, exposure, and control history.

b. Compiling complete analytical history records for each channel including fast fluence (>1 MeV) , and flux gradient history.

c. Measurement of post-operation channel box deflection.

Energy Northwest is planning to measure channel box deflection after each refueling outage for selected channels which are discharged to the spent fuel pool. The reuse of discharged channels will be determined based upon these measurements as compared to predetermined criteria. Other items which will be addressed in this program include development of channel manufacturing history data and analytical, predictive capability.

The Channel Management Program has already resulted in some potential improvement in channel operation. Data from Commonwealth Edison measurements which recently became available indicate that major channel bow may be a strong function of channel manufacturing history rather than location of the channel within the core. Their data indicate that prime candidates for channel bow are manufactured from two pieces of stock material not from the same original material batch. Also, Commonwealth Edison channels which experienced major bow, in many cases, were never on the core periphery.

Based on this information, Energy Northwest has identified which of the CGS channels are manufactured from mismatched halves (75 out of 764) and we have set up special plans to

manage the use of these channels to minimize potential channel bow. These measures include taking advantage of core locations which are not adjacent to control blades and, in addition, identification of locations of minimal exposure and fast flux tilt.

In addition to the above channel management program, Energy Northwest is proposing to take a number of operational actions to monitor channel distortion in the core. Prior to startup after each reload, scram time testing and rod notch testing will be performed. For rods which fail the above test, the pressure test described in NEDE-21534-P (4.4.2) will then be performed.

I.4 INSTRUMENTATION AND CONTROL SYSTEMS BRANCH

ISSUE: ICSB-1 PHYSICAL SEPARATION AND ELECTRICAL ISOLATION (7.1.4, 7.2.3, and 7.6.3)

Question:

In the applicant's design, Class 1E instrumentation do not adhere to adequate separation criteria, have not been qualified, and do not adhere to separation of Class 1E to non-Class 1E instrumentation.

Response:

Columbia Generating Station (CGS) Class 1E instrumentation has been reevaluation to the requirements NUREG-0588, Category II, as described in the Equipment Qualification Report referenced in 3.11. Class 1E instrumentation is adequately separated as described in the response to Question 031.100 and as additionally agreed to in CGS docket letter GO2-81-146, dated June 18, 1981.

ISSUE: ICSB-2 ANTICIPATED TRANSIENT WITHOUT SCRAM (ATWS)

Question:

We require that the applicant agrees to implement plant modifications on a scheduled basis in conformance with the Commission's final resolution of ATWS. In the event that LaSalle starts operation before necessary plant modifications are implemented, we require some interim actions be taken by LaSalle in order to reduce, further, the risk from ATWS events.

The applicant will be required to:

a. Develop emergency procedures to train operators to recognize an ATWS event, including consideration of scram indicators, rod position indicators, flux monitors, vessel level and pressure indicators, relief valve and isolation valve indicators, and containment temperature, pressure, and radiation indicators.

b. Train operators to take action in the event of an ATWS including consideration of immediately manual scramming the reactor by using the manual scram buttons followed by changing rod scram switches to the scram position, stripping the feeder breakers on the reactor protection system power distribution buses, opening the scram discharge volume drain valve, prompt actuation of the

standby liquid control system, and prompt placement of the RHR in the pool cooling mode to reduce the severity of the containment conditions.

Response:

See the response to RSB-22.

ISSUE: ICSB-3 TEST TECHNIQUES (7.1.4)

Question:

In order to perform routine surveillance testing, it is necessary for the applicant to pull fuses. We consider that this design does not satisfy the requirements of IEEE Standard 279-1971, Paragraphs 4.11 and 4.20.

Response:

The responses to Questions 031.039 and 031.061 address this issue. Part (b) of the response to Question 031.039 is repeated below:

> *"In no instance will it be necessary during testing… to either lift leads or remove fuses."*

ISSUE: ICSB-4 SAFETY SYSTEM SETPOINTS (7.1.4)

Question:

The range of Class 1E system sensors may be exceeded in the worst case combination of setpoint and accuracy.

Response:

a. All calculated setpoints (taking into account drift) will be within sensor range and will be in accord with Technical Specification Limits.

b. Certain setpoints are dependent upon actual plant location or operation (i.e., background radiation) and can only be determined at a later date. If an incompatibility exists with regard to sensor range the instrument will be replaced. This position applies for all instruments where conflicts are detected.

ISSUE: ICSB-5 DRAWINGS

Question:

The one line drawings and schematics contradict the functional control drawings and system description which are provided in the FSAR. Furthermore, contact utilization charts contradict the actual schematics.

Response:

The contradiction between the drawings and the system descriptions has been eliminated as the result of a major effort spent in rewriting Chapter 7 with this concern in mind. With regard to inconsistencies between the functional control diagrams and schematics, all FSAR drawings and those listed in Chapter 1.7 are updated and distributed every 6 months.

ISSUE: ICSB-6 RCIC CLASSIFICATION

Question:

Refer to Question 031.015 and LRG Issue RSB-6.

Response:

Refer to responses to Question 031.015 and LRG Issue RSB-6.

ISSUE: ICSB-7 SAFETY-RELATED DISPLAY (7.5)

Question:

The design of the safe shutdown indication does not satisfy the requirements of IEEE Standard 279-1971, Paragraph 4.10.

Response:

CGS safety-related display instrumentation will be designed to comply with the requirements of Regulatory Guide 1.97, Revision 2. Section 7.5 has been amended to discuss the degree of conformance for CGS for each indication applicable as described in Regulatory Guide 1.97 and IEEE Standard 279-1971.

ISSUE: ICSB-8 ROD BLOCK MONITOR
(7.6)

Question:

The applicant does not agree that the rod block monitor is a protection system.

Response:

The NRC has conducted an extensive review of the RMCS including refueling interlocks RBM, RWM, RSCS on various dockets. Plants with open items having similar designs will be conformed to the Zimmer design (i.e., the resolution will be reviewed and resolution bases if applicable will be incorporated).

The Zimmer design review has been completed and the issue resolved. This closure basis will be relied upon. CGS system is similar to the design proposed for the Zimmer plant as delineated below:

a. The four flow monitors are interconnected by armored cable and shield cables and there are open spaces around the cables which penetrate fire barriers between redundant channels.

b. Both rod block monitor channels are connected by data buses which are enclosed in a metal shield and run along the top of the cabinet.

c. The wiring of the rod block monitor bypass switch satisfies the CGS separation criteria.

d. The rod block monitor is a modified design and contains multiplexing circuitry which interfaces with the new reactor manual control system.

Items a, b, and c have been verified at CGS site as to their existence. The NRC met with General Electric on Item d. and the staff has approved the current design and transient analysis with the addition of periodic technical specification testing to assure system operability.[*] CGS will include a surveillance requirement in the Technical Specification for the rod block monitor.

---

[*] *A GE/NRC generic meeting was held in Bethesda on January 22, 1981 to discuss the new reactor manual control system utilized on most NTOL plants. The NRC has been concerned for many years about the appropriateness of utilizing the RBM (not fully safety grade) in transient mitigation.*

ISSUE: ICSB-9 MSIV LEAKAGE CONTROL SYSTEM

Question:

We identified a single failure to the MSIV leakage control system which could lead to possible failure of the system during testing or operation.

Response:

Please see the revised response to Question 031.076.

I.5 MATERIALS ENGINEERING BRANCH

ISSUE: MTEB-1 PRESERVICE AND INSERVICE INSPECTION OF CLASS 1, 2, AND 3 COMPONENTS PER 10 CFR 50.55a(g)

Question:

Preservice and inservice inspection of Class 1, 2, and 3 components have not been submitted.

Response:

The response to the above stated concern is provided in the response to Question 121.010.

ISSUE: MTEB-2 EXEMPTIONS FROM APPENDIX G AND H TO 10 CFR 50
MTEB-3 (5.1.4) (5.3.2) (5.3.3)

Question:

The Columbia Generating Station (CGS) reactor vessel does not meet the specific requirements of Appendix G and H to 10 CFR 50. Identify and justify your exemptions.

Response:

CGS, as a member of the Licensing Review Group (LRG), has submitted information of fracture toughness and surveillance program requirements to show compliance with Appendix G and H to 10 CFR 50. This submittal (Reference 1) was similar to that which has been approved by the NRC for the preceding LRG members (LaSalle County, Susquehanna, Shoreham, Zimmer, and Fermi-2).

Reference:

1. *Letter GO2-81-532, G. D. Bouchey to A. Schwencer, "Appendix G and H Information, Responses to Materials Engineering Branch - Component Integrity Section," dated December 18, 1981.*

ISSUE: MTEB-4 REACTOR TESTING AND COOLDOWN LIMITS (5.3)

Question:

Insufficient information has been submitted for us to assess that the methods used to provide stress intensity values, are equivalent to those obtained from Appendix G of ASME Code; clarification and justification of the methods used to construct the operating pressure temperature limits should be provided.

Response:

CGS has provided information to show compliance with the methods of Appendix G of Section III of the ASME Boiler and Pressure Code (Summer 1972 Addenda). Compliance with Appendix G for this vessel is to provide operating limitations on pressure and temperature based on fracture toughness. These operating limits assure that a margin of safety against a nonductile failure of this vessel is the same as that for a vessel built to the Summer 1972 Addenda.

The specific temperature limits for operation when the core is critical are based on an approved modification to 10 CFR 50, Appendix G, Paragraph IV.A.2.c. The approved modification and justification for it is given in GE Licensing Topical Report NEDO-21778-A (Reference 1).

See Reference 1 to MEB-2 and MEB-3.

Reference:

1. *Letter to Dr. G. G. Sherwood (GE) from Olan V. Parr (NRC), "Review of General Electric Topical Report, Transient Pressure Rises Affecting Fracture Toughness Requirements for Boiling Water Reactors," November 13, 1978 (see GE Transmittal T-1727).*

ISSUE: MTEB-5 GENERAL DESIGN CRITERION 51

Question:

The applicant must demonstrate that the primary containment pressure boundary at CGS meets the requirements of General Design Criterion 51 of 10 CFR 50.

Response:

GDC-51 requires that under operating, maintenance, testing, and postulated accident conditions (1) the ferritic materials of the containment pressure boundary behave in a non-brittle manner and (2) the probability of rapidly propagating fracture is minimized.

The CGS containment system includes a ferritic steel primary containment vessel and head enclosed by a reinforced concrete shield structure. The ferritic materials of the containment pressure boundary that were considered in the evaluation for compliance to GDC-51 are those that have been applied in the fabrication of the containment vessel and head, equipment hatch, personnel lock, and penetrations and components of the fluid system including valves required to isolate the system. These components are the parts of the containment system that are not backed by concrete and must sustain loads during the performance of the containment function under the conditions cited by GDC-51.

CGS containment pressure boundary is comprised of ASME Code Class I, Class 2, and MC components. Based upon the review performed by the NRC, it was determined that the fracture toughness requirements in ASME Code Editions and Addenda typical of those used in the design of the CGS containment may not ensure compliance with GDC-51 for all areas of the containment pressure boundary. The basis for this decision was that the fracture toughness criteria that had been applied in construction differ in Code classifications and Code Edition and Addenda. Therefore, the Class I, Class 2, and Class MC components of the CGS containment pressure boundary were reviewed according to the fracture toughness requirements of the Summer 1977 Addenda of Section III for Class 2 components and fracture toughness data presented in NUREG-0577, "Potential for Low Fracture Toughness and Lamellar Tearing of PWR Steam Generator and Reactor Coolant Pump Supports."

Based on review of the available fracture toughness data and material fabrication histories, and the use of correlations between metallurgical characteristics and material fracture toughness, it was concluded that the ferritic materials in the CGS containment pressure boundary meet the fracture toughness requirements that are specified for Class 2 components by the 1977 Addenda of Section III of the ASME Code. Compliance with these Code requirements provide reasonable assurance that the CGS reactor containment pressure boundary materials will behave in a non-brittle manner, that the probability of rapidly propagating fracture will be minimized, and that the requirements of GDC-51 are satisfied.

I.6 MECHANICAL ENGINEERING BRANCH

ISSUE: MEB-1 ASYMMETRICAL LOCA AND SSE AND ANNULUS PRESSURIZATION LOADS ON REACTOR VESSEL INTERNALS AND SUPPORTS (3.9.2)

Question:

Document your reevaluation of the safety-related systems and components based upon the load combinations, response combination methodology, and acceptance criteria required by us as presented at our meeting of December 12, 1978. (Reference letter dated September 18, 1978.)

Response:

This issue was discussed at the Mechanical Engineering Branch (MEB) Safety Evaluation Report (SER) meeting held September 29 through October 1, 1981, for Columbia Generating Station (CGS). Load combinations and acceptance criteria are provided in the responses to the MEB SER questions 23 and 25, presented at that meeting (see Table MEB-1-1). Results of the reevaluation will be provided in the New Loads update of 3.9, to be provided in a future amendment.

Table MEB-1-1

Load Combination and Acceptance Criteria for ASME Code Class 1, 2, and 3 NSSS Piping and Equipment

Load Combination	*Design Basis*	*Evaluation Basis*	*(Service Level)*
N + SRV(ALL)	*Upset*	*Upset*	*(B)*
N + OBE	*Upset*	*Upset*	*(B)*
N + OBE + SRV(ALL)	*Emergency*	*Upset*	*(B)*
N + SSE + SRV(ALL)	*Faulted*	*Faulted**	*(D)*
N + SBA + SRV	*Emergency*	*Emergency**	*(C)*
N + IBA + SRV	*Faulted*	*Faulted**	*(D)*
N + SBA + SRV(ADS)	*Emergency*	*Emergency**	*(C)*
N + SBA + OBE + SRV(ADS)	*Faulted*	*Faulted**	*(D)*
N + IBA + OBE + SRV(ADS)	*Faulted*	*Faulted**	*(D)*
N + SBA/IBA + SSE + SRV(ADS)	*Faulted*	*Faulted**	*(D)*
***N + LOCA + SSE*	*Faulted*	*Faulted**	*(D)*

LOAD DEFINITION LEGEND

Normal (N) - *Normal and/or abnormal loads depending on acceptance criteria.*

OBE - *Operational basis earthquake loads.*

SSE - *Safe shutdown earthquake loads.*

SRV - *Safety/relief valve discharge induced loads from two adjacent valves (one valve actuated when adjacent valve is cycling).*

SRVALL - *The loads induced by actuation of all safety/relief valves which activate within milliseconds of each other (e.g., turbine trip operational transient).*

Table MEB-1-1 (Continued)

SRV_{ADS} - The loads induced by the actuation of safety/relief valves associated with automatic depressurization system which activate within milliseconds of each other during the postulated small or intermediate size pipe rupture.

LOCA - The loss-of-coolant accident associated with the postulated pipe rupture of large pipes (e.g., main steam, feedwater, recirculation piping).

$LOCA_1$ - Pool swell drag/fallout loads on piping and components located between the main vent discharge outlet and the suppression pool water upper surface.

$LOCA_2$ - Pool swell impact loads on piping and components located above the suppression pool water upper surface.

$LOCA_3$ - Oscillating pressure induced loads on submerged piping and components during condensation oscillations.

$LOCA_4$ - Building motion induced loads from chugging.

$LOCA_5$ - Building motion induced loads from main vent air clearing.

$LOCA_6$ - Vertical and horizontal loads on main vent piping.

$LOCA_7$ - Annulus pressurization loads.

SBA - The abnormal transients associated with a small break accident.

IBA - The abnormal transients associated with an intermediate break accident.

* *All ASME Code Class 1, 2, and 3 piping systems which are required to function for safe shutdown under the postulated events shall meet the requirements of NRC's "Interim Technical Position Function Capability of Passive Components" - by MEB.*

** *The most limiting case combination among $LOCA_1$ through $LOCA_7$.*

ISSUE: MEB-2 PREOPERATIONAL VIBRATION ASSURANCE PROGRAM (3.9.2, 3.9.5)

Question:

Additional information is required concerning the basis for the allowable vibration amplitude derived and clarification of the use of twice this allowable is acceptable.

Response:

This item has been closed by MEB prior to LRG review. It is not documented in lead plant or subsequent plant SERs. For additional information see responses to Questions 110.022, 110.023, and 110.024.

ISSUE: MEB-3 DYNAMIC RESPONSE COMBINATION USING THE SRSS TECHNIQUE

Question:

We are studying the problem of utilizing the square-root-of-the-sum-of-the-squares (SRSS) for determining responses other than LOCA and SSE as you have used. By not utilizing the absolute sum method, the review may be extended if we do not agree that the SRSS methodology is applicable.

Response:

The response to this issue was provided during the Mechanical Engineering Branch meeting for CGS, September 29 through October 1, 1981. (See Attachment 1.)

ATTACHMENT 1

Question No. 26
(3.9.3.1)

The methods of combining responses to all of the loads requested in (a) above is required. Our position in this issue for Mark II plants is outlined in NUREG-0484, Revision 1, "Methodology for Combining Dynamic Responses". However, since the primary containment for the CGS plant is a free-standing steel pressure vessel and the plant is in a higher seismic zone, the staff will require that the criteria in Section 4 of NUREG-0484, Revision 1, "Criteria for Combination of Dynamic Responses Other Than Those of SSE and LOCA," be satisfied if the square-root-of-the-sum-of-the-squares method of combining these responses is used. (Reference Regulatory Position E (2) in the enclosure to a letter from J. R. Miller, NRC, to Dr. G. G. Sherwood, GE, "Review of General Electric Topical Report NEDE-24010-P," dated June 19, 1980.) The conclusions of NUREG-0484, Revision 1, are based on the studies performed by GE in NEDE-24010-P and BNL in NUREG/CR-1330. The applicant must demonstrate that an SRSS combination of dynamic responses achieves the 84% nonexceedance probability level because of the difference in containment and seismic level which were not included in the earlier studies.

Response:

When a seismic response from a high seismic input, like that from Hanford, is combined with another dynamic response (e.g., SRV discharge loads), depending on the relative magnitudes of the two responses being combined, the shape of the cumulative distribution function (CDF) of the combined response will change. If the maximum magnitude of one of the responses is very large compared to the other response being combined, the CDF curve will almost be vertical and it is immaterial if these two responses are combined using the SRSS or the Absolute Sum (ABS) rule. However, if the maximum magnitudes of the two responses are about equal, use of SRSS vs. ABS rule to combine the responses will cause significant difference in the combined response. In addition, in this case, the CDF curve will be more like S-shaped with the non-exceedance probability (NEP) of SRSS being close to 84%. In the generic Mark II study, examples from both such cases were considered with more examples from the case with responses of comparable magnitudes. This study showed that all these Mark II cases meet the requirements of NUREG-0484. Hence the GE Topical Report NEDE-24010-P, "Technical Bases for the Use of SRSS Method for Combining Dynamic Loads for Mark II Plants," is also applicable to CGS with high seismic input.

The impact of the free-standing steel primary containment is discussed in the areas as follows:

a. Vessel and Internals

Vessel and internals are not attached to and not affected by the steel containment.

b. Piping Systems and Floor Mounted Equipment

The dynamic input to these components at their containment support locations may be affected by the steel containment response to the dynamic loads under consideration and hence, may be different from that obtained from concrete containment. However, the frequencies contributing to the responses of major structures and components in both types of plants will not be significantly different but will fall into the same general range.

The structural frequencies will only determine the magnitude of amplification or attenuation of the response. For multi-frequency random-type dynamic loads, the components of input loads whose frequencies coincide with the structural natural frequencies will be amplified and these components will dominate the response. Although the predominant response of a particular structural component may vary somewhat in frequency between the concrete and steel containment configuration, the variances are expected to be small for the range of frequencies of interest for major structures because of the similarities in systems, types of structural configurations, construction materials, and massiveness of buildings. Therefore, key characteristics of the responses (duration of strong response motion and number of peaks) are primarily determined by the input component loads to the structure, and because of the similarity of the dynamic nature of the input loads due to earthquake, SRV, and LOCA for both types of containment, their structural responses will have similar dynamic characteristics. Hence, the response of the mechanical components and piping systems supported from the two types of containments will also be similar. Hence, the use of SRSS combinations for combining the dynamic responses for the CGS application will be demonstrated to meet the 84% non-exceedance probability level.

ISSUE: MEB-4 OBE PLUS SRV FATIGUE ANALYSIS

Question:

Clarify your consideration of the cyclic loadings due to the operating basis earthquake (OBE) and safety/relief valve actuation in your NSSS fatigue analysis.

Response:

For the NSSS piping, 50 peak OBE cycles are used. For other NSSS equipment and components, a generic study serves as the basis for 10 peak OBE cycles. As shown in Reference 1, 10 peak OBE cycles can envelope the cumulative fatigue damage of hundreds of less severe earthquake cycles. Section 3.9 of the FSAR was revised to reflect this position.

The methodologies used to evaluate the fatigue effects due to combined SRV and OBE loads are documented in Reference 2. In the fatigue analysis of NSSS equipment, piping, reactor pressure vessel, and RPV internal components, the actual calculated loads due to OBE and SRV are combined to show compliance with upset limits of fatigue.

References:

1. *Letter from R. Artigas to R. Bosnak, "Number of OBE Fatigue Cycles in the BWR NSSS Design," September 17, 1981.*

2. *Letter from R. B. Johnson to R. Bosnak, "GE Position on Fatigue Analysis," June 29, 1981.*

ISSUE: MEB-5 STRESS CORROSION CRACKING OF STAINLESS STEEL COMPONENTS - DESIGN MODIFICATION

Question:

You are requested to review all ASME Code Class 1, 2, and 3 pressure boundary piping, safe ends and fitting material, including weld metal at your facility to determine if the material selection, processing guidelines, or inspection requirements set forth in NUREG-0313, Revision 1, "Technical Report on Material Selection and Processing Guidelines for BWR Coolant Pressure Boundary Piping," are satisfied.

Response:

The response to the above stated concern is provided in the response to NUREG-0313, Revision 1, which was submitted to the NRC September 2, 1981, via GO2-81-268,

G. D. Bouchey to A. Schwencer, "Hardship Exemption Request for Implementation of NUREG-0313, Revision 1."

ISSUE: MEB-6 PUMP AND VALVE OPERABILITY ASSURANCE PROGRAM (3.9.3.2)

Question:

Additional information has been requested regarding your analytical and testing methods for your pump and valve operability assurance program.

Response:

a. Pumps

In addition to the tests called for in the FSAR, active safety-related pumps have been analyzed to find the natural frequencies of the pump. When these frequencies were above the ZPA of the seismic floor response spectra, static analyses were performed on the pumps. When the analyses established that the resultant stresses in the pumps were below allowables and the deflections under these loads were less than clearances between moving parts, operability was established. No pumps have been identified which need to have additional testing or analysis to establish operability.

b. Valves

In addition to the tests mentioned in the response to Question 110.032, seismic analyses have been and are being performed on the active safety-related valves which were not prototypically tested. The tests, along with the analysis showing clearance at critical points, demonstrate operability under normal plus SSE loading.

Where the analyses do not show clearances, the valves are being retested as part of the requalification program. If the test and/or analyses did not include hydrodynamic loads where applicable, the valves are being retested or reanalyzed using the proper loading as part of the requalification program.

Where valve accelerations resulting from piping analyses are not yet known, the peak acceleration for frequencies over 8 hz on the 0.005 damping floor response spectra is used as input acceleration for valve analysis and testing. The acceptability of this criteria are being established by comparing piping analysis accelerations to these peaks. The test reports, analyses, and requalification

plans were made available and audited by the NRC-SQRT (Seismic Qualification Review Team) and NRC-PVORT (Pump and Valve Operability Review Team) during November 1982.

ISSUE: MEB-7 BOLTED CONNECTIONS FOR SUPPORTS (3.9.3)

Question:

You have not provided the allowable limits for buckling for the reactor vessel support skirt subjected to faulted conditions. In addition, we requested information concerning the design of support bolts and bolted connections.

Response:

The responses to Questions 24 (Attachment 1) and 42 (Attachment 2) from the CGS draft SER respond to this issue.

ATTACHMENT 1

Question No. 24
(3.9.3.1)

Several references are made in Table 3.9.2(a) through 3.9.2(ac) to allowable stresses for bolting. Specifically, what loading combinations and allowable stress limits are used for bolting for (a) equipment anchorage, (b) component supports, and (c) flange connections. Where are these limits defined?

Response:

a. Floor Mounted Equipment

1. Equipment Anchorage Bolting

The floor anchored mechanical equipment (pumps, heat exchangers, and RCIC turbine) in GE's scope of supply are mounted on a concrete floor or a steel structure. The design of concrete anchor bolts for the equipment mounted on concrete floor, and the responsibility to prescribe and meet the necessary codes and stress limits are in the AE's scope of supply. The design of attachment bolts for the equipment mounted on steel structure, and the responsibility to prescribe and meet the necessary codes and stress limits are also in the AE's scope of supply. GE works with the interface limit of 10,000 psi in tension or shear for the only purpose of sizing bolt holes in the equipment base, based on the required nominal size and number of bolts for maximum loads.

2. Component Support Bolting

(a) RWCU Pump

The support bolting of this non-safety essential pump is designed for the effects of pipe load and SSE load to the requirements of the ASME code, Section III, Appendix XVII. The stress limits of 0.41Sy for tension and 0.15Sy for shear are used.

(b) RCIC Turbine

The pump-to-base plate bolting is designed as follows:

(1) Normal Plus Upset

a) Primary membrane:

1.0S

b) Primary membrane plus bending:

1.5S,where S is the allowable stress limit per the ASME Code Section III, Appendix I, Table 1-7.3.

(2) Emergency or Faulted

Stresses shall be less than 1.2 times the allowable limits for "Normal plus Upset" given above.

(c) Flanged Connection Bolting

There are no flange type connections in component supports.

b. Piping Supports and Pipe Mounted Equipment (Valves and Pump) Supports

The supports are hanger and snubber type (including clamps) linear standard components as defined by the ASME Code Section III, Subsection NF. The bolts used in these supports meet criteria of NF-3280 for Service Levels A and B and NF-3230 for Service Levels C and D. (Note: NF-3280 is applicable to bolting for Service Levels A and B. NF-3230 is applicable to linear supports; it refers to Appendix VII which is applicable to bolting for Service Levels C and D.)

ATTACHMENT 2

Question No. 42
(3.9.3.4)

The applicant's response to NRC Question 110.029 is not completely acceptable. Paragraph 3.9.3.4 implies that the reactor vessel support skirt was designed to an allowable compressive load of 0.8 material yield stress. It is not clear how the applicant's design would meet the staff's acceptable allowable load of two-thirds of critical buckling load. In addition, the applicant has assumed the critical buckling stress as the material yield stress at temperature. Provide basis for this assumption.

Response:

This issue was addressed and approved by the NRC on the Susquehanna DSER docket.

Refer to the response to Susquehanna DSER 3.9.3-6. A similar response is provided as follows:

Per GE design specification, the permissible compressive load on the reactor vessel support skirt cylinder (plate and shell type component support) was limited to 90% of the load which produces yield stress, divided by the safety factor for the condition being evaluated. The effects of fabrication and operational eccentricity was included. The safety factor for faulted conditions was 1.125.

An analysis of reactor pressure vessel support skirt buckling for faulted conditions shows that the support skirt has the capability to meet ASME Code Section III, Paragraph F-1370(c) faulted condition limits of 0.67 times the critical buckling strength of the support at temperature assuming that the critical buckling stress limit corresponds to the material yield stress at temperature. The faulted condition analyzed included the compressive loads due to the design basis maximum earthquake, the overturning moments and shears due to the jet reaction load resulting from a severed pipe, and the compressive effects on the support skirt due to the thermal and pressure expansion of the reactor vessel. The expected maximum earthquake loads for the Hanford 2 reactor vessel support skirt are less than 50% of the maximum design basis loads used in the buckling analysis described; therefore, the expected faulted loads are well below the critical buckling limits of Paragraph F-1370(c) for this reactor vessel support skirt. The expected earthquake loads for this reactor were determined using the seismic dynamic analysis methods described in Section 3.7.

Based on currently defined faulted condition loads including annulus pressurization and SSE loads, the maximum compressive stress in the support skirt for axial and bending loads is less than the upset condition allowables determined by the methods of NB-3133.6 of the ASME Code. This assures satisfactory margin against buckling for the faulted condition loads.

ISSUE: MEB-8 PUMP AND VALVE INSERVICE TEST PER 10 CFR 50.55a(g)

Question:

You have not submitted your proposed program for the inservice testing of pumps and valves as required by 10 CFR 50.55a(g).

Response:

The CGS pump and valve inservice test program plant was submitted to the NRC via letter GO2-81-322, G. D. Bouchey to A. Schwencer, "Pump and Valve Test Program Plan," dated October 1, 1981.

ISSUE: MEB-9 REVIEW OF IN SITU TEST PROGRAM OF THE SAFETY/RELIEF VALVE

Question:

No specific question identified for this issue.

Response:

Extensive in-plant SRV actuation test programs have been implemented at Caorso (Italy) and Tokai-2 (Japan), two BWR plants with Mark II containment configuration and equipped with x-quenchers of a design essentially identical to those used in CGS. Test results from the above programs, which are available to the NRC, have been used to develop an improved SRV discharge load definition for specific application to CGS (see Report, "SRV Loads, Improved Definition for Mark II Containments, Proprietary Section") and to confirm that the difference between bulk pool temperature and local pool temperature at the quencher discharge is within the value assumed in the suppression pool temperature transient analysis for CGS. As stated in Reference 3, implementation of additional SRV tests to measure or confirm the adequacy of the SRV load definition is unnecessary, but an in-plant test to measure local to bulk pool temperature difference will be performed.

References:

1. *Letter GO2-80-172, D. L. Renberger to B. J. Youngblood, "Submittal of SRV Report," dated August 8, 1980.*

2. *Letter, J. J. Verderber to B. J. Youngblood, "Submittal of Proprietary SRV Report," dated August 27, 1980.*

3. Letter GO2-81-524, G. D. Bouchey to A. Schwencer, "Suppression Pool Temperature Transient Analysis and In-Plant SRV Test," dated December 15, 1981.

ISSUE: MEB-10 CRACKING OF JET PUMP HOLD-DOWN BEAMS

Question:

Additional information is required concerning the actions being taken by the licensee to preclude cracking of the jet pump hold-down beams.

Response:

As discussed in response to IE Bulletin 80-07, CGS will comply with the GE generic resolution. Since the jet pump hold-down beams have already been installed, CGS will reduce the beam preload from 30 kips to 25 kips which is expected to increase beam operating time to crack initiation at the 2.5% probability level to a range of 19 to 40 years. Also, during operation, periodic inspections will be conducted as part of our overall in-service inspection program. Inspection frequencies will be developed in the future based on lead plant inspection results and the results of future testing at General Electric. (See Reference 1.)

References:

1. Letter, G. D. Bouchey to R. L. Tedesco, GO2-80-279, "Cracking of BWR Jet Pump Hold Down Beams," dated December 4, 1980.

ISSUE: MEB-11 CONTROL ROD DRIVE RETURN LINE

Question:

We have not completed our review of GE Topical Report NEDE-21821-2A addressing reactor feedwater nozzle/sparger design modification for cracks nor have we completed GE's generic modification to the control rod drive return nozzle. This may require additional request for information.

Response:

Energy Northwest's response to NUREG-0619, "BWR Feedwater Nozzle and Control Rod Drive Line Nozzle Cracking," has been completed. The current status of our position on the CRD cracking problem is as follows:

a. CRD return line has been cut and capped as allowed by NUREG-0619, page 31.

b. CRD return line has been rerouted through redundant equalizing valves to the exhaust water header.

c. The control rod drive preoperational test will demonstrate that the system is fully operational and that all components including the hydraulic drive mechanisms, pumps, and flow control valves function properly. The CRD system will be configured with the modifications noted in the NRC concern.

d. In order to assure satisfactory system operation with the single failure of an equalizing valve, the proposed design modification will include the addition of two equalizing valves installed in a parallel configuration. The failure of either valve will not impair CRD operation for any foreseen operating or accident condition.

e. There will be no increased potential for carbon steel corrosion products to be deposited in the drives. All lines in the CGS hydraulic system after the drive water filters are made of stainless steel.

f. The NRC requested GE by letter of January 28, 1980, to recalculate the makeup flow capacity for the 251-inch BWR-5 without the CRD return line. This generic information has been provided by letter of May 2, 1980, from R. L. Gridley, GE, to D. G. Eisenhut, NRC, concurrently with this docketed response for LaSalle. The results indicate that the 251-inch BWR-5 CRD system without a return line (capped Nozzle 10) can achieve a vessel makeup flow in excess of its calculated boiloff rate of 180 gpm. This confirms the same boiloff rate as previously documented in a March 14, 1979, submittal from GE. Furthermore, since the CRD system is not designed to perform an ECCS function, the additional testing to demonstrate the required return flow capacity to the vessel is not warranted.

ISSUE: MEB-12 CONFIRMATORY PIPING ANALYSIS

Question:

This item is comprised of two issues:

a. The NRC requires piping system data for the purpose of running confirmatory stress calculations to assure compliance with IE Bulletin 79-14.b.

b. Documentation of the preoperational vibration test program for all ASME, Section III, Class 1, 2, and 3 high energy piping systems and all Seismic Category I portions of moderate and high energy piping systems.

Response:

a. A summary of CGS inspection program and the design control measures utilized to assure an adequate design for the Seismic Category I piping systems are contained in a letter from D. L. Renberger to R. H. Engelken," WPPSS Nuclear Project No. 2, IE Bulletin 79-14," dated September 7, 1979 (Reference 1). Presently, CGS has an established program to develop as-built drawings documenting the final configuration of the piping systems together with their supports. The preparation of the as-built drawings is currently underway and these as-built drawings will provide the basis for the final design assessment of the piping systems. However, in order for NRC to proceed with the confirmatory piping analysis and to verify the compliance of the design data with the as-built configuration, Reference 3 provided the necessary piping design data as requested in Reference 2.

b. The preoperational/startup piping vibration program includes all Class 1, 2, and 3 high energy piping systems inside Seismic Category I structures or those portions of high energy systems whose failures could adversely affect the functioning of safety-related structures, systems, or components. The program also includes all Seismic Category I portions of moderate energy piping systems outside containment.

All systems contained in the preoperational/startup vibration program, as documented in Section 14.2, are operated at rated flow and the piping system is either visually inspected or monitored for steady state vibration by remote readout transducers. If during this initial system operation visual observation indicated that piping vibration is significant, measurements are made with a hand-held vibrograph. The results will then be reviewed by the appropriate engineering group to determine the acceptability of the measured vibration values. For the main steam, recirculation, feedwater, RCIC, and SRV discharging piping, the measured vibration is compared against test acceptance criteria. The results are also reviewed by the responsible piping design organization to confirm proper system performance. Documentation of the test results and engineering evaluation performed on them becomes a part of the Startup Test Program files. A summary report is generated and would be available for NRC review following commercial operation.

References:

1. *Letter from D. L. Renberger to R. H. Engelken, "WPPSS Nuclear Project No. 2, IE Bulletin 79-14," dated September 7, 1979, GO2-79-156.*

2. *Letter from R. L. Tedesco to R. L. Ferguson, "Confirmatory Piping Analysis for WNP-2," dated June 22, 1981.*

3. *Letter G. D. Bouchey to L. J. Auge (Manager, Energy Technology Center), dated September 9, 1981, GO2-81-279.*

I.7 POWER SYSTEMS BRANCH

ISSUE: PSB-1 LOW OR DEGRADED GRID VOLTAGE

Question:

The electrical system does not meet our requirements for protection under low or degraded voltage conditions.

Response:

NRC requirements for protection under low or degraded voltage conditions are detailed in Question 040.036 which references revised 8.3.1.1.1 and 8.3.1.2.4.3.

ISSUE: PSB-2 TEST RESULTS FOR THE DIESEL GENERATORS (8.3.2)

Question:

Test results for the diesel generators to indicate margin have not been submitted.

Response:

PSB-2 identifies two margin tests to be accomplished during the preoperational testing of the diesels. The first, a "steady-state margin test," involves loading the unit in excess of the total design accident loads to demonstrate some margin over the total design requirements. The other test, a "start-load margin test," involves applying a step function load in excess of the largest motor to demonstrate the start-load capability of the set with some margin.

Preoperational testing of Columbia Generating Station (CGS) emergency diesels will include subjecting the diesels to 100% rated load as well as loading the units to their two-hour rating, both of which are larger than the combined design accident loads.

During the loss of power tests, occurring during the preoperational testing phase, a test will be made to demonstrate the start-load capability of the units over that which is required. This test involves loading the diesel generator to 100% design load and dropping the largest motor on the associated bus. This motor will then be restarted. This test demonstrates the diesel generator unit has the capability to start the largest motor on its respective bus while concurrently feeding the rest of the bus loads and still remain within the voltage and frequency requirements of Regulatory Guide 1.9.

The HPCS diesel generator will not be required to fulfill the requirements of Regulatory Guide 1.9, with respect to the voltage and frequency drop, during this particular test as clarified in 8.3.1.2.1.4. Preoperational test results will be available for NRC review during the normal inspection enforcement period.

ISSUE: PSB-3 CONTAINMENT ELECTRICAL PENETRATIONS

Question:

The reactor electrical penetrations do not conform to Regulatory Guide 1.63 and test results do not demonstrate that the electrical penetrations can maintain their integrity for maximum fault current.

Response:

NRC concerns regarding electrical penetration capability under maximum fault (short circuit) conditions are expressed in LaSalle FSAR Question 040.106. That question addresses the effect upon containment integrity of fault current i^2t, assuming failure of the circuit primary protective overcurrent device.

LaSalle's response took credit for the fusing properties of cable external to the penetration conductors to provide overcurrent protection backup to the primary overcurrent device. The response reflected a common Licensing Review Group (LRG) position.

The LaSalle SER rejects the LRG position, advising that credit cannot be given for assumed equipment failure (cable fusing). It mandates that fault current protection devices (circuit breakers and/or fuses) to backup the primary over-current protective devices be provided as required to limit fault current surges to levels less than those for which the penetrations are qualified.

NRC concerns in this area are addressed to CGS in Questions 040.031 and 040.035. These questions were not as explicit regarding the NRC concern as was the question addressed to LaSalle. The CGS response to Question 040.035 predated much of the NRC/LaSalle dialogue and requires revision.

The original response to Question 040.034 provided data indicating the capability of penetration primary overcurrent protective devices to clear faults before penetration i^2t capability is exceeded.

Additional analysis has been performed to determine the maximum i^2t available at electrical penetrations for the case of failure of the circuit primary protective devices to function, which requires the backup overcurrent protective device to clear the fault. Where the analysis

demonstrates that penetration i^2t capability is exceeded, a second overcurrent protective device has been added in series with the circuit primary overcurrent protective device.

The responses to Question 040.034 and 040.035 have been revised to reflect the results of this analysis.

ISSUE: PSB-4 ADEQUACY OF THE 120 V AC RPS POWER SUPPLY (8.3.1.1.6)

Question:

The applicant committed to the generic resolution, or to expedite their license, will commit to the surveillance requirements which were applied to Hatch-2.

Response:

Energy Northwest is committed to implement, prior to fuel loading, the RPS MG set design modification developed by General Electric for generic application. The FSAR has been revised to reflect the design modification.

ISSUE: PSB-5 THERMAL OVERLOAD MARGIN

Question:

We require the applicant to provide the detailed analysis and/or criteria which was used to select setpoints for the thermal overload protection devices for valve motors in safety systems and the details as to how these devices will be tested.

Response:

Motor thermal overloads for Class 1E motor-operated valves (MOVs) are chosen two sizes larger than those which would be required based upon normal full load running current. The resultant overload protection (approximately 140% of motor full load current) permits MOVs to operate for extended periods of time at moderate overloads; tripping occurs just prior to motor damage.

Class 1E motor control centers are located in environmentally controlled rooms such that overload ambient temperature variation is not a significant factor.

Initial testing of overload heaters serving safety-related MOVs is performed by Energy Northwest during the Test and Startup Program. This testing is accomplished by injecting a

test current through the overload device, thus, simulating an overcurrent of the motor operator and verifying that the device stops valve travel by deenergizing the motor starter and/or alarms at the appropriate alarm panel, as applicable. Acceptance criteria for these tests are derived by manufacturers' curves for the devices or applicable codes and standards where available.

Periodic surveillance testing of thermal overloads serving safety-related MOVs will be in accordance with the CGS technical specifications. A representative sample of at least 25% will be tested at least once per 18 months, such that all will be tested once per six years. The test itself will be essentially the same as that described above.

ISSUE: PSB-6 RELIABILITY OF DIESEL GENERATOR

Question:

No specific question identified for this issue.

Response:

The reliability of starting and accepting design load in the required time was fully demonstrated for the Div. 1 and Div. 2 D-Gs by the successful completion of the 300 Start Qualification Test performed on D-G Unit 1 in accordance with NRC BTP-EICSB-2 prior to shipment. The reliability of the HPCS D-G has been verified by a prototype test on an eventually identical unit. See Reference 4.

In response to other concerns on the reliability of all the D-G units, see the responses to, Questions 040.080 through 040.089.

The HPCS D-G (Div. 3) has been given preoperational tests to demonstrate the reliability of starting and accepting design load in the required time, and that the system has adequate margin in all respects, such as starting time, accelerating time, engine torque, and long-term carrying capability.

The 300 Start Qualification Test Report for D-G Unit 1 is available for the NRC's review at the plant site. See Reference 2.

The HPCS D-G (Div. 3) Site Preoperational Test Report is available to the NRC for review at the plant site. See Reference 3.

References:

1. NRC Branch Technical Position EICSB-2

2. Prototype 300 Start Qualification Test Report, B&R File No. 53-00-7014 and 53-00-7015.

3. HPCS D-G Acceptance Test, PT-7.2-A

4. GE Document No. NEDO-10905-3, Licensing Topical Report-High-Pressure Core Spray System Power Supply Unit.

ISSUE: PSB-7 PERIODIC DIESEL GENERATOR TESTING

Question:

Diesel generator testing once every 18 months is required by Regulatory Guide 1.108.

Response:

The Technical Specifications for CGS comply with Regulatory Guide 1.108 requirements for testing the diesel generators on 18-month intervals. In addition, a test has been included to verify that after an interruption of onsite power the loads are shed from the emergency buses and that subsequent loading of the onsite sources is through the load sequencer. See the response to Question 040.037.

I.8 REACTOR SYSTEMS BRANCH

ISSUE: RSB-1 INTERNALLY GENERATED MISSILES (3.5.1)

Question:

The applicant has not supplied the information to show that all safety-related systems and components within the containment, including the containment, are protected from missiles.

With regard to missiles sizes of concern, what is the valve size below which, if failure should occur in a high pressure system, damage to other components within the primary containment would not be significant? State criteria used to determine this size. Identify all valves in the primary containment larger than this size and identify the missile protection provided for each valve (either physical location or barrier).

Response

All safety-related systems and components at Columbia Generating Station (CGS) are protected from credible plant. A response identifying criteria and methodology and the final results for inside and outside containment in the third quarter of 1982 (letter no. GO2-82-672).

Valve parts are not postulated as credible missile sources if double retention features exist or bonnet bolting is shown to have high margins of safety. All valves in our plant were evaluated on this basis and it was concluded that valves are not credible missile sources.

ISSUE: RSB-2 CONTROL ROD SYSTEM (4.6.2)

Question:

As a result of eliminating the control rod drive system return line, we are reviewing generically with regard to the impact on control rod drive system performance. Consequently, we require the applicant to submit system performance data directly applicable to CGS and will require the applicant to conform to the conclusion of the generic study as applicable to CGS.

Response:

See the response to MEB-11.

See also the revised response to Question 211.019.

References:

1. *Letter, G. G. Sherwood (GE) to E. G. Case (NRC), "Control Rod Drive (CRD) Return Line Removal," dated January 27, 1978.*

2. *Letters, G. G. Sherwood (GE) to V. Stello (NRC) and R. J. Mattson (NRC), "Control Rod Drive (CRD) Return Line Removal," dated July 14, 1978.*

3. *Letters, G. G. Sherwood (GE) to V. Stello (NRC) and R. J. Mattson (NRC), "Control Rod Drive (CRD) Return Line Removal," dated February 22, 1979.*

ISSUE: RSB-3 SAFETY/RELIEF VALVES
(5.2.2 and 6.3.2)

Question:

Additional information is required both for qualification test and operating experience with the applicant's safety/relief valves.

Response:

The response to the above stated concern is provided in the revised response to Question 211.051. Also refer to response to Question 211.209.

ISSUE: RSB-4 TRIP OF RECIRCULATlON PUMPS TO MITIGATE ATWS
(5.2.2)

Question:

We require reperformance of the overpressure analysis to consider the effect of the ATWS RPT.

Response:

Section 5.2.2 was revised as part of the ODYN analysis which has been submitted to the NRC.

This section incorporates the confirmatory analysis of the overpressure protection report including the ATWS recirculation pump trip. Also see revised response 15.8 and response to Question 211.049.

ISSUE: RSB-5 DETECTION OF INTERSYSTEM LEAKAGE (5.2.5)

Question:

We requested that the applicant show how it intends to detect leakage from the reactor coolant systems into both the low pressure coolant injection (3 trains) and low pressure core spray systems as required by Regulatory Guide 1.45.

Response:

Intersystem leakage will be detected by pressure instrumentation with control room readout in accordance with Regulatory Guide 1.45. The response to CGS FSAR Question 211.009 provides information on this issue.

ISSUE: RSB-6 REACTOR CORE ISOLATION COOLING PUMP SUCTION

Question:

The applicant must supply further information to determine whether the RCIC pump suction has to be automatically switched from the condensate storage tank to the suppression pool in the event of a safe shutdown earthquake and concomitant failure of the condensate storage tank.

Response:

As stated in the response to Question 211.046, an automatic safety-grade switchover to a Seismic Category I supply (suppression pool) has been provided. A description of the automatic switchover has been provided in the response to Question 211.146.

ISSUE: RSB-7 SHUTDOWN UNINTENTIONALLY OF THE REACTOR CORE ISOLATION COOLING SYSTEM

Question:

Show how the design of the RCIC protection system prevents unintentional shutdown of the system, when the system is required, because of spurious ambient temperature signals from areas in and around the system (especially in the RCIC pump room)

Response:

See the revised response to Question 211.010.

ISSUE: RSB-8 RHR ALTERNATE SHUTDOWN DEMONSTRATION

Question:

The applicant must perform tests to show that flow through the safety/relief valves is adequate to provide the necessary fluid relief required consistent with the analyses reported in Section 15.2.9 of the FSAR.

Response:

Refer to the revised response to Question 211.025. Also, NUREG-O737, Item II D.1 is related to Issue RSB-8. A discussion on NUREG-O737 items is contained in Appendix B.

ISSUE: RSB-9 CATEGORIZATION OF VALVES WHICH ISOLATE RHR FROM REACTOR COOLANT SYSTEM (5.4.2)

Question:

We require that the valves which serve to isolate the residual heat removal system from the reactor coolant system be classified Category A/C in accordance with the provisions of Section XI of the ASME code.

Response:

Please refer to RSB-13.

ISSUE: RSB-10 AVAILABLE NET POSITIVE SUCTION HEAD

Question:

The applicant must verify that the suction lines in the suppression pool leading to the ECCS pumps are designed to preclude adverse vortex formation and air injection which could effect pumps performance.

Response:

All ECCS suction lines in the suppression pool have been designed with large diameter piping (24 inches) to reduce inlet velocity. In the worst conceivable case, where there is a leak from an ECCS pump suction line into the largest of the ECCS pump rooms, the water level in the suppression pool is calculated to equalize at elevation 455'-9". In the calculation, no credit is taken for makeup to the suppression pool nor for pumping water leaking into the affected room/ suppression pool. The RCIC pump suction is an 8-inch pipe. The submergence of the top edge of the suction piping with suppression pool water level at 455 ft-9 in. is as follows:

		Penetrations	Depth (C.L.)	Submergence
RHR Loop	"A"	(X-35)	447'-0"	7.8'
	"B"	(X-32)	447'-0"	7.8'
	"C"	(X-36)	447'-7"	7.2'
LPCS		(X-34)	447'-7"	7.2'
HPCS		(X-31)	438'-9"	16.0'
RCIC		(X-33)	452'-0"	3.4'

The minimum depth at which vortex formation at the suction inlets will be prevented is:

	Flow Rate (max)	Velocity	Submergence
RHR	8000 gpm	5.674 fps	2.41'
LPCS	7800 gpm	5.533 fps	2.35'
HPCS	7175 gpm	5.089 fps	2.16'
RCIC	600 gpm	3.295 fps	0.84'

The RCIC pump suction will have 2.5 ft of submergence. The inlet to each of the ECCS lines is at least 5 ft deeper than required to preclude vortexing, and therefore, vortex formation is not considered a problem.

See also the response to Question 211.062 for further information.

ISSUE: RSB-11 ASSURANCE OF FILLED ECCS LINE (6.3.2)

Question:

Instrumentation is not sufficiently sensitive to detect voids at the top of ECCS pipe lines. The applicant must provide adequate instrumentation to assure filled ECCS lines.

Response:

Filled ECCS lines are assured by:

a. *Jockey pump system on same division as system being filled,*
b. *Pressure switch on pump discharge with control room annunciation,*
c. *Technical Specification surveillance - upon high point vents to check for air.*

See also the response to Question 211.079 for additional information.

ISSUE: RSB-12 OPERABILITY OF ADS

Question:

Show that the air supply to the ADS is sufficient for the extended operating time required and is assured by reliability data that the ADS will function as required.

Response:

Safety-related backup to the CIA system is provided by redundant, independent nitrogen gas bottle banks. Upon loss of CIA, the system will be automatically isolated as the backup nitrogen supply is automatically fed into the system. The nitrogen bottle supply is sized for a 30-day supply to the seven ADS valves. The nitrogen supply can farther be backed up by a portable auxiliary nitrogen supply (if necessary) which can be connected outside the reactor building. Please refer to Section 9.3.1.2.2 and the responses to Questions 031.121 and 211.048.

ISSUE: RSB-13 LEAKAGE RATE TESTING OF VALVES USED TO ISOLATE REACTOR COOLANT SYSTEM (5.3.2)

DELETED

ISSUE: RSB-14 OPERABILITY OF ECCS PUMPS (6.3.2)

Question:

The applicant must provide assurance that the ECCS pumps can function for an extended time (maintenance free) under the most limiting post-LOCA conditions.

Response:

This issue has been closed on Zimmer, Shoreham, and LaSalle dockets on the basis of information presented in response to NRC questions. Similar information has been provided on the rest of the dockets. The response to CGS Question 211.072 has been revised to include the latest information available.

NUREG-0737 Task II.B.2 is related to the issue discussed above and is addressed in Appendix B of the FSAR. The shielding evaluation referred to in Appendix B will show that the ECCS pumps will operate for the accident duration (assumed to be six months), using the source terms from II.B.2.

ISSUE: RSB-15 ADDITIONAL LOCA BREAK SPECTRUM (6.3)

Question:

The staff does not concur that the Zimmer LOCA analysis is an appropriate break spectrum for CGS because of: 1) higher power level in CGS, 2) different fuel assembly design in CGS, and 3) higher PCTs predicted for CGS.

The staff requires that the applicant provide the following LOCA analyses to complete the break spectrum:

a. One additional recirculation line break with a C_D coefficient 0.6 times the DBA, using the large break model analysis.

b. One additional recirculation line break (0.02 ft^2) using the small break model analysis.

Response:

This issue has been closed on the LaSalle docket on the basis of information presented in response to NRC questions. Similar information has been provided in the revised response to CGS FSAR Question 211.068.

ISSUE: RSB-16 LOCA ANALYSIS
(6.3.4)

Question:

You have analyzed the effect on the DBA-LOCA of instantaneous closure of the flow control valve (FCV) in the unbroken loops. This overly conservative result indicated an increase in peak clad temperature (PCT) of 300°F which, if added to the DBA-L0CA PCT, would be in excess of the maximum PCT criterion of 10 CFR 50.46.

Response:

The response to this issue was provided in Amendment No. 11 as a response to Question 211.083. The response to this question is summarized and expanded upon below.

FCV closure in the unbroken loop is not expected to occur during the LOCA event. However, even if the FCV were signaled to close for some unlikely reason (LOCA plus two failures: failure of drywell high pressure signal such that FCV lockup does not occur, and failure of FCV controls), backup electronic velocity-limiters are included in the recirculation control system to limit FCV velocity to 10 ± 1% actuator stroke rate. Additional multiple specific component failures in these limiters must occur to cause full closure of the FCV at velocities in excess of this value. The combined probability of occurrence of these specific failure modes during LOCA is less than 10^{-6} per year. Accordingly, the electronically limited rate of 10 ± 1% of FCV actuator stroke/rate is considered a realistic yet conservative closure rate.

Using approved standard licensing models, ECCS analyses were performed to determine the effect (sensitivity) on peak cladding temperature from FCV closure at the 11% per second rate. The calculated maximum peak temperature increase was ≤45°F for CGS. This contrasts markedly with the approximate 300°F rise in cladding temperature associated with an arbitrary assumption of instant closure of the FCV, as was cited on another BWR/5 docket.

Thus, the peak cladding temperature effect is concluded to be very small. The probability of FCV fast closure simultaneously with a LOCA is extremely remote. Accordingly, fast FCV closure in conjunction with the DBA-LOCA is not expected to occur and need not be compared to the maximum PCT criterion of 10 CFR 50.46.

ISSUE: RSB-17 OPERATOR ACTION, ANALYSIS OF CRACK IN THE RHR LINE (6.3.4)

Question:

Provide the following information related to pipe breaks or leaks in high or moderate energy lines outside containment associated with the RHR system when the plant is in a shutdown cooling mode.

a. Provide the discharge rate from pipe breaks for the systems outside containment used to maintain core cooling. This valve should be consistent with the requirements of SRP 3.6.1 and BTP APCSB 3-1.

b. Determine the time frame available for recovery based on these discharge rates and their effect on core cooling.

c. Describe the alarms available to alert the operator to the event, the recovery procedures to be utilized by the operator, and the time available for operator action.

A single failure criterion consistent with SRP 3.6.1 and BTP ABCSB 3-1 should be applied in the evaluation of the recovery procedures utilized.

Response:

a. The RHR system is a low pressure system, and all of the piping outside of the primary coolant pressure boundary is classified as "moderate energy" piping and, according to the NRC standards cited, only cracks (i.e., not breaks) are considered in moderate energy piping. Reactor vessel pressure must be decreased to below 135 psig before the RHR system can be connected to the reactor vessel. The largest suction pipe is 24 in. Schedule 40 pipe. A crack in this pipe corresponding to the maximum crack size would produce a flow rate of 1443 gpm, with no allowance for flow reduction due to two-phase flow. This is the maximum possible in any RHR system pipe. A crack of this magnitude would be detected by the leak detection system or area radiation detectors and sump alarms. Isolation of the reactor would occur by operator action, or automatically from the leak detection system or from the reactor protection system on Level 3 reactor water level.

b. If a break should occur in one RHR shutdown cooling loop outside the containment during shutdown, the following action is taken upon detection and isolation. The main steam isolation valves will be reopened and reactor excess

steam will blow down to the main condenser until the shutdown cooling process via the other RHR loop is established. Time: less than 1 hour.

The redundant shutdown cooling loop components are also not assumed to fail under the cited NRC requirements of BTP APCSB 3-1.

If the pipe crack should occur in the common manifold supplying both redundant loops, the isolation mechanism is the same as before, but recovery would require reversion to the alternate shutdown configuration discussed in Section 15.2.9. In this configuration, vessel water is circulated from the suppression pool to the RHR heat exchanger to the vessel with return to the suppression pool via the ADS discharge lines. Time: less than 1 hour.

If the pipe crack should occur in the RHR service water piping, sump alarms would result in operator isolation of that loop and establishment of cooling in the redundant shutdown loop. Time: less than 1 hour.

In evaluating the above analysis, the following is also offered. If the main condenser vacuum has been lost and the MSIVs are already closed prior to the crack occurrence, reestablishment of condenser vacuum, MSIV reopening, vessel inventory control, and restart of steam dump to the main condenser is possible in about 2 hours. Vessel inventory can be controlled by overflow through the reactor water cleanup system if too high, and by use of feedwater pumps or HPCS/LPCS/LPCI if too low. Vessel pressure is controlled by manual operation of safety/relief valves on MSIV closure as required.

c. The alarms available have been described in the response to part (a) and part (b) of this question. The recovery procedures to be utilized by the operator, and the time available for operator action are provided below.

A special analysis was made by a hypothesized crack in the BWR suction line outside of primary containment during operation in the shutdown cooling mode. This analysis was performed with the standard GE LOCA models. For this event, the realistic or actual system conditions are as follows:

> *No high pressure systems are available for water inventory restoration, i.e., no feedwater, no HPCS, and no RCIC, but the reactor water level is at normal elevation at the start of this event. Vessel pressure is less than 150 psia and the MSIVs are closed at the start of this event. The decay heat is approximately 1% of rated power, i.e., approximately 4 hours have elapsed subsequent to reactor scram or shutdown.*

For a conservative solution to this hypothetical event, the following sequence of events and conditions were assumed to exist or ensue from the hypothesized crack in the suction line:

a. Crack occurs in the RHR lines water; level decreases to reactor vessel Level 3; then RHR isolation commences and is completed 40 seconds later.

b. System pressure rises as a result of the isolation to where the vessel pressure reaches the SRV setpoint, thus causing them to open, blow down, and reclose.

c. Inventory depletion results from blowdown and from leakage out of these cracked lines.

d. The operator manually actuates ADS to reduce vessel pressure to where the low pressure ECCS can replenish the water inventory.

e. Water level is restored to within normal limits to protect the core from over temperature.

Results are presented in Figures I.8-1 through I.8-4 for a bounding calculation of this event. The standard Appendix K assumptions were used along with these conservative initial conditions.

a. The timing index was started at the RHR isolation (when Level 3 was attained) to neglect the time for the level to fall from normal water level to Level 3 (about 2 minutes).

b. An initial pressure of 1055 psia was assumed to neglect the pressure rise time from the 150 psia (pressure permissive for shutdown cooling) upon completion of the RHR isolation to the 1055 pressure attainment. This results in increased mass loss during the 40-second isolation period due to greater driving pressure. It also decreases the time increment needed for pressure to attain the relief valve setpoint.

c. The analysis assumes that scram occurs coincident with the start of the timing instead of 4 hours earlier. This assumption maximizes the peak clad temperature and steam production during the transient thus driving more fluid from the vessel and prolonging the blowdown phase.

d. Only one LPCS and one LPCI loop were assumed to be available throughout the event. Operator action does not include possible diversion of the other two LPCI loops from the RHR mode.

e. The crack area used in the analysis is defined consistently with the MEB 3-1 guidance for crack size. This crack area is consistent with FSAR postulates.

Results from this conservative analysis show that more than 20 minutes are available for the operator to depressurize the vessel. Once the system pressure is below the LPCI or LPCS shutoff head, the reactor water level is restored to normal limits very rapidly. The maximum clad temperature is much less than the arbitrary 2200°F limitation.

ISSUE: RSB-18 LOCA ANALYSIS - DIVERSION OF LOW PRESSURE COOLANT INJECTION SYSTEM (6.3.4)

Question:

The issue is… "If low pressure coolant injection diversion prior to ten minutes is allowed by design, then procedural restrictions alone are not sufficient unless analyses are submitted which show compliance with 10 CFR 5O.46 for diversion earlier than ten minutes."

Response:

Analyses of BWR performance following a small break LOCA and LOCA mitigation under degraded conditions have been performed by General Electric as a part of the BWR Owners' Group program. Analyses bases, assumptions, and conclusions are discussed in GE report NEDO-24708A, Revision 1, December 1980, entitled, "Additional Information Required for NRC Staff Generic Report on Boiling Water Reactors." Reference is made to 3.1.1 (Small Break LOCA) and 3.5.2 (Inadequate Core Cooling). It should be noted that these analyses were performed utilizing "realistic" assumptions as defined in 3.1.1.2 and 3.5.2.4. The conclusion, 3.5.2.1.8, summarizes the capability of the BWR to maintain adequate core cooling, even under severely degraded conditions resulting from multiple failures and operator errors, following a loss of inventory either through a pipe break or through the safety relief/valve.

Based on the first group of analyses presented, it was concluded that for any plant and any loss of inventory event, the ability of ADS and one low pressure ECC system provides adequate core cooling if no high pressure injection is available. These analyses covered the case of multiple mechanical or electrical failures and operator errors that might have caused the failure of the system, assumed to be unavailable.

The second set of analyses addressed the condition of the vessel being at high pressure with a low water level. It was shown that operator actions either to initiate high pressure systems or to depressurize the vessel and initiate at least one low pressure system, terminate this condition

and assure adequate core cooling. The analyses showed that even for such severely degraded transients, there is sufficient time for operator action to mitigate the consequences.

The third set of analyses addressed the condition of the vessel being at low pressure with a low water level but with the low pressure systems not injecting. It was shown that operator actions either to start the low pressure systems injecting into the vessel or to initiate the high pressure systems, terminate this condition and assure adequate core cooling.

For all analyses, it was shown that the process variable information available to the operator in the control room is sufficient to adequately warn of an inventory threatening event and to present the information the operator needs to assure that appropriate actions are taken to maintain adequate core cooling. The control room indications will not mislead the operator when taking corrective actions. Even under the extremely degraded conditions considered in these analyses, the BWR requires only the most basic operator actions to mitigate the consequences of an inventory threatening event.

If the operator were to divert LPCI prior to ten minutes post-LOCA, such an action would be considered an operator error. Since the current ECCS performance evaluation already assumes the accident, a loss of offsite power and a worst active single failure, an additional operator error is considered to be an additional Appendix K assumption. It is therefore appropriate that the "realistic" assumption analyses be considered for this situation as stated in the conclusion in NEDO-24708A "for any plant and any loss of inventory event, the adequate availability of ADS and one low pressure ECC system provides adequate core cooling…"

This analysis is deemed acceptable to provide satisfactory assurance of acceptable event consequences, in consideration of the equipment failures and operator errors assumed.

To resolve the concern of the NRC staff that premature diversion of low pressure coolant injection (LPCI) flow to containment sprays could adversely effect core cooling, the CGS symptom based emergency procedures will be carefully constructed to caution the operator against such diversion unless "adequate core cooling is assured." These procedures, which were developed with the assistance of the BWR Owners' Group and reviewed and accepted by the NRC staff, clearly identify LPCI diversion as secondary to the core cooling requirements except in those instances, outside the plant design envelope, which involve multiple failures and for which maintenance of containment integrity is required to minimize risk to the environment.

ISSUE: RSB-19 FAILURE OF FEEDWATER HEATER
(15.1)

Question:

The applicant's analysis for the failure of the feedwater heater indicates that the temperature drop is no greater than 100°F. At a domestic boiling water reactor an actual feedwater temperature occurred which demonstrated a temperature difference of 150°F. The applicant must justify the decrease in temperature drop used for this event or recalculate the transient by using a justified temperature decrease to assure conformance with applicable criteria.

Response:

Refer to revised response to Question 211.087.

ISSUE: RSB-20 USE OF NONRELIABLE EQUIPMENT IN ANTICIPATED OPERATIONAL TRANSIENTS
(15.1)

Question:

In analyzing anticipated operational transients, the applicant took credit for equipment which has not been shown to be reliable. Our position is that this equipment be identified in the technical specifications with regard to availability, setpoints, and surveillance testing. The applicant must submit its plan for implementing this requirement along with any system modification that may be required to fulfill the requirement.

Response:

The response to the above stated concern is provided in response to Questions 211.085, 211.086, and 211.155.

ISSUE: RSB-21 USE OF NON-SAFETY GRADE EQUIPMENT IN SHAFT SEIZURE ACCIDENT
(15.3)

Question:

The applicant included the use of non-safety grade equipment in his analysis for shaft seizure and shaft break accidents. We require that these accidents be reanalyzed without allowance for the use of non-safety grade equipment.

Response:

The response to the above stated concern is provided in the revised response to Question 211.092. Questions 211.185 and 211.211 also reference this concern.

ISSUE: RSB-22 ATWS (15.2.1)

Question:

We require that the applicant agrees to implement plant modifications on a scheduled basis in conformance with the Commission's final resolution of ATWS. In the event that LaSalle starts operation before necessary plant modifications are implemented, we require some interim actions be taken by LaSalle in order to further reduce the risk from ATWS events. The applicant will be required to:

a. Develop emergency procedures to train operators to recognize an ATWS event, including consideration of scram indicators, rod position indicators, flux monitors, vessel level and pressure indicators, relief valve and isolation valve indicators, and containment temperature, pressure, and radiation indicators.

b. Train operators to take action in the event of an ATWS including consideration of immediately manual scramming the reactor by using the manual scram buttons followed by changing rod scram switches to the scram position, stripping the feeder breakers on the reactor protection system power distribution buses, opening the scram discharge volume drain valve, prompt actuation of the standby liquid control system, and prompt placement of the RHR in the pool cooling mode to reduce the severity of the containment conditions.

Response:

See 1.5.1.1.2 for a discussion of CGS modifications which addresses compliance to the final ATWS rule. The required procedure development and operator training were accomplished prior to fuel load.

ISSUE: RSB-23 PEACH BOTTOM TURBINE TRIP TESTS
(4.4.1, 4.4.2)

Question:

These tests have been evaluated and assessed using the ODYN computer code.

Response:

The NRC has completed their review of the ODYN Code. See the Safety Evaluation Report letter of November 4, 1980.

Also, see Chapters 4 and 15. The appropriate sections of these chapters have been revised utilizing results of re-analysis of required transients using the ODYN Code. See the revised response to Question 211.049.

Refer also to RSB-4.

ISSUE: RSB-24 MCPR
(4.4.1, 4.4.2, 15.1)

Question:

After completion of over-pressure analysis, the minimum critical power ratio must be recalculated taking into consideration the turbine trip without bypass event.

The transient of generator load rejection without bypass results in an MCPR equal to 1.02 which is below the safety limit of 1.06. The applicant classified this event an infrequent occurrence which would allow some fuel damage. We do not concur with this classification for this event, and we require that the operating limit be modified to satisfy the MCPR limit of 1.06.

Response:

The response to the above stated concern is provided in revised response to Question 211.084.

ISSUE: RSB-25 GEXL CORRELATION

Question:

Although we conclude that the GEXL correlation is acceptable for initial core load, we are concerned that GEXL correlation may not be conservative for reload operation.

Response:

Columbia Generating Station will use the applicable correlation to predict the onset of transition boiling for all reloads.

ISSUE: RSB-26 STABILITY EVALUATION

Question:

Please refer to NRC Question 221.009 for this question.

Response:

Please refer to the response to NRC Question 221.009.

ISSUE: RSB-27 SCRAM DISCHARGE VOLUME

Question:

The applicant should assess, reevaluate, and possibly modify the present scram system in light of the incident at Browns Ferry 3, where a manual scram failed to insert all control rods.

Response:

The CGS scram discharge volume (SDV) design has been evaluated against the NRC generic study "BWR Scram Discharge System Safety Evaluation" of December 1, 1980. The results of this evaluation indicated that the current CGS scram discharge system design was acceptable with implementation of some minor modifications. A summary of the evaluation results and the required modifications are provided below.

a. Hydraulic Coupling - The current SDV design provides two separate scram discharge volume headers, with an integral instrumented volume (IV) at the end of each header. This design configuration ensures a direct hydraulic couple between the SDVs and IVs.

b. Instrumentation - The existing level sensors (six total) are all of one design, i.e., float type (magnetrol) level switches. To meet the specified requirements, six additional diverse level sensors will be added to provide full redundancy for level monitoring and scram initiation. In addition, all level instrumentation will be relocated and repiped directly to the IVs rather than being connected to the vent and drain lines.

c. Vent and Drain Lines - The CGS design incorporates an independent vent and drain system for the SDV. The scram discharge headers are presently vented directly to the reactor building atmosphere and the system drain is piped directly from the bottom of the IVs to the building's radioactive drain system. A second vent valve and drain valve will be added to provide redundant SDV isolation during a reactor scram.

d. Surveillance Testing - Additional surveillance test procedures will be implemented to ensure operability of the level instruments, vent and drain isolation valves, as well as the overall system.

Please refer to response to Question 010.041.

ISSUE: RSB-28 SRV SURVEILLANCE

Question:

A safety/relief valve surveillance program should be developed to record operating and maintenance experience to facilitate identification of generic safety/relief valve problems.

Response:

CGS will develop a surveillance program for safety/relief valves similar to that being developed by the BWR Owners' Group submitted to the NRC by letter GO2-81-563, G. D. Bouchey to A. Schwencer, "LRG Appendix I," dated December 30, 1981.

The CGS safety/relief valve surveillance program will be available for onsite review.

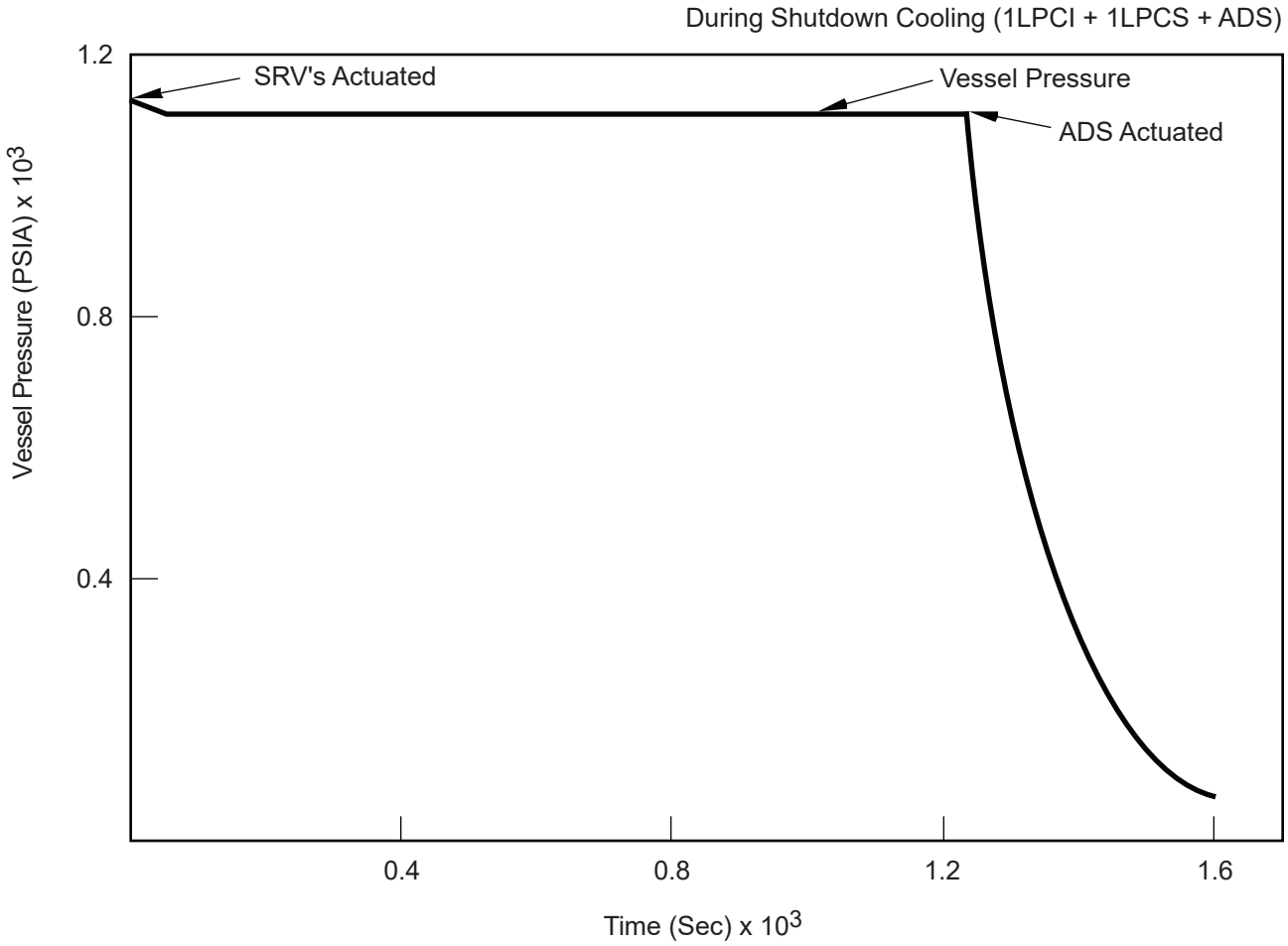

Columbia Generating Station Final Safety Analysis Report	Vessel Pressure Versus Time for a Crack in the RHR Line		
	Draw. No. 970187.15	Rev.	Figure I.8-1

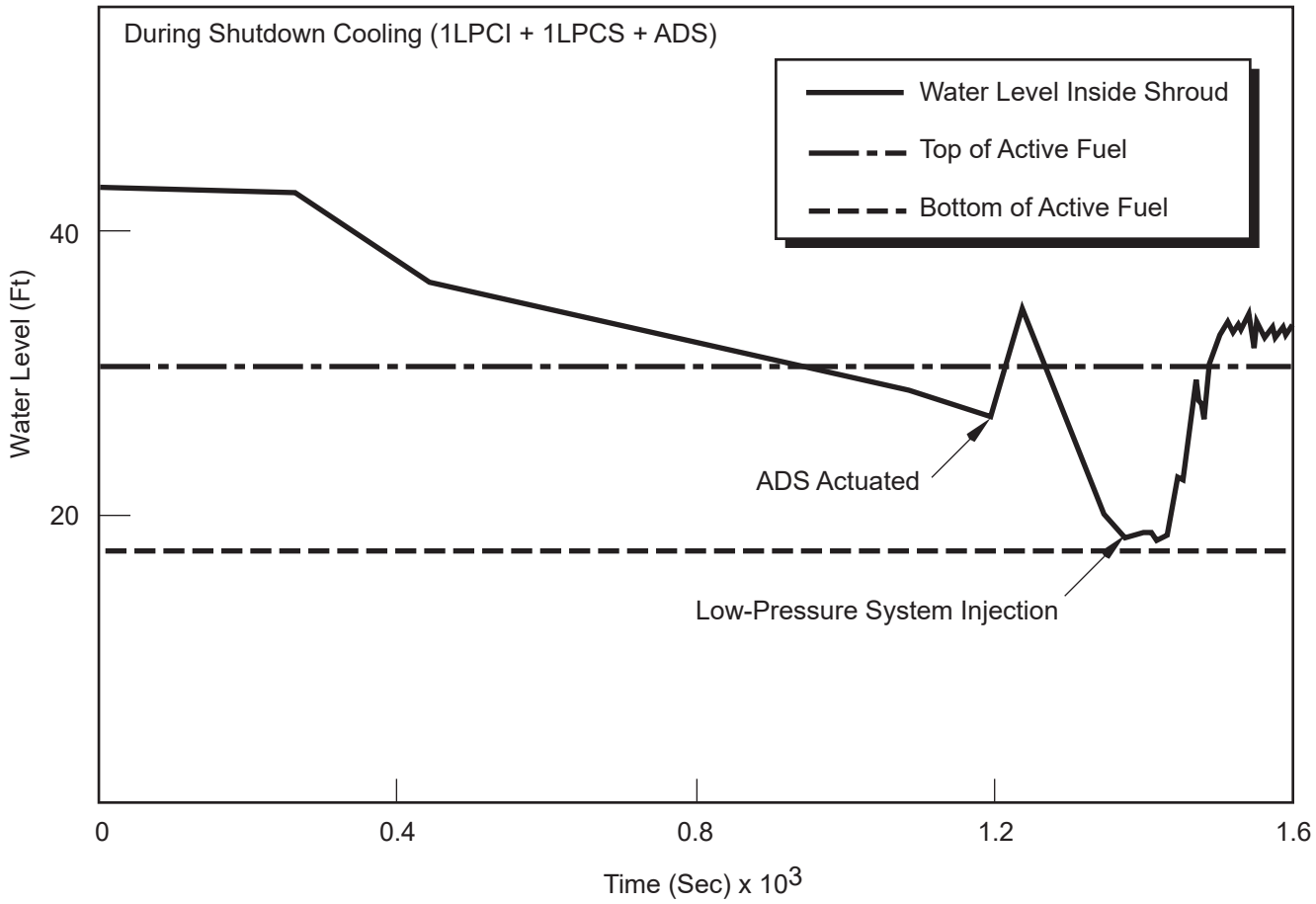

Columbia Generating Station Final Safety Analysis Report	**Water Level Versus Time for a Crack in the RHR Line**		
	Draw. No. **970187.16**	Rev.	Figure **I.8-2**

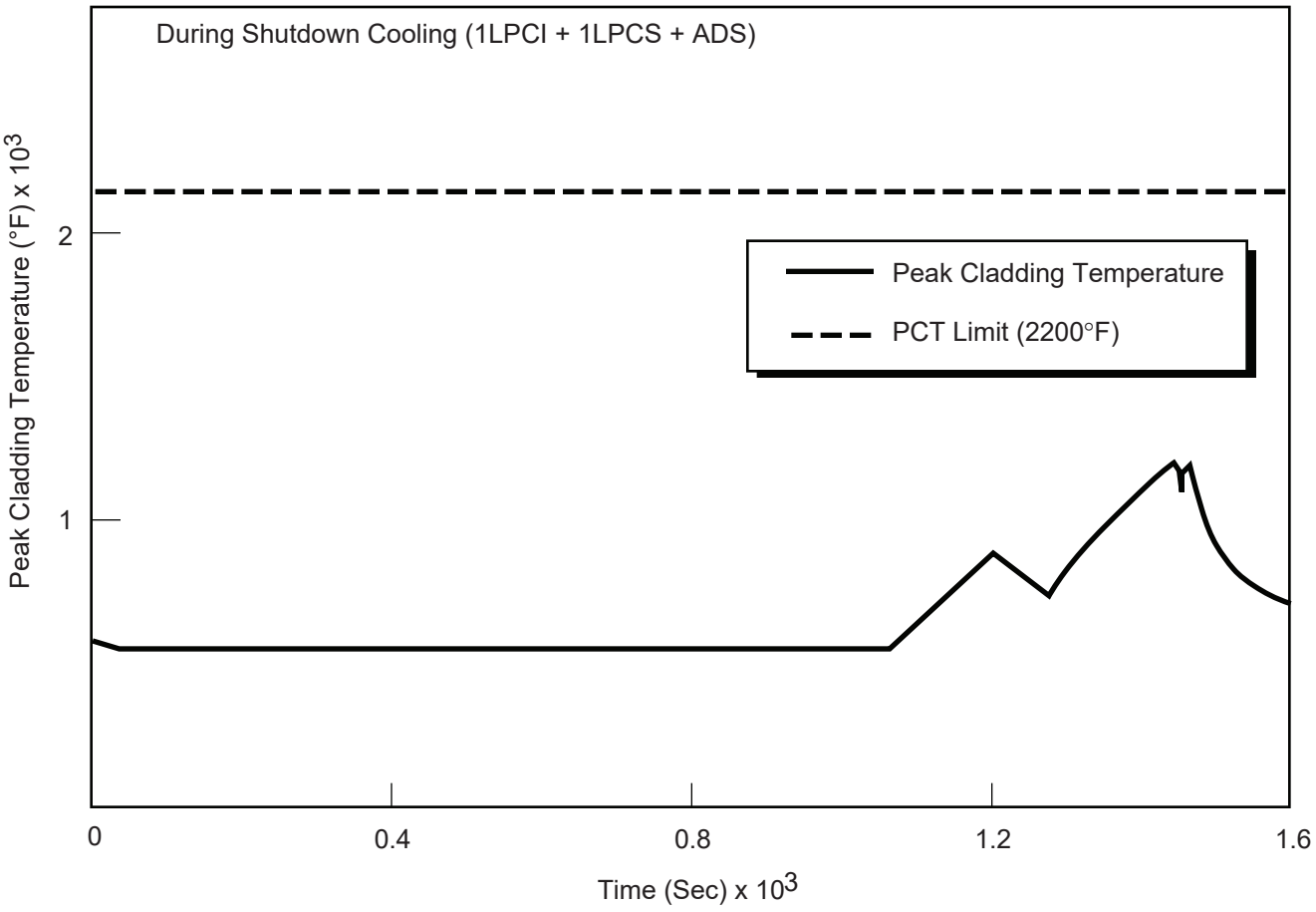

Columbia Generating Station Final Safety Analysis Report	**Peak Cladding Temperature Versus Time for a Crack in the RHR Line**		
	Draw. No. **970187.17**	Rev.	Figure **I.8-3**

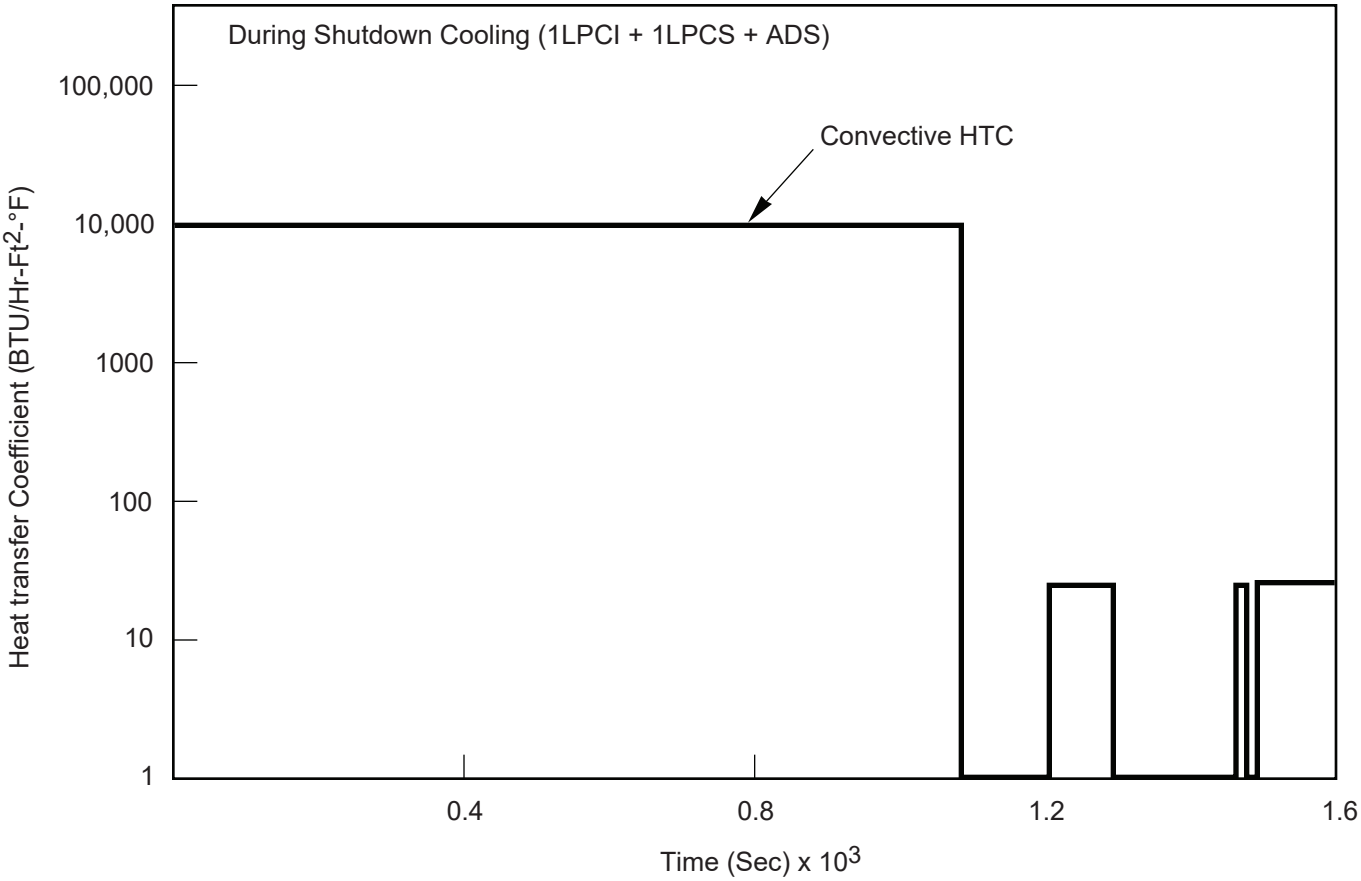

Columbia Generating Station Final Safety Analysis Report	**HTC at PCT Node Versus Time for a Crack in the RHR Line**		
	Draw. No. **970187.18**	Rev.	Figure **I.8-4**

Appendix J

SHIELDING EVALUATION REPORT

Burns and Roe, Inc., performed the analysis of radiation levels occurring inside primary containment, assembled, edited, reviewed, and approved this technical report for Energy Northwest.

EDS Nuclear Incorporated performed the analysis of radiation levels occurring in the reactor building secondary containment under subcontract to Burns and Roe, Inc. Later revisions have been issued by Energy Northwest to incorporate plant changes.

Energy Northwest performed the analysis of radiation levels occurring in areas outside the reactor building secondary containment.

Appendix J

SHIELDING EVALUATION REPORT

TABLE OF CONTENTS

Section — Page

SUMMARY ..... J-xv
ABSTRACT ..... J-xvi

J.1 INTRODUCTION J.1-1

J.2 REQUIREMENTS J.2-1
J.2.1 SHIELDING EVALUATION REGULATORY REQUIREMENTS J.2-1
J.2.1.1 Accident Analysis Requirements J.2-2
J.2.1.2 Source Term Assumptions J.2-2
J.2.1.3 Vital Area Access Requirements J.2-3
J.2.1.4 Systems Containing the Sources J.2-4
J.2.1.5 Safety-Related Equipment (C1E/SRM) J.2-4
J.2.2 SHIELDING EVALUATION TASK DESCRIPTION J.2-4
J.2.3 SHIELDING EVALUATION ITEM DELETED FROM SHIELDING ANALYSIS CONSIDERATION J.2-5

J.3 ANALYTICAL METHODOLOGY J.3-1
J.3.1 ACCIDENT SCENARIO J.3-1
J.3.2 CONTAMINATED SYSTEMS J.3-1
J.3.2.1 Systems Included for Primary Containment Analysis J.3-2
J.3.2.2 Systems Included for Secondary Containment Analysis J.3-2
J.3.2.3 Systems Excluded J.3-3
J.3.3 SOURCE TERM ASSUMPTIONS J.3-3
J.3.4 TIME PERIOD CONSIDERED FOR STUDY J.3-4

J.4 ACCESS AND OCCUPANCY OF VITAL AREAS J.4-1
J.4.1 DOSE RATES OUTSIDE THE REACTOR BUILDING J.4-1
J.4.2 VITAL AREAS AND ACCESS ROUTES OUTSIDE THE REACTOR BUILDING J.4-2
J.4.3 VITAL AREAS AND ACCESS ROUTES INSIDE THE REACTOR BUILDING J.4-2

J.5 METHODS J.5-1
J.5.1 THE USE OF COMPUTER CODES J.5-1
J.5.2 SOURCE TERM DEVELOPMENT FOR PRIMARY CONTAINMENT J.5-2

Appendix J

SHIELDING EVALUATION REPORT

TABLE OF CONTENTS (Continued)

Section — Page

J.5.3 SOURCE TERM DEVELOPMENT FOR SECONDARY CONTAINMENT J.5-2
J.5.3.1 Parametric Studies for Direct Piping Dose in Secondary Containment J.5-3
J.5.3.2 Dose Rate and Cumulative Dose Calculation Procedure J.5-3
J.5.3.2.1 Calculation of Airborne Gamma Doses Inside Secondary Containment J.5-4
J.5.3.2.2 Procedure for the Calculation of Radiation Zone Dose in Secondary Containment J.5-5
J.5.3.3 Calculation of Radiation Doses Due to Special Systems and Components Inside Secondary Containment J.5-6
J.5.3.3.1 Source Term Assumptions in Secondary Containment J.5-6
J.5.3.3.2 Secondary Containment Analysis Method J.5-8
J.5.3.3.3 Calculation of Radiation Doses Inside Secondary Containment on Generic Mechanical Equipment J.5-8
J.5.4 SOURCE TERM DEVELOPMENT FOR C1E/SRM EQUIPMENT OUTSIDE THE REACTOR BUILDING J.5-9
J.5.5 METHODOLOGY OF BETA DOSE ANALYSIS J.5-9

J.6 RESULTS J.6-1
J.6.1 PRIMARY CONTAINMENT RADIATION RESULTS J.6-1
J.6.2 SECONDARY CONTAINMENT RADIATION RESULTS J.6-2
J.6.3 RADIATION RESULTS IN THE VITAL AREAS AND ACCESS ROUTES J.6-3

J.7 REFERENCES J.7-1

ATTACHMENTS

J.A UNISOLATED LEAKING BUILDING PATH REPORT J.A-1

J.B SOURCE TERM DEVELOPMENT AND PARAMETRIC STUDIES FOR SECONDARY CONTAINMENT J.B-1
J.B.1 RADIOACTIVE SOURCE TERMS IN SECONDARY CONTAINMENT J.B-1
J.B.2 AIRBORNE DOSE IN SECONDARY CONTAINMENT J.B-2

Appendix J

SHIELDING EVALUATION REPORT

TABLE OF CONTENTS (Continued)

Section — Page

J.B.3 PARAMETRIC STUDIES FOR DIRECT PIPING DOSE J.B-12
J.B.3.1 Functional Dependence of Various Parameters on Secondary Containment Dose Rates J.B-13
J.B.3.2 Parametric Study Procedures J.B-14
J.B.3.3 Direct Dose Parametric Study Results Inside Secondary Containment J.B-14
J.B.3.4 Correction Factor Method of Determining Direct Doses in Secondary Containment J.B-15

J.C PROCEDURE FOR THE CALCULATION OF SECONDARY CONTAINMENT RADIATION ZONE GAMMA DOSES J.C-1
J.C.1 INTRODUCTION J.C-1
J.C.2 DEFINITION OF TERMS J.C-2
J.C.3 ASSUMPTIONS, APPROXIMATIONS, AND LIMITATIONS J.C-4
J.C.3.1 Basic Assumptions to be Used in the Analysis J.C-4
J.C.3.1.1 Assumptions Used in the Calculation of Airborne Dose Rate Inside Secondary Containment J.C-5
J.C.3.1.2 Assumptions Used for the Calculation of Shine or Streaming Dose From Primary Containment J.C-6
J.C.3.1.3 Assumptions and Approximations Used in the Calculation of Direct Doses J.C-6
J.C.3.2 Limitations J.C-7
J.C.4 PROCEDURES FOR THE CALCULATION OF SECONDARY CONTAINMENT RADIATION ZONE DOSES J.C-8
J.C.4.1 Procedure A: Radiation Zone Dose Calculation J.C-8
J.C.4.2 Procedure B: Airborne Dose Calculation in Secondary Containment J.C-8
J.C.4.3 Procedure C: Primary Containment Shine Dose Calculation J.C-9
J.C.4.4 Procedure D: Direct Dose Calculation J.C-9
J.C.4.5 Procedure E: QAD-P5A Modeling Procedure J.C-11
J.C.4.6 Procedure F: Streaming Dose Calculation J.C-12

J.D CALCULATION OF THE RADIATION J.D-1
J.D.1 DESCRIPTION OF THE STANDBY GAS TREATMENT SYSTEM FILTERS J.D-1
J.D.2 CALCULATION OF TIME-DEPENDENT FILTER ACTIVITY CONCENTRATION J.D-2

Appendix J

SHIELDING EVALUATION REPORT

TABLE OF CONTENTS (Continued)

Section — Page

J.D.3 CALCULATION OF RADIATION DOSE FROM THE STANDBY GAS TREATMENT SYSTEM FILTER J.D-7

J.E BETA DOSE CALCULATION METHOD J.E-1

J.F PRIMARY CONTAINMENT ANALYSES J.F-1
J.F.1 STATEMENT OF PROBLEM J.F-1
J.F.2 BASIC APPROACH J.F-1
J.F.3 DRYWELL J.F-2
J.F.3.1 Sources J.F-2
J.F.3.1.1 Reactor (Normal Operation - Drywell) J.F-3
J.F.3.1.2 Systems (Normal Operation - Drywell) J.F-4
J.F.3.1.3 System (Post-Loss-of-Coolant Accident) - Drywell J.F-4
J.F.3.1.4 Airborne - Drywell J.F-5
J.F.3.1.5 Plateout - Drywell J.F-5
J.F.3.1.6 Wetwell - Drywell J.F-6
J.F.4 WETWELL J.F-6
J.F.4.1 Sources J.F-7
J.F.4.1.1 Airborne - Wetwell J.F-7
J.F.4.1.2 Plateout - Wetwell J.F-8
J.F.4.1.3 Suppression Pool - Wetwell J.F-8
J.F.5 QAD-CG MODEL J.F-8
J.F.6 CODES J.F-9
J.F.6.1 FSPROD J.F-9
J.F.6.2 ORIGEN2 ..... J.F-10
J.F.6.3 QAD-BR J.F-10
J.F.6.4 QAD-CG J.F-10
J.F.6.5 KAP-V J.F-10
J.F.6.6 ANISN J.F-10

J.G BETA DOSE CONTRIBUTION IN PRIMARY CONTAINMENT J.G-1

Appendix J

SHIELDING EVALUATION REPORT

TABLE OF CONTENTS (Continued)

Section — Page

J.H VITAL AREAS AND ACCESS ROUTES ANALYZED FOR POST-LOSS-OF-COOLANT ACCIDENT OPERATIONS J.H-1
J.H.1 SOURCE OF RADIOACTIVITY TO THE REACTOR BUILDING ELEVATED VENT J.H-1
J.H.1.1 Reactor Building Air Discharge Rate J.H-1
J.H.2 POSTACCIDENT DESIGN DOSE (PADD) J.H-2
J.H.2.1 Assumptions Used in χ/Q Calculation Methodology J.H-3
J.H.2.2 Integrated Activity Equations Used in this Analysis J.H-4

Appendix J

SHIELDING EVALUATION REPORT

LIST OF TABLES

Number	Title	Page
J.3-1	Distribution of Fission Products in the Worst Post-Loss-of-Coolant Accident Situation for Areas Inside Containment Depressurized Reactor Coolant System	J.3-5
J.3-2	Distribution of Fission Products in the Worst Post-Loss-of-Coolant Accident Situation for Areas Inside Containment Pressurized Reactor Coolant System	J.3-6
J.3-3	Distribution of Fission Products in the Worst Post-Loss-of-Coolant Accident Situation for Areas Outside Containment	J.3-7
J.3-4	System Operation and Source Term Assumptions	J.3-8
J.5-1	Generic Mechanical Equipment	J.5-11
J.6-1	Six-Month Total Integrated Dose (Loss-of-Coolant Accident) to Areas Containing C1E Equipment Outside the Reactor Building	J.6-5
J.6-2	Vital Areas and Access Route List of Radiation Exposure to Personnel During the Required Post-Loss-of-Coolant Accident Operations	J.6-6
J.A-1	System Flow Diagrams Employed to Perform the Review	J.A-3
J.B-1	Gamma Energy Concentration (photons/sec-cm^3) in Liquid-Containing Systems	J.B-17
J.B-2	Comparison of Direct Dose Rate Results	J.B-18
J.C-l	Diameter Correction Factor (F_D) for Targets in Contact With the Source Piping	J.C-13
J.D-1	Direct Gamma Dose Rate and Integrated Dose Results for Targets in the Standby Gas Treatment System Room	J.D-9

Appendix J

SHIELDING EVALUATION REPORT

LIST OF TABLES (Continued)

Number	Title	Page
J.E-1	Dose Rate Reduction Factors for the Post-Loss-of-Coolant Accident Beta Energy Groups at Finite Volumes	J.E-5
J.F-1	Integrated Dose in Drywell	J.F-11
J.F-2	Integrated Dose in Wetwell	J.F-12
J.F-3	Approximate Dose Rate Reduction Factor Versus Distance from Core Mid-Plane for Reactor Integrated Dose	J.F-13
J.F-4	Suppression Pool and System (Loss-of-Coolant Accident) Liquid Source Terms 0-6 Month Average After Loss-of-Coolant Accident	J.F-14
J.F-5	Airborne Source Terms 0-6 Month Average After Loss-of-Coolant Accident	J.F-15
J.F-6	Drywell Plateout Source Terms 0-6 Month Average After Loss-of-Coolant Accident	J.F-16
J.F-7	Time Mesh Spacing Used in Source Calculations (Minutes)	J.F-17
J.F-8	Source Energy Group Structure	J.F-18
J.G-1	Dose Rate Reduction Factors for the Post-Loss-of-Coolant Accident Beta Energy Groups at Finite Volumes	J.G-5
J.H-1	Post-Loss-of-Coolant Accident χ/Q Values Used for Calculations of Integrated Doses Outside the Reactor Building	J.H-9

Appendix J

SHIELDING EVALUATION REPORT

LIST OF FIGURES

Number	Title
J.5-1	Dose Model Liquid Source
J.5-2	Sixth Month Integrated Fluid Contact Dose for MS, RCIC (Steam) System, and MSLC System Upstream of the Header
J.5-3	Sixth Month Integrated Fluid Contact Dose for Pipes Containing Liquid Source Term (RHR, HPCS, LPCS, RCIC Liquid Systems)
J.6-1	Forty-Year Integrated Dose - Turbine Generator Building (El. 441 ft 0 in.) (Sheets 1 and 2)
J.6-2	Forty-Year Integrated Dose - Turbine Generator Building (El. 471 ft 0 in.) (Sheets 1 and 2)
J.6-3	Forty-Year Integrated Dose - Turbine Generator Building (El. 501 ft 0 in.) (Sheets 1 and 2)
J.6-4	Forty-Year Integrated Dose - Radwaste Building (El. 437 ft 0 in.)
J.6-5	Forty-Year Integrated Dose - Radwaste Building (El. 467 ft 0 in.)
J.6-6	Forty-Year Integrated Dose - Radwaste Building (El. 484 ft 0 in.)
J.6-7	Forty-Year Integrated Dose - Radwaste Building (El. 501 ft 0 in.)
J.6-8	Vital Areas and Access Routes - Radwaste Building (El. 437 ft 0 in.)
J.6-9	Vital Areas and Access Routes - Radwaste Building (El. 467 ft 0 in.)
J.6-10	Vital Areas and Access Routes - Radwaste Building (El. 484 ft 0 in.)
J.6-11	Vital Areas and Access Routes - Radwaste Building (E1. 501 ft 0 in.)
J.6-12	Vital Areas and Access Routes - Diesel Generator Building (El. 441 ft 0 in.)
J.6-13	Vital Areas and Access Routes

Appendix J

SHIELDING EVALUATION REPORT

LIST OF FIGURES (Continued)

Number	Title
J.6-14	Vital Areas and Access Routes - Post-LOCA Sampling (Roof)
J.6-15	Vital Area and Access Routes - Technical Support Center (El. 437 ft 0 in.)
J.6-16	Vital Area and Access Routes to Reactor Building Railroad Bay (El. 441 ft 0 in.)
J.6-17	Vital Areas and Access Routes - Reactor Building (El. 471 ft 0 in. and 501 ft 0 in.)
J.6-18	Vital Areas and Access Routes - Reactor Building (El. 522 ft 0 in. and 548 ft 0 in.)
J.B-1	Model of the Primary and Secondary Containment
J.B-2	Time-Dependent Gamma Dose Rate for a Semi-Infinite Cloud of Fission Products at Secondary Containment Concentrations
J.B-3	Illustration of Parameters Used in the Shielding Equation
J.B-4	Standard Gamma Dose Rate Curve for Liquid Containing Systems (RCIC Liquid System and RHR System)
J.B-5	Standard Integrated Gamma Dose Curve for Pipes in Liquid Containing Systems (RCIC Liquid System and RHR System)
J.B-6	Standard Gamma Dose Rate Curve for Pipes in the RCIC Steam System and MSIV-LCS Steam System Before the Header
J.B-7	Standard Integrated Gamma Dose Curve for Pipes in the RCIC Steam System and MSIV-LCS Steam System Before the Header
J.B-8	Standard Gamma Dose Rate Curve for Pipes in the MSIV-LCS Steam System After the Header

Appendix J

SHIELDING EVALUATION REPORT

LIST OF FIGURES (Continued)

Number	Title
J.B-9	Standard Integrated Gamma Dose Curve for Pipes in the MSIV-LCS Steam System After the Header
J.B-10	Deleted
J.B-11	Deleted
J.B-12	Radial Distance Correction Factor for Liquid Sources
J.B-13	Pipe Length Correction Factor for Liquid Sources
J.B-14	Pipe Diameter Correction Factor for Liquid Sources
J.B-15	Radial Distance Correction Factor for Gaseous Sources
J.B-16	Pipe Length Correction Factor for Gaseous Sources
J.B-17	Pipe Diameter Correction Factor for Gaseous Sources
J.B-18	Parameters Used for the Calculation of Length Correction Factor
J.C-1	Calculation of Length Correction Factor
J.C-2	Procedure A: Procedure for Calculating Radiation Zone Doses
J.C-3	Procedure B: Procedure for Calculating Airborne Gamma Dose Rate and Integrated Doses
J.C-4	Procedure C: Procedure for the Calculation of Containment Shine Dose
J.C-5	Procedure D: Procedure for the Calculation of Direct Dose Rate and Integrated Dose
J.C-6	Time-Dependent Gamma Dose Rate for a Semi-Infinite Cloud of Fission Products at Secondary Containment Concentrations

Appendix J

SHIELDING EVALUATION REPORT

LIST OF FIGURES (Continued)

Number	Title
J.C-7	Time-Dependent, Integrated Gamma Dose Rate for a Semi-Infinite Cloud of Fission Products at Secondary Containment Concentrations (0.5%/Day Primary Containment Leakage Rate)
J.C-8	Gamma Dose Rate at a Target 8 ft Away from Standard Pipe
J.C-9	Gamma Integrated Dose at a Target 8 ft Away from Standard Pipe
J.C-10	Pipe Diameter Correction Factor
J.C-11	Radial Distance Correction Factor
J.C-12	Pipe Length Correction Factor
J.C-13	Dose Rate Versus Concrete Shield - Thickness for Standard Pipe (8 in. Sch 40)
J.C-14	Pipe Diameter Correction Factor for Targets Located Axially in Line with Source Piping
J.C-15	Distance Correction Factor for Targets Located Axially in Line with Source Piping
J.D-1	Standby Gas Treatment Filter
J.D-2	Geometry of Prefilters and HEPA Filters
J.D-3	Geometry of Charcoal Filters
J.E-1	Total Integrated Beta Cloud Airborne Dose as a Function of Size
J.E-2	Integrated Beta Infinite Airborne Dose for the Reactor Building
J.F-1	Geometry Examples
J.F-2	Basic QAD-CG Drywell Model

Appendix J

SHIELDING EVALUATION REPORT

LIST OF FIGURES (Continued)

Number	Title
J.F-3	Isometric of Drywell Model
J.F-4	Isometric of El. 513 ft 6 in. to 520 ft 6 in.
J.F-5	Plan at El. 499 ft 6 in.
J.F-6	Plan at El. 506 ft 6 in.
J.F-7	Plan at El. 513 ft 6 in.
J.F-8	Plan at El. 520 ft 6 in.
J.F-9	Plan at El. 527 ft 6 in.
J.G-1	Total Integrated Beta Cloud Airborne Dose in Primary Containment as a Function of Size
J.G-2	Integrated Beta Infinite Airborne Dose for Primary Containment

SUMMARY

The Three Mile Island (TMI-2) accident has generated a concern that during an accident in which significant core damage occurs, the postaccident operations requiring the use of systems containing contaminated fluid may induce abnormally high radiation doses to safety-related equipment and components which make it difficult to operate the systems. The NRC initially addressed this concern with NUREG-0578 and NUREG-0737 and recommended a design review to evaluate the functional capability of safety-related equipment and radiation exposure to personnel during the postulated post-LOCA operations.

Radiation levels have been determined for all areas containing safety-related equipment, vital areas, and access routes which are required for the postulated post-LOCA operation.

Radiation levels determined for safety-related equipment inside primary containment. The analysis included the shadow shielding effect of installed equipment and the effect of iodine plateout were used to more accurately calculate the radiation levels inside containment.

Radiation levels were determined for safety-related equipment. The radiation source term leaking into secondary containment was reduced by the loss of halogens to plateout inside primary containment.

Radiation levels calculated for safety-related equipment outside secondary containment are reported in Table J.6-1.

Figures J.6-8 through J.6-18 identify the vital areas which require personnel access on either a continuous or infrequent basis during post-LOCA operations.

Safety-related equipment will either be qualified for the radiation level it functions in, or it will be relocated to a radiation zone it is qualified for, or it will be replaced with comparable equipment which is qualified for the particular radiation level that has been determined.

Vital areas and access routes were evaluated for post-LOCA operations and are reported in Table J.6-2 and Figures J.6-8 through J.6-18. All areas and access routes are in compliance with NUREG-0737.

ABSTRACT

This report presents a radiation shielding design review of the equipment and systems of the Energy Northwest Columbia Generating Station. The original report was prepared in September 1982. The equipment and systems are evaluated on the basis of a postulated accident which in addition to normal plant radiation levels during its 40-year life may contain highly radioactive fluids. This design review recommended by the NRC (NUREG-0578 and NUREG-0737) evaluates the functional capability of safety-related equipment and personnel radiation exposure during the postaccident operations.

This design review evaluates the postaccident radiation conditions for personnel located in vital areas (areas which require access or occupancy during the post-LOCA scenario) on either a continuous or infrequent basis.

The postulated loss-of-coolant accident (LOCA) scenarios and the operations of the safety-related systems were reviewed. Radioactive sources contained within each system were developed. Radiation levels were calculated at safety-related equipment locations, as well as at selected locations outside the reactor building to which access may be required for postaccident operations.

In accordance with 10 CFR 54.21(c)(1)(iii), the EQ Program will be used to manage the effects of aging on the intended functions of the components associated with EQ time-limited aging analyses (TLAA) for the period of extended operation because equipment will be replaced prior to reaching the end of its qualified life. Reanalysis addresses attributes of analytical methods, data collection and reduction methods, underlying assumptions, acceptance criteria, and corrective actions if acceptance criteria are not met. Reanalysis of aging evaluations to extend the qualification of components is performed on a routine basis pursuant to 10 CFR 50.49(e) as part of the Columbia EQ Program. As such, this change applies to any information based on a 40-year assumption in this appendix.

J.1 INTRODUCTION

This report presents a detailed description of the results and the review of plant shielding and radiation environmental conditions for equipment and systems which may be used in postaccident operations for Columbia Generating Station (CGS). The review was initiated in response to Section 2.1.6.b of NUREG-0578, "TMI-2 Lessons Learned Task Force Status Report and Short-Term Recommendation," and to Part II.B.2 of NUREG-0660, "NRC Action Plan Developed as a Result of the TMI-2 Accident."

The design review determined the postaccident radiation environmental conditions for equipment required for postaccident operations inside the primary containment, inside the secondary containment, and outside the secondary containment.

The 6-month total postaccident radiation dose rate as a function of time and the integrated dose were calculated at safety-related equipment locations inside the CGS reactor building, inside primary containment, and at selected locations (vital areas) outside the reactor building.

Section J.2 discusses the regulatory requirements on which this report is based and provides a description of the tasks performed for this shielding evaluation.

Section J.3 provides the systems review and source term assumptions used as input for the definition of the postaccident radiological environment.

Section J.4 discusses the work performed during this project relating to safety-related equipment located outside of the reactor building and the access and occupancy of vital areas. This consists of the calculation of dose rates outside the reactor building.

Section J.5 discusses the methods of calculation including the use of computer codes, identifying the parameters that have a significant effect on the radiation dose rates, and the dose rate and cumulative dose calculation procedure.

Section J.6 presents a summary of the results.

J.2 REQUIREMENTS

General Design Criterion 4 (10 CFR 50 Appendix A) requires that systems and components important to safety be designed to accommodate the environmental conditions associated with accidents. The Three Mile Island (TMI-2) accident has generated a concern that during an accident in which significant core damage occurs, the postaccident operations requiring the use of systems containing contaminated fluid may induce abnormally high radiation doses to safety-related equipment and components which may make it difficult to operate the systems. The NRC Lessons Learned Task Force initially addressed this concern in Section 2.1.6.b of NUREG-0578 (Reference J.7-1) and recommended a design review be performed on such systems so that the functional capability of safety-related equipment located in close proximity to the resulting high radiation field will not be unduly degraded.

Described in this section is a discussion of the current regulatory requirements and guidelines used.

J.2.1 SHIELDING EVALUATION REGULATORY REQUIREMENTS

NUREG-0578 Section 2.1.6.b requires that each licensee perform a radiation and shielding design review of the spaces around systems that may, as a result of an accident, contain highly radioactive materials. The scope of the review includes the following:

a. Identification of the locations of vital areas and safety-related equipment,

b. Evaluation of the radiation level at each location, and

c. Provision for adequate access to vital areas and assurances of postaccident equipment operation through design changes, increased permanent or temporary shielding, or postaccident procedural controls.

To perform this review, the NRC has provided guidance in the following documents ("documents of record"):

a. NUREG-0578, Section 2.1.6.b, Reference J.7-1,

b. NUREG-0588, Revision 1, Section 1.4, Reference J.7-2,

c. NUREG-0660, Section II.B.2, Reference J.7-3,

d. Clarification Letter to NUREG-0578, dated September 5, 1980, Section II.B.2, Reference J.7-4,

e. NUREG-0737, Section II.B.2, Reference J.7-5,

f. IE Bulletin No. 79-01B, Reference J.7-6, and

g.. IE Bulletin 79-01B, Supplement 2, dated September 30, 1980, Reference J.7-7.

The regulatory requirements in the above mentioned documents are summarized in the following sections.

J.2.1.1 Accident Analysis Requirements

The postaccident radiation environment should be based on the most severe design basis accidents (DBA) during or following which equipment must remain functional. This includes the consideration of the entire spectrum of loss-of-coolant accident (LOCA) events which can lead to a degraded core condition. These accident conditions include the following:

a. Loss-of-coolant accident events which completely depressurize the primary system, and

b. Loss-of-coolant accident events in which the primary system may not be depressurized.

J.2.1.2 Source Term Assumptions

The radioactive source terms for the postulated accident conditions as described in Section J.2.1.1 should be equivalent to the source terms recommended in Regulatory Guides 1.3 and 1.7 and Standard Review Plan Section 15.6.5. The source term assumptions consistent with current licensing requirements used for equipment qualification and access evaluations are summarized as follows:

a. The fission product fractions assumed to be released from the fuel rods during a LOCA are the following:

Noble gases	100%
Halogens	50%
Remaining fission products	1%

For the analyses, 50% of the halogens and 1% of the solids were assumed to be diluted into the suppression pool and liquid carrying systems. The halogens were also assumed to be in the airborne source while iodines were assumed in the plateout source. Thus, some care is necessary in summing calculated doses to prevent double counting of the sources. The post-LOCA source contribution from liquid and plateout sources are analyzed separately and the worst dose is

tabulated for that evaluation rather than the sum of both doses. Thus, double counting of the fission product fractions is eliminated where possible;

b. The above release is assumed to occur and be distributed instantaneously at the start of the accident. The plateout is assumed to occur over an effective time of 5 hr after the accident;

c. Until depressurized, liquid in the reactor coolant system (RCS) and other systems which are not isolated from the core and which contain the reactor coolant at the start of the LOCA contain 100% noble gases, 50% halogens, and 1% of the remaining fission products. These radioactive materials are mixed homogeneously in a volume no greater than the RCS liquid space;

d. Liquid in the suppression pool and any system not isolated from the core at the start of the LOCA, and containing only liquid from a depressurized source, is assumed to contain 50% halogens and 1% of the remaining fission products. These radioactive materials are diluted homogeneously in a volume no greater than the combined volumes of the suppression pool and the RCS liquid space;

e. The primary containment atmosphere and systems which are not isolated from the primary containment atmosphere at the start of the LOCA are assumed to contain at least 100% noble gases and 50% halogens initially. These radioactive materials are diluted homogeneously in a volume no greater than the combined volumes of the drywell and suppression pool air spaces; and

f. Primary containment plateout source term is obtained by allowing the airborne halogens released (50%) to plateout on primary containment surfaces in accordance with the guidelines presented in NUREG/CR-0009 until the airborne elemental iodine concentration is decreased by a factor of 200.

g. Until the reactor vessel is depressurized, gases in the steam lines and any other vapor-containing lines not isolated from the core at the start of the LOCA are assumed to contain at least 100% noble gases and 25% halogens. These are diluted uniformly in a volume no greater than the RCS steam space and adjoining unisolated steam lines.

J.2.1.3 Vital Area Access Requirements

As defined in NUREG-0737 (Reference J.7-5), a vital area is an area which will or may require occupancy to permit an operator to help in the mitigation of an accident or perform postaccident operations. The accident scenarios discussed in Section J.2.1.1 and the source term assumptions in Section J.2.1.2 are used for the evaluation of vital area access and occupancy. The total radiation exposure to personnel in vital areas should not be in excess of

5 rem whole body, or its equivalent, to any part of the body, for the duration of the accident. For areas requiring continuous occupancy (e.g., the control room, onsite technical support center, etc.), the dose rate criteria limits the total radiation exposure to less than 15 mrem/hr (averaged over 30 days).

J.2.1.4 Systems Containing the Sources

Systems considered in the shielding review are those systems that could have the potential of containing a high level of radioactivity postaccident. For those systems connected directly to the RCS or to the primary containment atmosphere and not isolated at the start of the accident, the radioactivity is assumed to be instantaneously mixed within the unisolated parts of the system.

J.2.1.5 Safety-Related Equipment (C1E/SRM)

The safety-related (C1E/SRM) equipment list contains all equipment necessary to mitigate the consequences of an accident, bring the plant to a safe shutdown condition, and provide long-term cooling capability. This list includes equipment located inside as well as outside the primary containment.

J.2.2 SHIELDING EVALUATION TASK DESCRIPTION

The shielding evaluation tasks which have been completed to date are as follows:

a. Review all accident scenarios and accident conditions that could result in a limiting radiation environment for all the pieces of safety-related equipment on the C1E/SRM (safety-related) list that are located in the reactor building;

b. Identify systems and components that could potentially contain radioactive materials postaccident;

c. Generate source term assumptions based on regulatory requirements discussed in Section J.2.1;

d. Calculate accident radiation service conditions for the safety-related equipment located inside the reactor building;

e. Calculate gamma dose rates at selected locations outside the reactor building due to radioactive sources inside the reactor building;

f. Identify vital areas and equipment to evaluate the access to and occupancy of the vital areas in accordance with the requirements listed in Section J.2.1;

g. Conduct a primary containment analysis of LOCA events in which the RCS may not depressurize (or may repressurize) with a degraded core condition. The primary containment radiation environment was determined with the use of 100% noble gases, 50% halogens, and 1% of the remaining fission products for the period of time during which the activity is isolated to the RCS;

h. Calculate the radiation dose to safety-related equipment in the reactor building from post-LOCA airborne radiation and from normal piping sources inside primary containment streaming through the bioshield wall penetrations; and

i. The safety-related equipment list contains all equipment required to "mitigate" the consequences of an accident, bring the plant to a safe shutdown condition, and provide long-term cooling capability. The completeness of the safety-related equipment list has been verified.

J.2.3 SHIELDING EVALUATION ITEM DELETED FROM SHIELDING ANALYSIS CONSIDERATION

Columbia Generating Station has addressed all the issues needed to comply with the NUREG-660 II.B.2 position except as follows: Columbia Generating Station takes exception to the portion of the task that specifies that a review of "safety-related" equipment which may be degraded by radiation during postaccident operation be provided for a non-LOCA, high-energy line break source term. The pipe break/missile analysis described in Sections 3.5 and 3.6 addresses nonmechanistic pipe breaks inside and outside containment. These pipe breaks do not lead mechanistically to a radiation release due to fuel failures beyond those allowed in normal operation. Hence, the source term identified and applied outside containment is entirely hypothetical and would be a new design basis beyond the scope of current regulations.

J.3 ANALYTICAL METHODOLOGY

To develop the method used in the calculation of radiation doses, a review of all the postulated accident scenarios and system operations were performed. Source term assumptions were developed based on the results of accident analysis and system review, as well as the regulatory guidelines described in Section J.2.1. The systems and components inside the reactor building that have the potential of becoming contaminated during or following the accident were identified.

The following subsections describe these activities in greater detail. Section J.3.1 describes the accident scenario chosen for this analysis. Section J.3.2 identifies all the contaminated systems. Section J.3.3 describes the source term assumptions generated for each contaminated system. Section J.3.4 identifies the time period considered for this study.

J.3.1 ACCIDENT SCENARIO

The accident analyses consistent with FSAR Chapter 15 for small- and large-break loss-of-coolant accidents (LOCAs) were considered. The entire spectrum of LOCA conditions that could result in a degraded core configuration was reviewed and it was concluded that there is no single accident scenario that could result in a limiting radiation environment for all the safety-related equipment located in the reactor building. Therefore, the accident scenario chosen here is based on a nonmechanistic LOCA in which core damage is experienced at the beginning of the accident. Primary containment isolation is assumed to be achieved prior to radioactivity transport.

A review of the postaccident operation of the C1E/SRM (safety-related) systems was conducted. The result of this review indicated that the worst-case accident for the steam supply system (highest source term) was the pressurized reactor coolant system (RCS). For the liquid systems [the emergency core cooling system (ECCS), the residual heat removal (RHR), and the reactor core isolation cooling (RCIC) systems], as well as the primary containment atmosphere and primary containment atmosphere control (CAC) system, the worst-case accident is the depressurized reactor coolant system with the post-LOCA core release functions dispersed within the primary containment.

J.3.2 CONTAMINATED SYSTEMS

To perform the radiation dose calculations, it was necessary to identify the systems which would or could contain highly radioactive materials during the postaccident period. Systems required to operate during the postaccident period are as follows:

a. Systems necessary to mitigate the consequences of a large- or small-break LOCA,

b. Portions of systems that are in communication with systems containing radioactive liquids or gases, and

c. Defined by the NRC as being required, such as the gaseous radwaste system (see Section J.3.2.3).

J.3.2.1 Systems Included for Primary Containment Analysis

The following systems were considered:

a. High-pressure core spray (HPCS),

b. Low-pressure core spray (LPCS),

c. RHR,

d. RCIC,

e. Floor drains and equipment drains (FDR-EDR),

f. Reactor water cleanup (RWCU),

g. Main steam (MS),

h. Reactor recirculation (RRC),

i. Sample lines (PSR),

j. Automatic depressurization system (ADS), and

k. Low-pressure coolant injection (LPCI) function of the RHR system after depressurization.

J.3.2.2 Systems Included for Secondary Containment Analysis

The following systems were considered:

a. RCIC,
b. RHR,
c. LPCI,
d. LPCS,
e. HPCS,
f. MS, up to second isolation valve,

g. MS line isolation valve-leakage control system (MSIV-LCS),
h. Primary containment,
i. Secondary containment atmosphere, and
j. Standby gas treatment (SGT).

The following systems were also considered due to their potential to affect isolation valves or extend the primary containment source terms into secondary containment.

a. Containment atmosphere monitoring (CMS),

b. Containment supply purge (CSP),

c. Containment exhaust purge (CEP),

d. Blank penetrations,

e. Personnel access doors into the wetwell and drywell,

f. Instrumentation penetrations, and

g. All post-LOCA inboard and outboard isolation valves and their connected piping sources.

J.3.2.3 Systems Excluded

All systems required to mitigate the consequences of an accident have been included. Of those systems recommended for consideration in regulatory documents, one system (gaseous radwaste) has been excluded.

The gaseous radwaste is isolated by the primary containment and reactor vessel isolation control system and will not receive contaminated gas unless operation is manually initiated. The Columbia Generating Station (CGS) operating and accident procedures do not take credit for nor anticipate using this system. Since CGS philosophy is based on containment of the core releases within the primary containment, this system will not be required and was, therefore, excluded from consideration.

J.3.3 SOURCE TERM ASSUMPTIONS

Regulatory requirements specify that source terms equivalent to those recommended in Regulatory Guides 1.3 and 1.7 and Standard Review Plan Section 15.6.5 be used in the LOCA accident analysis. Additional guidance is given in NUREG-0588 (Reference J.7-2) and NUREG-0737 (Reference J.7-5) and is documented in Section J.2.1. Source term assumptions were generated based on the review of the operation of the safety systems. Because a

nonmechanistic LOCA scenario was chosen for this analysis, the worst contaminated situation for the fluid contained within each system was conservatively assumed. Tables J.3-1, J.3-2, and J.3-3 list the assumptions involved in the distribution of fission products used in this analysis. These assumptions are consistent with the regulatory requirements discussed in Section J.2.1.

A review of the operation of each of the systems discussed in Section J.3.2 was also conducted. This review identified the source of contaminated fluid contained within each system postaccident. Using the source term assumptions discussed in Tables J.3-1, J.3-2, and J.3-3, together with the results of this system review, the limiting source term (activity divided by dilution factor) was determined for each system. Table J.3-4 is a summary of the system operations and source term assumptions developed for each contaminated system identified in Section J.3.2.

J.3.4 TIME PERIOD CONSIDERED FOR STUDY

All systems were conservatively assumed to become contaminated at the start of the accident and remain contaminated until the integrated radiation dose reached it asymptotic value. It was noted that the integrated dose becomes nearly asymptotic to a constant value beyond about 6 months. Therefore, 6 months is the time period chosen for accident dose qualification in this report.

Table J.3-1

Distribution of Fission Products in the Worst
Post-Loss-of-Coolant Accident Situation for Areas
Inside Containment Depressurized Reactor Coolant System

	Primary Containment [a] Air and Steam Space		Suppression Pool and Reactor Coolant System Water Volume	
Fission Products	Fraction [b]	Dilution Volume [c]	Fraction[b]	Dilution Volume [c]
Noble gases	100%	Drywell air plus	0%	Suppression pool water and RCS water volume
Halogens	50% [d,e]	Suppression pool	50%	
Particulates	0%	Air	1%	

[a] A uniform distribution between drywell and suppression pool atmosphere has been assumed.

[b] Expressed in percentage (%) of total core inventory at end-of-life conditions (1000 days at 3556 MWt).

[c] Represents the total volume in which the fraction of core fission products is assumed to be homogeneously mixed.

[d] In calculating the radiation dose at a particular location, it is not necessary to assume that all source distribution assumptions are conservative simultaneously. Instead, a set of mutually compatible assumptions will be used which gives the maximum dose for the location being considered. The post-LOCA source contributors are used to calculate independent doses for each contributor. The worst dose is tabulated for that system rather than the sum of all contributors (i.e., 50% halogens airborne and 50% halogens in the water). Thus double counting of the fission product fractions is eliminated.

[e] First order iodine plateout occurs during the first 5-6 hr of the post-LOCA time frame when the elemental halogen concentration is reduced by a factor of 200. This methodology is in accordance with NUREG/CR-0009. Of the halogens released, 95.5% is available for plateout. Virtually all of the available halogens plateout within the initial 5 hr after the accident (0.5% remain airborne).

Table J.3-2

Distribution of Fission Products in the Worst
Post-Loss-of-Coolant Accident Situation for Areas
Inside Containment Pressurized Reactor Coolant System[a]

	Drywell Air Space[a]	Suppression Pool Water Volume and Air Space[a]	Reactor Coolant System Water Volume[a]		Reactor Coolant System Steam Space[a]	
Fission products	Fraction[b]	Fraction[b]	Fraction[b]	Dilution Volume[c]	Fraction[b]	Dilution Volume[c]
Noble gases	0%	0%	100%[d]	RCS water volume[e]	100%[e]	Normal RCS steam space[f]
Halogens	0%	0%	50%[g]		25%	
Particulates	0%	0%	1%		0%	

[a] The reactor coolant system will remain pressurized for a short period of time (17 hr) and then will be depressurized.

[b] Expressed in percentage (%) of total core inventory at end-of-life conditions (1000 days at 3556 MWt).

[c] Represents the total volume in which the fraction of core fission products is assumed to be homogeneously mixed.

[d] The 100% of noble gases, present during the 17 hr of the pressurized RCS during a LOCA, are homogeneously mixed in the water and steam dilution volumes identified.

[e] The dilution volume is the RCS water volume plus the RWCU lines up to the isolation valves, RHR lines to the isolation valves, and the RRC lines during the 17 hr of the pressurized RCS scenario.

[f] The dilution volume is the normal RCS steam space plus the MS lines up to the isolation valves during the 17 hr of the pressurized RCS scenario.

[g] In calculating the radiation dose at a particular location, it is not necessary to assume that all source distribution assumptions are conservative simultaneously. Instead, a set of mutually compatible assumptions will be used which gives the maximum dose for the location being considered. The post-LOCA source contributors are used to calculate independent doses for each contributor. The worst dose is tabulated for that system rather than the sum of all contributors (i.e., 50% halogens airborne and 50% halogens in the water). Thus double counting of the fission product fractions is eliminated.

Table J.3-3

Distribution of Fission Products in the Worst
Post-Loss-of-Coolant Accident Situation
for Areas Outside Containment

	Primary Containment Air Space		Suppression Pool Water Volume		Reactor Coolant System Steam Space[a]		Reactor Coolant System Water Volume[a]	
Fission Products	Fraction[b]	Dilution Volume[c]	Fraction[b]	Dilution Volume[c]	Fraction[b]	Dilution Volume[c]	Fraction[b]	Dilution Volume[c]
Noble gases	100%	Drywell	0%	Suppression pool water plus RCS water	100%	Normal	100%	RCS
Halogens	50%[d]	Air plus	50%[e]		25%	RCS	50%	Water
Particulates	0%	Suppression pool air	1%		0%	Steam space	1%	Volume

[a] Based on pressurized reactor coolant system.

[b] Expressed in percentage (%) of total core at end-of-life conditions (1000 days at 3556 MWt).

[c] Represents the total volume in which the fraction of core fission products is assumed to be homogeneously mixed.

[d] 95% of the halogens released from the core are assumed to plateout within approximately 5 hr as allowed by NUREG/CR-0009. The plateout dose was considered in the total calculation of radiation dose to equipment inside primary containment.

[e] In calculating the radiation dose at a particular location, it is not necessary to assume that all source distribution assumptions are simultaneously conservative. Instead, a set of mutually compatible assumptions will be used which gives the maximum dose for the location being considered. The post-LOCA source contributions are used to calculate independent doses for each contributor. The worst dose is tabulated for that system rather than the sum of total contributors (i.e., 50% halogens airborne and 50% halogens in the water). Thus double counting of the fission of product fractions is eliminated.

Table J.3-4

System Operation and Source Term Assumptions

System	Operation Postaccident	Contaminated Space	Source Term Assumptions
HPCS	Suction from condensate storage tank and/or suppression pool and discharge to the reactor vessel.	Suppression pool	(1)
LPCS	Suction from suppression pool and discharge to the reactor vessel.	Suppression pool	(1)
LPCI	Suction from suppression pool and discharge to the core.	Suppression pool	(1)
(6) RCIC steam system	Steam bleed-off from reactor steam space is used to drive the RCIC turbine, and exhausts into the suppression pool.	RCS steam space	(2)
RCIC liquid system	Suction from condensate storage tank or suppression pool and discharge to the reactor vessel.	Suppression pool	(1)
RHR system	(1) Shutdown cooling mode - suction from reactor recirculation system suction line and discharge into the reactor recirculation discharge line.	RCS liquid space	Note a
	(2) Alternate shutdown cooling mode - suction from suppression pool and discharge to core recirculates and cools the water in the suppression pool.	Suppression pool	(1) Note b
	(3) Containment spray cooling mode - suction from suppression pool and discharge into the drywell and suppression pool.	Suppression pool	(1)
	(4) Reactor steam condensing mode.	System mode deleted from plant	

Table J.3-4

System Operation and Source Term Assumptions (Continued)

System	Operation Postaccident	Contaminated Space	Source Term Assumptions
Main steam supply (MS)	Stagnant steam from the reactor vessel terminates at the second MSIV.	RCS steam space	(2)
MSIV-LCS (MSLC)	Steam bleed-off from main steam line, diluted, and discharged into the SGTS.	RCS steam space	(2) Note c
SGT filters (SGTS)	Process the halogens from primary containment leakage and MSIV-LCS.	Primary containment and secondary containment atmosphere	(3)
Primary containment (PCN)	Primary containment is isolated postaccident.	Primary containment atmosphere	(4)
Suppression pool	The primary function of the suppression pool is to contain and condense the blowdown from the RCS postaccident.	Suppression pool liquid	(1)
Secondary containment (SCN)	The primary function of the secondary containment is to contain all the leakage from the primary containment postaccident.	Primary containment atmosphere	(5)
Sample lines	Actuated to obtain primary containment atmosphere samples per NUREG-0737 (Reference J.7-5).	Primary containment atmosphere	(2)
Sample lines	Actuated to obtain liquid samples per NUREG-0737.	RCS liquid space	(1)
Reactor water cleanup (RWCU)	Reactor water cleanup system isolated during post-LOCA. Liquid up to the second isolation valve is considered contaminated.	RCS liquid	(1)
Reactor recirculation (RRC)	Suction from RRC system suction line and discharge into the reactor recirculation discharge line.	RRC liquid; RCS liquid	(1)
Floor drains and equipment drains (FDR/EDR)	Liquid from ruptured pipes or leaky seals discharged into the suppression pool.	RCS liquid	(1)

Table J.3-4

System Operation and Source Term Assumptions (Continued)

System	Operation Postaccident	Contaminated Space	Source Term Assumptions
Automatic depressurization system (ADS)	Automatic or manual depressurization of the reactor vessel by blowdown of the RCS into the suppression pool.	RCS steam	(2)
Automatic depressurization system (ADS)	Alternate shutdown cooling mode with reflood of reactor vessel and discharge into suppression pool.	Suppression pool	(1)
Containment monitoring system (CMS)	Continues to monitor primary containment atmosphere conditions.	Isolation of primary containment into secondary containment	(4)
Containment supply purge (CSP)	Isolated - no action required.	Isolation of primary containment into secondary containment	(4)
Containment exhaust purge (CEP)	Isolated - no action required.	Isolation of primary containment into secondary containment	(4)
Blank penetrations	None	Isolation of primary containment into secondary containment	(4)
Personnel access doors to primary containment	None	Isolation of primary containment into secondary containment	(4)
Instrumentation penetrations	None	Isolation of primary containment into secondary containment	(4)
All post-LOCA inboard and outboard isolation valves	As defined per Columbia Generating Station system requirements post-LOCA	Isolation valves and their connected piping which extends into secondary containment	Note d

Source Term Assumptions

(1) 50% halogens and 1% solid fission products diluted with suppression pool water plus RCS water.

(2) 100% noble gases and 25% halogens diluted with the RCS steam space.

Table J.3-4

System Operation and Source Term Assumptions (Continued)

(3) 50% halogens leaked from the primary containment is assumed to be deposited in the SGT filters at the rate of 0.67% per day. See Section J.5.3.3.1 for justification. 100% noble gases pass through also but are not absorbed.

(4) 100% noble gases and 50% halogens diluted with the primary containment air space. First order iodine plateout (0-95% elemental iodine) inside primary containment was considered.

(5) Assumptions involved in the calculation of source terms for secondary containment atmosphere are discussed in Section J.5.3.2.1.

(6) Based on a pressurized reactor coolant system.

[a] According to accident mitigation procedures, this mode of operation is not used after a degraded core condition is identified.

[b] Full discussion of source term assumptions for alternate shutdown cooling are presented in Section J.5.3.3.1.

[c] For the portion of system after the distribution header, credit is taken for dilution by clean air. See Section J.5.3.3.1 for justification.

[d] For all isolated systems the source term for the isolation valves will be primary containment atmosphere unless the penetration is filled with water that remains during the post-LOCA scenario. All penetrations and their associated isolation valves which contain a flowing fluid during post-LOCA operations are analyzed with the post-LOCA source term of that flowing fluid.

J.4 ACCESS AND OCCUPANCY OF VITAL AREAS

NUREG-0578 initiated the requirement for a design review to identify the location of vital areas in which personnel occupancy may be unduly limited by the radiation fields during postaccident operations. It required that each licensee provide adequate access to vital areas through design changes, increased permanent or temporary shielding, or postaccident procedural controls. NUREG-0737 further makes the point that the purpose of this design review is to determine what actions can be taken over the short-term to reduce radiation levels and increase the capability of operators to control and mitigate the consequences of an accident.

This shielding evaluation includes the calculation of gamma dose rates at selected locations outside the reactor building due to radioactive sources inside. The radioactive source terms obtained from ORIGEN computer calculations coupled with recommendations from Regulatory Guide 1.109 were the basis for the assumptions used in evaluating vital areas and access routes outside the reactor building.

J.4.1 DOSE RATES OUTSIDE THE REACTOR BUILDING

An analysis was conducted to determine the dose rates at selected locations outside the reactor building for personnel access purposes. The radiation level in the various areas outside the reactor building is defined by the following three radioactive sources:

a. Direct gamma ray dose from radioactive piping located inside the reactor building and attenuated through the walls of the reactor building,

b. Gamma shine dose from airborne activity inside the reactor building, and

c. Gamma dose from airborne activity outside the reactor building.

Radiation levels outside the reactor building were determined by the zone dose method as discussed in Section J.5.4. Representative zones were chosen at selected locations outside the reactor building such as ground level outside the railroad bay, sampling room, etc. The worst point in a zone was chosen to be the point directly outside the reactor building wall, at a height of 6 ft above floor elevation, at a lateral point determined by inspection to receive the highest dose along that wall.

The zones outside the reactor building are indicated by the letters Y and Z in the various elevations. The shine dose contribution to areas outside the reactor building (Zones Y and Z) were included in the dose calculations shown in Figures J.6-11 through J.6-18.

Attachment J.H presents the methodology used to calculate the radiation doses for the various vital areas.

J.4.2 VITAL AREAS AND ACCESS ROUTES OUTSIDE THE REACTOR BUILDING

Radiation calculated for the access routes were based on the assumption that no individual would be in an access route longer than 30 minutes for the first 8 hr after the postulated LOCA before reaching the vital area of interest.

The assumption was also made that no individual would occupy an infrequent occupied vital area longer than 30 minutes for the first 8 hr after the postulated LOCA.

All integrated radiation doses calculated for time spent in the access routes and vital areas were less than the guidelines presented in NUREG-0737.

J.4.3 VITAL AREAS AND ACCESS ROUTES INSIDE THE REACTOR BUILDING

Analysis has been completed to take credit for a vital area in the reactor building railroad bay and on the west side of the 522-ft el. The analysis of reactor building zones is discussed in Section J.5.3. The access route to the reactor building is discussed in Sections J.4.1 and J.4.2. See Section J.6.3 for a description of the access to the 522-ft el. of the reactor building.

J.5 METHODS

Due to the large number of C1E/SRM components in primary containment, it was decided to calculate the worst point dose from each of the major sources in the drywell and wetwell, and then sum the doses for a conservative estimate of the total integrated dose.

The secondary containment radiation dose assessment portion of the shielding evaluation was initiated by dividing the reactor building into radiation zones. Because of the large number of radioactive piping and safety-related equipment in the building, the division of the various regions of the secondary containment into radiation zones permits a precise, detailed calculation of the total integrated dose at the "worst target" location. The methods for performing the calculations are discussed in detail in the following sections.

The radiation dose assessment of safety-related equipment outside of the reactor building was done by calculating the radiation dose of each vital area where safety-related equipment was located. The assumptions and methodology used to perform these calculations are discussed in detail in the following sections and in Attachment J.H.

J.5.1 THE USE OF COMPUTER CODES

The two computer codes used in the primary containment shielding evaluation were ORIGEN2 and QAD-CG. Descriptions of the two codes are found in References J.7-8, J.7-9, J.7-10, and J.7-17. ORIGEN2 was used to compute the radioactive source terms (inside containment) used by QAD-CG to calculate the radiation doses from piping and various pieces of equipment.

The three computer codes used in the original secondary containment radiation shielding review were ORIGEN, SCAP-BR, and QAD-P5A. Descriptions of the codes are found in References J.7-10, J.7-11, and J.7-18. ORIGEN computes the radioactive source terms used by QAD-P5A to compute the radiation from piping and other source configurations to pieces of equipment. SCAP-BR computes the radiation dose contribution to safety-related equipment in the reactor building from primary containment airborne radiation streaming through the bioshield wall penetrations.

ORIGEN and ORIGEN2 are fission product source term codes which solve the equations of radioactive growth and decay for large numbers of isotopes. The codes have been used to calculate the radioactivity of fission products and fuel materials that were assumed to be released from the reactor core during the postulated loss-of-coolant accident (LOCA) to become the primary containment source terms for the dose rate calculations. SCAP-BR is similar to QAD-CG with the added capability to determine the radiation dose contribution due to scattering.

J.5.2 SOURCE TERM DEVELOPMENT FOR PRIMARY CONTAINMENT

The radiation level at any given location inside the primary containment of Columbia Generating Station (CGS) following the postulated LOCA such as that described in Section J.3.1 is determined from the following major source contributors:

a. Gamma ray dose from airborne radioactive sources suspended in the drywell and wetwell inside primary containment (airborne gamma dose),

b. Gamma ray dose from piping and/or equipment containing contaminated fluids which are recirculated inside primary containment (direct gamma dose),

c. Gamma and beta ray dose from iodines plated out inside primary containment (iodine plateout), and

d. Beta ray dose emitted by airborne radioactive sources suspended in the drywell and wetwell inside primary containment (airborne beta dose).

The initial phase of this analysis was concerned with the determination of radioactive source terms for the liquids and gases inside primary containment. The ORIGEN2 computer code was used for this calculation. The fission product inventory at the end of fuel life (1000 days irradiation at a power level of 3556 MWt) was assumed to be available for release immediately following the accident. The release fractions and resulting concentrations of noble gases, halogens, and other fission products in the gaseous and liquid fluids were computed. A detailed description of the analysis including the assumptions used is provided in Attachment J.F.

J.5.3 SOURCE TERM DEVELOPMENT FOR SECONDARY CONTAINMENT

The radiation level at a given location inside the secondary containment of CGS following an accident such as that described in Section J.3.1 is defined by the following major source contributors:

a. Gamma ray dose from airborne radioactive sources inside secondary containment (airborne gamma dose),

b. Gamma ray dose from radioactive sources suspended in the drywell and the wetwell inside primary containment (containment shine dose),

c. Gamma ray dose from piping and/or equipment containing contaminated fluids which are recirculated inside the reactor building (direct gamma dose),

d. Beta ray dose emitted by airborne radioactive sources inside secondary containment (airborne beta dose), and

e. Gamma ray dose from liquid piping and airborne radioactive sources inside primary containment which stream through bioshield wall penetrations into secondary containment (bioshield penetration streaming dose).

The initial phase of this analysis was concerned with the definition of radioactive source terms for the liquid and gas containing systems. The ORIGEN computer code was used for this calculation. The fission products at the end of fuel life (1000 days irradiation at a power level of 3556 MWt) were assumed to be available for release immediately following the accident. The released fractions of noble gases, halogens, and other fission products to the gaseous and liquid sources were computed. Subsequent fission product depletion and daughter product generation were then calculated for 20 time periods, covering a total period of 1 year. A detailed description of the analysis, including the assumptions used, as well as results of the source terms, is found in Attachment J.B and Reference J.7-12.

J.5.3.1 Parametric Studies for Direct Piping Dose in Secondary Containment

The purpose of the parametric study was to identify the parameters which have a significant effect on the radiation dose rates inside secondary containment. The computer code QAD-P5A was used to develop a correlation scheme for the significant parameters such that a simplified procedure for calculating radiation dose rates for complex source and receptor geometries can be developed. The dose rate at a target distance of 8 ft radially outwards from the centerline of an 8-in. schedule 40 pipe, infinitely long (standard pipe), was first calculated and defined as the standard dose rate. The results of this parametric study were then correlated as a set of correction factors to the standard dose rate. A simplified procedure was developed to calculate the dose rates and cumulate doses for complicated source-target configurations by using these correction factors. The development of these correction factors and the result of the parametric study inside secondary containment is discussed in Attachment J.B.

J.5.3.2 Dose Rate and Cumulative Dose Calculation Procedure

The results of the source term calculations and those of the parametric study were used to generate and cumulate doses for complicated source target configurations inside secondary containment. The following steps were taken to define the radiation service conditions for the pieces of safety-related equipment:

a. Based on the accident scenarios, contaminated systems, and assumptions defined in Section J.3, the radioactive source terms for liquid-containing and gas-containing systems were developed;

b. Radiation zones were selected and the radiation zone boundaries were carefully defined based on shield wall locations, contaminated piping locations, and locations of safety-related C1E/SRM equipment;

c. The radiation environment in each secondary containment zone (zone dose) was calculated (see Attachment J.B for the procedure). A zone dose is the radiation dose (gamma) that bounds the magnitude of dose received by all the pieces of safety-related C1E/SRM equipment located within that zone;

d. The zone dose as calculated in step c was used, as a first cut, to qualify all the pieces of safety-related C1E/SRM equipment located within that zone; and

e. For the pieces of safety-related C1E/SRM equipment that could not be qualified for the conservative radiation environment calculated in step c, the integrated dose for that piece of equipment was redefined based on a more realistic and refined approach.

J.5.3.2.1 Calculation of Airborne Gamma Doses Inside Secondary Containment

The time-dependent post-LOCA activity levels as calculated by the ORIGEN computer code were used as input for the calculation of the airborne gamma dose rates and integrated doses inside the cubicles in the secondary containment. The assumptions used in this analysis are as follows:

a. Activity that leaks into the secondary containment is homogeneously mixed with the secondary containment atmosphere prior to its removal from the atmosphere through the standby gas treatment system (SGTS);

b. The SGTS flow rate of 2430 scfm was assumed to be the flow rate of the effluent air. This is equivalent to one reactor building air change per day;

c. Air that leaks out of the primary containment flows directly and totally into the secondary containment. Bypass leakage was not considered;

d. Geometric factors were used to convert the semi-infinite cloud gamma dose to a finite gamma dose; and

e. Primary containment leakage rate of 0.5 wt %/day was considered.

Justifications of the above assumptions are stated in Attachment J.B. The equations that were used for the gamma dose calculations are described in Attachment J.B. Primary containment airborne beta dose results are discussed in Attachment J.G.

J.5.3.2.2 Procedure for the Calculation of Radiation Zone Dose in Secondary Containment

As discussed previously, the gamma radiation level at a given location inside the secondary containment of CGS following a LOCA is determined for four types of radioactive source distributions:

a. Fission products suspended in the atmosphere of the secondary containment (airborne gamma dose),

b. Gamma irradiation from the primary containment (shine dose),

c. Direct gamma irradiation from the radioactive fluid contained inside recirculating pipes (direct dose), and

d. Gamma ray dose from liquid piping and airborne radioactive sources inside primary containment which stream through bioshield wall penetrations into secondary containment (bioshield penetration streaming dose).

The dose contributed by each of these sources is determined by the location of the equipment, the time-dependent distribution of the source, and the effects of shielding.

A step-by-step procedure for calculating radioactive zone doses is shown in Attachment J.C. The methods presented in that procedure make it possible to calculate the worst case gamma dose from the above-mentioned source contributors inside radiation zones of the secondary containment. In general, this procedure for determining zone doses consists of a correction factor method for calculating direct dose rates.

As discussed in Attachment J.B, the correction factor method for calculating dose rates provides a convenient and fairly precise way of determining direct dose rates due to generic pipe segments. For radioactive fluid contained within components of geometry other than generic pipe segments, such as residual heat removal (RHR) heat exchangers, SGTS filters, hydrogen recombiners, etc., special QAD-P5A computer modeling was performed to calculate the gamma dose contribution due to those systems. A brief description of the guidelines used in modeling special components is found in Attachment J.B.

An evaluation of beta dose is necessary for qualification of safety-related equipment that is beta sensitive and not adequately protected against beta radiation. The beta dose analysis for secondary containment is presented in Section J.5.5. Beta dose is discussed in more detail in Attachment J.D as related to secondary containment radiation contributors.

J.5.3.3 Calculation of Radiation Doses Due to Special Systems and Components Inside Secondary Containment

As discussed in Attachments J.B and J.C, the correction factor method for calculating gamma dose rates and integrated doses is involved with the application of the dose correction factors (pipe diameter, pipe length, and radial distance correction factors) to a standard dose rate curve. A standard dose is defined as the gamma radiation measured at a target distance of 8 ft and emitted by radioactive sources contained within the suppression pool liquid and recirculated within infinitely long 8-in. schedule 40 piping. The systems that contain such radioactive fluids are the reactor coolant system, high-pressure core spray, low-pressure core spray, and residual heat removal systems. Other systems which contain fluids of different source terms and dilutions are considered special sources. The systems that need to be considered for special sources are the following:

a. Standby gas treatment system filters,
b. Main steam system, and
c. Main steam isolation valve leakage control system (MSIV-LCS).

J.5.3.3.1 Source Term Assumptions in Secondary Containment

The assumptions for the calculations of source terms inside secondary containment for special source systems are listed as follows:

Standby Gas Treatment System Filters

a. The SGTS filters will be loaded by halogens at the rate of 0.67% primary containment free volume per day. This consists of 0.5% per day of primary containment leakage and 0.17% per day of leakage due to the MSIV-LCS system. No holdup of this activity in the secondary containment is assumed;

b. The released halogen fraction is 50% of the core halogen inventory. This halogen fraction is assumed to be composed of 95.5% elemental, 2% organic, and 2.5% particulate halogens; and

c. The particulate halogens are assumed to be homogeneously distributed within the prefilters and the particulate filters, while the elemental and organic halogens are assumed to be homogeneously distributed within the charcoal filters.

Assumption a is consistent with the assumptions used in the accident analysis (Reference J.7-13 and Section J.3.1).

Assumption b is the NRC recommended assumption for the distribution of halogen inventory (Reference J.7-14).

Assumption c is necessary because the time-dependent distribution of activity within a filter is unknown. The homogeneous assumption, therefore, is considered appropriate and conservative for zone dose assessment.

Containment Atmosphere Control System

The function of the CAC system was to process the primary containment atmosphere to remove oxygen after a LOCA accident. Therefore, this system was assumed to be filled with gaseous source containing 2.5% halogens and 100% noble gases diluted with the primary containment free volume, although it is now deactivated.

Main Steam System

The main steam lines are located inside and outside the primary containment; they include the main steam lines in the steam tunnel and the RCIC turbine supply and exhaust lines. The radioactive source term for this system is assumed to be composed of 100% noble gases and 25% halogens, distributed throughout the reactor coolant system (RCS) steam space.

Alternate (Suppression Pool) Shutdown Cooling

To prevent failure of the RHR pumps due to excessive radiation exposure, the alternate shutdown cooling mode is the only allowable mode for shutdown cooling once a degraded core condition has been identified.

A small pipe-break accident will take approximately 6 hr to depressurize from 1000 psi to 150 psi through automatic depressurization system (ADS) valve actuations. Once a degraded core is identified and the reactor is sufficiently depressurized, within 17 hr after the accident, the ADS valves actuation will be maintained to dilute the primary coolant source concentration with the suppression pool since the alternate shutdown cooling mode will be used for decay heat removal.

For the large pipe-break accident the primary coolant source concentration will be diluted by the water in the suppression pool due to blowdown of the vessel through the large break or automatic actuation of the ADS valves. Once the vessel has been depressurized the water level in the vessel will be maintained with the emergency core cooling system while decay heat is removed by suppression pool cooling.

Thus, in all degraded core scenarios the primary coolant is diluted with the suppression pool prior to initiating the suppression pool shutdown cooling mode.

Main Steam Isolation Valve Leakage Control System

The MSIV-LCS system is a vacuum-type system which collects leakage between and downstream of the closed isolation valves and then releases it to the atmosphere through the SGTS. Leakage through the valve stems (maximum leakage of 11.5 scfh as described in Reference J.7-15) is directed to a distribution header or low-pressure manifold where clean air is brought in to dilute the contaminated steam before exhausting to the SGTS filter unit at a rated flow rate of 50 scfm. Thus the source term in the portion of piping system before the distribution header is conservatively assumed to be the same as that of the main steam system. For the portion of the piping after the header, credit is taken for the dilution by the clean air. This assumption is consistent with that recommended in Reference J.7-16.

J.5.3.3.2 Secondary Containment Analysis Method

The correction factor method is used for the calculation of the direct dose contribution due to the piping systems described in Section J.5.3.3, with the exception of the SGTS filter system. A description of the analysis of the SGTS filter is documented in Attachment J.D. Generic piping dose rate and integrated dose (dose at a target distance of 8 ft away from the centerline of an infinitely long 8-in. schedule 40 pipe) for each system were developed using the source term assumptions discussed in Section J.5.3.1 and are shown in Attachment J.B. Parametric studies were also performed to investigate the variation of dose rates due to pipe diameter, pipe length, and target distance for pipe segments containing source terms. The gaseous source term correction factors derived as a result of this parametric study (described in Attachment J.B), together with the generic dose rate curves generated for each system, were used to calculate the direct gamma dose contribution on a target.

J.5.3.3.3 Calculation of Radiation Doses Inside Secondary Containment on Generic Mechanical Equipment

Table J.5-1 is a sample list of generic mechanical equipment that are on the safety-related equipment list. For conservatism, the direct dose on the containment pieces of generic mechanical equipment is assumed to be the fluid contact dose. Figure J.5-1 is an illustration of the point where the direct dose is calculated on a piping segment.

The secondary containment source term assumptions developed in Section J.5.3 are used for the calculation of radioactive source terms for different systems, and the fluid contact dose was calculated using QAD-P5A by following the guidelines set forth in Attachment J.C. Figures J.5-2 through J.5-3 are 6-month integrated fluid contact doses versus pipe diameter.

These curves are intended to give conservative, upper-bound direct gamma dose estimates for the qualification of the pieces of generic mechanical equipment and components in the various systems. To use these curves to calculate the direct doses on generic mechanical equipment, the following steps should be taken.

a. Identify the system on which the equipment or component is located,

b. Identify the diameter of the contaminated pipe on which the equipment is located, and

c. The 6-month integrated dose for that piece of equipment or component can be determined by reading the appropriate curve.

J.5.4 SOURCE TERM DEVELOPMENT FOR C1E/SRM EQUIPMENT OUTSIDE THE REACTOR BUILDING

The radiation level at any given location outside the reactor building following the postulated LOCA as described in Section J.3.1 is determined from the following major source contributors:

a. Direct gamma dose from radioactive piping located inside the reactor building and attenuated through the walls of the reactor building,

b. Gamma shine dose from airborne activity inside the reactor building, and

c. Gamma ray dose from airborne activity outside the reactor building.

A detailed description of the method of analysis, including the assumptions used, as well as results of the source terms is found in Attachment J.H.

J.5.5 METHODOLOGY OF BETA DOSE ANALYSIS

The finite source volume used for the beta dose analysis in secondary containment is a sphere surrounded by a shell of sufficient thickness to stop all outside beta particles from entering the source volume. This finite spherical source volume is conservative for any generalized source shape (the dose at the center of the sphere is higher than the dose at any point of any generalized source shape of equal total volume). A discussion of this beta analysis methodology is presented in Attachment J.D.

Table J.5-1

Generic Mechanical Equipment

Valve packing
Lubricants
Seals
Expansion joints
Pressure relief valve
Flow element
Rupture disk
Gasket material
Conductivity element
Valve
Strainers
Steam traps
Filters (piping)
Temperature elements
Tanks
Moisture separators
Evaporator
Heat exchanger
Air washer (scrubber)
Pumps

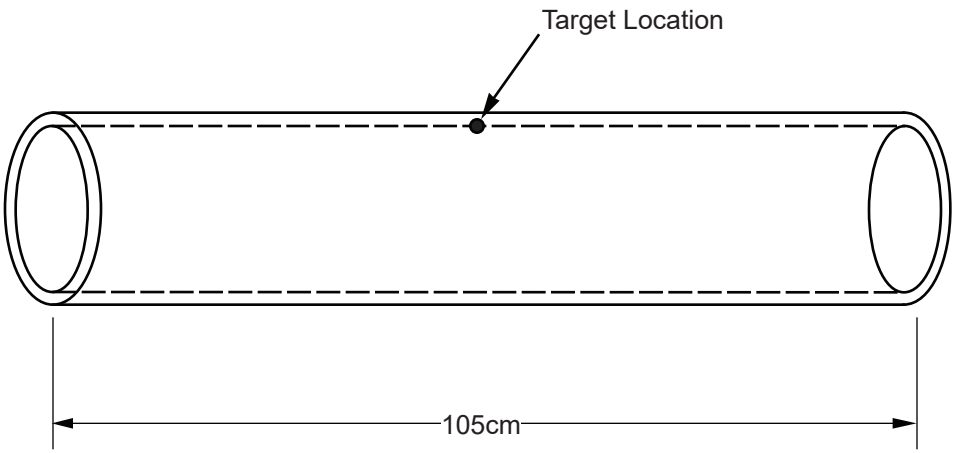

Columbia Generating Station
Final Safety Analysis Report

Dose Model Liquid Source

Draw. No. 970187.23	Rev.	Figure J.5-1

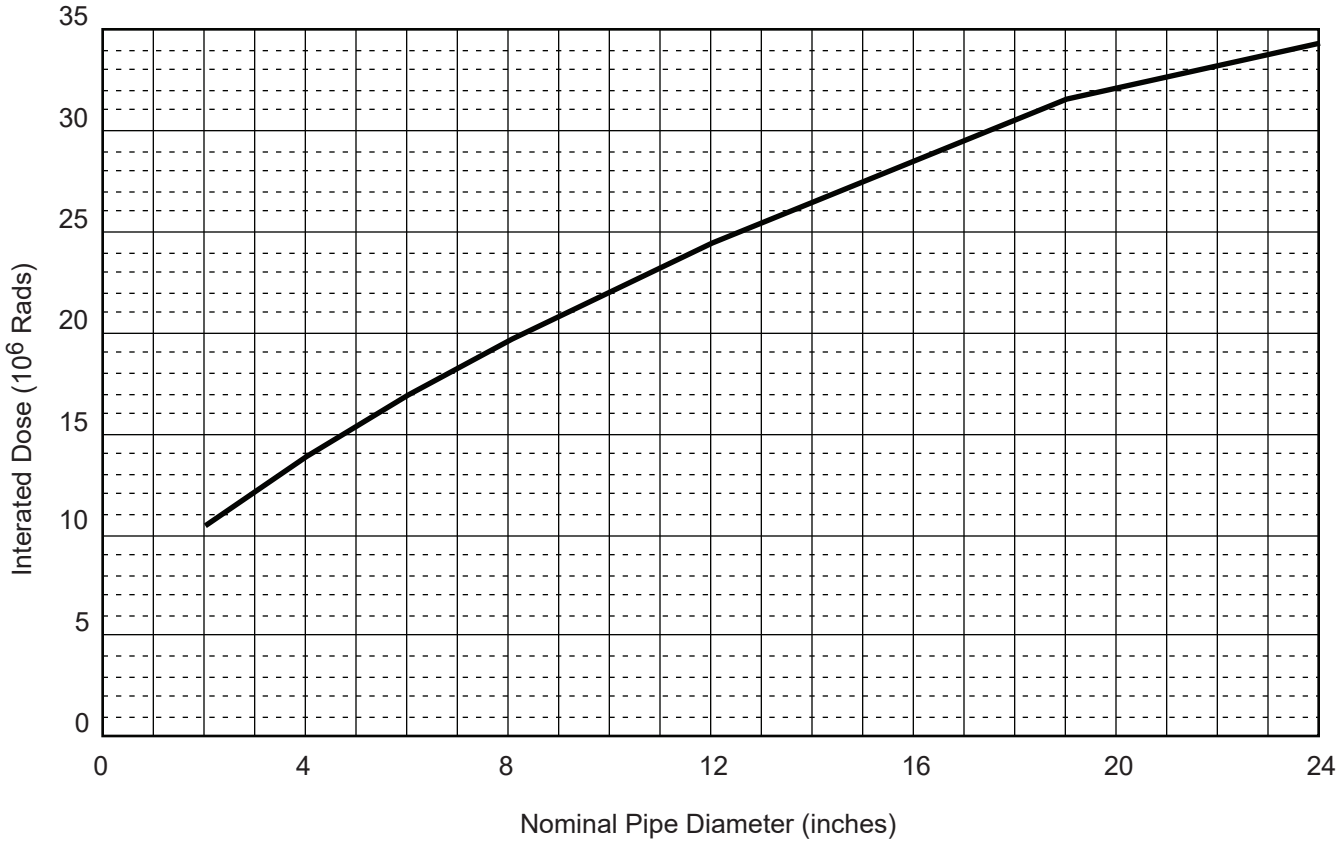

Columbia Generating Station Final Safety Analysis Report	**Sixth Month Integrated Fluid Contact Dose for MS, RCIC (Steam) System, and MSLC System Upstream of the Header**		
	Draw. No. 960222.63	Rev.	Figure J.5-2

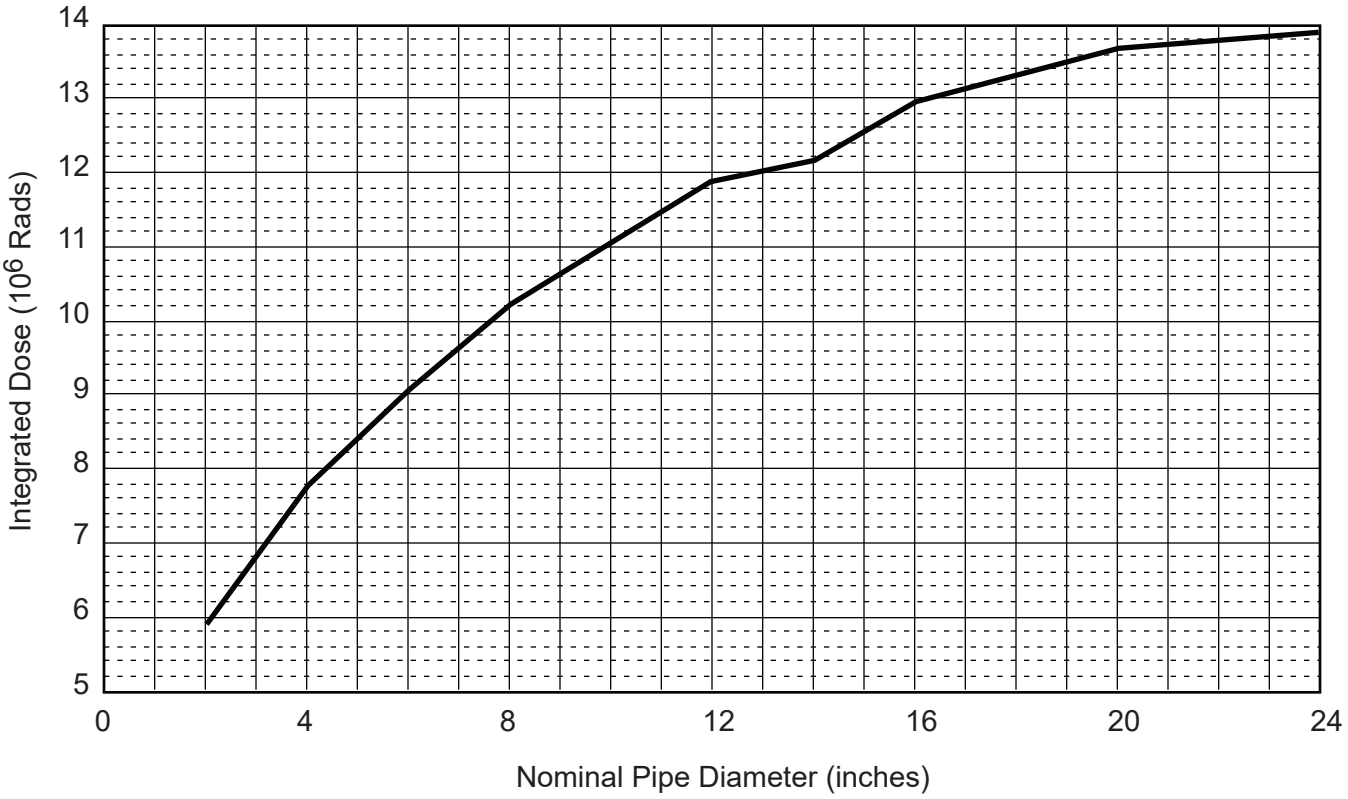

Columbia Generating Station Final Safety Analysis Report	Sixth Month Integrated Fluid Contact Dose for Pipes Containing Liquid Source Term (RHR, HPCS, LPCS, RCIC Liquid Systems)		
	Draw. No. 960222.61	Rev.	Figure J.5-3

J.6 RESULTS

All loss-of-coolant accident (LOCA) scenarios and accident conditions that could result in a limiting radiation environment for all the Columbia Generating Station (CGS) safety-related equipment on the C1E* list were reviewed and analyzed accordingly. Shielding (shield doors) was constructed for zones 522D, 572N, 572D, and 572H due to the radiation exposure of safety-related equipment in these zones.

In addition a shield wall was designed and installed on the southeast portion of the 501 ft el. against the bioshield wall to protect C1E* equipment from RRC piping radiation sources (normal operation) which stream through penetrations X-100A, X-105A, and X-100B.

The completeness of the safety-related equipment list has been verified. The safety-related equipment list contains all equipment required to "mitigate the consequences of an accident, bring the plant to safe shutdown conditions and provide long-term cooling capability."

Systems that could potentially contain radioactive material during and following the accident have been identified as listed in Sections J.3.2.1 and J.3.2.2.

The accident radiation doses indicated in Section J.6.1 and Table J.6-1 generated as a result of this analysis, are intended solely for the purpose of the qualification of safety-related equipment.

J.6.1 PRIMARY CONTAINMENT RADIATION RESULTS

Due to the large number of safety-related components it was deemed impractical to calculate the integrated dose to each piece of equipment. Therefore, the worst point dose from each of the major sources in the drywell and wetwell was calculated, and then summed for a conservative estimate of the total integrated dose. The dose sum of the worst-case source contributors in the drywell is 7.6×10^7 rads, but 7.4×10^7 rads is used as the worst-case dose for the equipment qualification program. All of the worst-case contributors cannot be present for a particular accident. Thus, the largest worst-case dose is calculated for the depressurized reactor coolant system. The worst-case dose is applied to safety-related equipment with an elevation within 5 ft of core midplane. Safety-related equipment in the drywell outside this elevation span is assigned a dose of 7.0×10^7 rads. In the wetwell, the maximum gamma dose above the suppression pool is 9.5×10^7 rads (see Section J.F.3 for discussion on photon energy and anticipated dose reduction of the above results). These results include the contributions from all major gamma sources within primary containment during normal operation as well as the 6-month period contribution following a postulated LOCA. Tables J.F-1 and J.F-2 give a breakdown of the integrated dose contribution from each of the

* Environmental qualification (EQ) of safety-related mechanical (SRM) equipment has been eliminated from the overall CGS EQ program.

major gamma sources to the drywell and the wetwell. The 40-year integrated gamma doses due to normal operation are taken from Reference J.7-20.

This methodology for determining a worst-case dose for equipment in the drywell is not valid for the region inside the sacrificial shield wall or under the reactor pressure vessel. A point-specific radiation dose calculation is required for all components present in either of these two regions.

Specific calculations have been performed for equipment that was evaluated individually for total integrated dose. Results of these calculations are summarized in Reference J.7-26.

In accordance with Section 1.4(8) of Reference J.7-2, only the gamma dose need be considered for "shielded components." Since beta radiation is so readily attenuated, virtually any enclosure of sensitive components will be sufficient to classify the component as "shielded." A review of all safety-related equipment located inside primary containment determined that most C1E* equipment is sufficiently shielded against beta radiation. Thus, the beta dose contribution is excluded from the total integrated radiation doses compiled for equipment qualification purposes unless a beta-sensitive component is not adequately protected from the airborne beta environment. When required to include beta dose contributions, a finite source volume is used. The source volume is a sphere surrounded by a shell of sufficient thickness to stop all beta particles from entering the source volume. This finite spherical source volume is conservative for any generalized source volume shape (the dose at the center of the sphere is higher than the dose at any point of any generalized source shape of equal total volume). A discussion of the results is presented in Attachment J.G.

J.6.2 SECONDARY CONTAINMENT RADIATION RESULTS

The integrated direct gamma dose (40 years and 6 months LOCA - direct gamma, gamma shine, and airborne gamma) was evaluated for the worst target of all C1E* equipment in each zone and is used for qualification of all the other C1E* equipment in that zone. The 40-year integrated gamma doses (Figures J.6-1 through J.6-10) are taken from References J.7-20 and J.7-21. The direct gamma dose contribution outside primary containment due to sources inside the primary containment was investigated. Safety-related equipment located in the direct shine path through the penetrations was evaluated in Reference J.7-23. All post-LOCA radiation dose contributions to safety-related equipment from streaming through the bioshield wall penetrations were included in the radiation doses. Evaluation of bioshield wall penetrations identified radiation dose problems associated with some of those penetrations (Reference J.7-24). The post-LOCA evaluation of safety-related equipment assumed the C1E* equipment was shielded for 40-year normal operations. To adequately protect C1E* equipment a concrete wall was designed and installed for penetrations X-100A, X-105A, and X-100B. The

* Environmental qualification (EQ) of safety-related mechanical (SRM) equipment has been eliminated from the overall CGS EQ program.

remaining penetrations evaluated (Reference J.7-25) were surveyed during plant startup to confirm radiation analysis calculations.

Airborne beta doses outside containment were evaluated in accordance with the methodology described in Section J.5.5 and Attachment J.D. The beta dose contribution is excluded from the total integrated radiation doses compiled for equipment qualification purposes unless a beta sensitive component is not adequately protected from the airborne beta environment.

J.6.3 RADIATION RESULTS IN THE VITAL AREAS AND ACCESS ROUTES

Figures J.6-8 through J.6-16 present the vital areas and access routes located outside the reactor building. Figures J.6-17 and J.6-18 present the vital areas and access routes located inside the reactor building. The doses indicated on each figure are also the 6-month LOCA integrated gamma doses to be used for C1E* (safety-related) equipment qualification purposes. Table J.6-1 also presents a summary of the 6-month LOCA integrated gamma doses on all C1E* equipment located in vital areas.

Figures J.6-17 and J.6-18 show the access route in the reactor building for operation of SW-V-75AA and SW-V-75BB, the manual isolation valves for the service water to fuel pool cooling makeup water supply.

Radiation levels of vital areas and access routes were determined at selected locations outside the reactor building due to radioactive sources inside the reactor building and release of radiation activity from the reactor building elevated vent. The vital areas and access routes analyzed are consistent with those discussed in NUREG-0737, Item II.B.2 (Reference J.7-5). The radiation levels determined for the vital areas and access routes identified in Figures J.6-8 through J.6-18 are summarized in Table J.6-1. All of the vital areas and access routes have radiation levels less than the guidelines presented in NUREG-0737.

The total dose received at a vital area during a post-LOCA scenario is obtained by summing the exposure dose enroute to the vital area and the radiation dose at the vital area. These doses are listed in Table J.6-2.

The analysis completed for vital areas and access routes assumed that except for the reactor building railroad bay and on the west side of the 522-ft el. there would be no access to equipment or areas located within the reactor building during the post-LOCA scenario. The exceptions are shown in Figures J.6-17 and J.6-18 and Table J.6-2. Access to the reactor building railroad bay for 3 hr is allowed to provide the ability to fill or exchange N_2 bottles. The entry to the west side of the 522-ft el. is to allow SW-V-75AA and/or SW-V-75BB to be opened (see Section 9.1.3.2.3). These valves are readily accessible and the entire opening

* Environmental qualification (EQ) of safety-related mechanical (SRM) equipment has been eliminated from the overall EQ program.

evolution for one of these valves would take 2.17 minutes and could be performed at 9.7 hr with the resulting exposure of 3.8 rem. Under worst-case conditions, at least one of these valves would need to be opened by 10 hr. Once a manual valve is opened, the spent fuel pool level can be controlled with the motor-operated valve from the main control room.

Table J.6-1

Six-Month Total Integrated Dose (Loss-of-Coolant Accident) to Areas Containing C1E Equipment Outside the Reactor Building

Vital Area Description	Radiation Level[a] Direct Gamma Shine + Airborne Gamma (rads)
Control room (el. 501 ft)	0.21
Technical support center	0.21
Sale area (el. 487 ft)	6.5
Nitrogen supply to ADS accumulators (el. 437 ft)	3.9
Standby service water pump valves	1.7
Remote shutdown room (el. 467 ft)	3.9
Switchgear room 1 (el. 467 ft)	3.9
Switchgear room 2 (el. 467 ft)	3.9
Radwaste control room (el. 467 ft)	3.9
Battery racks, dc battery chargers, two motor control centers (MCCs) (el. 467 ft)	3.9
Three MCCs and three switchgears (el. 437 ft)	3.9
Direct current battery charger and rack (el. 437 ft)	3.9
Diesel oil tanks (el. 437 ft)	3.9
Solid radwaste control panel and decontamination station control panel (el. 437 ft)	3.9

[a] Volume correction factors for a semi-infinite cloud were applied to the control room and technical support center. If the volume correction factors were to be applied to all areas, the integrated dose would be reduced by a minimum of fivefold.

Table J.6-2

Vital Areas and Access Route List of Radiation Exposure to Personnel During the Required Post-Loss-of-Coolant Accident Operations

Vital Area Description	Radiation Exposure		
	Gamma Whole Body (rem)	Thyroids (rem)[a)]	Beta Skin (rads)
Control room (el. 501 ft)[b]	0.21	0.21[c]	0.95
Technical support center[b]	0.21	0.21[c]	0.95
Security center[b]	3.1	13.4[d]	4.8
Auxiliary security center[b]	1.7		2.7
Sample analysis area (EOC)[b]	0.0013	-	-
Standby service water pump valves (cooling ponds)[e]	0.3	0.94[d]	0.46
All infrequently occupied vital areas inside the radwaste and diesel generator buildings[b]	0.13[f]	1.6[d]	0.48
Sampler for elevated release duct (roof turbine building)[e]	2.5	8.0[d]	3.8
Reactor building railroad bay (N_2 bottles)[g]	0.4	-	-
Reactor building 522-ft el. (SW-V-75AA and/or SW-V-75BB[h]	3.8	-	-
Postaccident sample area (el. 487 ft)[e]	0.36	3.2[d]	0.96
Access Routes			
All access routes inside the radwaste and diesel generator buildings[e]	0.13[f]	1.6[d]	0.48
All access routes[i] outside the radwaste and diesel generator buildings[e]	0.53	1.6[d]	0.8

Table J.6-2

Vital Areas and Access Route List of Radiation
Exposure to Personnel During the Required
Post-Loss-of-Coolant Accident Operations (Continued)

[a] If self-contained respiratory equipment (SCBA) is used, the thyroid dose will essentially equal the whole-body dose.

[b] Area of continuous occupancy.

[c] Assumes self-contained respiratory equipment was used by personnel during 0-3 hr post-LOCA situation.

[d] No respiratory equipment was assumed.

[e] Area occupied 0.5 hr at times after 1 hr into the LOCA.

[f] A volume correction factor for the semi-infinite cloud was included in the calculation.

[g] Assumes entry after 12 days post-LOCA for 3-hr occupancy with respiratory equipment for railroad bay portion of reactor building only.

[h] Assumes entry after 9.0 hr post-LOCA for a 2.17-minute evolution to open SW-V-75AA or SW-V-75BB with respiratory equipment and in full PC gear following access routes shown in Figures J.6-17 and J.6-18. The 2.17 minutes consists of a 1.83-minute transit (1.5 minutes in 522K and 0.33 minutes in 522H) and a 0.33-minute occupancy time in 522H.

[i] Extremely conservative analysis since the plume of airborne radioactivity cannot simultaneously cover all access routes.

J.7 REFERENCES

J.7-1 NUREG-0578, "TMI Lessons Learned Task Force Status Report and Short-Term Recommendations."

J.7-2 NUREG-0588, Rev. 1, "Interim Staff Position on Environmental Qualification of Safety-Related Electrical Equipment."

J.7-3 NUREG-0660, "NRC Action Plan Developed as a Result of the TMI-2 Accident."

J.7-4 Clarification letter to NUREG-0578, September 5, 1980.

J.7-5 NUREG-0737, "Clarification of TMI Action Plant Requirements."

J.7-6 IE Bulletin No. 79-01B, "Environmental Qualification of Class 1E Equipment."

J.7-7 Supplement No. 2 to IE Bulletin 79-01B, September 30, 1980.

J.7-8 Oak Ridge National Laboratory, "ORIGEN2, Isotope Generation and Depletion Code - Matrix Exponential Method," ORNL Report No. CCC-371.

J.7-9 J. F. Perkins, U.S. Army Missile Command, Redstone Arsenal, Alabama, Report No. RR-TR-63-11 (July, 1963).

J.7-10 Oak Ridge National Laboratory, "Modifications of the Point-Kernel QAD-P5A," ORNL-4181, July 1968.

J.7-11 Oak Ridge National Laboratory, "ORIGEN-79, Isotope Generation and Depletion Code - Matrix Exponential Method," ORNL Report No. CCC-217.

J.7-12 EDS Report No. 01-0740-1138, Revision 0, "Source Term Report," December 1980.

J.7-13 Columbia Generating Station FSAR, Section 15.6.5.5.1.1, Amendment 27, November 1982.

J.7-14 Regulatory Guide 1.3 "Assumptions Used for Evaluating the Potential Radiological Consequences of a Loss-of-Coolant Accident for Boiling Water Reactors," Revision 2, June 1974.

J.7-15 Columbia Generating Station FSAR, Sections 6.7.2 and 6.7.3.

J.7-16 Standard Review Plan, Section 15.6.5, "Loss of Coolant Accidents Resulting From Spectrum of Postulated Piping Breaks Within the Reactor Coolant Pressure Boundary."

J.7-17 Oak Ridge National Laboratory, "QAD-CG, A Combinitorial Geometry Version of QAD-P5A, A Point-Kernal Code," ORNL Report No. CCC-307.

J.7-18 Byoun, Yoon and Babel, Paul J., "Description of Computer Program (SCAP-BR)," User's Manual.

J.7-19 Impell Calculation #0740-004-019, "Fluid Contact Dose Calculation."

J.7-20 Letter BRWP-81-288, dated July 29, 1981, "Forty-Year Integrated Dose for Radiation Zones in the Reactor Building."

J.7-21 Letter BRWP-RO-81-181, dated September 29, 1981, "Forty-Year Integrated Dose for Radwaste and Turbine Buildings."

J.7-22 Burns and Roe calculation 5.01.78.

J.7-23 Burns and Roe calculation 5.01.030, "Total Accident Integrated Dose to Equipment in the Reactor Building From Primary Containment Penetration Streaming."

J.7-24 Letter BWRP-RO-82-186, dated June 18, 1982, "Bioshield Wall Penetrations with Unresolved Shielding Concerns."

J.7-25 Burns and Roe Technical Memorandum, TM-1295, "Bioshield Wall Penetration Shielding Requirements," dated April 6, 1983.

J.7-26 Calculation 1140-006-CLIST, "C1E/SRM Containment List."

J.7-27 Letter EDSWP-81-015, dated February 18, 1981, "SGTS Filter Modeling Assumption."

J.7-28 Murphy and Campe "Nuclear Power Plants Control Room Ventilation System Design," 13th AEC Air Cleaning Conference.

J.7-29 Letter EDSWP-80-031, "Shielding Design Input Data."

J.7-30 Theodore Rockwell III, "Reactor Shielding Design Manual," U.S. AEC, TID-7004, March 1956.

J.7-31 David A. Slade "Meteorology and Atomic Energy," U.S. AEC, July 1968.

J.7-32 Record of Conversation, D. A. Wert to J. A. Ogawa, dated September 22, 1980, "Shielding Source Term."

J.7-33 Letter BREDS-RO-81-17 dated December 11, 1981, A. N. Kugler to E. A. Daugherty.

J.7-34 NUREG/CR-009, Technical Basis for Models of Spray Washout of Airborne Contaminants in Containment Vessels, October 1978.

J.7-35 Columbia Generating Station FSAR, Amendment 11, Table 6.2-12.

J.7-36 Columbia Generating Station FSAR, Table 6.2-1.

J.7-37 Not used

J.7-38 EDS Nuclear Inc., Calculation 0740-004-004, Rev. 0.

J.7-39 EDS Nuclear Inc., Calculation 0740-004-006, Rev. 0.

J.7-40 Columbia Generating Station FSAR, Section 15.6.5.

J.7-41 Standard Review Plan, Section 6.5.3, "Fission Product Control Systems," Nuclear Regulatory Commission, June 1975.

J.7-42 Columbia Generating Station FSAR, Section 6.2, Table 6.2-2.

J.7-43 Columbia Generating Station FSAR, Section 6.2, Table 6.2-11.

J.7-44 WPBR-R0081-143, Holmberg to Forrest, "Plant Shielding Analysis - WNP-2," August 8, 1981.

J.7-45 Burns and Roe calculation 5.01.59, "Primary Containment 6 Month Accident Source Terms ORIGEN2."

J.7-46 Burns and Roe calculation 5.01.60, "Six Month Accident Integrated Dose in Primary Containment - Depressurized Case - QAD-CG."

J.7-47 Burns and Roe calculation 5.01.62, "Dose Rate for 26" Main Steam Lines Inside Primary Containment."

J.7-48 Burns and Roe calculation 5.01.63, "RWCU Piping Sources in Containment (Normal Operations)."

J.7-49 Burns and Roe calculation 5.01.64, "RWCU, RRC, and RHR Lines in Containment (Shielding - Normal Operation)."

J.7-50 Burns and Roe calculation 5.01.69, "Total Integrated Dose, Accident & Operation, from Systems and Primary Containment Atmosphere to Safety Related Equipment Located EDS - Pressurized Case."

J.7-51 Burns and Roe calculation 5.01.74, "Six Month Accident Integrated Dose in Primary Containment -Depressurized Case - QAD."

J.7-52 Burns and Roe calculation 5.01.75, "Accident Integrated Dose for Systems - Depressurized Case."

J.7-53 Burns and Roe calculation 5.01.76, "Total Integrated Dose, Accident & Operation, to Safety-Related Equipment in Containment Located by EDS Due to Systems."

J.7-54 Burns and Roe calculation 5.01.77, "Total Integrated Dose, Accident & Operation, from Systems and Primary Containment Atmosphere to Safety-Related Equipment in Containment Located by EDS - Depressurized Case."

J.7-55 Burns and Roe calculation 5.01.20, "WPPSS Sacrificial and Bioshield Calculations."

J.7-56 Burns and Roe calculation 5.45.07, "Post-LOCA MSIV Leakage Calculation."

J.7-57 Calculation 0740-004-VLIST, "Reactor Building SRM Active Valve, Pump, Fan, and Turbine List."

J.7-58 0740-073-001 Parameter Penetration Study.

J.7-59 Ianni, P. W., "Effectiveness of Core Standby Cooling Systems for General Electric Boiling Water Reactors," APED-5458, March 1968.

J.7-60 "Design and Performance of General Electric Boiling Water Reactor Main Steam Line Isolation Valves," APED-5750, General Electric Company, Atomic Power Equipment Department, March 1969.

J.7-61 "Power Uprate with Extended Load Line Limit Safety Analysis for WNP-2," NEDC-32141P, General Electric Company.

J.7-62 "General Evaluations of General Electric Boiling Water Reactor Power Uprate - Volume 1," NEDC-31984P, General Electric Company.

Attachment J.A

UNISOLATED LEAKING BUILDING PATH REPORT

A basic assumption to the plant shielding analysis is that the reactor isolates such that there is no radiation leakage path to the outside. A leakage path investigation was done verifying the above assumption. While performing this investigation, the total number of lines (69) penetrating the RB boundary, the associated system components and interface systems were reviewed.

The assumption eliminating the consideration of leakage is consistent with NUREG-0737, Clarification 2. This investigation assumed that containment isolation occurred prior to the egress of highly radioactive fluids. Additionally, it assumed that all safety-related equipment was available, and that all safety systems were pressurized. Therefore, at any interface, such as a heat exchanger, no potential leakage was considered if the nonradioactive system was at a higher pressure than the radioactive system. This investigation has not considered leakage from equipment seals, closed valves, or pipe rupture, except in the evaluation of the equipment and floor drain systems. The systems considered are tabulated by drawing number in Table J.A-1.

Table J.A-1

System Flow Diagrams Employed
to Perform The Review

Drawing Number	Revision	Drawing Number	Revision
M501	10	M536	12
M502	17	M537	25
M503	5	M538	9
M504	25	M539	28
M505	14	M540	15
M506	23	M541	13
M507	27	M542	4
M508	25	M543	17
M509	10	M544	10
M510	30	M545	15
M511	15	M546	10
M512	8	M547	9
M513	33	M548	14
M514	13B	M549	14A
M515	17C	M550	9
M516	20	M551	8
M517	25	M552	12
M518	14	M553	10
M519	18	M554	11
M520	15	M555	7
M521	20	M556	10
M522	6	M557	4
M523	29	M607 Sheet 1	7
M524	19	M607 Sheet 2	5
M525	19	M607 Sheet 3	3
M526	25		
M527	18		
M528	15		
M529	21		
M530	18		
M531	24		
M532	20		
M533 Sheet 1	1		
M533 Sheet 2	1		
M533 Sheet 3	1		
M534	16		
M535 Sheet 1	26		
M535 Sheet 2	21		

Attachment J.B

SOURCE TERM DEVELOPMENT AND PARAMETRIC STUDIES FOR SECONDARY CONTAINMENT

The major tools used in the development of source terms and parametric studies inside secondary containment were the ORIGEN and QAD-P5A computer codes. Descriptions of the codes are in References J.7-11 and J.7-10. ORIGEN was used to compute the activities and energies of fission products released from the reactor core. The output of ORIGEN [the time-dependent energies and activity of radioactive fission products following loss-of-coolant accident (LOCA)] was used as input to QAD-P5A to calculate the airborne, shine, and direct doses for standard geometrics as well as the basis of direct dose parametric studies.

J.B.1 RADIOACTIVE SOURCE TERMS IN SECONDARY CONTAINMENT

The ORIGEN computer code (Reference J.7-11) was used to calculate the radioactive source terms inside secondary containment for liquid-containing and gas-containing systems. The fission products at the end of fuel life were assumed to be available for release immediately following the accident. The concentrations of noble gases, halogens, and other fission products released to the gaseous and liquid sources were computed. Subsequent fission product decay and daughter product generation were then calculated for 20 time periods, covering a total period of 1 year.

The assumptions used in determining the initial distribution and leakage of radioactivity in the primary containment air and liquid space are as follows:

a. 100% of the noble gases and 50% of the halogens are distributed homogeneously within the primary containment free volume immediately following the postulated accident;

b. 50% of the halogens and 1% of the remaining fission products in the core are mixed instantaneously and homogeneously with the primary containment liquid space. The primary containment liquid space is defined as the sum of the suppression pool liquid and the reactor coolant system (RCS) liquid; and

c. The fission products available for release are defined as the total inventory generated in the equilibrium core after 1000 days at reactor power of 3556 MWt.

Assumptions a and b are NRC recommended assumptions for defining radioactivity release fractions for the qualification of safety-related equipment (Reference J.7-2) and are detailed in References J.7-32 and J.7-34.

Assumption c represents the maximum burnup level in the core and the fission products at the end of fuel life prior to radioactivity release and is conservative.

Table J.B-1 shows the gamma activity concentration at selected time periods for the liquid-containing system. The results of Table J.B-1 were used as input in the dose parametric study. Due to rapid decay of the high-energy isotopes, the average gamma energy for the gas-containing system varies from 0.8 MeV at the beginning of the accident to 0.3 MeV at 1 year after the accident.

J.B.2 AIRBORNE DOSE IN SECONDARY CONTAINMENT

The time-dependent post-LOCA activity levels as calculated by the ORIGEN computer code were used as input in the calculation of the airborne beta and gamma dose rates and integrated doses inside the cubicles in the secondary containment. The assumptions used in this analysis are as follows:

a. Activity that leaks into the secondary containment is homogeneously mixed with the secondary containment atmosphere prior to its removal from the atmosphere through the standby gas treatment system (SGTS). This is consistent with the NRC-recommended assumptions used for calculation of doses inside primary containment (Reference J.7-2 and J.7-34);

b. An SGTS flow rate of 2430 scfm was assumed to be the flow rate of the effluent air. This is the designed minimum accident flow rate (Reference J.7-35) based on one reactor building airchange per day;

c. Air that leaks out of the primary containment flows directly and totally into the secondary containment. Bypass leakage is not considered. This is conservative when considering dose in the secondary containment, since it maximizes the buildup of radioactivity in the secondary containment;

d. Geometric factors are used to convert the semi-infinite cloud gamma dose to a finite gamma dose. This assumption is used in Reference J.7-28, and is based on an average gamma ray energy of 0.733 MeV. The effect of time dependence of average gamma ray energies has been proven to be negligible; and

e. Primary containment activity leakage rate is 0.5%/day. This is consistent with the assumptions established in Reference J.7-29.

A model of the primary and secondary containment atmosphere is shown in Figure J.B-1. The activity concentration of a certain isotope inside the containment is changing due to the following three mechanisms:

a. Transport of activity due to air leakage,

b. Depletion of activity due to radioactive decay and plateout of elemental halogens inside primary containment, and

c. Increases in activity levels due to daughter product generation from fission product decay.

According to References J.7-2 and J.7-34, plateout may be modeled by an expotential removal process:

$$A(t) = A(0) \exp(-\lambda_p t)$$

Where λ_p is the removal constant due to plateout.

The first step in this calculation is to model the decay and transport of the airborne radionuclides.

General airborne activity balance in containment:

$$\frac{d}{dt}(C_{li}V_l) = \underbrace{-Q_l C_{l_i}}_{\text{leakage}} \quad \underbrace{-\lambda_i C_{li} V_l}_{\text{decay}} \quad \underbrace{-\lambda_{pi} C_{li} V_l}_{\text{plateout}} + \underbrace{\Sigma_j \lambda_j C_{lj} V_l}_{\text{growth}} \qquad \text{(J.B-1)}$$

where

C_{li} = concentration of isotope "i"
Q_l = leakage rate from primary containment
V_l = volume of primary containment
λ_i = radioactive decay constant of isotope "i"
λ_{pi} = plateout removal constant of isotope "i"

The term $\sum_j \lambda_j C_{l\,i} V_l$ reflects the growth of a given nuclide as the result of decay of parent nuclides.

The original release of nuclides consists only of halogens and noble gases. Since fission products are neutron-rich, decay of fission products proceeds toward higher atomic numbers.

In this manner, halogens will decay into noble gases, and then to higher atomic-numbered elements. Since the decay chain reaches a stable isotope after only a few decays, it can be seen that upon release of these airborne nuclides, the halogens have no significant airborne parent nuclides. This term may be neglected in the case of halogens.

Case 1 - Containment Halogens

Elemental iodine undergo plateout (Reference J.7-34) so equation (J.B-1) becomes:

$$\frac{d}{dt}(C_{1i} V_1) = -Q_1 C_{1i} - \lambda_i C_{1i} V_1 - \lambda_{pi} C_{1i} V_1 \qquad \text{(J.B-2)}$$

Solving (J.B-2) with the initial condition;

at $t = 0$,

$$C_{1i} = C_{1i}(0),$$

$$C_{1i}(t) = C_{1i}(0) \exp\left(-\left(\frac{Q_1}{V_1} + \lambda_i + \lambda_{pi}\right) t\right) \qquad \text{(J.B-3)}$$

Particulate and organic iodine are assumed unaffected by plateout (Reference J.7-34).

Equations (J.B-3) for particulate and organic iodine may then be shown to be

$$C_{1i}(t) = C_{1i}(0) \exp\left(-\left(\frac{Q_1}{V_1} + \lambda_i\right) t\right) \qquad \text{(J.B-4)}$$

One can note, at this point, that all three iodine species have factors of

$$C_{1i}(0) \exp(-\lambda_i t)$$

in the equations. This term may be defined as

$$S_i(t) = C_{1i}(0) \exp(-\lambda_i t) \; V_1 \qquad \text{(J.B-5)}$$

$S_i(t)$ is seen to be the total activity released into the system as a result of decay. $S_i(t)$ is independent of the transport of the nuclides. The following definitions will be made.

f_e = fraction of total iodine that are elemental
f_p = fraction of total iodine that are particulate
f_o = fraction of total iodine that are organic

Equations (J.B-3) and (J.B-4) can be combined to get

$$C_{1iH}(t) = \left[f_e \exp(-\lambda_p t) + (f_o + f_p)\right] \exp\left[-Q_1 t / V_1 \frac{S_{iH}(t)}{V_1}\right] \qquad \text{(J.B-6)}$$

where

$C_{1iH}(t)$ = total iodine concentration in primary containment
$S_{iH}(t)$ = total iodine activity
λ_p = plateout constant for elemental iodine

At this point, Reference J.7-2 allows only a factor of 200 reduction for elemental iodine plateout effects.

So when

$$\exp(-\lambda_p t) = \frac{1}{200}, \text{ then } \lambda_p \text{ becomes zero.} \qquad \text{(J.B-7)}$$

Defining: $t_p = \dfrac{\text{Ln}(200)}{\lambda_p}$

Equation (J.B-6) may be rewritten as

$$C_{1iH}(t) = \frac{S_{iH}(t)}{V_1} \exp\left[-Q_1 t / V_1\right] f_H(t) \qquad \text{(J.B-8)}$$

Where $f_H(t)$ is defined as

(a) $f_H(t) = f_e \exp(-\lambda_p t) + f_p + f_o \qquad t \le t_p$ (J.B-9)

(b) $f_H(t) = (f_e / 200) + f_p + f_o \qquad t \ge t_p$

Case 2 - Containment Noble Gases

Noble gases do not undergo plateout. Daughter products are also conservatively assumed to act as noble gases. Equation (J.B-1) for noble gases becomes

$$\frac{d}{dt}(C_{1i} V_1) = -Q_1 C_{1i} - \lambda_i C_{1i} V_1 + \sum_j \lambda_j C_{1j} V_1 \qquad \text{(J.B-10)}$$

Integrating equation (J.B-10) gives

$$C_{1i}(t) = \exp\left[-Q_1 t / V_1\right] \quad \exp\left[-\lambda_i t\right] \quad (B + f_i(t)) \qquad \text{(J.B-11)}$$

where

$$f_i(t) = \int \sum_j \lambda_j C_{ij} \quad \exp -\left[Q_1 / V_1 + \lambda i\right] dt \qquad \text{(J.B-12)}$$

and B is a constant to be determined.

All daughter products of plated-out iodine are conservatively assumed to be re-released into the containment atmosphere as if the iodine were airborne. For the first isotope in a series (no parent nuclide), $j = 0$ and $f_0(t) = 0$.

Since $C_{1j}(t)$ has the same form as $C_{1i}(t)$, equation (J.B-12) becomes

$$f_i(t) = \int \sum_j \lambda_j (B + f_j(t)) \; e^{(\lambda_i - \lambda_j)t} \, dt \qquad \text{(J.B-13)}$$

Equation (J.B-13) shows that the only dependence on Q_1/V_1 is that carried over from the parent isotope is $f_n(t)$. Since $f_0(t)$ is independent of Q_1/V_1, $f_i(t)$ is independent of Q_1/V_1. Equation (J.B-11) can thus be rewritten as

$$C_{1i}(t) = e^{-(Q_1/V_1)t} \; S_i(t) / V_1 \qquad \text{(J.B-14)}$$

where

$$S_i(t) = \exp\left[-\lambda_i t\right] \quad (B + f_i(t)) V_1 \qquad \text{(J.B-15)}$$

It can be seen that $S_i(t)$ is the solution to equation (J.B-10) without the leakage term. $S_i(t)$ is the activity for the total inventory of nuclides released from the reactor core. $S_i(t)$ values are determined by the use of ORIGEN. $S_i(t)$ includes radioactive decay and daughter product growth.

For a general airborne activity balance in the reactor building (secondary containment):

$$\frac{d}{dt}(C_{2i}V_2) = + Q_i C_{1i} - Q_2 C_{2i} - \lambda_i C_{2i} V_2 + \sum_j \lambda_j C_{2j} V_2 \qquad \text{(J.B-16)}$$

leakage in; leakage out; decay; growth

where

C_{2i} = concentration of isotope "i" in the reactor building
Q_2 = leakage rate from reactor building
V_2 = volume of the reactor building

Plateout inside secondary containment is conservatively neglected.

Case 3 - Iodine Inside the Reactor Building

As in Case 1, the growth term of equation (J.B-16) is negligible. Equation (J.B-16) can be integrated to give

$$C_{2i}(t) = e^{-(Q_2/V_2 + \lambda_i)t}\left[B + \frac{Q_1}{V_2}\int e^{(Q_2/V_2 + \lambda_i)t} C_{1i}(t)\, dt\right] \qquad \text{(J.B-17)}$$

From equation (J.B-8), $C_{1i}(t)$ is substituted into (J.B-17)

$$C_{2i}(t) = Be^{(Q_2/V_2 + \lambda_i)t} + \frac{Q_1}{V_2} e^{-(Q_2/V_2 + \lambda_i)t}\int \exp\,(Q_2/V_2 + \lambda_i)t$$

$$\left(\frac{S_{iH}(t)}{V_1} e^{-Q_1 t/V_1} f_H(t)\right) dt \qquad \text{(J.B-18)}$$

Substituting equation (J.B-5) into (J.B-18) results in

$$C_{2i}(t) = B\exp\left[-(Q_2/V_2 + \lambda_i)t\right] + \frac{Q_1}{V_2} C_{1i}(0) \exp -(Q_2/V_2 + \lambda_i)t \qquad \text{(J.B-19)}$$

$$\int \exp\left[(Q_2/V_2 - Q_1/V_1)t\right] f_H(t)\, dt$$

$f_H(t)$ is a complex function of time (equation J.B-9). $C_{2i}(t)$ must be solved in a series of solutions to equation (J.B-19).

For simplification, the following factors are defined

$$x = \frac{Q_2}{V_2} - \frac{Q_1}{V_1}$$

$$y = x - \lambda_p$$

Equation (J.B-19) becomes

$$C_{2i}(t) = B\exp -(Q_2/V_2 + \lambda_i)t + \frac{Q_1}{V_2 V_1} S_{iH}(t) \exp -(Q_2/V_2 + \lambda_i)t \int e^{xt} f_H^{(t)} dt \qquad \text{(J.B-20)}$$

Integrating (J.B-20) for $0 \le t \le t_p$ with the initial condition; $C_{2i}(0) = 0$ gives

(For $S_{iH}(t) = S_{iH}(0)\ e^{-\lambda_i t}$):

$$C_{2i}(t) = \frac{Q_1}{V_1 V_2} S_{iH}(t) \left(\exp\left[-Q_1 t/V_1\right] \left(\frac{f_e}{y} \exp\left[-\lambda_p t\right] + \frac{f_p + f_o}{x}\right) - e^{-Q_2 t/V_2} \left(\frac{f_e}{y} + \frac{f_p + f_o}{x}\right)\right) \qquad \text{(J.B-21)}$$

Defining

$$K_1 = \left(\frac{-f_e}{y} + \frac{f_p + f_o}{x}\right); \text{ (J.B-21) becomes (for } 0 \le t \le t_p\text{):} \qquad \text{(J.B-22)}$$

$$C_{2i}(t) = \frac{Q_1}{V_1 V_2} S_{iH}(t) \left(\left(\frac{f_e}{y} \exp\left[-\lambda_p t\right] + \frac{f_p + f_o}{x}\right) \exp\left[-Q_1 t/V_1\right] + K_1 \exp\left[-Q_2 t/V_2\right]\right)$$

And (for $t \ge t_p$): (J.B-23)

$$C_{2i}(t) = B\exp\left[-(Q_2/V_2 + \lambda_i)t\right] + \frac{Q_1}{V_1 V_2} S_{iH}(t) \exp\left[-Q_2/V_2 t\right] \int e^{xt} \left(\frac{f_e}{200} + f_p + f_o\right) dt$$

Solving (J.B-23) gives (J.B-24)

$$C_{2i}(t) = B\exp\left[-(Q_2/V_2+\lambda_i)t\right] + \frac{Q_1}{V_1V_2}S_{iH}(t)\exp\left[-Q_2/V_2 t\right] \left(\frac{f_e/200 + f_o + f_p}{x}\right)e^{xt}$$

At t = tp (from J.B-22)): (J.B-25)

$$C_{2i}(t_p) = \frac{Q_1}{V_1 V_2}S_{iH}(t_p)\left[K_1\exp\left[-(Q_2/V_2)t_p\right] + \left(\frac{f_e}{y}e^{-\lambda_p t_p} + \left(\frac{f_o + f_p}{x}\right)\right)\exp\left[-Q_1 t_p/V_1\right]\right]$$

By definition of t_p [eq. (J.B-7)]: $\exp\left[-\lambda_p t_p\right] = \frac{1}{200}$

Combining (J.B-24) and (J.B-25) at $t = t_p$ gives (J.B-26)

$$B\exp\left[-(Q_2/V_2+\lambda_i)t_p\right] = \frac{Q_1}{V_1V_2}S_{iH}(t_p)\exp\left[-(Q_2/V_2)t_p\right] \left(K_1 + \frac{f_e}{200}\left(\frac{1}{y}-\frac{1}{x}\right)e^{xt}p\right)$$

and

$$B = \frac{Q_1}{V_1V_2}S_{iH}(0)K_2 \quad \text{(J.B-27)}$$

where

$$K_2 = K_1 + \frac{f_e}{200}\left(\frac{1}{y}-\frac{1}{x}\right)e^{xt}p \quad \text{(J.B-28)}$$

So (J.B-24) becomes (for $t_p \le t$)

$$C_{2i}(t) = \frac{Q_1}{V_1V_2}S_{iH}(t)\left(K_2 e^{-Q_2 t/V_2} + \left(\frac{f_e/200 + f_o + f_p}{x}\right)e^{-Q_1 t/1}\right) \quad \text{(J.B-29)}$$

Equations (J.B-22) and (J.B-29) may be combined to form a general solution as follows:

$$C_{2i}(t) = S_{iH}(t)\ F_{2H}(t)/V_2 \quad \text{(J.B-30)}$$

where (for $0 \le t \le t_p$)

$$F_{2H}(t) = \frac{Q_1}{V_1}\left(K_1 \exp\left[-Q_2 t/V_2\right] + \left(\frac{f_e}{y}\exp\left[-\lambda_p t\right] + \frac{f_p + f_o}{x}\right)\exp\left[-Q_1 t/V_1\right]\right)$$

for ($t \ge t_p$) (J.B-31)

$$F_{2H}(t) = \frac{Q_1}{V_1}\left(K_2 \exp\left[-Q_2 t/V_2\right] + \left(\frac{f_e/200 + f_o + f_p}{x}\right)\exp\left[-Q_1 t/V_1\right]\right)$$

Case 4: Noble Gases Inside the Reactor Building

Equation (J.B-16) for noble gases may be rewritten as

$$\frac{d}{dt}(C_{2i}) - (Q_1/V_2)\ C_{1i} - (Q_2/V_2 + \lambda_i)\ C_{2i} + \sum_j \lambda_j C_{2j} \quad \text{(J.B-32)}$$

Integrating (J.B-32) gives (J.B-33)

$$C_{2i}(t)\exp\left[(Q_2/V_2 + \lambda_i)t\right] = B + \int \exp\left[(Q_2/V_2 + \lambda_i)t\right]\left(\frac{Q_1}{V_2}\ C_{1i}(t) + \sum_j \lambda_j C_{2j}(t)\right)\ dt$$

$C_{1i}(t)$ is found from equation (J.B-14) to be

$$C_{1i}(t) = \exp\left[-(Q_1/V_1)t\right]\ S_i(t)/V_1$$

$S_i(t)$ cannot be found analytically; hence equation (J.B-33) cannot be found analytically through this method. However, in deriving equation (J.B-14), it was shown that if all parent nuclides are transported identically, then the solution of equations consisting of transport and radioactive decay can be separated. Since the halogens are not transported in the same manner as noble gases, this is not strictly true. However, the assumption of daughter growth as if the halogens were transported will be conservative, due to the nonconsideration of the physical holdup in primary to secondary leakage of daughters of halogens.

Equation (J.B-14) may be rewritten as

$$V_1 C_{1i}(t) = S_{iN}(t)\ F_{1N}(t) \quad \text{(J.B-34)}$$

where

$$F_{1N}(t) = \exp[-Q_1 t/V_1] \qquad \text{(J.B-35)}$$

$S_{iN}(t)$ is the noble gas total activity term, as before. $F_{1N}(t)$ is the fraction of that activity remaining in primary containment.

Equation (J.B-16) may be modified to show the fractions of activity, rather than total isotopic activity, in secondary containment to give

$$\frac{d}{dt}(F_{2N}) = \frac{Q_1}{V_1} F_{1N} - \frac{Q_2}{V_2} F_{2N} \qquad \text{(J.B-36)}$$

Integrating equation (J.B-36) with initial conditions:

at $t=0$, $F_{2N} = 0$; gives

$$F_{2N}(t) = \frac{Q_1}{V_1 x} (\exp[-Q_1 t/V_1] - \exp[-Q_2 t/V_2]) \qquad \text{(J.B-37)}$$

$C_{2i}(t)$ is then found from

$$C_{2i}(t) = S_{iN}(t) F_{2N}(t)/V_2 \qquad \text{(J.B-38)}$$

λ_p is found in Reference J.7-2 to be determined

$$\lambda_p = K_g A_1/V_1 \qquad \text{(J.B-39)}$$

K_g is conservatively assumed to be equal to 0.05 cm/sec (Reference J.7-34).

A_1 is the surface area inside the drywell = $3.2 \times 10^7 cm^2$ (Reference J.7-33).

$V_1 = 5.68 \times 10^9 cm^3$ (Reference J.7-36)

$\lambda_p = 1.01\ hr^{-1}$

To calculate the airborne gamma dose rate inside the secondary containment, the method as described in Reference J.7-28 is used:

$$D_{\gamma\infty} = \sum_{i=1}^{n} 0.25 \overline{E}_\gamma i\ (C_{2i}\ \text{noble gas} + C_{2i}\ \text{halogen}) \qquad \text{(J.B-40)}$$

$$D_{\gamma} = \frac{D\gamma\infty}{GF} \qquad \text{(J.B-41)}$$

$$GF = \frac{1173}{V^{0.338}} \qquad \text{(J.B-42)}$$

where

$D_{\gamma\infty}$ = semi-infinite gamma cloud dose rate (rads/sec)

$\overline{E}\gamma_i$ = average gamma energy of the isotope (MeV)

C_{2i} = activity concentration inside secondary containment (Ci/m^3)

GF = geometric factor used to scale the semi-infinite gamma cloud dose to a finite cloud dose

V = volume of the finite cloud (ft^3)

By taking $S_i(t)$ from ORIGEN output and using equations (J.B-31) and (J.B-37) to calculate $F_2(t)$, the total gamma dose in secondary containment can be computed by using equations (J.B-40) through (J.B-42).

The airborne semi-infinite cloud gamma dose rates are shown in Figure J.B-2. As can be observed from the figures, the gamma doses inside secondary containment reach their peaks at around three days after the accident, and decay slowly thereafter due to the depletion of radioactivity by radioactive decay and removal through the SGTS.

The geometric factor in equation (J.B-42) is developed in Reference J.7-28 for average gamma energies of 0.733 MeV. There has been a concern that this geometric factor may vary appreciably with time due to the faster decay rate of the high energy isotopes. The average gamma energy during various time periods following the accident were computed and the results show that the average gamma energy varies from 0.3 MeV to 0.8 MeV. As discussed in Reference J.7-31, the geometric factor changes by less than 5% within that energy range. It is therefore concluded that the change in the geometric factors with time is negligible, and that equation (J.B-42) can be used to calculate the finite cloud gamma dose inside the secondary containment.

J.B.3 PARAMETRIC STUDIES FOR DIRECT PIPING DOSE

The purpose of the parametric study was to identify the parameters which have a significant affect on the radiation dose rates. The computer code QAD-P5A was used to develop a

correlation scheme for the significant parameters such that a simplified procedure for calculating radiation dose rates for complex source and receptor geometries can be developed. The dose rate at a target distance of 8 ft radially outwards from the centerline of an 8-in. schedule 40 pipe, infinitely long (standard pipe) was first calculated and defined as the standard dose rate. A parametric study was then performed to investigate the effects of the variation of parameters such as pipe length, pipe diameter, shield thickness, and target locations on the dose rate. The results of this parametric study were then correlated as a set of correction factors to the standard dose rate. A simplified procedure was developed to calculate the dose rates and cumulate doses for the multitude of source-target configurations by using these correction factors.

J.B.3.1 Functional Dependence of Various Parameters on Secondary Containment Dose Rates

The gamma ray energy flux from a line source "S_L" to a detector point "P" (see Figure J.B-3) is shown in Reference J.7-30 as

$$\phi = \frac{BS_L}{4\pi r} \int_0^{\theta 1} \exp - b_1 \operatorname{Sec} \theta_{d\theta} - \int^{\theta 2} \exp - b_1 \operatorname{Sec} \theta_{d\theta} \qquad \text{(J.B-43)}$$

where

ϕ = uncollided gamma ray flux (photons/cm^2 - sec)
b_1 = total attentuation through shield
S_L = source strength of line source (photons/cm sec)
B = buildup factor
θ = angle subtended by the length of the line source (see Figure J.B-3)

The source strength "S_L" is a function of the volume of liquid inside the pipe segments, which is also a function of the diameter and volume of the pipe. The angles "$\theta 1$" and "$\theta 2$" are also functions of "a/r" and "b/r," respectively (see Figure J.B-18 for definition of "a/r" and "b/r" respectively). Therefore, the functional dependence of gamma ray dose rates on the various parameters can be represented by the following equation:

$$\phi = \phi_o * F_D * F_R * F_L \left[(a/r, b_1) + F_L (b/r, b_1)\right] \qquad \text{(JB-44)}$$

where

ϕ_o = base gamma ray flux for standard pipe
F_D = pipe diameter correction factor
F_R = radial distance correction factor
F_L = (a/r, b_1) = pipe length correction factor

J.B.3.2 Parametric Study Procedures

The procedure for performing this parametric study is documented as follows:

a. Calculate the dose rate at a target distance of 8 ft from the centerline of an 8-in. schedule 40 pipe infinitely long (standard pipe);

b. Perform parametric studies on the variation of dose rates with

1. Radial distance from the pipe centerline,
2. Length of the pipe,
3. Nominal pipe diameter,
4. Time, and
5. Axial position along the pipe;

c. Correlate the results of the parametric study by a set of geometric correction factors;

d. Develop a procedure for calculating dose rates by using the correction factors; and

e. Verify the correlation scheme by calculating the dose rates at different target locations due to source piping of varied geometries through the use of QAD-P5A computer code, and compare the results to those obtained by using the procedure developed in step d.

J.B.3.3 Direct Dose Parametric Study Results Inside Secondary Containment

The standard pipe gamma dose rate and integrated dose curves for the different systems having different source term assumptions (defined in Section J.5.3.2) are shown in Figures J.B-4 through J.B-11. The various correction factors were calculated by the following correlation.

$$F_R(r) = \frac{\text{Dose rate at a radial distance "r" from an infinitely long 8-in. sch 40 pipe}}{\text{Dose rate at a radial distance of 8 ft from an infinitely long 8-in. sch 40 pipe}}$$

$$F_L(\ell) = \frac{\text{Dose rate at a radial distance of 8 ft from an 8-in. sch 40 pipe of length "2}\ell\text{"}}{\text{Dose rate at a radial distance of 8 ft from an infinitely long 8-in. sch 40 pipe}}$$

$$F_D(d) = \frac{\text{Dose rate at a radial distance of 8 ft from an infinitely long sch 40 pipe of nominal diameter "d"}}{\text{Dose rate at a radial distance of 8 ft from an infinitely long 8-in. sch 40 pipe}}$$

The above mentioned correction factors for liquid system source terms are shown in Figures J.B-12, J.B-13, and J.B-14. The correction factor curves for gaseous source terms are shown in Figures J.B-15, J.B-16, and J.B-17.

J.B.3.4 Correction Factor Method of Determining Direct Doses in Secondary Containment

Using the parametric curves from Section J.B.3.3, one obtains dose rates at varied radial distances (between 2 ft to 40 ft) from varied pipe diameters (between 2 in. to 24 in.) of varied lengths (between 2 ft to infinity) at any given time period within 1 year. The step-by-step procedure for calculating direct dose is as follows:

a. Identify a/r, b/r parameters and obtain pipe length correction factor F_L from Figure J.B-13 or J.B-16, depending on the system being considered. (See Figure J.B-18 for definition of "a/r" and "b/r");

b. Obtain the standard dose rate from the standard dose rate curve for time "t" desired;

c. Obtain the pipe diameter correction factor $F_D(d)$;

d. Obtain radial distance correction factor $F_R(r)$; and

e. The dose rate for the given pipe segment can be computed by

$$\text{Dose Rate} = (\text{Standard Dose Rate})\,(F_R)(F_D)(F_L).$$

Table J.B-2 compares the results for dose rate of 17 different pipe geometry and target locations as calculated using the correction factor method to those calculated by using the computer code QAD-P5A. It was observed that the biggest difference in results between the two methods is less than 10%. It is concluded that the correction factor method is adequate for calculating direct dose.

Table J.B-1

Gamma Energy Concentration (photons/sec-cm^3) in Liquid-Containing Systems

	Gamma Energy (MeV)											
Time	0.30	0.63	1.10	1.55	1.99	2.38	2.75	3.25	3.70	4.22	4.70	5.25
0 min	1.32E+09	7.25E+09	2.33E+09	1.63E+09	1.28E+08	1.00E+08	1.33E+08	3.61E+07	1.90E+07	2.82E+07	4.58E+07	3.39E+05
2 min	1.17E+09	7.17E+09	2.03E+09	6.17E+08	1.25E+08	4.54E+07	4.88E+07	2.42E+07	1.03E+07	7.17E+06	1.02E+07	2.10E+05
6 min	1.06E+09	6.92E+09	1.85E+09	5.63E+08	1.22E+08	1.99E+07	1.55E+07	1.62E+07	7.34E+06	8.50E+05	5.84E+05	8.09E+04
20 min	9.71E+08	6.21E+09	1.69E+09	5.00E+08	1.14E+08	1.30E+07	8.21E+06	9.17E+06	5.25E+06	2.03E+04	3.55E+03	2.86E+03
1 hr	8.84E+08	4.75E+09	1.41E+09	3.84E+08	1.01E+08	7.71E+06	3.36E+06	2.60E+06	2.17E+06	1.43E+00	3.66E-01	2.01E-01
3 hr	8.50E+08	2.65E+09	9.92E+08	2.28E+08	7.75E+07	2.77E+06	3.61E+05	3.74E+05	1.58E+05	3.26E-03	1.55E-03	9.71E-04
9 hr	9.04E+08	1.29E+09	5.00E+08	1.05E+08	3.88E+07	7.71E+05	9.04E+03	2.35E+04	6.17E+01	3.26E-03	1.55E-03	9.71E-04
1 day	8.09E+08	7.17E+08	1.39E+08	3.73E+07	8.84E+06	6.17E+05	1.30E+03	6.29E+01	5.17E-03	3.26E-03	1.54E-03	9.71E-04
3 days	5.54E+08	2.71E+08	1.79E+07	1.91E+07	9.34E+05	5.71E+05	1.10E+03	3.56E+01	5.17E-03	3.26E-03	1.54E-03	9.67E-04
9 days	3.16E+08	1.22E+08	4.58E+06	1.36E+07	5.71E+05	4.29E+05	1.09E+03	3.46E+01	5.13E-03	3.22E-03	1.53E-03	9.59E-04
30 days	5.42E+07	6.46E+07	1.73E+06	4.38E+06	2.67E+05	1.48E+05	1.05E+03	3.31E+01	4.96E-03	3.12E-03	1.48E-03	9.29E-04
60 days	8.17E+06	4.42E+07	9.29E+05	1.03E+06	1.49E+05	3.94E+04	9.92E+02	3.13E+01	4.71E-03	2.98E-03	1.41E-03	8.88E-04
90 days	3.99E+06	3.45E+07	7.13E+05	3.60E+05	1.14E+05	1.75E+04	9.38E+02	2.96E+01	4.54E-03	2.86E-03	1.35E-03	8.50E-04
120 days	3.25E+06	2.77E+07	6.25E+05	2.19E+05	1.00E+05	1.26E+04	8.88E+02	2.80E+01	4.38E-03	2.75E-03	1.30E-03	8.17E-04
150 days	2.90E+06	2.27E+07	5.79E+05	1.83E+05	9.17E+04	1.11E+04	8.38E+02	2.64E+01	4.21E-03	2.66E-03	1.26E-03	7.92E-04
180 days	2.64E+06	1.89E+07	5.42E+05	1.69E+05	8.50E+04	1.04E+04	7.92E+02	2.50E+01	4.08E-03	2.57E-03	1.22E-03	7.67E-04

Table J.B-2

Comparison of Direct Dose Rate Results

Target Location and Pipe Geometry					Dose Rate Results			
Pipe Diameter (cm)	Pipe Length (cm)	Target Location r (cm)	a (cm)	b (cm)	Time After Accident (hr)	Correction Factor Method (rad/hr)	Computer Results (rad/hr)	Difference (%)
6	800	548.6	570	230	24	52.7	53.3	-1.1
6	800	91.4	720	80	24	484	479	+1.0
6	800	1006.8	650	150	24	15.3	16.1	+5.0
8	800	548.6	570	230	24	77.0	80.4	-4.23
8	800	391.4	720	80	24	105.0	110.0	-4.5
8	800	1066.8	650	150	24	22.4	24.4	-8.2
2	700	100.0	600	100	720	5.36	5.32	0.75
2	700	1066.8	600	100	720	0.159	0.146	8.9
2	700	100	-900	1600	720	0.0126	0.0123	2.3
2	700	1066.8	200	900	720	0.128	0.124	3.2
12	400	1066.8	-400	800	720	1.14	1.21	-5.8
12	400	100	350	50	720	72.5	71.4	1.5
12	400	609.6	350	50	720	4.66	4.93	-5.5
12	400	1066.8	350	50	720	1.57	1.73	-9.3
10	600	304.8	-243.8	548.6	0.0333	554	539	2.7
10	600	121.9	450	150	0.0333	7617	7396	-3.0
10	600	1005.8	450	150	0.0333	258	280	-7.9

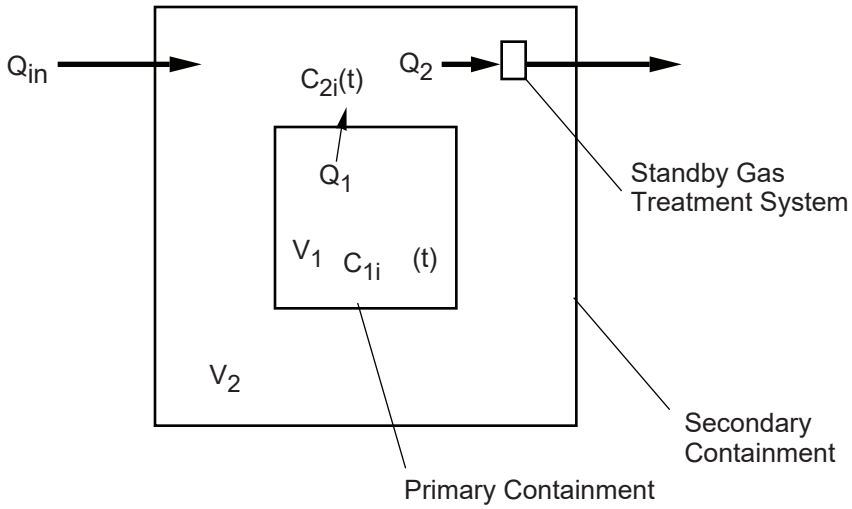

Q_2 = Air Leakage Rate from Secondary Containment (m^3/sec)
Q_1 = Air In-leakage Rate from Primary Containment (m^3/sec)
V_2 = Volume of Secondary Containment (m^3)
V_1 = Volume of Primary Containment (m^3)
i = Nuclide Index
$C_{2i}(t)$ = Activity Concentration in Secondary Containment (Ci/m^3)
$C_{1i}(t)$ = Activity Concentration in Primary Containment (Ci/m^3)
Q_{in} = Clean Air In-leakage Rate (m^3/sec)

Columbia Generating Station Final Safety Analysis Report	**Model of the Primary and Secondary Containment**		
	Draw. No. **970187.24**	Rev.	Figure **J.B-1**

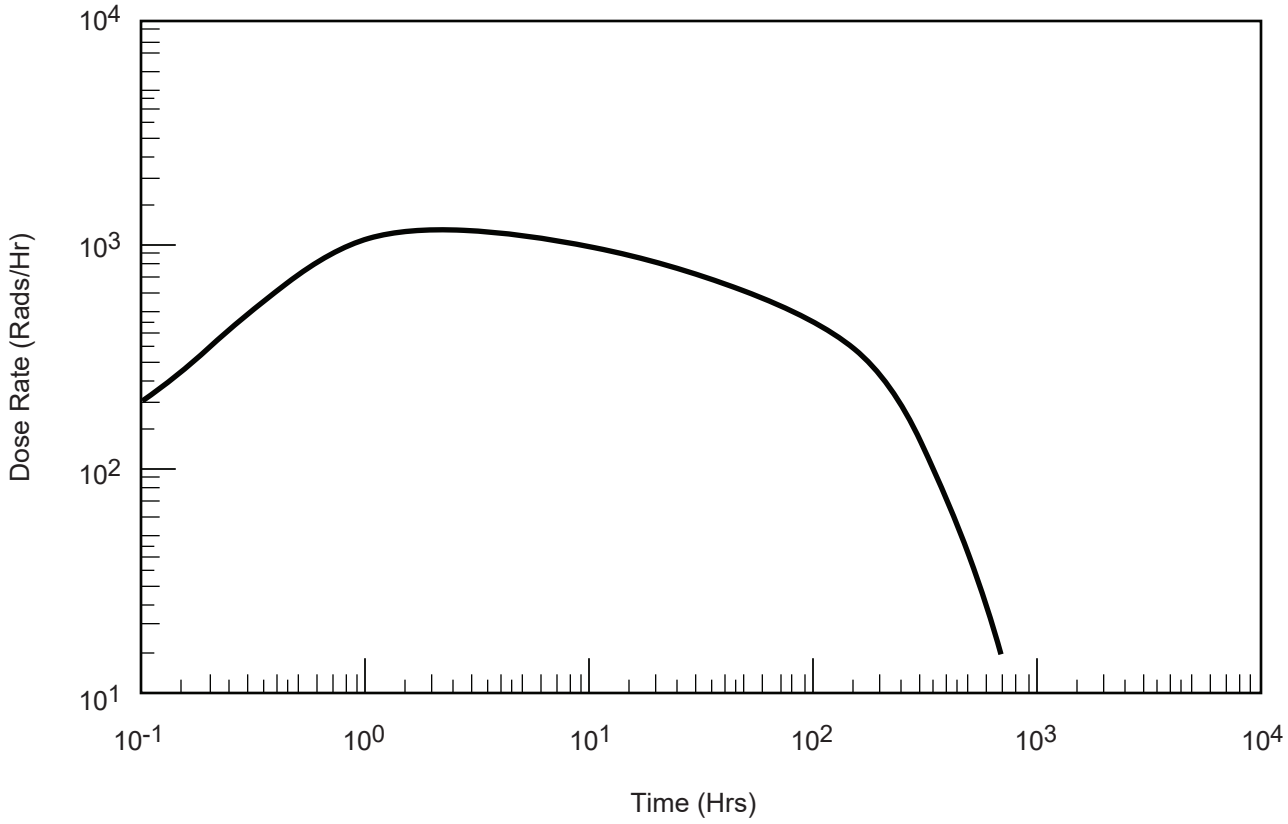

0.5%/Day Primary Containment Leakage Rate

Columbia Generating Station Final Safety Analysis Report	Time-Dependent Gamma Dose Rate for a Semi-Infinite Cloud of Fission Products at Secondary Containment Concentrations		
	Draw. No. 970187.25	Rev.	Figure J.B-2

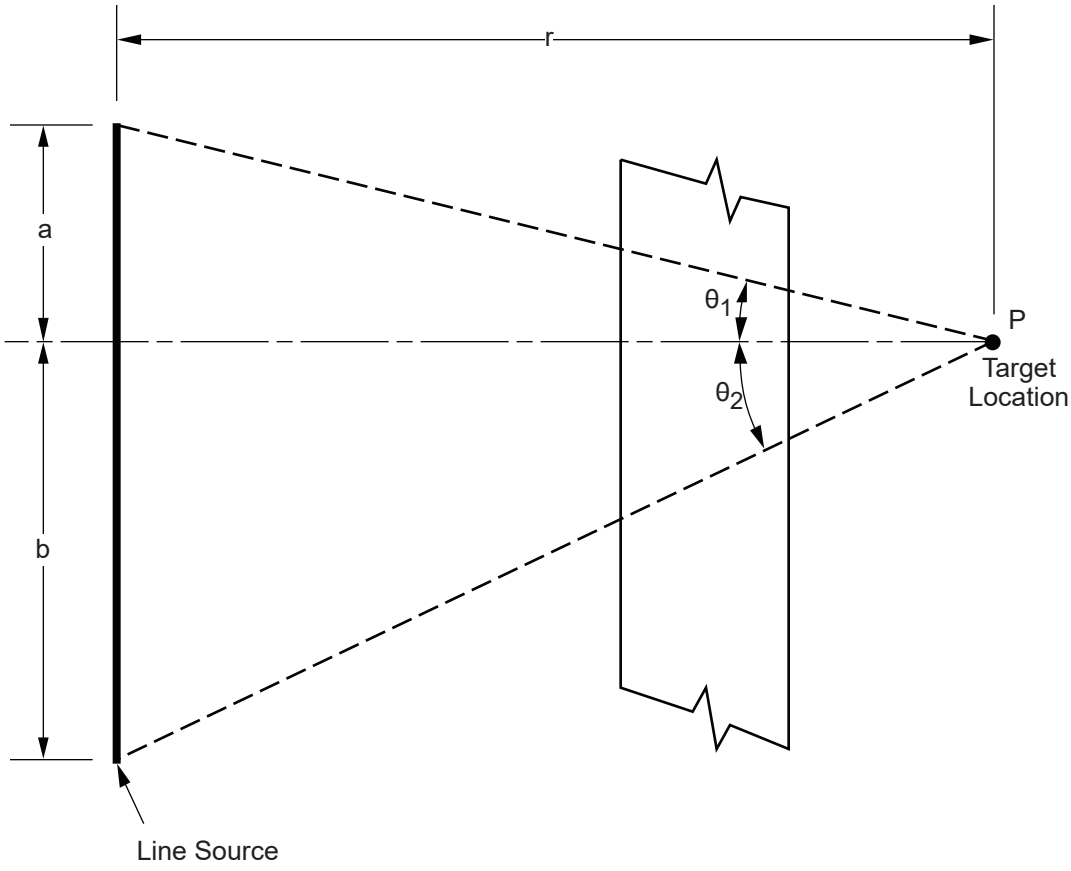

$$b_i = \sum_i \mu_i t_i$$

Columbia Generating Station Final Safety Analysis Report	Illustration of Parameters Used in the Shielding Equation		
	Draw. No. 970187.26	Rev.	Figure J.B-3

Form No. 960690

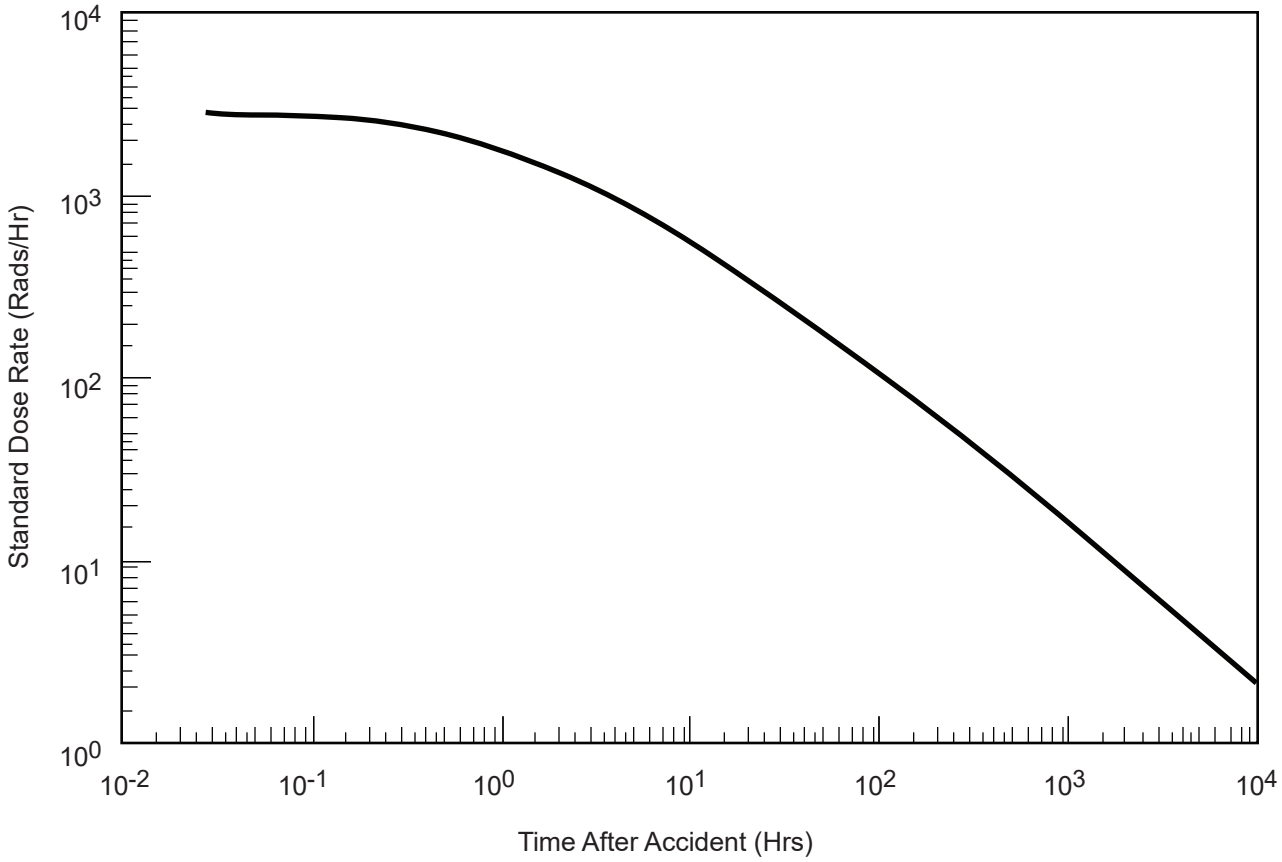

Columbia Generating Station Final Safety Analysis Report	Standard Gamma Dose Rate Curve for Liquid Containing Systems (RCIC Liquid System and RHR System)		
	Draw. No. 970187.27	Rev.	Figure J.B-4

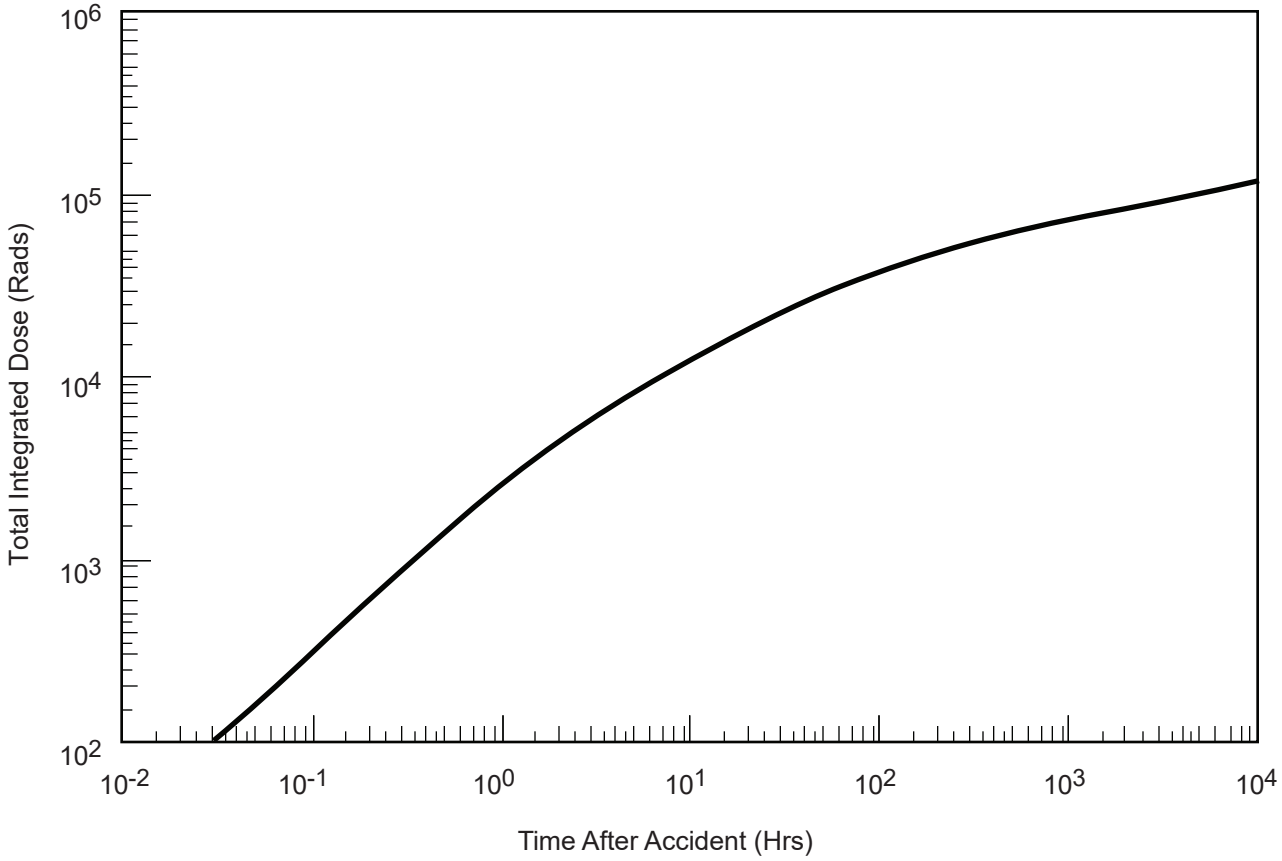

Columbia Generating Station Final Safety Analysis Report	Standard Integrated Gamma Dose Rate Curve for Pipes in Liquid Containing Systems (RCIC Liquid System and RHR System)		
	Draw. No. 970187.28	Rev.	Figure J.B-5

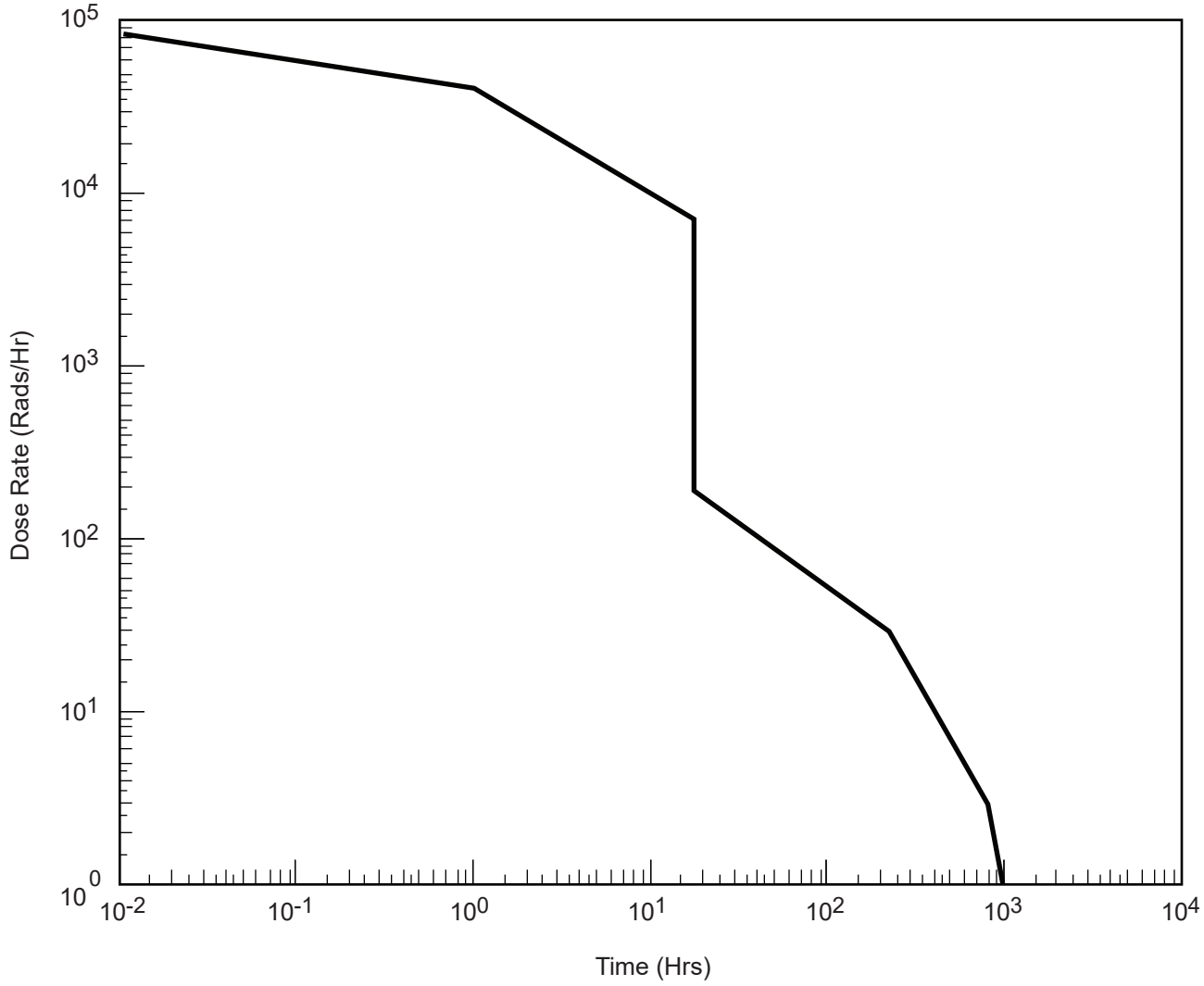

Columbia Generating Station Final Safety Analysis Report	Standard Gamma Dose Rate Curve for Pipes in the RCIC Steam System and MSIV-LCS Steam System Before the Header		
	Draw. No. 970187.29	Rev.	Figure J.B-6

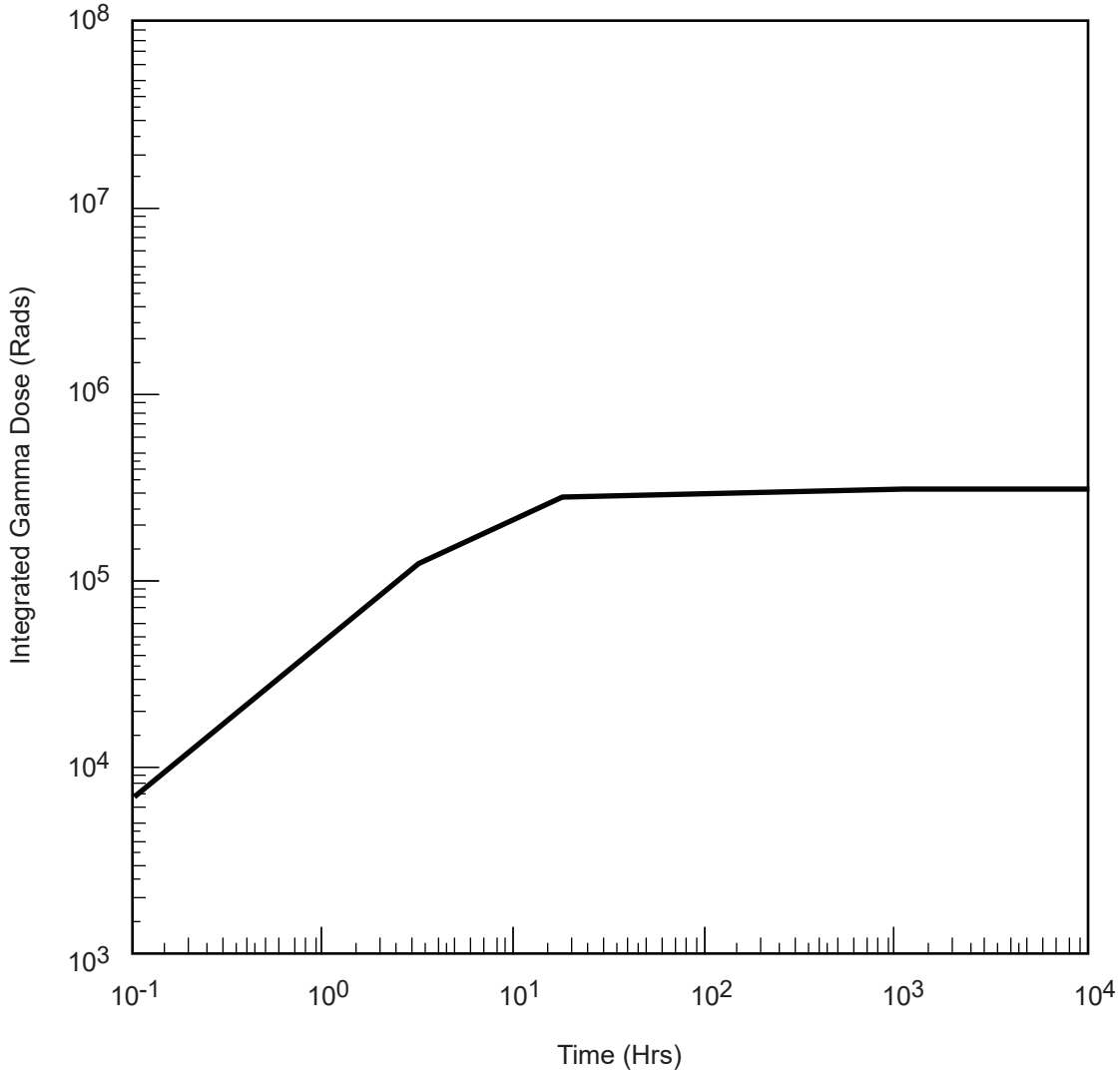

Columbia Generating Station Final Safety Analysis Report	Standard Integrated Gamma Dose Curve for Pipes in the RCIC Steam System and MSIV-LCS Steam System Before the Header		
	Draw. No. 970187.30	Rev.	Figure J.B-7

Form No. 960690

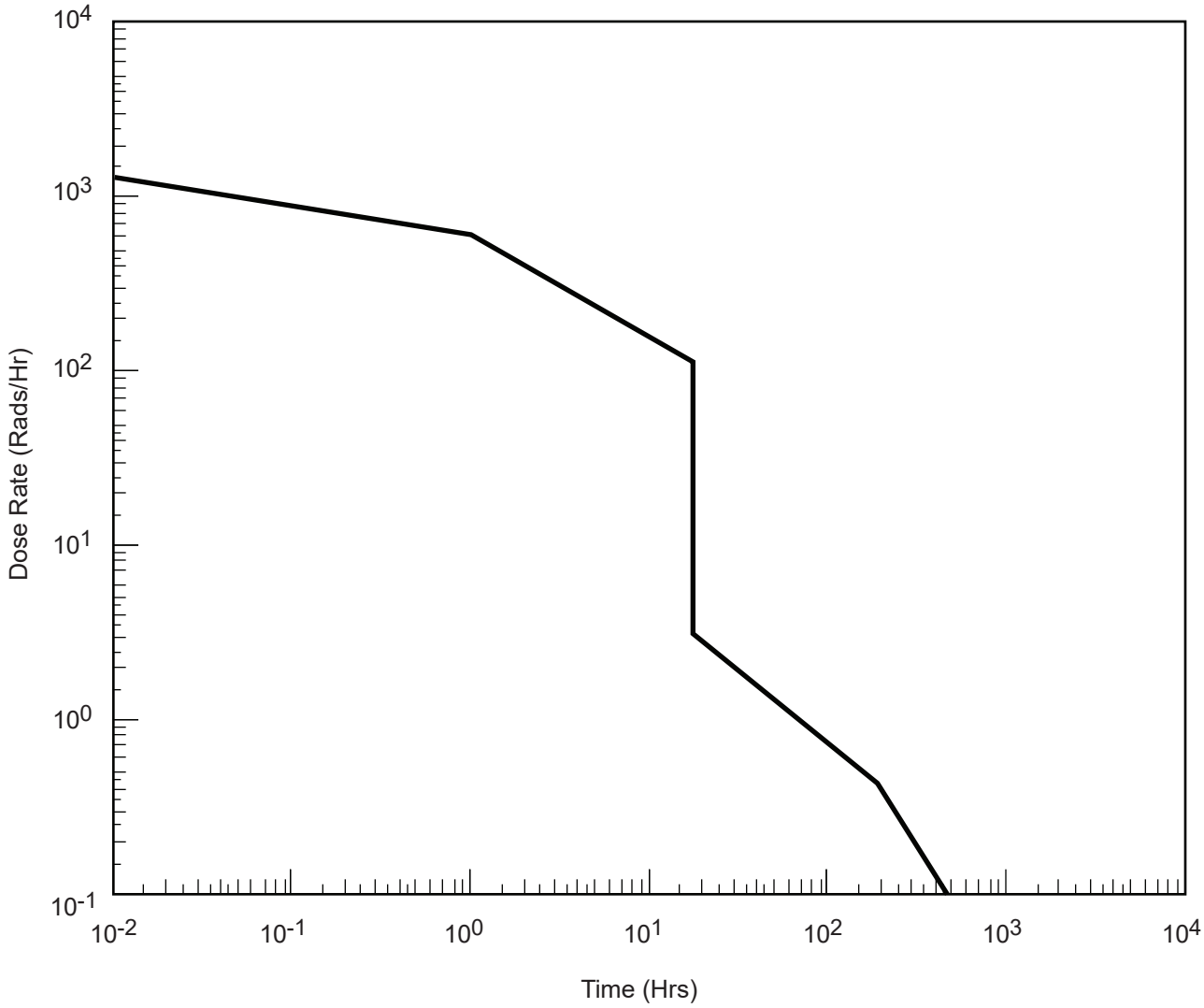

Columbia Generating Station Final Safety Analysis Report	Standard Gamma Dose Rate Curve for Pipes in the MSIV-LCS Steam System After the Header		
	Draw. No. 970187.31	Rev.	Figure J.B-8

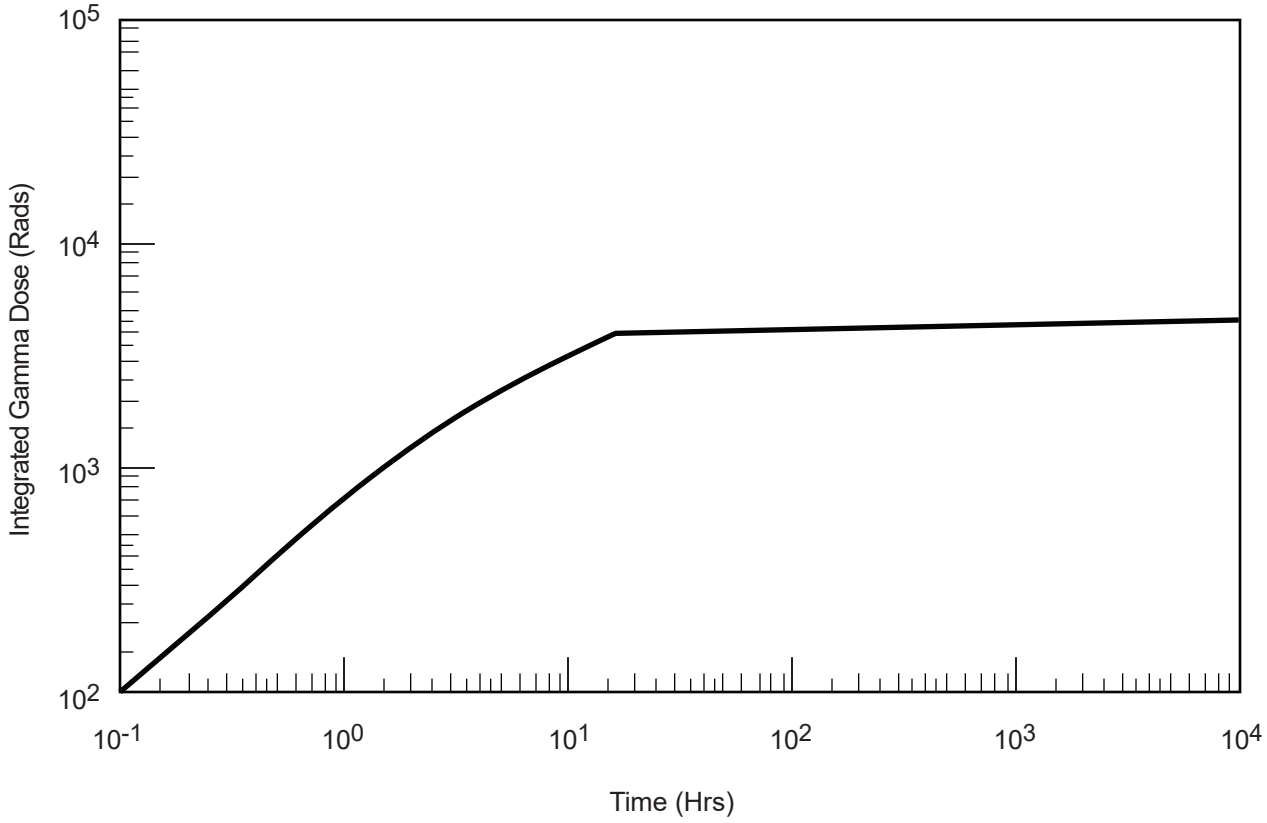

Columbia Generating Station Final Safety Analysis Report	Standard Integrated Gamma Dose Curve for Pipes in the MSIV-LCS Steam System After the Header		
	Draw. No. 970187.32	Rev.	Figure J.B-9

Deleted

Deleted

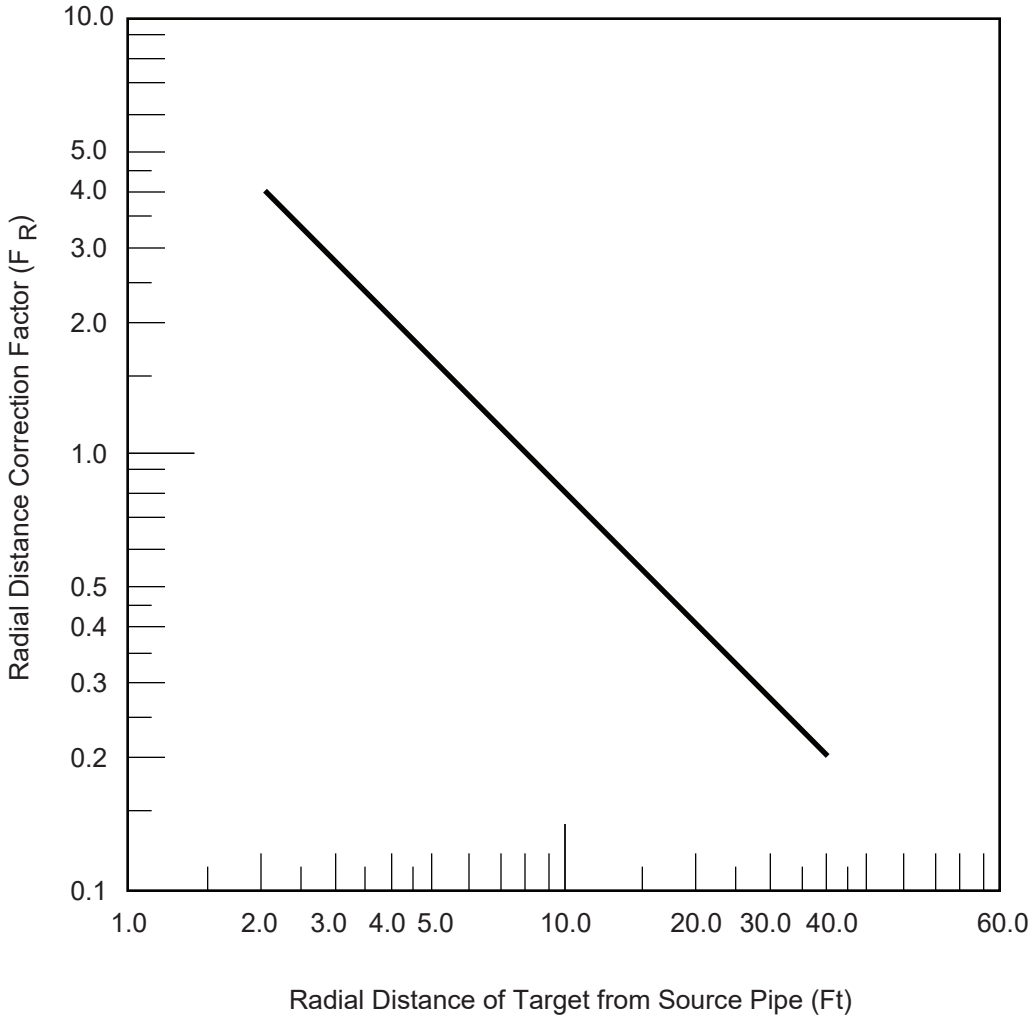

Columbia Generating Station Final Safety Analysis Report	Radial Distance Correction Factor for Liquid Sources		
	Draw. No. 970187.35	Rev.	Figure J.B-12

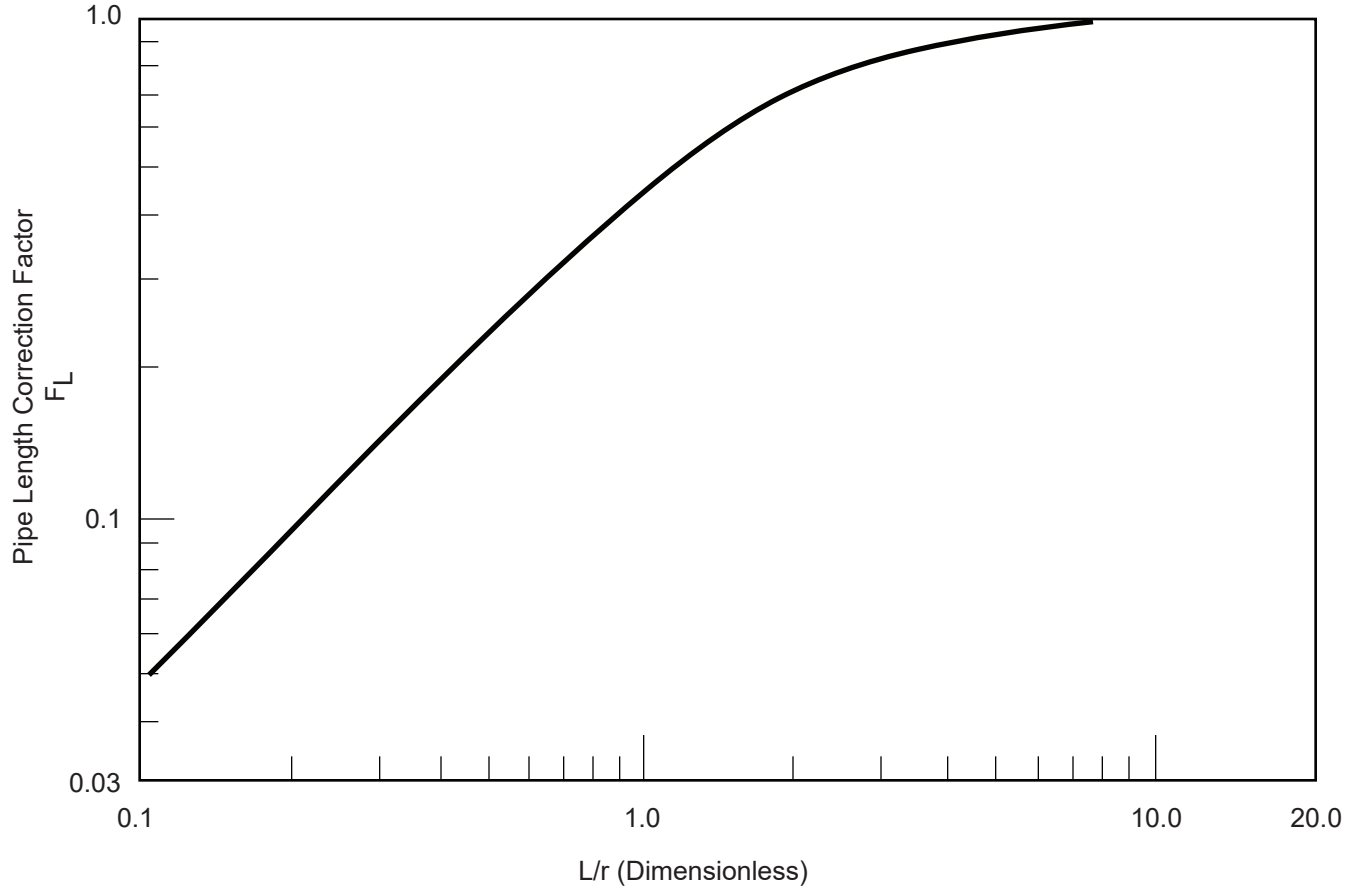

Columbia Generating Station **Final Safety Analysis Report**	**Pipe Length Correction Factor for Liquid Sources**		
	Draw. No. **970187.36**	Rev.	Figure **J.B-13**

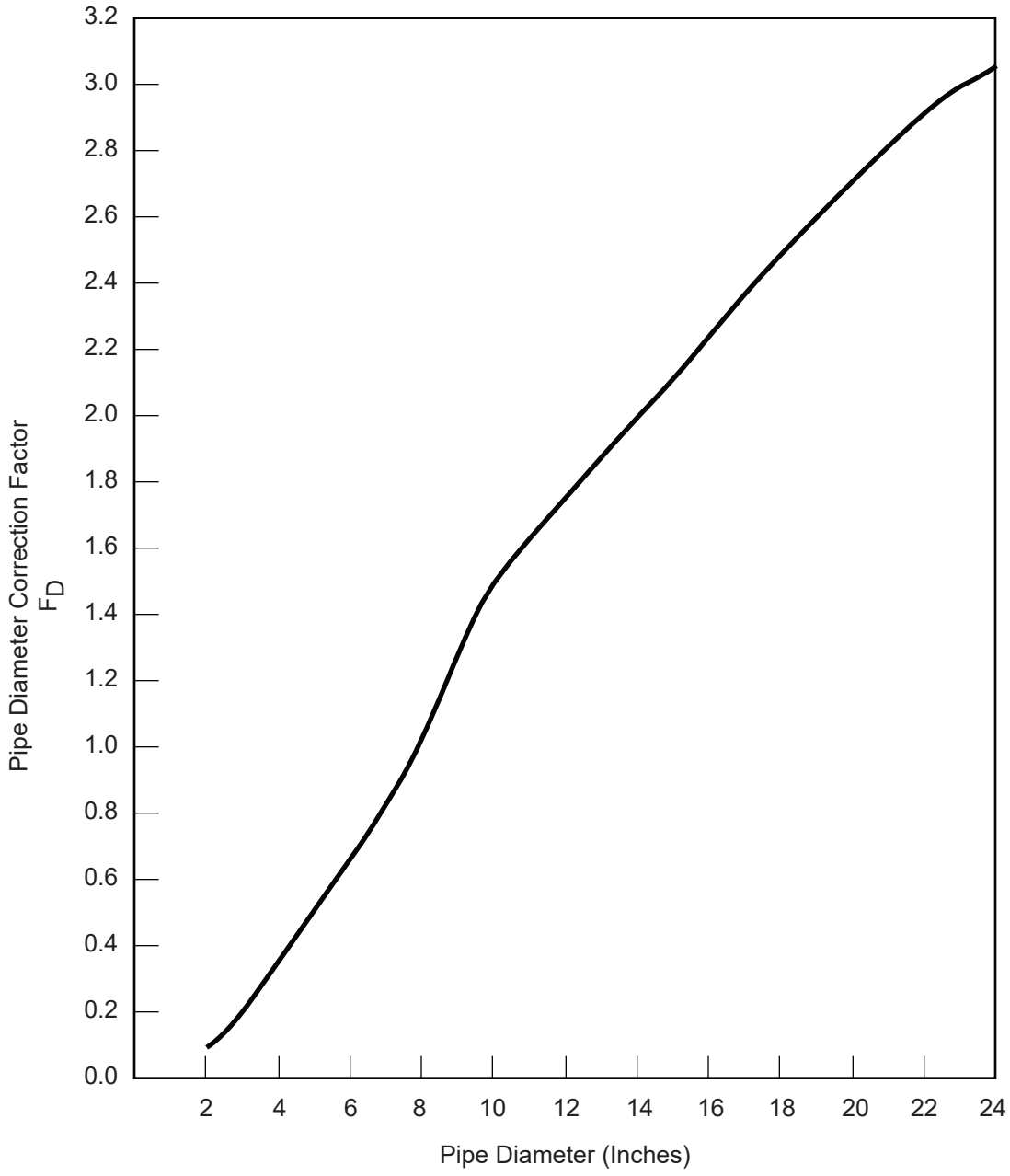

Columbia Generating Station Final Safety Analysis Report	Pipe Diameter Correction Factor for Liquid Sources		
	Draw. No. 970187.37	Rev.	Figure J.B-14

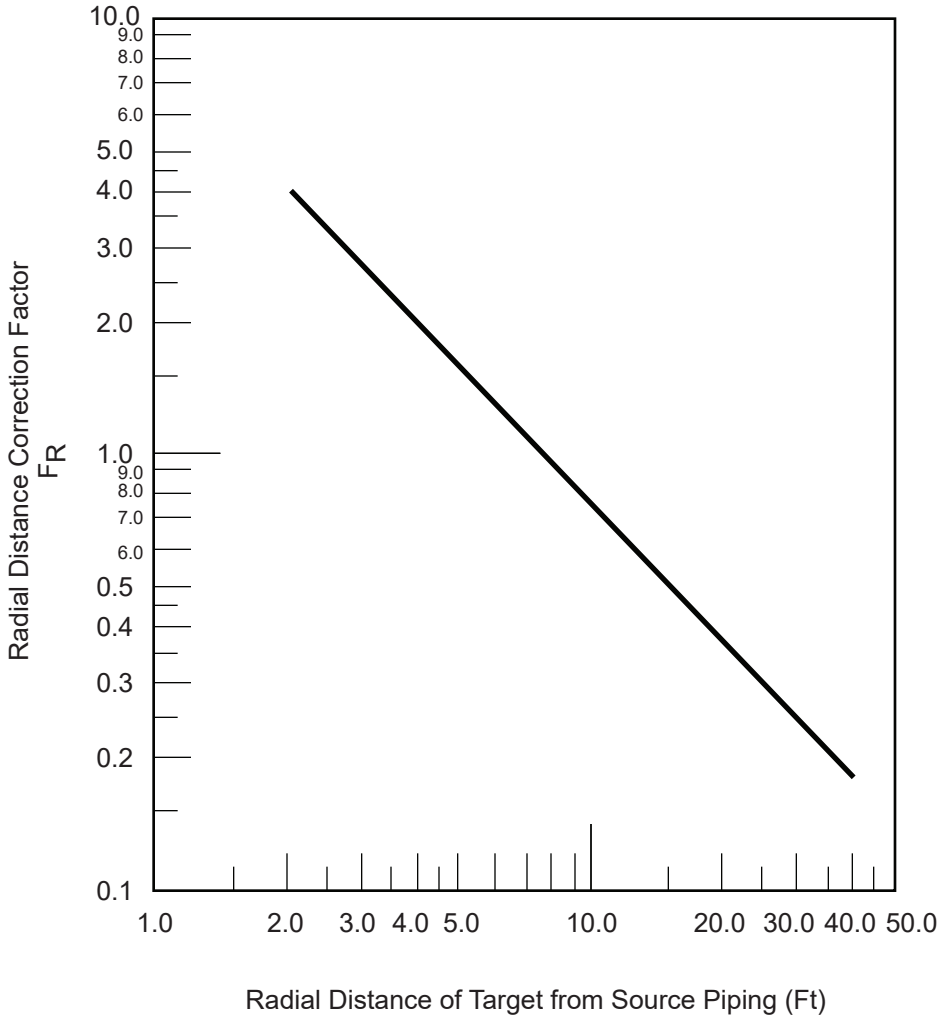

Columbia Generating Station Final Safety Analysis Report	Radial Distance Correction Factor for Gaseous Sources		
	Draw. No. 970187.38	Rev.	Figure J.B-15

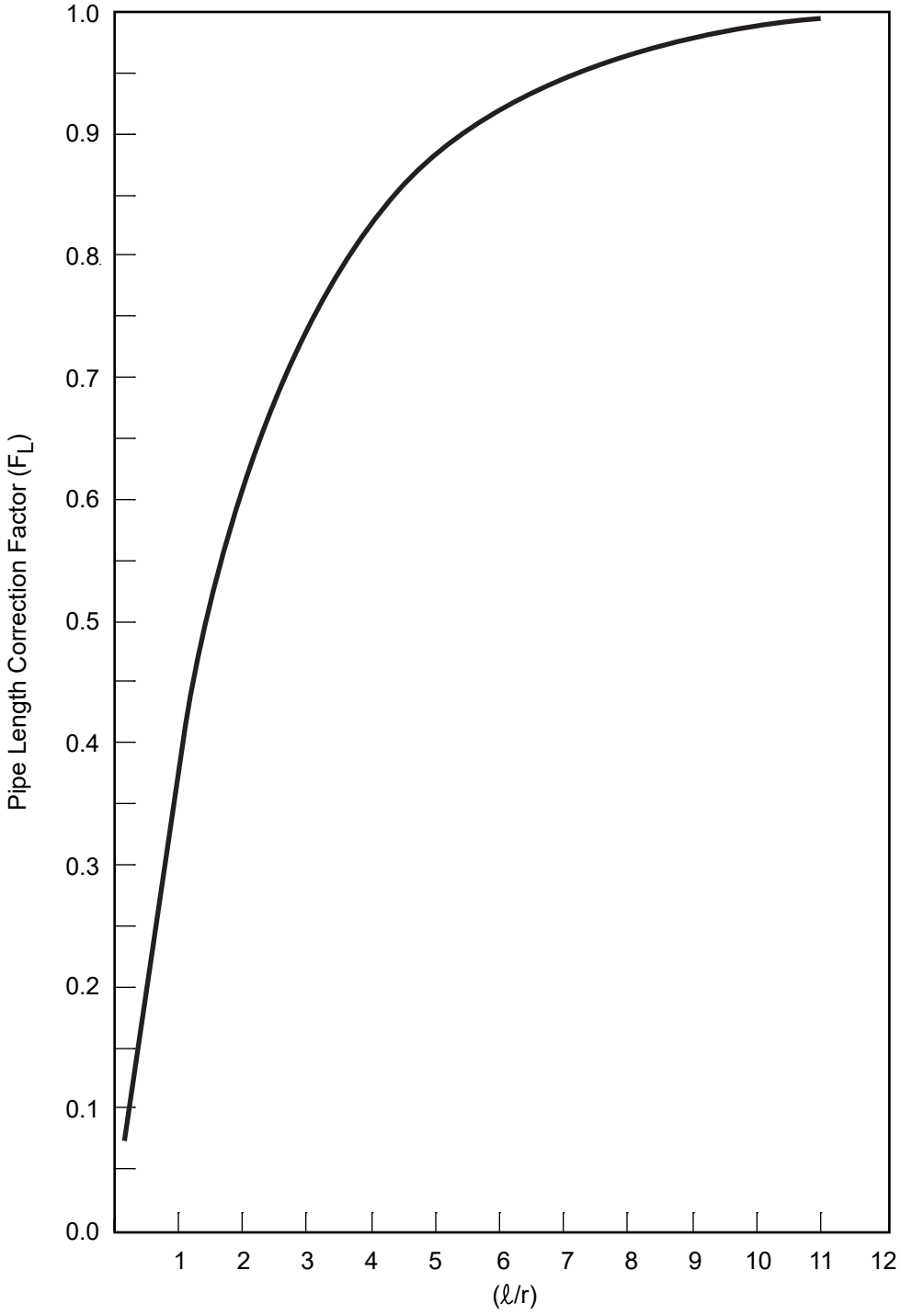

Columbia Generating Station **Final Safety Analysis Report**	**Pipe Length Correction Factor for Gaseous Sources**	
	Draw. No. **970187.39**	Rev. Figure **J.B-16**

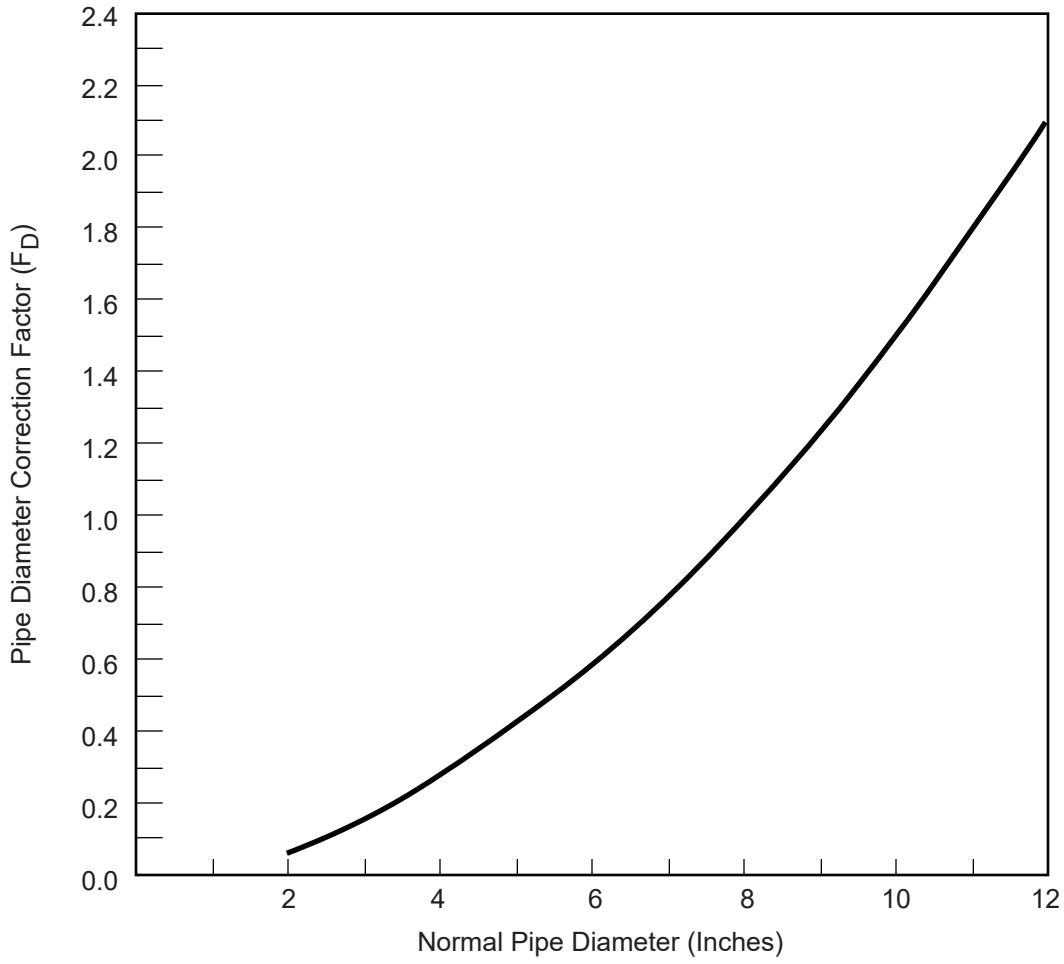

Columbia Generating Station Final Safety Analysis Report	Pipe Diameter Correction Factor for Gaseous Sources		
	Draw. No. 970187.40	Rev.	Figure J.B-17

Configuration 1

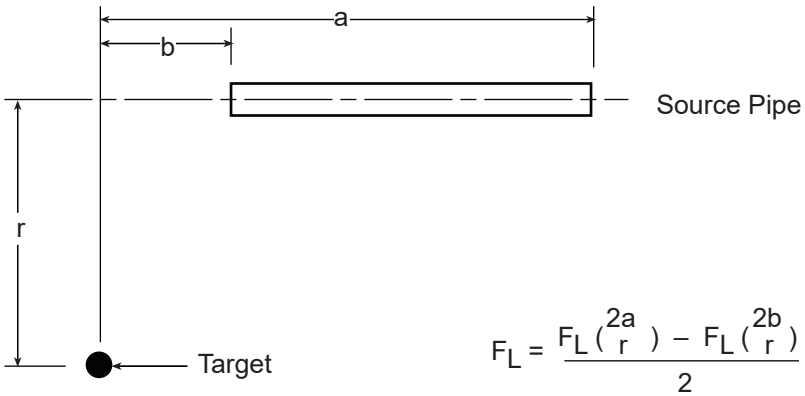

$$F_L = \frac{F_L\left(\frac{2a}{r}\right) - F_L\left(\frac{2b}{r}\right)}{2}$$

Configuration 2

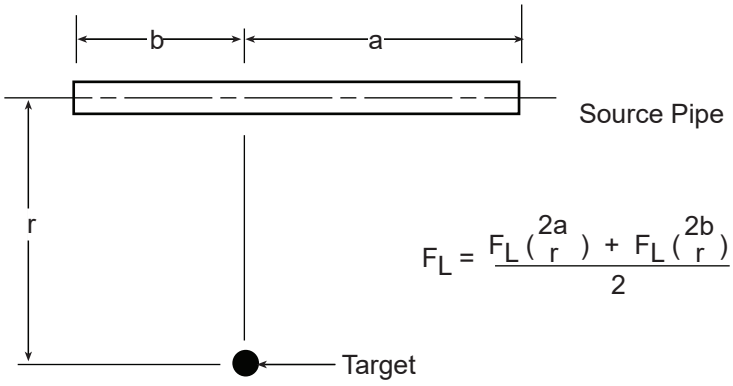

$$F_L = \frac{F_L\left(\frac{2a}{r}\right) + F_L\left(\frac{2b}{r}\right)}{2}$$

Attachment J.C

PROCEDURE FOR THE CALCULATION OF SECONDARY CONTAINMENT RADIATION ZONE GAMMA DOSES

J.C.1 INTRODUCTION

Three Mile Island Lessons Learned Short Term Recommendations (NUREG-0578) Section 2.1.6.b, requires all nuclear power plant licensees to calculate post-loss-of-coolant accident (LOCA) environmental conditions for all safety-related equipment. This procedure is specifically concerned with the definition of the postaccident radiological environments in the secondary containment of Columbia Generating Station (CGS), a BWR.

The assumptions used in this procedure are based on a nonmechanistic LOCA scenario in which core damage is experienced at the beginning of the accident and primary containment isolation is achieved prior to radiation transport.

The radiation level at a given location inside the secondary containment of CGS during and following such an accident is defined by the following major source contributors.

Airborne gamma dose	Gamma ray dose from airborne radioactive sources inside secondary containment
Containment shine dose	Gamma ray dose from radioactive sources suspended in the drywell and the wetwell inside primary containment
Direct gamma dose	Gamma ray dose from piping containing recirculating radioactive fluids
Bioshield penetration streaming dose	Gamma ray dose from liquid piping and airborne radioactive sources inside primary containment which stream through bioshield wall penetrations into secondary containment

The methods presented in this procedure make it possible to calculate the worst-case gamma ray dose due to the above mentioned source of contributors inside radiation zones (see Section J.C.2 for the definition of radiation zones) of the secondary containment of CGS. The radiation zone dose calculated by using this procedure is applicable solely for the purpose of environmental qualification of safety-related equipment.

The following sections of this procedure describe the nomenclature, assumptions, and methods used in calculating radiation dose rates and cumulative doses. Section J.C.2 defines the terms and nomenclature found in this procedure. The assumptions and approximation used in

developing the dose rate calculation method, as well as limitations to this method, are stated in Section J.C.3. Section J.C.4 provides a step-by-step procedure for determining the worst-case gamma dose rate and cumulative dose inside a particular radiation zone. The calculation of airborne beta dose is defined in a separate calculation procedure and is not included in this procedure (see Attachment J.E).

J.C.2 DEFINITION OF TERMS

This section contains the definition of the terms and symbols as used in this procedure:

CIND: (rads) — Cumulative integrated dose
Cumulative dose due to exposure to the decaying radioactive sources.

D_a: (rads/hr) — Airborne gamma dose rate
Gamma dose rate resulting from radioisotopes suspended in the atmosphere of the secondary containment.

D_d: (rads/hr) — Direct dose rate
Gamma dose rate resulting from the radioactive fluid contained inside recirculating pipes.

D_s: (rads/hr) — Shine dose rate
Gamma dose rate in the secondary containment resulting from radioisotopes suspended and deposited inside primary containment.

D_B: (rads/hr) — Bioshield penetration streaming dose
Gamma dose rate contributed by the liquid piping and airborne radioactive sources inside primary containment which stream through the bioshield wall.

D_t: (rads/hr) — Total gamma dose rate
Gamma dose rate contributed by the sum of airborne, direct, and shine from penetrations into secondary containment.

$$D_t = D_a + D_d + D_s + D_B$$

GF: — Geometric factor
Scaling factor used to convert semi-infinite airborne gamma dose to finite dose inside enclosed air spaces.

$$D_a = \frac{D_{a,\infty}}{GF}$$

$$GF = \frac{1173}{V^{0.338}}$$ (Reference J.7-39)

F_L: Length conversion factor
A scaling factor dependent on the source pipe segment length and spatial orientation relative to a target (see Figure J.C-1 for the calculation of this factor). F_L is used to convert the standard dose to the dose emitted by a pipe segment of finite length.

F_D: Diameter conversion factor
A scaling factor dependent on the source pipe diameter. F_D is used to convert the standard dose to the dose emitted by a pipe of specified diameter.

F_R: Radial distance conversion factor
A scaling factor dependent on the radial distance of the target from the source piping. F_R is used to convert the standard dose to the dose at a target of specified radial distance from the source piping.

F_t: Total dose contribution correction factor
A scaling factor used to convert the standard dose to the dose at a target from a pipe segment of specified geometry and orientation.

$$F_t = F_D * F_R * F_L$$

F_s: Sum of dose contribution correction factor
A scaling factor used to convert the standard dose to the radiation zone dose due to all the significant pipe sources in the zone.

$$F_S = \sum_{i=1}^{n} F_{ti}$$

Radiation zone: A region in the secondary containment defined to be such that gamma radiation calculated in the zone bounds the magnitude of dose received by the pieces of safety-related equipment located in that zone.

Source term: The total radiated gamma energy associated with a specified quantity of radioactive material released from the reactor as the result of a postulated accident.

Special sources: Radioactive source of such geometry or concentration that cannot be approximated by pipe segments of diameters 2 in. through 24 in. and containing contaminated liquid of activity concentration established in Section J.C.3.1. This can be a heat exchanger, standby gas treatment filter, pump, etc.

Standard dose: Gamma dose at a target having a radial distance of 8 ft from the centerline of an infinitely long, 8-in.- diameter schedule 40 pipe.

Target: The point in space chosen to represent the location of an object for which a dose rate and/or cumulative dose is being calculated.

Worst case target: Location of the piece of safety-related equipment inside a radiation zone which will experience the highest gamma dose among all the pieces of safety-related equipment in that zone.

J.C.3 ASSUMPTIONS, APPROXIMATIONS, AND LIMITATIONS

J.C.3.1 Basic Assumptions to be Used in the Analysis

Gamma doses and dose rates inside radiation zones will be determined for four types of radioactive source distribution:

Major Source	Contributors
Airborne gamma dose	Isotopes suspended in the atmosphere of the secondary containment
Shine dose	Gamma irradiation from the primary containment
Direct dose	Direct gamma irradiation from the radioactive fluid contained inside recirculating pipes
Streaming dose	Gamma irradiation from liquid piping sources inside primary containment and primary containment atmosphere streaming through bioshield wall penetrations

The dose contributed by each of these sources is determined by the location of the equipment, the time dependent distribution of the source, and the effects of shielding.

The assumptions used in determining the initial distribution and leakage of radioactivity in the primary containment are as follows:

a. 100% of the noble gases and 50% of the halogens initially in the reactor core will be distributed homogeneously within the primary containment free volume immediately following the postulated accident. Plateout of 95% of the elemental iodines is allowed to occur in accordance with Reference J.7-34;

b. 50% of the halogens and 1% of the remaining fission products in the core will be mixed homogeneously with the primary containment liquid space instantaneously. The primary containment liquid space is defined as the sum of the suppression pool liquid and the reactor coolant system (RCS) liquid. Assumptions a and b are NRC-recommended assumptions for defining radioactivity release fractions for the qualification of safety-related equipment (Reference J.7-2) and are consistent with the accident analysis (Reference J.7-13);

c. The core fission product source term is defined as the total product generated in the core after 1000 days at a reactor power of 3556 MWt. This represents the maximum burnup level in the core prior to radioactivity release and is conservative; and

d. Primary containment leakage of 0.50% volume/day was considered and is consistent with the assumptions established in Reference J.7-13.

J.C.3.1.1 Assumptions Used in the Calculation of Airborne Dose Rate Inside Secondary Containment

a. Activity that leaks into the secondary containment is homogeneously mixed with the secondary containment atmosphere prior to its removal from the atmosphere by the standby gas treatment system (SGTS) exhaust fans. This is consistent with the NRC-recommended assumptions used for calculation of doses inside primary containment (Reference J.7-2);

b. The SGTS flow rate of 2430 scfm is assumed to be the flow rate of the effluent air and is based on one reactor building air change per day;

c. Air that leaks out of the primary containment flows directly into the secondary containment. Bypass leakage is not considered. This is conservative when considering dosage in the secondary containment, since it maximizes the buildup of radioactivity in the secondary containment; and

d. Geometric factors provide a good approximation to convert the semi-infinite cloud dose to a finite cloud dose and is based on the results presented in Reference J.7-28 and based on average gamma ray energy of 0.733 MeV. The effect of variation of this parameter due to difference in gamma ray energies have been proven to be negligible (see Attachment J.B for justification).

J.C.3.1.2 Assumptions Used for the Calculation of Shine or Streaming Dose From Primary Containment

a. No depletion of activity due to leakage is assumed to maximize the source activity and is conservative;

b. The airborne source is assumed to be uniformly distributed in the drywell and in the wetwell air space. The effect of the plateout of iodine is not considered in secondary containment;

c. Activity in the wetwell water volume is assumed to be uniformly distributed in the sump water. Assumptions b and c are based on the plateout modeling and source term assumption contained within References J.7-2 and J.7-34;

d. The dosage at a point inside the region closest to the source is considered to be representative of the gamma dose in the region which maximizes the gamma ray dose at the region and is conservative; and

e. The liquid piping sources inside primary containment are assumed to be uniformly distributed in the RCS for the first 17 hr post-LOCA. The liquid piping sources inside primary containment are assumed to be uniformly distributed in the RCS plus the suppression pool after the first 17 hr post-LOCA. This is consistent with the CGS operations procedure to depressurize and utilize the alternate shutdown cooling mode within 17 hr post-LOCA once a degraded core condition is identified.

J.C.3.1.3 Assumptions and Approximations Used in the Calculation of Direct Doses

a. No valve leakage is assumed, which is consistent with Reference J.7-5, Item II.B.2, Clarification (2);

b. Schedule 40 piping is assumed, which is a conservative simplification of the calculation process. Because the majority of the pipe segments considered are schedule 40 piping, and because increases in pipe schedule can only decrease the dose rate at the targets, this approximation is considered to be conservative and appropriate;

c. Heat exchangers and pumps can be approximated as pipe systems. The volume of radioactive liquid in the component and its length are used to determine an equivalent volume of liquid. This is a crude approximation for dose rates contributed by complex geometries. Because the pump and heat exchanger walls are thicker than the pipe walls of schedule 40 piping, this assumption is conservative; and

d. Radioactive piping with diameters 2-1/2 in. or less was not modeled unless it was determined that such a pipe was a major source contributor. A major source contributor is defined as the only radioactive pipe in a target area or the radioactive pipe of closest proximity to the target. This is made because the dose contributions due to pipe segments of diameter less than 2-1/2 in. are generally negligible, unless they are major source contributors.

J.C.3.2 Limitations

The following limitations apply to the use of this procedure for the calculation of radiation zone doses.

a. This procedure is only applicable to the calculation of radiation zone gamma doses in the secondary containment of CGS;

b. The assumptions stated in Section J.C.3.1 are basic to the methodology used in this procedure. Changes in any of the assumptions will affect the accuracy of the results generated using this procedure;

c. The calculation of direct doses using the generic curves in this procedure is limited to liquid sources in schedule 40 pipe segments or equivalent pipe segments with nominal pipe diameters ranging from 2 in. to 24 in. Any deviation from these pipe geometries should be modeled as special cases. Note: Schedule 40 piping is used because the majority of the pipe segments to be considered are standard pipes (schedule 40). Increases in the pipe schedule only introduces conservatism in the results;

d. The results for direct dose calculated using the generic curves were found to be accurate to within 10% (see Reference J.7-39 for error study); and

e. Source piping located 40 ft or further from the target is generally an insignificant dose contributor. If its contribution is not found to be negligible, it should be considered as a special source.

J.C.4 PROCEDURES FOR THE CALCULATION OF SECONDARY CONTAINMENT RADIATION ZONE DOSES

This procedure describes the method used in calculating the gamma radiation doses inside radiation zones. For equipment located inside a zone, the following four sources contribute to the total dose level.

a. Airborne dose (gamma),
b. Direct gamma dose from sources within pipes,
c. Direct gamma shine dose from drywell and wetwell, and
d. Gamma streaming dose from drywell and wetwell.

A step-by-step procedure is discussed in the following sections for the calculation of the maximum total gamma dose and dose rates for each zone.

J.C.4.1 Procedure A: Radiation Zone Dose Calculation

The first step in preparing a zone dose calculation is to identify all the parameters to be used. This includes the identification of all the potential sources and targets, both inside and outside the zone, and the identification of the dimensions of the zone. Figure J.C-2 is a step-by-step flowchart of the calculation procedure. When identifying sources outside the zone, sources at the upper and lower elevations in the review process are included. A conservative dose estimate is used to determine whether a source outside a zone is a significant contributor. For example, if the closest pipe segment in the zone is a few feet away from a target, then the dose estimate will show that a pipe segment outside the room at 30 ft is insignificant by comparison. Conversely, if a target is located near a wall with several pipes on the other side of a wall, then those pipes may become significant source contributors and are included in the final evaluation for the target.

J.C.4.2 Procedure B: Airborne Dose Calculation in Secondary Containment

Because the semi-infinite airborne dose and dose rates are already calculated and shown in Figures J.C-6 and J.C-7, the only calculation involved in determining the airborne dose is the conversion of the semi-infinite cloud dose at reactor building concentrations to a finite cloud dose inside the cubicles in which the radiation zones are defined. The first step in this calculation is to determine the volume which defines the air space (or zone) of interest. An enclosed air space is defined as a cubicle, at least 95% shielded by concrete (or equivalent shielding) at least 1 ft thick.

To convert a semi-infinite cloud dose (calculated in Reference J.7-38) to a finite cloud dose, a geometric factor is used.

$$D_a(t) = \frac{D_{a,\infty}(t)}{GF} \qquad \text{(J.4-1)}$$

$$\text{where } GF = \frac{1173}{V^{0.338}} \text{ (Reference J.7-39)} \qquad \text{(J.4-2)}$$

GF = geometric factor (dimensionless)
V = volume of the enclosed air space (ft^3)

Similarly,

$$CIND_a(t) = \frac{CIND_{a,\infty}(t)}{GF} \qquad \text{(J.4-3)}$$

Figure J.C-3 is a step-by-step flowchart of the procedure for calculating airborne gamma doses.

J.C.4.3 Procedure C: Primary Containment Shine Dose Calculation

Containment shine doses are calculated using the QAD-P5A computer code. Guidelines for preparing input parameters are documented in Procedure E and Reference J.7-10. The modeling procedure and the accuracy of the results are highly dependent on the geometry to be modeled, specification of the source volume, and the selection of a buildup factor. Figure J.C-4 is a step-by-step procedure for calculating containment shine doses.

J.C.4.4 Procedure D: Direct Dose Calculation

The first step in the direct dose calculation (from Reference J.7-39) is the identification of the "worst-case" target. Normally, the worst-case target is the piece of equipment that is closest to the major source piping and can be selected by inspection. However, if situations arise such that the worst-case target cannot be chosen by simple inspection, order-of-magnitude calculations are performed for each potential worst-case target in the zone. These calculations are illustrated in Steps 3a through 3c of Figure J.C-5.

The next step is to identify special sources. Special sources are defined as source geometries that cannot be represented by liquid pipe segments between 2 and 24 in. in diameter. Example special sources are SGTS filters, reactor core isolation cooling (RCIC) steam pipe, turbines, and heat exchangers larger than 24-in. diameter. Other components such as pumps and small heat exchangers should be modeled as pipes. The pipe cross-sectional area is calculated by dividing the total fluid volume by the effective length of the component.

The contribution due to sources with shield walls is investigated next. Figure J.C-13 is used for this evaluation. If these sources are determined to be significant contributors, special QAD-P5A modeling procedures as described in Procedure E are followed.

It is unlikely that all sources under consideration will contribute significantly to the dose at a specific target. If all source contributions were to be calculated, the time involved in performing the calculation would be unnecessarily long without making a substantial improvement in the accuracy of the results.

Hence, as the sources are being identified, good judgment is used to distinguish between sources which contribute significantly to the target dose and those sources which do not.

An insignificant source is determined by comparing its dose contribution to the source making the largest dose contribution. The comparison is facilitated by arranging sources in decreasing order of importance and assigning rank numbers to the sources. The largest dose contributor is given a ranking number of 1. The largest dose contributor is determined by inspection of the sketches and drawings being used. The largest dose contributor is generally the longest segment with the largest pipe diameter and the least amount of intervening shielding between the target and source. All sources which are in the radiation zone and have been assumed to be insignificant contributors are listed as such to indicate that those sources have been considered.

Equations Used in the Calculation of Dose Rates

The following procedure is followed for the calculation of correction of dose rates factors of dose rates (Step 9 through Step 12 of Figure J.C-5):

a. Identify the radial distance of the pipe segment from the target; read F_R from Figure J.C-11.

   If the target is in contact with the source piping, read F_D from Table J.C-1 and set F_R and F_L equal to 1.

   (Note: dose rate is not a function of pipe length and radial distance.)

   If the target is geometrically in line with the source pipe segment, as shown in configuration 3 of Figure J.C-1, set $F_L = 1$ and read F_D and F_R from Figures J.C-14 and J.C-15, respectively.

   (Note: F_L is defined here because dose rate is not sensitive to pipe length variation.)

b. Identify the pipe diameter; read F_D from Figure J.C-10.

c. Determine F_L from Figure J.C-12; use equations in Figure J.C-1 to calculate this factor.

d. The total dose contribution factor for a given pipe segment (I) is given as

$$F_t(I) = F_D(I) * F_R(I) * F_L(I)$$

e. When all the significant contributions have been calculated, sum the total dose contribution factors.

$$F_s = \sum_{n=1}^{n} F_t\ (I)$$

f. To determine if a source is negligible, the following test should be performed:

When N source segments are being considered and the dose contribution of ranking I is less than 1/10 of the dose rate calculated from the largest source divided by (N-I), the sources remaining should not contribute more than 10% to the total source contribution. This level of accuracy should be adequate for most calculations.

The total integrated direct dose and dose rate can be calculated.

$$D_D(t) = D_{Do}(t) \bullet F_s + D_D(t) \qquad \text{(Special Sources)}$$

$$CIND_D(t) = CIND_{Do}(t) \bullet F_s + D_D(t) \qquad \text{(Special Sources)}$$

where $D_{Do}(t)$ and $CIND_{Do}(t)$ are dose rates and cumulative doses for standard pipe segments and are found on Figures J.C-8 and J.C-9.

J.C.4.5 Procedure E: QAD-P5A Modeling Procedure

Direct dose contribution due to special sources and/or sources with shield walls should be calculated using the QAD-P5A computer code. This computer code is three-dimensional and calculates dose rates at specified target locations from radioactive volume, line, and point sources. Attenuation due to shield materials, if applicable, is also applied.

The accuracy of the results is highly affected by the manner by which the source volume is divided, and the position of the target relative to the source point. Therefore, a sensitivity study on the specification of the source volume should be performed. This can be achieved by

increasing the number of source volume divisions until the dose rate results converge to within 5%.

Another factor to be considered is the specification of the buildup factor. As a general rule, aluminum buildup factor should be used when concrete shield is encountered, and iron energy buildup factor should be used when considering attenuation through steel shield.

J.C.4.6 Procedure F: Streaming Dose Calculation

Containment streaming doses through the bioshield wall penetrations are calculated using the SCAP-BR and QAD-CG computer codes. The modeling procedure and the accuracy of the results are highly dependent on the geometry to be modeled, specification of the source volume, and the selection of a buildup factor.

Table J.C-1

Diameter Correction Factor (F_D) for Targets in Contact With the Source Piping

Nominal Pipe Diameter (in.)	Pipe Diameter Correction Factor (F_D)
2	18.4
4	24.4
6	54.6
8	33.3
10	35.3
12	35.3
14	35.5
16	33.7
20	32.0
24	29.6

Configuration 1

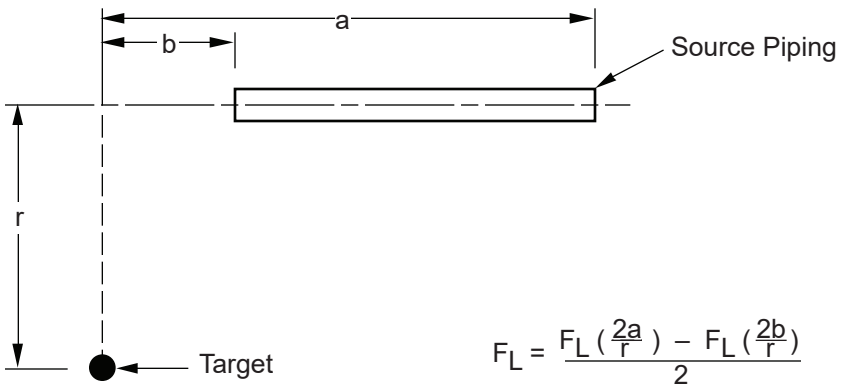

$$F_L = \frac{F_L\left(\frac{2a}{r}\right) - F_L\left(\frac{2b}{r}\right)}{2}$$

Configuration 2

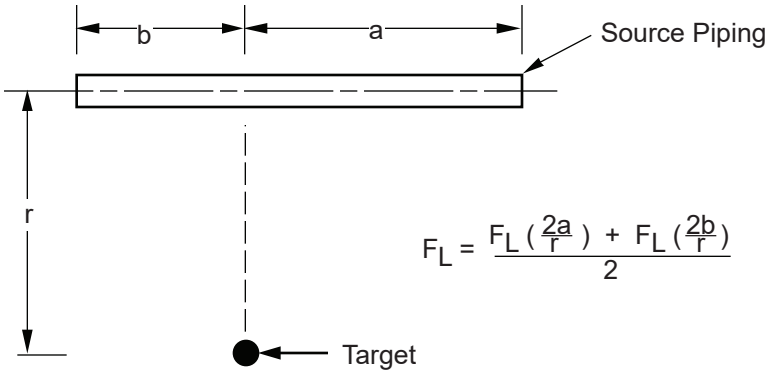

$$F_L = \frac{F_L\left(\frac{2a}{r}\right) + F_L\left(\frac{2b}{r}\right)}{2}$$

Configuration 3

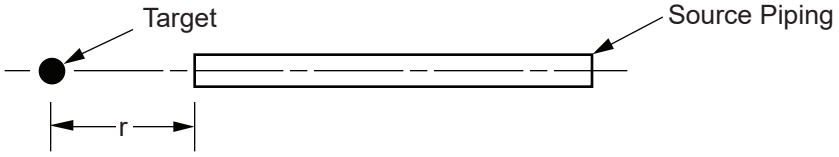

$$F_L = 1$$

Columbia Generating Station Final Safety Analysis Report	Calculation of Length Correction Factor		
	Draw. No. 970187.51	Rev.	Figure J.C-1

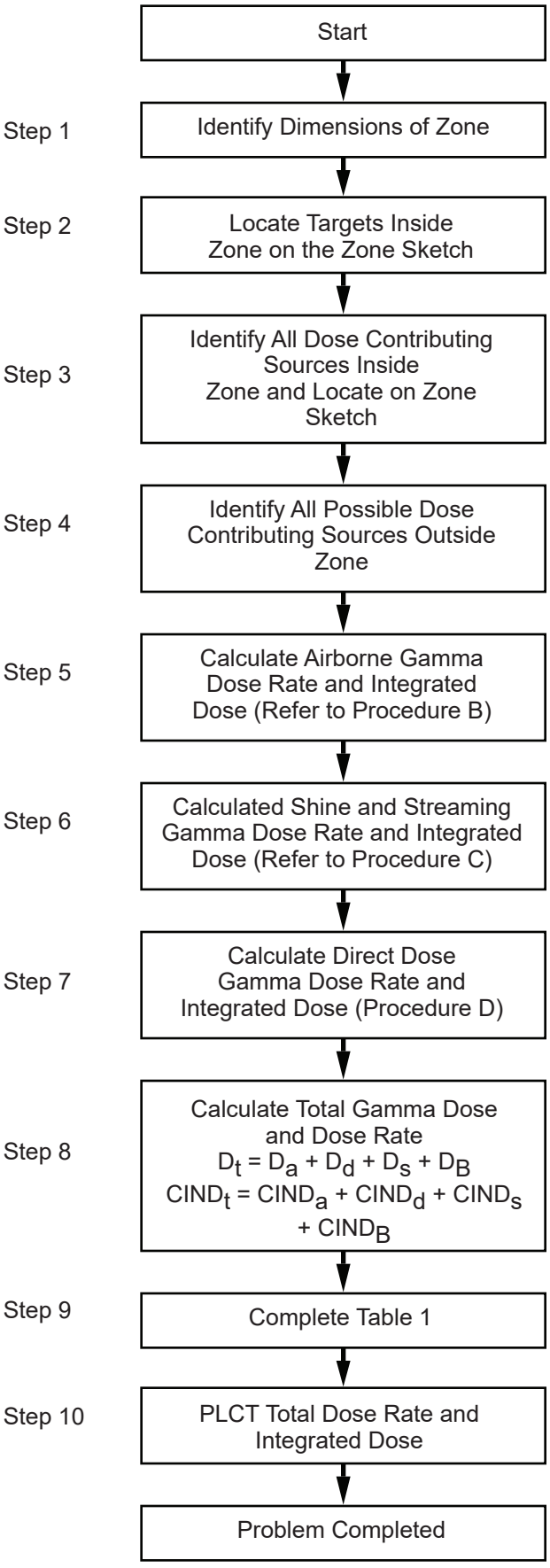

Columbia Generating Station Final Safety Analysis Report	Procedure A: Procedure for Calculating Radiation Zone Doses		
	Draw. No. 970187.52	Rev.	Figure J.C-2

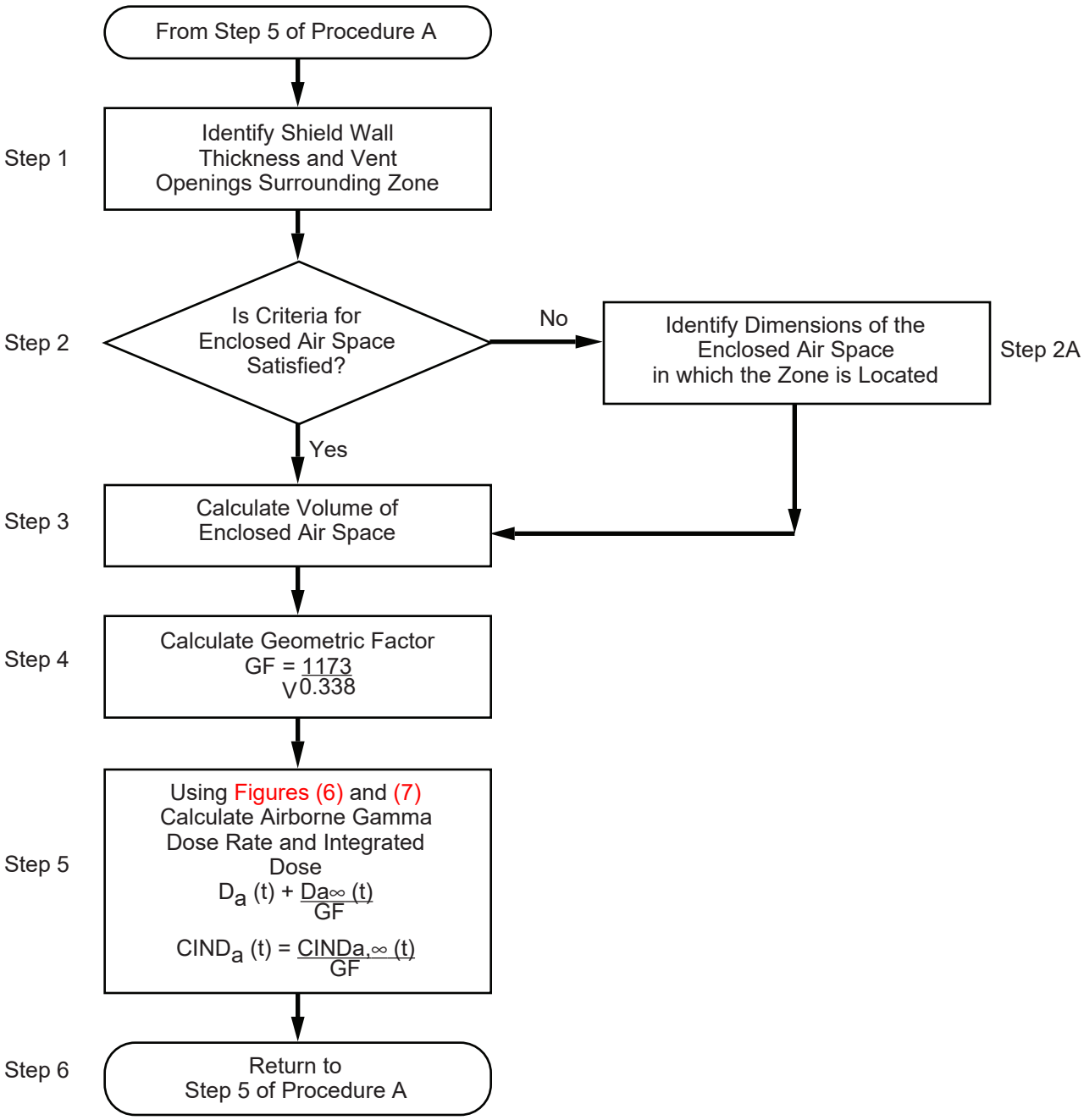

Columbia Generating Station Final Safety Analysis Report	Procedure B: Procedure for Calculating Airborne Gamma Dose Rate and Integrated Doses		
	Draw. No. 970187.53	Rev.	Figure J.C-3

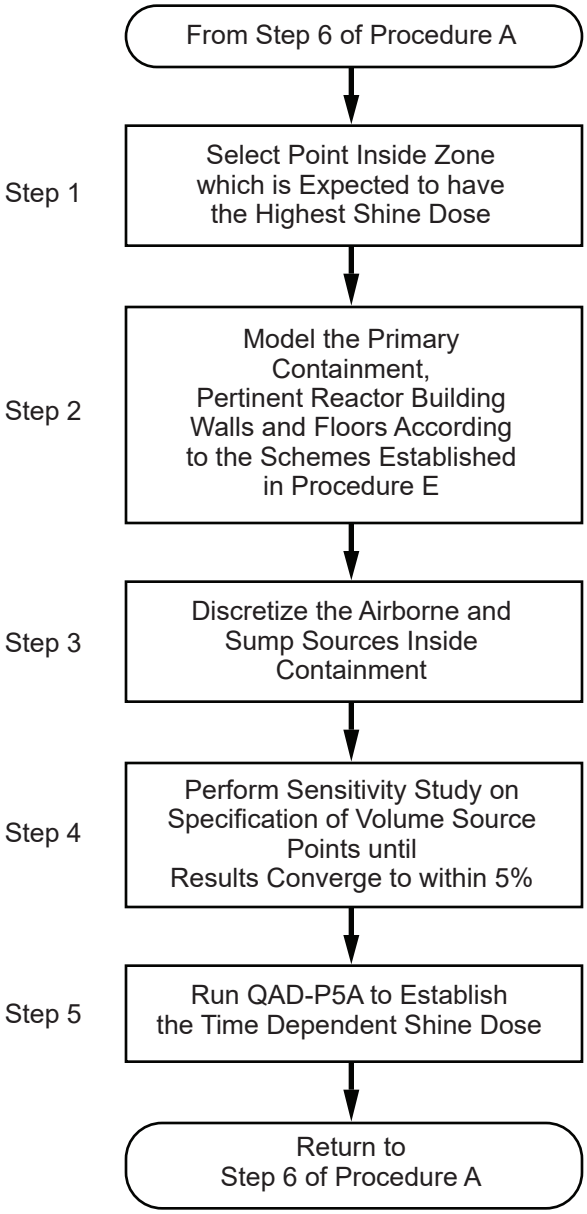
From Step 6 of Procedure A
Step 1
Select Point Inside Zone which is Expected to have the Highest Shine Dose
Step 2
Model the Primary Containment, Pertinent Reactor Building Walls and Floors According to the Schemes Established in Procedure E
Step 3
Discretize the Airborne and Sump Sources Inside Containment
Step 4
Perform Sensitivity Study on Specification of Volume Source Points until Results Converge to within 5%
Step 5
Run QAD-P5A to Establish the Time Dependent Shine Dose
Return to Step 6 of Procedure A

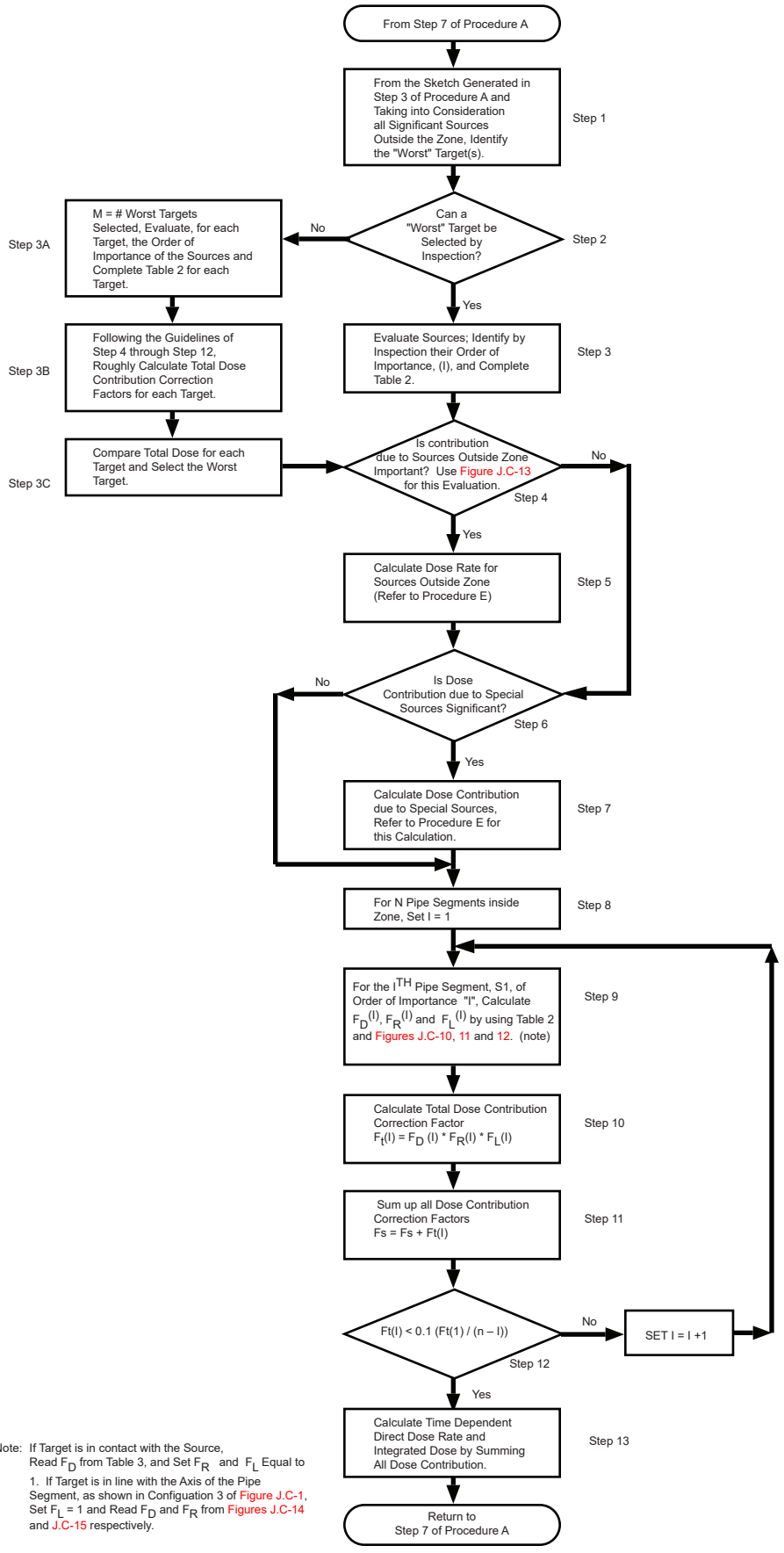

Note: If Target is in contact with the Source, Read F_D from Table 3, and Set F_R and F_L Equal to 1. If Target is in line with the Axis of the Pipe Segment, as shown in Configuation 3 of Figure J.C-1, Set F_L = 1 and Read F_D and F_R from Figures J.C-14 and J.C-15 respectively.

Columbia Generating Station
Final Safety Analysis Report

Procedure D: Procedure for Calculation of Direct Dose Rate and Integrated Dose

Draw. No. 970187.55	Rev.	Figure J.C-5

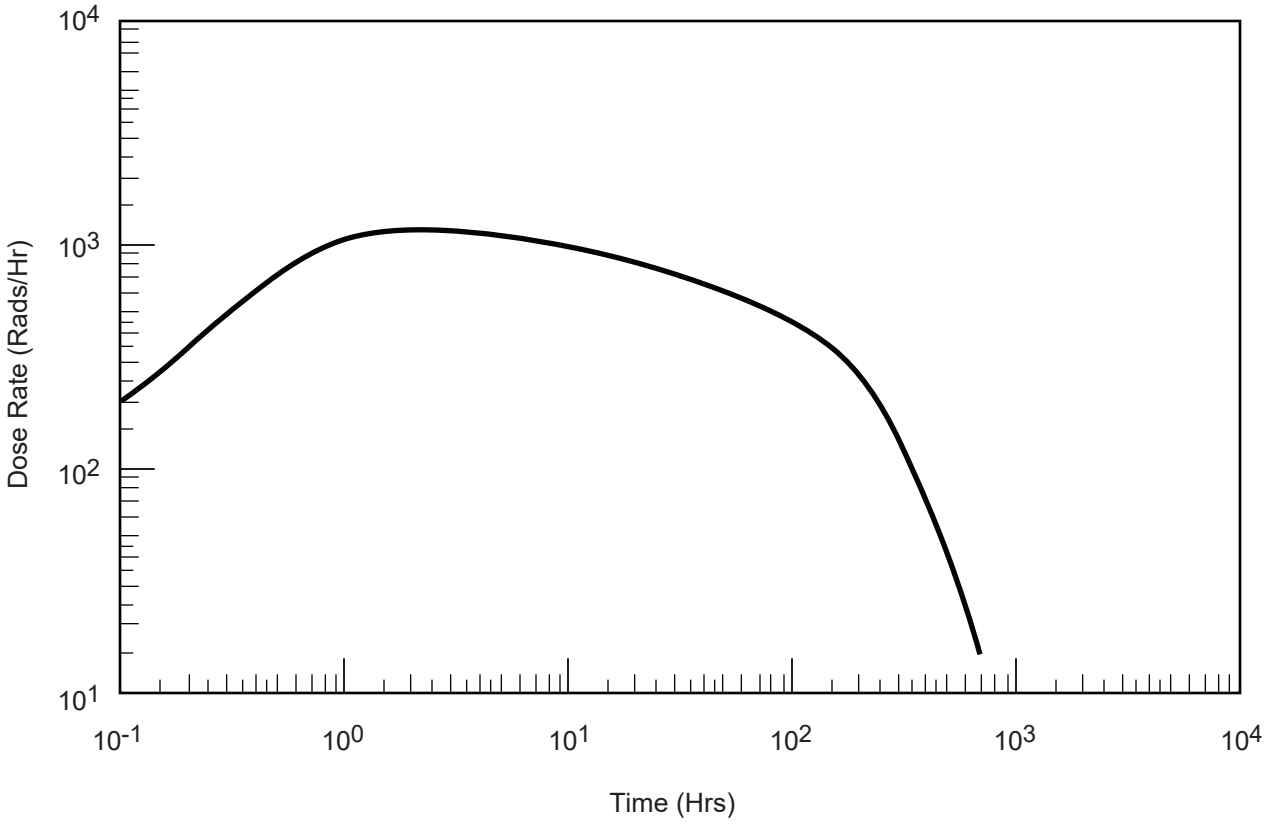

0.5%/Day Primary Containment Leakage Rate

Columbia Generating Station Final Safety Analysis Report	Time-Dependent Gamma Dose Rate for a Semi-Infinite Cloud of Fission Products at Secondary Containment Concentrations		
	Draw. No. 970187.56	Rev.	Figure J.C-6

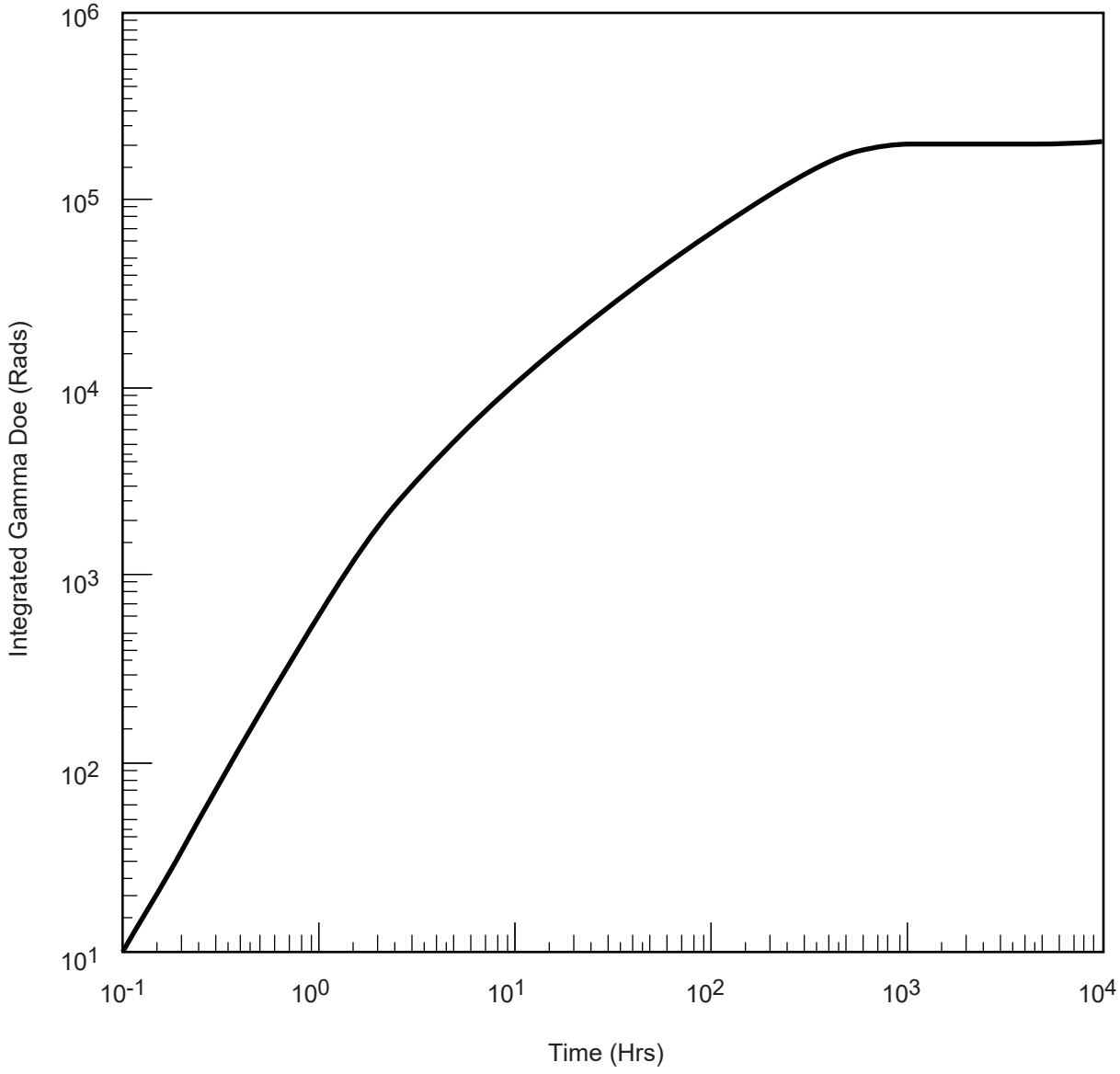

0.5%/Day Primary Containment Leakage Rate

Columbia Generating Station Final Safety Analysis Report	Time-Dependent, Integrated Gamma Dose Rate for a Semi-Infinite Cloud of Fission Products at Secondary Containment Concentrations		
	Draw. No. 970187.57	Rev.	Figure J.C-7

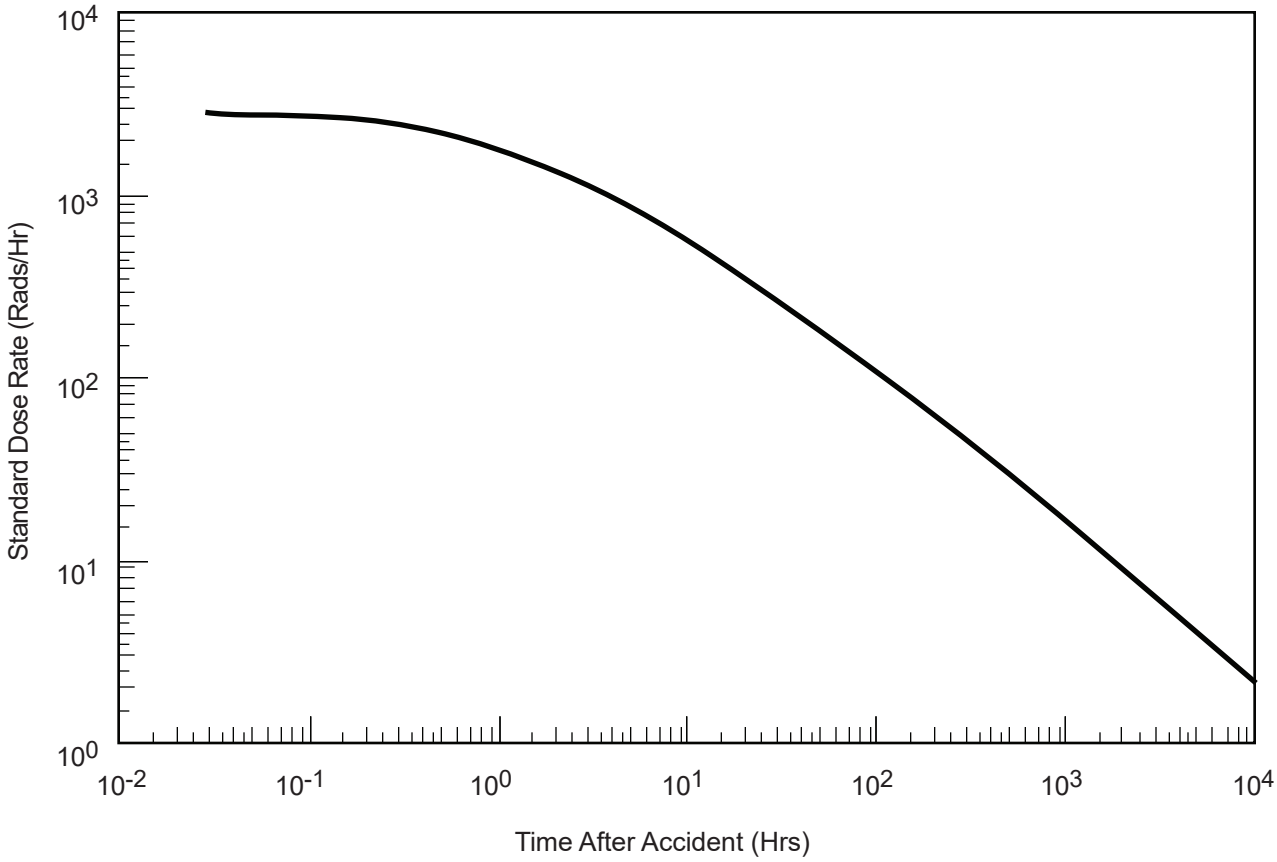

Columbia Generating Station Final Safety Analysis Report	Gamma Dose Rate at Target 8 ft Away from Standard Pipe		
	Draw. No. 970187.58	Rev.	Figure J.C-8

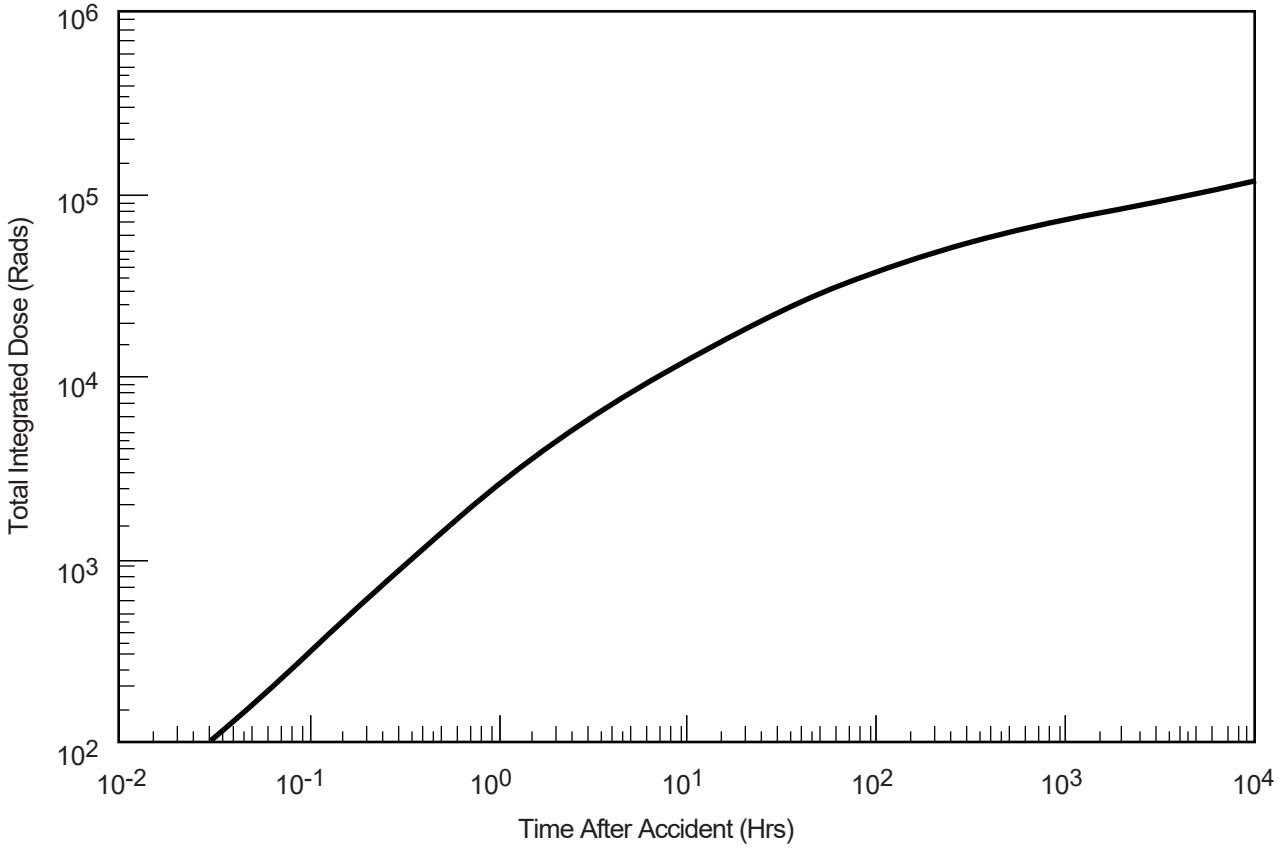

Columbia Generating Station Final Safety Analysis Report	Gamma Integrated Dose at a Target 8 ft Away from Standard Pipe		
	Draw. No. 970187.59	Rev.	Figure J.C-9

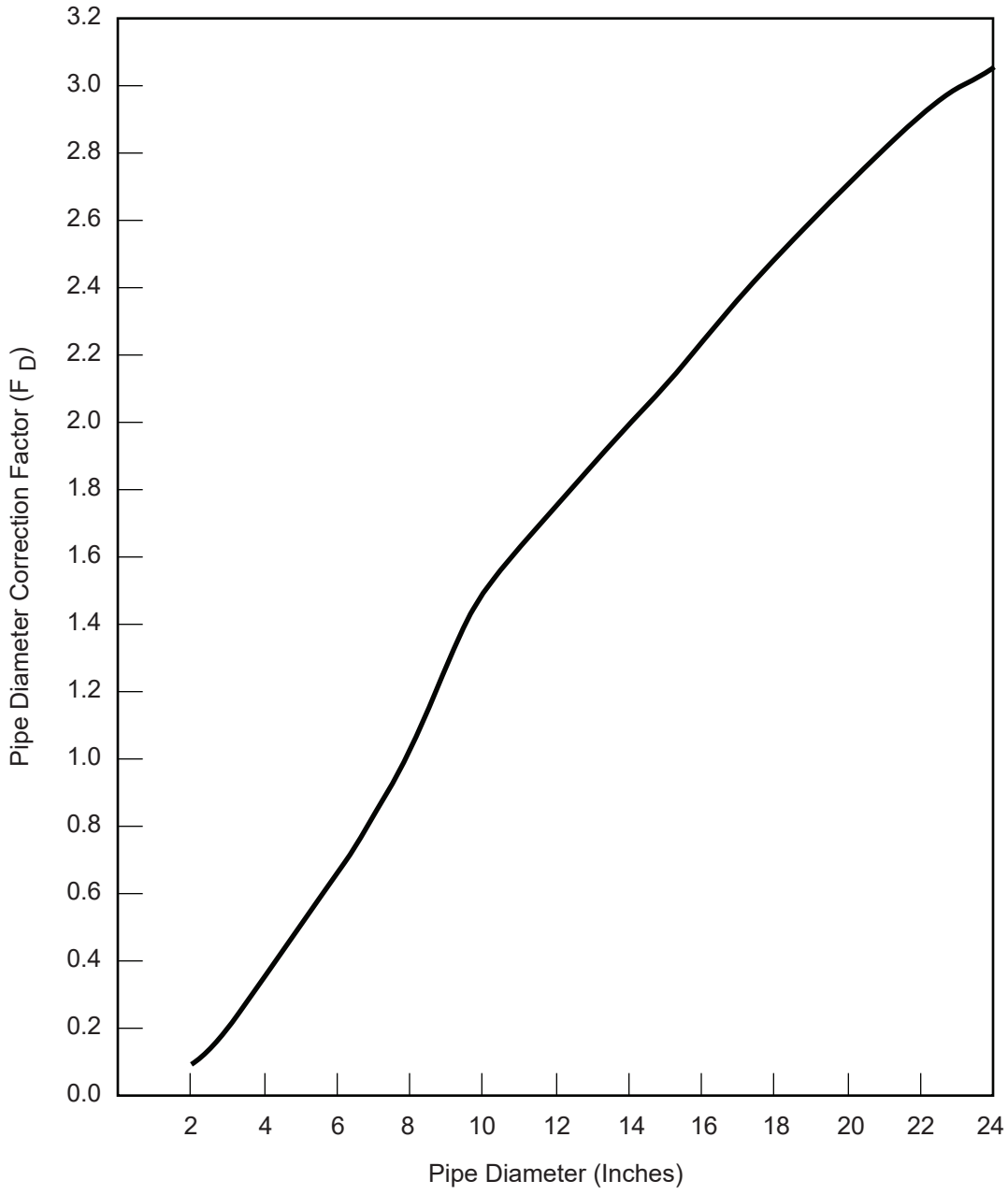

Columbia Generating Station Final Safety Analysis Report	Pipe Diameter Correction Factor		
	Draw. No. 970187.60	Rev.	Figure J.C-10

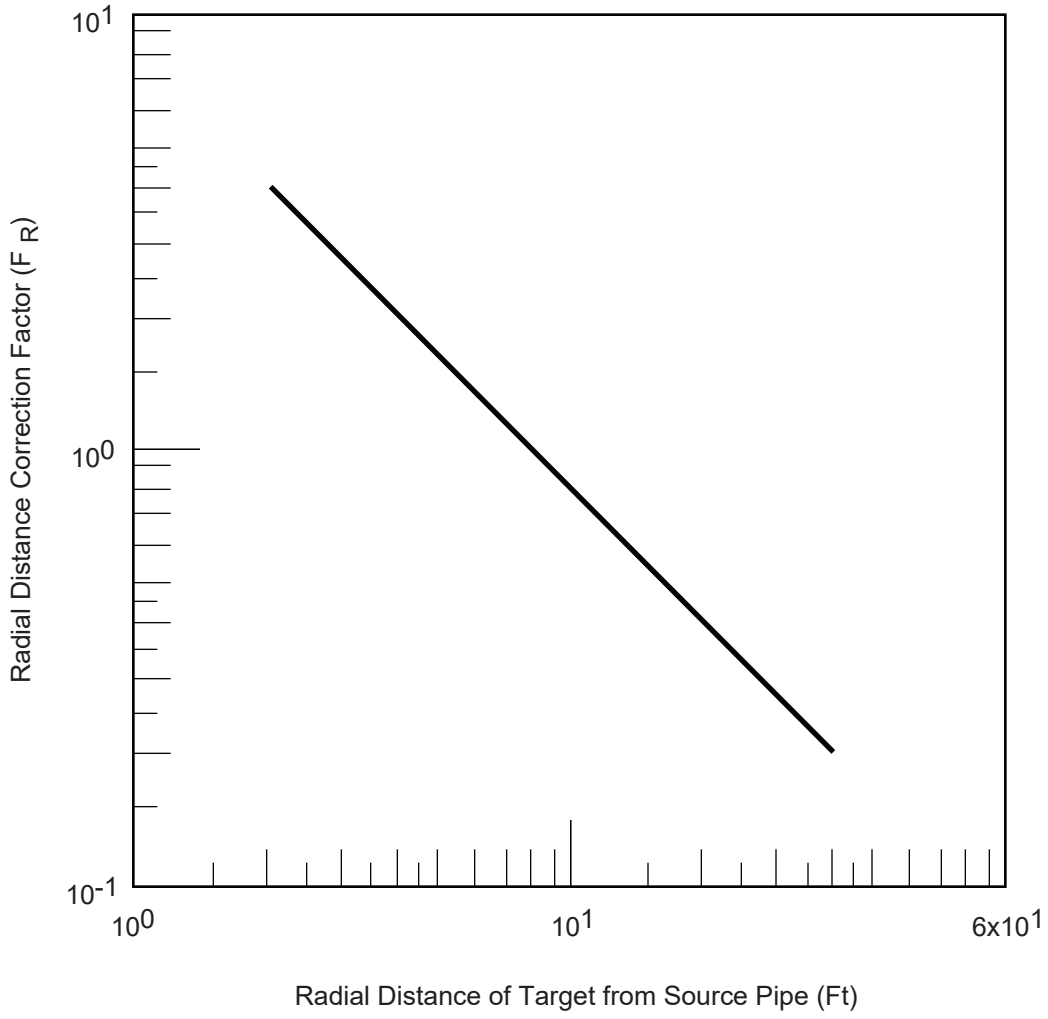

Columbia Generating Station Final Safety Analysis Report	Radial Distance Correction Factor		
	Draw. No. 970187.61	Rev.	Figure J.C-11

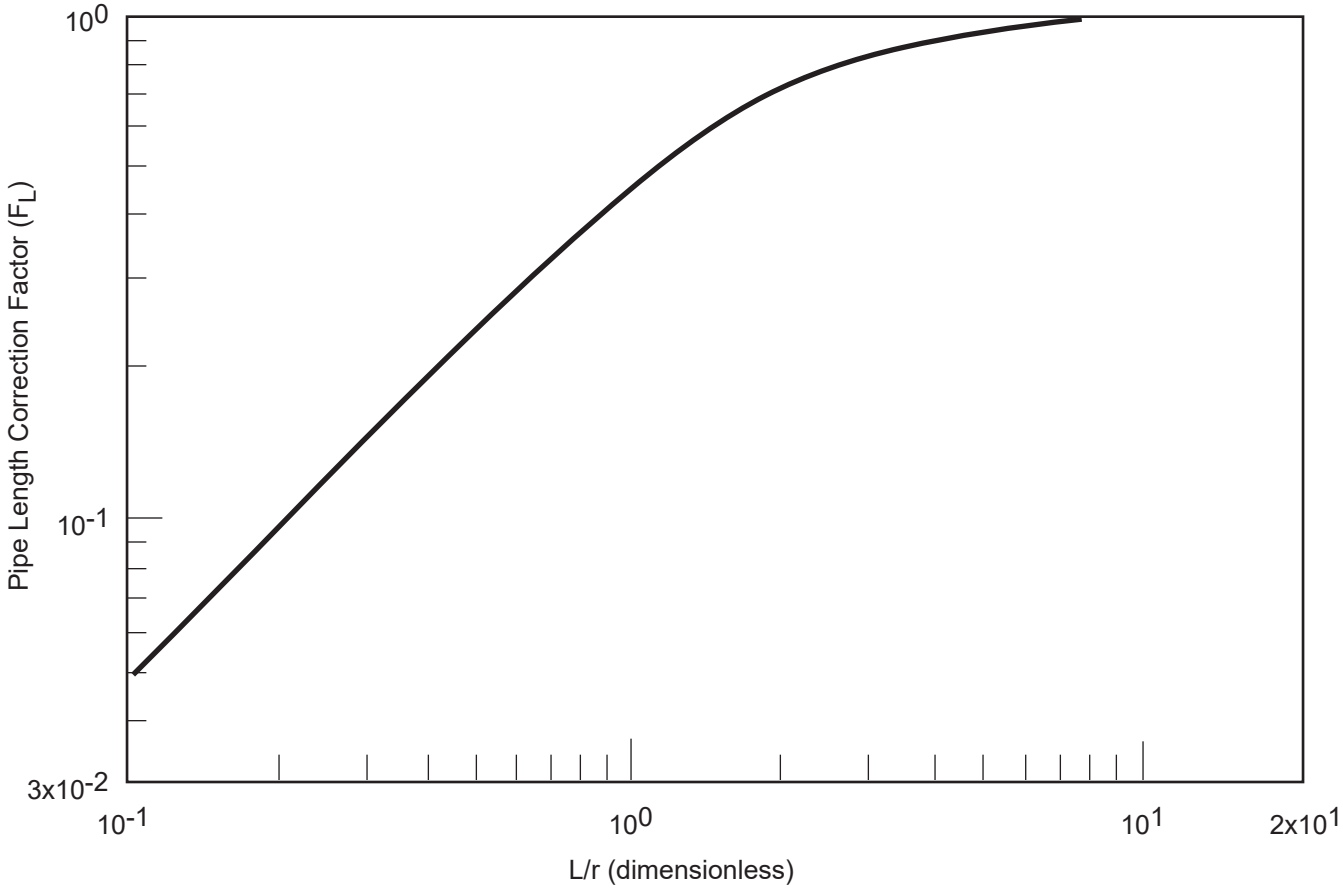

Columbia Generating Station Final Safety Analysis Report	Pipe Length Correction Factor		
	Draw. No. 970187.62	Rev.	Figure J.C-12

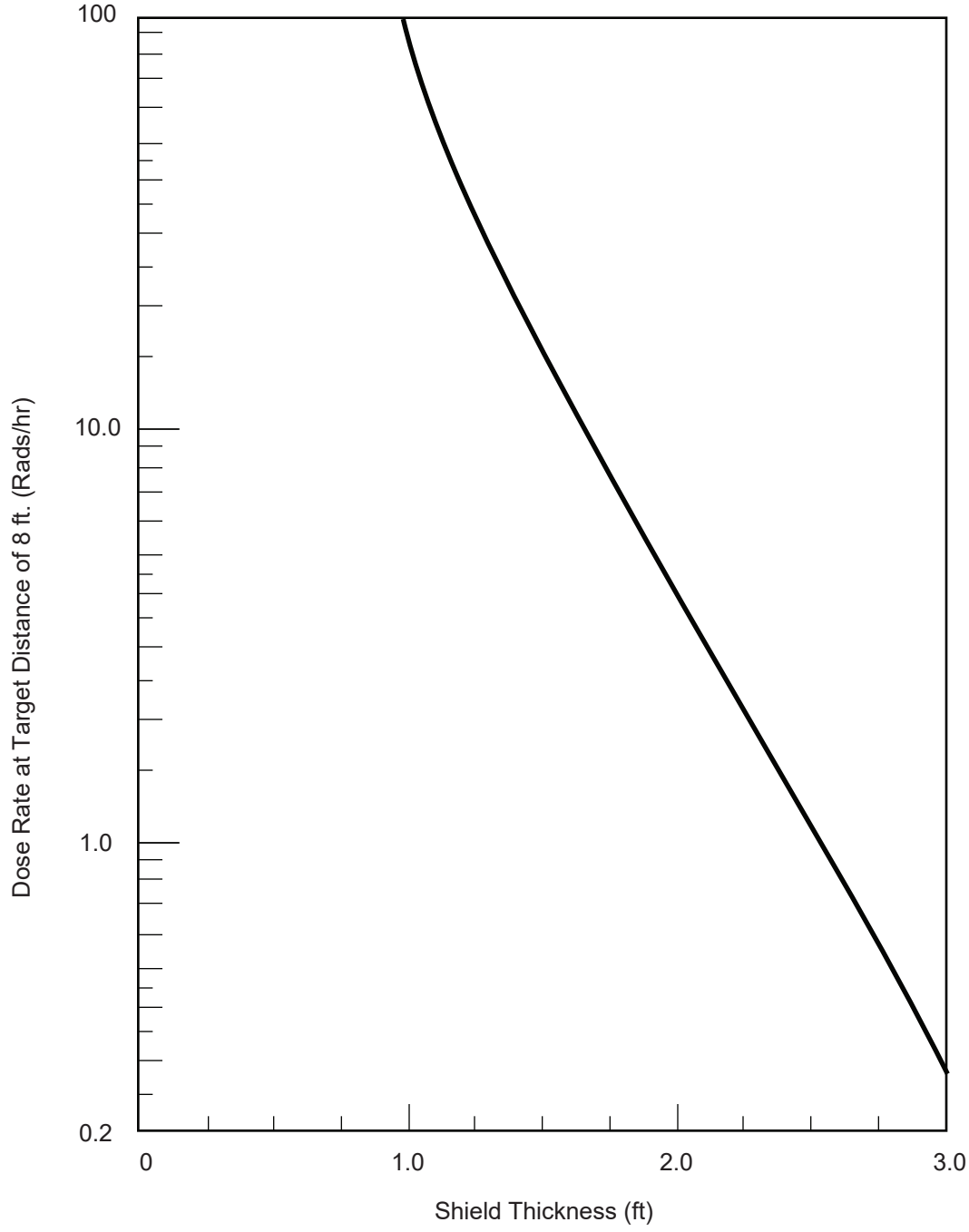

Note: This Figure is to be used for estimation purposes only.
Refer to Procedure E for calculating Dose rates outside shield walls

Columbia Generating Station **Final Safety Analysis Report**	**Dose Rate Versus Concrete Shield-Thickness for Standard Pipe (8 in. Sch 40)**		
	Draw. No. **970187.63**	Rev.	Figure **J.C-13**

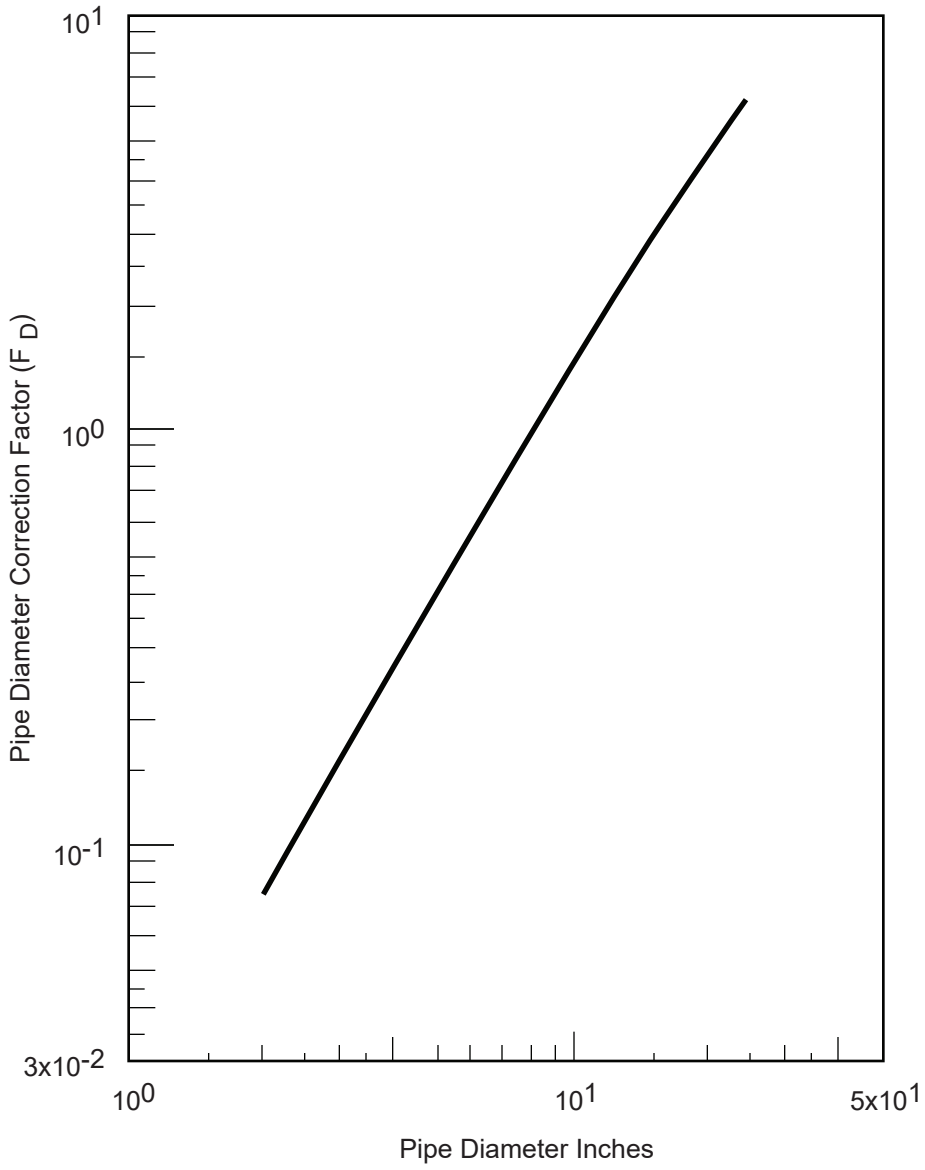

Configuration 3 of Figure J.C-1

Columbia Generating Station Final Safety Analysis Report	Pipe Diameter Correction Factor for Targets Located Axially in Line with Source Piping		
	Draw. No. 970187.64	Rev.	Figure J.C-14

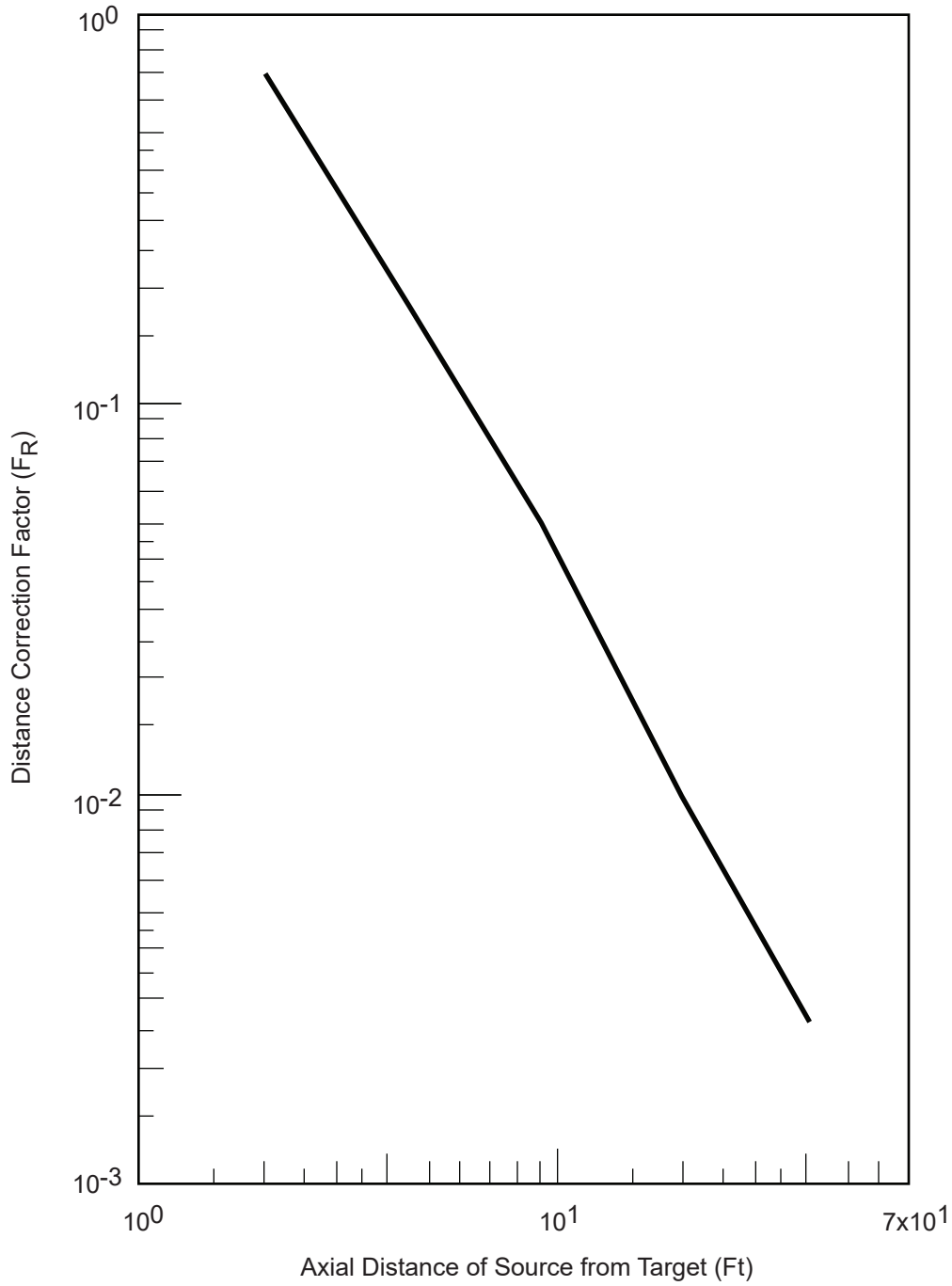

Configuration 3 of Figure J.C-1

Columbia Generating Station Final Safety Analysis Report	Distance Correction Factor for Targets Located Axially in Line with Source Piping		
	Draw. No. 970187.65	Rev.	Figure J.C-15

Attachment J.D

CALCULATION OF THE RADIATION

The standby gas treatment system (SGTS) filters are located in the reactor building (el. 572 ft) and function to process the radioactive contaminated gaseous effluent from the primary and secondary containment. In the event of a loss-of-coolant accident (LOCA) in the primary containment the SGTS will be actuated. The gaseous contaminants that leak out of the primary containment will be filtered by the SGTS. It will adsorb the iodines in the charcoal filters and the particulates in the prefilters and high-efficiency particulate air (HEPA) filters. Plateout in the primary containment of the iodines released from the core was considered in the radiation assessment of the SGTS. Depending on the radioactive source distribution and the primary containment leakage rate, the radioactive iodine concentration in the filters will be increasing with time as more and more is deposited on the filters. Main steam isolation valve (MSIV) leakage is also considered in the radiation dose calculations.

The purpose of this study was to evaluate the time dependent gamma radiation level for safety-related equipment located near the SGTS filters and in adjacent rooms post-LOCA.

The time-dependent activity concentration in each of the filters is first calculated. The time and energy-dependent gamma activity levels on the SGTS filters is developed by a combination of computer runs and hand calculations and is used as input to the QAD-P5A computer code to calculate the gamma radiation levels for the pieces of safety-related equipment located in the room. A discussion of the analysis follows.

J.D.1 DESCRIPTION OF THE STANDBY GAS TREATMENT SYSTEM FILTERS

Figure J.D-1 is a drawing of the SGTS filter train. The SGTS consists of two fully redundant filter trains, each of which consists of the following components in series:

a. A demister to remove entrained water particles in the incoming air stream;

b. Two banks of electrical coil heaters designed to limit the humidity of the incoming air to 70% at design flow during post-LOCA conditions;

c. A bank of prefilters to remove large particles from the airstream (Figure J.D-2);

d. A bank of HEPA filters to remove the remaining particulates from the airstream (Figure J.D-2);

e. Two 4-in. deep beds of charcoal adsorber filters, arranged as shown in Figure J.D-1, are designed to capture the elemental and organic halogens from the airstream. The dimensions of the charcoal filters are shown in Figure J.D-3; and

f. A second bank of HEPA filters, identical to that described in item d above. The function of this second HEPA filter bank is to capture contaminated charcoal dust which may escape from the charcoal filters.

Both SGTS filter units are located in reactor building el. 572 and are automatically actuated and become fully operational within 34 sec of the event of any of the following three isolation signals:

a. High radiation in the reactor building ventilation exhaust duct,
b. High drywell pressure, and
c. Low water level in the reactor vessel.

J.D.2 CALCULATION OF TIME-DEPENDENT FILTER ACTIVITY CONCENTRATION

The analysis of the time-dependent transport of the radioactivity from the primary containment to the SGTS filters and the activity concentration on each filter is based on the following assumptions:

a. The SGTS filters are assumed to be loaded by iodine at a rate based on atmospheric leakage from primary containment of 0.67 wt %/day. This is composed of 0.5% direct from primary containment leakage and 0.17% via the MSIV. This is based on the primary containment rated leakage flow rate and the calculated MSIV leakage (Reference J.7-40). The containment rated leakage flow rate is 0.5%/day. The MSIV leakage was originally determined to be 0.23%/day, but a reevaluation has resulted in a revision of the MSIV leakage to 0.17%/day as referenced in J.7-40. Since the revision resulted in a lower value the original analysis with MSIV leakage of 0.23%/day is conservative. Thus, the radiation zone calculations were not revised to reflect the MSIV leakage of 0.17%/day since the original analysis was conservative;

b. Straight exhaust through the filters, with no mixing or holdup in the secondary containment atmosphere, is assumed based on an NRC recommended assumption for the analysis for fission product control systems (Reference J.7-41);

c. The elemental iodine in primary containment plateout on primary containment surfaces until one part in 200 of the elemental iodine remain airborne (0.5% of the total iodine). This is consistent with Reference J.7-14;

d. The released halogen fraction is 50% of the core inventory. This halogen fraction is assumed to be composed of 95.5% elemental, 2% organic, and 2.5% particulate iodines. This is consistent with Reference J.7-14;

e. The particulate halogens will be homogeneously distributed within the prefilters and the HEPA filters, while the elemental and organic iodines will be homogeneously distributed within the two charcoal filters of the filter train. This is conservative and necessary because the time-dependent collection of iodines in the filters has not been defined. The homogenous assumption is reasonable; and

f. Leakage past the MSIVs discharges directly to the inlet of the operating SGTS filter unit. Therefore, it bypasses the secondary containment volume. This is conservative and necessary because the time dependent collection of iodines in the filters has not been defined. The homogenous assumption is reasonable.

The time- and energy-dependent gamma activity concentration in the SGTS filters was first investigated as discussed in Section J.5.3.3. This analysis was performed by a combination of computer analysis and hand calculations. The activity concentration of a halogen isotope inside a SGTS filter is changing with time due to the following three mechanisms:

a. Transport of activity from the primary containment and deposition of the filters due to air leakage,

b. Depletion of activity due to radioactive decay and plateout of elemental halogens inside primary containment, and

c. Increases in activity levels due to daughter fission product generation from radioactive decay of other isotopes.

The activity balance on the SGTS filters can be described by (from equation J.B-16, Attachment J.B)

$$\frac{d}{dt}(A_i) = Q_l C_{li}(t) - {}_i A_i + {}_j {}_j A_j \qquad \text{(J.D-1)}$$

leakage in - decay + growth

where

A_i = activity (iodine) deposited on the SGT filters
$C_{1i}(t)$ = airborne concentration of iodine isotope "i"
Q_1 = flow rate (volume) from the primary containment

As in Attachment J.B (equation J.B-1, J.B-2) the growth term is negligible.

$C_{1i}(t)$ is given by equation J.B-8 of Attachment J.B as

$$C_{1i}(t) = (S_{iH}(t)/V_1)\, f_H(t) \exp(-Q_1 t/V_1) \qquad \text{(J.D-2)}$$

V_1 is the volume of primary containment

$f_H(t)$ is defined by

$$f_H(t) = f_e\ e^{-\lambda p t} + f_p + f_o \quad \text{where } t \le t_p \qquad \text{(J.D-3)}$$

$$f_H(t) = \left(\frac{f_e}{200}\right) + f_p + f_o \quad \text{where } t \ge t_p$$

Integrating (J.D-2) gives the following, where B is a constant to be determined:

$$A_i(t) = Be^{-\lambda i t} + e^{-\lambda i t} \int e^{\lambda i t}\ Q_1 C_{1i}(t)\, dt \qquad \text{(J.D-4)}$$

$C_{1i}(t)$ is substituted into (J.D-4) from (J.D-2) to give

$$A_i(t) = Be^{-\lambda i t} + \frac{e^{-\lambda i t}}{V_1} \int Q_1\ S_{iH}(t)\ f_H(t)\ e^{\left(\lambda_i - Q_1/V_1\right)t} dt \qquad \text{(J.D-5)}$$

Substituting the definition of $S_{iH}(t)$ from equation J.B-5 of Attachment J.B, where $A_{1i}(0)$ is the original activity in primary containment

$$(S_{iH}(t)) = C_{1i}(0)\ e^{-\lambda i t}\ V_1 = A_{1i}(0)\ e^{-\lambda i t}$$

$$A_i(t) = Be^{-\lambda i t} + A_{1i}(0)\ e^{-\lambda i t} \int \frac{Q_1}{V_1}\ f_H(t)\ \exp\left[-(Q_1/V_1)^t\right] dt \qquad \text{(J.D-6)}$$

$f_H(t)$ consists of three chemical species: organic, particulate, and elemental iodine.
Equation (J.D-6) must be solved for each species, so the species will be separated at this point:

$$\theta_o(t) = f_o$$

$$\theta_p(t) = f_p \qquad \text{(J.D-7)}$$

$$\theta_e(t) = f_e \; e^{-\lambda_p t} \quad 0 \le t \le tp$$

$$\theta_e(t) = \frac{f_e}{200} \quad \text{where} \quad t_p \le t$$

$$f_H(t) = \theta_o(t) + \theta_p(t) + \theta_e(t)$$

To clarify the solution of (J.D-6), the following definitions are made:

$$X = -\lambda_p - q$$

$$q = \frac{Q_1}{V_1}$$

Since $\theta_e(t)$ has step-function changes, solutions to (J.D-6) require a series solution - one for both of the time bands:

$$0 \le t_p \le \infty$$

Organic Iodines

Equation (J.D-6) for all times t becomes

$$A_i(t) = Be^{-\lambda_i t} + A_{li}(0)\, q\, f_o e^{-\lambda_i t} \frac{e^{-qt}}{-q} \qquad \text{(J.D-8)}$$

At $t=0$, $A_i=0$, so

$$A_i(t) = + f_o A_{1i}(0) e^{-\lambda_i t} \left[1 - e^{-qt} \right] \qquad \text{(J.D-9)}$$

Since

$$A_{1i}(0)e^{-\lambda_i t} = S_{iH}(t)$$

from equation J.B-5 (from Attachment J.B), we define

$$A_i(t) = S_{iH}(t) \quad \phi_o(t) \qquad \text{(J.D-10)}$$

where

$$\phi_o(t) = + f_o\ (1 - e^{-q\,t})$$

$\phi_o(t)$ = fraction of organic halogens on the SGTS filters

Particulate Iodines

Particulate halogens are obtained in the same manner as organic halogens. The only difference is that f_o is replaced by f_p.

Elemental Iodines

For $0 \le t \le t_p$, equation (J.D-6) becomes

$$A_i(t) = Be^{-\lambda i t} + A_{li}\ (0)\ e^{-\lambda i t}\ q\ (e^{-\lambda p t}\ f_e)\ \ e^{-qt}\ dt \qquad \text{(J.D-11)}$$

since at $t = 0$, $A_i = 0$

$$A_i(t) = q\ \frac{f_e}{x}\ A_{li}(0)\ e^{-\lambda i t}\ (e^{xt}\ -1) \qquad \text{(J.D-12)}$$

For $t_p \le t$, equation (J.D-6) becomes

$$A_i(t) = Be^{-\lambda i t} + A_{li}\ (0)\ e^{-\lambda i t} \int q\ (\frac{f_e}{200})\ e^{-qt}\ dt \qquad \text{(J.D-13)}$$

Integrating, with initial condition of $t = t_p$

$$A_i = \frac{qf_e}{x}\ A_{li}\ (0)e^{-\lambda i t}\ p\ (e^{xt_p} - 1)$$

$$A_i(t) = f_e\ A_{li}\ (0)\ \exp -\lambda_i t\ \frac{q}{x}\ \left[\ (e^{xt}[tp] - 1) + \frac{x}{200\,q}\ (e^{-qt}[tp] - e^{-qt})\ \right] \qquad \text{(J.D-14)}$$

The activity on the SGTS filter may then be generally described by

$$A_i(t) = S_{iH}(t)\ \phi(t) \qquad \text{(J.D-15)}$$

where $\phi(t)$ is the fraction of released iodines located on the filters and is defined by

$$\phi(t) = \phi_o(t) + \phi_p(t) + \phi_e(t) \qquad \text{(J.D-16)}$$

where

$$\phi_o(t) = f_o\,(1 - e^{-q\,t})$$
$$\phi_p(t) = f_p\,(1 - e^{-q\,t})$$

$$e(t) = \begin{cases} F_e\ \dfrac{q}{x}\ (e^{xt} - 1) & (\text{For } 0 \le t \le t_p) \\ F_e\ \dfrac{q}{x}\ \left[(e^{xt}\ p_{-1}) + \dfrac{x}{200\,q}\ (e^{-qt}\ p_{-e}^{-qt})\right] & (\text{F or } t_p \le t) \end{cases}$$

J.D.3 CALCULATION OF RADIATION DOSE FROM THE STANDBY GAS TREATMENT SYSTEM FILTER

After the activity concentration in each filter segment is determined, the gamma radiation dose for safety-related equipment located in the SGTS filter room is determined by the use of computer code QAD-P5A (Reference J.7-10). The QAD-P5A modeling procedure as described in Attachment J.C is followed for this analysis. The following modeling assumptions were used:

a. Self-shielding of the filters is conservatively neglected because the density of the charcoal dust or the wire mesh (prefilter and HEPA filters) in the filters is low. Neglecting the self-shielding effect of the filters will not add too much conservatism to the results; and

b. Shielding due to the sheet metal filter housing is conservatively neglected due to computer code stability considerations. The shielding effect of the thin sheet metal filter housing is negligible.

One zone and four subzones were evaluated for the SGTS system and the five C1E/SRM components evaluated are

a. SGT-DV-1A3,
b. FPC-LIS-1A,
c. SGT-EHO-1B1,
d. SGT-MO-5B1, and
e. SGT-TE-6A1/7A1.

These targets are evaluated according to their proximity to the SGTS filters.

The time-dependent, gamma ray activity concentration as calculated using the method described in Section J.D.2 was used as input to the QAD-P5A model described in Attachment J.C. The dose rate results of this analysis were integrated numerically to give time-dependent, integrated doses. Table J.D-1 shows the direct gamma dose rate and integrated results for each of the five targets.

Table J.D-1

Direct Gamma Dose Rate and Integrated Dose Results
for Targets in the Standby Gas Treatment System Room

	FPC-LIS-1A			SGT-EHO-1B1			SGT-MO-5B1			SGT-TE-6Al/7A1	
Time (hr)	Dose Rate (rad/hr)	Integrated Dose (rad)		Dose Rate (rad/hr)	Integrated Dose (rad)		Dose Rate (rad/hr)	Integrated Dose (rad)		Dose Rate (rad/hr)	Integrated Dose (rad)
0	8.6E+02	4.3E+01		2.7E+02	1.4E+01		9.9E+02	5.0E+01		4.8E+04	2.5E+03
1	4.1E+03	2.3E+03		1.3E+03	7.3E+02		4.7E+03	2.6E+03		2.3E+05	1.4E+05
3	3.8E+03	1.0E+04		1.2E+03	3.3E+03		4.4E+03	1.2E+04		2.1E+05	5.8E+05
9	2.3E+03	2.9E+04		7.6E+02	9.3E+03		2.6E+03	3.3E+04		1.2E+05	1.6E+06
24	1.6E+03	5.8E+04		5.1E+02	1.9E+04		1.7E+03	6.6E+04		7.7E+04	3.1E+06
72	1.2E+03	1.2E+05		3.8E+02	4.0E+04		1.3E+03	1.4E+05		5.4E+04	6.3E+06
216	1.2E+03	3.0E+05		3.9E+02	9.5E+04		1.3E+03	3.3E+05		5.5E+04	1.4E+07
720	5.7E+02	7.5E+05		1.7E+02	2.4E+05		6.1E+02	8.1E+05		2.5E+04	3.4E+07
1440	7.6E+01	9.8E+05		2.3E+01	3.1E+05		8.1E+01	1.1E+06		3.3E+03	4.4E+07
2160	7.7E+00	1.0E+06		2.5E+00	3.2E+05		8.2E+00	1.1E+06		3.3E+02	4.6E+07
4320	1.0E-02	1.0E+06		6.4E-03	3.2E+05		1.0E-02	1.1E+06		2.3E-01	4.6E+07

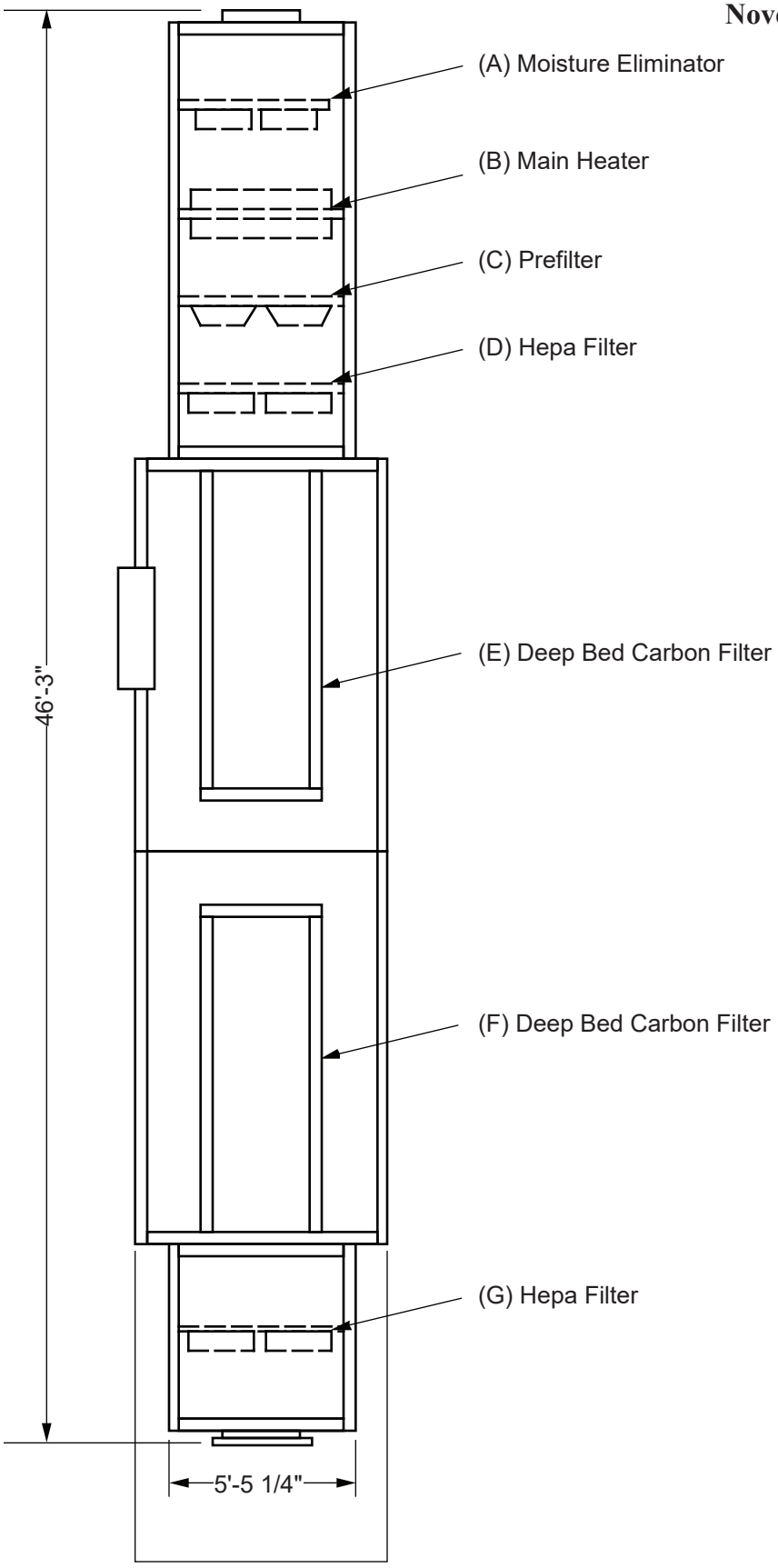

Columbia Generating Station
Final Safety Analysis Report

Standby Gas Treatment Filter

Draw. No. 970187.66	Rev.	Figure J.D-1

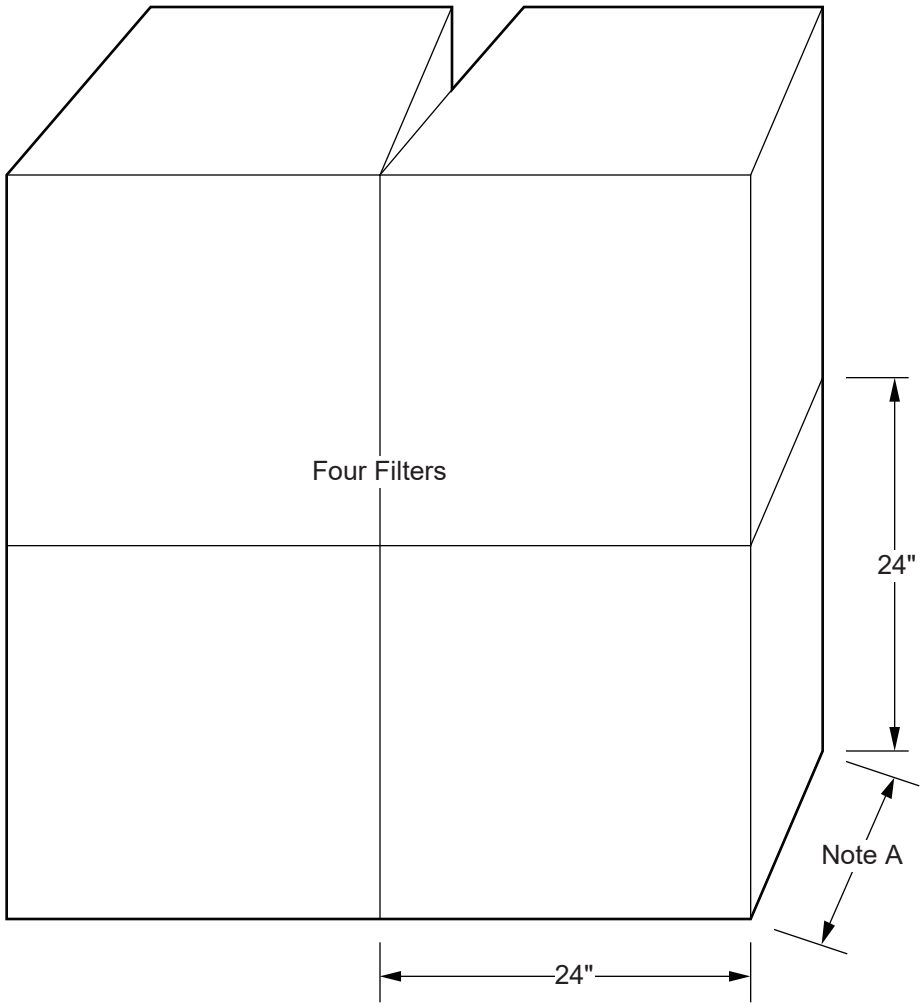

Note A: Prefilter 8"
HEPA Filter 11 1/2 "

Columbia Generating Station **Final Safety Analysis Report**	**Geometry of Prefilters and HEPA Filters**		
	Draw. No. **970187.67**	Rev.	Figure **J.D-2**

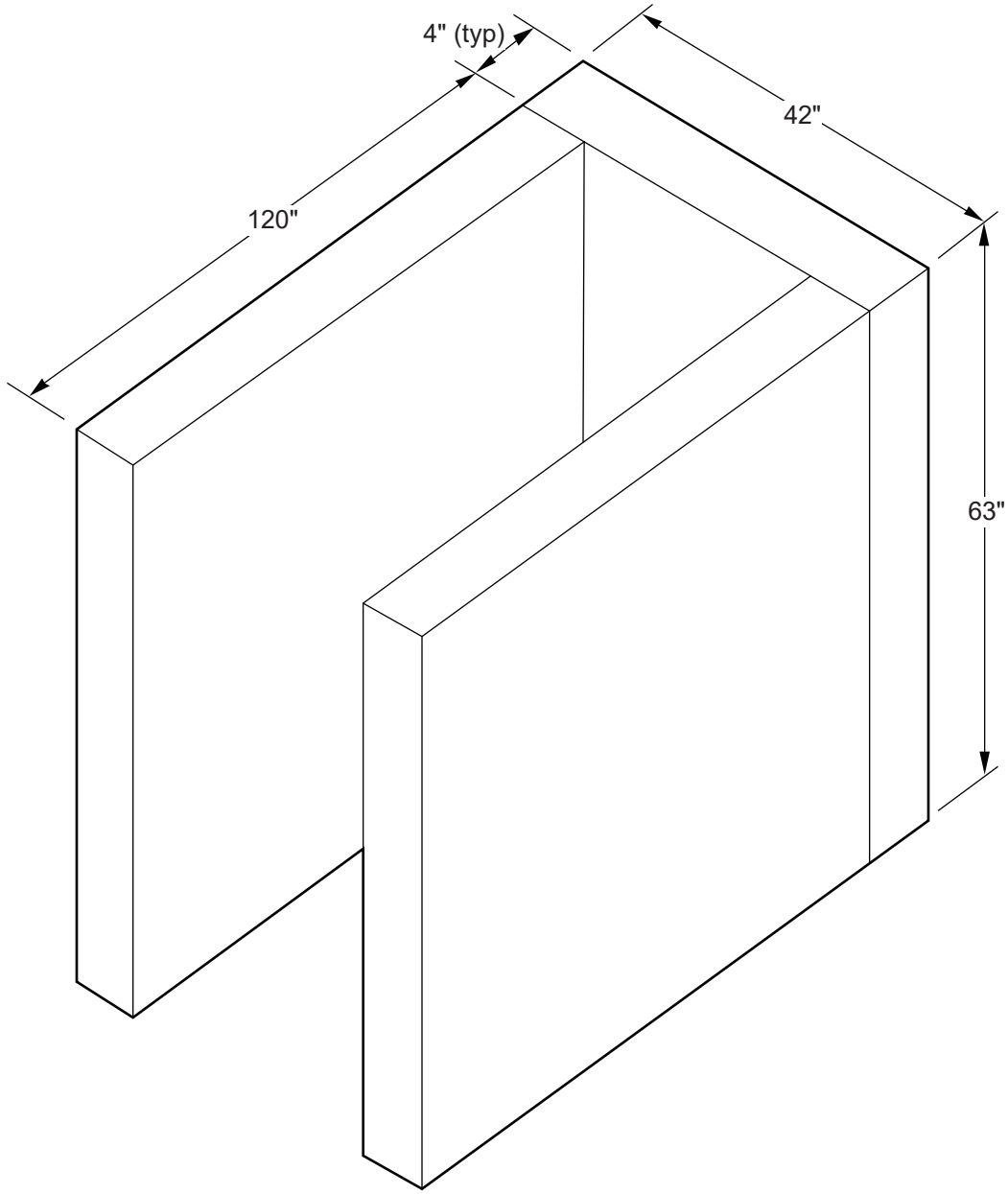

Not to Scale

Columbia Generating Station **Final Safety Analysis Report**	**Geometry of Charcoal Filters**		
	Draw. No. **970187.68**	Rev.	Figure **J.D-3**

Attachment J.E

BETA DOSE CALCULATION METHOD

The source volume used for the beta dose analysis in secondary containment is a sphere surrounded by a shell of sufficient thickness to stop all outside beta particles from entering the source volume. This spherical source volume is conservative for any generalized source volume shape. The dose at the center of the sphere is higher than the dose at any point of any generalized source of equal total volume.

The assumptions used in this analysis are as follows:

a. Atmosphere inside the equipment casing is identical to the atmosphere in the reactor building which is conservative because there will be some actual delay in transport of the gaseous fission products into the equipment;

b. The initial beta source term used was 100% of core noble gases and 50% of core halogens based on NUREG-0588, Revision 1 and NUREG-CR/0009 (References J.7-29 and J.7-34);

c. Daughter products of the airborne noble gases and halogens are included in the calculation of the airborne dose. This is conservative and was required by the use of ORIGEN2 as a source code (Reference J.7-8);

d. Plateout of halogens inside primary containment was utilized as allowed in accordance with Reference J.7-34. The dose contribution of fission products plated out on equipment casings was neglected. This is based on the NRC recommended assumptions (Reference J.7-34). The deletion of dose contributions from fission products plated out on equipment casings is acceptable, since equipment surface areas are small relative to the available containment surface area. In addition, the beta radiation emitted from plated out fission products would be absorbed in the equipment casing and, hence, would not affect internal components;

e. The primary to secondary leak rate is 0.5% of primary containment, wt %/day is consistent with the assumptions established in Reference J.7-2;

f. The standby gas treatment system (SGTS) operates at the minimum flow of 2430 scfm based on the SGTS flow rate assumption of one reactor building air change per day;

g. Primary to secondary leakage is homogeneously mixed in the secondary containment atmosphere consistent with the NRC-recommended assumptions used for the calculation of doses inside primary containment (Reference J.7-2);

h. No halogen plateout in the secondary containment was assumed; and

i. A spherical volume and equipment casing will be used which is conservative.

The beta dose to equipment is dependent on the internal volume size of the piece of equipment. The beta dose is determined through the use of any energy dependent geometry factor and a ratio of the internal equipment volume to an infinite cloud. The beta dose contribution is excluded from the total integrated radiation doses shown on the radiation zone maps and tables for the C1E* equipment in the reactor building. If determination of a beta dose contribution to a C1E* component is required then a calculation to determine the internal volume size and perhaps the angle of incidence of the beta cloud to the sensitive component is performed. The results of the beta calculation are then included in the equipment qualification files for that beta sensitive equipment.

The beta calculation is determined by the airborne dose at the center of the spherical source as a function of the volume of the sphere.

The variation of beta dose rate from a typical beta energy distribution in a one-dimensional absorbing medium can be approximated by the formula:

$$D(X) = A \exp(-\mu_E X) \qquad \text{(J.E-1)}$$

where

$D(X)$	=	dose at a point X
A	=	constant
X	=	position in the material
μ_E	=	a parameter that depends on beta energy

This relationship holds approximately up to the point where all beta particles are absorbed. This point is called the range of the beta particles. The range of a beta particle is dependent upon the energy of the beta particle and is denoted r_E.

Both of the parameters μ_E and r_E may be determined by empirical formulas given below, based on the maximum energy of the beta particles, and approximately independent of the absorbing medium.

* Environmental qualification (EQ) of safety-related mechanical equipment has been eliminated from the overall Columbia Generating Station EQ program (SRM).

$$\mu_E = 17\rho\,(E_{max})^{-1.14} \qquad \text{(J.E-2)}$$

$$^{r}E = (0.412/\rho)\,E^{n} \text{ for } 0.01 \le E \le 3 \qquad \text{(J.E-3)}$$

$$= (0.530E - 0.106)/\rho \text{ for } 2.3 \le E \le 20 \qquad \text{(J.E-4)}$$

ρ is material density (in g/cm^3)
E is energy of beta particle (in MeV)
μE is in cm^{-1}
r_E is in cm
n is 1.265 - .0954 LnE

The dose at a given point from a single beta source is now transformed into a dose from a uniform concentration of airborne sources which extend from radius zero to radius r. K is a constant.

$$D(r) = K(1 - \exp(\mu_E r)) \qquad \text{(J.E-5)}$$

This relationship is valid for $r \le r_E$. At $r \le r_E$, none of the beta particles originating beyond r_E reach the target point. Hence, at this radius, an effective infinite medium for airborne beta radiation has been reached. The dose from a volume such that $r \ge r_E$ is equal to the dose from an infinite volume, which is denoted D_∞.

The dose as a function of volume radius is thus found to be given by the dual relation:

$$D(r) = D_\infty \frac{(1 - \exp(-\mu_E r))}{(1 - \exp(-\mu_E r_E))} \qquad 0 \le r \le r_E \qquad \text{(J.E-6)}$$

This relation may be transformed to a function of volume by noting that $V = 4\pi r^3/3$.

Since μ_E and r_E vary for each beta energy, this equation cannot be solved analytically for the case of a mixture of many beta energies - which is the case at hand. However, since D_∞ for each beta energy is known (from the calculation of the semi-infinite source), $D_{E(v)}$ for each beta energy at a given volume may be determined. All contributions to the total dose at a given volume are then added together.

The volumes evaluated in this analysis were 10^3, 10^4, 10^5, and 10^6 cm^3. Table J.E-1 summarizes the semi-infinite volume for each beta energy group. Table J.E-1 also indicates the beta dose reduction factor for each of the beta energy groups at the finite beta volumes of interest. A plot of the integrated 6-month doses for these finite beta volumes is shown in Figure J.E-1. These results reflect the reduction in beta air dose from the semi-infinite

medium air dose to a finite volume medium air dose. The integrated beta infinite airborne dose for the reactor building as a function of time post-loss-of-coolant accident (LOCA) is shown in Figure J.E-2.

Table J.E-1

Dose Rate Reduction Factors for the Post-Loss-of-Coolant Accident
Beta Energy Groups at Finite Volumes

Energy Group (MeV)	V_E (cm^3)	$\frac{D(V)}{D_{oo}}$ for Volumes			
		10^3 cm^3	10^4 cm^3	10^5 cm^3	10^6 cm^3
0.02 - 0.10	120.0	1.0	1.0	1.0	1.0
0.10 - 0.20	4.08×10^5	0.486	0.763	0.960	1.0
0.20 - 0.40	8.58×10^6	0.260	0.478	0.755	0.955
0.40 - 0.70	1.36×10^8	0.127	0.254	0.468	0.744
0.70 - 1.0	1.04×10^9	0.0695	0.144	0.284	0.513
1.0 - 1.3	3.46×10^9	0.0467	0.0979	0.199	0.380
1.3 - 1.6	8.18×10^9	0.0348	0.0735	0.152	0.299
1.6 - 2.0	1.59×10^{10}	0.0276	0.0585	0.122	0.244
2.0 - 2.5	3.20×10^{10}	0.0215	0.0457	0.0960	0.195
2.5 - 3.0	6.47×10^{10}	0.0167	0.0356	0.0752	0.155

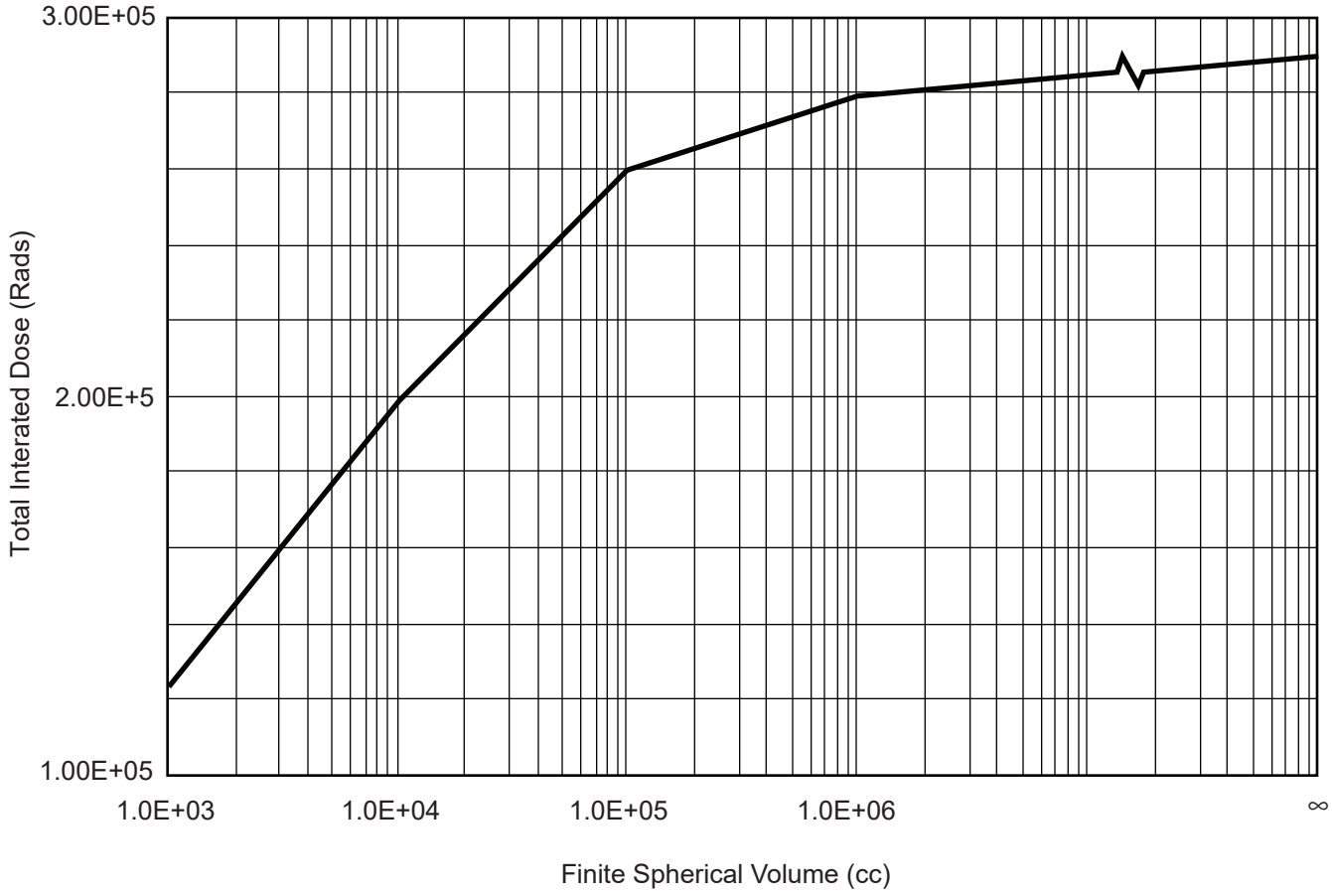

Columbia Generating Station Final Safety Analysis Report	Total Integrated Beta Cloud Airborne Dose as a Function of Size		
	Draw. No. 960222.64	Rev.	Figure J.E-1

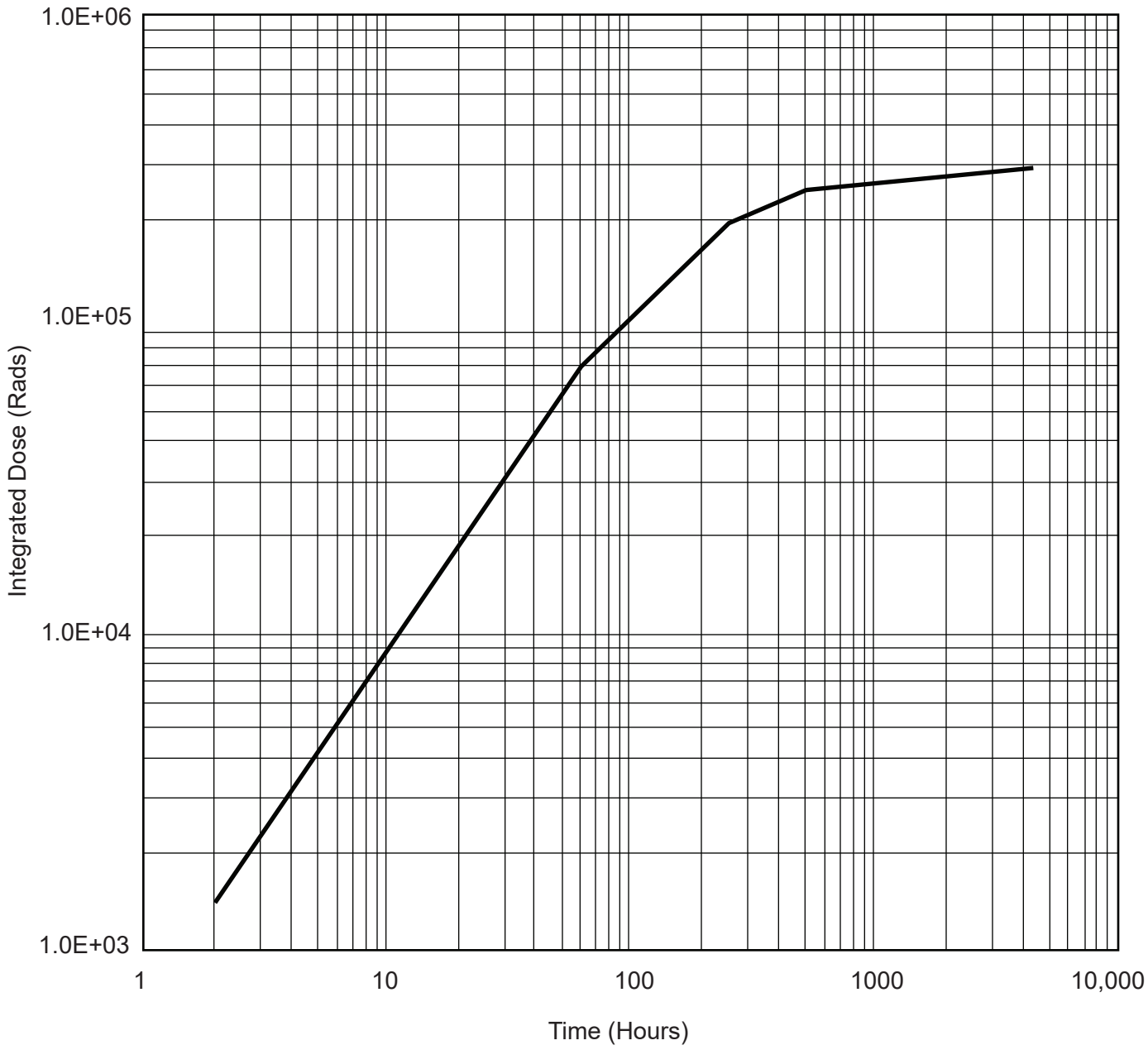

Columbia Generating Station Final Safety Analysis Report	Integrated Beta Infinite Airborne Dose for the Reactor Building		
	Draw. No. 960222.65	Rev.	Figure J.E-2

Attachment J.F

PRIMARY CONTAINMENT ANALYSES

J.F.1 STATEMENT OF PROBLEM

It is required by NRC regulations (NUREG-0737 and NUREG-0588, References J.7-5 and J.7-2) that safety-related equipment be qualified to withstand the radiation environment in which they are located for the 40 years of normal plant operation plus for the 6 months following a postulated design basis loss-of-coolant accident (LOCA). This attachment presents a summary of the evaluation of the radiation environment inside the primary containment of Columbia Generating Station (CGS) during normal plant operation and for the 6 months following the postulated LOCA. This attachment also calculates the maximum integrated dose due to those radiation sources.

J.F.2 BASIC APPROACH

NUREG-0737 offers two approaches for evaluating the qualification of equipment within primary containment; pressurized versus depressurized reactor coolant system, with the more conservative to be considered the base case. Both cases assume the same source (100% noble gas, 50% halogens, and 1% particulates of the core inventory). The difference between the two is that in the pressurized case, the source is assumed to remain in the reactor coolant system for the first 17 hr (Reference J.7-44) after the accident and then is assumed to be released into the primary containment. In the depressurized case, there is assumed to be an instantaneous release of 100% of the core noble gases and 50% of the core halogens to the free volume of the primary containment (Reference J.7-45). It is also assumed that 50% of the core halogens and 1% of the core solids are released to the reactor coolant and the suppression pool. This causes some double counting of halogens and hence some conservatism, since only 50% of the core halogens need ever be considered for release after a LOCA.

Both scenarios, the pressurized and depressurized were evaluated and it was determined that for CGS the depressurized case results in higher integrated doses (References J.7-46, J.7-50, and J.7-54). Therefore, it was considered to be the base case.

Due to the large number of C1E* components inside primary containment, it was deemed impractical (from both scheduling and cost considerations) to calculate the integrated dose to each piece of equipment. Therefore, it was decided to calculate the worst point dose from each of the major sources in the drywell and wetwell, and then to sum these for a conservative estimate of the total integrated dose. This methodology for determining a worst-case dose for equipment in the drywell is not valid for the region inside the sacrificial shield wall or under

* Environmental qualification (EQ) of safety-related mechanical equipment has been eliminated from the overall CGS EQ program (SRM).

the reactor pressure vessel. A point-specific radiation dose calculation is required for all components present in either of these two regions.

J.F.3 DRYWELL

The integrated dose from each of the major sources to the drywell is tabulated in Table J.F-1. All values are the maximum dose for each source considered. Since the maximum dose does not occur at the same location or the same time from all sources, it is not appropriate to sum them to obtain the total integrated dose. All of the maximum doses calculated cannot be present for a particular accident. The highest dose (7.4×10^7) is calculated for a depressurized reactor coolant system.

This dose is conservative since all of the source contributors summed do not have the maximum dose at the same location. If it were determined that certain pieces of equipment could not withstand the maximum dose, a more detailed calculation would unquestionably result in an integrated dose of lower than 7.4×10^7 rads. A lower bound for the more detailed calculation would be about 10^7 rads.

One major factor regarding the airborne contribution needs to be addressed here to understand the results in Tables J.F-1 and J.F-2. Of the total airborne contribution (3.5×10^7 rads) slightly over 50% of it is due to photons which have an energy of less than 0.045 MeV. These photons are readily attenuated. As such, virtually any amount of shielding will result in a reduction by a factor of approximately two in the total airborne dose. Such an example is the smallest size conduit used in containment which has a wall thickness of 0.179 in.

This is not the only conservatism in the calculation; however, it is the most noteworthy. The following section addresses the individual contributors, assumptions, sources, models, etc., used to calculate the integrated dose.

J.F.3.1 Sources

There are six major radiation sources to the equipment in the drywell. Two of these sources are present during normal operation and four sources are present after a LOCA. They are

	Normal Ops	Sources
Rx Core	Normal Ops	Neutrons emanating directly from the reactor core and the resultant capture gammas.

Systems	Normal Ops	The following systems are the main sources of radiation during normal plant operation: a. Residual heat removal (RHR) system, b. Reactor water cleanup (RWCU) system, c. Main steam (MS) system, and d. Reactor recirculation (RRC) system.
Systems	Post-LOCA	In addition to the systems considered under normal operation, (except for the MS) the following systems were also considered post-LOCA: a. High-pressure core spray (HPCS), b. Low-pressure core spray (LPCS), and c. Reactor core isolation cooling (RCIC).
Airborne	Post-LOCA	Airborne radiation from radionuclides (noble gases and halogens) which are postulated to be released into the primary containment atmosphere following a LOCA.
Plateout	Post-LOCA	Plateout on surfaces within containment. This consists of radioactive iodines which are initially airborne and subsequently plateout (Reference J.7-34).
Wetwell	Post-LOCA	The radionuclides contained within the wetwell as a result of the blowdown after the accident.

J.F.3.1.1 Reactor (Normal Operation - Drywell)

There exists a general radiation field inside primary containment due to normal plant operation. Part of this field is due to neutron leakage from the reactor core. A fraction of those neutrons penetrate the reactor vessel into the reactor cavity. Some will traverse vertically while others will penetrate the sacrificial shield wall. In addition, secondary gammas will be generated from neutron interaction with materials along their path.

ANISN, a one-dimensional discrete ordinates computer code was used to calculate the transport of these neutrons, and the generation of secondary gamma rays (Reference J.7-55).

The total neutron and gamma dose rates outside the sacrificial shield wall at core mid-plane are calculated to be

a. 5.7 rad/hr neutron, and
b. 50 rad/hr gamma

An estimate was made to determine the axial variation of the dose rate based on geometric and material attenuation factors. The approximate dose rate reduction factors are shown in Table J.F-3 as a function of distance from the core mid-plane.

J.F.3.1.2 Systems (Normal Operation - Drywell)

During normal operation, a radiation field exists within containment due in part to radioactivity contained within the piping inside primary containment.

The single major source within the piping is ^{16}N [produced by the (n,p) ^{16}O ^{16}N reaction within the core]. The dose from other sources such as fission products, corrosion products, etc., are too small compared to ^{16}N to be considered.

Calculations were done to determine the dose rate to which equipment was exposed. The results indicated that the dose rate ranged from a high of 35 rad/hr to a low of 0.36 rad/hr. These calculations were performed with KAP-V and QAD-BR. They took into account the following systems: RHR, RWCU, MS, and RRC (References J.7-47, J.7-48, and J.7-49). The ^{16}N source used was 40 μCi/g (FSAR Table 11.1-4) maximum. This is the source strength of the ^{16}N in the coolant exiting the reactor. Based on this initial source, the source strength for the pipes of the systems considered was evaluated, and the dose calculations were then performed.

J.F.3.1.3 System (Post-Loss-of-Coolant Accident) - Drywell

The dose rate calculations for systems post-LOCA were performed using a method similar to that used for the systems under normal operation with two exceptions. The first was that in addition to the RHR, RWCU, and RRC systems, the HPCS, LPCS, and RCIC systems were also included. The second exception was that a different source was used (References J.7-48 and J.7-49). After a LOCA, the predominant source past the first minute or so is the assumed fission product release from the core. The ^{16}N inventory, with a 7.1-sec half-life decays away in less than a minute once the (n,p) ^{16}O ^{16}N reaction stops occurring (after the reactor shuts down).

For the base case, i.e., the depressurized case, it was assumed that 50% of the core halogens and 1% of the core solids were released and distributed within the suppression pool and the reactor coolant systems (References J.7-51, J.7-52, and J.7-53). As noble gases were produced by the radioactive decay of the halogens, they were discounted on the premise that

they would be released from the liquid to the gas rapidly. The released inventory is then decayed for 37 discrete time intervals out to 6 months (these are given in Table J.F-7). An average source strength is then calculated for the 6-month period. The source strength is given in Table J.F-4.

J.F.3.1.4 Airborne - Drywell

A nonmechanistic accident scenario was postulated in calculating the airborne source. It was assumed that after 1000 days of operation at 3556 MWt (105% of core power), 100% of the noble gases and 50% of the halogens contained within the reactor core are instantaneously released. After the release, no additional contribution of either noble gases or halogens is considered. Also, plateout of halogens is considered (see Section J.F.3.1.5). The average airborne source strength is given in Table J.F-5.

The above source is calculated via the ORIGEN2 computer code. After the source strength was determined, the dose rate was calculated using the QAD-CG computer code. Details of the model and the calculation are discussed in Section J.F.5. The value for the airborne contribution presented in Table J.F-1 represents the dose rate at a point within the drywell which is predominantly surrounded by air. This point was chosen because of the absence of structural steel, piping, etc., surrounding the dose point. This would result in an upper limit dose rate which could be expected to occur in the drywell.

The effect of the shielding afforded by the structural steel, piping, etc. (i.e., "shadow shielding"), within containment was considered. Advantage was taken of "shadow shielding" when considering the contribution of the more distant airborne sources (References J.7-48 and J.7-49). This significantly reduces the dose rate compared to the case where "shadow shielding" is not employed. See Section J.F.5 for modeling of "shadow shielding."

J.F.3.1.5 Plateout - Drywell

The basis for determining the plateout source is 50% iodine inventory released after 1000 days irradiation at a power level of 3556 MWt. However, the plateout source is only those iodines which are removed from the airborne source and assumed to plateout on the surfaces within containment. As such, plateout removes sources from the airborne source, and this was accounted for in the calculations. It was assumed, however, that the noble gases generated by the decay of the plated out halogens (I $\rightarrow$ Xe and BR $\rightarrow$ KR) are instantaneously released and are mixed within the free volume of the drywell. In this manner, both the airborne and plateout sources are determined with no "double counting" of nuclides. The plateout source is given in Table J.F-6.

When the halogens are initially released, not all of them are considered available to plateout. Of the halogens released, 2.0% are in the form of organic compounds, and 2.5% are in the form of particulates (Reference J.7-2); and both of these forms are assumed not to plateout.

The remaining 95.5% are considered to be in an elemental state of which one-two hundredth remain airborne and the rest plateout. Therefore, no more than 95% of the released halogens can ever plateout. The plateout was assumed to occur with an effective deposition velocity of 0.05 cm/sec. This translated into an effective half-life of 1.01 hr^{-1} (References J.7-34 and J.7-45). Given this half-life, the limit of a reduction of a factor of 200 is attained in slightly over 5 hr. After that time, the percentage of plated out halogens remains constant at 95%.

The dose calculations were performed with the computer code QAD-CG, incorporating a model similar to that used for the airborne dose. See Section J.F.5 for discussion of model and calculations.

Initial calculations were performed with the total plateout being distributed over: (1) the drywell lateral surface, top, and bottom; (2) inner, outer and top surfaces of the sacrificial shield wall; and (3) heat reflector of pressure vessel surface. Given this distribution area, the maximum dose rate calculated was 7.04 x $l0^3$ rad/hr. However, when the remaining surface areas within containment (i.e., equipment, piping, structural steel, etc.) were considered, the area over which the source would be plated out increased sevenfold. A counter-balancing effect to this reduction in plated out concentration was that the source would be more universally distributed around any given receiver. It was estimated that the net effect would reduce the calculated maximum dose rate by a factor of approximately three.

It is noted that the energy spectrum for the plateout source is significantly harder than that of the airborne. As such, the comments in Section J.F.3 regarding low energy photons are not completely applicable.

J.F.3.1.6 Wetwell - Drywell

The wetwell was also considered as a source to the drywell. However, due to distance, self-attenuation, and the available shielding from the 2-ft-thick diaphragm floor, its contribution to the drywell was negligible.

It was assumed that 50% of the halogens and 1% of the particulates from the core were entrained in the water in the suppression pool. This is the same source used for the systems post-LOCA. The air space volume above the suppression pool was assumed to have the same volumetric source strength as the drywell air space. These are conservative premises since only a total of 50% of the core halogens are assumed to be released after the accident.

J.F.4 WETWELL

The results for the wetwell are given in Table J.F-2. Doses were calculated for detector points both within the suppression pool as well as in the free volume above it using QAD-CG, applying the same modeling techniques as was used in the drywell.

With regard to the airborne contribution, the volumetric source strength is the same as the drywell airborne source and the comments in Section J.F.3.1 regarding the low-energy photons applicability to the wetwell.

There does exist some double counting of nuclides in the wetwell analysis. The airborne source is 100% noble gases and 50% halogens, released into the containment (wetwell and drywell) free volume. For the suppression pools the source is 50% halogens and 1% particulates. Since only 50% of the total core halogens are assumed to be released after an accident, they are double counted (the effect is small, however, because of the shielding offered by the suppression pool water.) Another conservatism in the airborne source in the wetwell is that, since the path for the wetwell airborne sources is via the downcomers and then up through the suppression pool, some halogens are expected to be entrained in the water during this transfer (this was not considered in the calculation.) The result would have been a smaller airborne source and in turn a smaller dose.

J.F.4.1 Sources

There are three sources of radiation to the equipment in the wetwell, all of which are present only after an accident.

a. Airborne

The airborne source is present as a result of the initial blowdown into the suppression pool via the downcomers,

b. Plateout

Plateout of halogens onto the surfaces in the wetwell (i.e., containment, downcomers, etc.), and

c. Suppression Pool

The radionuclides contained within the suppression pool as a result of the blowdown after the accident.

J.F.4.1.1 Airborne - Wetwell

The airborne source, on a specific volume basis, is equal to the airborne source in the drywell (i.e., 100% noble gas and 50% halogen released into the total primary containment immediately following a LOCA). However, the amount of “shadow shielding” within the wetwell is much less than in the drywell. Hence, the contribution from sources further away is greater. This factor accounts for the increased dose rate in the wetwell with respect to the

drywell (due to airborne sources). Dose calculations in the wetwell were done in similar manner as for the drywell (i.e., using QAD-CG).

J.F.4.1.2 Plateout - Wetwell

As in the drywell, the source of the plateout in the wetwell is the halogens. However, the area available for plateout is smaller in the wetwell than the drywell. This results in a dose rate in the wetwell slightly more than double that in the drywell.

J.F.4.1.3 Suppression Pool - Wetwell

The source in the suppression pool was assumed to be 50% of the halogens and 1% of the particulates instantaneously released from the core into the pool and the reactor coolant system. It is further assumed that as noble gases are produced by the decay of the halogens (I→Xe and Bγ→Kγ), they "bubble out" of the pool, hence they are not considered a source term. Dose rates both in the suppression pool as well as in the wetwell free volume were calculated using QAD-CG.

J.F.5 QAD-CG MODEL

The QAD-CG computer program was used to calculate dose rates for both the airborne source as well as the plateout. In both cases, i.e., airborne and plateout, similar modeling techniques were used. This section defines the modeling used in both calculations (with only the drywell used for illustrative purposes).

The QAD-CG computer code makes use of a geometry package, which allows the user to model a calculation with the use of predetermined geometric bodies. The user defines a set of geometric "bodies" (boxes, truncated cones, spheres, cylinders, etc.) and using these "bodies," the user defines "zones" by intersection or forming unions of them to build the shapes desired in a manner analogous to "intersections" and "unions" when one deals with sets. The model is done three-dimensionally thereby allowing the user considerable flexibility. These "zones" are then what constitute the computer model. The parts of "bodies" that are not used have no effect on the model.

As an example, a dumbbell could be defined as the union of three "bodies": two spheres and a long, thin cylinder between them (see Figure J.F-1). Likewise, a hemisphere could be formed by intersection of a sphere with a box (see Figure J.F-1). In this manner, a complex model can be defined.

In our case, the basic model was defined as a truncated cone (approximating the containment shell) and two cylinders (approximating the sacrificial shield wall and the reactor vessel). Figure J.F-2 illustrates this in a sectional view. The free volume of the drywell was compartmentalized into cubes, 7 ft on a side. These cubes were formed by intersection of a

series of tall rectangles, which are 7 ft on a side in cross-section, with cylinders at 7-ft high intervals. Each 7-ft high cylinder constitutes the elevational boundaries of what is referred to as a "layer" below. Combining these "bodies" appropriately one winds up with a truncated cone (containment) with two cylinders (i.e., sacrificial wall and reactor vessel) and the remainder of the volume forced with cubes (except on the boundary of the cone or cylinders). Figure J.F-3 illustrates this model, while Figure J.F-4 illustrates how the layer from el. 513 ft 6 in. to el. 520 ft 6 in. is modeled.

All major structures, pipes (6 in. and above), hangers, etc., within the drywell were then located, and the mass of steel in each cubicle determined. These were translated into average densities such that each cube had an average density assigned to it. These are illustrated on Figures J.F-5 to J.F-9 for the lower five layers; for the purpose of clarity, the densities shown are much cruder than the 41 used in the code. In those cubicles which are noted to have zero density, the density of air was assumed.

In Figures J.F-7 to J.F-9 a large void (air only) exists in the southwest (fourth) quadrant in layers 3 and 4. It was in this region that the airborne dose rate was calculated. This region provides us with a volume which is large enough so that the "shadow shielding" (smearing discrete shielding within a cubicle into an average density in the cubicle) beyond its boundary is justified.

Several runs were made using this model with various source volumes. Three runs were made placing the source terms within the elevational boundaries of layers 3, 4, and 5, respectively, and another run was made by placing the source from the lower elevational boundary of layer 1 up to the upper elevational boundary of layer 2. It was noted that $>95\%$ of the total dose contribution from these five layers came equally from layers 3 and 4. In other words, the further away the source layer, the smaller the contribution. Also, shadowing shielding in layers 1 and 2 provided sufficient attenuation as to make the contribution to the total dose negligible. The same is true also for all layers above layer 5.

Plateout was calculated in a similar manner, increasing the source until successive contributions became negligible. For the plateout, the dose point was taken near the sacrificial shield wall. Other points were also considered, but the dose rate near the sacrificial shield wall was found to be the maximum. Again, the dose point was taken between layers 3 and 4 to maximize the dose rate.

J.F.6 CODES

J.F.6.1 FSPROD

FSPROD is a computer program which calculates the inventory and activity of radioactive fission products, produced from the thermal fission of ^{235}U, as a function of fission rate and decay time after fission. The program is used in establishing the gross and specific gamma and

beta activity of those fission products. The calculation incorporates 123 fission product nuclides and is based on Perkins and King data.

J.F.6.2 ORIGEN2

ORIGEN2 is a point depletion and decay computer code for use in simulating nuclear fuel cycles and calculating the nuclide composition of materials contained therein. The code represents a revision and update of the original ORIGEN computer code. The general function of the ORIGEN2 computer code is to calculate the nuclides present in various nuclear materials by determining the buildup and depletion of nuclides during irradiation and decay. The code can also account for reprocessing (i.e., chemical separation) and continuous feed, removal, and accumulation of nuclear materials.

J.F.6.3 QAD-BR

QAD-BR is a point kernal computer code designed to evaluate gamma penetration of various shield configurations. It is a modification of QAD-P5A; i.e., it has no capability for neutron calculations. The program provides an estimate of the uncollided and collided gamma flux, dose rate, energy deposition, and other quantities which result from a point-by-point representation of volume-distribution source of radiation.

J.F.6.4 QAD-CG

QAD-CG is also a modification of the QAD-P5A computer program. It is similar to QAD-BR in application with the major difference being in the geometry description. QAD-CG makes use of a combinatorial geometry package originally developed for MORSE. It is one of the more versatile geometry packages to be available in the QAD family of computer codes.

J.F.6.5 KAP-V

KAP-V is a hybrid of the QAD computer code. Analytically, it is identical to QAD as it is a point kernal code. The major differences are changes in input allowing more flexibility in running successive cases. It also has internal libraries for attenuation and buildup data which can be used by default for convenience.

J.F.6.6 ANISN

ANISN is a one-dimensional Sn transport code with anisotropic scattering. It allows for the solution of the transport equation for neutrons and photons using the discrete ordinate method.

Table J.F-1[a]

Integrated Dose in Drywell

Source	Maximum Average Dose Rate[b] (rad/hr)	Exposure Time	Dose[b] (rad)
Reactor	5.6×10^{1}	32 years[c]	1.6×10^{7}
Systems - normal	3.5×10^{1}	32 years[c]	9.9×10^{6}
Systems - LOCA	---	6 months	3.2×10^{6}
Airborne	---	6 months	3.7×10^{7}
Plateout	---	6 months	1.0×10^{7}
Suppression pool	---	6 months	$< 4.5 \times 10^{4}$

[a] Not valid for regions inside the sacrificial shield wall or under the reactor pressure vessel (a point specific radiation calculation is required for components in these two regions).

[b] Maximum dose rate from individual contributors does not necessarily occur at the same location or for the same accident.

[c] (40-year plant life) x (0.8) availability to account for down time.

Table J.F-2

Integrated Dose in Wetwell

Source	Maximum Average Dose Rate[a] (rad/hr)	Exposure Time	Dose[a] (rad)
Dose above suppression pool			
Airborne	1.8×10^4	6 months	8.2×10^7
Suppression pool	2.0×10^2	6 months	9.1×10^5
Plateout	2.7×10^3	6 months	1.2×10^7
Dose within suppression pool			
Airborne	2.9×10^2	6 months	1.4×10^6
Suppression pool	5.5×10^2	6 months	2.5×10^6

[a] Maximum dose rate from individual contributors does not necessarily occur at the same location.

Table J.F-3

Approximate Dose Rate Reduction Factor
Versus Distance from Core Mid-Plane
for Reactor Integrated Dose

Distance (ft)	Reduction Factor
0	1.0
5	0.5
10	0.02
15	1×10^{-5}

Table J.F-4

Suppression Pool and System
(Loss-of-Coolant Accident) Liquid Source Terms
0-6 Month Average After Loss-of-Coolant Accident

MeV	MeV/sec	MeV/cm^3-sec[a]
0.015	1.8E+14	4.4E+4
0.025	3.5E+14	8.5E+4
0.0375	4.8E+14	1.2E+5
0.0575	1.4E+14	3.5E+4
0.085	5.8E+14	1.4E+5
0.125	2.2E+15	5.3E+5
0.225	4.0E+15	9.6E+5
0.375	4.8E+16	1.2E+7
0.575	5.5E+16	1.3E+7
0.85	7.2E+16	1.7E+7
1.25	1.5E+16	3.7E+6
1.75	1.8E+16	4.3E+6
2.25	2.1E+15	5.1E+5
2.75	9.1E+14	2.2E+5
3.5	1.1E+14	2.6E+4
5.0	7.4E+13	1.8E+4

[a] Volume considered was that of the suppression pool plus that of the reactor coolant system.

Table J.F-5

Airborne Source Terms
0-6 Month Average After Loss-Of-Coolant Accident

MeV	MeV/sec	MeV/cm^3-sec[a]
0.015	2.5E+14	2.5E+4
0.025	2.1E+14	2.1E+4
0.0375	6.9E+15	7.1E+5
0.0575	3.0E+13	3.0E+3
0.085	1.4E+16	1.4E+6
0.125	3.7E+13	3.8E+3
0.225	4.4E+15	4.5E+5
0.375	3.0E+15	3.1E+5
0.575	4.0E+15	4.1E+5
0.85	3.2E+15	3.2E+5
1.25	3.4E+15	3.5E+5
1.75	2.6E+15	2.7E+5
2.25	3.9E+15	4.0E+5
2.75	6.7E+14	6.9E+4
3.5	2.1E+14	2.2E+4
5.0	9.5E+13	9.7E+3

[a] Volume considered was total; i.e., drywell plus wetwell free volume.

Table J.F-6

Drywell Plateout Source Terms
0-6 Month Average After Loss-Of-Coolant Accident

MeV	MeV/sec	MeV/cm^3-sec[a]
0.015	3.6E+13	6.3E+5
0.025	1.8E+14	3.2E+6
0.0375	5.4E+13	9.5E+5
0.0575	2.0E+13	3.6E+5
0.085	3.2E+14	5.7E+6
0.125	1.9E+13	3.4E+5
0.225	2.8E+15	4.9E+7
0.375	4.4E+16	7.7E+8
0.575	2.4E+16	4.2E+8
0.85	7.6E+15	1.3E+8
1.25	9.6E+15	1.7E+8
1.75	3.4E+15	5.9E+7
2.25	5.2E+14	9.2E+6
2.75	7.3E+12	1.3E+5
3.5	1.3E+13	2.3E+5
5.0	2.9E+11	5.1E+3

[a] These values should be reduced by a factor of seven when all structural, component and equipment surfaces in containment are considered.

Table J.F-7

Time Mesh Spacing Used in Source Calculations
(Minutes)

0	640	28800
20	800	36000
40	960	43200
60	1120	57600
80	1280	72000
100	1440	86400
120	2160	108000
180	2880	129600
240	3600	151200
300	4320	172800
360	5040	216000
420	5740	259200
480	14400	

Table J.F-8

Source Energy Group Structure

Lower Boundary (MeV)	Upper Boundary (MeV)	Average Energy (MeV)
0.00	0.02	0.015
0.02	0.03	0.025
0.03	0.045	0.0375
0.045	0.07	0.0575
0.07	0.10	0.085
0.10	0.15	0.125
0.15	0.30	0.225
0.30	0.45	0.375
0.45	0.70	0.575
0.70	1.0	0.85
1.0	1.5	1.25
1.5	2.0	1.75
2.0	2.5	2.25
2.5	3.0	2.75
3.0	4.0	3.5
4.0	6.0	5.0

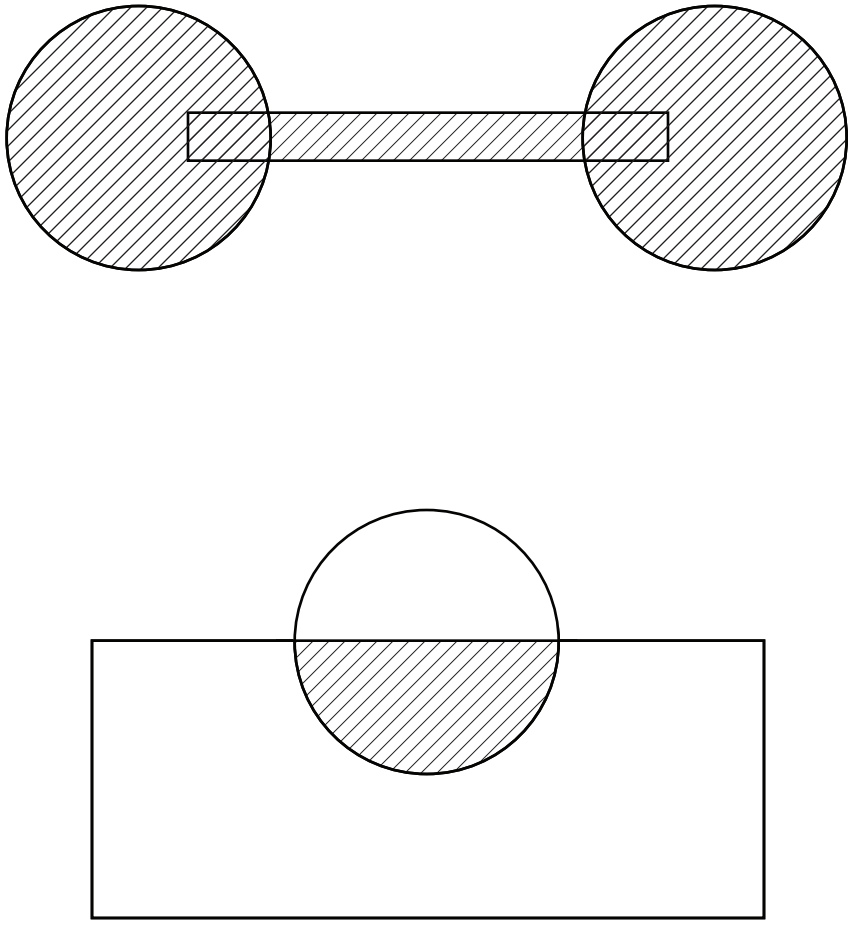

Columbia Generating Station
Final Safety Analysis Report

Geometry Examples

Draw. No. 970187.69	Rev.	Figure J.F-1

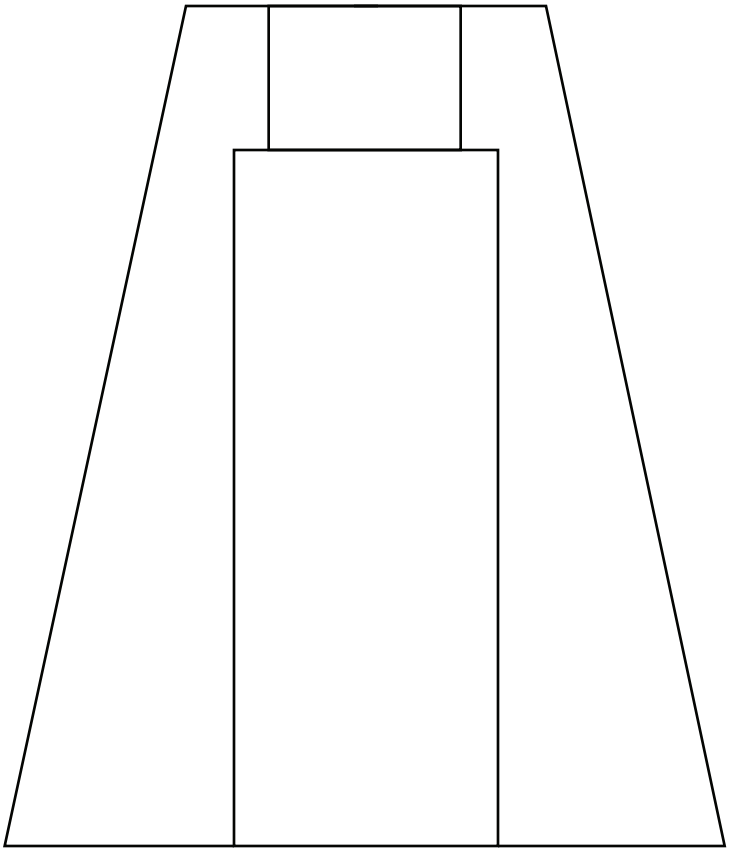

Columbia Generating Station
Final Safety Analysis Report

Basic QAD-CG Drywell Model

Draw. No. 970187.70	Rev.	Figure J.F-2

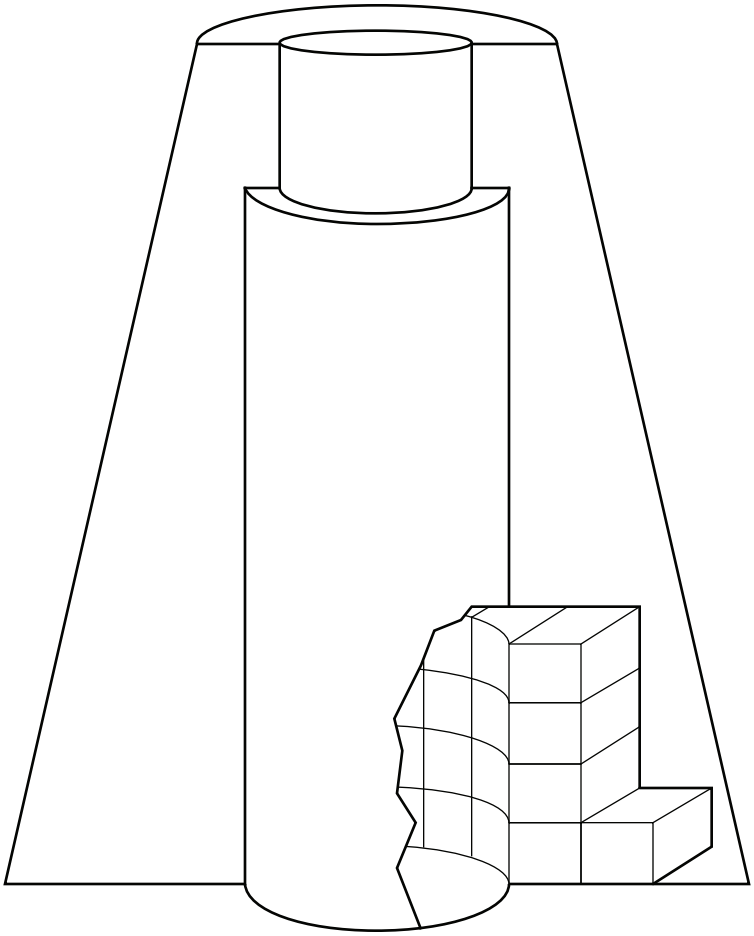

Columbia Generating Station
Final Safety Analysis Report

Isometric of Drywell Model

Draw. No. 970187.71	Rev.	Figure J.F-3

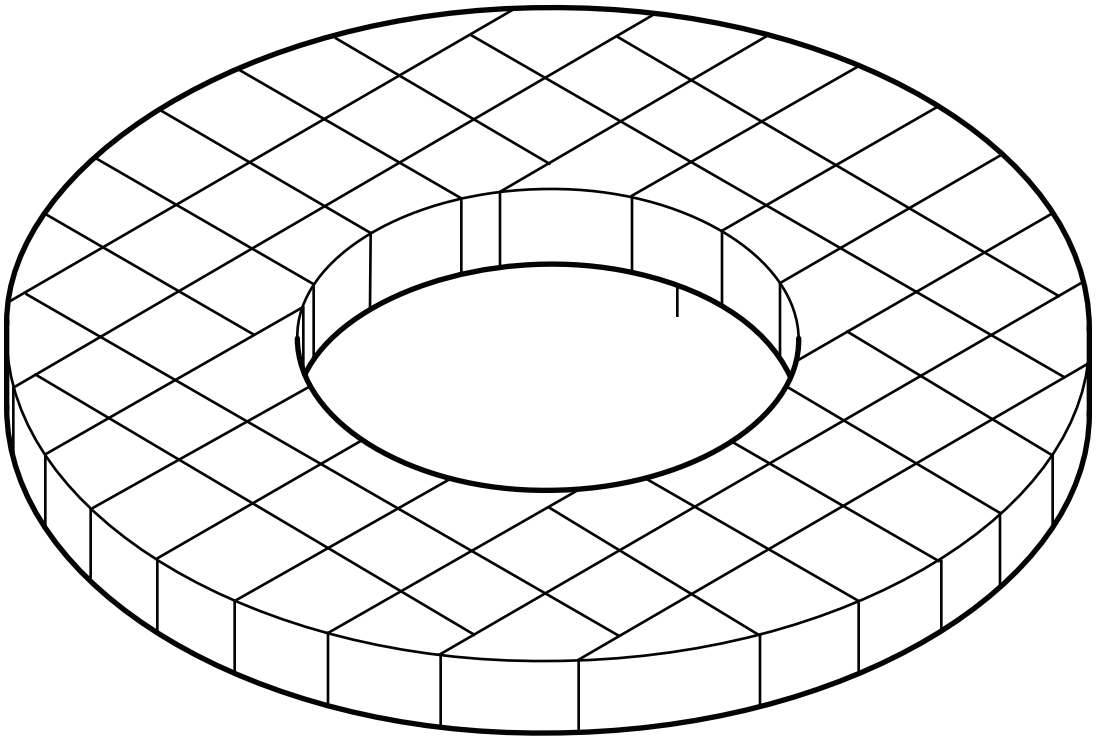

Columbia Generating Station Final Safety Analysis Report	Isometric of El. 513 ft 6 in. to 520 ft 6 in.		
	Draw. No. 970187.72	Rev.	Figure J.F-4

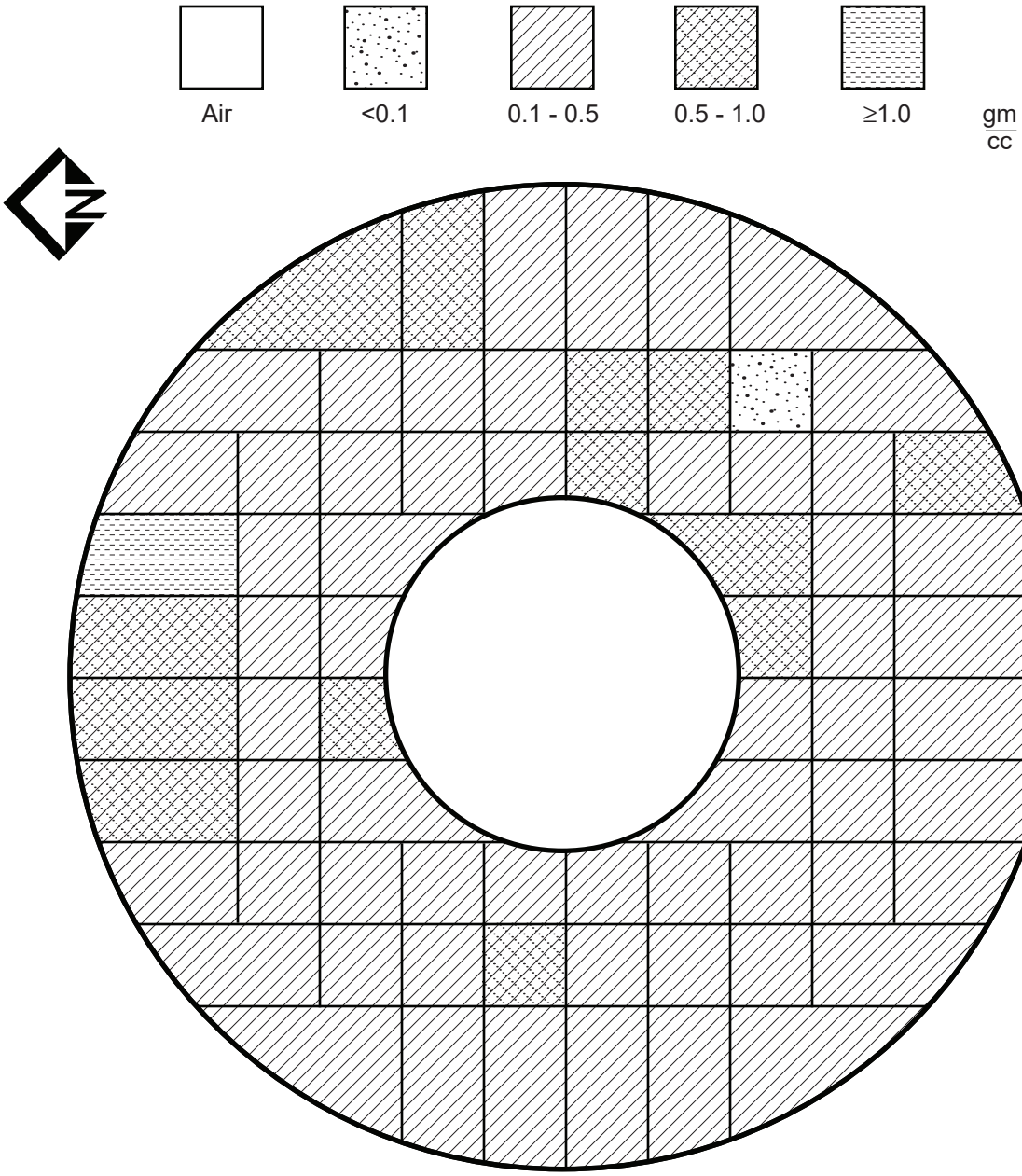

Illustrative Only - Code Used 41 Density Groups

Columbia Generating Station **Final Safety Analysis Report**	**Plan at El. 499 ft 6 in.**		
	Draw. No. **970187.73**	Rev.	Figure **J.F-5**

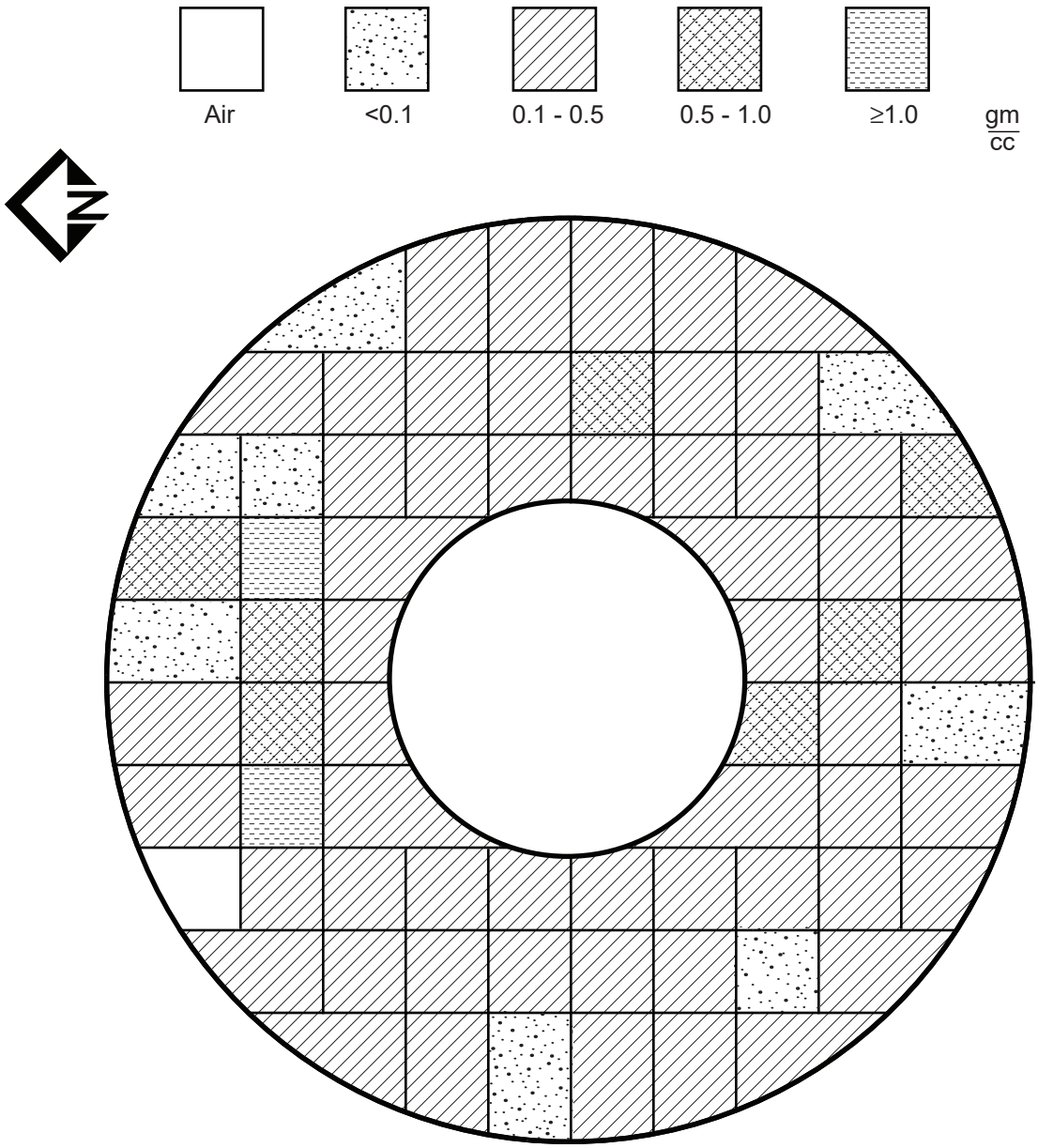

Illustrative Only - Code Used 41 Density Groups

Columbia Generating Station **Final Safety Analysis Report**	**Plan at El. 506 ft 6 in.**		
	Draw. No. **970187.74**	Rev.	Figure **J.F-6**

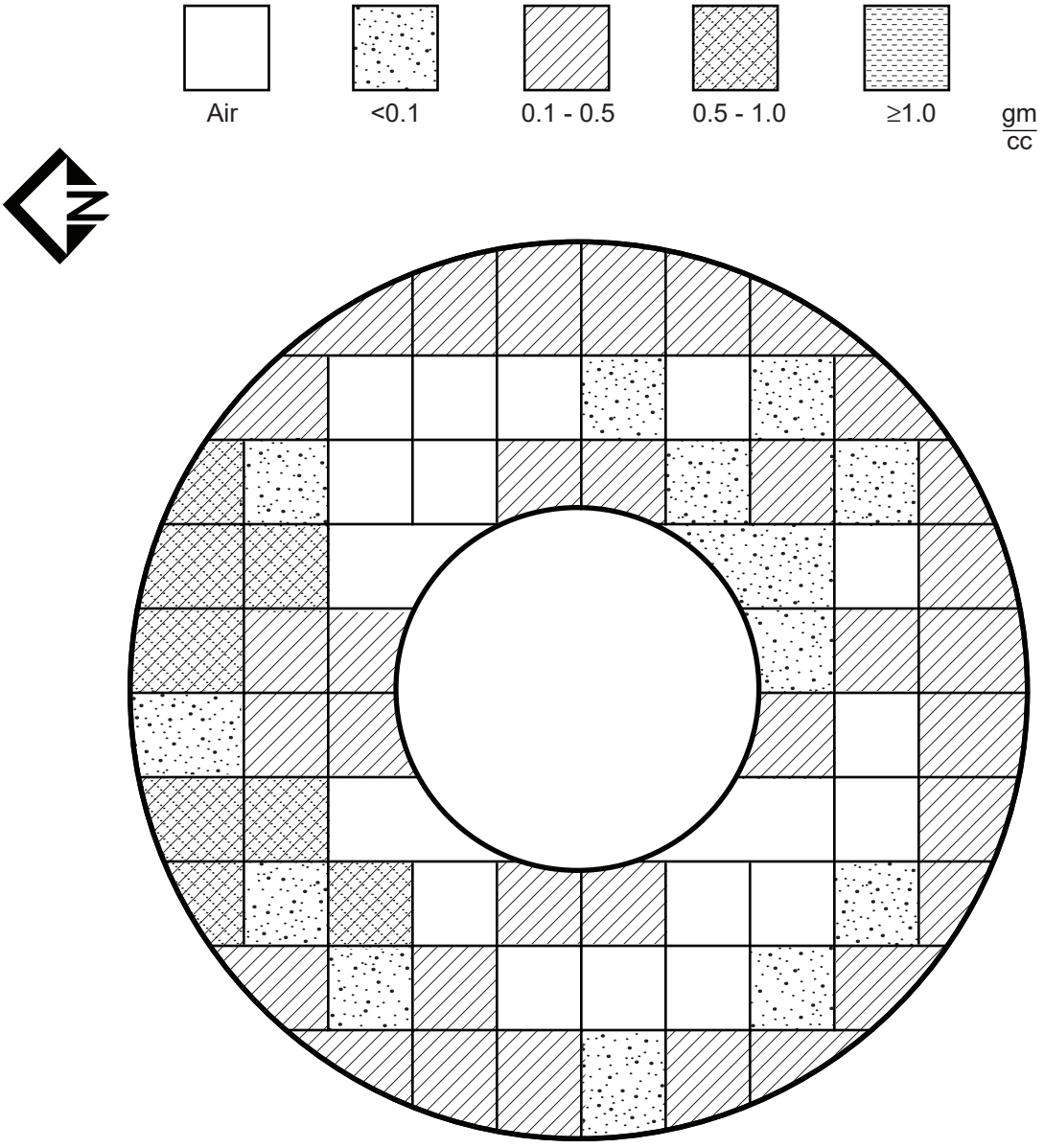

Illustrative Only - Code Used 41 Density Groups

Columbia Generating Station **Final Safety Analysis Report**	**Plan at El. 513 ft 6 in.**		
	Draw. No. **970187.75**	Rev.	Figure **J.F-7**

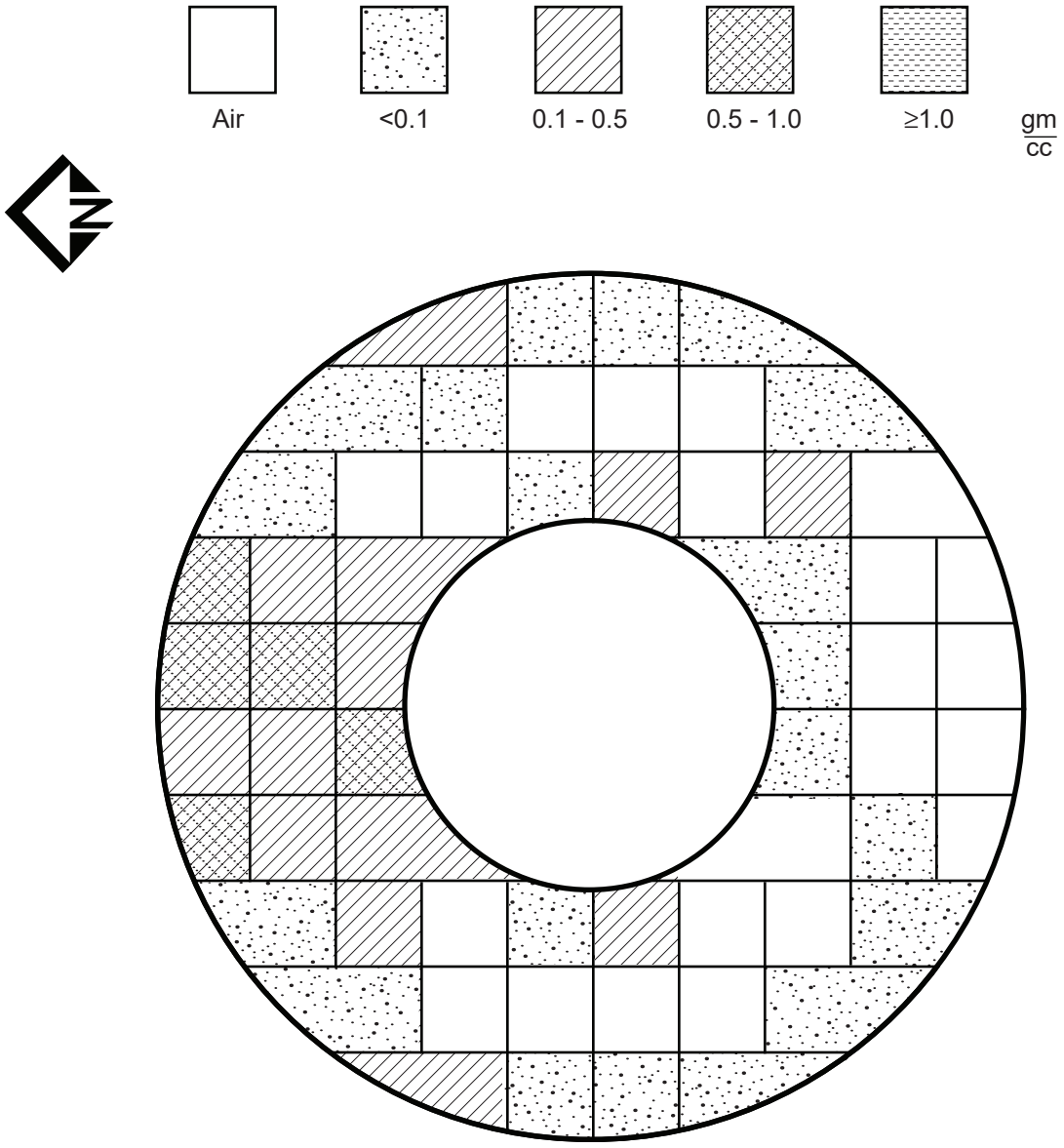

Illustrative Only - Code Used 41 Density Groups

Columbia Generating Station **Final Safety Analysis Report**	**Plan at El. 520 ft 6 in.**		
	Draw. No. **970187.76**	Rev.	Figure **J.F-8**

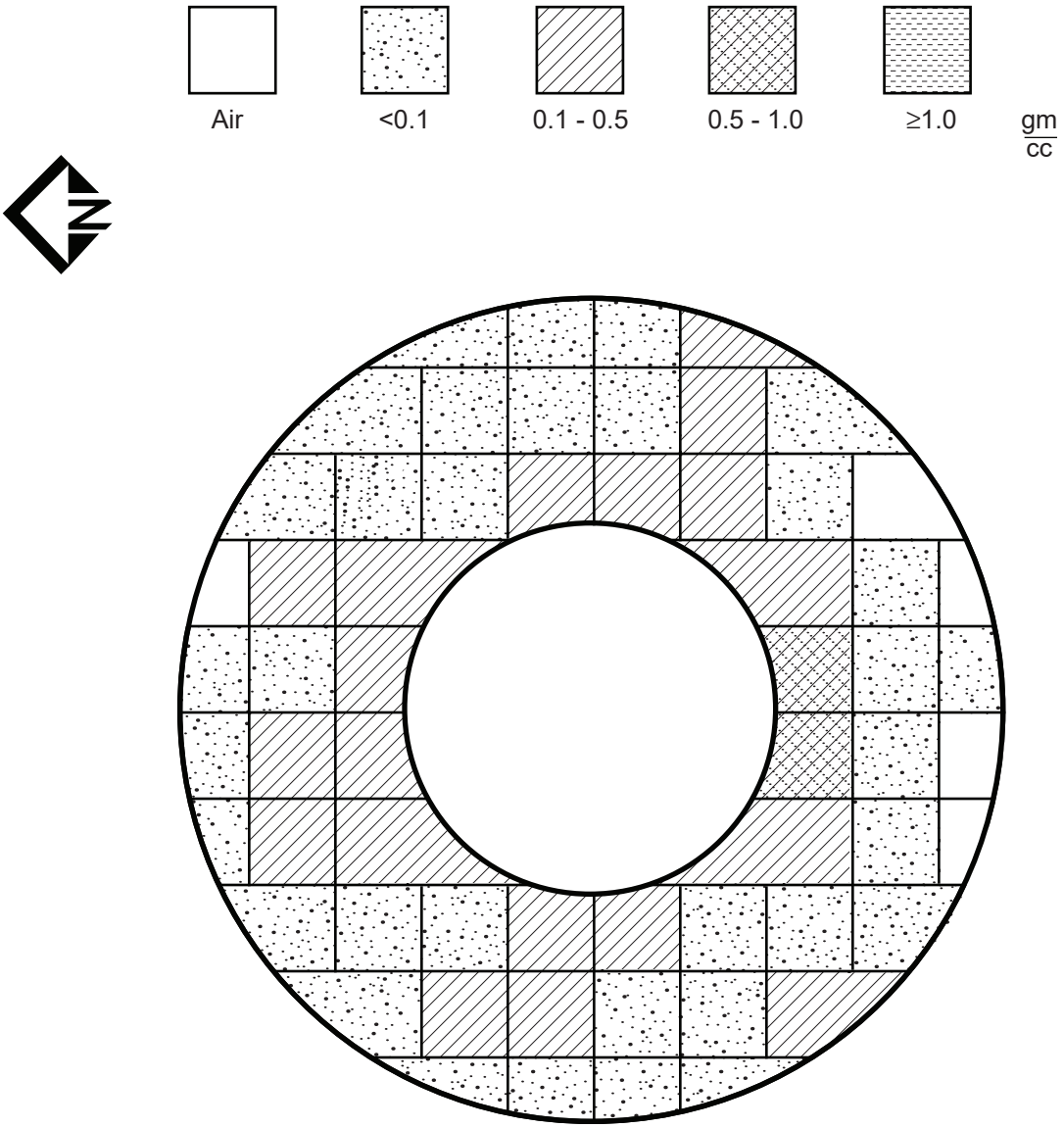

Illustrative Only - Code Used 41 Density Groups

Columbia Generating Station **Final Safety Analysis Report**	**Plan at El. 527 ft 6 in.**		
	Draw. No. **970187.77**	Rev.	Figure **J.F-9**

Attachment J.G

BETA DOSE CONTRIBUTION IN PRIMARY CONTAINMENT

The source volume used for the beta dose analysis in primary containment is a sphere surrounded by a shell of sufficient thickness to stop all outside beta particles from entering the source volume. This spherical source volume is conservative for any generalized source volume shape (the dose at the center of the sphere is higher than the dose at any point of any generalized source of equal total volume).

The assumptions used in the analysis are as follows:

a. Atmosphere inside the equipment casing is identical to the atmosphere in primary containment. This is conservative because there will actually be some delay in transport of the gaseous fission products into the equipment;

b. The initial beta source term used was 100% of core noble gases and 50% of core halogens (References J.7-2 and J.7-34);

c. Daughter products of the airborne noble gases and halogens are included in the calculation of the airborne dose which is conservative and was required by the use of ORIGEN2 as a source code (Reference J.7-8);

d. Plateout of halogens inside primary containment was utilized as allowed per Reference J.7-34. The dose contribution of fission products plated out on equipment casings was neglected. The deletion of dose contributions from fission products plated out on equipment casings is acceptable, since equipment surface areas are small relative to the available containment surface area. In addition, the betas emitted from plated out fission products would be absorbed in the equipment casing and, hence, would not affect internal components;

e. No primary to secondary containment leakage is assumed since it maximizes the beta source concentration in primary containment;

f. Activity is assumed to be uniformly distributed throughout the containment free volume which is reasonable, considering the mixing effects of the loss-of-coolant accident (LOCA) blowdown and the operation of the drywell fan coolers; and

g. A spherical volume representing the equipment casing will be used.

The beta dose to equipment is dependent on the internal volume size of the piece of equipment. The beta dose is determined through the use of an energy dependent geometry factor and a

ratio of the internal equipment volume to an infinite cloud. The beta dose contribution is excluded from the worst case total integrated gamma doses of primary containment shown in Section J.6.1 and Tables J.F-1 and J.F-2. The beta dose contribution is also excluded from the value, pump, and fan tables for C1E/SRM equipment in a primary containment environment.

The discussion and development of beta dose rate variation due to beta energy distribution in a one-dimensional absorbing medium is also valid for primary containment analysis.

Thus, the dose as a function of volume radius is given by the dual relation:

$$D(r) = D\infty \frac{[1 - \exp(-\mu_E r)]}{[1 - \exp(-\mu_E r_E)]} \qquad 0 \le r \le r_E$$

This relation may be transformed to a function of volume by noting that $V = 4 \pi r^3/3$.

Since μ_E and r_E vary for each beta energy, this equation cannot be solved analytically from the case of a mixture of many beta energies, which is the case at hand. However, since $D\infty$ for each beta energy is known (from the calculation of the semi-infinite source), $D_{E(v)}$ for each beta energy at a given volume may be determined. All contributions to the total dose at a given volume are then added together.

The volumes evaluated in this analysis were 10^3, 10^4, 10^5, and 10^6 cm^3. Table J.G-1 summarizes the semi-infinite volume for each beta energy group. Table J.G-1 also indicates the beta dose reduction factor for each of the beta energy groups at the finite beta volumes of interest. A plot of the integrated post-LOCA doses for these finite beta volumes is shown in Figure J.G-1. These results reflect the reduction in beta air dose from the semi-infinite medium air dose to a finite volume air dose.

The integrated beta infinite airborne dose for the primary containment as a function of time post-LOCA is shown in Figure J.G-2.

The absorbed beta dose within a physical target is not always equal to the beta dose at a mathematical point in air at the surface of that piece of equipment. The beta ionization energy (dose) deposited on the surface of a solid object is distributed in a thin surface layer to a depth equal to the beta range in the material. The relative material penetration of the different beta energy groups is used to provide a total integrated LOCA dose as a function of material depth.

Finite volume beta dose reduction factors were determined for each of the 10 beta energy groups. These factors are used to provide total integrated LOCA dose as a function of material penetration to reduce volume exposure.

Thus, the integrated dose values (Figure J.G-1) can be used as the absorbed material dose with a standard order of magnitude for reduction for material beyond 0.030-in. thickness or a dose reduction versus thickness based on the range of beta penetration within the material can be calculated.

Table J.G-1

Dose Rate Reduction Factors for the
Post-Loss-of-Coolant Accident
Beta Energy Groups at Finite Volumes

Energy Group (MeV)	V_E (cm^3)	$\frac{D(V)}{D_\infty}$ for Volumes			
		10^3 cm^3	10^4 cm^3	10^5 cm^3	10^6 cm^3
0.02 - 0.10	120.0	1.0	1.0	1.0	1.0
0.10 - 0.20	4.08×10^5	0.486	0.763	0.960	1.0
0.20 - 0.40	8.58×10^6	0.260	0.478	0.755	0.955
0.40 - 0.70	1.36×10^8	0.127	0.254	0.468	0.744
0.70 - 1.0	1.04×10^9	0.0695	0.144	0.284	0.513
1.0 - 1.3	3.46×10^9	0.0467	0.0979	0.199	0.380
1.3 - 1.6	8.18×10^9	0.0348	0.0735	0.152	0.299
1.6 - 2.0	1.59×10^{10}	0.0276	0.0585	0.122	0.244
2.0 - 2.5	3.20×10^{10}	0.0215	0.0457	0.0960	0.195
2.5 - 3.0	6.47×10^{10}	0.0167	0.0356	0.0752	0.155

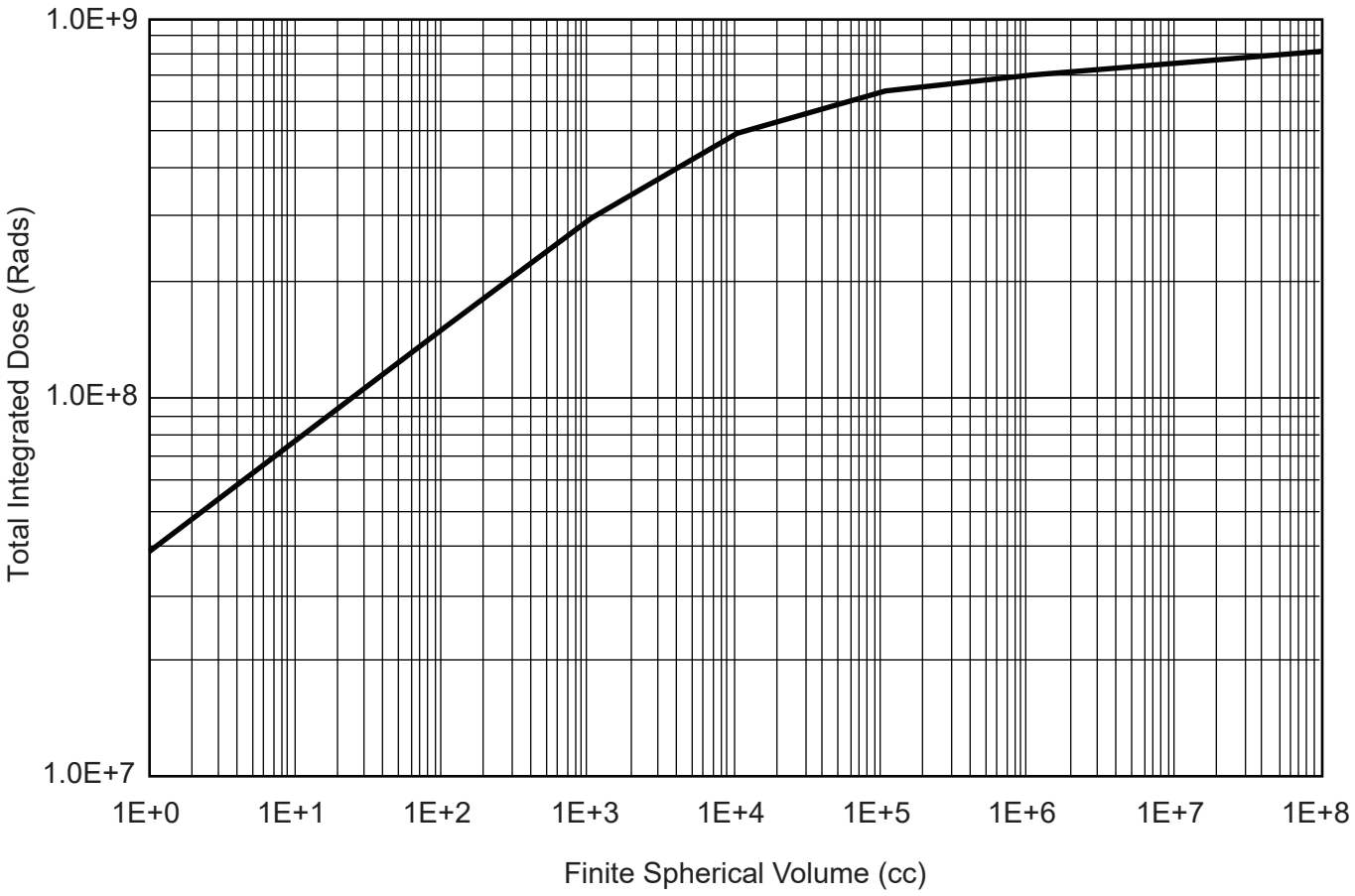

Columbia Generating Station Final Safety Analysis Report	Total Integrated Beta Cloud Airborne Dose in Primary Containment as a Function of Size		
	Draw. No. 960222.58	Rev.	Figure J.G-1

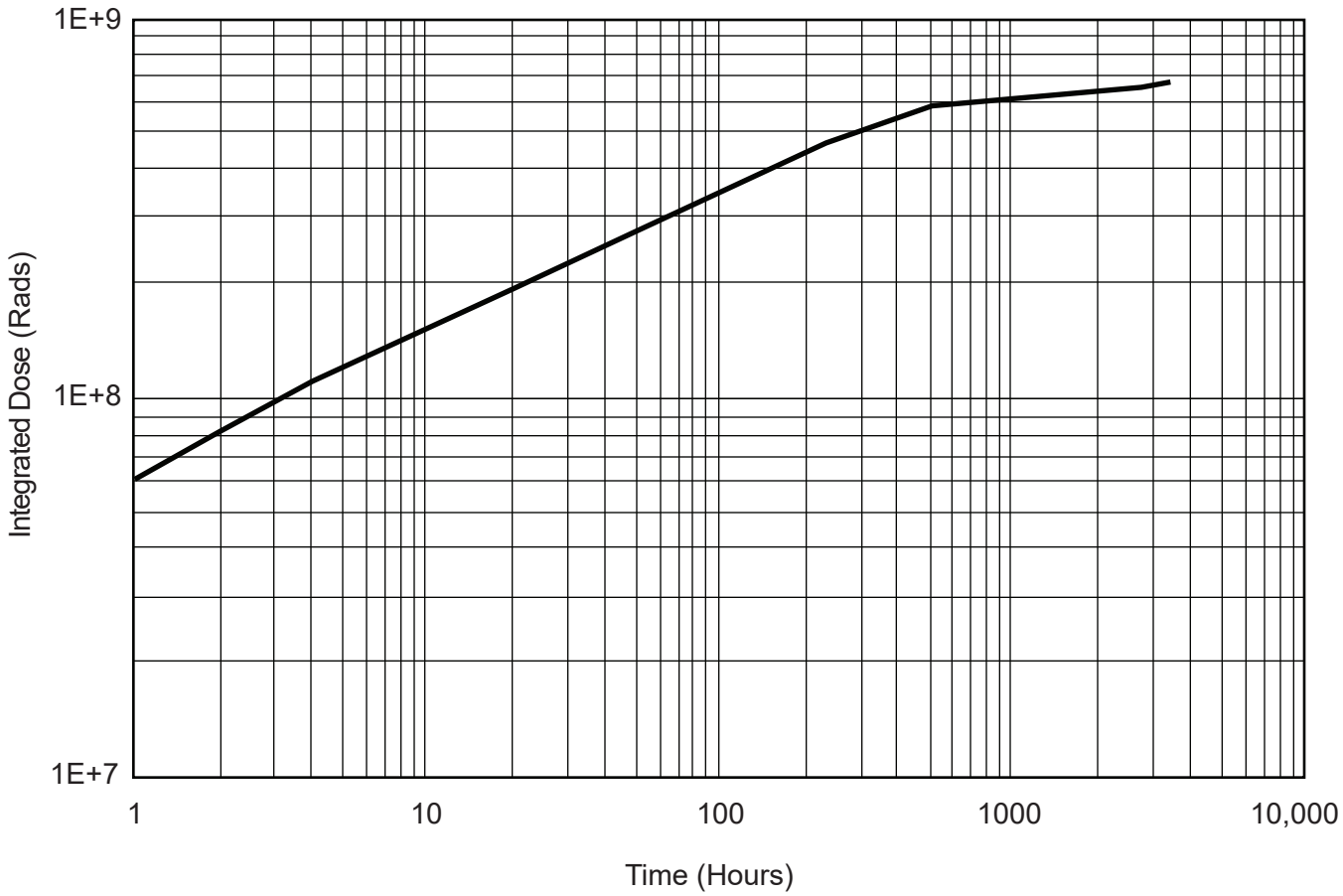

Columbia Generating Station Final Safety Analysis Report	Integrated Beta Infinite Airborne Dose for Primary Containment		
	Draw. No. 960222.60	Rev.	Figure J.G-2

Attachment J.H

VITAL AREAS AND ACCESS ROUTES ANALYZED FOR POST-LOSS-OF-COOLANT-ACCIDENT OPERATIONS

This attachment represents the methodology and assumptions used to determine the integrated dose to equipment and personnel for vital areas and access routes outside the reactor building during post-loss-of-coolant accident (LOCA) operations. The source term is the reactor building elevated vent with gaseous effluents being filtered by the standby gas treatment system (SGTS) prior to discharge to the atmosphere.

J.H.1 SOURCE OF RADIOACTIVITY TO THE REACTOR BUILDING ELEVATED VENT

Two contributions were considered as the source of the radioactivity to the reactor building elevated vent:

a. Leakage from the drywell to the reactor building and discharged via the SGTS to the reactor building elevated vent was assumed at a rate of

0.5%/day = 2.1E-4/hr, and

b. Leakage from the assumed leaks on the main steam isolation valves (MSIVs) in the main steam tunnel was assumed at a rate of

0.17%/day = 7.1E-5/hr (Reference J.7-56)

Thus, the total leakage rate of activity from the primary system is assumed to be

0.67%/day = 2.8E-4/hr.

J.H.1.1 Reactor Building Air Discharge Rate

All radioactivity considered outside the reactor building is assumed to discharge via the reactor building elevated vent.

The removal rate of the reactor building ventilation can be determined as follows:

$$\text{Removal rate} = \frac{\text{SGTS discharge rate}}{\text{Reactor building volume}}$$

SGTS discharge flow = 2430 ft^3/minute

Reactor building volume = 3.5E+6 ft^3

Thus, the removal rate is as follows representing one volume change per day:

$$\text{Removal rate} = \frac{(2430\ ft^3/min)(60\ min/hr)}{3.5E+6\ ft^3}$$

Removal rate = 4.2E-2/hr

This removal rate was used in the determination of radiation levels outside the reactor building.

J.H.2 POSTACCIDENT DESIGN DOSE (PADD)

A small computer program (PADD) was written to complete the calculations for the 18 nuclides over various time periods and sum the results. The equation used to determine the dose is as follows:

$$\text{Dose(rad)} = DF(j)\left(\frac{\chi}{Q_1} * TF * \frac{Q1_j + Q2_j}{3600}\right) \qquad \text{(J.H-1)}$$

where

$Dose_{ji}$ = Rads from jth nuclide for the ith time period.

DF_j = Gamma dose factors for semi-infinite cloud $\frac{Rad * m^3}{Ci * hr}$ for jth nuclide.

χ/Q_1 = sec/m^3 for gaseous releases from the reactor building vent to the atmosphere for the ith time period.

RF = Removal fraction of activity via the standby gas treatment.

TF = 0.01 for particulates and iodines (99% efficiency or RF).

TF = 1.0 for noble gases (FSAR Section 6.5).

$Q1_j$ = Integrated activity of jth nuclide over ith time period that was released via leaks in the MSIVs (curies/hour).

$Q2_j$ = Integrated activity of jth nuclide over the ith time period that was released via leakage from the primary to secondary containment (curies/hour).

3600 = Conversion from hours to seconds.

J.H.2.1 Assumptions Used in χ/Q Calculation Methodology

The following equation from "Meteorology and Atomic Energy" (Reference J.7-31) was used to determine the χ/Q values shown in Table J.H-1.

$$\text{Dilution} = 2.22(M)\ (3.16 + 0.1\ \frac{S}{(Aex)^{1/2}})^2\ \frac{V_{mean}}{V_{ex}} \qquad \text{(J.H-2)}$$

= F_B (building wake factor)

M = 1 if intake and exhaust same elevation

M = 2 if intake and exhaust separated by one floor

M = 4 if intake is in building wake cavity

S = shortest intake exhaust arc length

Aex = exhaust area

V_{mean} = mean approach flow

V_{ex} = mean exhaust flow

The intake was assumed to be for category F weather conditions with a V_{mean} = 1 meter/sec.

Then $\chi/Q = \frac{1}{F_B\ R_R}$

F_B = building wake factor

R_R = release rate from reactor building vent (m^3/sec)

Concentration in reactor vent

$C_V = Q/R_R$

where

Q = curies/sec released

Concentration at intake $C_I = C_V/F_B$

C_I also $= Q(\chi/Q)$

Therefore:

$$C_i = \frac{C_V}{F_B} = Q(\chi / Q) = (\frac{Q}{F_B \quad R_R})$$

$$(\chi / Q) = \frac{1}{(F_B)(R_R)} = \text{total dilution factor } (D_F).$$

An F class stability was assumed for atmosphere conditions and 5% meteorology was then applied for time periods from 0 to 180 days. The dilution factors decrease by the following ratios for the time periods indicated.

Time (hr)	0-2	2-8	8-24	24-96	96-4320
Ratio	1.0	0.35	0.04	0.02	0.01

The dilution factors were multiplied by the 5% meteorology ratios to determine the actual χ/Q values used in these computations as presented in Table J.H-1.

J.H.2.2 Integrated Activity Equations Used in this Analysis

The time dependent activity of each nuclide being released from the MSIV was analyzed as follows:

$$\frac{dA1}{dt} = PA_o e (-\lambda + \frac{0.0067}{24}) t \qquad \text{(J.H-3)}$$

where

P = Fractional leak from MSIV per hour (7.1 E-5/hr)

A_o = Initial activity of jth nuclide in primary containment at t = 0 hr

Thus, the activity concentration over a time period of t_1 to t_2 is

$$Q_1 = \int_{t_1}^{t_2} PA_o \, e \left[-(\lambda + 2.8E-4)t \right]$$

or

$$Q_1 = \frac{PA_o}{(\lambda + 2.8E\text{-}4)} \left[e^{-(\lambda + 2.8E\text{-}4)\, t1} - e^{-(\lambda + 2.8E\text{-}4)\, t2} \right] \qquad \text{(J.H-4)}$$

The integrated activity concentration from the primary to secondary containment leakage, Q2, was calculated as follows:

$$\frac{dA_2}{dt} = KA_1 - L_2 C_2 - \lambda A_2 \qquad \text{(J.H-5)}$$

where

K = Fractional leak rate from primary containment

= $\frac{0.005}{24hr} = 2.1E-4\ hr^{-1}$

A_0 = Activity in primary containment

= $A_o \exp\left[-(\lambda + \frac{0.0067}{24}) t \right]$

A_1 = Initial activity (Ci) at t = 0

$\frac{0.0067}{24}$ = Leakage removal rate from primary containment per hour

= 2.8E-4 hr^{-1}

L2 = Discharge rate from reactor building vent via standby gas treatment
= 2430 ft^3/min (60 min/hr)

= 1.46E+5 ft^3/hr

C2 = Activity concentration in secondary containment

A2 = Curies in secondary containment

V2 = Volume in secondary containment

Rearranging

$$\frac{dA2}{dt} = kA_o \exp\left[-(\lambda + 2.8E\text{-}4)t\right] - \frac{L2}{V2} A2 - \lambda A2$$

or (J.H-5A)

$$dA2 = kA_o e^{-F_1 t} - \left(\frac{L2}{V2} + \lambda\right) A2$$

$$dA2 = \left[kA_o e^{-F_1 t} - F_2 A2\right] dt$$

where

$$F_2 = \lambda + \frac{L2}{V2}$$

$$F_1 = (\lambda + 2.8E\text{-}4)$$

$$A2' = kA_1 - F_2 A2$$

$$A2' + F_2 A_2 = r(t)$$

$$r(t) = kA_o e^{-F_1 t} \quad \text{(J.H-6)}$$

solving

$$A2 = e^{-F_2 t}\left[\left(\frac{kA_o}{F_2 - F_1}\right)\right] e^{(F_2-F_1)t} + C$$

at t=o, A2 = o (J.H-7)

$$c = -0.005 A_o$$

Thus,

$$A_2(t) = 0.005 A_o e^{-\lambda t} (1 - e^{-(.0042)t})$$

$$Q2 = \frac{L2\, A_2(t)}{V2} \quad \text{or} \quad \text{(J.H-8)}$$

$$Q2 = \frac{1.45E+5\ ft^3/hr}{3.5E+6\ ft^3}\left[0.005 A_o e^{-\lambda_j t} (1 - e^{-C2t})\right]$$

where C2 = 0.042 (J.H-9)

thus,

$$Q2 = 2.11E\text{-}4\ A_o e^{-\lambda_j t}\ (1 - e^{-C2t})$$

To determine the integrated concentration:

$$Q2(t) = 2.1E\text{-}4\ A_o \int_{t_1}^{t_2} \left[e^{-\lambda t} - e^{-(\lambda + C2)t}\right] dt \qquad \text{(J.H-10)}$$

Solving,

$$Q2 = 2.1E\text{-}4\ A_o \left[e^{-\lambda t_1} - e^{-\lambda t_2}\right] \frac{(e^{-C2t_1} - e^{-C_2 t_2})}{\lambda + C2} \qquad \text{(J.H-11)}$$

The values of Q1 and Q2 are substituted in for each nuclide and each time period. Then using equation (J.H-1), the dose commitment for each nuclide and each time period may be calculated. These results are presented in Section J.6.3.

Table J.H-1

Post-Loss-of-Coolant Accident χ/Q Values[a] Used for Calculations of Integrated Doses Outside the Reactor Building

Area	Time (hr)				
	0-2	2-8	8-24	24-96	96-4320
					(180 days)
Security center	2.lE-4[b]	7.35E-5	8.4E-6	4.2E-6	2.1E-6
Auxiliary security center	1.2E-4	4.2E-5	4.8E-6	2.4E-6	1.2E-6
Sample analysis area (end of cycle)	2.6E-4	9.1E-5	1.0E-5	5.0E-6	2.5E-6
Nitrogen supply to accumulators	2.6E-4	9.1E-5	1.0E-5	5.0E-6	2.5E-6
Standby service water pump valves	1.2E-4	4.2E-5	4.8E-6	2.4E-6	1.2E-6
Remote shutdown room	2.6E-4	9.1E-5	1.0E-5	5.0E-6	2.5E-6
Switchgear room 1	2.6E-4	9.1E-5	1.0E-5	5.0E-6	2.5E-6
Switchgear room 2	2.6E-4	9.1E-5	1.0E-5	5.0E-6	2.5E-6
Radwaste control room	2.6E-4	9.1E-5	1.0E-5	5.0E-6	2.5E-6
Battery racks Direct current battery charger Motor control center	2.6E-4	9.1E-5	1.0E-5	5.0E-6	2.5E-6
Three motor control centers/ Three switchgears Direct current battery charger and rack	2.6E-4	9.1E-5	1.0E-5	5.0E-6	2.5E-6
Diesel oil tanks	2.6E-4	9.1E-5	1.0E-5	5.0E-6	2.5E-6
Solid radwaste control panel	2.6E-4	9.1E-5	1.0E-5	5.0E-6	2.5E-6
Sample of elevated release duct	8.0E-4	2.8E-4	3.2E-5	1.6E-5	8.0E-6

The standby service water pump valves are approximately 700 ft from the release point. This distance is too great to calculate a dilution based solely on a building wake factor. However, the conservative assumption will be made that the dilution at the valves is the same as at the auxiliary guard house which is only 420 ft.

[a] These values are based on an MSIV leak rate of 0.22%/day not the 0.17%/day previously listed. The results are acceptable and conservative for a leak rate of 0.17%/day.

[b] Read as 2.1×10^{-4} etc.