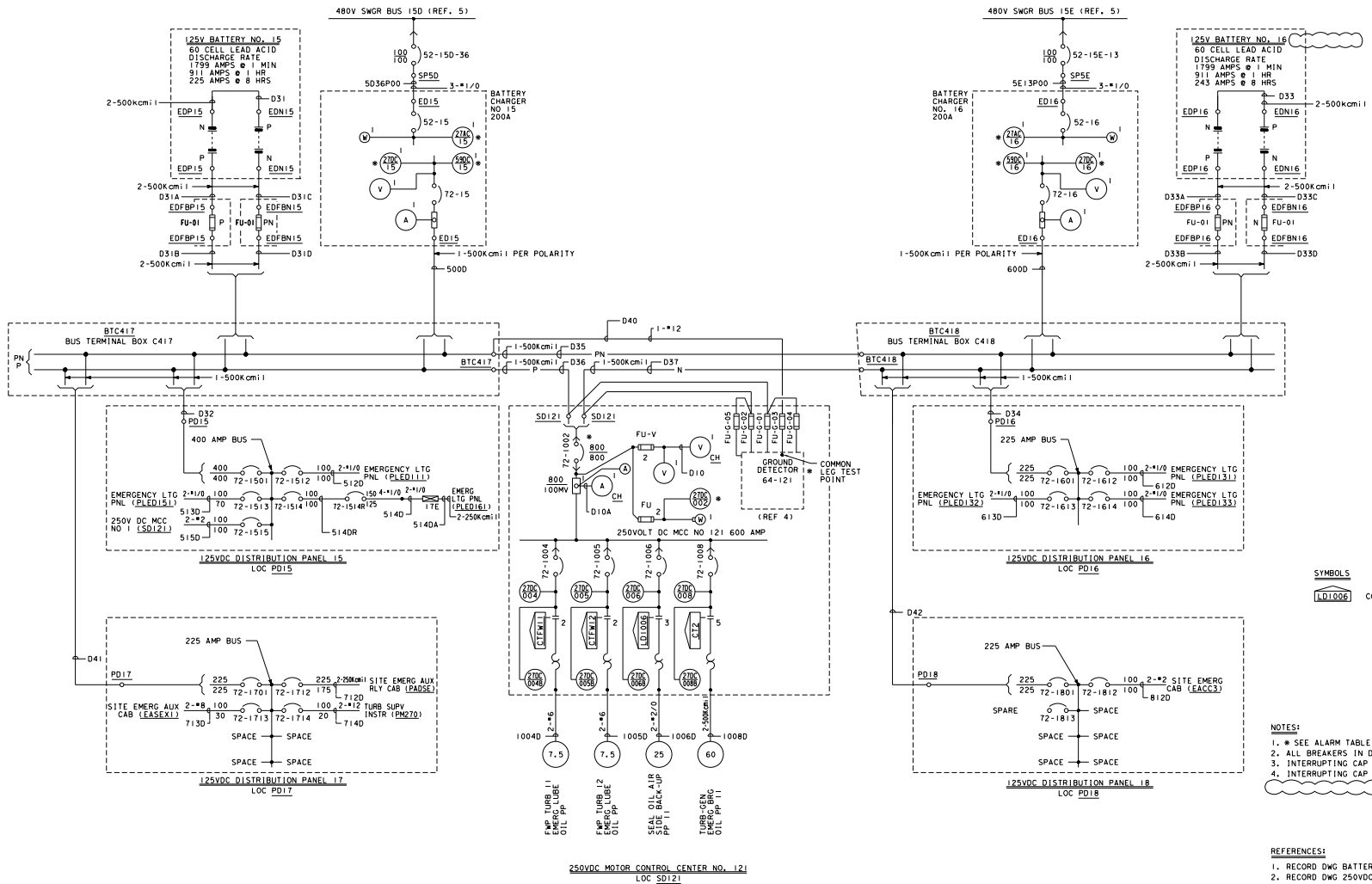

ALARM TABLE

DEVICE	CKT NO	REF DWG
27DC15 27AC15 59DC15	AV2921D	502115
27DC16 27AC16 59DC16	AV2922D	502115
27DC002 72-1002	AY2947DF	501140
64-121	AI2961DF	501140

SYMBOLS

LD1006 — CONTROL STATION WITH AUTO STARTING DEVICE WITH LOC NO

NOTES:

1. * SEE ALARM TABLE
2. ALL BREAKERS IN DISTR PANELS TO BE EQUIPPED WITH 3/16" IN BRASS EYEBOLTS.
3. INTERRUPTING CAP OF CIRCUIT BREAKERS SHALL NOT BE LESS THAN 20,000A AT 250VDC.
4. INTERRUPTING CAP OF ALL POWER FUSES SHALL NOT BE LESS THAN 50,000A AT 250VDC.

REFERENCES:

	DWG NO.
1. RECORD DWG BATTERY	663343
2. RECORD DWG 250VDC MOTOR CONTROL CENTER	663345
3. RECORD DWG BATTERY CHARGER	663344-42
4. SCHEM DIAG FOR GROUND DETECTOR 125/250V DC BUSES	333354
5. SLMR DIAG 480V SYSTEM BUS SECTIONS 15D & 15E	437544
6. SLMR DIAG 125V DC SYSTEM	437546
7. SCHEM DIAG TURBINE LUBE OIL PUMPS	437564
8. SCHEM DIAG SEAL OIL, STATOR COOLING & HYDROGEN CONTROL SYS	437571
9. SCHEM DIAG SEAL OIL, STATOR COOLING & HYDROGEN CONTROL SYS	437573
10. SCHEM DIAG MAIN ANNUNCIATOR	501140,502115
11.	
12. SCHEM DIAG FEEDWATER TURBINE AUX MOTORS	437672
13. BACK-UP OVERCURRENT BREAKER	REC 6000378
14. FED FROM LIST	064882
15. FUSE LIST	066144

KEY DWG. SECTION 1C

UNIT 1

DATE	
03-05-2019	
D.D.	IAZ1
R.E.	RXG2
I.V.	N/A
P.E.	N/A

REVISION DESCRIPTION: Revised Per DDT-4#1754

ELECTRICAL
SINGLE LINE METER AND RELAY DIAGRAM
125V AND 250V DC SYSTEM

DIABLO CANYON POWER PLANT
PACIFIC GAS AND ELECTRIC COMPANY
SAN FRANCISCO, CALIFORNIA

DWG SCALE:
BILL OF MATL:
SUPSDS:
SUPSD BY:

DRAWING	SHEET	PAGE	REV
455065	1	0	12

RASTER=455065-1-0.dgn
DGN=455065-1-0.dgn
CAD User=IAZ1 Date=03-05-2019