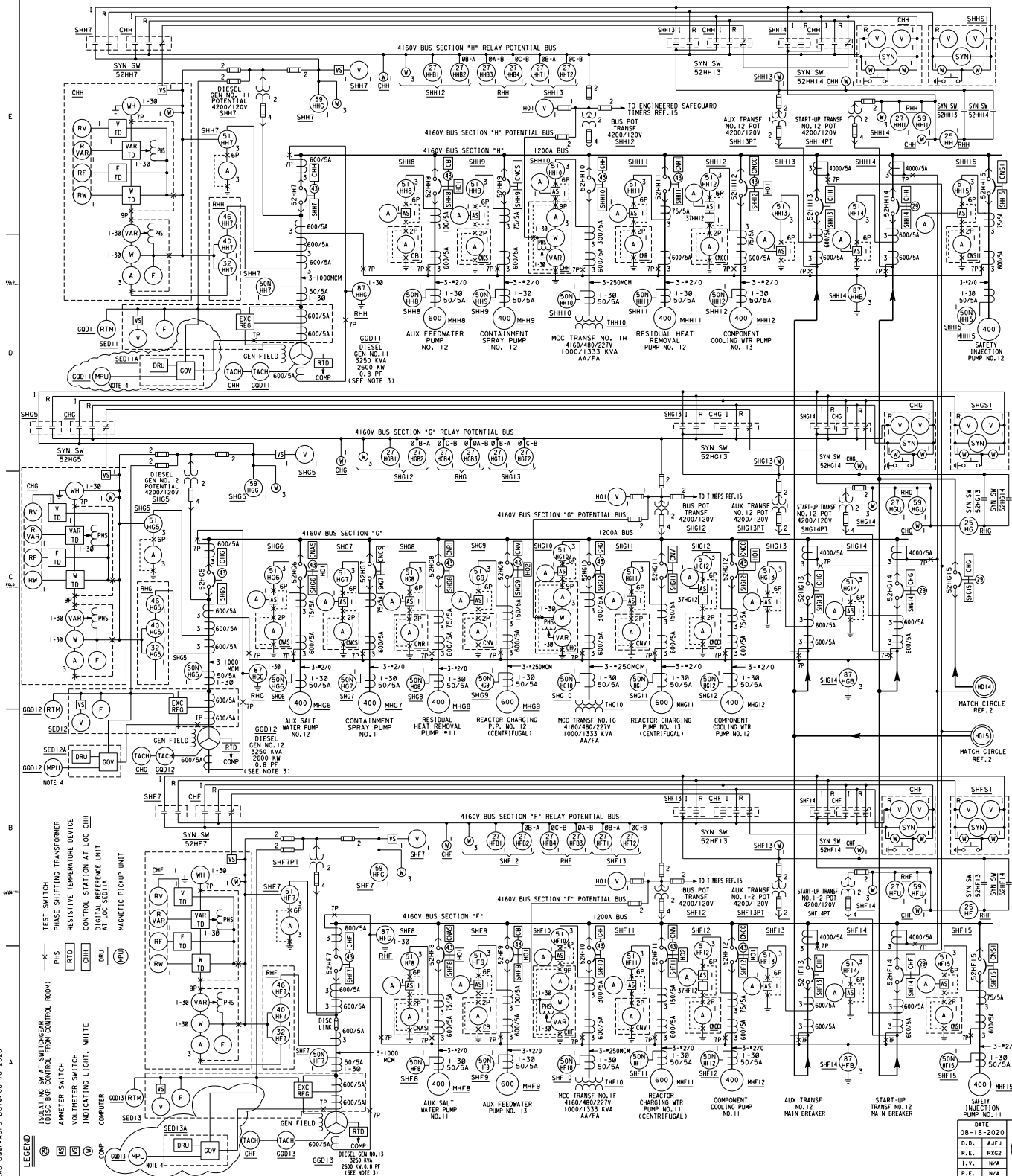

TABLE OF DEVICES

DEVICE NUMBERS	DESCRIPTION	RATING	MFR	TYPE	CATALOG OR REF DWG	REMARKS
A	AMMETER, CELL G11	0-50A	W.E.	GA-332	644363TA12	AT CONTROL BOARD
A	AMMETER, CELL G10	0-50A	G.E.CO	AB-40	50-103131LSNT2	AT SWITCHGEAR
A	AMMETER, CELL F8,12,15;G6,7,8,12;H9,11,12,15	0-75A	G.E.CO	AB-40	50-103131LSPB2	AT SWITCHGEAR
A	AMMETER, CELL F9,H8	0-100A	G.E.CO	AB-40	50-103131LSPK	AT SWITCHGEAR
A	AMMETER, CELL F11,G9	0-150A	G.E.CO	AB-40	50-103131LSPZ2	AT SWITCHGEAR
A	AMMETER, CELL H10,F10,G10	0-300A	G.E.CO	AB-40	50-103131LSRX2	AT SWITCHGEAR
A	AMMETER, CELL H7,13,14;F7,13,14;G5,13,14	0-600A	G.E.CO	AB-40	50-103131LSSJ2	AT SWITCHGEAR
A	AMMETER, CELL F8,12,15;G6,7,8,12;H9,11,12,15	0-75A	W.E.	GA-332	644B637A32	AT CONTROL BOARD
A	AMMETER, CELL F9,H8	0-100A	W.E.	GA-332	644B637A15	AT CONTROL BOARD
A	AMMETER, CELL F11,G9	0-150A	W.E.	GA-332	644B637A16	AT CONTROL BOARD
A	AMMETER, CELL H10,F10,G10	0-300A	W.E.	VC-252		AT CONTROL BOARD
A	AMMETER, CELL H7,F7,G5	0-600A	W.E.	KA241	291B461A26	AT CONTROL BOARD
V	VOLTMETER SYNCH	0-150V	G.E.CO	AB-16	50-120021PZUL2	AT SWGR RM (EAST SIDE WALL) SCALE 0-5250V
V	VOLTMETER SYNCH	0-150V				AT LOC. CHF, CHG, CHH
F	FREQUENCY METER,DIESEL GEN	50-70HZ				
FTD	FREQUENCY TRANSDUCER, DIESEL GEN	55-65HZ	EST-ANG		6284B	
RF	RECORDER FREQ, DIESEL GEN		YOKOGAWA	DX1004N		
RV	RECORDER VOLT, DIESEL GEN		YOKOGAWA	DX1004N		
RVAR	RECORDER VARS, DIESEL GEN		YOKOGAWA	DX1004N		
RW	RECORDER WATTS, DIESEL GEN		YOKOGAWA	DX1004N		
SYN	SYNCHROSCOPE	60Hz	G.E.CO	AB-16	50-120452AAAA2	AT SWGR RM (EAST SIDE WALL)
SYN	SYNCHROSCOPE	60Hz	W.E.	K1241	186A235A01	AT CONTROL BOARD
V	VOLTMETER,DIESEL GENERATOR	150V	G.E.CO	AB-40		AT SWGR,SCALE 0-5250V
WTD	WATT TRANSDUCER,DIESEL GENERATOR	120V,30	NOLLER OR SC▲		000759 OR XL3IK5A2	2 ELEMENT 3Ø
VAR	VARMETER,DIESEL GENERATOR	0-3.0MVAR	W.E.	K241		2 ELEMENT 3Ø
VAR	VARMETER,LC TRANSF.IH,IF,IG	0-1.5MVAR	W.E.	K241		
VARTD	VAR TRANSDUCER,DIESEL GENERATOR	120V,5A	NOLLER OR SC▲		000759 OR XLWV3IK5A2	WATT/VAR COMBINATION,NOTE 1
VR	VOLT REGULATOR,DIESEL GENERATOR					
VTD	VOLT TRANSDUCER,DIESEL GENERATOR	120V	NOLLER OR SC▲		0001288 OR VT11CA2	1 ELEMENT 1Ø
W	WATTMETER,DIESEL GENERATOR	120V,5A				2 ELEMENT 3Ø
WH	WATTHOUR METER,DIESEL GENERATOR	120V,2.5A	WE	D2B-2F		2 ELEMENT 3Ø
W	WATTMETER,LC TRANSF.IH,IF,IG	120V,5A				2 ELEMENT 3Ø
25HF,HG,HH	SYNCH CHECK RELAY,4KV BUS F,G & H	120V,60Hz	G.E.CO	IJS	121J551A3A	20°-60°
59HFU,HGU,HHU	O/V RELAY,ST-UP FDR,4KV BUS F,G & H	60-140V	W.E.	SSVT	1321D79A01	
27HFB1,GB1,HB1	U/V RELAY,4KV BUS F,G & H, (TRANSFER)	30-600PU	ABB	47H	412N0275-V	P/U 90-120V D/OUT 30-600PU
27HFB2,GB2,HB2	U/V RELAY,4KV BUS F,G & H(ST.DIESEL)	55-140V	BASLER ELEC CO	BE1	BE1-GPS100-E4N1H0	SEE NOTE 2
59HFG,GG,HG	O/V RELAY, DIESEL GEN	60-140V	ABB	SSV-T	1338D83A01	INSTANTANEOUS(CLOSE ON NORM V)
32HF7,G5,H7	DIRECTIONAL POWER RELAY,DIESEL GEN	120V,5A	W.E.	CRN-1	290B038A09	
40HF7,G5,H7	LOSS OF FIELD RELAY,DIESEL GEN	120V,5A	W.E.	KLF	290B481A09	
46HF7,G5,H7	UNIT NEGATIVE SEQUENCE RELAY,DIESEL GEN	3-5A	W.E.	COQ	1956207	3Ø ALARM ONLY
27HF12,HG12,HH12	U/V TRIP RELAY 4KV BUS F,G & H	60-140V	W.E.	SSVT	1321D79A15	
27HF11,HG11,HH11	U/V TRIP RELAY 4KV BUS F,G & H	55-140V	BASLER ELEC CO	BE1	BE1-27-AE3-C2J-B0B1F	SEE NOTE 2
50NHF7,G5,H7	GND CURRENT SENSOR,DIESEL GEN	0.1ΠΤΑ-0.2A	STRUTHERS/DUNN		112XAX11G10	ALARM ONLY
50NHF8,G6	GND CURRENT AUX,SALTWATER PUMP	0.1ΠΤΑ-0.2A	STRUTHERS/DUNN		112XAX11G10	ALARM ONLY
50NHF9,H8	GND CURRENT AUX,FEEDWATER PUMP	0.1ΠΤΑ-0.2A	STRUTHERS/DUNN		112XAX11G10	ALARM ONLY
50NHH11,G8	GND CURRENT RESIDUAL HEAT REMOVAL PUMP	0.1ΠΤΑ-0.2A	STRUTHERS/DUNN		112XAX11G10	ALARM ONLY
50NHG7,H9	GND CURRENT CONTAINMENT SPRAY PUMP	0.1ΠΤΑ-0.2A	STRUTHERS/DUNN		112XAX11G10	ALARM ONLY
50NHF10,G10,H10	GND CURRENT LC TRANSF.IF,IG,IH	0.1ΠΤΑ-0.2A	STRUTHERS/DUNN		112XAX11G10	ALARM ONLY
50NHF11,G11,G9	GND CURRENT REACTOR CHARGING PUMP	0.1ΠΤΑ-0.2A	STRUTHERS/DUNN		112XAX11G10	ALARM ONLY
50NHF12,G12,H12	GND CURRENT COMPONENT COOL WATER PUMP	0.1ΠΤΑ-0.2A	STRUTHERS/DUNN		112XAX11G10	ALARM ONLY
50NHF15,H15	GND CURRENT SAFETY INJECTION PUMP	0.1ΠΤΑ-0.2A	STRUTHERS/DUNN		112XAX11G10	ALARM ONLY
27HFU,HGU,HHU	U/V RELAY ST-UP FEEDER 4KV BUS F,G & H	55-140V	W.E.	CV-2	187550B	START DIESEL
27HFB3,GB3,HB3	U/V TRIP RELAY 4KV BUS F,G & H(2ND LEVEL)	60-140V	W.E.	SSV-T		
27HFB4,GB4,HB4	U/V TRIP RELAY 4KV BUS F,G & H(2ND LEVEL)	60-140V	W.E.	SSV-T		
37HF12,G12,H12	AC CURRENT/VOLTAGE ALARM MODULE	120V	ROCHESTER	1200L		AT SWGR,USED FOR RECIRC.MVX CONTROL
51HF7,G5,H7	OC RELAY DIESEL GENERATOR	.5-12A	BASLER ELECTRIC	BE1-51/27R	9 1372 00 129	WITH VOLTAGE RESTRAINT
51HF8,G6	OC RELAY AUX SALTWATER PUMP	.5-15.9A	BASLER ELECTRIC	BE1-50/51B	BE1-50/51B-107	1-99A INST.
51HF9,H8	OC RELAY AUX FEEDWATER PUMP	.5-15.9A	BASLER ELECTRIC	BE1-50/51B	BE1-50/51B-107	1-99A INST.
51HH11,G8	OC RELAY RESIDUAL HEAT REMOVAL PUMP	.5-15.9A	BASLER ELECTRIC			1-99A INST.
51HG7,H9	OC RELAY CONTAINMENT SPRAY PUMP	.5-15.9A	BASLER ELECTRIC			1-99A INST.
51HF10,G10,H10	OC RELAY LC TRANSFORMER IF, IG, IH	.5-15.9A	BASLER ELECTRIC	BE1-50/51B	BE1-50/51B-107	1-99A INST.
51HF11,G9	OC RELAY REACTOR CHARGING PUMP	.5-15.9A	BASLER ELECTRIC	BE1-50/51B	BE1-50/51B-107	1-99A INST.
51HF12,G12,H12	OC RELAY COMPOSOL WATER PUMP	.5-15.9A	BASLER ELECTRIC	BE1-50/51B	BE1-50/51B-107	1-99A INST.
51HF14,G14,H14	OC RELAY ST-UP TRANSF.MAIN BREAKER	.5-15.9A	BASLER ELECTRIC	BE1-50/51B	BE1-50/51B-107	I.T.UNIT NOT USED
51HF15,HH15	OC RELAY SAFETY INJECTION PUMP	.5-15.9A	BASLER ELECTRIC	BE1-50/51B	BE1-50/51B-107	1-99A INST.
51HF13,G13,H13	OC RELAY AUX TRANSF.MAIN BREAKER	.5-15.9A	BASLER ELECTRIC	BE1-50/51B	BE1-50/51B-107	I.T.UNIT NOT USED
51HG11	OC RELAY REACTOR CHARGING PUMP	.5-15.9A	BASLER ELECTRIC	BE1-50/51B	BE1-50/51B-107	1-99A INST.
52HG15	AIR CIRCUIT BKR 4160V SWGR	2000A	NTS/PDS INC.	SF6		IC 350MVA
52HF7 TO 15	CIRCUIT BKR 4160V SWGR	1200A	NTS/PDS INC.	SF6		IC 350MVA
52HG5 TO 14	CIRCUIT BKR 4160V SWGR	1200A	NTS/PDS INC.	SF6		IC 350MVA
52HH7 TO 15	CIRCUIT BKR 4160V SWGR	1200A	NTS/PDS INC.	SF6		IC 350MVA
RTM	RUNNING TIME METER,DIESEL GEN					
TACH	TACHOMETER,DIESEL GEN					
V	VOLTMETER BUS POTENTIAL	0-150	WE			
PHS	PHASE SHIFTING TRANSFORMER	120V	WE	MV-832	292B04BG09	3-PHASE,3-WIRE
87HF,G,GG,HG	DIFF.O.C.RELAY,DIESEL GEN.	5A,60HZ	WE	SA-1	290B225A10	0.14A MINIMUM PICK-UP
87HFB,GB,HB	DIFF.O.C.RELAY,4KV BUS F,G,H	.5-15.9A	BASLER ELECTRIC	BE1-50/51B	BE1-50/51B-107	I.T.UNIT NOT USED
43XXX/TS	CONTROL TRANSFER SW.					FOR DETAILS SEE ASSOCIATED REF. SCHEMATIC

▲ SC - SCIENTIFIC COLUMBUS (AN ESTERLINE CO.) SEE DWG 663100-245

REFERENCES

		DWG NO.
1.	DESCRIPTION OF ELECT SCHEM DIAGRAM SYMBOLS & EQUIP LOCATION NO'S	050003
2.	SINGLE LINE METER & RELAY DIAG 4160V BUS SECTION D & E	437532
3.	SINGLE LINE METER & RELAY DIAG, 12KV SYSTEM	437531
4.	SINGLE LINE DIAGRAM 480V SYSTEM SHEET 1	437542
5.	SINGLE LINE DIAGRAM 480V SYSTEM SHEET 2	437543
6.	SCHEMATIC DIAGRAM 4160V BUS POT & SYNCH, BUS SECTION F,G & H	437614
7.	SCHEMATIC DIAGRAM AUX SALT WATER PUMP	437594
8.	SCHEMATIC DIAGRAM CONTAINMENT SPRAY PUMP	437590
9.	SCHEMATIC DIAGRAM COMPONENT COOLING WATER PUMP	437593
10.	SCHEMATIC DIAGRAM REACTOR CHARGING PUMP	437595
11.	SCHEMATIC DIAGRAM RESIDUAL HEAT REMOVAL PUMP	437591
12.	SCHEMATIC DIAGRAM AUX FEEDWATER PUMP SHEET 1	437583
13.	SCHEMATIC DIAGRAM AUX FEEDWATER PUMP SHEET 2	437584
14.	SCHEMATIC DIAGRAM BUS DIFFERENTIAL PUMP SHEET 2	437617
15.	SCHEMATIC DIAGRAM AUTOMATIC TRANSFER	437625,6&7
16.	SCHEMATIC DIAGRAM SAFETY INJECTION PUMP	437589
17.	SCHEMATIC DIAGRAM AUX TRANSFORMER NO.12	437663
18.	SCHEMATIC DIAGRAM START-UP TRANSFORMER NO.12	437620
19.	SCHEMATIC DIAGRAM MCC TRANSFORMERS	437629
20.	SCHEMATIC DIAGRAM 4KV DIESEL GEN & ASSOC.CKT.BREAKERS SHEET 1	437665
21.	SCHEMATIC DIAGRAM 4KV DIESEL GEN & ASSOC.CKT.BREAKERS SHEET 2	437666
22.	SCHEMATIC DIAGRAM 4KV DIESEL GEN & ASSOC.CKT.BREAKERS SHEET 3	437676
23.	DELETED	
24.	FUSE LIST	066144
25.	VENDOR DWG DEC GOVERNOR CONTROL SCHEMATIC	663082-407,408

EQUIPMENT LOCATIONS

CB	CONTROL BOARD, CONDENSATE & FEEDWATER	CNCS	CONTROL BOARD, CONTAINMENT SPRAY
CHF	CONTROL BOARD, ENG SAFEGUARD 4KV BUS F	CNR	CONTROL BOARD, RESIDUAL HEAT
CNCC	CONTROL BOARD, COMPONENT COOLING	SHF13PT	SWGR 4KV BUS F CUBICLE 13 POT TRANSF
CNV	CONTROL BOARD, CHEM & VOL CONTROL SYSTEM	SHFSI	SWGR 4KV BUS F SYNCHRONIZING PANEL 1
CNAS	CONTROL BOARD, AUX SALTWATER	GDD11	DIESEL GENERATOR NO.11
CNSI	CONTROL BOARD, SAFETY INJ & ACC DISCHARGE	GDD11	DIESEL GENERATOR NO.11 GAUGE PANEL
RHF	RELAY BOARD, ENG SAFEGUARD 4KV BUS F	SED11	DIESEL GENERATOR NO.11 EXCITATION CUBICLE
SHF8	4160V SWGR BUS SECT F, CUBICLE NO. 8	SED11A	DIESEL GENERATOR NO.11 GOVERNOR CONTROL PANEL
HO1	HOT SHUTDOWN REMOTE CONTROL PNL 1 (FEEDWATER)	HO2	HOT SHUTDOWN REMOTE CONTROL PNL 2 (CHARGING)

NOTE:

1. XLWV3IK5A2 DOES NOT REQUIRE THE USE OF AN EXTERNAL PHASE SHIFTING TRANSFORMER FOR VAR METERING.
2. FOR ELECTRICAL DEVICES TECH DATA AND SETPOINTS SEE PIMS COMPONENT DATABASE.
3. NAMEPLATE VALUES DEPICTED ON THIS DRAWING, REFER TO CALC 015-DC (SAP# 9*37760) FOR RATED VALUES.
4. MPU MOUNTED ON ENGINE SKID

KEY DWG. SECTION IC

NUCLEAR SAFETY RELATED

DATE	
08-18-2020	
D.D.	AJFJ
R.E.	RXG2
I.V.	N/A
P.E.	N/A

REVISION DESCRIPTION: Revised Per DDN-2*1791 AND DDN-2*1793

UNIT 1

ELECTRICAL
SINGLE LINE DIAGRAM
SINGLE LINE METER & RELAY DIAGRAM
4160 VOLT SYSTEM

DIABLO CANYON POWER PLANT
PACIFIC GAS AND ELECTRIC COMPANY
SAN FRANCISCO, CALIFORNIA

DWG SCALE:
BILL OF MAT'L:
SUPSDS:
SUPSD BY:

DRAWING	SHEET	PAGE	REV
437533	1	0	47

U2- 441229, 441230