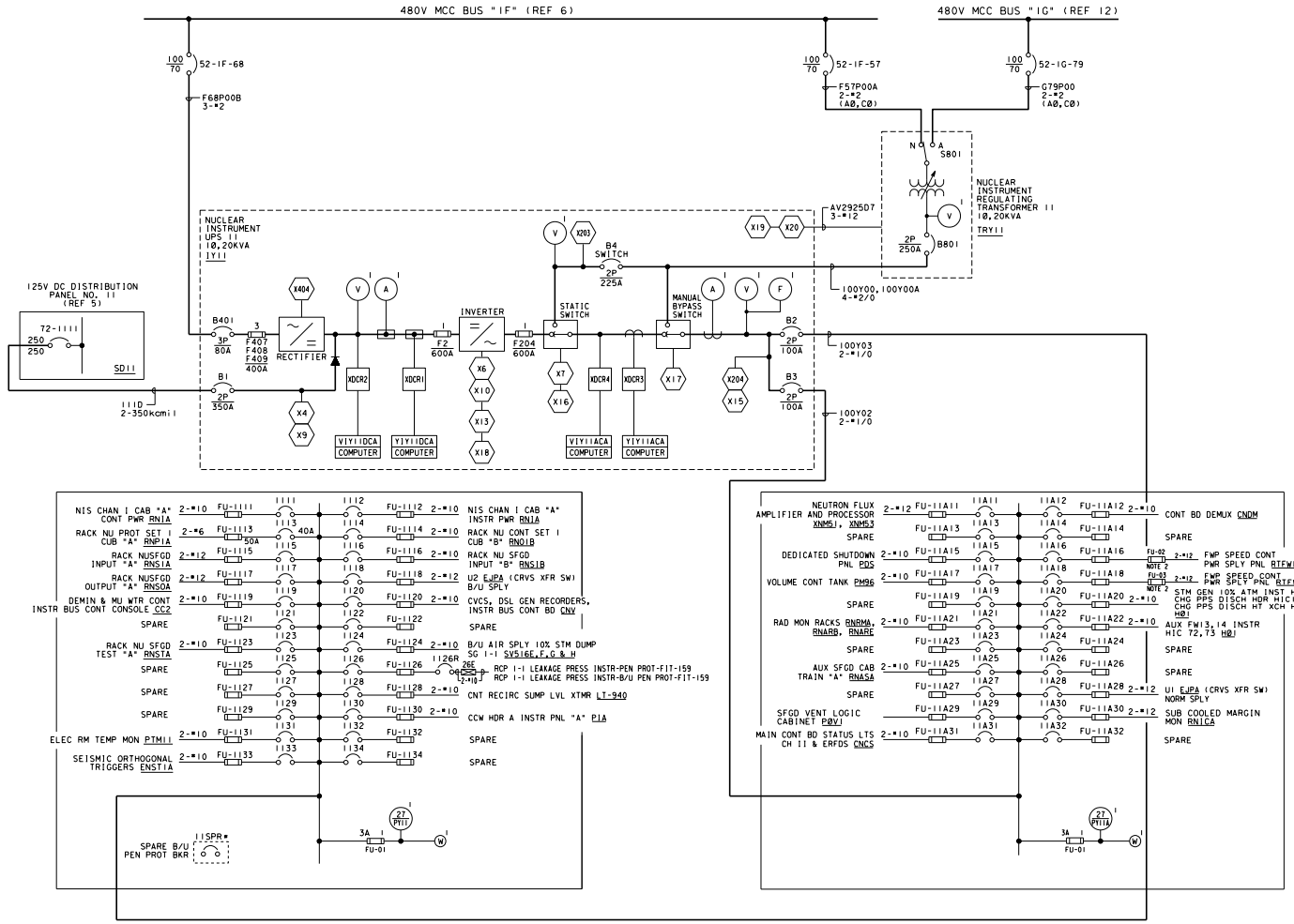

TABLE OF DEVICES

DEVICE	DESCRIPTION	CATALOG/TYPE	CONTACT	REMARKS
X12	UPS COMMON ALARM		LATCH	COMMON ALARMS FOR X7, X13, X18, X19, X20, X203 & X404
X7	OUT OF SYNC/COMMON ALARM		NON-LATCH	CONTACT CLOSES TO ENERGIZE X12
X13	UPS FAN FAILURE/COMMON ALARM		LATCH	CONTACT CLOSES TO ENERGIZE X12
X18	UPS OVER TEMP/COMMON ALARM		LATCH	CONTACT CLOSES TO ENERGIZE X12
X19	REG XFMR OVER TEMP/COM ALM		LATCH	CONTACT CLOSES TO ENERGIZE X12
X20	REG XFMR FAN FAILURE/COM ALM		LATCH	CONTACT CLOSES TO ENERGIZE X12
X203	LOSS OF BYPASS SOURCE/COM ALM		NON-LATCH	CONTACT CLOSES TO ENERGIZE X12
X404	AC INPUT/RECTIFIER FAIL/COM ALM		NON-LATCH	CONTACT CLOSES TO ENERGIZE X12
X4	DC INPUT UNDERVOLTAGE RELAY		NON-LATCH	CONTACT CLOSES TO ENERGIZE X9
X6	INVERTER OUTPUT UNDERVOLTAGE RELAY		NON-LATCH	CONTACT CLOSES TO ENERGIZE X10
X9	LOSS OF BATTERY SOURCE ALARM		LATCH	N.C. - CONTACT OPENS TO ALARM
X10	INVERTER FAILURE ALARM		LATCH	N.C. - CONTACT OPENS TO ALARM
X15	LOSS OF AC OUTPUT VOLTAGE ALARM		LATCH	N.C. - CONTACT IN SERIES WITH X204
X16	STATIC SW TRANSFERRED ALARM		LATCH	N.C. - CONTACT IN SERIES WITH X17
X17	MAN BYP SW IN BYPASS POS ALARM		NON-LATCH	N.O. - CONTACT IN SERIES WITH X16
X204	AC OUTPUT UNDERVOLTAGE RELAY		NON-LATCH	N.O. - CONTACT IN SERIES WITH X15
27PY11	PY11 UNDERVOLTAGE ALARM	P&B - TYPE CSJ MODEL 38-70010	NON-LATCH	N.C. - CONTACT CLOSES TO ALARM
27PY11A	PY11A UNDERVOLTAGE ALARM	P&B - TYPE CSJ MODEL 38-70010	NON-LATCH	N.C. - CONTACT CLOSES TO ALARM
XDCR1	DC INPUT CURRENT TRANSDUCER	RIS: 0 - 50mV DC		
XDCR2	DC INPUT VOLTAGE TRANSDUCER	RIS: 0 - 150VDC		
XDCR3	AC OUTPUT CURRENT TRANSDUCER	RIS: 0 - 5 AAC		
XDCR4	AC OUTPUT VOLTAGE TRANSDUCER	RIS: 0 - 130VAC		
72-11B1	DC INPUT BREAKER	G.E. TYPE TJK, 350A		
52-11B2	AC OUTPUT BREAKER	G.E. TYPE THED124100, 100A		
52-11B3	AC OUTPUT BREAKER	G.E. TYPE THED124100, 100A		
52-11B4	BYPASS SOURCE DISC SWITCH	G.E. TYPE TQD, 225A		
52-11B401	AC INPUT BREAKER	G.E. TYPE THED,(90A)		
52-11B801	REG XFMR OUTPUT BREAKER	C.H. TYPE HJD, 250A		
29-11S801	REG XFMR TRANSFER SWITCH	600VAC, 75A, 3PDT		BREAK-BEFORE-MAKE SWITCH
F2	INVERTER FUSE	250VAC, 600A		SEE DWG 066144
F204	STATIC SWITCH FUSE	250VAC, 600A		SEE DWG 066144
F407	RECTIFIER FUSE	250VAC, 400A		SEE DWG 066144
F408	RECTIFIER FUSE	250VAC, 400A		SEE DWG 066144
F409	RECTIFIER FUSE	250VAC, 400A		SEE DWG 066144

PANEL 11 INSTR AC DISTR

CHAN I
PY11

10, 2 WIRE, 120V

(ALL BKR'S ARE 20A, 1P EXCEPT AS SHOWN.)
ALL FUSES ARE 30A EXCEPT AS SHOWN.)
#NOTE: 11SPR IS A SPARE BKR FOR FUTURE PENETRATION REDUNDANCY, IT IS NOT CONNECTED ELECTRICALLY TO THE PANEL BUS.

PANEL 11A INSTR AC DISTR

CHAN I
PY11A

10, 2 WIRE, 120V
(ALL BKR'S ARE 20A, 1P EXCEPT AS SHOWN)
(ALL FUSES ARE 30A, EXCEPT AS SHOWN)

LEGEND:

- V — METER
- X8 — ALARM RELAY BOARD
- XDCR1 — TRANSDUCER
- FUSE
- Y1Y11DCA COMPUTER — PLANT COMPUTER INPUT NO.

NOTE:

1. DELETED.
2. THIS CIRCUIT BREAKER/FUSE ISOLATES CLASS 1E PANEL PY11A FROM A CLASS 11 LOAD. FOR FUSE SIZE & TYPE SEE REF.13.

REFERENCES

	DWG NO.
1. SINGLE LINE METER & RELAY DIAG INSTR AC SH #1	437547
2. SINGLE LINE METER & RELAY DIAG INSTR AC SH #2	437549
3. SINGLE LINE METER & RELAY DIAG INSTR AC SH #4	445291
4. SINGLE LINE METER & RELAY DIAG INSTR AC SH #5	445294
5. SINGLE LINE METER & RELAY DIAG 125V DC SYSTEM	437546
6. SINGLE LINE METER & RELAY DIAG 480V SYSTEM BUS SECT 1F	437916
7. SCHEMATIC DIAG-120V INSTR AC SYSTEM	4010036
8. SCI 20KVA UPS & REGULATING TRANSFORMER	REC 6013738
9. INSTR AC DISTR PNLS	REC 663341
10. ONE LINE VENDOR DIAGRAM FOR PANEL PY11	REC 6021760-105
11. LIST OF ELECTRICAL DEVICES	050024
12. SINGLE LINE METER & RELAY DIAG 480V SYSTEM BUS SECT 1G	437542
13. FUSE LIST	066144
14. ONE LINE VENDOR DIAGRAM FOR PANEL PY11A	REC 6021760-111

NUCLEAR SAFETY RELATED

KEY DWG. SECTION 1C

UNIT 1

DATE	
04-18-2019	
D.D.	IAZ1
R.E.	RXG2
I.V.	N/A
P.E.	N/A

REVISION DESCRIPTION: Revised Per DFT-744789

ELECTRICAL
SINGLE LINE METER AND RELAY DIAGRAM
120V INSTRUMENT AC SYSTEM

DIABLO CANYON POWER PLANT
PACIFIC GAS AND ELECTRIC COMPANY
SAN FRANCISCO, CALIFORNIA

DWG SCALE:
BILL OF MAT'L:
SUPSDS:
SUPSD BY:

DRAWING	SHEET	PAGE	REV
445290	1	0	19

U2-445390

RASTER=445290-1-0.dgn
DGN=445290-1-0.dgn
CAD User=IAZ1 Date=04-18-2019