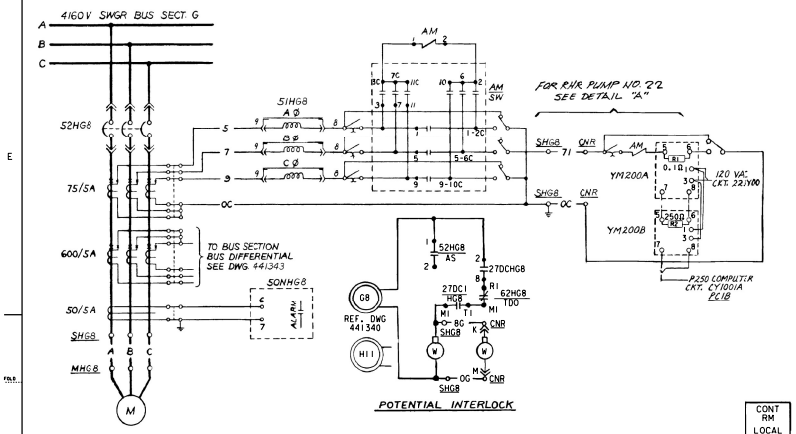

POTENTIAL INTERLOCK

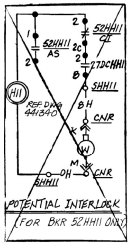

POTENTIAL INTERLOCK (FOR BKR 52HH11 ONLY)

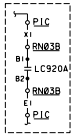

CKT 920RC03

DETAIL A

CONTACTS	POSITIONS A	INT	B	INT	C
1	1	×	×	×	×
2	2	×			
3	3	×	×		
4	5	×	×		×
5	6		×	×	×
7	7		×	×	
9	9	×	×	×	×
10	10			×	×
11	11			×	×

AMMETER SWITCH AM SW

USED AT LOCATION SHGB SHH11

CONTACTS	TRIP	POSITIONS AFTER TRIP	CLOSE	CLOSE	REMARKS
1				×	THIS DWG
2	×				THIS DWG
3	×			×	SPARE
4				×	SPARE
5		×	×		SPARE
5C					
7			×	×	THIS DWG
7C					

CONTROL SWITCH 52HGB CS 52HH11 CS

USED AT LOCATION SHGB SHH11
SPRING RETURN TO NEUTRAL

CONTACT	POSITION COTOUT	NORMAL	TEST	REMARK
A		X	X	THIS DWG
B			X	THIS DWG

SPRING RETURN TEST TO NORMAL MAINTAINED AT CUTOUT POSITION

RWST LOW LEVEL TRIP TEST SW USED AT LOCATION PIA, PIB, PIC

CONTACTS		POSITIONS STOP	NEUT	START	REMARKS
	A	×			THIS DWG
	B			×	THIS DWG
	C		×	×	THIS DWG
	D			×	SPARE
	E		×	×	THIS DWG
	F			×	SPARE

CONTROL SWITCH 52HGB CS 52HH11 CS

USED AT LOCATION CNR
SPRING RETURN TO NEUTRAL

TABLE OF DEVICES

DEVICE Nº	FUNCTION	RATING	MFR	TYPE	CAT/DWG Nº	REMARKS
YM200A YM201A	SIGNAL CONDITIONER	5W	ACTION INST.		102036	
YM200B YM201B	SIGNAL ISOLATOR	5W	ACTION INST.		102038	
2HGB, 2HH11	SAFETY INJECTION SIGNAL TIMING REL	120V AC	AGASTAT	ETR	ETR14123B	TIME DELAY, 55-15 SEC
27DCHGB, HH11	DC CONTROL BUS UNDERVOLTAGE REL.	125V DC	AGASTAT	EGPD		
27DCHGB, HH11	DC CONTROL BUS UNDERVOLTAGE REL	125V DC	G.E. Co.	HGA		
27XHGT, HHT	4 KV UNDERVOLTAGE TRIP AUX. REL				(6), (7)	TRIPS ON UNDERVOLTAGE & TRANSFER TO DIESEL
27AC1, 2, 3	120V INSTR. AC UV AUX. RELAY	120VAC	C-H	POWERED	D40RR11A	
43HGB 43HH11 TS TS	CONTROL TRANSFER SWITCH	125V DC	ELECTRO SWITCH	24	24907B-2	
62HGB, HH11	BKR CLOSING SPRING TIME DELAY REL	125V DC	AGASTAT	ETR		
50NHGB, HH11	GROUND OVERCURRENT SENSOR	—	—	—	(3), (11)	ALARM ONLY
51HGB, HH11	OVERCURRENT RELAY	—	—	—	(3)	
51AUXHGB, HH11	OVERCURRENT AUXILIARY RELAY	24V DC	G.E. Co.	HFA		
52HGB, HH11	CIRCUIT BREAKER	—	—	—	(3)	REC Nº 6009838
52HGB, HH11 AS AS	CIRCUIT BKR AUX SWITCH					PART OF SWGR
52HGB, HH11 CT CT	CIRCUIT BKR CELL INTLK					PART OF SWGR
405627434	CNT SUMP RECIRC. VALVE POS SW					CLOSE WHEN VALVE IS FULLY CLOSED OPEN WHEN VALVE IS OPENED (REC)
LS921, 922 LC920A	RWST LOW LEVEL SW			MOORE	CPT HLPRG	CLOSES ON LOW LVL NON-FAIL SAFE
LS921X1,2 LS922X1,2 LC920X1,2	RWST LOW LEVEL AUX RELAY	120VAC	C-H	POWERED	D40RR40A	

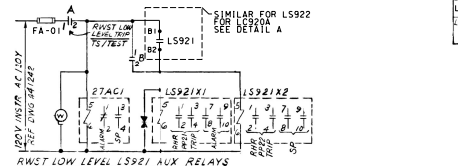

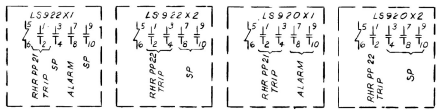

120V INSTR AC CKT Nº	RWST LEVEL INSTR Nº	RWST LEVEL TRIP AUX RELAY RHR PP21	RHR PP22	ALARM CKT	UNDERVOLT AUX. DEV Nº	ALARM CKT.	PANEL LOC	FUSE ID
130V DC	LS921	LS921X1	LS921X2		27AC1	AV0900DF	PIA	FA-01
220VDC	LS922	LS922X1	LS922X2	AL0915DB	27AC2	AV0901DG	PIB	FA-01
330VDC	LC920A	LS920X1	LS920X2		27AC3	AV0902DH	PIC	BA-01

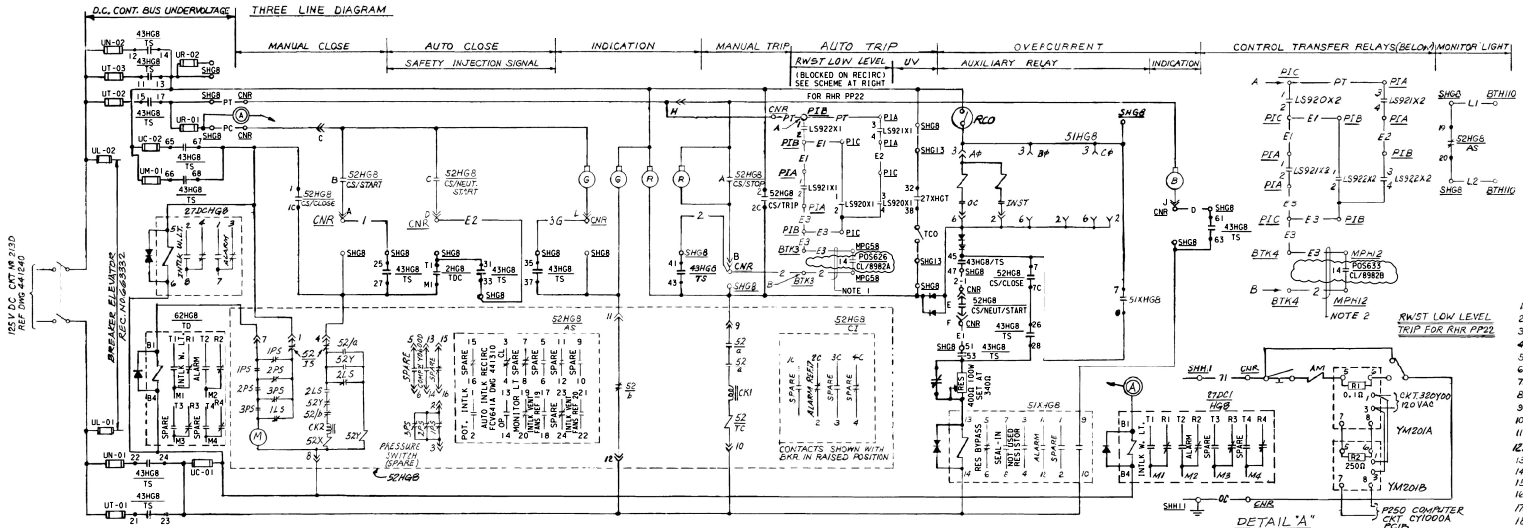

125 V DC CONTROL SCHEMATIC

RESIDUAL HEAT REMOVAL PUMP Nº 21, CIRCUIT Nº G08H00

RESIDUAL HEAT REMOVAL PUMP Nº 22 SIMILAR EXCEPT AS SHOWN IN TABLE BELOW

EQUIPMENT LOCATION NUMBERS

BTH110	TERMINAL BOX AREA "H" Nº 110
CNR	CONTROL BOARD RESIDUAL HEAT
MHGB	RESIDUAL HEAT REMOVAL PUMP Nº 21
SHGB	SWITCHGEAR 4 KV BUS G CUBICLE 8
PIA	INSTRUMENT PANEL A

NOTES:

1. WIRES E3 & 2 BET BTK3 & MHGB LISTED UNDER CKT G58H07, DWG #102754.
2. WIRES E3 & 2 BET BTK4 & MHH12 LISTED UNDER CKT H12H07, DWG #102754.
3. FOR FUSE RATINGS AND TYPE SEE FUSE LIST DWG. 066145.

REFERENCES

1. DESCRIPTION OF ELEC. SCHEMATIC DIAG'S, SYMBOLS & CKT DESIGNATIONS ____ 050003
2. EQUIPMENT LOCATION NUMBERS ____ 163013
3. SINGLE LINE METER & RELAY DIAG 4160 V SYSTEM BUS SECT G & H SH 3 ____ 441230
4. SINGLE LINE METER & RELAY DIAG 125/250 V DC SYSTEM ____ 441240
5. SCHEMATIC DIAG. 4160V BUS DIFFERENTIAL SH 2 ____ 441343
6. SCHEMATIC DIAG. 4160V BUS G AUTOMATIC TRANSFER ____ 441353
7. SCHEMATIC DIAG. 4160V BUS H AUTOMATIC TRANSFER ____ 441354
8. SCHEMATIC DIAG POTENTIAL & SYNCHRONIZING 4160V SYSTEM SH 2 ____ 441340
9. LOGIC DIAGRAM RESIDUAL HEAT REMOVAL PUMPS ____ 102793
10. PIPING SCHEMATIC RESIDUAL HEAT REMOVAL SYSTEM ____ 102010
11. SCHEMATIC DIAG MAIN ANNUNCIATOR SH 1 ____ 500771
12. SCHEMATIC DIAG. MAIN ANNUNCIATOR ____ 441280
13. SCHEMATIC DIAG MONITOR LIGHT BOX C ____ 441454
14. SCHEMATIC DIAGRAM RHR MOV'S ____ 441317
15. SCHEMATIC DIAGRAM SIS MOV'S ____ 441317
16. INSTRUMENT SCHEMATIC LEVEL INSTR SYSTEM SH. 17A ____ 102033
17. SCHEMATIC DIAG. MAIN ANNUNCIATOR SH. 17 ____ 500787
18. R.P.S. CONTROL CIRCUITS SCHEMATIC DIAGRAM ____ 6009838-69
19. SCHEMATIC DIAG AUX & FUEL HANDLING BLDGS VENTILATION SYS (POV1) ____ 454671
20. SCHEMATIC DIAG AUX & FUEL HANDLING BLDGS VENTILATION SYS (POV2) ____ 454678

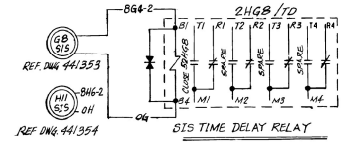

MOTOR Nº	MOTOR LOC Nº	CKT BKR Nº	CIRCUIT Nº	BUS SECTION	DC CKT Nº	BUS UNDERVOLTAGE RELAY	LOCATION	CONTACT TRIP	ALARM CIRCUIT NOS OVERCURRENT	GROUND OVERCURRENT	CONT BUS DC UV	COMPUTER CKT NO	BKR AUX SW BREAKERS CLOSED	AUTO INTLK RECIRC VALVES	AMMETER CIRCUIT CURRENT XDUCER DEV. Nº	180V AC	SIGNAL ISOLATOR DEV. Nº	120V AC	COMPUTER CKT
21	MHGB	52HGB	G08H00	G	213D	27XHGT	SHH13	32 11 38	A10600DC	A10600DG	AW4307DG	CY0600DG	FCV641A		YM200A	820Y00	YM200B	820Y00	CY1001A
22	MHH11	52HH11	H11H00	H	314D	27XHHT	SHH13	26 11 24	A10600DH	A10603DH	AW4207DH	CY0601DH	FCV641B		YM201A	820Y00	YM201B	820Y00	CY1000A

KEY DWG. SECTION 4

NUCLEAR SAFETY RELATED

P.G.&E. SYSTEM PHASE SEQUENCE A-C-B

UNIT 2

DATE	
03-13-2018	
D.D.	ZN54
R.E.	FXC2
I.V.	N/A
P.E.	N/A

REVISION DESCRIPTION: Revised Per DDN-2#1823

ELECTRICAL SCHEMATIC DIAGRAM RESIDUAL HEAT REMOVAL PUMPS

DIABLO CANYON POWER PLANT
PACIFIC GAS AND ELECTRIC COMPANY
SAN FRANCISCO, CALIFORNIA

DWG SCALE:	
BILL OF MATL:	
SUPSDS:	
SUPSD BY:	

DRAWING	SHEET	PAGE	REV
441309	1	0	24

RASTER=441309-1-0.dgn
DDN=441309-1-0.dgn
CAD User=ZN54 Date=03-13-2018