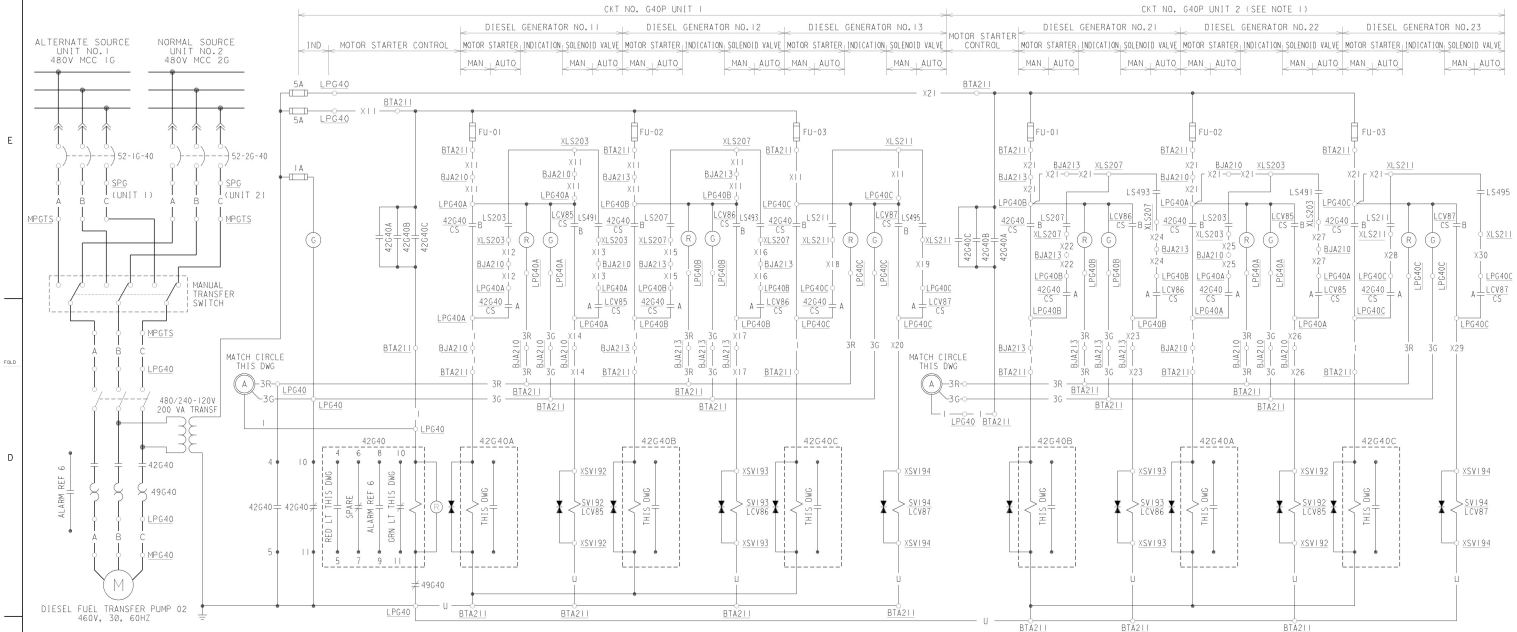

DIESEL FUEL TRANSFER PUMP NO.02 CONTROL CKT NO.G40P (HEADER B)

ALARM CKT TABLE

		DEVICE NO.	CKT
DIESEL FUEL TRANSFER	PP01 OC	49H65	AI4209DH
	PP01 RUN	42H65	AY4219DH
	PP02 OC	49G40	AI4309DG
	PP02 RUN	42G40	AY4319DG
DIESEL OIL STORAGE	TANK 01 HI OR LOW LEVEL	LS458	AL4202D
		LS457	
	TANK 02 HI OR LOW LEVEL	LS460	AL4302D
		LS459	

AUTO CLOSE OPEN

CONTACTS		POSITION CLOSE	AUTO	OPEN	REMARKS
	A		×		THIS DWG
	B			×	THIS DWG
	C		×		SPARE
	D			×	SPARE

MAINTAINED CONTACTS (WESTINGHOUSE CAT*OT2S2 (PER 4R89288)

CONTROL SW	LOCATION	QUANTITY UNIT 1	UNIT 2
LCV88/CS	LPH65A	1	1
LCV89/CS	LPH65B	1	1
LCV90/CS	LPH65C	1	1
LCV85/CS	LPG40A	1	1
LCV86/CS	LPG40B	1	1
LCV87/CS	LPG40C	1	1

SEE NOTE 3

AUTO OFF ON

CONTACTS		POSITION OFF	AUTO	ON	REMARKS
	A		×		THIS DWG
	B			×	THIS DWG
	C		×		SPARE
	D			×	SPARE

MAINTAINED CONTACTS (WESTINGHOUSE CAT*OT2S2 (PER 4R89288)

CONTROL SW	LOCATION	QUANTITY UNIT 1	UNIT 2
42H65 CS	LPH65A	1	1
	LPH65B	1	1
	LPH65C	1	1
42G40 CS	LPG40A	1	1
	LPG40B	1	1
	LPG40C	1	1

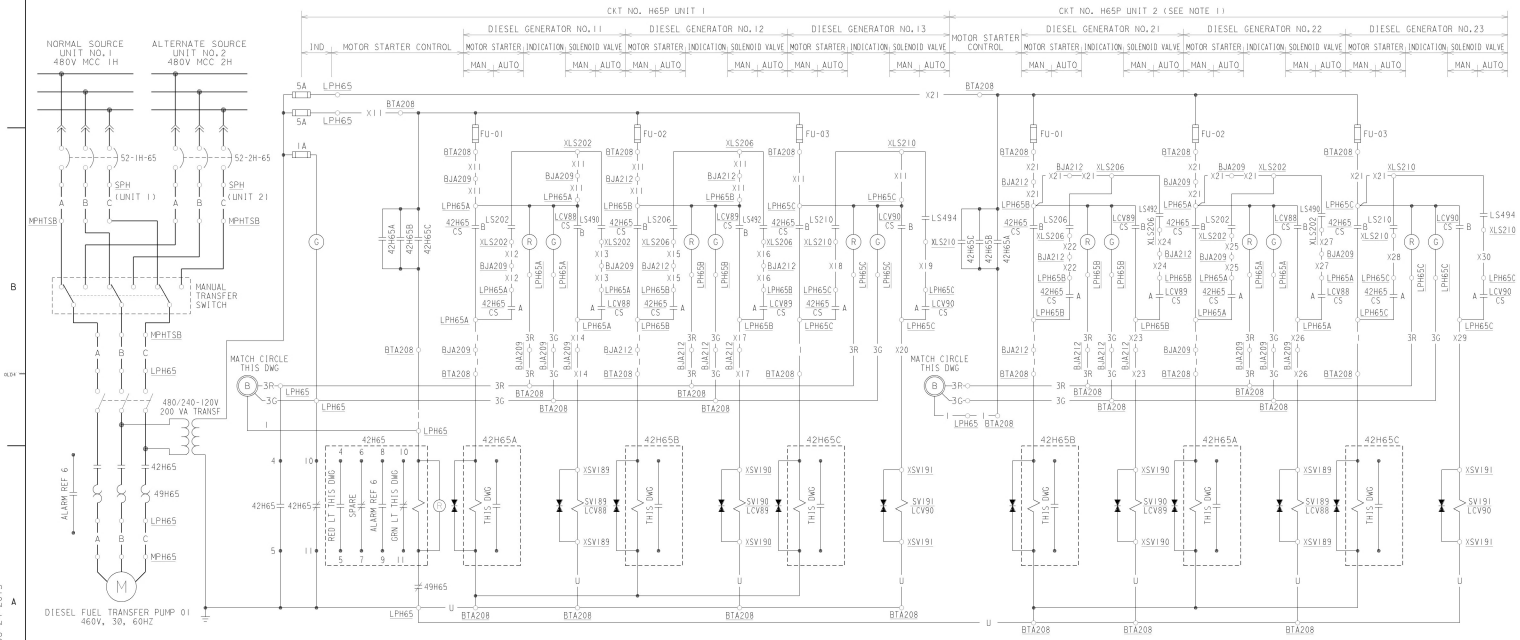

DIESEL FUEL TRANSFER PUMP NO.01 CONTROL CKT NO.H65P (HEADER A)

TABLE OF DEVICES

DEVICE NO.	FUNCTION	RATING	MFR	TYPE	CATALOG OR REF DWG	REMARKS
42G40	STARTER COMBINATION MOTOR STARTER DIESEL FUEL TRANSFER PUMP 02	600V NEMA SIZE 0			2	
49G40	OVERLOAD					
42H65	STARTER COMBINATION MOTOR STARTER DIESEL FUEL TRANSFER PUMP 01	600V NEMA SIZE 0			3	
49H65	OVERLOAD					
52-1G-40	480V MCC 1 BUS G AIR CKT BKR (UNIT 1)				2	
42G40A,B,C	MOTOR STARTER AUX RELAY	120VAC	C-H	R	D40RR10A	
52-1H-65	480V MCC 1 BUS H AIR CKT BKR (UNIT 1)				3	
42H65A,B,C	MOTOR STARTER AUX RELAY	120VAC	C-H	R	D40RR10A	
LS202	LEVEL SW FOR DSL FUEL TK1-1 (HDR A)		MAGNETROL	XA15-1H3A-DNQ	8	STARTS PUMP 01 OPENS LCV88
LS490						
LS203	LEVEL SW FOR DSL FUEL TK1-1 (HDR B)		MAGNETROL	XA15-1H3A-DNQ	8	STARTS PUMP 02 OPENS LCV85
LS491						
LS206	LEVEL SW FOR DSL FUEL TK1-2 (HDR A)		MAGNETROL	XA15-1H3A-DNQ	8	STARTS PUMP 01 OPENS LCV89
LS492						
LS207	LEVEL SW FOR DSL FUEL TK1-2 (HDR B)		MAGNETROL	XA15-1H3A-DNQ	8	STARTS PUMP 02 OPENS LCV86
LS493						
LS210	LEVEL SW FOR DSL FUEL TK1-3 (HDR A)		MAGNETROL	XA15-1H3A-DNQ	8	STARTS PUMP 01 OPENS LCV90
LS494						
LS211	LEVEL SW FOR DSL FUEL TK1-3 (HDR B)		MAGNETROL	XA15-1H3A-DNQ	8	STARTS PUMP 02 OPENS LCV87
LS495						
LS457	DIESEL FUEL OIL STORAGE TK 01 LOW LEVEL				8	
LS458	DIESEL FUEL OIL STORAGE TK 01 HI LEVEL				8	
LS459	DIESEL FUEL OIL STORAGE TK 02 LOW LEVEL				8	
LS460	DIESEL FUEL OIL STORAGE TK 02 HI LEVEL				8	
SV189	SOLENOID VALVE FOR DSL FUEL OIL TK 1-1	120VAC			8	
SV190	SOLENOID VALVE FOR DSL FUEL OIL TK 1-2	120VAC			8	
SV191	SOLENOID VALVE FOR DSL FUEL OIL TK 1-3	120VAC			8	
SV192	SOLENOID VALVE FOR DSL FUEL OIL TK 1-1	120VAC			8	
SV193	SOLENOID VALVE FOR DSL FUEL OIL TK 1-2	120VAC			8	
SV194	SOLENOID VALVE FOR DSL FUEL OIL TK 1-3	120VAC			8	
52-2G-40	480V MCC 1 BUS G AIR CKT BKR (UNIT 2)				4	
52-2H-65	480V MCC 1 BUS H AIR CKT BKR (UNIT 2)				5	
LS202	LEVEL SW FOR DSL FUEL TK2-1 (HDR A)		MAGNETROL	XA15-1H3A-DNQ	8	STARTS PUMP 01 OPENS LCV88
LS490						
LS203	LEVEL SW FOR DSL FUEL TK2-1 (HDR B)		MAGNETROL	XA15-1H3A-DNQ	8	STARTS PUMP 02 OPENS LCV85
LS491						
LS206	LEVEL SW FOR DSL FUEL TK2-2 (HDR A)		MAGNETROL	XA15-1H3A-DNQ	8	STARTS PUMP 01 OPENS LCV89
LS492						
LS207	LEVEL SW FOR DSL FUEL TK2-2 (HDR B)		MAGNETROL	XA15-1H3A-DNQ	8	STARTS PUMP 02 OPENS LCV86
LS493						
LS210	LEVEL SW FOR DSL FUEL TK2-3 (HDR A)		MAGNETROL	XA15-1H3A-DNQ	8	STARTS PUMP 01 OPENS LCV87
LS494						
LS211	LEVEL SW FOR DSL FUEL TK2-3 (HDR B)		MAGNETROL	XA15-1H3A-DNQ	8	STARTS PUMP 02 OPENS LCV90
LS495						
SV189	SOLENOID VALVE FOR DSL FUEL OIL TK 2-2	120VAC			8	
SV190	SOLENOID VALVE FOR DSL FUEL OIL TK 2-1	120VAC			8	
SV192	SOLENOID VALVE FOR DSL FUEL OIL TK 2-2	120VAC			8	
SV193	SOLENOID VALVE FOR DSL FUEL OIL TK 2-1	120VAC			8	
LS260	LEVEL SWITCH FOR DIESEL FUEL PUMPS				8	
LS261	LEVEL SWITCH				8	
PS595	PRESSURE SWITCH				8	
PS597	PRESSURE SWITCH				8	
2DF01	TIMING RELAY	—	AGASTAT	—	TR1413D	
2DF02	TIMING RELAY	—	AGASTAT	—	TR1413D	

SEE NOTE 2

DEVICES INSTALLED WITH UNIT 2

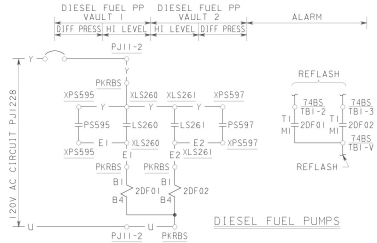

DIESEL FUEL PUMPS

EQUIPMENT LOCATIONS

SPG - 480V MOTOR CONTROL CENTER 1 BUS G
MPGTS - DIESEL FUEL OIL PUMP 02 TRANSFER SWITCH
MPHTSB - DIESEL FUEL OIL PUMP 01 TRANSFER SWITCH
LPG40 - LOCAL STARTER DIESEL FUEL TRANSFER PUMP 02
MPG40 - DIESEL FUEL TRANSFER PUMP 02
LPG40A - LOCAL CONTROL STA FUEL XFER PP 02 AT DSL 11
LPH65 - LOCAL STARTER DIESEL FUEL TRANSFER PUMP 01
XLS202 - LS202 DIESEL FUEL OIL DAY TANK 1-1
XSV189 - SV189 DIESEL FUEL OIL DAY TANK 1-1
BJA209 - JUNCTION BOX A209
BTA208 - TERMINAL BOX A208
PJ11-2 - 120/208V POWER PANEL 11-2
PKRBS - BUILDING SUMP LOCAL ANNUNCIATOR
XLS260 - LS260 DIESEL FUEL PUMP LEVEL SWITCH
XPS595 - PS595 DIESEL FUEL PUMP PRESSURE SWITCH

REFERENCES

	DWG NO.
1. DESCRIPTION OF ELEC SCHEM DIAG SYMBOLS & EQUIP LOC NOS.	050003
2. S/L METER & RELAY DIAG - 480V SYS BUS SECTION 1G	437542
3. S/L METER & RELAY DIAG - 480V SYS BUS SECTION 1H	437543
4. S/L METER & RELAY DIAG - 480V SYS BUS SECTION 2G	441238
5. S/L METER & RELAY DIAG - 480V SYS BUS SECTION 2H	441239
6. SCHEM DIAG - MAIN ANNUNCIATOR, SHS. 15 & 16	(U1) 501135,36
	(U2) 500785,86
7. PIPING SCHEM - DIESEL ENGINE-GENERATOR SYS	(U1) 102021
	(U2) 108021
8. INSTRUMENT REFERENCE	(U1 & U2) 102038
9. CIRCUIT SCHED - 480V BUS SECTIONS F,G & H (UNIT 2)	102754
10. INSTRUMENT SCHEM - LEVEL INSTRUMENT SYS	(U1) 102033
	(U2) 108033

NOTES

1. THIS CIRCUIT IS COVERED BY DWG NO. 102754.
2. THE START SETTING FOR THE HEADER "A" LEVEL SWITCHES WILL BE SLIGHTLY DIFFERENT THAN THOSE FOR HEADER "B" WHICH PREVENTS STARTING BOTH PUMPS AT THE SAME TIME.
3. PUMP CONTROL SWITCHES AT ALL FIVE DIESEL GENERATORS MUST BE IN OFF POSITION TO PREVENT PUMP FROM STARTING.

KEY DWG. SECTION 10

P.G.&E. SYSTEM PHASE SEQUENCE A-C-B

NUCLEAR SAFETY RELATED

UNIT 1 & 2

DATE	
08-24-2015	
D.D.	PNWB
R.E.	RXCZ
I.V.	FXCZ
P.E.	N/A

REVISION DESCRIPTION: REVISED PER DCN-24-1399

ELECTRICAL
SCHEMATIC DIAGRAM
DIESEL FUEL TRANSFER PUMPS

DIABLO CANYON POWER PLANT
PACIFIC GAS AND ELECTRIC COMPANY
SAN FRANCISCO, CALIFORNIA

DWG SCALE:
BILL OF MATL:
SUPSDS:
SUPSD BY:

DRAWING	SHEET	PAGE	REV
437657	1	0	23

DRAWING NUMBER 437657 1

RASTER-437657s1.dgn
DGN-437657s1.dgn
CAD User-PNWB Date-08-24-2015