1717 Wakonade Drive
Welch, MN 55089

June 22, 2023

L-PI-23-006
10 CFR 50.90

ATTN: Document Control Desk
U.S. Nuclear Regulatory Commission
Washington, DC 20555-0001

Prairie Island Nuclear Generating Plant, Units 1 and 2
Docket Nos. 50-282 and 50-306
Renewed Facility Operating License Nos. DPR-42 and DPR-60

License Amendment Request to Revise Technical Specification 3.7.8 Required Actions

Reference: 1) NRC Letter to NSPM, "Prairie Island Nuclear Generating Plant, Units 1 and 2 – Issuance of Amendment Nos. 237 and 225 re: Inoperable Cooling Water System Supply Header (EPID L-2021-LLA-0187)," dated November 23, 2021. (NRC ADAMS Accession No. ML21312A021)

Pursuant to 10 CFR 50.90, Northern States Power Company, a Minnesota corporation, doing business as Xcel Energy (hereafter "NSPM"), hereby requests an amendment to the Technical Specifications (TS) for the Prairie Island Nuclear Generating Plant (PINGP). The proposed change revises TS 3.7.8, Cooling Water (CL) System, Required Actions for Condition B to eliminate unnecessarily restrictive requirements and removes reference to the expired one-time allowance of Unit 1 and Unit 2 License Amendments 237 and 225 respectively. (Reference 1)

The enclosure provides NSPM's evaluation of the proposed change. Attachment 1 to the enclosure provides the marked-up PINGP TS pages. Attachment 2 to the enclosure provides re-typed copies of the PINGP TS pages. Attachment 3 to the enclosure provides the marked-up PINGP TS Bases pages, which are being provided for information only.

In accordance with 10 CFR 50.91(b)(1), a copy of this application, with the enclosure, is being provided to the designated Minnesota official.

NSPM requests approval of the proposed amendment within 12 months of acceptance with an implementation period of 90 days.

NSPM has evaluated the changes proposed in this License Amendment Request in accordance with 10 CFR 50.92 and concluded that they involve no significant hazards consideration.

If there are any questions or if additional information is required, please contact Mr. Jeff Kivi at (612) 330-5788 or Jeffrey.L.Kivi@XcelEnergy.com.

Summary of Commitments

This letter makes no new commitments and no revisions to existing commitments.

I declare under penalty of perjury that the foregoing is true and correct.
Executed on 6/22/23.

Christopher P. Domingos
Site Vice President, Monticello and Prairie Island Nuclear Generating Plants
Northern States Power Company – Minnesota

Enclosure

cc: Administrator, Region III, USNRC
Project Manager, Prairie Island, USNRC
Resident Inspector, Prairie Island, USNRC
State of Minnesota

ENCLOSURE

PRAIRIE ISLAND NUCLEAR GENERATING PLANT, UNITS 1 AND 2

Evaluation of the Proposed Change

License Amendment Request to Revise Technical Specification 3.7.8 Required Actions

ATTACHMENTS:

1. Technical Specification Pages (Markup)
2. Technical Specification Pages (Retyped)
3. Technical Specification Bases Pages (Markup – for information only)

License Amendment Request to Revise Technical Specification 3.7.8 Required Actions

1.0 SUMMARY DESCRIPTION

Pursuant to 10 CFR 50.90, Northern States Power Company, a Minnesota corporation, doing business as Xcel Energy (hereafter "NSPM"), hereby requests an amendment to the Technical Specifications (TS) for the Prairie Island Nuclear Generating Plant (PINGP). The proposed change revises TS 3.7.8, Cooling Water (CL) System, Required Actions for Condition B to eliminate unnecessarily restrictive requirements and removes reference to the expired one-time allowance of Unit 1 and Unit 2 License Amendments 237 and 225, respectively. (Reference 1)

2.0 DETAILED DESCRIPTION

2.1 System Design and Operation

The CL system is a shared system common to both units. The CL system provides a heat sink for the removal of process and operating heat from safety related components during a Design Basis Accident or transient. During normal operation and a normal shutdown, the CL system also provides this function for various safety related and nonsafety related components. The safety related function is covered by TS 3.7.8.

The CL system consists of a common CL pump discharge header for the five CL pumps that directs flow into two separate, 100 percent capacity CL headers. Each header then supplies loops in the turbine and auxiliary buildings and containments for the two units. See Figure 1, at the end of this section, for a simplified diagram of the CL system.

Each safeguards CL train consists of:

a. One 100% capacity vertical safeguards pump (12 diesel driven CL pump or 121 motor driven CL pump when aligned for Train A safeguards use; 22 diesel driven CL pump or 121 motor driven CL pump when aligned for Train B safeguards use);
b. A header; and
c. Piping, valving, instrumentation and controls.

Principal post-accident heat loads supplied by the CL system include Unit 1 diesel generators (Unit 2 diesel generators do not use the CL system for cooling), control room chillers, component cooling heat exchangers, containment fan coil units, and the instrument air compressors. A single safeguards CL pump can provide sufficient cooling in one unit during the injection and recirculation phases of a postulated loss of coolant accident (LOCA) plus sufficient cooling to maintain the second unit in a safe shutdown condition. The capacity of

each motor-driven pump and each diesel driven CL pump is nominally 17,500 gpm. This exceeds the maximum flow required for a single pump serving one unit in hot shutdown and a second unit in the long-term post-accident condition, which is calculated to be less than 14,500 gpm.

Normal operation utilizes two horizontal pumps with the 121 motor driven pump as a standby. Two vertical diesel driven CL pumps are provided for emergency operation. The diesel driven CL pumps are used whenever a Safety Injection is initiated, when discharge header pressure drops below its setpoint, or on a loss of offsite power (due to loss of motor driven pumps and resultant low discharge header pressure).

As stated above, two diesel driven CL pumps are provided common to both Units 1 and 2. Train “A” Safety Injection signal from either unit will start 12 diesel driven CL pump. Train “B” Safety Injection signal from either unit will start 22 diesel driven CL pump. The 121 motor driven pump will also start upon any of these signals, but will trip if both diesel driven CL pumps operate. If a diesel driven CL pump fails to start, the 121 motor driven CL pump will continue to operate. The 121 motor driven CL pump and the diesel driven CL pumps also start automatically on a drop in their respective cooling water discharge header pressure:

- Header pressure below 80 psig starts the 121 motor driven CL pump.
- Header pressure below 75 psig in cooling water discharge header A(B) starts 12(22) diesel driven CL pump after a time delay of 15 seconds. The 15 second time delay allows the 121 motor driven pump to start and attempt to restore the header pressure, preventing needless diesel driven CL pump starts.

In the event of a loss of offsite power, the loss of the horizontal motor driven pumps results in lowering discharge header pressure. When the low pressure setpoint is reached, the associated diesel driven CL pump starts and will provide adequate cooling to the associated Unit 1 diesel generator and other cooling loads. Further, the 121 motor driven CL pump, upgraded to a safeguards status, having an essential safeguards diesel-backed power supply provides a diverse means of providing cooling water independent of diesel driven CL pumps. One diesel driven CL pump (or the 121 motor driven CL pump aligned for safeguards) is sufficient to meet all the cooling system loads required for the safe shutdown of both units (accident in only one unit).

The 121 motor driven CL pump also functions as a replacement when a diesel driven CL pump is taken out of service. The 121 motor driven CL pump is aligned manually to the appropriate train of Unit 2 safeguards power, depending upon which diesel driven CL pump is out of service. The motor operated valves are placed in the desired position and administratively disabled.

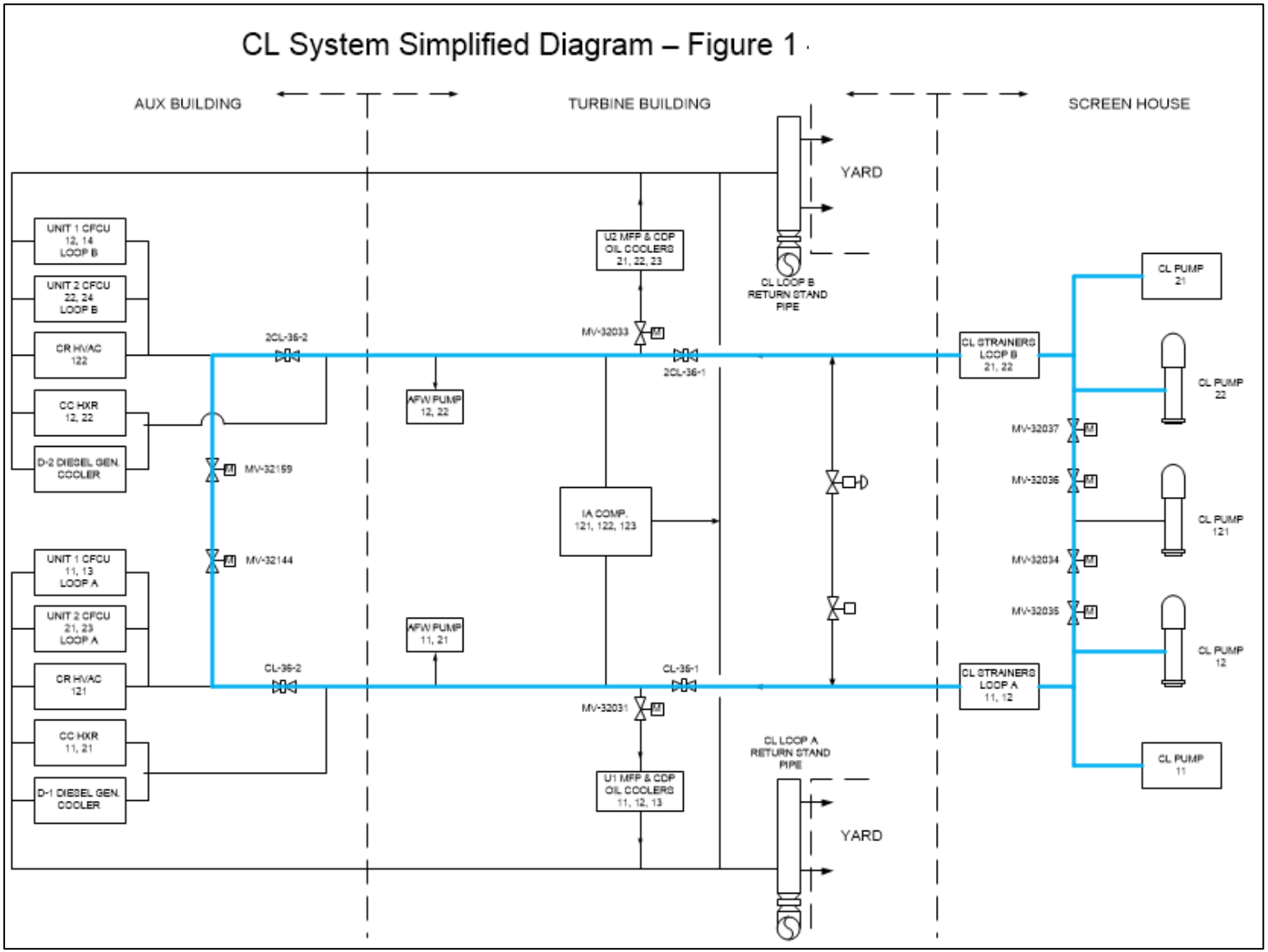
CL System Simplified Diagram – Figure 1
AUX BUILDING
TURBINE BUILDING
SCREEN HOUSE
YARD
UNIT 1 CFCU 12, 14 LOOP B
UNIT 2 CFCU 22, 24 LOOP B
CR HVAC 122
CC HXR 12, 22
D-2 DIESEL GEN. COOLER
UNIT 1 CFCU 11, 13 LOOP A
UNIT 2 CFCU 21, 23 LOOP A
CR HVAC 121
CC HXR 11, 21
D-1 DIESEL GEN. COOLER
2CL-36-2
MV-32159
MV-32144
CL-36-2
AFW PUMP 12, 22
AFW PUMP 11, 21
U2 MFP & CDP OIL COOLERS 21, 22, 23
MV-32033
2CL-36-1
IA COMP. 121, 122, 123
CL-36-1
MV-32031
U1 MFP & CDP OIL COOLERS 11, 12, 13
CL LOOP B RETURN STAND PIPE
CL LOOP A RETURN STAND PIPE
YARD
CL STRAINERS LOOP B 21, 22
CL STRAINERS LOOP A 11, 12
MV-32037
MV-32036
MV-32034
MV-32035
CL PUMP 21
CL PUMP 22
CL PUMP 121
CL PUMP 12
CL PUMP 11

2.2 Current Technical Specification Requirements

TS 3.7.8 Condition B is entered if one CL header is inoperable. Required Action B.1 is to verify the vertical (121) motor driven CL pump operable and Required Action B.2 verifies the opposite train diesel driven CL pump is operable; both Required Actions B.1 and B.2 must be completed within 4 hours of entry into Condition B. Required Action B.3 restores the inoperable CL supply header to operable status with a Completion Time of 72 hours or in accordance with the Risk Informed Completion Time (RICT) Program of TS 5.5.18.

The Completion Time for Required Action B.1 of TS 3.7.8 includes a footnote that addressed a one-time allowance approved with Unit 1 and Unit 2 license amendments 237 and 225, respectively. The one-time allowance only applied between November 28, 2021, and December 28, 2021, in support of the CL supply header piping replacement project.

2.3 Reason for Proposed Change

Requiring that both TS 3.7.8, Required Actions B.1 and B.2 be completed is unnecessarily restrictive because it requires two 100 percent capacity CL pumps (the 121 motor driven CL pump and the diesel driven CL pump for the operable header) to be operable when only one of the pumps is required to meet the CL system specified safety function. The current TS 3.7.8 Required Actions B.1 and B.2 could result in a situation where a Mode change is required on both units within ten hours even though one train of CL (a header and a safeguards pump) remains operable and capable of performing its specified safety function. Having two safeguards CL pumps operable to supply the operable CL header may be used to provide redundancy, but is not necessary to maintain the CL system's ability to perform its specified safety function.

The current TS 3.7.8, Required Actions B.1 and B.2 result in a required redundancy while in TS 3.7.8, Condition B, which is unnecessary. Per NRC Generic Letter 80-30 (Reference 2), the specified Completion Time in which to take a Required Action while in a TS Condition is a temporary relaxation of the single failure criterion. As such, there is no need to postulate additional failures while in a TS Condition. Therefore, the current TS requirement that two safeguards CL pumps associated with the operable header to be verified operable is overly restrictive.

Removing the footnote removes reference to the expired one-time allowance of Units 1 and 2 Amendments 237 and 225.

2.4 Description of Proposed Change

NSPM proposes to change the TS 3.7.8, Condition B, Required Actions from verification of operability of both CL pumps that supply the operable CL header to verification of the operability of a safeguards CL pump supplying the operable CL header. Specifically, NSPM proposes to combine TS 3.7.8 Required Actions B.1 and B.2 into a single Required Action B.1 to verify operability of a safeguards pump on the opposite train (renumbering accordingly), and

to add a note to Required Action B.1 to clarify that the opposite train diesel driven CL pump may be verified operable by administrative means. The proposed change also removes reference to an expired one-time allowance by deleting the footnote associated with the Completion Time for Required Action B.1 and deletes an unnecessary continuation on page 3.7.8-2. The proposed changes can be seen in the TS mark-ups of Attachment 1 and in the re-typed TS pages of Attachment 2.

3.0 TECHNICAL EVALUATION

The proposed change to revise the Required Actions for TS 3.7.8, Condition B has a low safety impact because the TS Condition will still require that the redundant header is capable of performing its specified safety function. The proposed change will verify that at least one safeguards CL pump (either diesel driven or motor driven aligned in safeguards mode) capable of providing required flow supporting the operable header is operable. This single CL pump can provide sufficient cooling in one unit during the injection and recirculation phases of a postulated LOCA plus sufficient cooling to maintain the second unit in a safe shutdown condition.

One CL train, in conjunction with the component cooling water system and a 100% capacity containment cooling system, has the capability to remove long term core decay heat following a design basis LOCA. This prevents the containment sump fluid from increasing in temperature during the recirculation phase following a LOCA and provides for a gradual reduction in the temperature of this fluid as it is supplied to the reactor coolant system by the emergency core cooling system pumps. The CL system is designed to perform its function with a single failure of any active component, assuming the loss of offsite power. This assumes a maximum CL temperature of 95°F occurring simultaneously with design heat loads for the system.

As noted above, additional failures need not be postulated while in a TS Condition because the Completion Time given in TS for Required Actions is a temporary relaxation of the single failure criterion. So, the assumptions in the safety analyses described in the Updated Safety Analysis Report (USAR) are unaffected by the proposed change because the operable header on the CL system will remain capable of mitigating a postulated LOCA on one unit and maintaining the other unit in a safe shutdown condition.

<u>Risk Insights</u>

During the period when one CL header is inoperable and TS 3.7.8, Condition B applies, the opposite train CL supply header must remain operable and at least one associated safeguards CL pump must be verified operable to ensure the safety functions of the CL system and supported systems are maintained. During this period, the equipment associated with the operable CL train increases in risk importance due to the loss of redundancy. The following discussion provides NSPM’s insights on the risk impact of the proposed changes.

During periods of CL header inoperability, risk is managed using two NSPM programs depending on the duration of the inoperability. Prior to exceeding the TS 3.7.8, Condition B Required Action (current Required Action B.3) Completion Time of 72 hours for restoring the inoperable CL header to operable status, risk is managed using the 10 CFR 50.65 Requirements for Monitoring the Effectiveness of Maintenance at Nuclear Power Plants (Maintenance Rule) (a)(4) program. After exceeding the TS 3.7.8, Condition B, current Required Action B.3 (front stop) or when it is known that the front stop will be exceeded the risk is managed using both the Maintenance Rule (a)(4) and RICT programs. Both programs utilize the PINGP probabilistic risk assessment model and current plant configuration to evaluate the increase in risk associated with the configuration and implement risk management actions (RMAs) targeting the success of redundant or diverse systems, structures, and components (SSCs) and, if possible, reduce the frequency of initiating events which call upon affected SSCs (CL and the systems it supports). RMAs may include:

- protecting equipment such as opposite train emergency core cooling system, containment spray pumps, containment fan coils, auxiliary feedwater pumps, component cooling water pumps, Unit 1 diesel generators (Unit 2 diesel generators do not rely on CL), opposite train diesel driven CL pump, and instrument air compressors;
- deferring unrelated maintenance and testing activities that could generate an initiating event that could challenge the operable SSCs;
- establishing fire watches and/or excluding hot work in fire zones of highest or higher than normal fire risk to reduce the potential for fire initiating events; and
- establishing compensatory action, shift brief, or standing order that focuses on actions operators will take in response to an initiating event if an associated operable SSC fails.

The number and type of RMAs applied to any given configuration are commensurate with the magnitude of the increase in risk for the configuration.

NSPM proposes to keep the current 72-hour Completion Time for the Required Action to restore the CL header to operable status (current Required Action B.3, which is proposed to be renumbered to Required Action B.2). Under the proposed changes, the redundant operable CL train is still verified operable with at least one 100% capacity pump supporting the operable train. A Completion Time of 72 hours is consistent with the Completion Times for Required Actions that restore operability to other safeguards systems in a Condition with one train inoperable, such as:

- emergency core cooling system (TS 3.5.2, Condition A),
- containment spray system (TS 3.6.5, Condition A),
- auxiliary feedwater system (TS 3.7.5, Condition B), and
- component cooling water system (TS 3.7.7, Condition A).

A Completion Time of 72 hours is also consistent with the standard technical specifications (STS) of NUREG-1431 for STS 3.7.8, Service Water System (SWS), which is the equivalent of the PINGP TS 3.7.8 for the CL system. Specifically, the STS 3.7.8 Completion Time for Condition A (One SWS train inoperable), Required Action A.1 (Restore SWS train to operable status), is 72 hours.

As noted above, the 72-hour Completion Time for TS 3.7.8, Required Action is a front stop under the RICT program. A review of RICT estimates and Risk Management Action Times (RMATs), using the current 72-hour Completion Time found:

CL Header OOS	121 CL Pump Status	Unit Status	Unit 1 RMAT	U1 RICT	Unit 2 RMAT	U2 RICT
Train A	Available	Unit 1: Mode 1 Unit 2: Mode 1	3 days	30 days	4 days	30 days
	Unavailable		3 days	30 days	4 days	30 days
	Available	Unit 1: Below Mode 3 Unit 2: Mode 1	N/A	N/A	>30 days	30 days
	Unavailable				>30 days	30 days
Train B	Available	Unit 1: Mode 1 Unit 2: Mode 1	5 days	30 days	4 days	30 days
	Unavailable		5 days	30 days	4 days	30 days
	Available	Unit 1: Mode 1 Unit 2: Below Mode 3	>30 days	30 days	N/A	N/A
	Unavailable		>30 days	30 days		

Note: All cases run have no equipment out of service (OOS) other than the stated components. The cases with both units in Mode 1 represent likely unplanned RICTs. The cases with one unit below Mode 3 represent likely planned RICTs. RICT is not-applicable for a unit below Mode 3.

4.0 REGULATORY ANALYSIS

4.1 Applicable Regulatory Requirements/Criteria

4.1.1 10 CFR 50.36

10 CFR 50.36, Technical Specifications, defines the content required in licensee TS. Specifically, 10 CFR 50.36(c)(2)(i) requires that the TS include limiting conditions for operation (LCOs) that are the lowest functional capability or performance levels of equipment required for safe operation of the facility. LCO 3.7.8, Cooling Water (CL) System, satisfies Criterion 3 of 10 CFR 50.36(c)(2)(ii). The proposed change revises TS 3.7.8 Required Actions to make them less restrictive while still requiring that one operable CL header supplied by an operable safeguards CL pump remains if the opposite train CL header is inoperable. A single safeguards CL pump (either the diesel driven CL pump associated with the operable header or the 121 motor driven CL pump aligned for safeguards service on the operable header) is capable of supplying sufficient cooling in one unit during the injection and recirculation phases of a postulated LOCA plus sufficient cooling to maintain the second unit in a safe shutdown condition.

The existing TS 3.7.8 Bases state that Required Action B.1 ensures that the 121 motor driven CL pump may be used to provide redundancy for the safeguards CL pump on the operable header. The proposed change would revise this discussion to note the Required Actions ensure either the 121 motor driven CL pump (aligned for safeguards) or the diesel driven CL pump is operable to supply the operable header. The CL System satisfies Criterion 3 of 10

CFR 50.36(c)(2)(ii) as a system that is part of the primary success path which functions to mitigate a design basis accident that assumes failure of or presents a challenge to the integrity of a fission product barrier. The CL System will continue to satisfy Criterion 3 under the proposed change because, while the number of CL pumps supplying the operable CL header is reduced from two to one, only one safeguards CL pump is required to supply sufficient cooling in one unit during a postulated LOCA in addition to sufficient cooling to maintain the non-accident unit is a safe shutdown condition.

The removal of the footnote approved by Unit 1 and Unit 2 Amendments 237 and 225, respectively, removes an expired one-time allowance that is no longer relevant.

Based on this evaluation, the proposed change continues to support compliance with 10 CFR 50.36(c)(2).

4.1.2 Principal Design Criteria

PINGP was not licensed to the 10 CFR 50, Appendix A, General Design Criteria (GDC). PINGP was designed and constructed to comply with NSPM's understanding of the intent of the AEC General Design Criteria for Nuclear Power Plant Construction Permits, as proposed on July 10, 1967. Since the construction of the plant was significantly completed prior to the issuance of the February 20, 1971, 10CFR50, Appendix A GDC, the plant was not reanalyzed and the Final Safety Analysis Report (FSAR) was not revised to reflect these later criteria. However, the AEC Safety Evaluation Report acknowledged that the AEC staff assessed the plant, as described in the FSAR, against the Appendix A design criteria and "...are satisfied that the plant design generally conforms to the intent of these criteria."

Criterion 4 – Sharing of Systems
Reactor facilities shall not share systems or components unless it is shown safety is not impaired by the sharing.

The PINGP CL System includes a ring header which is shared by Units 1 and 2 and can be isolated automatically to provide two redundant independent sources of cooling water for all essential services. One-half of essential services for each Unit is supplied from each side of the isolable loop. Each side of the loop is designed to supply the needs for all essential services for both Units. A single operable safeguards CL pump on the operable header is capable of supplying sufficient cooling in one unit during the injection and recirculation phases of a postulated LOCA plus sufficient cooling to maintain the second unit in a safe shutdown condition.

The proposed change to the Required Actions of TS 3.7.8 still requires at least one operable CL pump to support the remaining CL header and to support both PINGP Units as required. Therefore, PINGP conformance to Criterion 4 is unaffected by the proposed change.

Criterion 37 – Engineered Safety Features Basis for Design
Engineered safety features shall be provided in the facility to back up the safety provided by the core design, the reactor coolant pressure boundary, and their protection systems. As a minimum, such engineered safety features shall be designed to cope with any size reactor coolant pressure boundary break up to and including the circumferential rupture of any pipe in that boundary assuming unobstructed discharge from both ends.

The CL system is a supporting system for the Engineered Safety Features and is designed in accordance with Criterion 37.

The proposed change to revise the Required Actions of TS 3.7.8, has no impact on the permanent physical configuration, design, or function of the CL system. One safeguards CL pump will support the remaining CL header and is capable of supplying sufficient cooling in one unit during the injection and recirculation phases of a postulated LOCA plus sufficient cooling to maintain the second unit in a safe shutdown condition. Therefore, PINGP conformance to Criterion 37 is unaffected by the proposed changes.

Criterion 41 – Engineered Safety Features Performance Capability
Engineered safety features such as emergency core cooling and containment heat removal systems shall provide sufficient performance capability to accommodate partial loss of installed capacity and still fulfill the required safety function. As a minimum, each engineered safety feature shall provide this required safety function assuming a failure of a single active component.

The PINGP CL system has sufficient redundancy and duplication incorporated into its design to insure it will perform its function adequately even with the loss of a single active component.

The proposed change to revise the Required Actions of TS 3.7.8, has no impact on the permanent physical configuration, design, or function of the CL system. One operable safeguards CL pump will support the remaining CL header and is capable of supplying sufficient cooling in one unit during the injection and recirculation phases of a postulated LOCA plus sufficient cooling to maintain the second unit in a safe shutdown condition. Therefore, the single failure criterion is met and PINGP conformance to Criterion 41 is unaffected by the proposed changes.

Criterion 52 – Containment Heat Removal System
Where active heat removal systems are needed under accident conditions to prevent exceeding containment design pressure, at least two systems, preferably of different principles, each with full capacity, shall be provided.

The PINGP CL system provides cooling flow to the containment Fan Coil Units (FCUs). The containment FCUs serve as part of one of two independent containment heat removal systems.

The proposed change to revise the Required Actions of TS 3.7.8, has no impact on the permanent physical configuration, design, or function the CL system. One safeguards CL pump will support the remaining CL header and is capable of supplying sufficient cooling in one unit during the injection and recirculation phases of a postulated LOCA plus sufficient cooling to maintain the second unit in a safe shutdown condition. Therefore, PINGP conformance to Criterion 52 is unaffected by the proposed changes.

4.2 No Significant Hazards Consideration Determination

Pursuant to 10 CFR 50.90, Northern States Power Company, a Minnesota corporation, doing business as Xcel Energy (hereafter "NSPM"), hereby requests an amendment to the Technical Specifications (TS) for the Prairie Island Nuclear Generating Plant (PINGP). The proposed change revises TS 3.7.8, Cooling Water (CL) System, Required Actions for Condition B to eliminate unnecessarily restrictive requirements and removes reference to the expired one-time allowance of Unit 1 and Unit 2 License Amendments 237 and 225, respectively. (NRC ADAMS Accession No. ML21312A021)

NSPM has evaluated the proposed amendment against the standards in 10 CFR 50.92 and has determined that the operation of the PINGP in accordance with the proposed amendment presents no significant hazards. NSPM's evaluation against each of the criteria in 10 CFR 50.92 follows.

1. Does the proposed change involve a significant increase in the probability or consequences of an accident previously evaluated?

   Response: No

   The CL system is not an initiator of any accident previously evaluated. As a result, the probability of an accident previously evaluated is not increased by the proposed change. One safeguards CL pump is capable of supplying sufficient cooling in one unit during the injection and recirculation phases of a postulated loss of coolant accident (LOCA) plus sufficient cooling to maintain the second unit in a safe shutdown condition; therefore, the proposed change will not significantly increase consequences of any of the accidents that CL mitigates. Removal of the footnote added with Amendments 237 and 225 is editorial in nature and eliminates an expired one-time allowance.

   Therefore, the proposed change does not involve a significant increase in the probability or consequences of an accident previously evaluated.

2. Does the proposed change create the possibility of a new or different kind of accident from any accident previously evaluated?

   Response: No
   The proposed change revises the Required Actions of TS 3.7.8 to verify at least one operable safeguards CL pump associated with the operable header instead of verifying

two safeguards CL pumps are operable. The proposed change revises the Required Actions of TS 3.7.8 to verify operability of one safeguards cooling water pump on the operable header. One safeguards CL pump is capable of supplying sufficient cooling in one unit during the injection and recirculation phases of a postulated LOCA plus sufficient cooling to maintain the second unit in a safe shutdown condition. Removal of the footnote added with Amendments 237 and 225 is editorial in nature and eliminates an expired one-time allowance.

Therefore, the proposed change does not create the possibility of a new or different kind of accident from any previously evaluated.

3. Does the proposed change involve a significant reduction in a margin of safety?

Response: No

The proposed change revises the Required Actions of TS 3.7.8 to verify at least one operable safeguards CL pump associated with the operable header instead of verifying two safeguards CL pumps are operable. One safeguards CL pump is capable of supplying sufficient cooling in one unit during the injection and recirculation phases of a postulated LOCA plus sufficient cooling to maintain the second unit in a safe shutdown condition. Neither the maximum required CL flow nor the capacity of any of the safeguards CL pumps is affected by the proposed change. Therefore, the supported CL header will remain capable of performing its specified safety function with only one safeguards pump operable. Removal of the footnote added with Amendments 237 and 225 is editorial in nature and eliminates an expired one-time allowance.

Therefore, the proposed change does not result in a significant reduction in a margin of safety.

Based on the above, NSPM concludes that the proposed amendment does not involve a significant hazards consideration under the standards set forth in 10 CFR 50.92(c), and accordingly, a finding of “no significant hazards consideration” is justified.

4.3 Conclusions

In conclusion, based on the considerations discussed above, (1) there is reasonable assurance that the health and safety of the public will not be endangered by operation in the proposed manner, (2) such activities will be conducted in compliance with the Commission’s regulations, and (3) the issuance of the amendment will not be inimical to the common defense and security or to the health and safety of the public.

5.0 ENVIRONMENTAL CONSIDERATION

NSPM has determined that the proposed amendment would change a requirement with respect to installation or use of a facility component located within the restricted area, as

defined in 10 CFR 20, or would change an inspection or surveillance requirement. However, the proposed amendment does not involve (I) a significant hazards consideration, (ii) a significant change in the types or significant increase in the amounts of any effluent that may be released offsite, or (iii) a significant increase in individual or cumulative occupational radiation exposure. Accordingly, the proposed amendment meets the eligibility criterion for categorical exclusion set forth in 10 CFR 51.22(c)(9). Therefore, pursuant to 10 CFR 51.22(b), no environmental impact statement or environmental assessment need be prepared in connection with the proposed amendment.

6.0 REFERENCES

1. NRC Letter to NSPM, “Prairie Island Nuclear Generating Plant, Units 1 and 2 – Issuance of Amendment Nos. 237 and 225 re: Inoperable Cooling Water System Supply Header (EPID L-2021-LLA-0187),” dated November 23, 2021. (NRC ADAMS Accession No. ML21312A021)

2. NRC Generic Letter 80-30, “Clarification of the Term ‘Operable’ as it Applies to Single Failure Criterion for Safety Systems Required by TS,” dated April 10, 1989.

ENCLOSURE, ATTACHMENT 1

PRAIRIE ISLAND NUCLEAR GENERATING PLANT, UNITS 1 AND 2

License Amendment Request to Revise Technical Specification 3.7.8 Required Actions

TECHNICAL SPECIFICATION PAGES (Markup)

(2 pages follow)

ACTIONS ~~(continued)~~

CONDITION	REQUIRED ACTION	COMPLETION TIME
A. (continued)	A.1 Restore one safeguards CL pump to OPERABLE status.	7 days OR In accordance with the Risk Informed Completion Time Program
B. One CL supply header inoperable.	----------NOTES---------- 1. Unit 1 enter applicable Conditions and Required Actions of LCO 3.8.1, "AC Sources-MODES 1, 2, 3, and 4," for emergency diesel generator made inoperable by CL System. 2. Both units enter applicable Conditions and Required Actions of LCO 3.4.6, "RCS Loops-MODE 4," for residual heat removal loops made inoperable by CL System. ---------- B.1 ~~Verify vertical motor driven CL pump OPERABLE.~~ ~~AND~~	4 hours~~*~~

----------NOTE----------
Opposite train diesel driven CL pump may be verified to be OPERABLE by administrative means.

Verify opposite train CL pump OPERABLE.

~~* As a contingency and if needed to support an adequate isolation boundary, the vertical motor driven CL pump is allowed to remain inoperable for up to 36 hours to support blind flange installation and for up to 36 hours to support the blind flange removal during the time frame of 11/28/2021 through 12/28/2021 to Support the A and B train CL Supply Header piping replacement project.~~

ACTIONS ~~(continued)~~

CONDITION	REQUIRED ACTION	COMPLETION TIME
B. (continued)	~~B.2~~ ~~Verify opposite train diesel driven CL pump OPERABLE.~~ AND ~~B.3~~ B.2 Restore CL supply header to OPERABLE status.	~~4 hours~~ 72 hours OR In accordance with the Risk Informed Completion Time Program
C. Required Action and associated Completion Time not met.	C.1 Be in MODE 3. AND C.2 Be in MODE 5.	6 hours 36 hours
D. ----------NOTE---------- Separate Condition entry is allowed for each stored diesel driven CL pump fuel oil supply. ---------- One or both stored diesel driven CL pump fuel oil supply(s) < 7 days and ≥ 6 days.	D.1 Restore fuel oil supply to ≥ 7 days.	48 hours

ENCLOSURE, ATTACHMENT 2

PRAIRIE ISLAND NUCLEAR GENERATING PLANT, UNITS 1 AND 2

License Amendment Request to Revise Technical Specification 3.7.8 Required Actions

TECHNICAL SPECIFICATION PAGES (Re-typed)

(3 pages follow)

ACTIONS

CONDITION	REQUIRED ACTION	COMPLETION TIME
A. (continued)	A.1 Restore one safeguards CL pump to OPERABLE status.	7 days <u>OR</u> In accordance with the Risk Informed Completion Time Program
B. One CL supply header inoperable.	----------NOTES---------- 1. Unit 1 enter applicable Conditions and Required Actions of LCO 3.8.1, "AC Sources-MODES 1, 2, 3, and 4," for emergency diesel generator made inoperable by CL System. 2. Both units enter applicable Conditions and Required Actions of LCO 3.4.6, "RCS Loops-MODE 4," for residual heat removal loops made inoperable by CL System. ----------	

ACTIONS

CONDITION	REQUIRED ACTION	COMPLETION TIME
B. (continued)	B.1 ----------NOTE---------- Opposite train diesel driven CL pump may be verified to be OPERABLE by administrative means. ----------	
	Verify opposite train CL pump OPERABLE.	4 hours
	AND	
	B.2 Restore CL supply header to OPERABLE status.	72 hours OR In accordance with the Risk Informed Completion Time Program
C. Required Action and associated Completion Time not met.	C.1 Be in MODE 3.	6 hours
	AND	
	C.2 Be in MODE 5.	36 hours

ACTIONS (continued)

CONDITION	REQUIRED ACTION	COMPLETION TIME
D. ----------NOTE---------- Separate Condition entry is allowed for each stored diesel driven CL pump fuel oil supply. ---------- One or both stored diesel driven CL pump fuel oil supply(s) < 7 days and ≥ 6 days.	D.1 Restore fuel oil supply to ≥ 7 days.	48 hours
E. ----------NOTE---------- Separate Condition entry is allowed for each stored diesel driven CL pump fuel oil supply. ---------- One or both stored diesel driven CL pump fuel oil supply(s) < 6 days. OR Required Action and associated Completion Time of Condition D not met.	E.1 Declare associated diesel driven CL pump inoperable.	Immediately

ENCLOSURE, ATTACHMENT 3

PRAIRIE ISLAND NUCLEAR GENERATING PLANT, UNITS 1 AND 2

License Amendment Request to Revise Technical Specification 3.7.8 Required Actions

TECHNICAL SPECIFICATION BASES PAGES (Marked-Up)
(Provided for Information Only)

(5 pages follow)

BASES (continued)

LCO

Two CL trains are required to be OPERABLE to provide the required redundancy to ensure that the system functions to remove post accident heat loads, assuming that the worst case single active failure occurs coincident with the loss of offsite power.

A CL train is considered OPERABLE when:

a. The safeguards CL pump, aligned to the train, is OPERABLE;

b. The associated header is OPERABLE; and

c. The associated piping, valves, and instrumentation and controls required to perform the safety related function are OPERABLE.

A diesel driven safeguards CL pump is considered OPERABLE when:

a. The associated piping, valves, auxiliaries, and instrumentation and controls required to perform the safety related function are OPERABLE; and

b. There is a 7 day stored diesel driven CL pump fuel oil supply available in that train's tanks. The fuel oil supply equivalent to 7 days is 10,825 gallons.

The 121 CL pump starts during low header pressure conditions and it functions as a backup source replacing a diesel driven safeguards CL pump. In this latter case, additional requirements for OPERABILITY are specified.

~~121 CL pump is considered OPERABLE when:~~

~~a. The associated piping, valves, and instrumentation and controls required to perform the safety related function are OPERABLE.~~

LCO
(continued)

121 CL pump is considered OPERABLE as the safeguards substitute for 12 diesel driven CL pump when:

a. The associated piping, valves, and instrumentation and controls required to perform the safety related function are OPERABLE;

b. MV-32037 or MV-32036 are closed and the associated breaker is locked in the OFF position;

c. MV-32034 and MV-32035 are open and both breakers are locked in the OFF position; and

d. Bus 27 is supplied from Bus 25.

121 CL pump is considered OPERABLE as the safeguards substitute for 22 diesel driven CL pump when:

a. The associated piping, valves, and instrumentation and controls required to perform the safety related function are OPERABLE;

b. MV-32034 or MV-32035 are closed and the associated breaker is locked in the OFF position;

c. MV-32036 and MV-32037 are open and both breakers are locked in the OFF position; and

d. Bus 27 is supplied from Bus 26.

BASES

ACTIONS (continued)

B.1 and B.2

~~B.1, B.2 and B.3~~

is

or

If one CL supply header is inoperable, action must be taken to verify the vertical motor driven CL pump ~~and~~ the opposite train diesel driven CL pump ~~are~~ OPERABLE within 4 hours, and restore the inoperable CL header to OPERABLE status within 72 hours.

requires that the pump is OPERABLE as the safeguards substitute for the opposite train diesel driven CL pump as described in the LCO discussion, above.

Verification of vertical motor driven CL pump OPERABILITY ~~does not require the pump to be aligned and may be performed by administrative means~~. Verification of the opposite train diesel driven CL pump may be performed by administrative means. Completion of the CL pump surveillance tests is not required.

Conditions may occur in the CL System piping, valves, or instrumentation downstream of the supply header (e.g., closed or failed valves, failed piping, or instrumentation in a return header) that can result in the supply header being considered inoperable. In such cases, Condition B and related Required Actions shall apply.

In this Condition, the remaining OPERABLE CL header is adequate to perform the heat removal function. However, the overall redundancy is reduced because only a single CL train remains OPERABLE.

Required Action B.1 ensures that there is an OPERABLE

~~Required Action B.1 ensures that the vertical motor driven 121 CL pump may be used to provide redundancy for the~~ safeguards CL pump on the OPERABLE header. Required Action ~~B.3~~ assures adequate system reliability is maintained.

B.2

B.1 and B.2

Required Actions ~~B.1, B.2, and B.3~~ are modified by two Notes.

The first Note indicates that the applicable Conditions and Required Actions of LCO 3.8.1, "AC Sources-Operating," should be entered for Unit 1 since an inoperable CL train results in an inoperable emergency diesel generator.

B.1 and B.2

BASES

ACTIONS

~~B.1, B.2 and B.3~~ (continued)

Required Action B.1 is modified by a Note that indicates that the opposite train diesel driven CL pump may be verified operable by administrative means.

The second Note indicates that the applicable Conditions and Required Actions of LCO 3.4.6, "RCS Loops-MODE 4," should be entered if an inoperable CL train results in an inoperable decay heat removal train. This is an exception to LCO 3.0.6 and ensures the proper actions are taken for these components.

(one CL header supported by at least one safeguards CL pump)

The 4 and 72 hour Completion Times are based on the redundant capabilities afforded by the OPERABLE train, and the low probability of a DBA occurring during this time period. In addition, the 4 hour Completion Time for Required Action~~s~~ B.1 ~~and B.2~~ is within the time period anticipated to verify OPERABILITY of the required CL pump ~~by administrative means~~.

~~An extended Completion Time is provided on a one-time basis for Required Action B.1 if it is needed. The extended Completion Time is 36 hours and supports installation and removal of a blind flange (36 hours for each evolution) if it becomes necessary to install a blind flange in support of creating an adequate isolation for CL supply header replacement work during the time frame of 11/28/2021 to 12/28/2021.~~

C.1 and C.2

If at least one safeguards CL pump for a train or a CL supply header cannot be restored to OPERABLE status within the associated Completion Time, the units must be placed in a MODE in which the LCO does not apply. To achieve this status the units must be placed in at least MODE 3 within 6 hours and in MODE 5 within 36 hours.

The allowed Completion Times are reasonable, based on operating experience, to reach the required unit conditions from full power conditions in an orderly manner and without challenging unit systems.

ACTIONS (continued)

D.1

This Condition is modified by a note indicating that separate Condition entry is allowed for each stored diesel driven CL pump fuel oil supply. This is acceptable, since the Required Actions for each Condition provide appropriate compensatory actions for each inoperable stored diesel driven CL pump fuel oil supply. Complying with the Required Actions for one inoperable stored diesel driven CL pump fuel oil supply may allow for continued operation, and subsequent inoperable stored diesel driven CL pump fuel oil supply is governed by separate Condition entry and application of associated Required Actions.

In this Condition, the 7 day stored diesel driven CL pump fuel oil supply is not available. However, the Condition is restricted to fuel oil supply reductions that maintain at least a 6 day supply. The fuel oil supply equivalent to a 6 day supply is 9,297 gallons. This restriction allows sufficient time for obtaining the requisite replacement volume and performing the analyses required prior to addition of fuel oil to the tank(s). A period of 48 hours is considered sufficient to complete restoration of the required supply prior to declaring the diesel driven CL pumps inoperable. This period is acceptable based on the remaining 6 day fuel oil supply, the fact that procedures will be initiated to obtain replenishment, availability of the vertical motor driven CL pump and the low probability of an event during this brief period.

E.1

This Condition is modified by a note indicating that separate Condition entry is allowed for each stored diesel driven CL pump fuel oil supply. This is acceptable, since the Required Actions for each Condition provide appropriate compensatory actions for each inoperable stored diesel driven CL pump fuel oil supply. Complying with the Required Actions for one inoperable stored diesel driven CL pump fuel oil supply may allow for continued operation, and subsequent inoperable stored diesel driven CL pump fuel oil supply is governed by separate Condition entry and application of associated Required Actions.