8031-M-54 SH. 2 OF 2

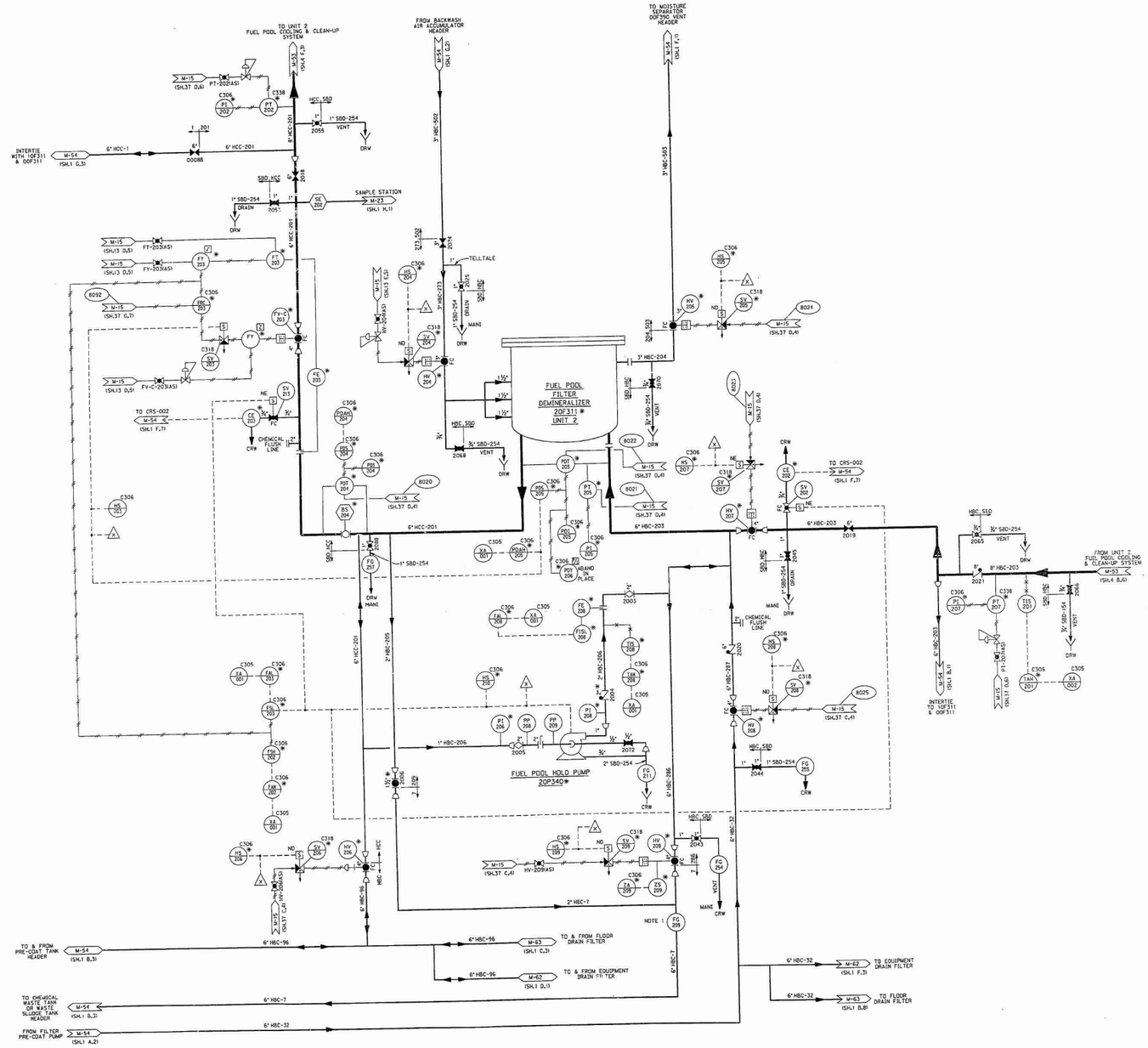

NOTES:

1. THESE INSTRUMENTS ARE NOT A.S.M.E SECTION III DEVICES.
2. DELETED.
3. DESIGN, FABRICATION, MATERIAL PROCUREMENT, ERECTION AND TESTING FOR ALL PIPING AND VALVES SHOWN ON THIS P&ID MAY BE IN ACCORDANCE WITH THE REQUIREMENTS OF THE PIPING CLASS DESIGNATION, DESIGN CODE "D", WITH THE FOLLOWING EXCEPTIONS:
   (a) CLEANING REQUIREMENTS SHALL BE PER THE ORIGINAL LINE CLASS DESIGNATION.
   (b) WELDING PROCEDURES TO BE USED SHALL BE AS REQUIRED PER THE ORIGINAL LINE CLASS DESIGNATION.
4. DEVICES SHOWN MOUNTED ON PANEL C306 ARE LOCATED IN PANEL 00C306 WHICH IS COMMON TO ALL THREE FILTER/DEMINERALIZERS.
5. DELETED.
6. DELETED.
7. VALVE HAS CHAIN OPERATOR.
8. DELETED.
9. DELETED.
10. DELETED.

NO	DATE	DESCRIPTION	REVD	CKD	APPD
7		INCORP. ECR LG-94-0680 REV 1, DELETED RECORDER PDR-054-005.	D.G.	R.G.	J.A.

TABLE OF ADDITIONS & CHANGES
USE ONLY PRINTS SHOWING LATEST DATE

MECHANICAL

P&ID
FUEL POOL FILTER/DEMINERALIZER
(UNIT 2)

LIMERICK GENERATING STATION
PECO ENERGY CO.

SCALE	DRAWN	ICDS	CHECKED	INSPECTED	APPROVED	DATE
NONE	BECHTEL	BECHTEL	BECHTEL	BECHTEL	BECH	03/21/89

APPROVED BECHTEL APPROVED

SHEET 2 OF 8031-M-54 7

CATEGORY A1

M-54 (SHT. 02)

Layout of 1-53,54,55,56-52