SCALING RULES

SIZE E

8031-M-78FD SHT 4 OF 8

NOTES:

1. THIS FUNCTIONAL DESCRIPTION DRAWING IS BASED ON P & ID M-78, SHT. 3 REV.9.

REF H (78-8)

CONTROL ENCLOSURE BATTERY ROOM ISOLATION DAMPERS

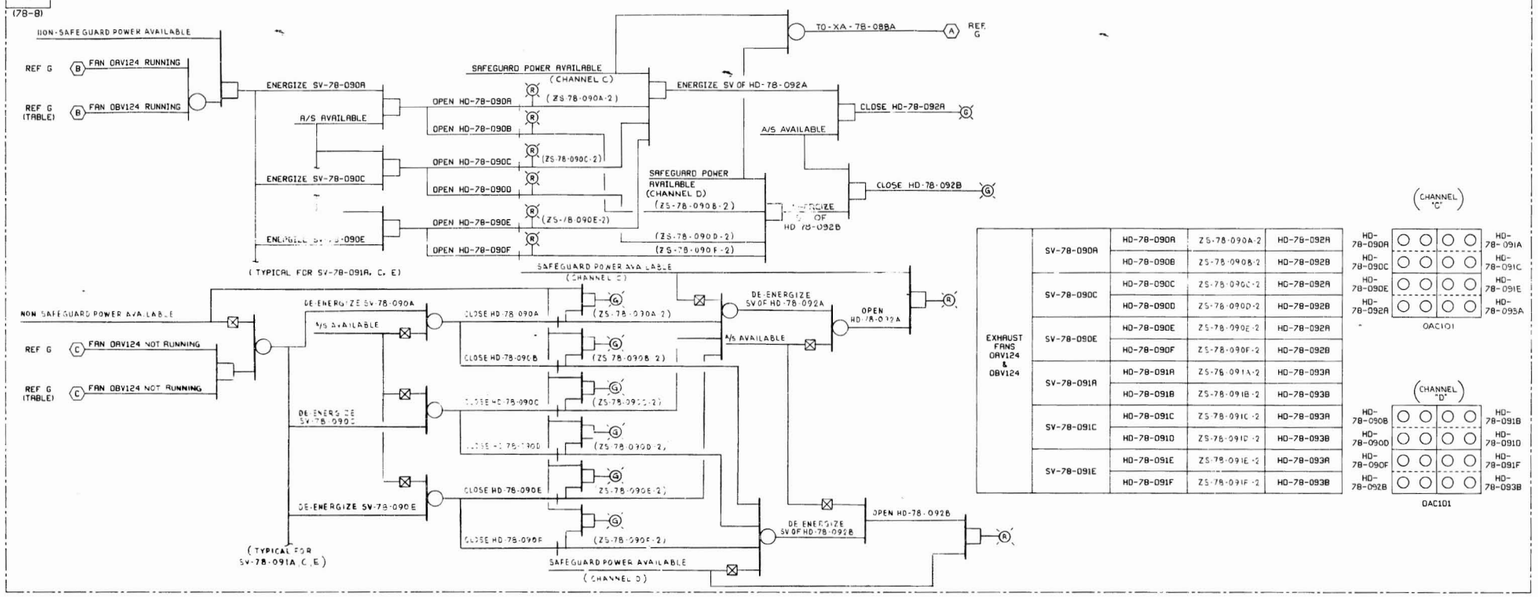

EXHAUST FANS DRV124 & DBV124					
	SV-78-090A	HD-78-090A	ZS-78-090A-2	HD-78-092A	
		HD-78-090B	ZS-78-090B-2	HD-78-092B	
	SV-78-090C	HD-78-090C	ZS-78-090C-2	HD-78-092A	
		HD-78-090D	ZS-78-090D-2	HD-78-092B	
	SV-78-090E	HD-78-090E	ZS-78-090E-2	HD-78-092A	
		HD-78-090F	ZS-78-090F-2	HD-78-092B	
	SV-78-091A	HD-78-091A	ZS-78-091A-2	HD-78-093A	
		HD-78-091B	ZS-78-091B-2	HD-78-093B	
	SV-78-091C	HD-78-091C	ZS-78-091C-2	HD-78-093A	
		HD-78-091D	ZS-78-091D-2	HD-78-093B	
	SV-78-091E	HD-78-091E	ZS-78-091E-2	HD-78-093A	
		HD-78-091F	ZS-78-091F-2	HD-78-093B	

REF J (78-9)

CONTROL ENCLOSURE EMERGENCY SWITCHGEAR AND BATTERY ROOMS SUPPLY FANS DRV118 & DBV118

Notes
A. TURN HS TO "OFF" TO REMOVE SEAL-IN.

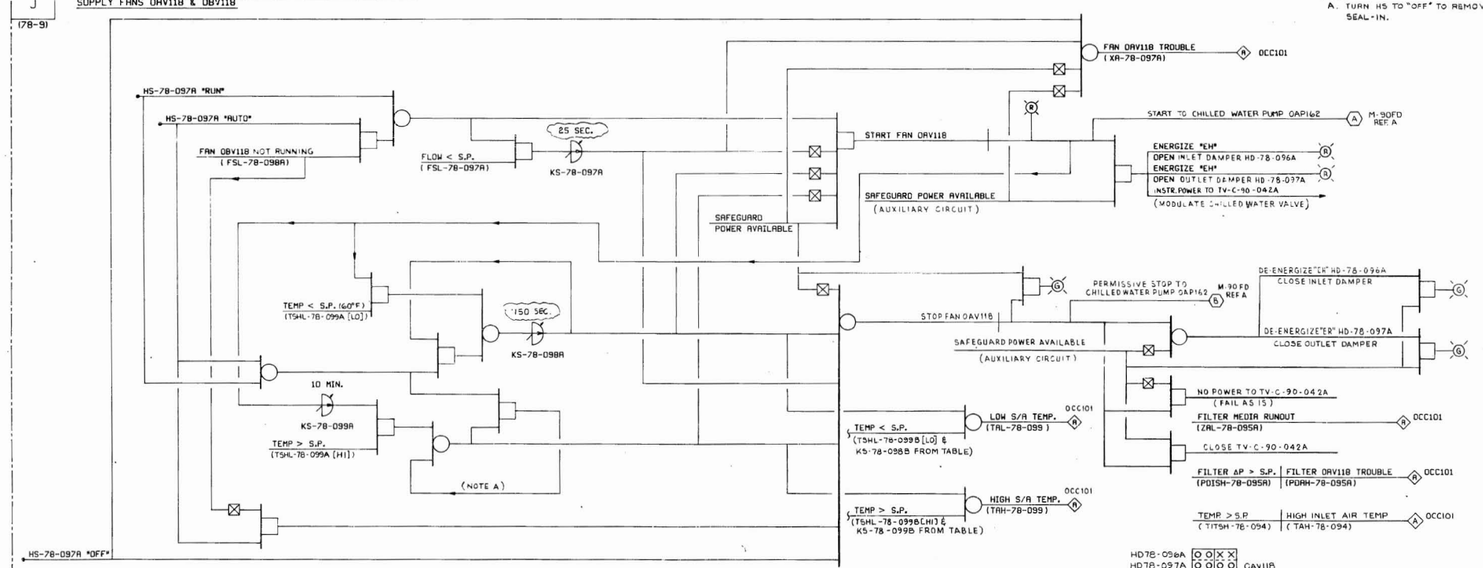

FAN	ZAL-	PDAH-	PDISH-	HD-	FSL-	HD-	HS-	KS-	XA-	FSL-	KS-		KS-	TSHL- HI	TSHL- LO	PUMP	PANEL
DRV118	78-095A			78-096A	78-097A					78-098A			78-099A			DAP162	OAC101
DBV118	78-095B			78-096B	78-097B					78-098B			78-099B			DBP162	OBC101

REFERENCE SCHEMATIC DRAWINGS

REF NO.	DWG NO	TITLE
H	E522	CONTROL ENCLOSURE BATTERY ROOM EXHAUST & RECIRCULATION DAMPERS - COMMON
J	E521	CONTROL ENCLOSURE EMERGENCY SWITCHGEAR & BATTERY ROOMS SUPPLY AIR FANS & DAMPERS - COMMON

NO.	DATE	REVISIONS	BY	CHKD	DESIGN ENGR	CHIEF ENGR	APPR
5	8/6/84	REVISED TO INCORP. DCN NO. 08	DRL				
4	5/15/84	REVISED FOR CONSTRUCTION					
3	5/11/84	REISSUED FOR CONSTRUCTION					
2	8/10/83	REISSUED FOR CONSTRUCTION					
1	7/8/83	REISSUED FOR CONSTRUCTION					
0	4/8/83	ISSUED FOR CONSTRUCTION					
A	3/1/83	ISSUED FOR APPROVAL					

SCALE NONE DESIGNER DRAWN COMPUTER

BECHTEL
SAN FRANCISCO

LIMERICK GENERATING STATION UNITS 1 & 2
PHILADELPHIA ELECTRIC COMPANY

FUNCTIONAL DESCRIPTION
CONTROL ENCLOSURE - HVAC

JOB No.	DRAWING No.	REV.
8031	M-78FD SHT 4 OF 8	5

REF. H, J

8 7 6 5 4 3 2 1

34 x 44 "E" SIZE

30X
I certify that the microfilmed image contained on this microform were made in the normal and regular course of business. This is a true, full, correct and complete reproduction and replacement for and/or in lieu of original documents generated by the Bechtel group of companies.
Signature R. Harris Date 7-11-84 Camera Type ARG2