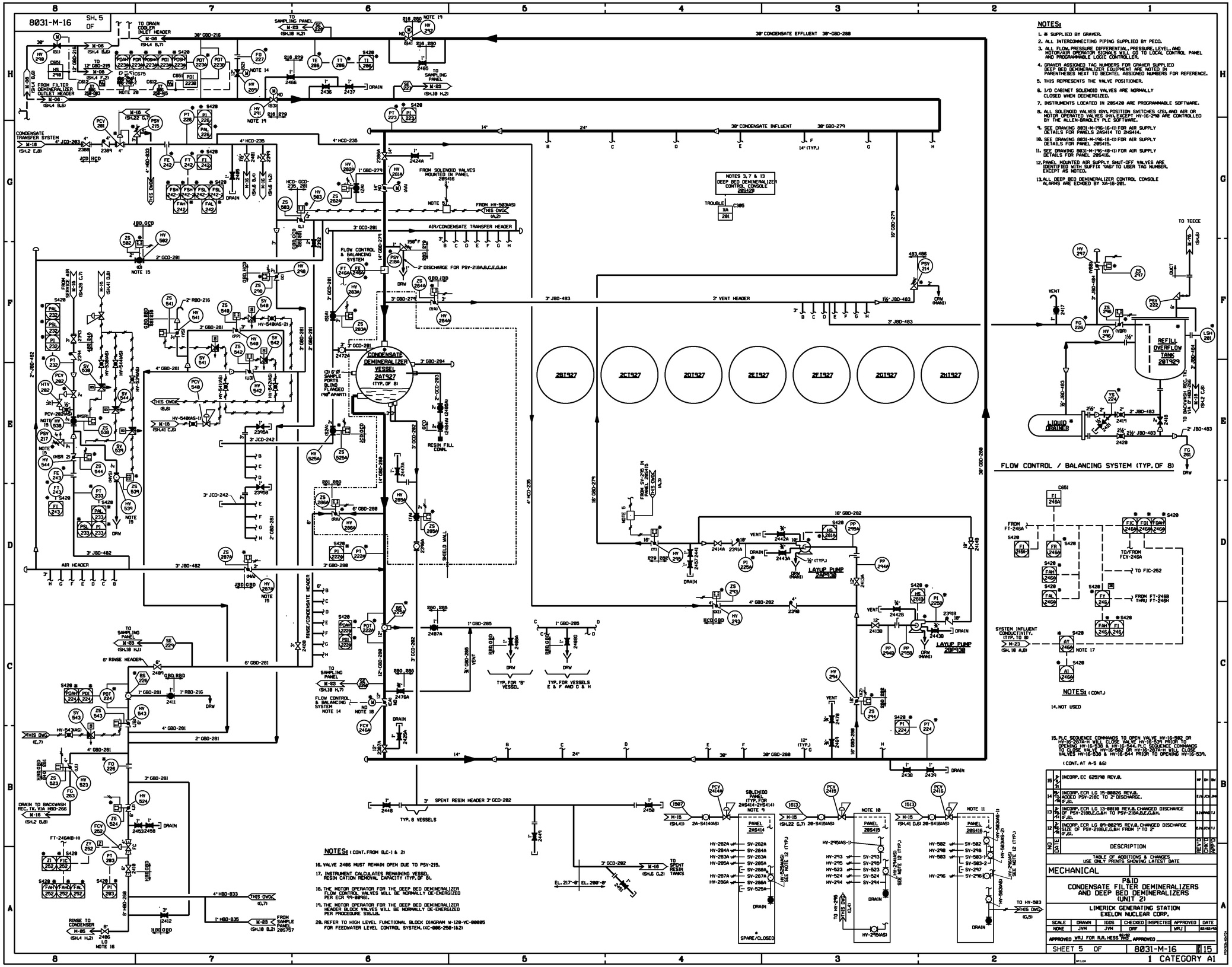

NOTES:

1. ⊛ SUPPLIED BY GRAVER.
2. ALL INTERCONNECTING PIPING SUPPLIED BY PECO.
3. ALL FLOW, PRESSURE DIFFERENTIAL, PRESSURE, LEVEL, AND MOTOR/AIR OPERATOR SIGNALS WILL GO TO LOCAL CONTROL PANEL AND PROGRAMMABLE LOGIC CONTROLLER.
4. GRAVER ASSIGNED TAG NUMBERS FOR GRAVER SUPPLIED DEEP BED DEMINERALIZER EQUIPMENT ARE NOTED IN PARENTHESES NEXT TO BECHTEL ASSIGNED NUMBERS FOR REFERENCE.
5. THIS REPRESENTS THE VALVE POSITIONER.
6. I/O CABINET SOLENOID VALVES ARE NORMALLY CLOSED WHEN DEENERGIZED.
7. INSTRUMENTS LOCATED IN 2DS429 ARE PROGRAMMABLE SOFTWARE.
8. ALL SOLENOID VALVES (SY), POSITION SWITCHES (ZS), AND AIR OR MOTOR OPERATED VALVES (HV), EXCEPT HV-16-298 ARE CONTROLLED BY THE ALLEN-BRADLEY PLC SOFTWARE.
9. SEE DRAWING 8031-M-196-16-(1) FOR AIR SUPPLY DETAILS FOR PANELS 2AS414 TO 2HS414.
10. SEE DRAWING 8031-M-196-18-(1) FOR AIR SUPPLY DETAILS FOR PANEL 2DS416.
11. SEE DRAWING 8031-M-196-48-(1) FOR AIR SUPPLY DETAILS FOR PANEL 2DS415.
12. PANEL MOUNTED AIR SUPPLY SHUT-OFF VALVES ARE IDENTIFIED WITH SUFFIX "AS" TO USER TAG NUMBER, EXCEPT AS NOTED.
13. ALL DEEP BED DEMINERALIZER CONTROL CONSOLE ALARMS ARE ECHOED BY XA-16-281.

NOTES: (CONT.)

14. NOT USED
15. PLC SEQUENCE COMMANDS TO OPEN VALVE HV-16-582 OR HV-16-287A-H WILL CLOSE VALVE HV-16-539 PRIOR TO OPENING HV-16-538 & HV-16-544. PLC SEQUENCE COMMANDS TO CLOSE VALVE HV-16-582 OR HV-16-287A-H WILL CLOSE VALVES HV-16-538 & HV-16-544 PRIOR TO OPENING HV-16-539.

(CONT. AT A-5 &6)

NOTES: (CONT. FROM B,C-1 & 2)

16. VALVE 2486 MUST REMAIN OPEN DUE TO PSV-215.
17. INSTRUMENT CALCULATES REMAINING VESSEL RESIN CATION REMOVAL CAPACITY (TYP. OF 8).
18. THE MOTOR OPERATOR FOR THE DEEP BED DEMINERALIZER FLOW CONTROL VALVES WILL BE NORMALLY DE-ENERGIZED PER ECR 99-00761.
19. THE MOTOR OPERATOR FOR THE DEEP BED DEMINERALIZER HEADER BLOCK VALVES WILL BE NORMALLY DE-ENERGIZED PER PROCEDURE S6L1.8.
20. REFER TO HIGH LEVEL FUNCTIONAL BLOCK DIAGRAM M-128-VC-00085 FOR FEEDWATER LEVEL CONTROL SYSTEM. (XC-006-250-1&2)

NO	DATE	DESCRIPTION	REV'D BY	CHK'D BY	APP'D BY
15	9/96	INCORP. EC 625190 REV.0.			
14	9/96	INCORP. ECR LG 15-00826 REV.0. ADDED PSV-218C TO 2" DISCHARGE. (F,8).	EJH	JCH	JMK
13	2/96	INCORP. ECR LG 13-00118 REV.0. CHANGED DISCHARGE OF PSV-218B,E,G,&H TO PSV-218A,B,E,G,&H. (F,8).	EJH	JMK	TJ
12	12/95	INCORP. ECR LG 89-00296 REV.0. CHANGED DISCHARGE SIZE OF PSV-218B,E,G,&H FROM 1" TO 2" (F,8).	EJH	JCH	TJ

TABLE OF ADDITIONS & CHANGES
USE ONLY PRINTS SHOWING LATEST DATE

MECHANICAL

P&ID
CONDENSATE FILTER DEMINERALIZERS
AND DEEP BED DEMINERALIZERS
(UNIT 2)

LIMERICK GENERATING STATION
EXELON NUCLEAR CORP.

SCALE	DRAWN	RDDS	CHECKED	INSPECTED	APPROVED	DATE
NONE	JVM	DRF	WRJ			05/29/96

APPROVED WRJ FOR R.J. HESS 9/96 APPROVED

SHEET 5 OF 8031-M-16 15

1 CATEGORY A1