TABLE OF CONTENTS

CHAPTER 8 ELECTRIC POWER

8.1 INTRODUCTION 8.1-1
8.1.1 Utility Grid Description 8.1-1
8.1.2 Onsite Electric Systems 8.1-1
8.1.3 Safety Loads 8.1-2
8.1.3.1 Division of Safety Loads 8.1-4
8.1.3.2 Reactor Protection System Power System Loads 8.1-4
8.1.3.3 HPCS Power System Loads 8.1-4
8.1.4 Design Bases 8.1-5
8.1.4.1 Safety Design Bases - Offsite Power 8.1.5
8.1.4.2 Safety Design Bases - Onsite Power 8.1.6
8.1.4.3 Power Generation Design Bases 8.1-8
8.1.4.4 Design Criteria, Regulatory Guides, and IEEE Standards 8.1-9

8.2 OFFSITE POWER SYSTEM..... 8.2-1
8.2.1 Description 8.2-1
8.2.1.1 Transmission System 8.2-1
8.2.1.2 Switchyard 8.2-4
8.2.1.3 Offsite Power System Monitoring and Surveillance 8.2-10
8.2.1.4 Standards and Guides 8.2-11
8.2.2 Analysis 8.2-12
8.2.2.1 Availability Considerations 8.2-12
8.2.3 Stability 8.2-14
8.2.4 Operating Limits 8.2-14
8.2.5 References 8.2-17

8.3 ONSITE POWER SYSTEMS..... 8.3-1
8.3.1 AC Power Systems 8.3-1
8.3.1.1 Description 8.3-1
8.3.1.2 Analysis 8.3-41
8.3.1.3 Physical Identification of Safety-Related Equipment 8.3-70

TABLE OF CONTENTS

8.3.1.4 Independence of Redundant Systems Through Physical Arrangement 8.3-71
8.3.2 DC Power Systems 8.3-76
8.3.2.1 Description 8.3-76
8.3.2.2 Analysis 8.3-84
8.3.3 Fire Protection of Cable Systems 8.3-86
8.3.3.1 Fire Prevention 8.3-86
8.3.3.2 Fire Detection/Suppression 8.3-87
8.3.3.3 Mitigation of Consequences 8.3-87

APPENDIX 8A LOSS OF ALL ALTERNATING CURRENT POWER (STATION BLACKOUT) 8A-1

8A.1 Station Blackout Duration 8A-1
8A.2 Station Blackout Coping Capability 8A-2
8A.3 Condensate Inventory For Decay Heat Removal 8A-2
8A.4 Class 1E Battery Capacity 8A-2
8A.5 Compressed Air 8A-2
8A.6 Effects of Loss of Ventilation 8A-3
8A.6.1 Control Room and Upper Cable Spreading Room 8A-3
8A.6.2 HPCS Pump Room 8A-3
8A.6.3 RCIC Room 8A-3
8A.6.4 Steam Tunnel 8A-3
8A.6.5 Switchgear/Inverter Room 8A-4
8A.6.6 Drywell 8A-4
8A.7 Containment Isolation 8A-4
8A.8 Reactor Coolant Inventory 8A-6
8A.9 Procedures 8A-6
8A.10 Quality Assurance 8A-6

TABLE OF CONTENTS

8A.11 Emergency Diesel Generator Reliability Program .. 8A-7

8A.12 Spent Fuel Pool 8A-7

LIST OF TABLES

Table 8.1-1 Identification of Safety-Related Criteria (10 Sheets)
Table 8.2-1 Deleted
Table 8.2-1a Deleted
Table 8.2-2 Switchyard Alarms and Annunciation (6 Sheets)
Table 8.2-3 Grand Gulf Load Flow Studies (2 Sheets)
Table 8.2-4 Deleted
Table 8.3-1 Deleted
Table 8.3-2 Deleted
Table 8.3-3 Deleted
Table 8.3-4 Automatic and Manual Loading and Unloading of Engineered Safety Features Bus (9 Sheets)
Table 8.3-5 Deleted
Table 8.3-6 125 V DC Battery A (DIV 1) (2 Sheets)
Table 8.3-7 125 V DC Battery B (DIV 1)
Table 8.3-8 125 V DC Bus (HPCS) (Div 3)
Table 8.3-9 Load Shedding and Sequencing System LSS (7 sheets)
Table 8.3-10 Non-Class 1E Loads Fed from Division 1 Buses (3 Sheets)
Table 8.3-11 Non-Class 1E Loads Fed from Division 2 Buses (4 Sheets)
Table 8.3-12 Non-Class IE Loads Fed from DC System Buses (2 Sheets)
Table 8.3-13 Separation Criteria Allowable Versus Tested (2 Sheets)

LIST OF FIGURES

Figure 8.1-1 Main One Line Diagram
Figure 8.2-1 Transmission System Map - Entergy Electrical System
Figure 8.2-2 Entergy Mississippi, Inc. System Map
Figure 8.2-3 Power Supply Routing - Plant to Switchyard & Radial Well Switchgear House
Figure 8.2-4 Switchyard Service Power Sys. A.C. One Line 500 & 34 kV Switchyard
Figure 8.2-5 34.5 kV Cable Layout to ESF XFMRS & 4.16 kV Cable Layout to ESF Swgr. Units 1 & 2
Figure 8.2-6 Offsite Power Source Control Power
Figure 8.3-1 One Line Meter and Relay Diagram 4.16 kV ESF System Buses 15AA and 16AB, Unit 1
Figure 8.3-2 Deleted
Figure 8.3-3 Deleted
Figure 8.3-4 Deleted
Figure 8.3-5 Deleted
Figure 8.3-6 Deleted
Figure 8.3-7 One Line Meter and Relay Diagram 120/240V AC Uninterruptible Power Supplies Unit 1
Figure 8.3-7a One Line Meter and Relay Diagram 120/240V AC Uninterruptible Power Supplies
Figure 8.3-7b One Line Meter and Relay Diagram 120 V AC ESF Uninterruptible Power Supplies Unit 1
Figure 8.3-7C One Line Meter and Relay Diagram 120/240V AC Uninterruptible Power Supplies Unit 1
Figure 8.3-8 Diesel Logic Diagram ESF Div. 1 Unit 1
Figure 8.3-8a Diesel Logic Diagram ESF Div. 11 Unit 1
Figure 8.3-9 Logic Diagram Load Shedding and Sequencing Panel Unit 1
Figure 8.3-10 One Line Meter and Relay Diagram 125V DC Buses 11DA, 11DB and 11DC Unit 1
Figure 8.3-10A One Line Meter and Relay Diagram 125V DC Buses 11 DK, 11 DL, and 250V DC Bus 11 DF Unit 1
Figure 8.3-10B One Line Meter and Relay Diagram 125V DC

LIST OF FIGURES

	Buses 11DD, 11DE Unit 1
Figure 8.3-11	Deleted
Figure 8.3-12a	Division 3 HPCS Power System
Figure 8.3-12b	Division 3 HPCS Power System
Figure 8.3-13	HPCS Division 3 ESF-DC System
Figure 8.3-14	Schematic Diagram C71 RPS MG Set Control System

CHAPTER 8.0 ELECTRIC POWER

8.1 INTRODUCTION

8.1.1 Utility Grid Description

The Entergy Mississippi, Inc./Entergy System grid system consists of interconnected hydro-plants, fossil fuel plants, and nuclear plants supplying electric energy over a 500/230/115 kV transmission system as shown in Figures 8.2-1 and 8.2-2.

Entergy Mississippi, Inc. is a member of Entergy Electric System. Other members are Entergy Arkansas, Inc., Entergy Louisiana, Inc., System Energy Resources, Inc. (SERI), New Orleans Public Services, Inc. (NOPSI), and Entergy Gulf States.

The Entergy Electric System is interconnected with the Southwestern Power Administration (SPA), Associated Electric Cooperatives, Inc. (AECI), Missouri Utilities (MU), Union Electric Company (UE), Tennessee Valley Authority (TVA), Mississippi Power Company (MPC), Central Louisiana Electric Company (CLECO), Southwestern Electric Power Company (SWEP), Oklahoma Gas and Electric Company (OG&E), Empire District Electric Company (EDE), and Arkansas Electric Cooperative Corporation (AECC).

8.1.2 Onsite Electric Systems

[HISTORICAL INFORMATION] [The station is supplied with ac power from the 500-kV switchyard and the 115-kV offsite circuit. From the switchyard, the voltage of the ac power is stepped down to 34.5 kV through two service transformers and fed to two sets of engineered safety features (ESF) and balance-of-plant transformers. The 115-kV offsite circuit feeds another ESF transformer with 4.16-kV output voltage. The ESF transformers supply the 4.16-kV ESF buses with ac power which feed ESF load groups at 4.16 and 0.48 kV. The balance- of-plant transformers provide ac power to balance-of-plant loads at 13.8, 6.9, 4.16, and 0.48 kV. An alternate source for the Class IE ac power system for each ESF bus is the associated diesel generator set.

The Class IE ac power system is divided into three independent divisions to provide ac power to the three divisions of ESF loads. The onsite ac power distribution system is shown on Figure 8.1-1.]

Each division of the Class IE ac power system is provided with an independent Class IE 125-volt dc system. The balance-of-plant loads have several 125-volt and 250-volt dc systems (see Figure 8.3-10).

Amendment 27 to the Facility Operating License for GGNS implemented transfer of control of licensed activities from MP&L, (since renamed Entergy Mississippi, Inc.) to SERI. At that time, as discussed in Section 8.2.1.2, MP&L and SERI entered into an agreement governing the conduct of activities involving interface between the two companies in the area of offsite power supply (Ref. 1). The division of ownership of the offsite power supply equipment occurs at the transformer bushings on the high voltage side of the two 500/34.5kV transformers. SERI owns the main unit output lines, through their main transformers (20.9/500kV); both 34.5kV substations and associated BOP and ESF transformers; and the 115/4.16kV ESF transformer, plus the cable and feeder breaker from the 115 kV substation. Entergy Mississippi, Inc. owns: the 115kV substation itself; and the 500kV lines downstream of the (20.9/500kV) main transformers. Maintenance activities and responsibilities for switchyard equipment are set forth in the MP&L/SERI agreement SERI maintains the main transformers, ESF and BOP Transformers. Entergy Mississippi, Inc. maintains other switchyard and transmission equipment.

8.1.3 Safety Loads

Safety loads are defined as those systems and devices that require electric power to perform their safety functions. Such loads are divided into the following classifications:

a. Engineered safety features (ESF)

   1. Emergency core cooling systems (ECCS)

      (a) Residual heat removal system (RHR) - low-pressure core injection (LPCI) mode

      (b) Low-pressure core spray system (LPCS)

      (c) High-pressure core spray system (HPCS)

      (d) Automatic depressurization system (ADS)

   2. Containment and reactor vessel isolation control system

3. Control room atmospheric control and isolation system

4. Standby service water system*

5. Combustible gas control system

6. Standby power and support systems*

7. Leakage control systems

   (a) Main steam isolation valve leakage control system (MSIV-LCS)

   (b) Feedwater isolation valve leakage control system (FIV-LCS)

8. Standby gas treatment system

9. Suppression pool makeup system

10. 10.RHR - Containment spray mode

11. 11.ESF area HVAC systems*

    (a) ECCS pump room HVAC

*Essential auxiliary supporting systems

    (b) Standby service water pumphouse HVAC

    (c) Emergency switchgear room HVAC

12. Auxiliary building isolation control system

b. Safe shutdown systems

1. Reactor protection system

2. Standby liquid control system

3. Control rod hydraulic system (scram system portion)

4. Nuclear steam supply shutoff system

5. Reactor core isolation cooling and room HVAC system

c. Spent fuel pool cooling system

All of the above loads utilize both ac and dc sources for motive or control power or both. In some cases the utilization is indirect. For example, dc control power in the logic provides an actuation signal to start the standby gas treatment system which is ac powered.

8.1.3.1 Division of Safety Loads

For detailed listings of safety division ac loads, see the site a/c electrical power and distribution calculations. Tables 8.3-6, 8.3-7, and 8.3-8 list the loads of Class IE 125-volt dc batteries.

Loads required for normal operation, normal shutdown, forced shutdown, and LOCA are documented in the site a/c electrical calculations.

Forced shutdown is defined as a shutdown following standard procedures but accomplished entirely with onsite power.

8.1.3.2 Reactor Protection System Power System Loads

Power supplies for the reactor protection system (RPS) have sufficient stored energy to remain available through switching transients. Power supplies are shown in Figure 8.3-14.

The safe failure characteristic of the RPS on a loss of power exempts the RPS power supplies from being classified essential. However, redundancy is provided to avoid an unnecessary plant shutdown on interruption of power to one RPS bus. The RPS

power system is grounded, which prevents unsafe failure that may occur from multiple grounds.

8.1.3.3 HPCS Power System Loads

The HPCS power system loads consist of the HPCS pump/motor and associated 460-volt ac auxiliaries, such as motor-operated valves, engine cooling water pump, and miscellaneous engine auxiliary loads. Table 8.3-8 lists the Division 3 loads of Class IE 125 V dc batteries. The applicable regulatory standards and guides implemented in the design of the controls are listed in Table 7.1-3.

8.1.4 Design Bases

8.1.4.1 Safety Design Bases - Offsite Power

a. Three offsite circuits from the Entergy Electric System provide the ac power requirements of the station.

b. Alternating current power from the 500 kV switchyard to the onsite electrical distribution is supplied by two physically independent circuits.

c. Each 500-34.5 kV service transformer has a rating capable of feeding the necessary power required for both BOP and safety loads of the unit.

d. The 500 kV switchyard is provided with two independent 125-volt dc systems and three auxiliary ac power supplies, one from Division 2 ESF 4.16 kV bus of Unit 1, one from 13.8 kV-480 V station service transformer, and one from ESF transformer No. 12.

e. Each 34.5-4.16 kV engineered safety feature transformer has a rating capable of supplying ac power to start and run ESF loads required due to a LOCA. The power comes from the 500-34.5 kV service transformers.

f. The 115-4.16 kV engineered safety features transformer has a single, independent offsite circuit. This transformer is capable of supplying ac power to start and run the ESF loads required as the result of a LOCA. Offsite grid analysis performed in 2000-2001 determined that the 115kV offsite circuit was not capable of supplying sufficient power to start and run the ESF loads required as the result of a LOCA. Transmission system upgrades, additional capacitor banks at the Port Gibson, South Vicksburg, and Fayette 115kV substations, were performed and the capability of the 115kV circuit has been restored.

g. Loss of Grand Gulf Nuclear Plant generating capability or its most critical offsite circuit will not cause system instability (see subsection 8.2.3).

8.1.4.2 Safety Design Bases - Onsite Power

8.1.4.2.1 Engineered Safeguard Features (ESF)

a. The safety-related load is divided into three division load groups. Each load group is fed by an independent Class IE electric system engineered safety features bus.

b. Three separate ac power feeds are provided for each engineered safety features bus, each of which origi- nates from an independent offsite source of power.

c. One diesel generator set and one independent 125-volt dc system are provided for each division load group.

d. An independent raceway system is provided to meet load group cable requirements for each ESF division.

8.1.4.2.2 Reactor Protection System (RPS)

The reactor protection system is a fail-safe system which requires no power in order to perform its safety function. However, it is afforded complete redundancy and separation to provide independence of its four sensor channels and four Class 1E uninterruptible power supplies.

8.1.4.2.3 High-Pressure Core Spray (HPCS) Power Supplies Design Basis

a. The HPCS power system loads consist of HPCS pump/motor and associated 460-volt ac auxiliaries such as motoroperated valves, engine cooling water pump, and miscellaneous engine auxiliary loads. Figures 8.3-12a and 8.3-12b show the basic one line diagram of the system.

b. The HPCS power system is self-contained except for access to the preferred source of offsite power, by connection through the plant ac power distribution system, and for the initiation signal source. It is an operable isolated system independent of electrical connection to any other system by use of the HPCS diesel-generator. Required standby auxiliary equipment such as heaters and battery charger are supplied from the same power source as the HPCS motor and are compatible with that available from the plant ac power system.

c. The HPCS diesel-generator has the capability to restore onsite power quickly to the HPCS pump motor in the event offsite power is unavailable and to provide all power for startup and operation of the HPCS pump motor compatible with safe shutdown of the plant. The HPCS diesel generator starts automatically on signal from the plant protection system or HPCS supply bus undervoltage and, when the plant preferred ac power supply is not available, is connected to the HPCS bus. A more detailed discussion is provided in subsection 8.3.1.1.4.2.1.

d. The HPCS electric system is capable of performing its function when subjected to the effects of design bases natural phenomena at its location. In particular, it is seismic Category I and it is housed in a seismic Category I structure.

e. The HPCS power system has its own fuel day tank and storage tank with sufficient capacity to operate the standby power source while supplying maximum post-accident HPCS power requirements for a time sufficient to put the plant in a safe condition. Tank size is consistent with availability of back-up fuel sources.

f. Manual controls are provided to permit the operator to select the most suitable distribution path from the power supply to the load. An automatic start signal overrides the test mode. Provision is made for diesel generator control from the control room or at the HPCS diesel generator control panel. The diesel generator can be controlled locally only when the "LOCAL/REMOTE" selector switch, located in the control room, is in the "LOCAL" position.

g. A separate dc power supply consisting of a battery and one battery charger exclusively provides the HPCS system dc power requirements for control and protection.

8.1.4.2.4 Reactor Protection System (RPS) Power System

a. The power for the reactor protection system is supplied by four Class 1E uninterruptible power supplies and two independent motor generator set sources, capable of sustaining output voltage and frequency where momentary loss of input power occurs due to switching.

b. Voltage regulation is provided so that the maximum voltage variation for a step loading of 50 percent rated load shall not be greater than 15 percent rated voltage.

c. The power supplies are capable of maintaining voltage and frequency within 5 percent of rated values for no less than 1.0 seconds following loss of input power.

d. The power supplies are nonessential since loss of output power due to open, short, or ground will cause reactor scram or isolation (safe).

8.1.4.3 Power Generation Design Bases

The unit is provided with eight BOP transformers which provide 13.8, 6.9, and 4.16 kV BOP ac power sources. See UFSAR Figure 8.1-001 for the transformers and ac power source configurations.

Four 125-volt dc systems, one 250-volt dc system, and two ±24-volt dc systems are provided for the BOP load groups. Two 125-volt dc systems are provided for the radial wells.

A separate raceway system is provided for the BOP power, control, and instrumentation cables.

The design of the BOP electric system is in accordance with the applicable ANSI, NEMA, and IPCEA standards.

These features are not directly related to the safety of the plant. Descriptions given in Section 8.3 are only in such depth and detail as to permit an understanding of the safety-related portions.

8.1.4.4 Design Criteria, Regulatory Guides, and IEEE Standards

8.1.4.4.1 Directly Applicable Criteria

The design of the offsite power and onsite Class IE electric systems is in accordance with the criteria, regulatory guides, and standards listed below. Table 8.1-1, "Identification of Safety-Related Criteria," contains a cross reference of FSAR sections and design criteria. Exceptions to the regulatory guides are summarized in Appendix 3A. A discussion of compliance to the General Design Criteria is included in Section 3.1.

a. General Design Criterion 17 - Electric Power Systems

b. General Design Criterion 18 - Inspection and Testing of Electric Power Systems

c. Regulatory Guide 1.6, (March 1971), "Independence Between Redundant Standby (Onsite) Power Sources and Between Their Distribution Systems"

d. Regulatory Guide 1.9, (July 1993), "Selection, Design, Qualification, and Testing of Diesel-Generator Units Used as Standby (Onsite) Electric Power Systems at Nuclear Power Plants"

e. Regulatory Guide 1.22, (February 1972), "Periodic Testing of Protection System Actuation Functions"

f. Regulatory Guide 1.29, (February 1976), "Seismic Design Classification"

g. Regulatory Guide 1.30, (August 1972), "Quality Assurance Requirements for the Installation, Inspection, and Testing of Instrumentation and Electric Equipment"

h. h.Regulatory Guide 1.32, (February 1977), "Criteria for Safety-Related Electric Power Systems for Nuclear Power Plants"

i. i.Regulatory Guide 1.40, (March 1973), "Qualification Tests of Continuous-Duty Motors Installed Inside the Containment of Water-Cooled Nuclear Power Plants"

j. Regulatory Guide 1.41, (March 1973), "Preoperational Testing of Redundant Onsite Electric Power Systems to Verify Proper Load Group Assignments"

k. Regulatory Guide 1.47, (May 1973), "Bypassed and Inoperable Status Indication for Nuclear Power Plant Safety Systems"

l. Regulatory Guide 1.53, (June 1973), "Application of the Single-Failure Criterion to Nuclear Power Plant Protection Systems"

m. Regulatory Guide 1.62, (October 1973), "Manual Initiation of Protective Actions"

n. Regulatory Guides 1.63, (October 1973/and February 1987), "Electric Penetration Assemblies in Containment Structures for Water-Cooled Nuclear Power Plants" (Note: Regulatory Guide 1.63 February 1987 applies only to fiber optic penetration assemblies.)

o. Regulatory Guide 1.73, (January 1974), "Qualification Tests of Electric Valve Operators Installed Inside the Containment of Nuclear Power Plants"

p. Regulatory Guide 1.75, (January 1975), "Physical Independence of Electric Systems"

q. Regulatory Guide 1.89, (November 1974), "Qualification of Class IE Equipment for Nuclear Power Plants"

r. Regulatory Guide 1.93, (December 1974), "Availability of Electric Power Sources"

s. IEEE Std 338-1975, "IEEE Standard Criteria for the Periodic Testing of Nuclear Power Generating Station Class IE Power and Protection Systems"

t. IEEE Std 344-1971/1975, "IEEE Recommended Practices for Seismic Qualification of Class IE Equipment for Nuclear Power Generating Stations" (Note: The Grand Gulf initial design conforms to the requirements of IEEE 344-1971 as modified by EICSB Branch Technical Position 10. SQRT review was subsequently performed against IEEE 344-1975. Qualification during the plant operating license stage is in accordance with IEEE 344-1975. See Section 3.10.)

u. IEEE Std 387-1972, "Criteria for Diesel Generator Units Applied as Standby Power Supplies for Nuclear Power Stations"

v. IEEE Std 387-1977, "IEEE Standard Criteria for Diesel-Generator Units Applied as Standby Power Supplies for Nuclear Power Generating Stations"

w. IEEE Std 387-1984, "IEEE Standard Criteria for Diesel-Generator Units Applied as Standby Power Supplies for Nuclear Power Generating Stations"

8.1.4.4.2 Indirectly Applicable Criteria

In addition to the criteria listed in subsection 8.1.4.4.1, there are other important criteria which appear at either a higher or lower level of application (for example, 8.1.4.4.1(n) Regulatory Guide 1.63 endorses IEEE 317-1972). Also in this class are industry and trade specifications included in material orders. Unless otherwise indicated, concurrence and implementation have been obtained.

a. IEEE Std 278-1967, "Guide for Classifying Electrical Insulating Materials Exposed to Neutron and Gamma Radiation"

b. IEEE Std 279-1971, "Class IE Electric Systems for Nuclear Power Stations"

c. IEEE Std 308-1974, "Class IE Power Systems for Nuclear Power Generating Stations"

d. IEEE Std 317-1972/1983, "Electrical Penetration Assemblies in Containment Structures for Nuclear Power Generating Stations" (Note: IEEE 317-1983 applies only to fiber optic penetration assemblies.)

e. IEEE Std 323-1971, "General Guide for Qualifying Class IE Electric Equipment for Nuclear Power Generating Stations"

f. IEEE Std 334-1971, "Standard for Type Test of Continuous Duty Class IE Motors for Nuclear Power Generating Stations"

g. IEEE Std 336-1971, "Installation, Inspection, and Testing Requirements for Instrumentation and Electric Equipment During Construction of Nuclear Power Generating Stations"

h. IEEE Std 450-1975, "Recommended Practice for Maintenance Testing and Replacement of Large Stationary Type Power Plant and Substation Lead Storage Batteries"

   Later editions of this standard may apply to specific Technical Specification testing requirements.

i. IEEE Std 484-1975, "IEEE Recommended Practice for Installation Design and Installation of Large Lead Storage Batteries for Generating Stations and Substations"

j. ANSI, NEMA, and IPCEA standards with effective dates as of the issue of the material orders

TABLE 8.1-1: IDENTIFICATION OF SAFETY-RELATED CRITERIA

Criteria	Title	Applicable 8.1	SAR Sections 8.2	Discussing 8.3.1	Compliance 8.3.2	SAR Sections Discussing Compliance with Safety Criteria for Plant as a whole
10 CFR Part 50						
10 CFR 50.34	Contents of Applications: Technical Information	8.1.4.1 8.1.4.2.1	8.2.1.1	8.3.1.1	8.3.2.1.1	
10 CFR 50.36	Technical Specifications					See Technical Specifications
10 CFR 50.55a	Codes & Standards	8.1.4.4.2				
General Design Criteria (GDC), Appendix A to 10 CFR Part 50						
GDC-1	Quality Standards and Records		8.2.1.2			3.1.2.1.1
GDC-2	Design Basis for Protection Against Natural Phenomena			8.3.1.1.1		3.1.2.1.2
GDC-3	Fire Protection		8.2.1.2	8.3.1.4.1c 8.3.1.2.3d		3.1.2.1.3
GDC-4	Environmental and Missile Design Bases		8.2.1.2			3.1.2.1.4
GDC-5	Sharing of Structures, Systems and Components			8.3.1.1.2.5		3.1.2.1.5
GDC-13	Instrumentation and Control					3.1.2.2.4
GDC-17	Electric Power Systems	8.1.4.4.1	8.2.1.2	8.3.1.2.1	8.3.2.2 8.3.2.2.1	3.1.2.2.8

TABLE 8.1-1: IDENTIFICATION OF SAFETY-RELATED CRITERIA (CONTINUED)

Criteria	Title	Applicable 8.1	SAR Sections 8.2	Discussing 8.3.1	Compliance 8.3.2	SAR Sections Discussing Compliance with Safety Criteria for Plant as a whole
GDC-18	Inspection and Testing of Electric Power Systems	8.1.4.4.1	8.2.1.2	8.3.1.2.1	8.3.2.1.7.8 8.3.2.1.7.9	3.1.2.2.9
GDC-21	Protection System Reliability and Testability	8.1.4.2.4 8.1.4.2.2		8.3.1.1.5		3.1.2.3.2
GDC-22	Protection System Independence	8.1.4.2.2 8.1.4.2.4		8.3.1.4.1		3.1.2.3.3
GDC-33	Reactor Coolant Makeup					3.1.2.4.4
GDC-34	Residual Heat Removal					3.1.2.4.5
GDC-35	Emergency Core Cooling					3.1.2.4.6
GDC-38	Containment Heat Removal					3.1.2.4.9
GDC-41	Containment Atmosphere Cleanup					3.1.2.4.12
GDC-44	Cooling Water					3.1.2.4.15
Institute of Electrical and Electronics Engineers (IEEE) Standards:						
IEEE-279 1971	Criteria for Protection Systems for Nuclear Power Generating Stations	8.1.4.4.2		8.3.1.2.1.b.15		

TABLE 8.1-1: IDENTIFICATION OF SAFETY-RELATED CRITERIA (CONTINUED)

Criteria	Title	Applicable 8.1	SAR Sections 8.2	Discussing 8.3.1	Compliance 8.3.2	SAR Sections Discussing Compliance with Safety Criteria for Plant as a whole
IEEE-308 1971	Criteria for Class 1E Electric Systems for Nuclear Power Generating Stations	8.1.4.4.2		8.3.1.2.1.a.6		8.3.2.2.1
IEEE-317 1972/1983*	Electric Penetration Assemblies in Containment Structures	8.1.4.4.2		8.3.1.2.3.1		
IEEE-323 1971	Standard for Qualifying Class 1E Equipment for Nuclear Power Generating Stations	8.1.4.4.2		8.3.1.2.1.a.7		
IEEE-334 1971	Standard for Type Test of Continuous Duty Class 1E Motors for Nuclear Power Generating Stations	8.1.4.4.2		8.3.1.1.6.1		
IEEE-336 1971	Installation, Inspection and Testing Requirements for Instrumentation and Electric Equipment During the Construction of Nuclear Power Generating Stations	8.1.4.4.2				
IEEE-338 1975	Criteria for Periodic Testing of Nuclear Power Generating Station Protection Systems	8.1.4.4.1				

(*) IEEE 317-1983 Applicable only to fiber optic penetration assemblies.

TABLE 8.1-1: IDENTIFICATION OF SAFETY-RELATED CRITERIA (CONTINUED)

Criteria	Title	Applicable 8.1	SAR Sections 8.2	Discussing 8.3.1	Compliance 8.3.2	SAR Sections Discussing Compliance with Safety Criteria for Plant as a whole
IEEE-344 1971/1975	Guide for Seismic Qualification of Class I Electrical Equipment for Nuclear Power Generating Stations	8.1.4.4.1				
IEEE-379	Guide for the Application of the Single Failure Criterion to Nuclear Power Generating Station Protection Systems					See Compliance to RG 1.53
IEEE-382	Trial-Use Guide for the Type-Test of Class 1 Electric Valve Operators for Nuclear Power Generating Stations (ANSI N416)					See Compliance to RG 1.73
IEEE-383	Standard for Type-Test of Class 1E Electric Cable Field Splices, and Connections for Nuclear Power Generating Stations					8.3.3.1
IEEE-384	Criteria for Separation of Class 1E Equipment and Circuits					See Exceptions to RG 1.75, Appendix 3A
IEEE-387 1972	Criteria for Diesel-Generator Units Applied as Standby Power Supplies for Nuclear Power Stations					

TABLE 8.1-1: IDENTIFICATION OF SAFETY-RELATED CRITERIA (CONTINUED)

Criteria	Title	Applicable 8.1	SAR Sections 8.2	Discussing 8.3.1	Compliance 8.3.2	SAR Sections Discussing Compliance with Safety Criteria for Plant as a whole
IEEE-415	Planning of Pre-Operational Testing Programs for Class 1E Power Systems for Nuclear Power Generating Stations					See Technical Specifications
IEEE-420	Trial-Use Guide for Class 1E Control Switchboards for Nuclear Power Generating Stations (ANSI N41.7)					See Compliance to IEEE Standards 279, 323, 344, 336,338
IEEE-450 1975	Recommended Practice for Maintenance, Testing and Replacement of Large Stationary Type Power Plant and Substation Lead Storage Batteries	8.1.4.4.2			8.3.2.2.1	
IEEE-484 1975	Recommended Practice for Installation Design and Installation of Large Lead Storage Batteries for Nuclear Power Plants	8.1.4.4.2				
IEEE-387 1977	IEEE Standard Criteria for Diesel Generator Units Applied as Standby Power Supplies for Nuclear Power Generating Stations	8.1.4.4.1			8.3.1.2.1	

TABLE 8.1-1: IDENTIFICATION OF SAFETY-RELATED CRITERIA (CONTINUED)

Criteria	Title	Applicable 8.1	SAR Sections 8.2	Discussing 8.3.1	Compliance 8.3.2	SAR Sections Discussing Compliance with Safety Criteria for Plant as a whole
IEEE-387 1984	IEEE Standard Criteria for Diesel Generator Units Applied as Standby Power Supplies for Nuclear Power Generating Stations	8.1.4.4.1			8.3.1.2.1	
Regulatory Guide (RG)						
RG 1.6 Mar 1971	Independence Between Redundant Standby (Onsite) Power Sources and Between Their Distribution Systems	8.1.4.4.1		8.3.1.2.1.a.3		
RG 1.9 July 1993	Selection, Design, Qualification, and Testing of Emergency Diesel Generator Units Used as Class 1E Onsite Electric Power Systems at Nuclear Plants	8.1.4.4.1		8.3.1.1.4.1 8.3.1.1.4.2 8.3.1.2.1		See Appendix 3A for Exceptions See Technical Specifications
RG 1.29 Feb 1976	Seismic Design Classification	8.1.4.4.1				
RG 1.30 Aug 1972	Quality Assurance Requirements for the Installation, Inspection, and Testing of Instrumentation and Electric Equipment	8.1.4.4.1				See Appendix 3A for Compliance

TABLE 8.1-1: IDENTIFICATION OF SAFETY-RELATED CRITERIA (CONTINUED)

Criteria	Title	SAR Sections Applicable 8.1	SAR Sections Discussing 8.2	SAR Sections Discussing 8.3.1	SAR Sections Compliance 8.3.2	SAR Sections Discussing Compliance with Safety Criteria for Plant as a whole
RG 1.32 Feb 1977	Criteria for Class 1E Electric Systems for Nuclear Power Plants	8.1.4.4.1		8.3.1.2.1.a.5		
RG 1.40 Mar 1973	Qualification Tests for Continuous-Duty Motors Installed Inside the Containment of Water Cooled Nuclear Power Plants	8.1.4.4.1				
RG 1.41 Mar 1973	Preoperational Testing of Redundant Onsite Electric Power Systems to Verify Proper Load Group Assignments	8.1.4.4.1				14.2.12.1.44.c.5
RG 1.47 May 1973	Bypassed and Inoperable Status Indication for Nuclear Power Plant Safety Systems	8.1.4.4.1				
RG 1.53 June 1973	Application of the Single-Failure Criterion to Nuclear Power Plant Protection Systems	8.1.4.4.1				
RG 1.63 Oct 1973 Feb 1987*	Electric Penetration Assemblies in Containment Structures for Water-Cooled Nuclear Power Plants	8.1.4.4.1		8.3.1.2.3.1		

(*) RG 1.63 Feb 1987 Applicable only to fiber optic penetration assemblies.

TABLE 8.1-1: IDENTIFICATION OF SAFETY-RELATED CRITERIA (CONTINUED)

Criteria	Title	Applicable 8.1	SAR Sections 8.2	Discussing 8.3.1	Compliance 8.3.2	SAR Sections Discussing Compliance with Safety Criteria for Plant as a whole
RG 1.68 Jan 1977	Preoperational and Initial Startup Test Programs for Water-Cooled Power Reactors					Refer to FSAR Section 14.2 for Compliance
RG 1.70 Sept. 1975	Standard Format and Content of Safety Analysis Reports for Nuclear Power Plants					Refer to Entire FSAR for Compliance
RG 1.73 Jan 1974	Qualification Tests of Electric Valve Operators Installed Inside the Containment of Nuclear Power Plants	8.1.4.4.1				
RG 1.75 Jan 1975	Physical Independence of Electric Systems	8.1.4.4.1		8.3.1.4.1 8.3.1.4.2		
RG 1.81 Jan 1975	Shared Emergency and Shutdown Electric Systems for Multi-Unit Nuclear Power Plants	8.1.4.4.1		8.3.1.1.2.5		
RG 1.89 Nov 1974	Qualification of Class 1E Equipment for Nuclear Power Plants	8.1.4.4.1				See Appendix 3A for Exceptions
RG 1.93 Dec 1974	Availability of Electric Power Sources	8.1.4.4.1				See Appendix 3A For Exceptions
RG 1.100 Mar 1976	Seismic Qualification of Electric Equipment for Nuclear Power Plants					See Appendix 3A for Compliance

TABLE 8.1-1: IDENTIFICATION OF SAFETY-RELATED CRITERIA (CONTINUED)

Criteria	Title	Applicable SAR Sections 8.1	8.2	Discussing 8.3.1	Compliance 8.3.2	SAR Sections Discussing Compliance with Safety Criteria for Plant as a whole
RG 1.106 Mar 1977	Thermal Overload Protection for Electric Motors on Motor-Operated Valves					7.1.2.6.22
RG 1.118	Periodic Testing of Electric Power and Protection Systems					See Note 1
RG 1.120	Fire Protection Guidelines for Nuclear Plants					See Note 1
RG 1.128	Installation Design and Installation of Large Lead Storage Batteries for Nuclear Power Plants					See Note 1
RG 1.129 April 1977	Maintenance, Testing and Replacement of Large Lead Storage Batteries for Nuclear Power Plants	8.1.4.4.2			8.3.2.2.1	
Branch Technical Positions (BTP) ICSB						
BTP ICSB 2	Diesel Generator Reliability Qualification Testing			8.3.1.1.4.1.1		
BTP ICSB 8	Use of Diesel Generator Sets for Peaking			8.3.1.1.4.1.b		
BTP ICSB 11	Stability of Offsite Power Systems	8.1.1 8.1.4.1.g	8.2.3			

TABLE 8.1-1: IDENTIFICATION OF SAFETY-RELATED CRITERIA (CONTINUED)

Criteria	Title	Applicable SAR Sections 8.1	8.2	Discussing 8.3.1	Compliance 8.3.2	SAR Sections Discussing Compliance with Safety Criteria for Plant as a whole
BTP ICSB 15	Reactor Coolant Pump Breaker Qualification					Not Applicable to Boiling Water Reactors
BTP ICSB 17	Diesel Generator Protective Trip Circuit Bypasses			8.3.1.1.4.1.f		
BTP ICSB 18	Application of the Single Failure Criterion to Manually-Controlled Electrically-Operated Valves					See Compliance to RG 1.53
BTP ICSB 21	Guidance for Application of RG 1.47					7.5.1.3

Note 1: Not addressed in FSAR. Section D of Regulatory Guide indicates not applicable based on construction permit docket date.

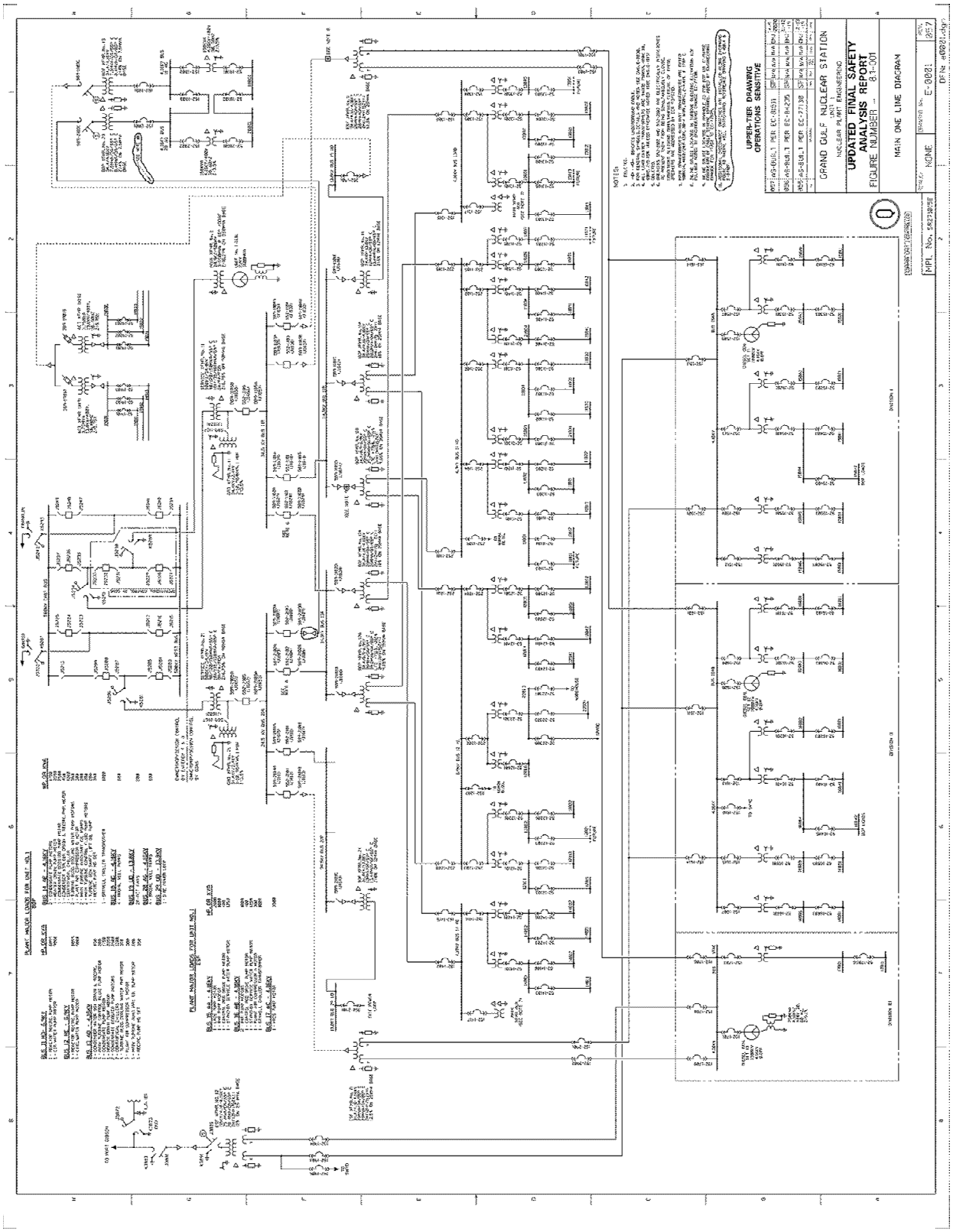
UPPER-TIER DRAWING
OPERATIONS SENSITIVE
GRAND GULF NUCLEAR STATION
UNIT 1
NUCLEAR PLANT ENGINEERING
UPDATED FINAL SAFETY
ANALYSIS REPORT
FIGURE NUMBER 8.1-001
MAIN ONE LINE DIAGRAM
NONE
E-0001
NPL No. 58218058

8.2 OFFSITE POWER SYSTEM

8.2.1 Description

8.2.1.1 Transmission System

[HISTORICAL INFORMATION] [The Entergy Mississippi, Inc./Entergy Electric Systems, as shown in Figures 8.2-1 and 8.2-2 and described in subsection 8.1.1, supply the offsite ac power for starting, normal operation, and safe shutdown.

The offsite power system was designed and constructed with sufficient capacity and capability to assure that specified acceptable fuel design limits and conditions are not exceeded as a result of anticipated operational occurrences, that the core is cooled; and that the containment integrity, and other vital functions are maintained in the event of postulated accidents.]

The offsite power system consists of two independent systems, the 500 kV system and the 115 kV system as shown in Figures 8.2-2 and 8.2-3. The source of control power for all incoming circuit breakers (from the offsite power sources) associated with the 4.16 kV buses 15AA, 16AB, and 17AC is shown in Figure 8.2-6.

As discussed in Sections 8.1.2 and 8.2.1.2 the 1999 agreement between Entergy Mississippi and SERI (Ref. 1) addresses commitments and responsibilities regarding the GGNS switchyard and related transmission matters.

500 kV System

[HISTORICAL INFORMATION] [The 500 kV switchyard accommodates two 500 kV overhead lines: one terminating at the Baxter Wilson Substation and the other at the Franklin Substation. Layout of this switchyard is a breaker-and-a-half configuration on the GGNS Unit 1 Generator/Service Transformer 11 string and two-breaker-two-bus configuration on the Baxter Wilson, Franklin, and Service Transformer 21 strings. Power is provided to the ESF buses from two 500/34.5 kV service transformers located in the 500 kV switchyard This is shown in Figure 8.2-3 and fully described in subsection 8.2.1.2.

Offsite ac power source to the 500 kV switchyard is from two 500 kV lines, from the Franklin 500 kV Substation and the Baxter Wilson 500 kV Substation.

115 kV System

The 115 kV system consists of an overhead 115 kV line from the Port Gibson Substation terminated near the plant site to an underground 115 kV cable. The 115 kV cable feeds a 115 kV/4.16 kV ESF transformer located adjacent to the plant. This is shown in Figure 8.2-3.

The bulk power transmission and generation needs of the Entergy Electric System are planned on a system wide basis. In 1965 the basic 500 kV system now in operation was designed and put into operation. The system has proven to be highly reliable and has met the needs of the various companies.

The system is about 400 miles from north to south and 150 miles from east to west and serves approximately 22,000 megawatts of load on peak. This system interconnects to the east with the Tennessee Valley Authority; at West Memphis, Arkansas, and West Point, Mississippi. It interconnects to the southwest with Entergy Gulf States, Inc. at Willow Glen, Louisiana, and to the west with Oklahoma Gas and Electric at Fort Smith, Arkansas. Agreements with each of these utilities provide a most reliable and widely dispersed source of power, when connected at 500 kV over such relatively short distances. These interconnections serve to enhance the reliability of the 500 kV bulk power system of the Entergy Electric System. Other connections exist at 345, 230, 161, and 115 kV as shown in Figure 8.2-1. Direct generation connections to the 500 kV transmission are at Arkansas Nuclear Number One, Baxter Wilson, and Little Gypsy; other connections are made through step-up transformers at substations at West Memphis, Mabelvale, El Dorado, Baxter Wilson, Ray Braswell, Franklin, and Waterford, all in the Entergy System. Other connections are at O.G. & E., S.W.P.A., and T.V.A. These diverse power inputs provide a highly reliable source of power for the grid that supplies offsite power for Grand Gulf.]

Although the overall 500 kV system has been highly reliable, equipment failures in the Baxter Wilson Switchyard in 2000 and 2001 caused load loss at GGNS due to actuation of the Load Rejection Relay.

[HISTORICAL INFORMATION] [The offsite preferred power sources are the two 500 kV lines discussed in subsection 8.2.1 above and the 115 kV line from the Port Gibson 115 kV Substation serving the 115/4.16 kV ESF 12 transformer. This 115 kV power source is

completely independent from any one of the 500 kV lines for offsite power. The 115 kV line is on a completely different right-of-way from any of the 500 kV lines, in its routing to the Port Gibson Substation. The Port Gibson Substation is connected on the north to the Baxter Wilson 115 kV Substation, via the South Vicksburg Substation, where the Baxter Wilson Unit Number One is connected to the 115 kV bus. Port Gibson is connected on the south at the Natchez Generating Station 115 kV Substation, via the Fayette Substation, where a 73 MW unit is connected to the 115 kV system.

The Baxter Wilson 500 kV line is approximately 21.47 miles long, the Franklin 500 kV line is approximately 43.6 miles long, and the 115 kV line from Port Gibson is approximately 5.48 miles long. The Grand Gulf to Port Gibson 115 kV line does not cross over or under any of the 500 kV offsite power supply lines except on the east side of the 500 kV switchyard at Grand Gulf. At this point the 115 kV line is installed underground at the crossing point of the Grand Gulf-Franklin 500 kV line so that the failure of the 500 kV line cannot cause failure of the 115 kV power line. Neither of the two Grand Gulf 500 kV lines or the Grand Gulf to Port Gibson 115 kV line are on any common towers or common right-of-way.

These considerations dictated the divergence of the lines as they emanated from the 500 kV substation. The lines are widely dispersed to minimize the probability of multiple concurrent line damage by tornadoes.]

The 500 kV grid transmission lines are designed with lattice steel towers. Foundations are reinforced, poured-in-place concrete with embedded stub angles. The conductors are 954 MCM ACSR with three conductors per phase arranged in a delta configuration. Conductor spacers are provided at about 240 feet spacing. Each span is provided with dampers on each conductor. The line is designed to meet the National Electrical Safety Code in all respects with the lines from Grand Gulf designed to meet the edition of the code in effect at the time of construction. Design loading conditions are one half inch of ice, 105 miles per hour wind.

Because of these design parameters, there have been no problems with aeolian vibration or galloping of the conductors. In all applications, this design has proven adequate for the conditions of this area.

Recent design changes and modifications of the light tangent 500 kV towers has increased the withstand capability of these towers in high winds. These towers were suspected to be weak in the longitudinal direction and test proved this to be so on towers having 25-foot and 30-foot leg extensions. These towers have been modified and are by test, capable of withstanding 110 mph wind loads. Although tornadoes are damaging and the destruction can be substantial, there has only been an average loss of two towers per year in the first 12 years of operation of the Entergy Mississippi, Inc. portion of the grid.

The 500 kV line from the Baxter Wilson substation has a nominal rating of 2598 MVA and the 500 kV line from the Franklin substation has a nominal rating of 1732 MVA. Additional 216 MVAR capacitor banks were installed in various 5000kV substations to meet EPU conditions (Ref. 3). This will meet the requirements under any expected contingencies.

The nominal voltage of the 500 kV grid is 510 kV. The maximum voltage of the grid is 525 kV. The minimum allowable voltage of the 500 kV grid is 491 kV. Recorded grid voltages in the past years indicate no voltage outside these limits.

8.2.1.2 Switchyard

[HISTORICAL INFORMATION] [The two 500 kV and one 115 kV lines described in subsection 8.2.1.1 provide three physically independent sources of preferred power to the three independent and redundant ESF load groups within the station.]

In Figure 8.1-1, which shows switchyard design responsibility, demarcation lines are similar for equipment ownership with Entergy Mississippi, Inc. owning equipment with Entergy Mississippi, Inc. design responsibility and SERI owning equipment with original design shown by Bechtel. Under the 1999 Entergy Mississippi/SERI agreement on switchyard and transmission interface (Reference 1) issues addressed and defined are:

- Exclusion Area Control, Switchyard Access and Security
- Operation of Equipment and Activities Performed in the Switchyard
- Maintenance of Switchyard Equipment
- Coordination of Planned Plant Outages and Activities Directly Affecting Power Supply to GGNS

- Review and Approval of Changes Which Might Affect Compliance with Regulatory Requirements and Commitments Which Could Affect Offsite Power Supply to GGNS and
- Procedures and Training on the Critical Need for Power at GGNS During Emergencies

SERI has transferred its maintenance and any related operational responsibilities to Entergy Operations, Inc.

In the manner stated in subsection 8.2.1.1, the 115 kV line approaches the 115 kV switchyard at the east end outside of the 500 kV switchyard. From that point the 115 kV power is brought into the station by underground duct and overhead lines as shown in Figure 8.2-3. The 500 kV switchyard is constructed on the east side of Grand Gulf; the 500 kV lines emanate to the east and to the north as shown in Figure 8.2-3. Included within its boundaries are the 500/34.5 kV service transformers and 34 kV oil breakers referred to as the "34.5kV switchyard" which provide two redundant offsite sources to the 34.5/4.16 kV ESF transformers as shown in Figure 8.1-1.

The station is constructed with rigid aluminum tubing supported on insulators and galvanized towers and pedestals. The breakers are 500 kV dead tank, arc suppressing. The layout of the substation is shown in Figure 8.2-3. The buses are constructed at 30 feet and 55 feet heights above ground. The buses are designed to withstand a maximum fault on any section. This is the maximum force-loading that the buses will be subjected to. Similar designs have been used in the past at the Baxter Wilson, Ray Braswell and Franklin 500 kV Substations and have proven to be adequate under all electrical fault and environmental conditions. [HISTORICAL INFORMATION] [The breaker switching configuration provides for the isolation of any faulted line without affecting the operation of any other line. This scheme also provides for the isolation of any one breaker in the 500 kV bus for inspection or maintenance without affecting the operation of any of the connecting lines or any other connection to the buses. The buses have adequate capacity to carry its load under any postulated switching sequences. The design provides for the isolation of any breaker, connecting the unit to the substation buses, without limiting the operation of the unit or any line connecting to the 500 kV power grid. Also either 500/34.5 kV service transformer breaker can be isolated and inspected or maintained as needed without affecting any line

or unit input. Either of the 500/34.5 kV service transformers can be taken out of service for inspection or maintenance without jeopardizing the operation for the other service transformer.

A fault of any section of 500 kV bus will be cleared by the adjacent breakers and will not interrupt operation of any of the remaining part of the 500 kV switchyard bus. Only that element connected to the faulted section will be interrupted.

The 500 kV substation is supplied with a breaker failure protective scheme in accordance with the North American Power Systems Interconnection Committee (NAPSIC) rules.

The switchyard is designed with a completely redundant protective scheme. There are three sources of ac auxiliary power with independent sets of power cables in physically separated raceways. There are two completely separate sets of dc batteries for dc supply with cables also separated physically in raceways.]

The two 4.16 kV auxiliary ac supplies originate at sources as shown on Figure 8.1-1. The other supply originates from the 13.8 kV bus in the 115 kV switchyard. Each is rated for 1000 kVA, and its design load is 225 kW when servicing a single system in the switchyard. The arrangement for the distribution of the ac power in the switchyard is shown in Figure 8.2-4.

The system is designed with adequate auxiliary equipment, standby power, and protection to provide maximum continuity of service, to thus insure operation of the essential switchyard auxiliary equipment during normal and emergency operating conditions, both during and after plant construction.

Of the three auxiliary ac power sources provided, one functions for normal switchyard service. The other two sources operate as standby sources for the normal operating system. The system shall automatically switch to a standby source on loss of the normal operating system.

An electrical interlock on breakers T01-2 and T02-2 prevents simultaneous operation of both systems on emergency supply T0-3). Manual override allows both systems to operate simultaneously on emergency supply.

The switchyard service power system will be aligned as shown on Figure 8.2-4.

The transfer switch shall automatically transfer its load circuit to an emergency or alternate power supply upon failure of its normal or original supply. Upon restoration of the normal supply, the transfer switch shall automatically retransfer its load circuits to the normal supply.

To avoid retransfer to an unstable normal supply, a retransfer delay of 0-5 minutes (adjustable) is provided. Time delay retransfer shall be bypassed on loss of emergency supply.

The transfer switch is a mechanically held device utilizing two circuit breakers. Circuit breakers are adjustable thermal magnetic breakers complete with wiring terminals. Circuit breaker lockout is provided to prevent transfer to emergency supply in case the normal breaker trips on overcurrent. The breaker handles are operated by a common transfer mechanism to provide fast-transfer, double throw switching action.

The transfer switch is mechanically and electrically interlocked so that a neutral position shall not be possible when under electrical operation. Nor shall it be possible for load circuits to be connected to normal and emergency sources simultaneously, regardless of whether the switch is electrically or manually operated.

The switch, however, has a manual neutral position for ease of load circuit maintenance. Manual operation may be accomplished by one person.

For complete protection, switches which close differential voltage sensing relays are provided to monitor each phase of the normal supply. A drop in voltage in any phase below the predetermined dropout value of the relay shall initiate load transfer. The relay(s) shall initiate retransfer of the load to the normal supply as soon as the voltage is restored in all phases beyond the predetermined pickup value of the relay.

Voltage sensing relays are electro-mechanical type. These relays are nominally set for 70 percent dropout and 90 percent pick-up.

The transfer switch obtains its operating current from the source to which the load is being transferred. Control power is separately fused for 120 V ac.

A key interlock on breakers P1-1, P1-2, P2-1, and P2-2 allows only three out of four breakers to be closed simultaneously.

The switchyard general alarm, signaled by the Balance-of-Plant (BOP) Process Computer, alerts the control room operator of abnormal or alarm conditions in switchyard components. The conditions which result in a switchyard general alarm are listed in Table 8.2-2. The switchyard annunciator panel provides the alarm signal to the process computer. The computer signals the alarm only. It does not identify the switchyard source. Upon receipt of the general alarm, the control room operator dispatches personnel to the switchyard control house to identify the source alarm point at the switchyard annunciator panel. Further operator action is dictated by the appropriate alarm response instruction or the Entergy Mississippi, Inc. dispatcher. Further detailed information regarding the alarm condition is obtained locally at the alarming switchyard component.

[HISTORICAL INFORMATION] [The dc requirements for the switchyard relay and control systems are provided by two independent sets of 125 volt batteries. Each of these dc systems is supported by its own charger which has redundant ac power supplies. The distribution systems for the two battery systems are physically separated in so far as possible in all areas. This separation extends to dual cable tray systems in the control building and dual cable trenches in the switchyard. The communications facilities and power line carrier are also supplied by the 125 volt batteries.

All of the protective relay systems in the 500 kV switchyard are redundant. These schemes are overlapping so that each switchyard high-voltage component is covered by at least two sets of protective relays. Where the relay systems are redundant, each scheme is supplied with separate current inputs, operates on a separate battery system, and is connected to separate trip coils of the power circuit breakers. The potentials for these schemes are provided from one set of potential transformers on each 500 kV bus. The secondary potentials are separated into two systems at the junction box in the switchyard and are treated as redundant systems from this point with separation by cable trenches and trays. In addition, a potential transfer scheme is provided between the primary potentials of each bus to the opposite bus and the redundant potentials of each bus to the opposite bus.

Batteries are physically separated by being installed in separate battery rooms within the control room. All cables leaving the control room exit through terminal cabinets associated with either the primary or redundant cable trench system. All breaker closing functions are associated with the backup dc system.

The physical separation between the preferred power sources from the service transformers and ESF transformers to the onsite Class IE power system is shown pictorially in Figure 8.2-3 to the point where the voltage is transformed down to 4.16 kV. This occurs at the three ESF transformers. Figure 8.2-5 expands and details Figure 8.2-3, for clarity, and provides additional detail on separation of the three divisions from the point described to the ESF load groups shown in Figure 8.3-3.

The preferred power sources are not Class IE and are not manufactured and purchased under a quality assurance program as described in Chapter 17. However, all material is the highest grade of commercial equipment manufactured to the industrial standard listed in subsection 8.2.1.4. The design has been made in the same fashion as Class 1 systems and subjected to essentially the same reviews, checks, and calculation methods. This design is considered to meet the requirements of General Design Criterion 1 as evoked for the offsite (preferred) power system.]

In satisfaction of General Design Criterion 3, the three offsite power systems have spatial separation and/or totally enclosed raceways over their entire length. Fire protection and detection is provided as discussed in subsections 9.5.1 and 9.5.1.2.2.4.

In satisfaction of General Design Criterion 4, two of the offsite power sources are routed in duct banks and trenches below grade in exterior areas, and the third source is routed overhead in cable trays. There is great spatial distance between the cable tray route and the below grade routes as physically depicted in Figure 8.3-5.

Thus all features of the offsite (preferred) power supply are designed to provide maximum practical reliability and total redundancy in servicing the station safety load groups. Compliance with General Design Criterion 17, “Electric Power System,” is demonstrated by supplying the switchyard with offsite ac power by means of two 500 kV and one 115 kV physically independent circuits. Furthermore, the offsite power sources to the engineered safety features (ESF) buses are then brought in by

three physically independent circuits from this switchyard and the 115 kV transformer through ESF transformers. Physical separation, the breaker switching configuration, redundant switchyard protection systems, and transmission system are designed on load flow and stability studies so as to minimize simultaneous failure of all offsite power sources.

Station Service Transformers ST11 and ST21 and Engineered Safety Features Transformer ESF12 are monitored with an Open Phase Detection System. NRC Bulletin 2012-01 discusses that an Open Phase Condition, with or without accompanying ground faults, located on the high voltage side of a transformer connecting a GDC-17 offsite power circuit to the plant electric system, could result in a degraded condition in the onsite power system. Redundant Open Phase Detection Systems are installed on ST11, ST21, and ESF12 to monitor for an Open Phase Condition. Upon detection of an Open Phase Condition, the system provides an alarm to the Main Control Room and trip signals to protect the ESF loads by isolating them from the OPD condition.

Compliance with General Design Criterion 18 is achieved by designing testability and inspection capability into the system and then implementing a comprehensive testing and surveillance program. Surveillance and monitoring is further discussed in subsection 8.2.1.3. As previously stated in this subsection, the inspection and testing of the 500 kV, 115 kV, and 34.5 kV breakers, disconnects, and the transmission line protective relaying can be done on a routine basis, without removing the service and engineered safety features transformers and most transmission lines (offsite circuits) from service.

Compliance with General Design Criteria 17 and 18 at the onsite power interface is additionally addressed in subsection 8.3.1.2.

8.2.1.3 Offsite Power System Monitoring and Surveillance

The transmission lines of Entergy Mississippi, Inc. are routinely inspected by an aerial observer and those lines employing wooden poles are periodically inspected by walking patrol. These inspections are done in accordance with Entergy Transmission Maintenance Standards to ensure continued reliable operation of the transmission lines.

Routine maintenance on power circuit breakers will be performed as required to verify that all design criteria for operation are not exceeded.

As discussed in Sections 8.1.2 and 8.2.1.2, the Entergy Mississippi/SERI switchyard agreement addresses maintenance of offsite power supply equipment.

Control and protective breakers are separated to the maximum extent possible to ensure that failure of any item will not impair system protection.

Calibration checks of the protective relay systems in the switchyard will be performed on a routine interval not to exceed two fuel cycles. Functional checks of relay and control equipment will also be made on a two-fuel cycle interval.

Protective relay operation is annunciated locally and/or in the control room (PGCC) and may be simultaneously inputed to the balance-of-plant computer. The computer acts as a data logger with or without additional alarm, dependent on the nature of the protective action. A tabulation of these alarms is given in Table 8.2-2.

[HISTORICAL INFORMATION] [The Entergy Mississippi, Inc. system dispatcher has control of all 500 kV switchyard components except for the synchronizing breakers, which are under control of the plant operator.
Information transmitted back to the system dispatcher includes watt and var loadings of all lines, transformers, and generators, as well as status of all controlled devices. Various switchyard alarms are also transmitted to the system dispatcher to enable him to take necessary steps to have problems corrected before they become serious. In addition to the SCADA system that reports to the Entergy Mississippi, Inc. system dispatcher, a separate remote supervisory is in operation. This unit will report to the Entergy System Operating Center in Pine Bluff, Arkansas for input to the Entergy generation control, Fossil Energy Management Organization in Houston, Texas, and Cooperative Energy control center. Quantities transmitted include watt and var loadings watt accumulator points.] The events involving switchyard components requiring plant operator information or action are annunciated in similar fashion as the protective devices, and are tabulated in Table 8.2-2.

8.2.1.4 Standards and Guides

In addition to the NRC Design Criteria and NAPSIC document addressed in subsection 8.2.1.2, the following listed industry guides and standards, and references thereto, have been used in the design and procurement of the offsite power system:

a. IEEE Standard 450-1972, IEEE Recommended Practice for Maintenance, Testing and Replacement of Large Stationary Type Power Plant and Substation Lead Storage Batteries

b. ANSI C37.010-1969, Application Guide for AC High Voltage Circuit Breakers

c. ANSI C37.90-1971, IEEE Standard for Relays and Relay Systems Associated with Electric Power Apparatus

d. ANSI C57.12.00-1968, General Requirements for Distribution, Power, Regulating Transformers and Shunt Reactors

e. IPCEA Standard SS-66-524-1971, Cross-Linked-Thermosetting Polyethylene Insulated Wire and Cable for Transmission and Distribution of Electrical Energy

8.2.2 Analysis

8.2.2.1 Availability Considerations

As discussed in Subsection 8.2.1.2, the Entergy Mississippi/SERI switchyard agreement addresses coordination of activities directly affecting power supply to GGNS and procedures and training on the critical need for power at GGNS during emergencies.

[HISTORICAL INFORMATION] [The 500 kV and 115 kV transmission lines and their associated structures, interconnecting the switchyard with the system, are designed to withstand the loading conditions for environmental conditions prevalent in the area in regard to wind, temperature, lightning, and flood so as to minimize failure.

The transmission lines approach the switchyard on separate rights-of-way on the east side of the switchyard. Due to this separation, failure of one line will not cause failure of another line.

Constructively, three independent and redundant transmission lines are provided as initial offsite (preferred) power sources to the safety load groups. Upon merging in the switchyard, independence of one 500 kV line is lost, but three completely independent offsite sources are made available for the safety load groups which, as is shown in Section 8.3, remain independent down to the lowest voltage level of distribution.] These sources are the two 34.5-4.16 kV and one 115-4.16 kV ESF transformers as shown in Figure 8.1-1.

The 500 kV switchyard utilizes both “breaker-and-a-half” and “two-breaker-two-bus” configuration for its inter-bus circuits, along with breaker failure backup protection. With this configuration, reliability, and operating flexibility:

a. Any transmission line can be cleared under normal or fault conditions without affecting any other transmission line

b. Any system circuit breaker can be isolated for maintenance without interrupting the power or protection to any circuit.

c. Short circuits on a section of a bus are isolated without interrupting service to any circuit other than that connected to the faulty bus section.

[HISTORICAL INFORMATION] [The 500 kV switchyard is provided with two independent dc power systems which provide a highly reliable and continuously available source of dc power. Also three physically independent auxiliary ac power circuits are provided. Two of the three ac sources are derived from separate ESF buses which can be fed from the diesel generator. These provisions minimize the possibilities of losing ac and dc power sources in the switchyard.

The two 34.5 kV switchyards are independent of each other. Each 34.5 kV switchyard receives an independent auxiliary ac power feed from the 500 kV switchyard, and two independent dc control power feeds from the plant BOP dc batteries. Each 34.5 kV switchyard has a main incoming breaker and several feeder breakers. Each 34.5-4.16 kV ESF transformer is controlled by a 34.5 kV breaker. The main incoming breakers are provided with two trip coils, each controlled from a different battery.

The three independent circuits from the switchyard to the engineered safety features transformers are routed separately as shown in Figure 8.2-3. Due to this separation, a failure of one circuit will not cause the failure of the other circuits. Therefore, and as previously stated, these three transformers provide separate and redundant sources to safety load groups.

While it is improbable that all transmission lines could be out of service simultaneously, such an event would not jeopardize a safe shutdown of the station because the onsite standby diesel generators would be able to supply the necessary power to systems required for safe shutdown or LOCA.]

With any single line in service under its design condition of operation, sufficient offsite power would be available to handle a LOCA and subsequent safe shutdown of the unit.

8.2.3 Stability

[HISTORICAL INFORMATION] [Entergy Corporation is a member of the Southeastern Electric Reliability Council (SERC). Guidelines of the SERC provide assurance that transmission systems that are part of the interconnected network are planned, designed, and constructed to operate reliably within thermal, voltage, and stability limits. Through membership in the SERC, GGNS ensures grid stability such that there is reasonable assurance that the ability of the Entergy grid to provide offsite power to the Grand Gulf Nuclear Station will not be impaired by the loss of the largest external single supply to the grid, the loss of the most critical transmission line, or the loss of the Grand Gulf Unit itself. Standard stability studies, updated periodically, confirm that the offsite network performs in a stable, reliable manner in response to system perturbations.] To ensure stability after the Extended Power Uprate (EPU), capacitor banks were added to several substations (see Ref. 3).

A listing of contingencies, as conducted for 2020 Light Load and 2022 Summer Peak for Unit No. 1 at Grand Gulf, is attached in Table 8.2-3. This list indicates that there are no overloads or unacceptable bus voltages during these contingencies. These studies also indicate that the system is adequate to maintain the offsite sources during any postulated accidents.

The system is stable under all conditions that were studied. The Stability studies have been conducted in recent years for each major addition to the system and each study has indicated the system to be stable for each contingency. These values are dynamic in nature and depends on transmission system topology and generator status (within vicinity of GGNS) in the long term transmission models maintained by Entergy’s Transmission Planning group. Contact Entergy’s Transmission Planning group to obtain current set of values.

8.2.4 Operating Limits

The continuous operating limits that were utilized in the design of the auxiliary electrical distribution system for Grand Gulf are as follows:

1. System Voltage

   a. 500 kV system - nominal: 510 kV

      minimum: 491 kV

      maximum: 525 kV

b. 115 kV system - nominal: 115 kV

minimum: 112.125 kV

maximum: 120.75 kV

2. System Frequency - nominal: 60 Hz

minimum: 58.5 Hz

maximum: 61.8 Hz

3. System Capacity

a. 500 kV system - minimum: 6004 MVA

b. 115 kV system - minimum: 481 MVA

The basis for the selection of the operating limits is as follows:

1. System Voltage: The system voltage limits are dictated in part by the following considerations:

a. The ability to start and operate electrically driven equipment for all conditions of system voltage extremes without exceeding the voltage tolerances of the motors (± 10%)

b. The ability to operate the turbine generator within its continuous operation, extreme voltage limits (± 5%) while maintaining rated output

The limit for minimum 500 kV system voltage is established by site analysis of the Class 1E ESF buses to be ≥ 487.5 kV or 0.975 per unit. An allowable value of ≥ 491 kV includes an allowance for instrument uncertainty associated with the voltage measurement in the switchyard. Surveillance procedures check that adequate electrical voltage and frequency levels exist on the offsite power sources. Indicated voltage and frequency values from the switchyard are checked against the continuous operating limits for system voltage and system frequency.

2. System Frequency: The system frequency limits are dictated in part by the following considerations:

   a. The ability to maintain continuous operation of the electrically driven equipment without exceeding the frequency tolerances of the motors (± 5%)

   b. The ability to operate the turbine generator within its continuous operation, extreme frequency limits (- 5%, + 3%) while maintaining rated output

3. System Capacity: The system capacity limits are a function of the transmission system configuration and its effect on the minimum available short circuit level. For the 500 kV switchyard, the system capacity figure of 6004 MVA is equivalent to the minimum short circuit level available from the transmission system with only one EHV line in service (Baxter Wilson line). The 115kV Port Gibson line minimum short circuit system capability is 481 MVA with only the transmission line from Baxter Wilson to

Port Gibson in service. The 115kV line integrity and load flows are monitored by Entergy Mississippi, Inc. dispatchers, while capacity is not. Switching performed on the 115kV line is cleared with the GGNS operator and the operator is verbally informed by the Entergy Mississippi, Inc. dispatchers as to the status of the line.

Power within the Entergy Electric System will be distributed by the Entergy System operator in Pine Bluff, Arkansas, through the Entergy Mississippi, Inc. dispatcher in Jackson, Mississippi. Entergy Corporation is a member of the Southeastern Electric Reliability Council and adheres to the rules set by the North American Electric Reliability Council (NERC). The Entergy System operator follows the recommendations of the NERC Operating Guides in maintaining voltage and frequency throughout the system and coordinates the distribution of real and reactive power.

8.2.5 REFERENCES

1. Letter, M. R. Kansler to W. A. Eaton, "Switchyard and Transmission Interface Agreements," March 31, 1999 (CEO-99/00088)

2. Not Used

3. Letter, A. B. Wang, NRC to Vice President, Operations, Entergy Operations, Inc., Grand Gulf Nuclear Station, "Grand Gulf Nuclear Station Unit 1 - Issuance of Amendment RE: Extended Power Uprate (TAC No. ME4679)," July 18, 2012

TABLE 8.2-1: DELETED

TABLE 8.2-1A: DELETED

TABLE 8.2-2: SWITCHYARD ALARMS AND ANNUNCIATION

	SOE	PGCC Annun	LOC Annun	Computer W/o Alm	Computer W/Alm
Service Trans ST11 Alarm					
Ser. Trans. ST11 PRI L/O Trip	X	X		X	
Loss of Cont Volt		X		X	
Serv. Trans Sec L/O Trip	X	X		X	
Open Phase Detection			X		
Winding Temp HI			X	X	
Oil Temp HI			X	X	
PRD Operate			X	X	
Oil Flow LO			X	X	
Cooler Power U/V			X	X	
Gas Detector Oper.			X	X	
Low Oil Level			X	X	
Sudden Press Trip	X	X			
Sudden Press Oper			X		X
Serv XFMR Trouble		X			
Cooler Power Auto Transfer			X	X	
ST11 XFMR Primary Diff. Relay	X				
Grnd. XFMR 11 Overcurrent Relay	X				
Grnd. XFMR 11 Neutral O/C Relay	X				
ST11 XFMR BU Diff. Relay	X				
ST11 XFMR O/C Relay	X				
ST11 XFMR Neutral O/C Relay	X				
Grndg XFMR 11 OV. Volt Relay	X				

TABLE 8.2-2: SWITCHYARD ALARMS AND ANNUNCIATION (CONTINUED)

	SOE	PGCC Annun	LOC Annun	Computer W/o Alm	Computer W/Alm
Service Trans ST21 Alarm					
Ser. Trans. ST21 PRI Lockout Trip	X	X	X		
Loss of Cont Volt		X	X		
Ser. Trans. ST21 Sec L/O Trip	X	X		X	
Winding Temp HI			X	X	
Oil Temp HI			X	X	
PRD Operate			X	X	
Oil Flow LO			X	X	
Cooler Power U/V			X	X	
Gas Detector Oper.			X	X	
Low Oil Level			X	X	
Sudden Press Trip	X	X			
Sudden Press Oper			X		X
Serv XFMR Trouble		X			
Cooler Power Auto Transfer			X	X	
ST21 XFMR PRI Diff. Rly	X				
Grndg XFMR 21 O/C Diff. Rly	X				
Grndg XFMR 21 Neutral O/C Rly	X				
ST21 XFMR BU Diff. Rly	X				
Open Phase Detection			X		
ST21 O/C Relay	X				
ST21 Neutral O/C Rly	X				
Grndg XFMR 21 OV. Volt Relay	X				

TABLE 8.2-2: SWITCHYARD ALARMS AND ANNUNCIATION (CONTINUED)

Alarm Description	SOE	PGCC Annun	LOC Annun	Computer W/o Alm	Computer W/Alm
GCB J5204 Position					X
GCB J5208 Position					X
GCB J5216 Position					X
GCB J5224 Position					X
GCB J5228 Position					X
GCB J5232 Position				X	
GCB J5236 Position				X	
GCB J5240 Position				X	
GCB J5248 Position				X	
DISC J5222 Position				X	
DISC J5242 Position				X	
DISC J5230 Position				X	
DISC J5234 Position				X	
DISC J5206 Position				X	
Bkr J5228 Failure Trip	X				X
Bkr J5232 Failure Trip	X				X
34kV Bus 21R Lockout Trip		X		X	

TABLE 8.2-2: SWITCHYARD ALARMS AND ANNUNCIATION (CONTINUED)

Alarm Description	SOE	PGCC Annun	LOC Annun	Computer W/o Alm	Computer W/Alm
Bus 21R Loss of Cont Volt					X
34kV Bus 11R Lockout Trip		X		X	
Bus 11R Loss of Cont Volt					X
Generator Brkr Auto Trip J5228	X				X
Generator Brkr Auto Trip J5232	X				X
Bkr J1656 Trip		X		X	
Bkr J1632 Trip		X		X	
Bkr J1636 Trip		X		X	
Bkr J1628 Trip		X		X	
Bkr J1640 Trip		X		X	
Comp Press Low J1656					X
Comp Press Low J1632					X
Comp Press Low J1636					X
Comp Press Low J1628					X
Comp Press Low J1640					X
Brkr J1652 Trip		X		X	
Brkr J1612 Trip		X		X	
Brkr J1608 Trip		X		X	
Brkr J1604 Trip		X		X	
Brkr J1616 Trip		X		X	
Comp Press Low Brkr J1652					X

TABLE 8.2-2: SWITCHYARD ALARMS AND ANNUNCIATION (CONTINUED)

Alarm Description	SOE	PGCC Annun	LOC Annun	Computer W/o Alm	Computer W/Alm
Comp Press Low Brkr J1612					X
Comp Press Low Brkr J1608					X
Comp Press Low Brkr J1604					X
Comp Press Low Brkr J1616					X
Brkr J1652 Failure L/O Trip					X
Brkr J1656 Failure L/O Trip					X
GCB J5204 Trouble Alarm					X
GCB J5208 Trouble Alarm					X
GCB J5216 Trouble Alarm					X
GCB J5224 Trouble Alarm					X
GCB J5228 Trouble Alarm					X
GCB J5232 Trouble Alarm					X
GCB J5236 Trouble Alarm					X
GCB J5240 Trouble Alarm					X
GCB J5248 Trouble Alarm					X

TABLE 8.2-2: SWITCHYARD ALARMS AND ANNUNCIATION (CONTINUED)

Switchyard General Alarm (Consists of the Following)

- Relay Potential Failure West Bus Backup
- Relay Potential Failure East Bus Backup
- Low Battery "D"-125 V dc-Primary
- Low Battery "D"-48 V dc-Primary
- Loss of Station ac No.1 Primary
- Low Battery "E" 125 V dc-Backup
- Low Battery "E" 48 V dc-Backup
- Loss of Station ac No. 2 - Backup
- Relay Potential Failure-West 500 kV Bus Primary
- Relay Potential Failure-East 500 kV Bus Backup
- Loss of ac Source No. 1-Unit 1 ESF
- Station Power Switch-T01-Emergency Position
- Station Power Switch-TO2-Emergency Position
- Station Power Switch-T03-Emergency Position

TABLE 8.2-3: GRAND GULF LOAD FLOW STUDIES

Case	Contingency Description	Result (See Note 1)
1	Base Case - Normal Conditions	No Problems
2	Port Gibson Capacitor Bank Out of Service & GGNS Online	No Problems
3	Port Gibson Capacitor Bank Out of Service & GGNS Online	No Problems
4	Swartz To Alto 115kV Out Of Service & GGNS Offline	No Problems
5	Winnsboro To Gilbert 115 kV Out Of Service & GGNS Offline	No Problems
6	Franklin To Meadville 115 kV Out Of Service	No Problems
7	Natchez to Washington Out of Service & GGNS Offline	No Problems
8	Baxter Wilson To So. Vicksburg 115 kV Out Of Service & GGNS Offline	No Problems
9	Port Gibson To So. Vicksburg 115 kV Line Out of Service & GGNS Offline	No Problems
10	Port Gibson To Lorman 115 kV Out of Service & GGNS Offline	No Problems
11	Natchez To Fayette 115 kV Out Of Service & GGNS Offline	No Problems
12	Ray Braswell To Baxter Wilson 500kV Out Of Service & GGNS Offline	No Problems
13	Baxter Wilson To Perryville 500kV Out Of Service & GGNS Offline	No Problems

TABLE 8.2-3: GRAND GULF LOAD FLOW STUDIES (CONTINUED)

Case	Contingency Description	Result (See Note 1)
14	Franklin To Ray Braswell 500kV Out Of Service & GGNS Offline	No Problems
15	Franklin To McKnight 500 kV Out Of Service & GGNS Offline	No Problems
16	Franklin To GGNS 500 kV Out Of Service & GGNS Offline	No Problems
17	Baxter Wilson To GGNS 500 kV Out Of Service & GGNS Offline	No Problems
18	Franklin To Adams Creek 500 kV Out Of Service & GGNS Offline	No Problems
19	Baxter Wilson Unit 1 Out Of Service & GGNS Offline	No Problems
20	Baxter Wilson Unit 2 Out Of Service & GGNS Offline	No Problems
21	Baxter Wilson 500/11 kV Auto Transformer Out Of Service & GGNS Offline	No Problems

Note 1

The Load Flow Studies for the Transmission Grid were performed using the latest power flow models of the Entergy Transmission System including 2020 Light Load and 2022 Summer Peak conditions. The results of the analysis indicate that the contingencies in the area around Grand Gulf (GGNS) will produce voltages at the GGNS 500KV and 115KV buses that are within the limits given in GEXI2015-00001.

TABLE 8.2-4: SYSTEM STABILITY STUDIES

Fault Cases in this Study: 3 Phase faults simulated for stability analysis					
CASE	**LOCATION**	**TYPE**	**CLEARING TIME (cycles)**	**BREAKER TRIP #**	**TRIPPED FACILITIES ?**
Fault 1	G. Gulf - B. Wilson 500 kV	3 PH	5	J5224, J5216, J2240, J2244	G. Gulf - B. Wilson 500kV
Fault 2	G. Gulf - Franklin 500 kV	3 PH	5	J2425, J2420, J5248, J5240	G. Gulf - Franklin 500kV
Fault 3	B. Wilson - Perryville 500 kV	3 PH	5	R7372, R9872, J2233, J2218	B. Wilson - Perryville 500kV
Fault 4	B. Wilson - Ray Bras-well 500 kV	3 PH	5	J4928, J4920, J2230, J2233	B. Wilson - Ray Bras-well 500 kV
Fault 5	B. Wilson 500/115kV transformer #1	3 PH	5	J2214, J2222	B. Wilson 500/115kV transformer #1
Fault 6	Ray Braswell -Franklin 500 kV	3 PH	5	J2404, J2408, J4914, J4944	Ray Braswell -Franklin 500kV
Fault 7	Ray Braswell -Lakeover 500 kV	3 PH	5	J4928, J4908, J9218, J9234	Ray Braswell -Lakeover 500kV
Fault 8	Ray Braswell - B. Wilson 500 kV	3 PH	5	J4928, J4920, J2230, J2233	Ray Braswell - B. Wilson 500kV
Fault 9	Ray Braswell 500/115 kV Transformer #1	3 PH	5	J4904, J4917	Ray Braswell 500/115kV Transformer #1
Fault 10	Ray Braswell 500/230kV Transformer #1	3 PH	5	J4914, J4952	Ray Braswell 500/230kV Transformer #1

TABLE 8.2-4: SYSTEM STABILITY STUDIES (CONTINUED)

Fault Cases in this Study: 3 Phase faults simulated for stability analysis					
CASE	**LOCATION**	**TYPE**	**CLEARING TIME (cycles)**	**BREAKER TRIP #**	**TRIPPED FACILITIES ?**
Fault 11	Franklin - McKnight 500kV	3 PH	5	BRK#21105, BRK#21110, J2416, J2412	Franklin - McKnight 500kV
Fault 12	Franklin - Bogal USA - Adams Creek 500kV	3 PH	5	S4402, S4405,S7569 J2416, J2420	Franklin - Bogal USA - Adams Creek 500kV
Fault 13	Franklin - Ray Braswell 500kV	3 PH	5	J2404, J2408, J4914, J4944	Franklin - Ray Braswell 500kV
Fault 14	Franklin - G. Gulf 500kV	3 PH	5	J2425, J2420, J5248, J5240	Franklin - G. Gulf 500kV
Fault 15	Franklin 500/115kV transformer #1	3 PH	5	J2425, J2404	Franklin 500/115kV transformer #1

TABLE 8.2-4: DELETED

TABLE 8.2-4: DELETED

TABLE 8.2-4: DELETED

TABLE 8.2-4: DELETED

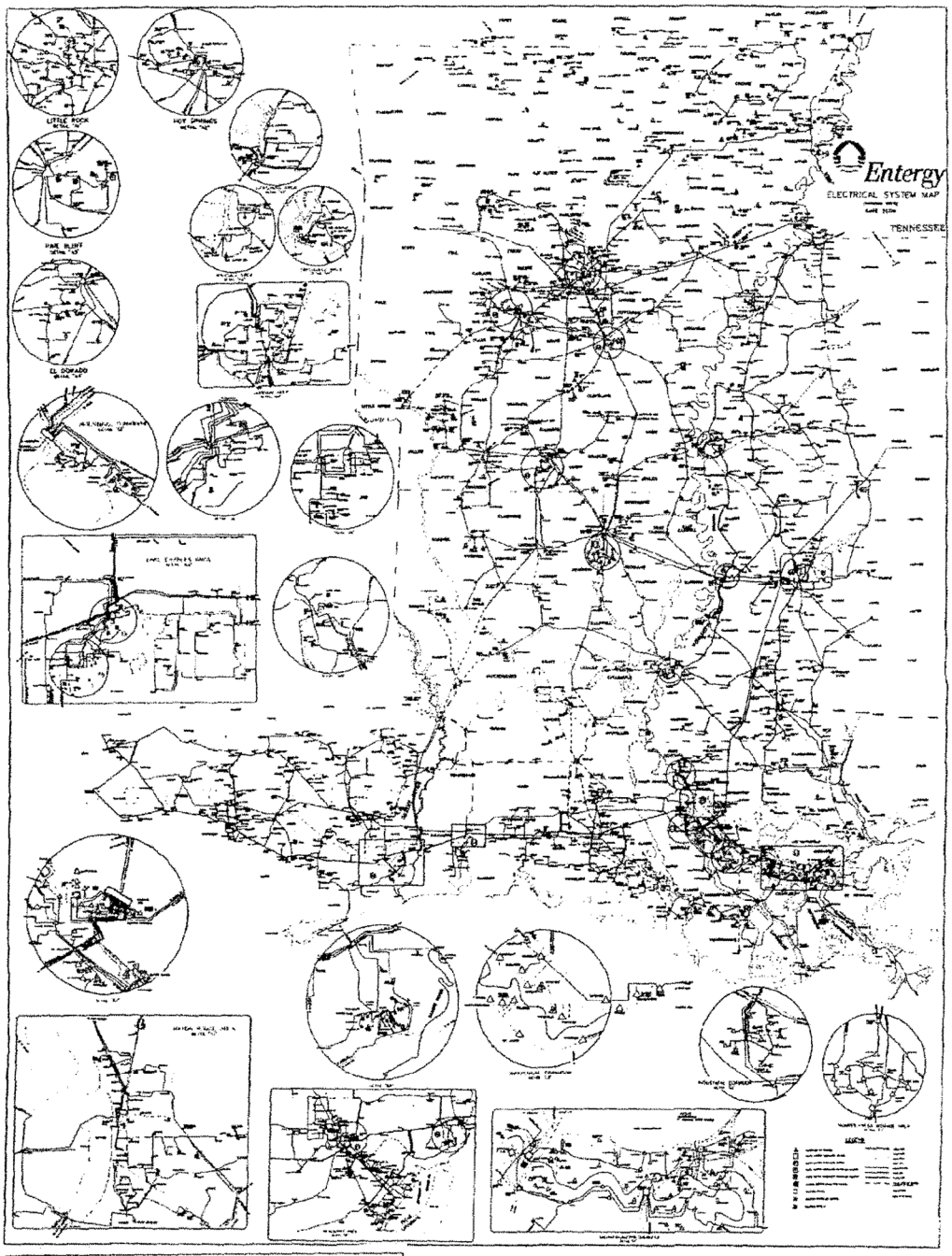

GRAND GULF NUCLEAR STATION
UNIT 1
UPDATED FINAL SAFETY ANALYSIS REPORT

ENTERGY ELECTRICAL SYSTEM

FIGURE 8.2-001

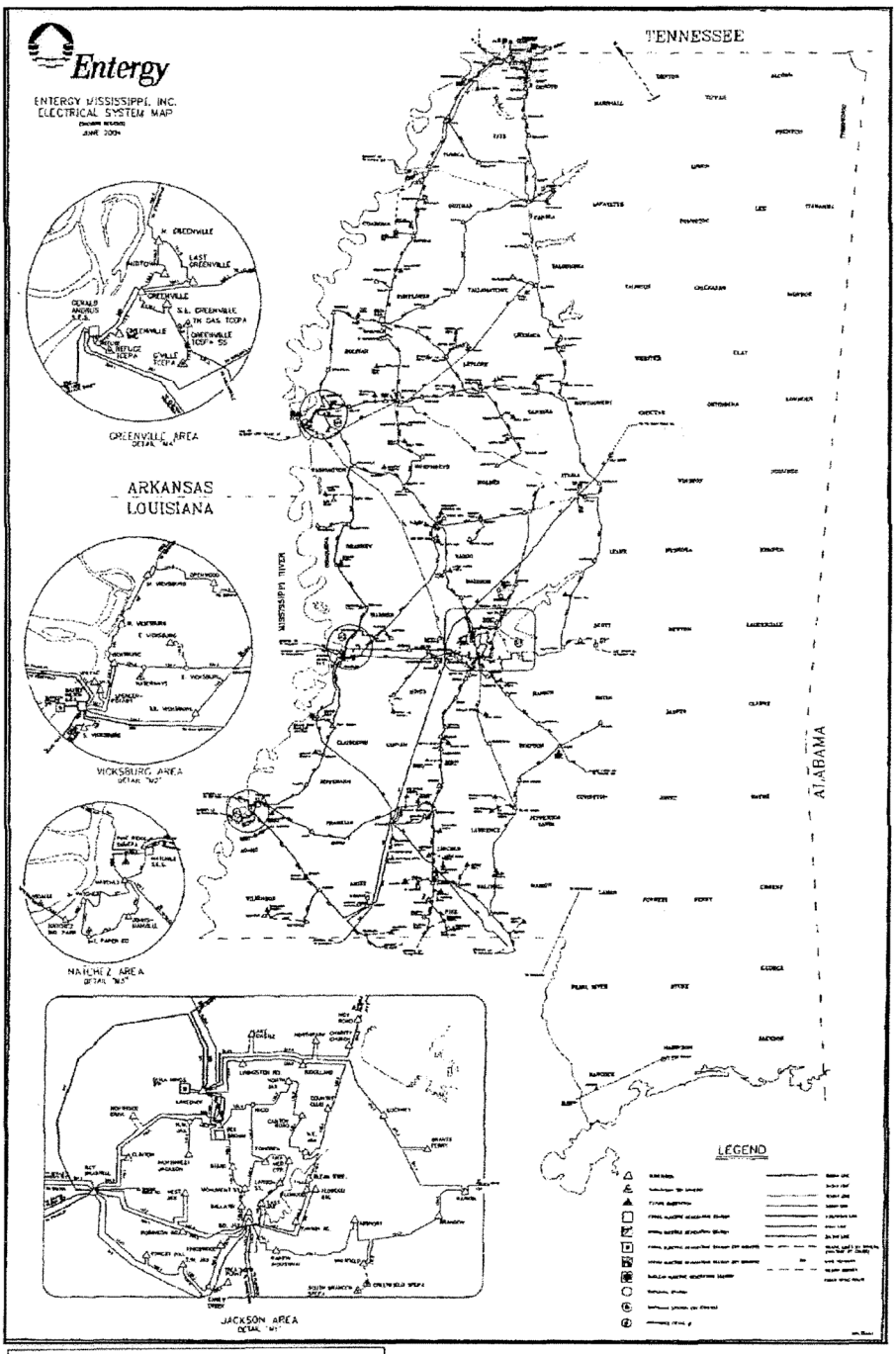

GRAND GULF NUCLEAR STATION
UNIT 1
UPDATED FINAL SAFETY ANALYSIS REPORT

MISSISSIPPI POWER & LIGHT
ELECTRICAL SYSTEM MAP

FIGURE 8.2-002

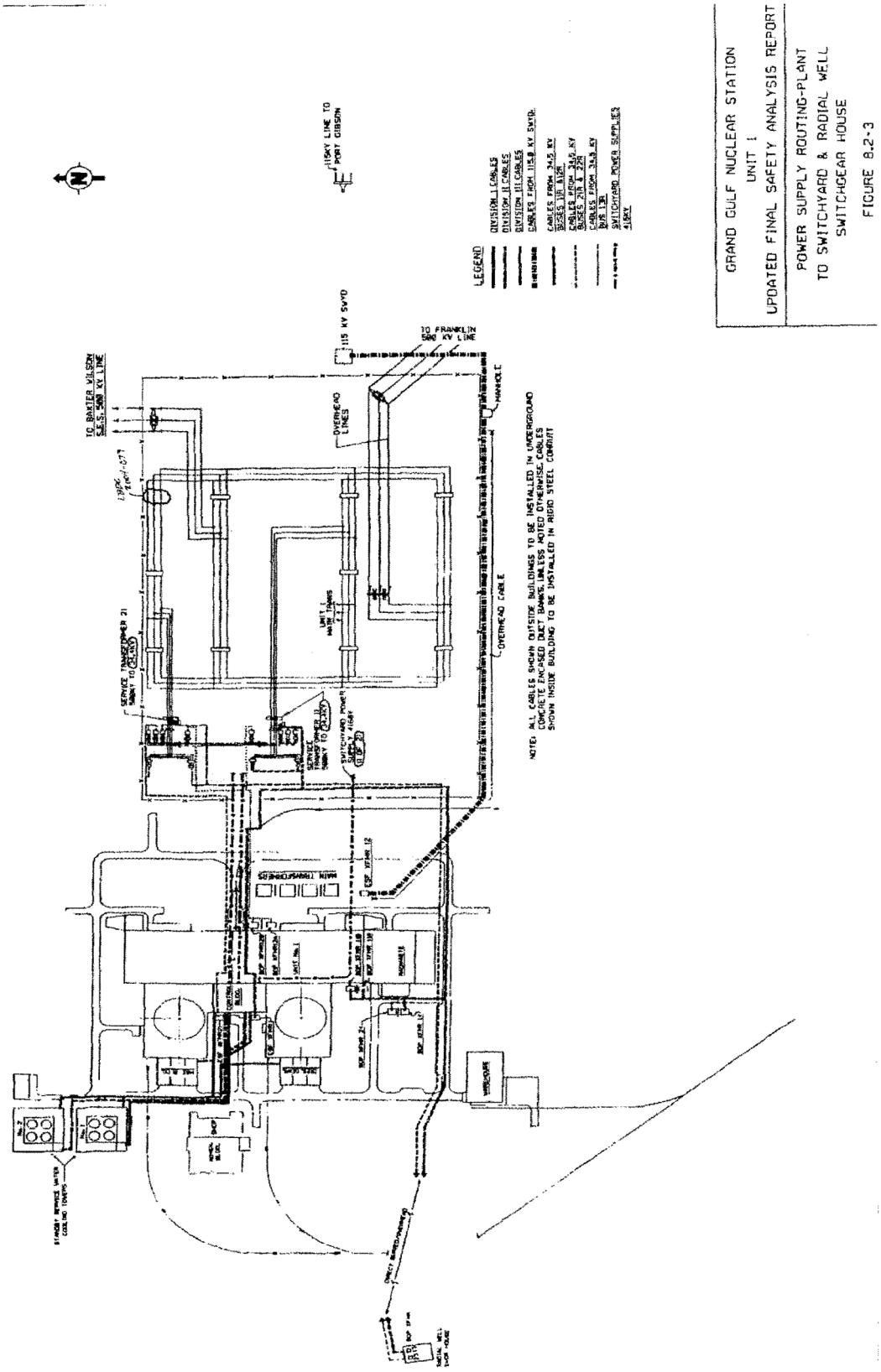
GRAND GULF NUCLEAR STATION
UNIT 1
UPDATED FINAL SAFETY ANALYSIS REPORT
POWER SUPPLY ROUTING-PLANT
TO SWITCHYARD & RADIAL WELL
SWITCHGEAR HOUSE
FIGURE 8.2-3
LEGEND
DIVISION I CABLES
DIVISION II CABLES
DIVISION III CABLES
CABLES FROM 115.8 KV SWYD.
CABLES FROM 24.5 KV BUSES 1B, 1D
CABLES FROM 24.5 KV BUSES 2B & 2D
CABLES FROM 34.5 KV BUS 1B
SWITCHYARD POWER SUPPLIES 4.16KV
115KV LINE TO PORT GIBSON
115 KV SWYD
TO FRANKLIN 500 KV LINE
TO BAXTER WILSON S.E.S. 500 KV LINE
OVERHEAD LINES
HANDHOLE
OVERHEAD CABLE
UNIT 1 MAIN TRANS
SERVICE TRANSFORMER 21
SWITCHYARD POWER SUPPLIES 4.16KV
NOTE: ALL CABLES SHOWN OUTSIDE BUILDINGS TO BE INSTALLED IN UNDERGROUND CONCRETE ENCASED DUCT BANKS, UNLESS NOTED OTHERWISE. CABLES SHOWN INSIDE BUILDING TO BE INSTALLED IN RIGID STEEL CONDUIT
MAIN TRANSFORMERS
STANDBY SERVICE WATER COOLING TOWERS
RADIAL WELL PUMP HOUSE

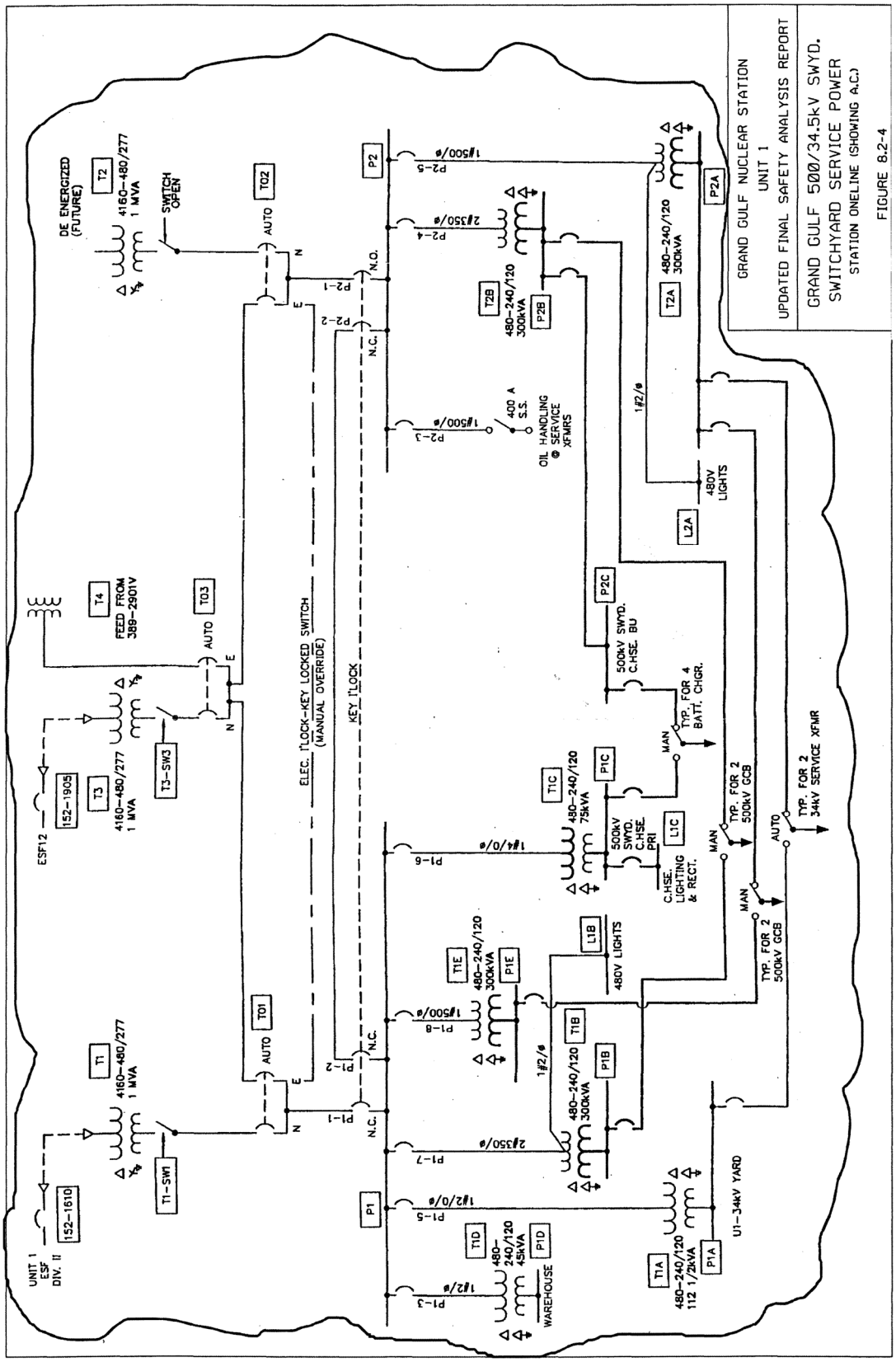
GRAND GULF NUCLEAR STATION
UNIT 1
UPDATED FINAL SAFETY ANALYSIS REPORT
GRAND GULF 500/34.5kV SWYD.
SWITCHYARD SERVICE POWER
STATION ONELINE (SHOWING A.C.)
FIGURE 8.2-4
DE ENERGIZED (FUTURE)
T2
4160-480/277
1 MVA
SWITCH OPEN
T02
AUTO
P2
P2-5
1#500/ø
P2-4
2#350/ø
P2-1
P2-2
N.C.
T2B
480-240/120
300kVA
P2B
P2A
T2A
480-240/120
300kVA
P2-3
400 A
S.S.
OIL HANDLING
@ SERVICE
XFMRS
1#2/ø
480V
LIGHTS
L2A
T4
FEED FROM
388-290TV
T03
P2C
500kV SWYD.
C.HSE. BU
TYP. FOR 4
BATT. CHGR.
MAN
ELEC. I'LOCK-KEY LOCKED SWITCH
(MANUAL OVERRIDE)
KEY I'LOCK
T3
4160-480/277
1 MVA
T3-SW3
ESF12
152-1905
T1C
480-240/120
75kVA
P1C
500kV
SWYD.
C.HSE.
PRI
L1C
C.HSE.
LIGHTING
& RECT.
TYP. FOR 2
500kV GCB
TYP. FOR 2
34kV SERVICE XFMR
P1-6
1#4/0/ø
T1E
480-240/120
300kVA
P1E
L1B
480V LIGHTS
P1-8
1#500/ø
T1B
P1B
T01
T1
4160-480/277
1 MVA
P1-2
P1-1
T1-SW1
152-1610
UNIT 1
ESF
DIV. II
P1-7
2#350/ø
P1
P1-5
1#2/0/ø
T1D
480-
240/120
45kVA
P1D
WAREHOUSE
P1-3
1#2/ø
T1A
480-240/120
112 1/2kVA
P1A
U1-34kV YARD

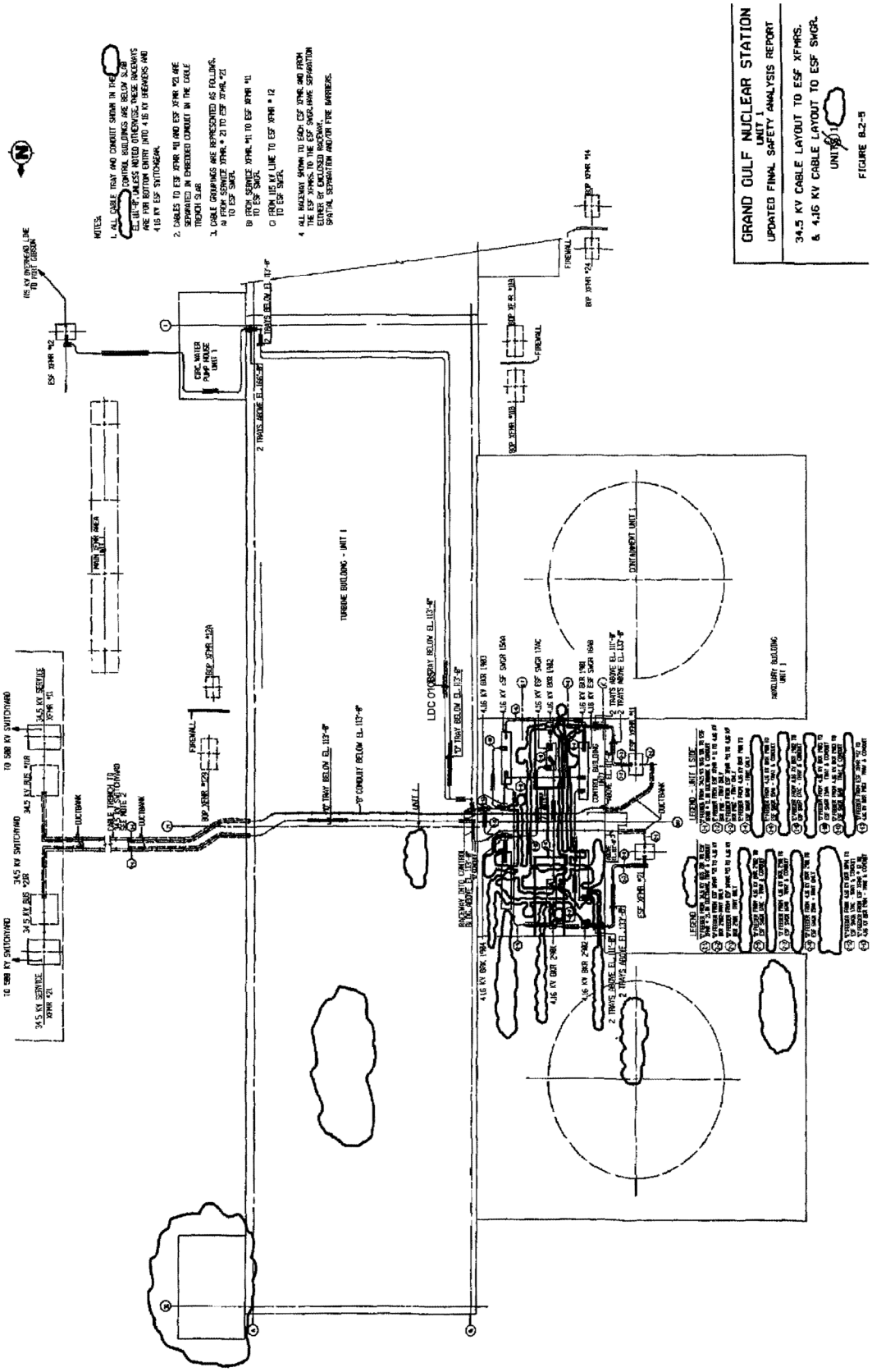
GRAND GULF NUCLEAR STATION
UNIT 1
UPDATED FINAL SAFETY ANALYSIS REPORT
34.5 KV CABLE LAYOUT TO ESF XFMRS.
& 4.16 KV CABLE LAYOUT TO ESF SWGR.
UNIT 1
FIGURE 8.2-5
NOTES:
1. ALL CABLE TRAY AND CONDUIT SHOWN IN THE CONTROL BUILDINGS ARE BELOW SLAB EL 112'-6" UNLESS NOTED OTHERWISE. THESE RACEWAYS ARE FOR BOTTOM ENTRY INTO 4.16 KV BREAKERS AND 4.16 KV ESF SWITCHGEAR.
2. CABLES TO ESF XFMR #1 AND ESF XFMR #2 ARE SEPARATED IN ENCLOSED CONDUIT IN THE CABLE TRAY SLAB.
3. CABLE GROUPINGS ARE REPRESENTED AS FOLLOWS.
A) FROM SERVICE XFMR #1 TO ESF XFMR #21 TO ESF SWGR.
B) FROM SERVICE XFMR #1 TO ESF XFMR #1 TO ESF SWGR.
C) FROM 115 KV LINE TO ESF XFMR #12 TO ESF SWGR.
4. ALL RACEWAY SHOWN TO EACH CSF XFMR AND FROM THE ESF XFMRS TO THE ESF SWGR HAVE SEPARATION EITHER BY ENCLOSED RACEWAY, SPATIAL SEPARATION AND/OR FIRE BARRIERS.
TURBINE BUILDING - UNIT 1
CONTAINMENT UNIT 1
AUXILIARY BUILDING UNIT 1
CONTROL BUILDING
LDC OVERWAY BELOW EL 112'-6"
FIREWALL
TO 500 KV SWITCHYARD
345 KV SWITCHYARD
345 KV SERVICE XFMR #21
345 KV BUS #1XR
345 KV BUS #2XR
DUCTBANK
LEGEND - UNIT 1 SIDE

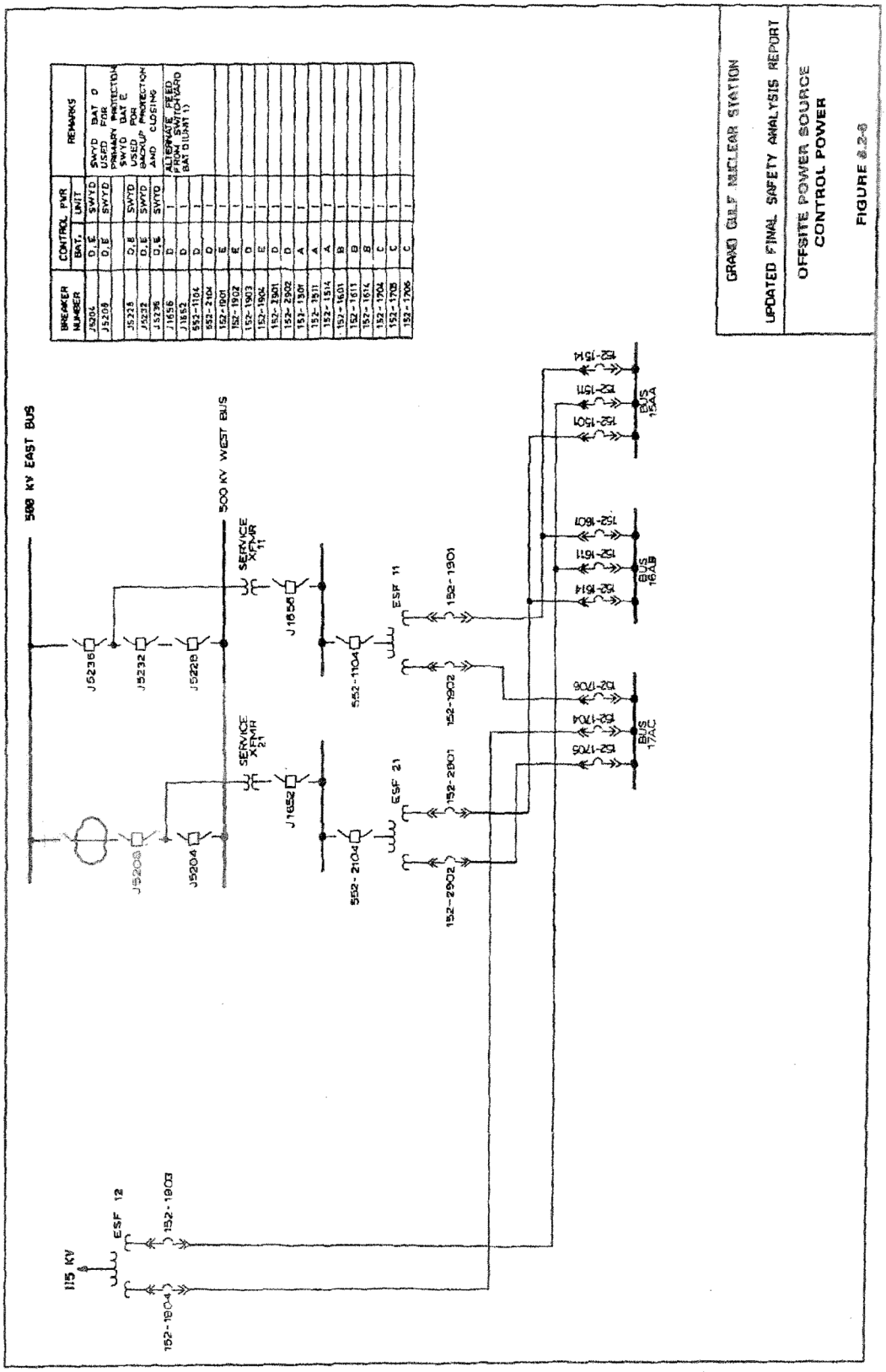

BREAKER NUMBER	CONTROL PWR BAT.	CONTROL PWR UNIT	REMARKS
J5204	D,E	SWYD	SWYD BAT D
J5203	D,E	SWYD	USED FOR PRIMARY PROTECTION
J5236	D,E	SWYD	SWYD BAT E
J5232	D,E	SWYD	USED FOR BACKUP PROTECTION
J5228	D,E	SWYD	AND CLOSING
J16656	D	I	ALTERNATE FEED FROM SWITCHBOARD BAT D(UNIT 1)
J16652	D	I	
552-1104	D	I	
552-2104	D	I	
152-1901	E	I	
152-1902	E	I	
152-1903	D	I	
152-1904	E	I	
152-2901	D	I	
152-2902	D	I	
152-1501	A	I	
152-1511	A	I	
152-1514	A	I	
152-1601	B	I	
152-1611	B	I	
152-1614	B	I	
152-1704	C	I	
152-1705	C	I	
152-1706	C	I	

8.3 ONSITE POWER SYSTEMS

8.3.1 AC Power Systems

8.3.1.1 Description

Onsite ac power is supplied from the switchyard through service transformers which feed BOP and ESF transformers. BOP ac power is distributed at 13.8 kV, 6.9 kV, 4.16 kV, and 0.48 kV, while ac power supplies (Class IE) to ESF buses are 4.16 kV and 0.48 kV. Bus arrangement and main BOP loads are shown on Figure 8.1-1.

The ESF loads are divided into three divisions, each fed from an independent ESF bus. Each of three ESF transformers has two independent secondary windings. One secondary winding of each ESF transformer can only supply Division 3 ESF loads. The other secondary winding of each ESF transformer can only supply Division 1 and/or Division 2 ESF loads. During normal operation Division 1 and Division 2 ESF loads are normally supplied from separate ESF transformers. In addition the Division 1 Low Pressure Core Spray and Division 3 High Pressure Core Spray Systems are normally supplied from separate ESF transformers.

Selected non-Class IE loads, as identified in Tables 8.3-10 and 8.3-11, are connected to the Class IE ac system. For the reasons listed below, these loads are connected to Class IE buses so that electric power can be supplied to them in case of loss of offsite power:

a. To preclude potential equipment damage

b. To provide additional operational flexibility (such as to enable the operator to maintain the instrument air supply or the power to certain nonessential instrumentation)

c. To meet recommendations by the NSSS vendor

As shown in Tables 8.3-10 and 8.3-11, these loads are isolated from the Class IE ac system either by being shed and locked out due to a LOCA signal (some of them can be reconnected manually) or through the use of two Class IE breakers in series.

An alternate source of ac power for each ESF bus is the associated diesel generator which will automatically start in case of a loss of preferred power source. Each 4.16 kV ESF bus feeds its associated 480 volt load center buses through 4.16 kV/480 V load

center transformers. The load center buses provide power for motor control centers and other 480 volt safety loads. An independent 125 volt dc system, supplying power for the control of the ac power system equipment, is provided for each division.

8.3.1.1.1 Class IE AC Power System and Identification

The Class IE ac power system is the power source used in (or associated with) shutting down the reactor and preventing or limiting the release of radioactive material following a design basis event. The system is divided into three independent divisions which are identified by distinct means. Each division identification is consistent throughout the plant. The three divisions are identified as follows:

a. Division 1 - yellow

b. Division 2 - blue

c. Division 3 - green

The delineation of Class IE ac power system divisions and the associated engineered safety features switchgears, load centers, and motor control centers are shown on Figure 8.1-1. This equipment is located in seismic Category I structures. For equipment and cable tray separation, criteria, and markings of cable and associated trays see subsections 8.3.1.2.3 and 8.3.1.4.

8.3.1.1.2 Power Sources for Class IE AC Power System

8.3.1.1.2.1 Offsite Source

[HISTORICAL INFORMATION] [The offsite ac power source to the 500 kV switchyard is from two 500 kV lines from the system grid. From the switchyard, two 500 kV circuits are provided, each feeding a service transformer capable of supplying necessary ac power to the Class IE and BOP electric systems. In addition, one 115 kV offsite circuit is provided which feeds a 115/4.16 kV ESF transformer located adjacent to the plant.

[HISTORICAL INFORMATION] [The ac power sources to the Class IE electric systems are the ESF transformers; each is capable of supplying ac power to start and run the ESF loads required due to a LOCA.]

8.3.1.1.2.2 Onsite Sources

[HISTORICAL INFORMATION] [The onsite power source of each engineered safety features bus is the diesel generator connected exclusively to the bus. The diesel generator starts automatically on a LOCA signal and following the loss of the offsite power source feeding the engineered safety features bus.] On Divisions 1 and 2, prior to connecting the diesel generator to its appropriate bus, all loads are shed except load center feeders and those MCCs which feed Class IE loads. Upon reaching rated voltage and frequency, the diesel generators are then connected to their respective bus. Loads are then sequentially connected to the bus by the automatic sequencer after the diesel generator has reached full voltage and frequency and has been connected to the bus. In the event that one offsite power source becomes available during the above-mentioned mode of operation, the operator can transfer the engineered safety features buses to the offsite source by synchronizing, paralleling with the offsite system, and tripping the diesel generator breaker. Not more than one bus at a time is allowed to be transferred.

Provisions are built into the automatic sequences to recognize a grid undervoltage condition and to automatically place the diesel generator on the bus after tripping the incoming offsite source breaker to the ESF bus, when the bus voltage due to any offsite source is 90 or 70 percent for a predetermined time interval.

Each sequencer has three sets of bistable devices which monitor voltage at the ESF bus of its safety division. Each set of bistables is arranged in a one-out-of-two twice logic. A measured nominal voltage of less than 70 percent for 0.5 second indicates unacceptable degradation (total loss) of the preferred source that is connected to the bus. The sequencer will then function as described in subsection 8.3.1.1.3(b).

The second set is arranged to act upon observing a nominal bus voltage between 70 percent and 90 percent for 9 seconds when the bus is connected to an offsite (preferred) source. This is interpreted as a severe degradation of the entire grid since automatic relaying on the network would normally restore nominal voltage in much less than 9 seconds if the transmission system were manageable. In this case all preferred sources are disconnected and the safety buses placed on onsite power.

The 90 percent bus voltage setpoint and 9-second time delay of the sensors used to detect a degraded system voltage condition were selected to:

a. Override the effects of short-duration system disturbances as well as the effects of transients due to the starting of large motors fed from the plant distribution system.

b. Preclude damage to electrical equipment as a result of extended periods of operation at reduced voltage levels.

The 9-second delay is consistent with accident analyses. After this time delay the diesel generator receives a start signal and the emergency buses are disconnected from the offsite power sources. The buses are reconnected to the onsite power sources upon the diesels obtaining rated voltage and frequency. [HISTORICAL INFORMATION] [Should a LOCA signal be received at any point during this 9-second time delay, the diesel generators will be given a start signal. In the case of a coincident degraded system voltage condition and LOCA signal, the time delay between detection of the degraded system voltage and reestablishment of the power to the emergency buses via the onsite power sources is a function of the starting time of the diesel generators. The diesel starting time is therefore the limiting condition utilized in the accident analysis.]

The third set of bistables is actuated by the presence of a LOCA signal with an observed bus voltage of 80 percent, or less, for 0.5 seconds. The outputs from this circuit are not utilized.

8.3.1.1.2.3 Control Power and Circuit Protection

[HISTORICAL INFORMATION] [All air and oil circuit breakers at and above 480 volts are 125 volt dc controlled whether used in Class IE or BOP applications. Subsection 8.3.2 discusses how each division of Class IE and BOP circuit breaker control circuitry is provided with separate and redundant dc control power.

Class IE and critical BOP control is likewise 125 volt dc because of the inherent reliability of dc control and station batteries.

Instrumentation and control circuits employed in Class IE applications are selected and routed using the criteria in Regulatory Guide 1.75. Color coding of cables follows subsection 8.3.1.2.3 and raceways are installed as described in subsection 8.3.1.4.

Protective devices employed in ESF Divisions 1 and 2 are shown in Figure 8.3-1. Division 3 protective devices are discussed in subsection 8.3.1.1.4.2.10 and shown on Figure 8.3-12a.

A complete analysis of the application and coordination of the protective devices on Class IE distribution has been conducted. This analysis shows that under design operation of these devices, faults and undervoltages will be detected and corrected at the lowest level of distribution. Redundant installations are provided for critical applications. For example, the ATWS trips to the recirculation pump breakers use redundant tripping mechanisms with independent dc control sources.

Protective devices of Class IE systems, particularly the ECCS, are set to maintain continuity of power as long as possible short of causing a derangement of the equipment.]

8.3.1.1.2.4 Testability

Utilizing mechanical system features, such as test bypass piping, Class IE electrical equipment will be periodically tested during power operations under load conditions approximating actual DBA conditions. The frequency and duration of this testing is covered by the Technical Specifications.

An operational note explaining the consequence of light load and no load operation is contained in the station operating and surveillance procedures. Light load and no load operations will generally not be performed except to obtain results unique to engine operation.

[HISTORICAL INFORMATION] [Full load carrying capability testing of the Grand Gulf Nuclear Station Unit 1, Division I and II standby diesel generators, as recommended in the Darrell G. Eisenhut, Director, Division of Licensing (NRC) letter of August 15, 1984 to J. B. George, Chairman, Transamerica Delaval Inc. (TDI) Owners Group has been limited to a load less than that which corresponds to 185 psig Brake Mean Effective Pressure (BMEP).] Periodic testing of the GGNS Unit 1, Division I and II standby diesel generator is performed at a load greater than or equal to 5450 kW but not to exceed 5740 kW.

The surveillance test frequency stated in the Technical Specifications provides adequate assurance of diesel generator availability without causing degradation due to excessive engine starts. The determination of valid failures on a per diesel

generator basis reflects that failures on one diesel generator do not necessarily reflect the same problem on the remaining diesel generators.

To ensure that the performance during preoperational testing adequately proved the design performance intended, analytical comparisons were made. Voltage tap settings of intervening transformers have been set to yield optimum voltage levels of the emergency buses for the full load and minimum load conditions expected throughout the anticipated voltage variations of the offsite power source. The adequacy of these tap settings have been verified by actual measurement and these measurements were correlated with predicted analytical results.]

Technical Specifications and test procedures were approved and issued to verify the adequate performance of the integrated onsite power system prior to initial reactor power operations. This testing is described in Section 14.2.

8.3.1.1.2.5 Shared Systems

In December of 1979 construction of Grand Gulf Unit 2 (NRC Docket Number 50-417) was deferred in order to concentrate resources on the completion of Unit 1. After Unit 1 had received its Commercial Operating License, Entergy Operations, Inc. formally requested the NRC to revoke the Construction Permit and officially cancel the second unit at the Grand Gulf Nuclear Station. The Construction Permit for Grand Gulf Unit 2 was revoked by the NRC in August 1991 Therefore, there are no shared systems or equipment within the boundaries of the Class 1E electrical systems.

8.3.1.1.2.6 Undervoltage Protection

Divisions I and II

[HISTORICAL INFORMATION] [Undervoltage protection is provided via separate bistables which are set to operate independently at approximately 73 percent of motor-rated voltage (70 percent of nominal bus voltage) after a 1/ 2-second time delay and at 94 percent of motor-rated voltage (90 percent of nominal bus voltage) after a 9-second time delay. With these set points the worst case would be if there was an applied motor voltage of slightly over 73 percent nominal. This voltage level would exist for the 9 seconds necessary to activate the 90 percent undervoltage trip. As explained in the following sections, even this worst case situation will not be detrimental to the safe operation of the plant.

Major plant electrical loads consist of motors, heating coils for plant HVAC, battery chargers, and lighting.

Motors

All Class IE motors in the plant are suitable for satisfactory starting at 80 percent (or less) of nameplate voltage, running at 90 percent voltage and have a safe stall time of 10 seconds or more at rated voltage. Since the safe stall time of a motor is inversely proportional to the square of the applied voltage, operation at a reduced voltage level will result in a corresponding increase in safe stall time. Therefore, undervoltage will not result in any thermal damage to the motors since the undervoltage trip will be actuated before the safe stall time is exceeded. In addition, all motors (except MOV motors for which overload devices are bypassed during normal operation) have overload protection to prevent thermal damage to the motors.

Heating Coils

The current, which is drawn by heating coils, is directly proportional to the voltage applied. Application of lower than normal voltage will not result in thermal damage to these devices since the current would be decreased proportionally with the applied voltage.

Battery Chargers

Battery chargers are high reactance nonlinear devices with output and input current falling rapidly at lower voltages. he only effect of the application of a lower voltage will be a reduction in output from the chargers. No thermal or other damage will occur.

Lighting

Voltage below 80 percent can cause the lights to go out, but they will recover as soon as voltage recovers. No damage to the lighting equipment will occur.

HPCS

The HPCS power supply system is capable of operating continuously at rated voltage ±10 percent. The equipment can also operate at a degraded voltage to within ±30 percent of rated voltage for 60 seconds without exceeding the manufacturer's design temperature

limit. When operated from the HPCS diesel generator, the maximum degraded voltage variation is between 55 percent and 130 percent of rated voltage for 10 seconds maximum. Since the HPCS power supply system provides power to mitigate the consequences of a postulated LOCA, further undervoltage protection is deemed not desirable.

The dc equipment can operate within the voltage range of 105-140 V dc without any thermal damage.]

8.3.1.1.3 Load Shedding and Sequencing on ESF Buses

This section addresses only ESF Divisions 1 and 2.

[HISTORICAL INFORMATION] [Load shedding and sequencing on an ESF bus is utilized during a LOCA and a condition of bus undervoltage, either existing singly or occurring together.

The load shedding and sequencing is performed by redundant (one per ESF division) load shedding and sequencing panels. These are highly reliable, solid-state logic boards fully qualified and tested to the criteria identified in subsection 8.1.4.2. The complete logic diagram for the operation of shedding/ sequencing is shown on Figure 8.3-9 The description of its operation is as follows.

a. LOCA

The existence of the LOCA condition is signalled by redundant 1X2 twice sensor circuits originating in NSSS equipment. This is the same signal which initiates the ESF and emergency core cooling provisions described in subsection 8.1.3.

The first action after receipt of the LOCA signal removes all loads from the ESF buses at the highest (4,160 volts) voltage level except the feeders to the 480 volt load centers. At the load center level, all feeders are tripped except those supplying power to motor control centers (MCCs) feeding Class IE loads.

This ensures maximum retention of plant protection systems and minimizes delay in placing the ECCS in the proper lineup for core cooling.

The timing sequence for ECCS is the same regardless of whether the ESF buses are energized from offsite or onsite power. This makes the LOCA sequencing a function solely of when ESF bus voltage becomes available without memory of past conditions or knowledge of the present power source. When the necessary and sufficient condition of bus voltage is obtained, the sequencing logic applies the ECCS/ESF loads.

Should the bus voltage (offsite source) be lost during post-accident operation, the standby diesel generator is actuated, and load shedding will occur as described below. Once voltage is restored, the LOCA sequencing procedure will repeat itself with respect to starting motor loads.

At all times when a LOCA signal is present, the LSS panels are blocked from accepting either a manual or automatic reset command. This ensures that the sequencer operation under accident conditions will not be compromised by receipt of either inadvertent or inappropriate operator inputs.

b. Loss of Preferred Power Source

Redundant bus undervoltage bistables set to actuate upon experiencing 70-percent voltage for 0.5 second or 90-percent voltage for 9 seconds will signal loss of the preferred power to the ESF buses. The 70-percent signal is the primary level of voltage protection and the 90-percent signal is the secondary level. When this signal is initiated in the sequencing panel, it will automatically trip all incoming and motor feeder breakers except those to the load centers and Class IE motor control centers previously defined in the LOCA description.]

The load shedding and sequencing system does not prevent load shedding of the emergency buses in response to a Bus Under Voltage (BUV) or a LOCA signal once the onsite sources are supplying power to all sequenced loads on the buses. The rationale for not inhibiting the load shedding feature is as follows:

a. [HISTORICAL INFORMATION] [Should the onsite power supplies be connected to the emergency buses as a result of a loss of offsite power or a degraded system voltage condition, it is necessary to resequence the loads on the emergency buses if a subsequent accident signal is received. This resequencing

is required to ensure the proper sequential loading of the diesel generators with the accident loads as well as to trip and lockout any non-Class IE associated loads that may have been connected to the buses.

b. The presence of a Bus Under Voltage (BUV) signal is indicative of either a failure of the onsite power sources or the tripping of the onsite power source breakers. Either condition dictates connection of the standby diesel generator to the emergency buses followed by resequencing of the emergency loads. The set point of the loss of preferred power voltage sensors at 70 percent bus voltage with a 0.5-second time delay is intended to prevent false load shedding due either to short-duration transients or the effects of starting large motors on the emergency buses.

   The Technical Specification will contain maximum and minimum allowable values for voltage set points and time delays, limiting conditions for operation, and surveillance requirements.

Either of the two situations, LOCA or Bus Under Voltage (BUV), will result in starting of the diesel generator. If an offsite source is available and utilized, the diesel can be manually stopped by the operator. If no offsite source is available, the diesel will be automatically connected to the bus by the sequencing logic panel after the generator rated frequency and voltage are obtained and all other incoming breakers are open. This requires 10 seconds maximum after receipt of the diesel engine start signal.

The sequencing logic controls the permissive and starting signals to motor feeder breakers so as to positively prevent an overburden on any power source by automatic load application. The design of Grand Gulf ESF and ECCS is such that redundant motors are automatically started by a LOCA signal.]

The list of loads required for various modes and the time of their sequential application are given in Table 8.3-4. Load shedding and sequencing logic are shown on Figure 8.3-9.

8.3.1.1.4 Standby Power Supply

8.3.1.1.4.1 General and Diesel Generator Sets 11 and 12

a. Feeder and Busing Arrangement

[HISTORICAL INFORMATION] [Each of the three divisions of the Class IE electric systems has its own diesel generator set as a standby ac power source. When offsite power is not available, the three diesel generators are automatically connected to their associated ESF buses which feed various ESF and other loads. Diesel generator sets for Unit 1 are identified as:

(1) Set 11 for ESF bus 15AA-Division 1

(2) Set 12 for ESF bus 16AB-Division 2

(3) Set 13 for ESF (HPCS) bus 17AC-Division 3

b. Interconnections between Feeders or Buses and Manual or Automatic Transfers

Each redundant standby power system division, including the diesel generator, its auxiliary systems, and the distribution of power to various safety features loads through the 4.16 kV and 480 volt systems, is segregated and separated from every other system division and no interconnections are provided between the various ESF divisions. Each diesel generator unit is operated independently of the other units and is, except during tests, disconnected from the utility power system.]

c. Criteria for Diesel Generator Sizing

Ratings for diesel generator sets 11 and 12 satisfy the requirements set forth in Regulatory Guide 1.9, Rev. 3 with the following exceptions. Divisions 1 and 2 are fed by diesel generator sets 11 and 12, respectively.

The individual loads were determined on the basis of nameplate rating, pump pressure and flow conditions, or pump runout conditions, depending on information available. Diesel Generators sets 11 and 12 load testing requirements at a maximum of (7000 kw) was reduced to a maximum of (5740 kw) per NRC request letter dated July 17,

1984 (MAEC-84/0267). This resulted in a change to the Technical Specifications operability surveillance requirements for load testing. Tech Spec changes were submitted via letter dated July 20, 1984 (AECM-84/0374) to require verification of loading at ≥ 5450 kw and ≤ 5740 kw.

Also MAEC-84/0267 resulted in a requirement to avoid unnecessary loading above 5740 kw. The lower value of 5450 kw defined by AECM-84/0374 corresponds to approximately 78% of the continuous rating of the diesel generators and is greater than the auto-connected loads required for the loss of offsite power and post-LOCA conditions in accordance with Technical Specifications.

d. Starting Circuits and Systems

[HISTORICAL INFORMATION] [Diesel generator sets 11 and 12 start automatically on loss of offsite power, low-water level in the reactor, or high drywell pressure. Undervoltage bistables are used to start each engineered safety feature bus diesel engine in the event of a drop in bus voltage below preset values for a predetermined period of time. Two low-water-level switches with two drywell high-pressure switches in the Division 1 logic and two other low-water-level switches with two other drywell high-pressure switches in the Division 2 logic initiate starts of their respective division's diesel engine under accident conditions. One- out-of-two-taken-twice logic, a combination of low water level and high drywell pressure seen within a division's logic, generates the start signal for that division's diesel engine. The transfer of the engineered safety features buses to the standby supply is automatically initiated on loss of the offsite power source. The diesel generator breaker is closed when required generator voltage and frequency are established, after the breakers connecting the buses to the offsite sources are open and all the bus loads except the engineered safety features 480 volt load center feeders are tripped.

Diesel generator sets 11 and 12 are designed to start and attain rated voltage and frequency within 10 seconds. The generator, exciter, and voltage regulator are designed to permit the unit to accept the load and to accelerate the motors in the sequence and the time requirements listed in

Table 8.3-4.] The voltage drop caused by starting large motors does not exceed the requirement as set forth in Regulatory Guide 1.9, Rev. 3 so that proper acceleration of these motors is ensured. Control and timing circuits are provided to ensure that each load is applied automatically at the correct time (as shown in Tables 8.3-4 and 6.3-1). Each diesel generator set is provided with an independent starting air system.

A detailed discussion of the diesel air start system is presented in subsection 9.5.6.

Starting logic for the diesel generators is shown on Figure 8.3-8 and 8.3-8a.

e. Automatic Loading and Stripping

[HISTORICAL INFORMATION] [The diesel generator is automatically connected to its ESF bus following a loss of the preferred power source and when all incoming source breakers have been tripped, as described in subsection 8.3.1.1.3 The same signal that initiates the breaker tripping also causes all loads to be stripped from the 4.16 kV ESF bus, except for the ESF 480 volt load center feeders.

The required loads are later applied sequentially to the bus after closing of the diesel generator breaker.]

f. Protection Systems

(1) The diesel generator is rendered incapable of responding to an emergency auto start signal by the following conditions:

(a) Generator breaker lockout relay(s) tripped

(b) Generator breaker not in operate position

(c) Generator breaker loss of control power

(d) Diesel control panel loss of control power

(e) Loss of power to protective relays

(f) Starting air pressure below 120 psi

(g) Deleted

(h) Deleted

(i) Deleted

(j) Diesel in the maintenance mode (includes barring device engaged)

(k) Overspeed trip (not bypassed in accident mode)

(l) Deleted

(m) Deleted

(n) Deleted

(2) The diesel generator is shut down and the diesel generator breaker tripped under the following conditions during emergency operation:

(a) Engine overspeed

(b) Deleted

(c) Deleted

(d) Generator differential

(e) Deleted

(f) Deleted

(3) The diesel generator breaker is tripped under the following conditions during testing:

(a) Generator voltage controlled overcurrent

(b) Generator underfrequency, only if operating in parallel with offsite power sources

(c) LOCA, LOP, or Bus Undervoltage signal from the Load Shedding and Sequencing system if operating in parallel with offsite power sources

(d) Placing the PARALLEL CONTROL DIESEL GENERATOR 12 switch in RESET while operating in parallel with offsite power sources

(e) Loss of rated speed or voltage while in parallel with offsite power sources

(4) In addition to the conditions listed as trips during emergency operation, during diesel generator testing, the diesel generator will be shut down, and the diesel generator breaker will be tripped, due to:

(a) High jacket water temperature trip

(b) Engine bearing temperature high trip

(c) Generator loss of excitation (while operating in parallel with offsite power) trip

(d) Reverse power relay operation (while operating in parallel with offsite power) trip

(e) Trip low turbo oil pressure

(f) Deleted

(g) Trip high temp. lube oil

(h) Local stop/run valve engaged

(i) Manual - local or remote stop

(j) High crankcase pressure trip

(k) Generator ground overcurrent trip

(l) Low lube oil pressure trip

(m) Loss of control air pressure trip

(5) The following remote annunciation is provided in the control room. Window engraving cited is exact wording.

(a) The alarm window, "DG 'X' AUTO START NOT AVAIL," will be initiated by any alarm condition which could render a diesel generator incapable of responding to an automatic emergency start. The only exception to this is for a loss of control air, which initiates a local alarm, and a "DIV. 'X' DSL GEN TROUBLE " alarm window in the control room.

(b) The alarm window, "DIV 'X' DSL GEN TRIP," will be initiated by any of the following signals:

Overspeed
Lube oil pressure low low
High crankcase pressure
Manual stop
High jacket water temperature
Low turbo oil pressure
Deleted
Engine bearing temperature high
Diesel in maintenance mode
Lube oil high temperature
Local stop/run valve engaged
Generator differential
Generator ground overcurrent
Generator loss of excitation
Generator reverse power

(c) The alarm window, "DIV 'X' DSL GEN TROUBLE," will be initiated by all general trouble conditions including fuel oil storage and day tank levels.

(d) The alarm windows, "DG 'X' TRIP UNIT TROUBLE" and "DG 'X' MASTER SEL SW IN EMERGENCY POS," are specific alarms activated by initiating devices which do not activate other windows.

(e) The window, "4.16 kV BUS 'X' INCM FDR 'X' TRIP," will be initiated as required by alarm requirements for the 4160 V switchgear. Both this window and the "DIV 'X' DSL GEN TRIP" window will be activated concurrently for certain sensed conditions that affect both pieces of equipment. In addition, each window will operate separately for alarms unique to its respective equipment.

(f) The alarm window, "DG 'X' LCI ANNUN PNL PWR FAIL," is activated when power is lost to the local annunciator panel.

(g) The alarm window "DG 'X' GROUND OVERCURRENT" will be initiated when a ground overcurrent signal is present.

(6) Protective functions of the engine or generator annunciated locally are:

(a) Low level-jacket water

(b) Low pressure-jacket water

(c) Low/High temperature-jacket water in

(d) Low/High temperature-jacket water out

(e) High-high temperature-jacket water out

(f) High temperature-after coolers water in

(g) Low level-lube oil tank

(h) Low/High temperature-lube oil in

(i) Low/High temperature-lube oil out

(j) High-high temperature-lube oil

(k) High differential press-lube oil filter

(l) High differential press-lube oil strainer

(m) Low press-turbo oil right bank

(n) Low press-turbo oil left bank

(o) Low-low press-turbo oil

(p) Low press-lube oil

(q) Low-low press-lube oil

(r) High temperature-engine bearings

(s) Crank case high pressure

(t) Deleted

(u) Overspeed

(v) Fuel pump/overspeed drive failure

(w) Barring device engaged

(x) Low press-starting air

(y) Deleted

(z) Unit fails to start

(aa) Under frequency

(ab) High temperature generator bearing

(ac) Trip generator fault

(ad) Any switch not in auto position

(ae) Generator overvoltage

(af) Low voltage

(ag) Loss of control power

(ah) Low/High level-fuel day tank

(ai) Low press-fuel oil

(aj) High Δp-fuel pump strainer

(ak) High Δp-fuel filter

(al) Low press-control air

(am) Deleted

(an) Generator or generator ground overcurrent

(ao) Loss of excitation or reverse power

(ap) Diesel engine in maintenance mode

(aq) PT fuse failure

(ar) Voltage regulator bridge trouble

(as) Voltage regulator switch not in AUTO

(at) Diesel fuel oil tanks high/low

g. Each diesel generator set is capable of being started or stopped manually from the control room as well as from a local control station near the engine.

h. Engine Mechanical Systems and Accessories

Descriptions of the above systems and accessories are given in Chapter 9 under the following listed subsections:

(1) Cooling water - 9.5.5

(2) Lubricating oil - 9.5.7

(3) Fuel oil - 9.5.4

(4) Starting air - 9.5.6

i. Interlocks and Testability

Since each diesel generator set when operating normally is totally independent of the preferred power supply and the companion diesel generators, interlocks, per se, exist only in connection with the testing of a generator set against the preferred source as a load. Normal surveillance testing is performed which permits testing only a single generator set at a time. Interlocks to the LOCA and loss-of-preferred-power sensing circuits cause the diesel generator set to automatically terminate continued paralleled operation with the offsite sources if either of these signals appear during a test.

8.3.1.1.4.1.1 Qualification Testing

[HISTORICAL INFORMATION] [In accordance with Branch Technical Position EICSB-2 "Diesel Generator Reliability Qualification Testing," the standby diesel generator manufacturer, Delaval Engine and Compressor Division, has performed a series of qualification tests to verify compliance with the requirements of the above referenced NRC position.

This test program included the following:

a. Load Capability Qualification Test and Margin Test

1. Load Capability Qualification Test

The diesel generator set was run at 110 percent load (7700 kW) at 0.905 power factor for two hours. The load was then dropped to 100 percent (7000 kW) at 0.883 power factor for one additional hour. The diesel generator operated satisfactorily during this entire test.

2. Margin Test

The engine generator successfully simultaneously started two 1000 hp motors and one 300 hp motor (2300 hp total) and picked up a 2728 kW resistive load within 10 seconds of the initiation of the start signal.]

This test was performed twice with the following tabulated results:

Test	Time	Motor Start HP & kW Load	Voltage Dipped to	Voltage Recover to 90% Rated	Freq. Dipped to	Frequency Recover to 98%	Cumulative Running Load
	Seconds		Volts	Seconds	Hertz	Seconds	kW
1	0 + 7.0	2300 HP 2728 kW	3250	0.45	57.8	0.82	3050
2	0 + 7.0	2300 HP 2728 kW	3275	0.41	57.8	0.83	3100

b. 300 Start Test

[HISTORICAL INFORMATION][A total of 305 official engine starts were made without a failure to start upon initiation of the start signal. This included the actual 300 start test and five subsequent starts. Strip chart recordings show that from the time of the initiation of the start signal, the engine was up to synchronous speed and picked up a 3500 kW load (50 percent) in no more than seven seconds for each start. The first 270 starts were

conducted from standby keep-warm temperatures. For each start, the engine was run until the normal operating temperatures of the lube oil and jacket water were reached. This took approximately ten minutes. After these temperatures were reached, the engine was stopped and the water and oil were force cooled back to their standby conditions. This took approximately 15 minutes. Starts No. 270 through 300 were conducted from the normal half-load temperatures of lube oil and jacket water. These starts were conducted on approximately an 11-minute cycle.

The engine operated in a normal manner throughout the test. There were no abnormal indications and the operating parameters were well within the design limitations of the engine.

Although the engine successfully started, run 299 was voided because the engine did not reach frequency within the required time. This was due to an operator error.

c. Because only one unacceptable engine start occurred in the 305 total starts, no further testing or review of systems design adequacy is required.]

8.3.1.1.4.1.2 Maintenance

Operation and minor maintenance of the emergency diesel generators are performed by or under the cognizance of a Nuclear Operator "A" (licensed operator). Maintenance of the emergency diesel generators is performed under the supervision of a Maintenance Supervisor (supervisor not requiring a license). These personnel are trained in accordance with requirements in Regulatory Guide 1.8, 9/75 as described in Appendix 3A.

During the operational phase, the diesel generator units and their support systems are aligned for standby service operation in accordance with approved operating and surveillance procedures. These procedures include control switch alignment to standby service, circuit breaker checks, valve lineups, and operator checks to assure proper operation of the diesel engine "Keep Warm" (lube oil circulating and water circulating) systems.

The synchronizing speed check relays are calibrated prior to testing, and periodically thereafter, in accordance with plant maintenance procedures. These relays have no controls to be adjusted by the operator. If during the operating phase, a

periodic test is performed and the operator makes adjustments to the governor controls, i.e., speed and voltage, these controls will automatically reset to preset values by the prepositioning circuitry upon termination of the test. Likewise, if an emergency signal is received during the test, the prepositioning circuit will adjust the speed and voltage to the preset values.

Preventive maintenance will be performed in accordance with an approved maintenance program, commensurate for nuclear standby service, that takes into consideration the following factors: the manufacturer's recommendations, diesel owners group recommendations, engine run time, calendar time, and the GGNS comprehensive maintenance inspection program. Upon completion of repairs or maintenance, complete system and equipment checks will be performed to ensure proper system operability. The diesel generator will then be returned to standby service under the control of the control room operator.

The above testing and surveillance program is governed by the compliance with Regulatory Guide 1.9, Rev. 3 except for exceptions discussed in the Technical Specification surveillance requirements.

A program has been established to evaluate component malfunctions. This program is designed to document component malfunctions, determine the root cause of malfunctions, and specify the corrective action required to prevent recurrence. Evaluations performed under this program include but are not limited to investigative testing and replacement of components which repeatedly malfunction with similar components of higher reliability, as required by the individual situation.

8.3.1.1.4.1.3 120 Volt AC Essential Instrument Power System

The design of the essential instrument power system is to provide power to all essential instrumentation throughout the plant.

The essential instrument power system consists of redundant distribution panels fed through transformers connected to separate ESF motor control centers (MCC), shown in Figure 8.1-1. There are no bus ties or interconnections between distribution panels of different safety divisions.

All equipment associated with the essential instrument power system is readily accessible for inspection and testing. Service and testing will be done on a routine basis in accordance with the manufacturer's recommendation.

8.3.1.1.4.1.4 120 Volt AC Class IE Uninterruptible Power System

[HISTORICAL INFORMATION] [The Unit 1 Class IE 120 volt ac uninterruptible power system (UPS) provides power for essential services which should not be subjected to power interruptions. The system is separated into four divisions with one inverter and one distribution panel assigned to each division as shown on Figure 8.3-7b. All circuits in the system are separated and routed in accordance with
IEEE 384.

The class 1E UPS system consists of four class 1E inverters with four class 1E alternate sources, each with a static transfer switch and a maintenance bypass switch per UPS division. The inverter receives power from its associated 125VDC ESF bus (UPS division 1 & 3 from ESF division 1 and UPS division 2 & 4 from ESF division 2) and converts this DC power to 120VAC. A second enclosure houses an alternate source consisting of a 480/120 VAC, single phase, step down voltage regulated transformer powered from its associated 480VAC ESF bus. The inverter is the normal source of power to the UPS distribution panel. Should the inverter develop trouble, the static transfer switch will automatically transfer the load to the alternate source in sync., without interruption of power to the load. The manual bypass switch is a make before break type switch that allows transfer to the alternate source manually, without interruption of power to the load, to allow preventative maintenance to be performed on the inverters.

The inverters and alternate sources (voltage regulating transformers) provide electrical isolation between the inverter and alternate source input and outputs. Thus, there is no violation of the separation criteria in having the UPS division 3 and 4 supplied from ESF division 1 and 2 respectively.

Essential loads supplied by the uninterruptible power system include certain loads from the transient test system and the reactor protection system.]

8.3.1.1.4.1.5 120/240 Volt AC Non-Class IE Uninterruptible Power System

[HISTORICAL INFORMATION] [The 120/240 volt ac uninterruptible power system consists of six inverters for Unit 1 which provide power for non-Class IE services which should not be subjected to power interruptions.
These services are necessary for the normal operation and reliability of the plant but are not required for plant safety. The power is free of extraneous voltage spikes, switching surges, and momentary interruptions as dictated by the requirements of computers and instruments which use these sources.

The 120/240 volt ac uninterruptible power system is designed to provide a source of power which satisfies the voltage and frequency variation limit requirements of the station computers. A high degree of power continuity is provided, with the ability to transfer to an alternate ac source of power with sufficient speed so the operation of the computers and instruments are not affected.

Normally, the non-Class IE uninterruptible ac power system receives its power from an inverter static switch arrangement (see Figures 8.3-7, 8.3-7a and 8.3-7c) which is fed from the station 125 volt dc non-Class IE battery and non-Class IE battery chargers which are connected to one of the Class IE buses. Any failure in the equipment in the 125 volt dc supply circuit enables the static switch to transfer the power source automatically to an alternate source fed from a 480 volt Class IE ac bus through a transformer. However, when a LOCA occurs, the Class IE feed from the load center that feeds the chargers is tripped.

Equipment associated with the non-Class IE uninterruptible ac power system is readily accessible for inspection and testing. Service and testing can be done with the aid of the manual

bypass switch shown in Figure 8.3-7.

8.3.1.1.4.1.6 480 Volt AC Non-Class IE Uninterruptible Power System

The 480 volt, 3 phase, ac uninterruptible power system consists of two inverters for Unit 1 which provide power for non-Class IE services which should not be subjected to power interruptions. These services are necessary for the normal operation and reliability of the plant but are not required for plant safety.

The power is free of extraneous voltage spikes, switching surges, and momentary interruptions as dictated by the requirements of computers and instruments which use these sources.

The 480 volt, 3 phase, ac uninterruptible power system is designed to provide a source of power which satisfies the voltage and frequency variation limit requirements of the station computers. A high degree of power continuity is provided, with the ability to transfer to an alternate ac source of power with sufficient speed so the operation of the computers and instruments is not affected.

Normally, the non-Class IE uninterruptible ac power system receives its power from an inverter static switch arrangement (see Figures 8.3-7, 8.3-7A, and 8.3-7C) which is fed from the station 125 volt dc non-Class IE battery and non-Class IE battery chargers which are connected to one of the Class IE buses. Failure in the equipment in the 125 volt dc supply circuit enables the static switch to transfer the power source automatically to an alternate source fed from a 480 volt Class IE ac bus through a transformer, a disconnect, and an isolation transformer. However, when a LOCA occurs, the Class IE feed from the load center that feeds the chargers is tripped.

Equipment associated with the non-Class IE uninterruptible ac power system is readily accessible for inspection and testing. Service and testing can be done with the aid of the manual bypass switch shown in Figure 8.3-7.]

8.3.1.1.4.2 High Pressure Core Spray System (HPCS) Power System Diesel Generator Set 13 (23)

8.3.1.1.4.2.1 General

Figures 8.3-12a and 8.3-12b show the arrangement, source connection, logic protection and surveillance for the HPCS power system.

[HISTORICAL INFORMATION] [The HPCS is self-contained except for the initiation signal source and access to the preferred source of offsite power through the plant ac power distribution system. It is operable as an isolated system independent of electrical connection to any other system through its use of a dedicated HPCS diesel-generator. The required standby auxiliary equipment such as heaters and battery charger are supplied from the same power source as the HPCS motor

when the diesel-generator is not running. Voltage and frequency of the HPCS diesel-generator is compatible with that available from the plant ac power system.

The HPCS diesel-generator has the capability to quickly restore onsite power to the HPCS pump motor in the event offsite power is unavailable and to provide all required power for the startup and operation of the HPCS pump motor to be compatible with safe shutdown of the plant.] The HPCS diesel generator starts automatically on a signal from the plant protection system or the HPCS supply bus undervoltage systems, and will be connected to the HPCS bus when the plant preferred ac power supply is not available. In the event offsite power dips to 88 percent of nominal voltage, a second level of undervoltage protection on the HPCS bus will trip the Division 3 bus feeder breaker after four seconds during LOCA conditions. Under normal conditions, an identical trip is initiated after five minutes and four seconds of an unmitigated voltage drop to 88 percent. Tripping this breaker effectively starts the HPCS diesel-generator and connects it to the bus.

A LOCA condition will trip the HPCS diesel generator breaker (returning the engine to standby) during a generator load test if the preferred ac power supply is available.

The failure of the HPCS DG will not negate the capability of other power sources. There is no provision for automatic paralleling with the auxiliary power or with standby power sources. Provisions for manual paralleling with normal power sources are made for loading the diesel generator during exercise mode. At least one interlock is provided to avoid accidental paralleling. There is no sharing of HPCS power system between any other unit.

8.3.1.1.4.2.2 Equipment Identification

The major HPCS power system equipment such as diesel generator, switchgear, motor control center and transformers are identified by a nameplate engraved "Nuclear Safety Related Division 3." Raceways are identified as described in subsection 8.3.1.2.3e.

8.3.1.1.4.2.3 HPCS Class IE Electrical Equipment Capacity

[HISTORICAL INFORMATION] [HPCS power system electrical apparatus is sized on the basis of the most severe conditions it will be subjected to, in either a continuous or intermittent basis in any mode of operation.

Intermittent loads are factored in on the basis of heating (e.g., short time peaks are not added directly to determine total continuous load imposed). Adverse environmental conditions have been taken into consideration (e.g., derating of cable for temperatures higher than the basic rated values and use of multipliers on actual service hours for motors operated at higher than normal rated temperatures).

The switchgear ratings established are consistent with bus loading and interrupting capacity requirements and are compatible with maximum system available short circuit current values at the point where feeders connect to Class IE switchgear.

Motors are designed to start and accelerate their pump load with the minimum available voltage applied to the motor terminals.]

The minimum difference between the motor torque and the pump torque at any given speed during acceleration is 10 percent of motor rated torque as specified in the current draft of ANSI N45-551.

Motors are provided with thermocouples on bearings and in windings to verify that temperature rise is acceptable.

Motors are initially tested in accordance with NEMA-MG-1.

The Division 3 HPCS diesel generator is capable of starting the HPCS motor within the required time though voltage and frequency drop will exceed the limits specified in NRC Regulatory Guide 1.9, Rev. 3.

[HISTORICAL INFORMATION] [8.3.1.1.4.2.4120-Volt AC Essential Instrument Power System

The design of the essential instrument power system provides power to all essential HPCS instrumentation.

The essential instrument power system consists of non-redundant distribution panels fed through transformers connected to separate engineered safety features motor control centers.

All equipment associated with the essential instrument power system is readily accessible for inspection and testing. Service and testing will be done on a routine basis in accordance with the manufacturer's recommendation.]

8.3.1.1.4.2.5 HPCS Class IE Electric Equipment Considerations

For Class IE equipment aspects of the HPCS power system, the following guidelines are utilized:

8.3.1.1.4.2.5.1 Physical Separation and Independence

Equipment of one division is segregated from other division equipment in accordance with documents, codes, and standards cited in the design basis. Electrical equipment and wiring for the safeguards systems segregated into separate divisions are separated so that no design basis event is capable of disabling sufficient equipment to prevent reactor shutdown, removal of decay heat from the core, or to prevent isolation of the containment in the event of a design basis accident. The arrangement considerations described in subsection 8.3.1.4.1 apply fully to the HPCS installation.

8.3.1.1.4.2.5.2 HPCS Class IE Electrical Equipment Design Bases and Criteria Aspects

a. Motors are sized in accordance with NEMA standards and manufacturers ratings to be at least large enough to produce the starting, pull-in, and driving torque calculated to be needed for the particular application, having due consideration for capabilities of the power sources.

b. Power sources, distribution system, and branch circuits are designed to maintain acceptable voltage and frequency.

c. The selection of motor insulation from alternative types such as Class F or Class B is a design consideration based on service requirement, environment, space, and other factors and the choice of any one type of insulation is not in itself inherent to safe operation. Class F insulation is used for all ECCS motors. The insulation systems used for Class IE motors are qualified by environmental tests in accordance with IEEE 334-1974.

d. Interrupting capacity of switchgear, motor control centers, and distribution panels are compatible with the short circuit current available at the HPCS bus. Calculation of available short circuit currents HPCS power system is in accordance with ANSI C37.010-1964.

e. High resistance grounding method has been employed in the HPCS power system because of the importance of detecting small ground faults and possible need to keep the entire system operable with a ground fault in existence. Ground fault is annunciated in the main control room for operator action.

8.3.1.1.4.2.5.3 HPCS Class IE Electrical Equipment Circuit Protection

[HISTORICAL INFORMATION] [Circuit protection of the HPCS bus is coordinated with the design of the overall protection system for the plant auxiliary system. Simplicity in load grouping is employed to achieve simplicity in conventional protective relaying practice for isolation of fault. There is no load shedding or required sequencing in the HPCS power system. Emphasis is given in preserving function and limiting loss of Class IE equipment function in situations of power loss and equipment failure. Normal overload relay functions and ground fault relaying give alarm indication only. Faults are isolated by instantaneous relaying.

The HPCS diesel-generator protection is described in subsection 8.3.1.1.4.2.10. The HPCS transformer has normal overload and instantaneous protection. The HPCS motor has both instantaneous and inverse time overcurrent protection. These give alarm indications only in case of overloads. The stall condition is monitored by a high dropout instantaneous relay in conjunction with the inverse time overcurrent relay. These trip the motor in case of incipient stall. Relay settings are coordinated in such a way that interference of service is not communicated to a "higher" level involving equipment other than that immediately affected by the fault or overload. This is achieved by selecting trip levels and time delay settings so that faults are not passed through to circuit breakers ahead in a chain leading to the power supply, but are relayed off without opening the latter and thus keeping on line the other loads which share a bus. However, a faulty trip device or circuit breaker trip is protected against ultimate damage by circuit breakers "ahead" of them through coordinated amplitude and time settings. In other words, backup relaying includes within its protective zone all of the next adjoining system elements insofar as practicable.]

8.3.1.1.4.2.5.4 HPCS Class IE Electrical Equipment Testing

Means are provided for periodically testing the chain of system elements from sensing devices through driven equipment to assure that Class IE equipment is functioning in accordance with design requirements. The drawout feature of protective relays allows replacement relays to be installed while the relay that was removed is bench tested and calibrated. Test switches have been provided on redundant relay installations to allow isolation of one half of the redundant installation for testing without relay removal.

Startup of the onsite power unit can be effected by simulation of LOCA signal or loss of power to the plant auxiliary power system. Connection of HPCS diesel generator to the HPCS bus will take place automatically on failure of plant auxiliary power or disconnection of auxiliary power to the HPCS bus.

8.3.1.1.4.2.6 HPCS Diesel-Generator Set

[HISTORICAL INFORMATION] [The HPCS standby diesel generator is used to supply power to the HPCS system in the absence of the preferred power source. Figures 8.3-12a and 8.3-12b show the interconnections between the preferred power system, the HPCS diesel-generator unit, and the HPCS pump and valves, and the other small HPCS related loads.]

The engines are operated in accordance with approved operating procedures also derived from manufacturer's recommendations.

These operating procedures contain precautions to alert the operator to the problems of no-load operation at rated speeds, and they provide for monitoring and recording the running time and load which can be compared to the turbocharger end-of-life criteria specified in the manufacturer's instruction manual.

The HPCS diesel engine is provided with a closed cooling system containing immersion heaters to maintain the engine coolant temperature, an expansion tank, a temperature regulating valve, and a lube oil cooler. This system is described in subsections 9.5.5.2 and 9.5.7.2.

[HISTORICAL INFORMATION] [The generator is rated to have sufficient capacity to start and supply the HPCS induction motor for the HPCS pump, a stepdown transformer, and several 460 volt induction motors (less than 300 hp continuous) which drive the engine cooling water pump and several valve operator motors (60 hp). The valve motors are

supplied power for only a short period of time and do not impose a significant load on the generator. The HPCS pump motor has a power nameplate rating of 3500 hp at 4000 volts.] The diesel-generator unit has the capacity to start and supply the loads required by the HPCS in the sequence and within the time requirements described in Section 6.3.

8.3.1.1.4.2.7 HPCS Diesel-Generator Starting, Lubricating, and Fuel Oil Systems

The air starting system is described in subsection 9.5.6.2.2.

The lubrication system is described in subsection 9.5.7.2.

The fuel oil system is described in subsection 9.5.4.2.

8.3.1.1.4.2.8 HPCS Diesel-Generator Control Power

Control power for the diesel-generator unit is supplied from its own 125 volt dc system which consists of a battery, a battery charger capable of carrying the normal load in addition to normal charging requirements, and a spare battery charger provided for maintenance purposes only.

8.3.1.1.4.2.9 HPCS Diesel-Generator Initiation

[HISTORICAL INFORMATION] [There are four initiation signals which automatically start the HPCS diesel generator. The first is a loss of normal potential at the HPCS bus. The second is a prolonged degraded potential condition at the bus. The other two signals are LOCA signals (reactor low water level and/or high drywell pressure) which are described in detail in subsection 7.3.1.1.1. On reaching rated speed and voltage, the generator is automatically connected to the HPCS bus if the preferred ac power source is not available. Once the diesel generator has been energized, the unit will continue to operate until manually de-energized or one of the protective devices of the unit causes a trip.]

8.3.1.1.4.2.10 HPCS Diesel-Generator Protective Devices

When the HPCS diesel generator is called upon to operate under LOCA or Loss of Voltage conditions, only the emergency protective devices are used. The emergency protective devices are:

a. Generator differential current

b. Engine overspeed

All other trip signals are blocked from tripping the diesel generator during the LOCA or Loss of Voltage. Normal protective devices are used to protect the machine when it is operating in parallel with the normal power system during periodic tests. The normal protective devices are:

a. Loss of excitation (40)

b. Reverse power (32)

c. Overcurrent with voltage restraint (51/67)

d. Low lube oil pressure

e. High jacket water temperature

f. Generator differential current

g. Engine overspeed

h. High crankcase pressure

Those protective devices with standard (ANSI) numbers indicated in brackets operate to trip and lockout the generator. The remaining devices act through the engine shutdown relay. These relays are automatically blocked from the tripping circuits under accident conditions.

Additional protective devices are provided for alarm function indicating in the main control room and/or locally. They are:

a. Low Water Level Alarm

b. Low Water Pressure Alarm

c. Immersion Heater Control SW

d. Low Jacket Water Temp. Alarm

e. High Jacket Water Temp. Alarm

f. High Jacket Water Temp. Shutdown

g. Low Fuel Oil Pressure Alarm

h. Fuel System Fault Alarm (Eng. Driven)

i. Fuel System Fault Alarm (Mtr. Driven)

j. Start Control SW. - Diesel Driven Comp.

k. Start Control SW. - Motor Driven Comp.

l. Low Air Press. Alarm (Air Tank)

m. Low Air Press. Alarm (Engine Inlet)

n. Air Pressure SW. in Start Logic

o. Low Lube Oil Sump Level Alarm

p. High Lube Oil Temperature Alarm

q. Low Lube Oil Temperature Alarm

r. Lube Oil Relief Valve Open Alarm (Temp.)

s. Lube Oil Relief Valve Open (Press.)

t. Low Lube Oil Pressure Shutdown

u. High Crankcase Pressure Alarm & S/D

v. Low Lube Oil Pressure Alarm

w. Low Soakback Pump Pressure

x. Engine in Maintenance Position

y. Diesel Engine Trouble

z. Control Power Failure

aa. Exhaust Diff. Temp High

ab. Generator Temp

ac. Generator Ground (59)

ad. Generator Overcurrent (51)

ae. Battery Charger Input Power Failure

af. Low HPCS D/G Room Temp. Alarm

[HISTORICAL INFORMATION] [The generator differential relays and overspeed trip devices are retained under emergency conditions to protect against what could be major damage. All the necessary bypassed trip devices alarm in the control room and provide the operator with sufficient information to take the necessary corrective action. Since the diesel generator is performing a safety-related core cooling function during accident conditions, these trip devices cannot be permitted to interrupt the diesel generator's operation. The capability of the diesel to operate under these abnormal conditions is left to the operator.]

8.3.1.1.4.2.10.1 The First Alert Alarm Feature

[HISTORICAL INFORMATION] [The first alert alarm feature provides seven alarm indications in parallel with existing alarms on the diesel generator local panel. When there is a diesel trouble alarm in the control room, the operator can proceed to the diesel generator local panel and determine, via a flashing indication, which of the following seven protective devices originated the alarm condition.

Unit/Trip Lockout
Control Power Failure
High Crankcase Pressure
Low Lube Oil Pressure
Overspeed Trip
Low/High Jacket Water Temperature
Fail to Start/Run]

8.3.1.1.4.2.11 HPCS Prototype Qualification Program

[HISTORICAL INFORMATION] [A prototype test is performed to establish the adequacy of the diesel-generator units to successfully accelerate the bulk HPCS pump loads. The test consists of starting the actual HPCS pump motor depicting as close as possible the actual HPCS pump loop (HPCS system in condensate to condensate test mode) and auxiliary loads several times within the design time requirement. A General Electric topical report on HPCS power system unit, NEDO-10905, and subsequent amendments describe and show theoretical and experimental evidence as to the adequacy of the design.

A prototype qualification test of the design listed as engine model "Tandem 12-645E4" in NEDO-10905 (Table 3-1), similar to that described in the amended Topical Report (NEDO-10905-3, dated August 1979), has been performed at GGNS.

The results of the prototype qualification test demonstrate that the HPCS power supply can meet the design requirements. A test report summary was provided in a letter dated April 14, 1982, AECM-82/152.]

8.3.1.1.4.2.12 Acceptability Criteria for HPCS Diesel-Generator Sets

[HISTORICAL INFORMATION] [A diesel generator is acceptable if it is capable of starting and accelerating the design load to the desired speed within the specified time maintaining the voltage and frequency within limits that will not degrade the performance of any of the loads below their requirements during load application and/or load removal. The unit demonstrates a torque margin in excess of starting period requirements.]

8.3.1.1.4.2.13 Maintenance

The HPCS diesel engine preventative maintenance will be performed in accordance with an approved maintenance program, commensurate for nuclear standby service that takes into consideration the following factors: the manufacturer’s recommendations, diesel owners group recommendations, engine run time, calendar time, and the GGNS comprehensive maintenance inspection program.

A program has been established to evaluate component malfunctions. This program is designed to document component malfunctions, determine the root cause of malfunctions, and specify the corrective action required to prevent recurrence. Evaluations performed under this program include but are not limited to investigative testing and replacement of components which repeatedly malfunction with similar components of higher reliability, as required by the individual situation.

8.3.1.1.5 Reactor Protection System (RPS) Power System

8.3.1.1.5.1 General

The RPS power system is designed to provide power to the logic system that operates the reactor protection system. It prevents an inadvertent reactor scram due to a transient disturbance of power to the reactor scram logic.

The principal elements of the reactor protection system power system are shown in Figure 8.3-14. The system consists of two high-inertia, alternating current, motor-generator sets and four Class 1E uninterruptible power supplies.

[HISTORICAL INFORMATION] [Each motor-generator set supplies control power to independent reactor scram trip logics and reactor protection trip system. However, parts of nuclear steam supply shutoff system, MSIVs, power range neutron monitoring system, and parts of process radiation monitoring system, are supplied from Class 1E uninterruptible system. The RPS power is classified as nonessential because failure of the power supply causes a reactor scram. However, the power feeds to independent divisions are physically separated and feed four redundant buses.]

Safety-related signal cables, power cables, and cable trays are identified to distinguish from non-safety-related equipment and to distinguish among different divisions of safety-related equipment by nameplates and/or color codes.

Safety-related instrument panels are identified to distinguish from non-safety-related equipment and to distinguish among redundant, safety-related equipment by nameplates.

8.3.1.1.5.2 Components

[HISTORICAL INFORMATION] [Each of these high inertia motor-generator sets has a voltage regulator which is designed to respond to a step load change of
50 percent of rated load with an output voltage change of not more than 15 percent. The motor-generator sets do not require any manual operation or adjustment during a coastdown or acceleration period. High inertia is provided by a flywheel. The inertia is sufficient to maintain the voltage and frequency of generated voltage within 5 percent of the rated values for a minimum of 1 second following a total loss of power to the drive motor.

The electrical protection assembly (EPA), consisting of Class IE protective circuitry, is installed between the RPS and each of the power sources. The EPA provides redundant protection to the RPS and other systems which receive power from the RPS buses by acting to disconnect the RPS from the power source circuits.]

The EPA consists of a circuit breaker and discrete relays/logic which senses line voltage and frequency and trips the circuit breaker open on the conditions of overvoltage, undervoltage, and under-frequency. Provision is made for set point verification, calibration, and adjustment under administrative control. After tripping, the circuit breaker must be reset manually. Trip set points are based on providing nominal 120 V ac, 60 Hz at the RPS logic cabinets, which assures 57 Hz, 105 V ac minimum at the scram solenoid valves. If the voltage or the frequency is outside the GGNS Technical Specification allowable values, the EPA will disconnect power to the RPS bus.

The EPA assemblies are packaged in an enclosure designed to be wall mounted. The enclosures are mounted on a seismic Category I structure separately from the motor generator sets and separate from each other. Two EPAs are installed in series between each of the two RPS motor-generator sets and the RPS buses, and between the auxiliary power sources and the RPS buses. The block diagram on Figure 7.2-11 provides an overview of the EPA units and their connections between the power sources and the RPS buses. The EPA is designed as a Class IE electrical component to meet the qualification requirements of IEEE 323-1974 and IEEE 344-1975. It is designed and fabricated to meet the quality assurance requirements of 10CFR50, Appendix B.

The enclosures containing the EPA assemblies are located in an area where the ambient temperature is between 50°F and 104 °F.

The EPA assemblies are located in a mild environment and are not required to operate during accident conditions. The assemblies are seismically qualified per IEEE 344-1975, to the Safe Shutdown Earthquake (SSE) and Operating Basis Earthquake (OBE) acceleration response spectra and environmentally qualified to the requirement of IEEE 323-1974.

8.3.1.1.5.3 Sources

The power to the RPS buses is supplied from two sources, as provided on Figure 7.2-11. The primary source of power is the motor-generator sets. The alternate source of 120 volt power is

obtained from a voltage regulator which is fed from a Class IE motor control center. The MCC is tripped upon receipt of an accident signal to provide isolation between the Class IE distribution system and the non-Class IE RPS power supply system. The two motor-generator sets are supplied from two 480 V motor control centers fed from the non-Class IE electrical distribution system. The alternate power switch prevents the paralleling of power sources. Indicating lights are provided in the main control room to monitor the status of both the motor-generator sets and the instrument buses.

8.3.1.1.5.4 Operating Configuration

During operation, the reactor protection system buses are energized by their respective motor-generator sets. Either motor-generator set can be taken out of service by manually operating the power source selector switch which automatically takes one motor-generator set out and connects that RPS bus to its alternate power source. An interlock is provided to prevent paralleling of a motor-generator set with the alternate supply. Administrative control is utilized to prevent concurrent connection of both RPS buses to their alternate supplies during power operation, except for limited emergent plant situations which require both RPS buses to be connected to their alternate supply for short periods. Alignment of both RPS buses to their alternate supply is not the normal system line up because of increased vulnerability to grid perturbations that could result in inadvertent trip of both divisions of RPS connected loads. A loss of power to either motor-generator set is readily monitored in the main control room (white indicating lamp goes off) where the operator, on detecting such a condition, can switch over to the alternate power source. A loss of power to one motor-generator set results in a single trip system trip. A complete, sustained loss of electrical power to both buses results in a scram, delayed by the motor-generator set flywheel inertia for a minimum of 1 second.

8.3.1.1.5.5 See Section 8.3.1.1.4.1.3

8.3.1.1.5.6 See Section 8.3.1.1.4.1.5

8.3.1.1.5.7 See Section 8.3.1.1.4.1.4

(This page has been deleted)

8.3.1.1.6 Safety-Related System Criteria

8.3.1.1.6.1 Electric Motors and Torque Considerations

Motors employed for Class IE service are designed and constructed to IEEE Std. 323, 334, and 344 as well as all applicable trade and industry standards in effect at the time of their purchase. See Sections 3.9 and 3.11.

Motors are matched to the driver equipment so as to produce sufficient accelerating torque to successfully start the equipment at minimum available motor terminal voltage. A "start" is considered successful if rated speed can be obtained in less than 5 seconds, which is the sequencing increment between group load applications, and within the allowed motor heating curve. This has been generally achieved by requiring a minimum of 10 percent difference between the instantaneous available driver torque and driven equipment demand torque. When such a difference is obtained, accelerating times on the order of 3 seconds are achievable on centrifugal pumps.

8.3.1.1.6.2 Temperature Monitoring and Circuit Protection

The nature of Class IE electrical equipment is such that protection of the equipment, short of destruction, is secondary to accident mitigation and safe shutdown of the plant. Temperature monitors and overload heaters are set only to alarm overload/overtemperature conditions during functional operation of Class IE equipment. Trip circuits actuate only to prevent catastrophic failure which could augment rather than mitigate an undesirable circumstance. Coordination calculations show that protective devices actuate at the lowest level necessary to isolate a fault. No cascading of protective devices has been employed. See also subsection 8.3.1.1.4.2.5.3 regarding HPCS circuit protection.

8.3.1.1.6.3 Interrupting Capacity of Switchgear and Other Protective Devices

Fault current available at all voltage levels has been restricted to values within the certified rating of the interrupting devices employed at that level. All possible sources of fault current contributions have been considered, including abnormal sources such as an emergency diesel generator on test. Calculations of available short circuit currents is in accordance with ANSI C37.010-1972.

8.3.1.1.6.4 Grounding

The balance-of-plant and Class IE Divisions 1 and 2, both onsite and offsite, power distribution systems are low-resistance grounded. The rationale employed is that the application and coordination of protective devices has been analyzed and determined to be of such reliability that spurious ground fault trips do not constitute a degradation of any distribution system. When long-term accident mitigation and shutdown cooling requirements are considered, it becomes increasingly desirable to avoid a disabling ground fault on power equipment.

Discussion of grounding on the HPCS power supply (ESF Division 3) is covered in subsection 8.3.1.1.4.2.5.2e.

8.3.1.2 Analysis

The following analysis demonstrates compliance of the ESF Divisions 1 and 2, HPCS Division 3, and the RPS power supply to selected NRC General Design Criteria, NRC Regulatory Guides and IEEE Standards. The analysis establishes the ability of the systems to sustain credible single failures and retain their capacity to function.

8.3.1.2.1 Compliance

a. ESF Divisions 1 and 2

1. Compliance with Criterion 17

The ESF system is designed with sufficient capacity, independence, and redundancy to assure that core cooling, containment integrity, and other vital functions are maintained in the event of postulated accidents, assuming a single failure. The design of the onsite and offsite electrical power systems provides compatible independence and redundancy to ensure an available source of power to the ESF loads. Electrical power from the transmission network to the 500 kV switchyard and 115/4.16 kV ESF transformer is provided by physically independent transmission lines. This provides three offsite sources of powerto the ESF buses, one more than required by Criterion 17. Three physically independent circuits, one more than required, are provided from the switchyard to the onsite ESF distribution system.

The degree of reliability of the power sources required for safe shutdown is considered very high due to independence and ample redundancy; it equals or exceeds all the requirements of Criterion 17.

2. Compliance with Criterion 18

The auxiliary electrical system is designed to permit inspection and testing of all important areas and features, especially those which have a standby function and whose operation is not normally demonstrated. As detailed in the Technical Specifications, periodic component tests are supplemented by extensive functional tests during outages (the latter based on simulation of actual accident conditions). These demonstrate the operability of diesel-generator sets, battery system components, and logic systems, thus verifying the continuity of the systems and the operation of the components. A complete preoperational test of the onsite ESF power distribution system is a prerequisite to initial fuel loading.

3. Compliance with Regulatory Guide 1.6

The standby ac power system consists of three diesel-generator sets, one exclusively feeding each of the three ESF load groups. Each load group has its own dc power system, energized by a battery and battery chargers. The three load groups possess complete independence. The standby power system redundancy is based on the capability of any two of the three load groups to provide the minimum safety functions necessary to shut down the unit and maintain it in the safe shutdown condition.

Each Division 1 and 2 standby power source is composed of a single generator driven by a single diesel engine having fast-start characteristics and sized in accordance with Regulatory Guide 1.9.

The design of the standby power system is therefore in complete compliance with the regulations of Regulatory Guide 1.6.

4. Compliance with Regulatory Guide 1.9

The diesel generator design ratings were determined in accordance with IEEE 387-1977 which was endorsed by RG 1.9, Rev. 2. This design criteria for diesel generator sets 11 and 12 selection was initially determined to be acceptable as indicated by Safety Evaluation Report (SER) 8.3.1. The load rating design requirements subsequently changed as indicated by SER Supplement 6.

Diesel Generator sets 11 and 12 load testing requirements at a maximum of (7000 kw) was reduced to a maximum of (5740 kw) per NRC request letter dated July 17, 1984 (MAEC-84/0267). This resulted in a change to the Technical Specifications operability surveillance requirements for load testing. Tech Spec changes were submitted via letter dated July 20, 1984 (AECM-84/0374) to require verification of loading at ≥5450 kw and ≤5740 kw.

Also MAEC-84/0267 resulted in a requirement to avoid unnecessary loading above 5740 kw. The lower value of 5450 kw defined by AECM-84/0374 corresponds to approximately 78% of the continuous rating of the diesel generators and is greater than the auto-connected loads required for the loads required for the loss of offsite power and post-LOCA conditions in accordance with Technical Specifications.

In accordance with Regulatory Guide 1.9, Rev. 3, each emergency diesel generator unit of an onsite power supply should be selected to have a continuous load rating (as defined in IEEE Std 387-1984) equal to the sum of the conservatively estimated loads (nameplate) needed to be powered by that unit at any one time plus a 10 to 15% margin.

Diesel Generators were selected in accordance with Regulatory Guide 1.9, Rev. 2 and continue to meet Regulatory Guide 1.9, Rev. 3 with exceptions noted above.

Deleted

The sequencing of large loads at 5-second intervals ensures that large motors will have reached rated speed and that voltage and frequency will have stabilized before the succeeding loads are applied. The decrease in frequency and voltage has been verified to be 95 and 80 percent of nominal, respectively.

Recovery of voltage and frequency to within 10 percent of nominal and within 2 percent of the pre-sequence value, respectively, has been verified to be accomplished within 60 percent of the sequencing interval of 5 seconds. Step loading and disconnection of the largest single load does not cause the diesel generator to exceed the lower of nominal speed plus 75 percent of the difference between nominal speed and the over speed trip setpoint or 115 percent of nominal speed, thus precluding an inadvertent overspeed trip. The largest single load for GGNS Division 2 Diesel Generator is the Standby Service Water (SSW) pump which supplies cooling water for the Diesel Generator as well as other systems. This load is not considered a transient because the loss of the SSW pump, whether or not it was the largest single load, will result in the loss of the diesel. The largest single load which satisfies the intent of this regulatory guide is either RHR B or C pump. Rejection of either load in testing required by the plant technical specifications verifies diesel generator capability to reject the load and maintain engine speed within specified values.

The reliability of the diesels has been substantiated by an extensive test program. The tests verify the following diesel functions:

- Diesel fast start capabilities
- Load carrying capabilities
- Load shedding capabilities
- Ability of the system to accept and carry the applied loads up to its rated capacity
- Long-term no load running of the diesel unit without any detrimental effects.

The reliability of the system to start and accept loads in a prescribed time interval has been demonstrated by prototype qualification test data and was verified by preoperational tests in accordance with FSAR Sections 14.2.12.1.36 and 14.2.12.1.50. The preoperational tests verify a fast start capability and reliability after plant installation. Full-load and margin tests have been factory performed on each diesel-generator set to demonstrate the start and load capability of the units in excess of the design requirements. Three hundred valid start and load tests have been performed with no failures. A valid start and load test is defined as a start from normal standby temperature conditions with loading to at least 50 percent of continuous rating within the required sequencing time intervals, and continued operation until operating temperatures are reached. The fast start tests to verify the diesel reliability were conducted in the factory. They are documented in the QA/QC verification data package, together with the results of other tests described, and provide a permanent, onsite qualification record. (Refer to subsections 8.3.1.1.3 and 8.3.1.1.4 and NEDO 10905 for reliability analysis of the HPCS standby power supply.)

As recommended in Regulatory Guide 1.9, Revision 3, Paragraph 1.7.2, the standby diesel generator local annunciators have first out capability. The first trip alarm received on the local panel is indicated by a fast flashing of the associated annunciator window; subsequent trip alarms are indicated by slow flashing.

5. Compliance with Regulatory Guide 1.32

The design of the preferred power circuits provides for three immediately accessible circuits from the transmission network to the onsite power distribution system, one in excess of GDC 17, and thereby surpassing the preferred design of the regulatory position of Regulatory Guide 1.32.

The sizing of Class IE battery chargers is based on their ability to recharge the battery within 12 hours after discharge to a design minimum level of 105 volts while supplying the maximum steady-state load which

occurs in the post-accident period. This is in accordance with the regulatory position of Regulatory Guide 1.32.

6. Compliance with IEEE Std. 308-1971

All electrical system components supplying power to Class IE electrical equipment are designed to meet their functional requirements under the conditions produced by the design basis events. All redundant safety function equipment is physically separated to maintain independence and eliminate the possibility of common mode failure. All Class IE equipment is located in seismic Category I structures.

Class IE equipment is uniquely identified by color coding of all components according to the division to which it is assigned, as detailed in subsection 8.3.1.1.1.

Surveillance of Class IE electric systems shall be in compliance with IEEE Std. 308-1980, as are all other aspects applicable to the station design.

7. Compliance with IEEE Std. 323

Class IE electric equipment has been qualified to demonstrate that it meets design requirements. Qualification starts with identification of Class IE electric equipment. Specifications have been written so that vendors of Class IE electric equipment were required, by type tests or analysis or operating experience, to demonstrate compatibility with design objectives under service conditions. Documentation was prepared to enable independent evaluation of equipment qualification. Thus evaluation was performed and the results included in the QA/QC verification data which is onsite as permanent records. Refer to Section 3.11 for details on environmental test qualification and the revision of IEEE Std. 323 that is complied with for each piece of safety-related equipment.

8. Compliance with Regulatory Guide 1.47 (May 1973)

The ESF design precludes the inadvertent disabling of a component by racking out the circuit breakers for a different component on an intersystem or interchannel basis. This condition is not prohibited provided that equipment in no more than one division is affected at any given time.

Whenever a part of a redundant system is removed from service, the design provides for annunciation or indication of the status of the removed system.

When ESF systems or components are rendered inoperable for any reason, the redundant systems will be verified operable as required by the Technical Specifications.

b. High Pressure Core Spray (HPCS) Power Supply

Regulatory Guides 1.22, 1.40, 1.63, and 1.73 are not applicable to HPCS power supply. See NEDO-10905 for a discussion of IEEE-338 and 379. The degree of conformance to regulations applicable to HPCS power supply are discussed as follows:

1. Compliance with Criterion 17

The Class IE system is designed with sufficient capacity, independence, and redundancy to ensure that core cooling, containment integrity, and other vital functions are maintained in the event of a postulated accident, assuming a single failure. The design of the onsite and offsite electrical power systems provides compatible independence and redundancy to ensure an available source of power to these engineered safety loads.

Electrical power from the transmission network to the station is provided by three physically independent offsite power systems. This network provides one independent system more than is required by Criterion 17.

The degree of reliability of the power sources required for safe shutdown is high, because of the independence and ample redundancy, and equals or exceeds all of the requirements of the criterion.

2. Compliance With Criterion 18

The auxiliary electrical system is designed to permit inspection and testing of all important areas and features, especially those that have a standby function and whose operation is not normally demonstrated. As detailed in Technical Specifications, periodic component tests will be supplemented by extensive functional tests during the refueling outage, the latter based on simulation of actual accident conditions. These tests demonstrate the operability of diesel-generator sets, battery system components, and logic systems and thereby verify the continuity of the systems and the operation of the components.

Because the diesel generator is a standby unit, readiness is of prime importance. Readiness will be demonstrated by periodic testing. The testing program is designed to test the ability to start the HPCS loads as well as to run under load long enough to bring all components of the system into equilibrium conditions. This will ensure that cooling and lubrication are adequate for extended periods of operation. Full functional tests of the automatic control circuitry will be conducted on a periodic basis to demonstrate correct operation.

3. Compliance With Criterion 21

The HPCS diesel-generator supply is designed to be highly reliable and testable during reactor operation. It may not withstand a single failure, nor can it perform its intended function if it is taken out of service. The HPCS diesel-generator is only part of the high pressure core cooling function. If HPCS diesel-generator fails on loss of offsite power, the redundant automatic depressurization feature will depressurize the core, allowing the LPCS and/or RHR systems to provide core cooling.

4. Conformance With Regulatory Guide 1.6

The HPCS diesel-generator unit supplies power only for the HPCS and its auxiliaries; therefore, failure of any single component of the HPCS diesel generator does not prevent the startup and operation of any other standby power supply and thus meets the requirements of Regulatory Guide 1.6.

Conformance with Regulatory Guide 1.6 is described in the following subsections for each regulatory position of Paragraph D of the guide.

(a) Regulatory Guide 1.6, Position 1 Conformance

Each Class IE load is assigned to a division of the load groups. The assignment is determined by the nuclear safety functional redundancy of the load such that the loss of any one division of the load group does not prevent the minimum safety functions from being performed.

(b) Regulatory Guide 1.6, Position 2 Conformance

Each division of the ac load group has a supply from the three ESF transformers as the preferred (offsite) power sources. Each division of the ac load group also has supply from one diesel generator as the standby (onsite) power source, as shown in Figure 8.1-1.

The diesel-generator breaker can be closed automatically only if the other source breakers to that load group are open.

(c) Regulatory Guide 1.6, Position 3 Conformance

There is no automatic or manual connection of the HPCS system to any other load group.

(d) Regulatory Guide 1.6, Position 4 Conformance

Position 4 conformance is as follows:

(i) The diesel generators connected to the divisions of load groups are physically and electrically independent of each other. The diesel generator connected to any division of the load group cannot be automatically paralleled with the diesel generator that is connected to another division of the load group.

(ii) Each of the diesel generators is connected to one independent division of the load group. No means exist for connecting redundant load groups with each other.

(iii) Each of the redundant load groups is fed from only one diesel generator, as shown on Figure 8.1-1. No means are provided for transferring loads between the diesel generators.

(iv) No means exist for manually connecting the redundant load groups together. All divisions of load groups are physically and electrically independent of each other.

(e) Regulatory Guide 1.6, Position 5 Conformance

In order to comply with the requirements, the following start and load reliability tests will be performed:

(i) Prior to initial fuel loading of the reactor unit, a series of tests shall be conducted to establish the capability of the diesel-generator unit to consistently start and load within the required time.

(ii) With the exception of those diesel engine/ generator designs that are identical (minor changes may be justified by analysis) to the diesel-generator unit(s) which have been previously qualified for the HPCS application, all other different diesel engine/generator

combinations shall be individually qualified for reliable start and load acceptance requirements.

(iii) An acceptable start and load reliability test is defined as follows: A total of 69 valid start and loading tests with no failure or valid start and loading tests with a single failure shall be performed. Failure of the unit to successfully complete this series of tests as prescribed will require a review of the system design adequacy, the cause of the failure to be corrected, and the tests continued until 128 valid tests are achieved without exceeding the one failure. The start and load tests shall be conducted as follows:

Step 1

- Engine cranking shall begin upon receipt of the start signal, and the diesel-generator set shall accelerate to specified frequency and voltage within the required time interval.

Step 2

- Immediately following Step 1, the diesel-generator set shall accept a single-step load consisting of the main HPCS pump motor load (fully loaded) or larger motor load (fully loaded) and additional loads (inductive and/or resistive) as required to total at least 100 percent of the continuous rating of the diesel-generator unit.

- At least 90 percent of these tests shall be performed with the diesel-generator set initially at "warm standby", based on jacket water and lube oil temperatures at or below values recommended by the engine manufacturer. After load is applied, the diesel-generator set shall continue to operate until jacket water and lube oil

temperatures are within plus or minus 10 F (5-1/2 C) of the normal engine operating temperatures for the corresponding load.

- The other 10 percent of these tests shall be performed with the engine initially at normal operating temperature equilibrium (defined as jacket water and lube oil temperatures as established by the engine manufacturer for the corresponding load).

(iv) If the cause for failure to start or accept load in accordance with the preceding sequence falls under any of the categories listed below, that particular test may be disregarded, and the test sequence resumed without penalty following identification of the cause for the unsuccessful attempt:

- Unsuccessful start attempts which can definitely be attributed to operator error including setting of alignment control switches, rheostats, potentiometers, or other adjustments that may have been changed inadvertently prior to that particular start test.

- A starting and/or load test performed for verification of a scheduled maintenance procedure required during this series of tests. This maintenance procedure shall be defined prior to conducting the start and load acceptance qualification tests and will then become a part of the normal maintenance schedule after installation.

- Failure of any of the temporary service systems such as dc power source, output circuit breaker, load, interconnecting piping and any other temporary setup which will not be part of the permanent installation.

- Failure to carry load which can be definitely attributed to loadings in excess of required loading.

5. Conformance With Regulatory Guide 1.9, Rev. 3

Conformance with Regulatory Guide 1.9 is described in the following subsections for each regulatory position of Paragraph C of the guide.

(a) Regulatory Guide 1.9, Position 1.2 Conformance

RG1.9 (3/10/71) EDG design criteria required calculating of continuous load ratings to be equal to or greater than the sum of conservatively estimated loads needed to be powered at any one time in absence of actual loads such as during the construction phase.

RG 1.9, Rev. 2, Position 1 referred to IEEE Std 387-1977 Section 3.7.1 design criteria for continuous ratings which exceeded the maximum predicted operating loads based on IEEE 387-1977 design criteria in accordance with Safety Evaluation Report (SER) 8.3.1.

GGNS meets (with exceptions) FSAR Sections RG 1.9, Rev. 3, Position 1.2, which requires conformance with (IEEE Std 387-1984 Section 3.7.1) equal to the sum of estimated loads (nameplate) needed to be powered by the unit at any one time plus a 10 to 15% margin. (See FSAR Sections 8.3.1.2.1.a.4, 8.3.1.1.4.1.c and 3A/1.9-1).

(b) Regulatory Guide 1.9, Position 1.3 Conformance

FSAR Section 8.3.1.2.1.a.5(b) Conformance to RG 1.9, Position 2 and supporting site A/C electrical calculations currently describes RG 1.9 (3/10/71) criteria for predicted loads to meet a 2000 hour rating for DIV 11, 12, & 13 EDG, 90% of 30 minute rating and the maximum coincidental load for conformance to this position. RG 1.9, Rev. 2 requires conformance with IEEE Std. 387-1977 and RG 1.9, Rev. 3 requires conformance with IEEE Std. 387-1984. Required criteria for continuous load rating for EDGs indicated by both IEEE Std. Revisions is based on the output capability of the

EDGs unit to maintain in the service environment for 8760 hr of operation per (common) year with only scheduled outages for maintenance.

The continuous ratings currently meet RG 1.9, Rev. 3 Position C.1.3 defined by IEEE Std. 387-1984.

(c) Regulatory Guide 1.9, Position 1.4 Conformance

RG 1.9 (3/10/71) and RG 1.9, Rev. 2, Regulatory Position C.4 required that at no time during loading sequence should the frequency decrease to less than 95% of nominal and voltage decrease to less than 75% of nominal. Per Safety Evaluation Report (SER) Supplement 7 Section 8.3.1 and exemption was requested to defer meeting the requirement for the HPCS Diesel Generator undervoltage protection until startup following the first refueling outage.

Per AECM-84/0326 dated July 3, 1984 a commitment was made in response to Technical Specification Problem Sheet (TSPS) #373 to provide a second level of voltage protection for the HPCS Diesel Generator since Division 3 contained loss of voltage protection at 72% undervoltage Exception to RG 1.9.C.4 (3/10/71) was included in FSAR 3A pending completion of the design changed described by AECM-84/0326. A Tech Spec change was also implemented which added surveillance requirements for the additional undervoltage protection functions following completion of the design change.

The design of the HPCS Diesel Generator conforms with the applicable sections of IEEE criterial for Class IE "Electrical Systems for Nuclear Power Generation Stations,"IEEE Std. 308-1971. In addition, a prototype test in accordance with Regulatory Guide 1.6 was performed. The generator has the capability of providing power for starting the required loads with operationally acceptable voltage and frequency recovery characteristics. A partial or complete load rejection will not cause the diesel engine to trip on overspeed.

(d) Regulatory Guide 1.9, Position 1.5 Conformance

RG 1.9, Rev. 3 Position C.1.5 requires that EDG units meet design criteria of RG 1.9, Rev. 3 Position 2, "Diesel Generator Testing." Criteria for EDG load demands and failures are appropriately addressed by plant procedures and administrative controls. EDG testing requirements described by Position 2 are accomplished in accordance with Technical Specifications and Bases The units are designed to automatically override the testing mode and return to the emergency mode upon receipt of initiation signals. See FSAR 8.3.1.1.4.1.i for additional details).

(e) Regulatory Guide 1.9, Position 1.6 Conformance

RG 1.9, Rev. 3 Position C.1.6 requires that EDG units are capable of being tested independently of the redundant units and that test equipment should not cause a loss of independence between the redundant units or between the EDG load groups. In accordance with FSAR Section 8.3.1.1.4.1 each division, including the EDG, its auxiliary systems, and the distribution of power to various safety features loads through the 4.16 kV and 480 volt systems, is separated from every other system division and no interconnections are provided between the various ESF divisions. Each EDG is operated independently and normal surveillance testing is performed only with a single generator set at a time.

Surveillance testing of DIV 11 and 12 EDGs would be automatically terminated by an interlock design function upon receipt of actual Loss of Offsite Power (LOOP) or Loss of Coolant Accident (LOCA) initiation signals and the EDGs would return to the safety function ready to load status.

During LOCA conditions the DIV 13 EDG would also return to ready to load status.

Calibration and surveillance requirements are governed in accordance with Technical Specifications.

(f) Regulatory Guide 1.9, Position 1.7 Conformance

The following positions supplement IEEE Std 387-1984 Section 5.5.3.1, "Surveillance Systems" pertaining to status indication of Emergency Diesel Generator (EDG) unit conditions.

Regulatory Guide 1.9, Position 1.7.1

Position 1.7.1 requires a surveillance system with remote indication in the control room for displaying EDG unit status, i.e., test mode, standby mode, lockout and also a means of communication between EDG unit testing locations and the main control room. Control room annunciation functions for the EDG are described by FSAR Section; 8.3.1.1.4.1.f and other design configuration documents. Plant surveillance procedures require establishing suitable communications between operators stationed at the remote and local EDG panels during testing.

Regulatory Guide 1.9, Position 1.7.2

Position 1.7.2 requires providing appropriate status indication to indicate which EDG emergency protective trips have been activated first in order to facilitate trouble diagnosis. FSAR Sections 8.3.1.2.1.a.4 and 8.3.1.1.4.2.10.1 describe the "first alarm" design capabilities of annunciators in which the first alarm is indicated by fast flashing and subsequent alarms by slow flashing.

(g) Regulatory Guide 1.9, Position 1.8 Conformance

The following positions supplement IEEE Std 387-1984 Section 5.5.4, "Protection" pertaining to bypassing Emergency Diesel Generator (EDG) protective trips during emergency conditions.

The EDG unit should be automatically tripped on an engine overspeed and generator-differential over-current. All other diesel generator protective trips should be handled in one of two ways:

(1) a trip should be implemented with two or more measurements for each trip parameter with coincident logic provisions for trip actuation, or

(2) a trip may be bypassed under accident conditions provided the operator has sufficient time to react appropriately to an abnormal diesel unit condition.

SER Supplement 7 Section 8.3.1 discusses EDG trip functions pertaining to the development of the EDG units to conform to RG 1.9, Rev. 2 Position 7 which corresponds to RG 1.9, Rev. 3 Position C.1.8. FSAR 8.3.1.1.4.1.f.2 describes the EDG DIV 11 and 12 protective trip systems functions during emergency operation in which the EDG is shutdown and the EDG breaker tripped only under the following conditions:

Engine overspeed
Generator differential

All other automatic shutdown functions are bypassed during emergency operation.

FSAR 8.3.1.1.4.2.10 describes the operation of protective devices for EDG DIV 13 during emergency conditions. Upon receipt of initiation signals during LOCA conditions, only the emergency protective devices are used. The emergency protective devices are:

Generator differential current
Engine overspeed

All other nonessential trips are blocked from tripping EDG DIV 13 during LOCA conditions.

Section 5.5.4 of IEEE Std 387-1984 also includes a requirement that all protective devices remain effective during diesel-generator unit testing or operation during non-accident conditions. However, EDG DIV 13 also bypasses the nonessential trips

(i.e., trips other than engine overspeed and generator differential current) on a loss of bus voltage event.

The design of the coincident logic trip circuitry was to include the capability for indication of individual sensor trips. The design of the bypass circuitry was to include the capability for (1) testing the status and operability of the bypass circuits (2) alarming in the control room for abnormal values of all bypass parameters and (3) manually resetting the trip bypass function.

The individual non-critical protective functions are tested in accordance with RG 1.9, Rev. 3 Position 2.2.12 and Technical Specifications. Control Room and local annunciation is provided for stated abnormal conditions and the trip bypass functions are manually reset following surveillance testing in accordance with plant procedures.

6. Conformance With Regulatory Guide 1.29

The HPCS electric system is capable of performing its function when subjected to the effects of design bases natural phenomena at its location. In particular, it is designed in accordance with the seismic Category I criteria and is housed in a safety class structure.

7. Conformance With Regulatory Guide 1.32

The design of the HPCS diesel generator conforms with the applicable sections of IEEE criteria for Class IE "Electrical Systems for Nuclear Power Generation Stations," IEEE Std. 308-1974. Note: HPCS Power Supply Topical Report NEDO-10905 describes prototype and reliability test requirements.

8. Conformance with Regulatory Guide 1.47 (Safety Guide 47)

All the bypassed trip devices provide alarms in the control room so that the operator will have sufficient information to take necessary corrective action.

9. Conformance with Regulatory Guide 1.53

   See the discussion of the degree of conformance for the HPCS system for which this is the power supply.

10. Conformance with Regulatory Guide 1.62

    Manual controls are provided to permit the operator to select the most suitable distribution path from the power supply to the load. An automatic start signal will override the test mode. Provision is made for control of the system, from the control room as well as from an external location.

11. Conformance with Regulatory Guide 1.75

    The HPCS diesel-generator is a Division 3 device and is separated from equipment of other divisions. There are no associated circuits. It is marked with a Division 3 name tag.

12. Conformance with Regulatory Guide 1.81

    One diesel generator is dedicated as a HPCS power supply. As noted in section 1.1.1, after Unit 1 had received its Commercial Operating License, Entergy Operations, Inc. formally requested the NRC to return the Construction Permit and officially cancel the second unit at the Grand Gulf Nuclear Station. The Construction Permit for Grand Gulf Unit 2 was revoked by the NRC in August 1991. Therefore, there is no sharing or interacting between units.

13. Conformance with Regulatory Guide 1.89

    See Section 3.11.2 for a discussion of the degree of conformance on level of qualification, as well as NEDO-10905.

14. Conformance with Regulatory Guide 1.93

    See the discussion for GDC 17 above at Section 8.3.1.2.1.b.1, NEDO-10905, and Appendix 3A.

15. Conformance with IEEE Std. 279-1971

    See Section 7.3 for compliance of the HPCS diesel generator with IEEE Std. 279-1971.

16. Conformance with IEEE Std. 308

    All the electric system components supplying power to the Class IE electric equipment are designed to meet their functional requirements under the conditions produced by the design-basis events. All the redundant equipment is physically separated to maintain independence and to minimize the possibility of a common mode failure. All Class IE equipment is located in seismic Category I structures.

    The Class IE equipment is uniquely identified by color coding of the components according to the division to which it is assigned, as detailed in subsection 8.3.1.1.1.

    Surveillance of the Class IE electric systems shall be in compliance with the standard, as are all other aspects applicable to the station design.

17. Conformance with IEEE Std. 344-1975

    The HPCS power supply unit components are seismically qualified to IEEE Std. 344-1975. Refer to Section 3.10.

18. Conformance with IEEE Std. 387-1984

    The HPCS power supply unit is completely independent of other standby power supply units and meets the applicable requirements of IEEE Std. 308.

    The HPCS diesel-generator unit is designed to:

    (a) Operate in its service environment during and after any design basis event without support from the preferred power supply.

(b) Start, accelerate, and be loaded with the design load within an acceptable time:

(i) From the normal standby condition

(ii) With no cooling available, for a time equivalent to that required to bring the cooling equipment into service with energy from the diesel-generator unit, and

(iii) On a restart with an initial engine temperature equal to the continuous rating, full load engine temperature.

(c) Carry the design load for 2000 hours.

(d) Maintain voltage and frequency within limits that will not degrade the performance of any of the loads composing the design load below their minimum requirements, including the duration of transients caused by load application or load removal.

(e) Withstand any anticipated vibration and overspeed conditions. The generator, flywheel, and exciter are designed to withstand 25 percent overspeed without damage.

(f) The HPCS diesel generator is operated either in isochronous or droop mode. When the diesel generator is in independent operation the governor is in isochronous mode. When the diesel is in parallel operation with the normal power supplies it is automatically placed in droop mode.

The HPCS diesel generator has continuous and short-term ratings consistent with the requirements of IEEE-Std. 387-1984, Section 5.1.

Mechanical and electric system interactions between the HPCS diesel-generator unit and other units of the standby power supply, the nuclear plant, the conventional plant, and the Class IE electric systems are coordinated so that the HPCS diesel-generator units design function and capability are realized for any design basis event, except failure of the HPCS diesel-generator unit.

19. Compliance with IEEE 323

    The qualification requirements of IEEE-323 are considered fulfilled by test and on operating experience on similar equipment in similar environment in other plants.

c. Reactor Protection System (RPS) Power System

The RPS power system is not an engineered safety feature, component, or system. The system itself fails in a fail-safe mode. That is, it de-energizes and thus causes a shutdown action. However, design considerations are taken to ensure power supply availability commensurate with the needs of the equipment serviced by it. Redundant channeling arrangement ensures a high degree of availability.

8.3.1.2.2 Quality Assurance Requirements

Bechtel, as the Applicant's agent, provided a planned quality assurance program in Chapter 17 of the PSAR. This program includes a comprehensive system to ensure that the purchased material, manufacture, fabrication, testing, and quality control of the equipment in the emergency electric power system conforms to the evaluation of the emergency electric power system equipment vendor quality assurance programs and preparation of procurement specifications incorporating quality assurance requirements. The administrative responsibility and control provided are also described in Chapter 17 of the PSAR.

These quality assurance requirements include an appropriate vendor quality assurance program and organization, purchaser surveillance as required, vendor preparation and maintenance of appropriate test and inspection records, certificates and other quality assurance documentation, and vendor submittal of quality control records considered necessary for purchaser retention to verify quality of completed work.

A necessary condition for receipt, installation, and placing of equipment in service has been the sighting and auditing of QA/QC verification data and the placing of this data in permanent onsite storage files.

8.3.1.2.3 Electrical Cable Installation

a. Cable Derating and Cable Tray Fill

Base ampacity rating of cables was established as published in IPCEA P-46-426 and IPCEA-P-54-440, 1972 and in accordance with the manufacturer's standards. To this basic rating, a grouping derating factor was applied in accordance with IPCEA-P-46-426, and IPCEA-P-54-440, 1972.

Electrical cables of a discrete Class IE electric system division were installed in a cable tray system provided for the same division. Cables were installed in trays in accordance with their voltage ratings and as described in subsection 8.3.1.4.1. Tray fill is generally limited to 40 percent by cross-section for power and control cables and 60 percent for trays carrying instrumentation circuits of extremely low power. In the case of the medium voltage power cables, a minimum separation of one quarter of the cable diameter was maintained. Also, power cables are reviewed for insulation integrity and continuity after installation. Conduit fill is generally in accordance with the provisions of Chapter 9 of the National Electrical Code, 1975.

b. Cable Routing in Hostile Areas

Circuits of different safety divisions are not routed through hostile areas, with the exception of main steam isolation and fail-safe RPS circuits which are exposed to possible steam line break and turbine missiles, respectively. The drywell is not considered a hostile area because of the application of pipe whip and other restraints, and the ability of the cable, as verified by actual test, to sustain all DBE environmental conditions.

c. Sharing of Cable Trays

The two BOP and each of the three divisions of Class IE electric systems are provided with an independent raceway system. Raceway systems between Class IE divisions or between Class IE division and BOP division are not shared. Additionally, BOP divisions are not generally shared. Also, each division of the RPS is provided with an independent totally enclosed metallic raceway system which is not shared by any other electrical system.

d. Cable Fire Protection and Detection

The areas of the control room, diesel-generator rooms, cable-spreading rooms, inside control boards, and penetration areas have smoke detectors, fire alarms, inert gas blanketing, and water fire protection as described in subsection 9.5.1.

e. Cable and Cable Tray Markings

All cables (except lighting and nonvital communications) are tagged at their terminations with a unique identifying number. In addition, the outer jacket of all cables is color coded to identify its safety division.

The following colors are used for identification:

Yellow - Division 1

Blue - Division 2

Green - Division 3

Orange - Division 4*

Yellow/black stripe - Division 1 - associated

Blue/black stripe - Division 2 - associated

Green/black stripe - Division 3 - associated

Orange/black stripe - Division 4 - associated

Black - Non-safety related (nondivisional)

A deviation from this color code has been allowed for the following cables, which are non-safety related:

1DA903-1 (green jacket)

1K01N44F (gray jacket)

---

*Division 4 is defined in FSAR subsection 7.2.1.1.4, Tables 7.1-10 and 7.1-11.

All the above cables have been tagged approximately every 15 feet with the legend "THIS CABLE IS IN SERVICE AS A NON-Q CABLE".

A deviation from this color code has been allowed for the following cables, which are non-safety related:

1KC20C34A, 1KC20C34B, 1KC20C34C, 1KC20C34D, 1KC20C34E, 1KC20C34F, 1KC20C34G, 1KC20C34H,
1KC20C34J, 1KC20C34K, 1KC20C34L, 1KC20C34M, 1KC20C34N, 1KC20C34P, 1KC20C34R, 1KC20C34S
1KC21C34A, 1KC21C34B, 1KC21C34C, 1KC21C34D, 1KC21C34E, 1KC21C34F, 1KC21C34G, 1KC21C34H,
1KC21C34J, 1KC21C34K, 1KC21C34L, 1KC21C34M, 1KC21C34N, 1KC21C34P, 1KC21C34R, 1KC21C34S

All the above cables are routed in the Turbine Building through dedicated conduits.

A deviation from this color code has been allowed for the following, which are non-safety related:

Wiring associated with the reference cells in the SSW 'A' and 'B' basins and junction boxes 1R62P275, 1R62P276, 1R62P277, 1R62P278 have yellow jacketed cables. These cables are non-safety related, which is part of the SSW basins cathodic protection system.

One general exception to these color coding requirements is the installation of networking and fiber optic communications cables. These applications are non-divisional, non-safety related functions, however, the cable types utilized are typically supplied with jacket colors such as blue, orange, etc. Cables installed for these applications are identifiable as non-divisional, non-safety related, and are routed in non-safety related, non-divisional raceways.

All raceways have a colored numbered marker applied that matches the color (cable jacket) of the particular division cables that are installed. For example, yellow tray numbers and markers will carry yellow colored cables and yellow cables/black stripes.

f. Spacing of Wiring and Components in Control Boards, Panels, and Relay Racks

Separation is accomplished by mounting the redundant devices or other components on physically separated control boards if, from a plant operational point of view, this is feasible. When operational design dictated that redundant equipment be in close proximity, separation was achieved by a fire retardant barrier or by a maintained air space. Each circuit or group of redundant circuits which serves the same protective or control function enters the control panel through separated apertures and terminates on separate blocks. Where redundant circuits ultimately terminate on the same device, barriers are provided between the device terminations to ensure circuit separation. Extensive use of approved isolators (generally optical) has been made.

8.3.1.2.3.1 Electrical Penetration Assembly

Electrical penetration assemblies of different ESF divisions are separated by areas, barriers, and/or by location on separate floor levels. All electrical penetrations are purchased to the requirements of IEEE-317 (1972). Fiber Optic penetration assemblies are purchased to the requirements of IEEE 317-1983.

Grouping of circuits in penetrations is identical to tray groupings. Penetrations are protected against overcurrent by redundant overcurrent devices.

Every class and type of circuit passing through these penetrations are identified and analyzed to ascertain that two separate and independent levels of overcurrent protection (primary and backup) are provided, where needed, for protection of the penetrations in accordance with Regulatory Guide 1.63. Objective data in the form of time-current coordination curves, tabulations, analyses, and calculations are available.

Those protective devices procured under IEEE-323 (1974) have been qualified for use at GGNS. The remaining protective devices will be tested on initial installation and then periodically thereafter to guarantee proper performance.

a. The following types of electrical circuits penetrate the containment:

(1) Medium voltage power: 3Ø, 7.2 kV

(2) Low voltage power: 3Ø, 480 volt

(3) Low voltage control and signal power: 1Ø, 208/120 volt, 3Ø, 480 volt

(4) Low voltage control and signal power: 1Ø, 120 volt with 150 volt-amp (control power transformer) maximum source

(5) Low voltage control power: 125 volt dc

(6) Instrumentation circuits using electronic power supplies

(7) Instrumentation circuits which generate their own signal (e.g., thermocouples)

(8) Low voltage power: 15 Hz, 3Ø, 600 V

b. For the types of circuits described in a, the fault-current-versus-time for which the primary and backup protection systems and penetrations are designed and qualified, and the coordination curves are described below:

(1) Categories a(6) and a(7) are not discussed further because they are inherently self-limiting and of such low power to be of no concern. Any instrumentation circuits with sufficient energy to damage a penetration are covered by (4) below.

(2) Category a(1) is a singular case, limited to the reactor recirculation pumps. For this application, redundant Class IE circuit breakers are provided.

(3) Category a(2) represents power feeders from either a load center or a motor control center. In this case, the primary protection is a 3-pole breaker which may be either Class IE or BOP The backup protection is a Class IE current-limiting "fuse-like device" (i.e., Gould MSCP). Performances of these two interrupting

devices, the feeder cable, and the penetration conductor are shown in figures maintained on file at GGNS for the various circuits of different ampacity. The time-current characteristic curves for the MSCP fuses were obtained from the Chase-Shawmut Co. (now Gould, Inc., Electric Fuse Division) Graph No. 716B. The time-current characteristic curves for the cables, penetrations, and pigtails were generated from the following formula which was obtained from IPCEA P-32-382:

$$\left[\frac{I}{A}\right]^2 = \frac{0.0297 \log\left[\frac{T_2 + 234}{T_1 + 234}\right]}{t}$$

where I = short circuit current in amperes

A = conductor area in circular mils

t = time of short circuit in seconds

T_1 = maximum operating temperature (90°C used)

T_2 = maximum short circuit temperature (250°C used)

(4) Categories a(3) and a(5) are essentially the same. The source of control or signal power is either a 120 V ac distribution panel, a 125 V dc distribution panel, or a control transformer larger than 150 VA. The exceptions are the 480 V control for the start-up range detectors which is derived from a motor control center, and a singular case of a #12AWG 480 volt circuit subfed from a #8 AWG circuit. Penetration protection for these circuits is provided by a combination of two protective devices in series. These devices may be either molded case breakers or fuses and are located either at the source or some point downstream (control panel, etc.).

This configuration is the most frequent and involves both NSSS and BOP equipment whereas none of the 3-phase equipment under a(1) and a(2) is supplied by the NSSS vendor.

(5) Category a(4) is provided with a single fuse of the appropriate size for the sole purpose of protecting the control power transformer (CPT). The largest CPT used in this application is rated at 150 volt-amps. Calculations and analysis show that a short circuit on the secondary of this CPT with no overcurrent protection whatsoever cannot exceed 30A. At this value a #12 AWG penetration conductor, the minimum size used with a 150 VA CPT, will not suffer damage. The CPT would fail almost immediately with resulting loss of its combination starter.

(6) Category a(8) is a singular case, that being the low frequency motor generator supply to the reactor recirculating pumps. The size of the motor generator sets (250 kVA) relative to the penetration conductors (1000 MCM) precludes the possibility of damage to the penetration from this source.

c. The backup protection "fuse-like devices" are all Class IE and are subject to the requirements of IEEE-323 (1974). The vendor has specified and certified in his document ITES S.O. #84-56310 (QS-27.0-4-0) the necessary 40-year surveillance and testing to guarantee proper performance over the design lifetime for the installed equipment. Testing under simulated fault conditions is not performed.

The primary protection circuit breakers are checked preoperationally and calibrated in place for over-current performance. These breakers, both Class IE and non-Class IE, will be checked periodically in accordance with surveillance procedures to assure their set points have not changed.

Testing to potentially destructive fault-current levels on which the fundamental breaker design is predicated is not contemplated. This is intrinsic to the individual breaker manufacturer's qualification to industry standards and could not be accomplished on the installed systems where only the breakers and fuses are service items. Checks,

such as megger tests, will be performed routinely to guarantee satisfactory performance of the nonservice items such as the cable and penetrations under fault conditions.

8.3.1.2.4 Test Documentation to Qualify Electrical Equipment in Hostile Environments

All electrical equipment which must operate in an abnormal environment has been qualified by actual test to such an environment. The directives governing these also are:

IEEE Std. 317	Electrical Penetration Assemblies
IEEE Std. 323	Class IE Equipment in Nuclear Power Generating Stations
IEEE Std. 324	Continuous Duty Class IE Motors
IEEE Std. 382	Class IE Electric Valve Operators
IEEE Std. 383	Class IE Cables, Splices and Connectors
IEEE Std. 387	Diesel Generator Standby Power Supplies

Summation of the test results is given in Sections 3.9, 3.10, and 3.11.

8.3.1.3 Physical Identification of Safety-Related Equipment

Equipment of each division of the Class IE electric system and various RPS divisions are identified as follows:

The background of the nameplate for the equipment of a division has the same color as the cable jackets and the raceway markers associated with the same division. Also, major HPCS equipment is identified by a "Nuclear Safety" engraved nameplate and its related electrical division number.

8.3.1.4 Independence of Redundant Systems Through Physical Arrangement

8.3.1.4.1 Class IE Electric Equipment Arrangement

a. Electrical equipment and wiring for the Reactor Protection System, Nuclear Steam Supply Shutoff System, and the engineered safeguards subsystems, is segregated into separate divisions designated 1, 2, etc., so that no single credible event is capable of disabling sufficient equipment to prevent reactor shutdown, removal of decay heat from the core, or to prevent isolation of the containment in the event of an accident. Separation requirements were applied to control power and motive power for all systems concerned. In addition, the distance between the electrical portions of the HPCS and RCIC systems is maximized within the space available.

b. Arrangement and/or protective barriers are such that no locally generated force or missile can destroy any redundant RPS, NSSS, or ESF functions. In addition, arrangement and/or separation barriers shall be provided to ensure that such disturbances do not affect both HPCS and RCIC. In the absence of confirming analysis to support less stringent requirements, the following rules apply:

   (1) In rooms or compartments having heavy rotating machinery, such as the main turbine generator, or the reactor feed pumps; or in rooms containing high-pressure feedwater piping or high-pressure steam lines such as those between the reactor and the turbine, a minimum of a 2-foot-thick concrete wall is required between trays or exposed conduit containing cables of different divisions. This requirement is not intended to categorically exclude convergence of circuits of different divisions to a single piece of equipment or area provided that the malfunctioning of all circuits in the area of question cannot disable any associated protective function.

   (2) Switchgear associated with redundant safety systems and located in a potential mechanical damage zone such as discussed above, must be separated by a protective wall equivalent to a 2-foot-thick concrete wall.

(3) In any compartment containing an operating crane, such as the turbine building main floor and the region above the reactor pressure vessel, there must be a minimum of a 2-foot-thick concrete wall between trays containing cables of the two divisions.

c. Arrangement of wiring/cabling is such as to eliminate, insofar as practical, all potential for fire damage to cables and to separate the RPS, NSSS, and ESF divisions so that fire in one division will not propagate to another division. In addition, arrangement of wiring and cabling of the HPCS and RCIC systems ensures that both systems are not disabled by a single fire In the absence of confirming analysis to support less stringent requirements, the following general rules were followed:

(1) Routing of cables for RPS, NSSS, and ESF control of power through rooms or spaces where there is potential for accumulation of large quantities (gallons) of oil or other combustible fluids through leakage or rupture of lube oil or cooling systems should be avoided. Where such routing is practically unavoidable, only one division of RPS NSSS, or ESF cables is allowed in any such space.

(2) In any room or compartment other than the cable spreading room in which the primary sources of fire are of an electrical nature, cable trays of redundant systems have a minimum horizontal separation of 3 feet if no physical barrier exists between trays. If a horizontal separation of 3 feet is unattainable, a fire resistant barrier is required. Totally enclosed metallic raceways or metallic raceways with covers may be used in lieu of barriers with open cable trays until the minimum separation can again be maintained. A minimum separation distance of 1 inch is maintained whenever barriers, totally enclosed raceways, or tray covers are used.

(3) In any room or compartment other than the cable spreading room in which the primary source of fire is of an electrical nature, cable trays of redundant systems have a minimum vertical separation of 5 feet between horizontal trays stacked vertically or crossed one above the other; however, vertical or cross

stacking of trays is avoided whenever possible. In cases where the redundant trays must be run stacked or crossed one stacked above the other, and when the trays do not meet the 5-foot vertical separation requirement, a fire barrier was installed between the redundant trays. Totally enclosed metallic raceways or metallic raceways with covers may be used in lieu of barriers with open cable trays until the minimum separation can again be maintained. A minimum separation of 1 inch is maintained whenever barriers, totally enclosed raceways, or tray covers are used.

(4) Any openings in floors or walls for vertical or horizontal runs of RPS, NSSS, or ESF cables must be sealed with fire resistant material.

Reduced spatial separation distances less than those specified above are contained in Table 8.3-13 for Grand Gulf specific configurations.

d. The minimum horizontal and vertical separation and/or barrier requirements in the cable spreading room are as follows:

(1) Where cables of different separation divisions approach the same or adjacent control panels with vertical spacing less than the 3 feet minimum, at least one cable separation division shall be run in totally enclosed metallic raceway or a barrier provided to a point where 3 feet of separation exists.

(2) A minimum horizontal separation of 1 foot is required between trays containing cables of different separation divisions if no physical barrier exists between trays. If a horizontal separation of 1 foot is not attainable, either a fire resistant barrier is required or a totally enclosed metallic raceway or metallic raceway with covers will be utilized to meet separation requirements.

(3) Vertical stacking or crossing of trays carrying cables of different divisions is avoided wherever possible; otherwise there is a minimum vertical separation of not less than 3 feet between trays carrying cables of different divisions.

(4) If vertical stacking or crossing of redundant trays of different divisions is necessary and the minimum 3-foot vertical separation cannot be maintained, a fire barrier is installed between the trays. Totally enclosed metallic raceways or metallic raceways with covers may be used in lieu of the barrier with open cable tray until the minimum separation can be maintained. A minimum separation of 1 inch is maintained whenever barriers, totally enclosed raceways, or raceways with covers are used.

Reduced spatial separation distances less than those specified above are contained in Table 8.3-13 for Grand Gulf specific configurations.

e. An independent raceway system is provided for each division of the Class IE electric system. The trays are arranged top to bottom based on the cable rated voltage:

6.9 kV power (9000 volt insulation class)

4.16 kV power (9000 volt insulation class)

Large 480 volt power (1000 volt insulation class)

480 volt power and control (600-1000 volt insulation class)

Instrumentation cables (600 volt insulation class)

8.3.1.4.2 Control of Compliance With Separation Criteria During Design and Installation

Compliance with the criteria which preserve independence of redundant systems is a supervisory responsibility during both the design and installation phases. The responsibility is discharged by:

a. Identifying applicable criteria.

b. Issuing working procedures to implement these criteria.

c. Modifying procedures to keep them current and workable.

d. Checking manufacturing drawings and specifications to ensure compliance with procedures.

e. Controlling installation and procurement to assure compliance with approved and issued drawings and specifications.

The equipment nomenclature used on Grand Gulf is the primary mechanism for ensuring proper separation. Starting with a complete identification of all equipment, each item is identified as essential or nonessential and assigned a "Q" or "N" character in its nomenclature. Each essential item is further identified to its safety separation division by an identifying alphabet character, which is generally the last character in the total alphanumeric group. The nomenclature must, of necessity, vary slightly between NSSS and BOP equipment and between different types of equipment. For example, the identifying nomenclature on electrical distribution equipment contains characters which identify voltage levels not necessary in instrument identification. In every case it is possible to determine the quality group and separation classification of equipment from the engineering drawings and specifications. This is carried through and dictates appropriate treatment at the design level during preparation of manufacturing drawings.

GGNS takes the following position for clarification with respect to physical separation provided for Class 1E cabling and raceway: GGNS standards implement physical separation for Class 1E cabling and raceways on a divisional basis. Specifically, each division of Class 1E cabling and raceway is separated from all other safety related divisions in accordance with specific separation distance or barrier provisions relating to the area of consideration. This methodology very conservatively assumes that any interactions between different safety related divisions may result in loss of required safety functions, without further consideration of functional redundancy or diversity. Regulatory Guide 1.75, however, is based on maintaining separation such that no single credible event will prevent accomplishment of required safety functions, after consideration of functional redundancy or diversity. Thus, regulatory compliance for separation may be maintained without necessarily meeting GGNS specific standards. Conformance of physical installations to the divisional separation methodology is maintained to ensure consistency with GGNS established mechanisms for identification and marking of circuits and raceways.

Nonessential equipment has been separated where it was desired to enhance power generation reliability, but such separation is not a safety consideration. This was accomplished by administratively directing use of raceway systems "D" and "E" as described in subsection 8.3.1.2.3 to separate critical companion BOP installations such as the condensate pumps.

Once the safety-related equipment has been identified to an essential safety division, the nomenclature dictates a characteristic color, described in subsections 8.3.1.2.3e and 8.3.1.3 for positive visual identification. Likewise, all ancillary equipment, cable and raceways associated must match the nomenclature of the system it supports.

There are certain explicit exceptions to the above where equipment which is not safety-related is connected to essential power sources for functional design reasons. Two separate means have been employed to deal with this situation:

a. The circuits feeding the equipment are designated "associated" per Regulatory Guide 1.75. Cable used to connect such equipment is safety grade and qualified and routed as "associated circuits." It is marked as described in subsection 8.3.1.2.3.

b. The circuits feeding the equipment are designated non-Class IE per Regulatory Guide 1.75. Cable used to connect such equipment is routed in non-Class IE raceway and is not qualified to Class IE requirements. However, this cable is physically and electrically identical to Class IE cable but no certifying documentation was requested. The cable is black as described in subsection 8.3.1.2.3.

In both instances, the equipment is disconnected and locked out by a LOCA signal except as discussed in Appendix 3A under Regulatory Guide 1.75 exceptions.

8.3.2 DC Power Systems

8.3.2.1 Description

The sets of Class IE dc systems are shown on Figure 8.3-10. The high voltage switchyard and radial well complexes utilize the batteries previously intended to be shared by Units 1 & 2 and are presented on an individual basis.

8.3.2.1.1 Station DC Power

The following 125-volt dc station batteries are provided to supply normal and emergency dc power:

Battery Designation

1A (Class IE)

1B (Class IE)

1C (Class IE)

1D

1E

1K

1L

1G, 2G Radial Well Complex

1,2 Switchyard

The dc power systems provide adequate power for station emergency auxiliaries and for control and switching during all modes of operation.

The 125 volt dc systems provide reliable control and switching power to the Class IE and non-Class IE electric systems.

The 250 volt dc system, 1F, serves large non-Class IE auxiliary loads. The 250 volt dc power source is created by a series connection of the two 125 volt dc non-Class IE batteries K and L.

[HISTORICAL INFORMATION] [All batteries are sized to maintain the required capacity at 80 percent of nameplate rating, corresponding to warranted capacity at end-of-life-cycles and the 100 percent design demand. The voltage design limit is 1.75 volts per cell. The Class IE 125 volt dc batteries A and B are provided with two chargers, each of which is capable of recharging its battery from a minimum discharged state in 12 hours while supplying the largest combined demand of the various steady-state dc loads.] Each non-Class IE dc battery is also provided with two chargers. Both chargers, in parallel, are required to recharge the batteries from their minimum discharged

state within 12 hours while handling the normal steady-state dc loads. The HPCS battery and charger system is discussed in subsection 8.3.2.1.7.

Battery sizes are as shown on Figures 8.3-10, 8.3-10a, and 8.3-10b.

8.3.2.1.2 Radial Well Complex

[HISTORICAL INFORMATION] [Two 125 volt dc batteries rated 100 amp-hr service are provided to supply the radial well demand. Two redundant chargers are provided for each battery.]

8.3.2.1.3 Switchyard Batteries

The 125 and 48 V dc switchyard batteries are described in subsection 8.2.1.2.

8.3.2.1.4 Turbine Control Battery

Four 24 volt dc batteries are provided and so connected as to provide two ±24 volt dc power supplies for the main turbine electrohydraulic control (EHC) system. Four 24 volt chargers are provided to automatically float these batteries and recharge them. These batteries perform no safety function but are required for the normal operation of the turbine.

8.3.2.1.5 Engineered Safety Features, DC Loads

[HISTORICAL INFORMATION] [The 125 volt dc power is required for emergency lighting; diesel generators field flashing; control and switching functions such as control of 6.9 kV, 4.16 kV, and 480 volt breakers; control relays; annunciators, and the Class IE inverters as well as power to dc components used in the RCIC system. There are no non-Class IE Loads connected to the Class IE dc system except those listed in Table 8.3-12.

The three divisions that are essential to the safe shutdown of the reactor are supplied from three independent 125 volt dc systems, A, B, and C. Tables 8.3-6, 8.3-7, and 8.3-8 list the 125 volt dc loads required for the three divisions.]

8.3.2.1.6 Station Batteries and Battery Chargers, General Considerations

[HISTORICAL INFORMATION] [Each of the 125 volt dc systems (A, B, D, E, K, and L) has a 125 volt dc battery, two battery chargers, a distribution center and at least one distribution panel. The non-Class IE 125 volt dc systems K and L are also connected in series at another distribution center to form the 250 volt dc system, F. Distribution panels are fed from 125 V dc distribution centers. The 125 volt dc batteries 1L and 1K are sized to meet the design intent of industry recognized installation and design standards in providing adequate capacity/output voltages to associated loads. The non-Class IE 125 volt dc systems K and L are primarily for supplying dc power to five inverters and Bus 11 DF.]

The 125 volt dc system C is described in subsection 8.3.2.1.7. Each 125 volt dc system (1G and 2G) at the radial well switch gear house has one 125 volt battery, two battery chargers, and one distribution panel. Together, the two systems supply dc control power for all the equipment in the radial well switchgear house.

[HISTORICAL INFORMATION] [The 125 volt dc systems A, B, and C are for supplying dc power to Divisions 1, 2, and 3, respectively, and are designed as Class IE equipment in accordance with applicable clauses of IEEE 308. They are designed so that no single failure in any 125 volt dc system will result in conditions that prevent safe shutdown of the plant. The plant design and circuit layout from these dc systems provide physical separation of the equipment, cabling, and instrumentation essential to plant safety.

Each 125 volt dc battery is separately housed in a ventilated room apart from its charger and distribution center. Each system is located in an area separated physically from other systems. All components of the Class IE 125 volt dc systems are housed in seismic Category I structures.

The safety-related battery chargers are of sufficient capacity to operate all non-accident shutdown loads, assuming the battery is not available. It should, however, be noted that the Division I and II battery chargers are suitable for use with or without the battery physically connected The Division III battery charger is designed for use with or without the battery physically connected. When operated as stated above, the Division I, II, and III battery chargers will maintain a stable output for all ranges of load.]

8.3.2.1.6.1 125 Volt DC Systems Identification

Figure 8.3-10 shows the Class IE 125 volt dc systems. Battery 1A3 feeds into a direct-current distribution center designated as 11DA. Two battery chargers 1A4 and 1A5, are fed from the 480 volt engineered safety features load center buses, 15BA3 and 15BA6, which are supplied by a diesel generator if the offsite power source is unavailable. The 125 volt dc system A is formed at the bus of distribution center 11DA, and the power is fed into distribution panels to serve various loads. System B is similar to system A, with the distribution center designated as 11DB, the battery as 1B3, battery chargers as 1B4 and 1B5, and 480 volt load centers as 16BB3 and 16BB6. The 125 volt dc system C identification is described in subsection 8.3.2.1.7.4.

8.3.2.1.6.2 Battery Capacity Considerations

[HISTORICAL INFORMATION] [Batteries 1A3 and 1B3 have sufficient stored energy to operate connected essential loads continuously for at least 4 hours and to perform three complete cycles of intermittent loads.] Tables 8.3-6 and 8.3-7 give loads to be supplied from the 125 volt dc systems during accident conditions. Each distribution circuit is capable of transmitting sufficient energy to start and operate all required loads in that circuit. Batteries 1A3 and 1B3 are sized in accordance with IEEE 485-1978.

The voltage at the safety-related dc battery terminals is designed to be maintained within the limit of 105 V dc to 140 V dc during all modes of plant operation, including the first 4 hours of accident conditions. The minimum acceptable battery terminal voltages per time interval to support essential component operability are provided in Tables 8.3-6 and 8.3-7.

All direct current equipment for Grand Gulf has been specified for operation over the range of 105 V dc to 140 V dc. Components whose qualifications can not meet this specified range are evaluated on a case by case basis. These values correspond respectively to the minimum design discharge voltage and the normal float voltage (plus margin) for the batteries. Due to voltage drop between the battery terminal and the individual components, actual voltages at the individual components will be below the battery terminal voltage. Unless qualified by field testing, all essential components will be qualified by the manufacturer for the calculated limiting voltage supplied to the equipment. It should be noted that the lead calcium type of

batteries utilized on Grand Gulf are designed to be operated at a nominal float voltage of between 132 and 135 V dc without requiring a periodic equalizing charge. Equalizing charges are performed if an inspection or test finds the battery cell voltage or specific gravity readings are below that as indicated in the Technical Specifications as a minimum. Equalizing charges are performed after battery service discharge test and battery performance discharge test.

8.3.2.1.6.3 Ventilation

Battery rooms are ventilated to remove the gases produced due to the charging of batteries.

The ventilation system for the Class IE batteries is Class IE and redundant.

8.3.2.1.6.4 Maintenance and Testing

All components of the 125 volt dc systems undergo periodic maintenance tests to determine the condition of each individual subsystem. Batteries are checked for electrolyte level, specific gravity and cell float voltage, and visually inspected following manufacturer's recommended procedures. The service test minimum load profiles and minimum acceptable battery terminal voltages for the A and B dc system batteries are contained in Tables 8.3-6 and 8.3-7. A performance discharge test will be given regularly to demonstrate the Class IE batteries have sufficient stored energy to supply the load demand discussed in section 8.3.2.1.6.2. Battery chargers are periodically checked by visual inspection and performance tests.

Testing is performed in accordance with the Technical Specifications, and will include requirements for measurement of cell-to-cell as well as terminal connection resistance.

8.3.2.1.6.5 Annunciators and Alarms

1. The Division I and II safety-related dc power supply systems are provided with directional, dual-range ammeters to allow the monitoring of battery current for both charging and discharging conditions. Refer to Figure 8.3-10 for further detail. The Division III safety-related dc power supply system is shown in Figure 8.3-13. As can be seen from the figure, the battery charger and the battery are connected through

breakers to the 125 V dc distribution bus. An ammeter is connected in series between the combined output of the battery and battery charger and the 125 V dc distribution Bus to allow the monitoring of 125 V dc current. An ammeter is also provided internal to the battery charger to monitor the charger output. This arrangement meets the intent of Regulatory Guide 1.47 (May 1973).

2. Neither the Division I, II, or III safety-related battery chargers are provided with annunciation of the current limiting mode.

3. Ambient temperature indication is provided for each safety-related battery room.

8.3.2.1.7 HPCS - Division 3 - ESF DC System

8.3.2.1.7.1 General

The objective of the 125 V dc power system (Division 3) is to provide a reliable, continuous, and independent 125 V dc power source of control and motive power as required for the HPCS system logic, HPCS diesel-generator set control and protection, and all Division 3 related control. Figure 8.3-13 shows the Division 3 125 V dc one-line diagram. A battery charger is provided for the battery. The Division 3 125 V dc system is classified as Class IE. The Division 3 125 V dc system is independent of all other divisional batteries and there is no manual or automatic connection to any other battery.

8.3.2.1.7.2 HPCS DC Loads

The 125 V dc power is required for HPCS diesel generator field flashing, control logic, and control and switching function of 4.16 kV breakers. Table 8.3-8 lists the Div 3 peak amperage requirements per time interval after ac power loss during accident conditions.

8.3.2.1.7.3 Battery and Battery Charger

[HISTORICAL INFORMATION] [The 125 V dc system for the HPCS power supply has a 125 V dc battery (100 Ah @ 8 hour), one battery charger, one spare battery charger provided for maintenance purposes only, and a distribution panel with molded case circuit breakers.

The 125 volt dc system is designed as Class IE equipment in accordance with applicable clauses of IEEE Std. 308. It is designed so that no single failure in the 125 volt dc system will result in conditions that prevent safe shutdown of the plant.] The plant design and circuit layout from these dc systems provide a physical separation of the equipment, cabling, and instrumentation essential to plant safety.

Figure 8.3-13 shows the association between the 125 volt HPCS battery and its chargers and distribution panel. The HPCS battery is located in its own ventilated room, and all the components of the system are housed in a seismic Category I structure.

8.3.2.1.7.4 125 Volt DC Systems Identification

The 125 volt dc system C for Unit 1 consists of battery 1C3 which feeds into dc distribution center 11DC. The battery charger is fed from 480 V Class IE MCC 17B01 which is supplied by the HPCS diesel generator if offsite power is unavailable. As shown on Figure 8.3-13, a spare charger is provided for maintenance purposes only. This charger (1C5) is fed from non-Class IE MCC 13B11 (Figure 8.3-10).

8.3.2.1.7.5 Battery Capacity

[HISTORICAL INFORMATION] [The ampere-hour capacity and short-time rating of the battery are in accordance with criteria given in IEEE Std. 308. This battery has sufficient stored energy to operate required connected essential loads for a minimum period of two hours following a loss of ac power to the battery charger. Capacity is large enough to cope with LOCA conditions or any other emergency shutdown. Each distribution circuit is capable of transmitting sufficient energy to start and operate all required loads in that circuit. The 125 volt battery is sized in accordance with the principles set out in IEEE Std. 308.]

8.3.2.1.7.6 Charging

[HISTORICAL INFORMATION] [The charger for the HPCS 125 volt dc systems is connected to a Class IE 480 volt motor control center and is capable of carrying the normal direct current system load and, at the same time, keeping the battery in a fully charged condition. The sizing of the battery charger meets IEEE Std. 308.

A spare battery charger, connected to a non-Class IE motor control center, is provided to allow maintenance to be performed on the normal supply charger. This spare battery charger is for maintenance only and is not sized in accordance with the requirements of subsection 8.3.2.2.1.]

8.3.2.1.7.7 Ventilation

Battery rooms are independently ventilated to keep the gases produced due to the charging of batteries below an explosive concentration.

8.3.2.1.7.8 Maintenance and Testing

The design of the installation facilitates the performance of maintenance and testing of all components of the 125 volt dc systems and each individual subsystem. Batteries are to be checked for electrolyte level, specific gravity, and cell float voltage. The service test minimum load profile and minimum acceptable battery terminal voltages for the battery is contained in Table 8.3-8. Performance discharge tests are to be conducted as required to demonstrate the Class IE batteries have sufficient stored energy to supply the load demand discussed in section 8.3.2.1.7.2. Battery chargers will also be periodically checked by visual inspection and performance tests.

Testing is to be performed in accordance with the Technical Specifications.

8.3.2.1.7.9 Test Requirements of Station Batteries

Provisions are made in the dc power systems so that surveillance and service tests may be performed in accordance with IEEE Std. 450.

8.3.2.2 Analysis

[HISTORICAL INFORMATION] [The 480 volt ac feeds to the battery chargers are from the individual Class IE load center or MCC within the division to which the particular 125 volt dc system is associated. In this way, separation between the independent systems is maintained and the power provided to the chargers can be from either offsite or onsite sources. The dc system is so arranged that the probability of an internal system failure resulting in loss of dc power is extremely low. Important system components are either self- alarming on failure or capable of being tested during service to

detect faults. Each battery set is located in its own ventilated battery room as shown in Figure 1.2-3. All abnormal conditions of important system parameters are annunciated in the main control room. There is no cross connection between the independent 125 volt dc systems.]

8.3.2.2.1 Compliance With General Design Criteria and Regulatory Guides

The design of 125 volt dc systems A, B, and C for the engineered safety features provided for this plant is based on the criteria described in IEEE Std. 308, IEEE Std. 450, and Regulatory Guide 1.47 (1973).

The 125 volt dc systems A, B, and C (including the power supply, distribution system, and load groups) are arranged to provide dc electric power for control and switching of the components of Class IE systems.

Batteries consist of lead-calcium storage cells, designed for the specific service in which they are to be used. Ample capacity is available to serve the loads connected to the system for the duration of the time the alternating current will not be available at the station site. Each division of Class IE equipment is provided with a separate 125 volt dc system so as to avoid a single failure involving more than one system.

Each battery charger has enough power-output capacity for the steady-state operation of connected loads required during normal operation while maintaining it battery in a fully charged state. Each Division 1 and Division 2 battery-charger has sufficient capacity to restore the battery from the design minimum charge, in 12 hours, to its fully charged state while supplying normal steady-state loads. The Division 3 battery-charger has sufficient capacity to restore the battery from the design minimum charge, in 8 hours, to its fully charged state while supplying normal steady-state loads. The battery-charger supply is from the engineered safety features system load center or MCC within the division. Indicators are provided to monitor the status of the battery-charger supply. This instrumentation includes indication of output voltage, output current, battery ground, and breaker position. Battery chargers are provided with disconnecting means and feedback protection. Periodic tests will be performed to

assure the readiness of the system to deliver the power required. A ground detector circuit provides indication of any grounds which occur in the system.

8.3.2.2.1.1 Quality Assurance

Quality assurance requirements are as described in Chapter 17.

8.3.2.2.1.2 Identification of Equipment

The 125 volt dc systems A, B, and C are required for the control and switching of safety systems; therefore, battery rooms are completely separate for each system and equipment, and cable and raceways are identified to indicate the division in which they belong. Identification follows the marking system described in subsection 8.3.1.2.3.

8.3.3 Fire Protection of Cable Systems

Fire protection of cable systems is designed into the installation rather than added onto the finished product. Fire protection defense-in-depth is accomplished by fire prevention, fire detection/suppression, and mitigation of consequences.

8.3.3.1 Fire Prevention

The probability of self-initiated fires can be reduced by derating cable and limiting cable tray fill, as discussed in subsection 8.3.1.2.3a. All cables have been tested to demonstrate "as a minimum" compliance with IEEE 383 or ICEA S-19-81 flame retardance tests, except these listed below:

Cable No.	Cable Code
1K16P33J	ILG
1K16P33K	ILG
1K16P33L	ILG
1K16P33M	ILG
1K16P33N	ILG
1K16P33O	ILG
1K16P33P	ILG
1K16P33Q	ILG
1K16P33R	ILG

Cable No.	Cable Code
1K16P33S	ILH
1K16P33T	ILG
1K16P33U	ILG
1K16P33V	ILG
1K16P33W	ILH
1K16P33X	ILG
1K16P33Y	ILJ
1K16P33Z	ILJ
1K17P33A	ILK
1K17P33B	ILL
1K17P33C	ILM
1K17P33D	ILM
1K17P33E	ILM
1K17P33F	ILN
1D1FG17R	MPL
1D1FG17S	MPL
Video Camera Cable	N/A

The cables listed above comprise less than 0.1 percent of the plant total. They are special vendor-supplied cables and are not available in a flame-tested version.

8.3.3.2 Fire Detection/Suppression

Detection and suppression of fires internal and external to the cable system are discussed in subsections 8.3.1.2.3d and 9.5.1, respectively.

8.3.3.3 Mitigation of Consequences

Fire barriers, tray separation, fire stops, and criteria and material qualifications lessen the consequences of fire, as discussed in subsection 8.3.1.4.1. Also, careful routing minimizes the number of redundant cables in the same fire areas.

TABLE 8.3-1: DELETED

TABLE 8.3-1: DELETED (Continued)

TABLE 8.3-2: DELETED

TABLE 8.3-2: DELETED (Continued)

TABLE 8.3-3: DELETED

TABLE 8.3-4: AUTOMATIC AND MANUAL LOADING AND UNLOADING OF ENGINEERED SAFETY FEATURES BUS (Sheet 1 of 9)

					Minimum Operating Requirement				
					Forced Shutdown		Loss-of-Coolant Accident		
Item Description	Number on Division	Redundant Equipment Identification	hp, KW, or kVA Each	Number Required	Time to Start (1)	Time to Stop	Number Required	Time to Start (1)	Time to Stop
DIVISION 1									
ENGINEERED SAFETY FEATURE LOADS									
Standby service water pump room O/A fan	1	Div 2 system	40 hp	1	10 sec (3)	(3)	1	10 sec (3)	(3)
LPCS pump motor	1	Div 2 system	2000 hp	---	---	---	1	0 sec	(4)
RHR A	1	RHR B Div 2	1000 hp	1	10 min (4)	(4)	1	5 sec	(4)
Standby service water pump	1	SSW Div 2	1250 hp	1	5 sec	(4)	1	10 sec	(4)
Diesel supply fan	1	Div 2 system	75 hp	1	5 sec (3)	(3)	1	10 sec (3)	(3)
Standby gas treatment fan	1	SGTS Div 2	20 hp	---	---	---	1	0 sec	(4)
Class IE battery charger	2	Div 2 system	100 kVA	1	0 sec	(4)	1	0 sec	(4)
Control room air conditioner and fan	1	CRAC Div 2	140 hp	1	10 sec	(4)	1	10 sec	(4)
Hydrogen recombiner	1	Div 2 system	75 kW	---	---	---	1	(4)	(4)
SSW cooling tower fans	2	SSW Div 2	150 hp	2	10 sec (3)	(3)	2	15 sec (3)	(3)
Enclosure building recirculation fan	1	Div 2 system	75 hp	---	---	---	1	5 sec	(4)
Drywell purge compressor	1	Div 2 system	100 hp	---	---	---	1	30 sec	(4)

TABLE 8.3-4: AUTOMATIC AND MANUAL LOADING AND UNLOADING OF ENGINEERED SAFETY FEATURES BUS (Continued) (Sheet 2 of 9)

					Minimum Operating Requirement				
					Forced Shutdown		Loss-of-Coolant Accident		
Item Description	Number on Division	Redundant Equipment Identification	hp, KW, or kVA Each	Number Required	Time to Start (1)	Time to Stop	Number Required	Time to Start (1)	Time to Stop
Diesel generator auxiliary lube oil pump	1	D/G Div 2	60 hp	1	0 sec (3)(6)	(3)	1	0 sec (3)(6)	(4)
Diesel generator jacket water pump	1	D/G Div 2	60 hp	1	15 sec (3)(6)	(3)	1	20 sec (3)(6)	(4)
Safeguard swgr and battery room heater	2	Div 2 system	125 kW	2	10 sec	(4)	2	15 sec (3)	(4)
Standby gas treatment heater	1	SGTS Div 2	48 kW	---	---	---	1	0 sec	(4)
Jockey pumps	2	Div 2 system	5 hp	2	0 sec (3)	(3)	2	0 sec (3)	(3)
Hydrogen igniters	Set	Div 2 system	6 kW Total	---	---	---	Set	(4)	(4)
Diesel generator fuel oil transfer pump	1	D/G Div 2	2.5 hp	1	0 sec (3	(3)	1	0 sec (3)	(3)
Safeguard swgr and battery room supply fan	2	Div 2 system	40 hp	2	0 sec (3)	(4)	2	0 sec (3)	(4)
Safeguard swgr and battery room exhaust fan	2	Div 2 system	30 hp	2	0 sec (3)	(4)	2	0 sec (3)	(4)
Control room lighting set	Set	Div 2 system	30 kVa Total	Set	0 sec (8)	(8)	Set	0 sec (8)	(8)
Lighting transformer	1	Div 2 system	15 kVA Total	Set	0 sec (8)	(8)	---	---	---

TABLE 8.3-4: AUTOMATIC AND MANUAL LOADING AND UNLOADING OF ENGINEERED SAFETY FEATURES BUS (Continued)
(Sheet 3 of 9)

					Minimum Operating Requirement				
					Forced Shutdown		Loss-of-Coolant Accident		
Item Description	Number on Division	Redundant Equipment Identification	hp, KW, or kVA Each	Number Required	Time to Start (1)	Time to Stop	Number Required	Time to Start (1)	Time to Stop
ECCS pump room coolers	3	Div 2 system	12 hp Total	3	0 sec (3)	(3)	3	0 sec (3)	(3)
ESF electrical room cooler fans	5	Div 2 system	9 hp Total	5	(3)	(4)	5	(3)	(4)
Control room emergency heater	1	CRAC Div 2	21 kW	---	---	---	1	0 sec	(4)
Control room emergency fresh air fan	1	CRAC Div 2	20 hp	---	---	---	1	0 sec	(4)
Power panel transformers	7	Div 2 system	30 kVA	7	0 sec (8)	(8)	6	0 sec (8)	(8)
Standby liquid control pump	1	Div 2 system	40 hp	---	---	---	1	(4)	(4)
Drywell purge compressor auxiliary oil pump	1	Div 2 system	1.5 hp	---	---	---	1	(4)	(4)
Hydrogen analyzer panel	2	Div 2 system	1 hp	---	---	---	2	0 sec	(4)
NONSAFEGUARDS LOADS									
RPS M-G backup voltage reg. feed	1	RPS Div 2	15 kVA	1	(4)	(4)	---	---	---
BOP battery chargers	4	(7)	100 kVA	4	20 sec	(4)	---	---	---
CRD pump	1	(7)	400 hp	1	(4)	(4)	---	---	---

TABLE 8.3-4: AUTOMATIC AND MANUAL LOADING AND UNLOADING OF ENGINEERED SAFETY FEATURES BUS (Continued)
(Sheet 4 of 9)

					Minimum Operating Requirement				
					Forced Shutdown		Loss-of-Coolant Accident		
Item Description	Number on Division	Redundant Equipment Identification	hp, KW, or kVA Each	Number Required	Time to Start (1)	Time to Stop	Number Required	Time to Start (1)	Time to Stop
Drywell cooler fan coil units	6	(7)	25 hp	6	15 sec	(4)	---	---	---
Fuel pool cooling and recirculating pump	1	(7)	150 hp	1	(4)	(4)	---	---	---
Inverter backup power transformer	3	(7)	37.5 kVA	3	(9)	(4)	---	---	---
SGTS effluent monitor distribution panel	1	(7)	11.5 hp+ 30kVA Total	---	---	---	1	(8)	(8)
Standby liquid control heater	1	(7)	10 kW	1	(4)	(4)	---	---	---
Process airborne radiation monitor	1	(7)	1.5 kW	1	(4)	(4)	---	---	---
Drywell cooling system drywell recirculation fan	1	Div 2 system	12 hp	1	(4)	(4)	---	---	---
DIVISION 2									
ENGINEERED SAFETY FEATURE LOADS									
RHR B pump	1	RHR A Div 1	1000 hp	1	10 min (4)	(4)	1	5 sec	(4)
RHR C pump	1	RHR A or B	1000 hp	---	---	---	1	0 sec	(4)
Standby service water pump	1	SSW Div 1	1250 hp	1	5 sec	(4)	1	10 sec	(4)

TABLE 8.3-4: AUTOMATIC AND MANUAL LOADING AND UNLOADING OF ENGINEERED SAFETY FEATURES BUS (Continued)
(Sheet 5 of 9)

					Minimum Operating Requirement				
					Forced Shutdown		Loss-of-Coolant Accident		
Item Description	Number on Division	Redundant Equipment Identification	hp, KW, or kVA Each	Number Required	Time to Start (1)	Time to Stop	Number Required	Time to Start (1)	Time to Stop
Standby service water pump room O/A fan	2	Div 1 system	40 hp	2	10 sec (3)	(3)	2	10 sec (3)	(3)
Diesel supply fan	1	Div 1 system	75 hp	1	5 sec (3)	(3)	1	10 sec (3)	(3)
Control room emergency fan	1	CRF Div 1	20 hp	---	---	---	1	10 sec	(4)
Standby gas treatment fan	1	SGTS Div 1	20 hp	---	---	---	1	0 sec	(4)
Lighting transformer	1	Div 1 system	15 kVA Total	1	10 sec (8)	(8)	---	---	---
Class IE battery chargers	2	Div 1 system	100 kVA	1	0 sec	(4)	1	0 sec	(4)
Control room air conditioner and fan	1	CRAC Div 1	140 hp	1	5 sec	(4)	1	10 sec	(4)
Hydrogen recombiner	1	Div 1 system	75 kW	---	---	---	1	(4)	(4)
Control room lighting	Set	Div 1 system	30 kVA Total	Set	0 sec (8)	(8)	Set	0 sec (8)	(8)
Diesel generator fuel oil transfer pump	1	D/G Div 1	2.5 hp	1	0 sec (3)	(3)	1	0 sec (3)	(3)
Safeguard swgr and battery room supply fan	2	Div 1 system	40 hp	2	0 sec (3)	(4)	2	0 sec (3)	(4)

TABLE 8.3-4: AUTOMATIC AND MANUAL LOADING AND UNLOADING OF ENGINEERED SAFETY FEATURES BUS (Continued)
(Sheet 6 of 9)

					Minimum Operating Requirement				
					Forced Shutdown		Loss-of-Coolant Accident		
Item Description	Number on Divi-sion	Redundant Equipment Identification	hp, KW, or kVA Each	Number Required	Time to Start (1)	Time to Stop	Number Required	Time to Start (1)	Time to Stop
Safeguard swgr and battery room exhaust fan	2	Div 1 system	30 hp	2	0 sec (3)	(4)	2	0 sec (3)	(4)
ECCS pump room coolers	2	Div 1 system	8 hp Total	2	0 sec (3)	(3)	2	0 sec (3)	(3)
SSW cooling tower fans	2	SSW Div 1	150 hp	2	10 sec (3)	(3)	2	15 sec (3)	(3)
Enclosure building recirculation fan	1	Div 1 system	75 hp	---	---	---	1	5 sec	(4)
Diesel generator auxiliary lube oil pump	1	D/G Div 1	60 hp	1	0 sec (3)(6)	(4)	1	0 sec (3)(6)	(4)
Diesel generator jacket water pump	1	D/G Div 1	60 hp	1	15 sec (3)(6)	(4)	1	20 sec (3)(6)	(4)
Drywell purge compressor unit	1	Div 1 system	100 hp	---	---	---	1	30 sec	(4)
Hydrogen igniters	Set	Div 1 system	6 kW Total	---	---	---	Set	(4)	(4)
Standby gas treatment heater	1	Div 1 SGTS	48 kW	---	---	---	1	0 sec (3)	(3)
Jockey pumps	2	Div 1 system	5 hp	2	0 sec (3)	(3)	2	0 sec (3)	(3)
MSIV leakage control system blower	2	Div 1 system	6.6 kW Total	2	(4)	(4)	2	(4)	(4)
ESF electrical room cooler fans	5	Div 1 system	12 hp Total	5	10 min (3)	(4)	5	0 sec (3)	(4)

TABLE 8.3-4: AUTOMATIC AND MANUAL LOADING AND UNLOADING OF ENGINEERED SAFETY FEATURES BUS (Continued)
(Sheet 7 of 9)

					Minimum Operating Requirement				
					Forced Shutdown		Loss-of-Coolant Accident		
Item Description	Number on Division	Redundant Equipment Identification	hp, KW, or kVA Each	Number Required	Time to Start (1)	Time to Stop	Number Required	Time to Start (1)	Time to Stop
Control room emergency heater	1	CRAC Div 1	21 kW	---	---	---	1	0 sec	(4)
Power panel transformer	7	Div 1 system	30 kVA	7	0 sec (8)	(8)	6	0 sec (8)	(8)
Standby liquid control pump	1	Div 1 system	40 hp	---	---	---	1	(4)	(4)
Safeguard swgr and battery room heater	2	Div 1 system	125 kW	2	10 sec (3)	(3)	2	15 sec (3)	(3)
Drywell purge compressor auxiliary oil pump	1	Div 1 system	1.5 hp	---	---	---	1	(4)	(4)
Hydrogen analyzer panel	2	Div 1 system	1 hp	---	---	---	2	0 sec	(4)
NONSAFEGUARDS LOADS									
RPS M-G backup voltage reg. feed	1	---	15 kVA	1	(4)	(4)	---	---	---
BOP battery chargers	4	(7)	100 kVA	4	20 sec	(4)	---	---	---
CRD pump	1	(7)	400 hp	1	(4)	(4)	---	---	---
Drywell cooler fan coil units	6	(7)	25 hp	6	10 sec	(4)	---	---	---
500 kV switchyard feeder	1	(7)	1000 kVA	1	(4)	(4)	---	---	---

TABLE 8.3-4: AUTOMATIC AND MANUAL LOADING AND UNLOADING OF ENGINEERED SAFETY FEATURES BUS (Continued)
(Sheet 8 of 9)

					Minimum Operating Requirement				
					Forced Shutdown		Loss-of-Coolant Accident		
Item Description	Number on Division	Redundant Equipment Identification	hp, KW, or kVA Each	Number Required	Time to Start (1)	Time to Stop	Number Required	Time to Start (1)	Time to Stop
Plant air compressor A	1	(7)	300 hp	1	(3)	(3)	---	---	---
Component cooling water pump	1	(7), (10)	100 hp	1	20 sec	(4)	---	---	---
Inverter backup power transformer	3	(7)	37.5 kVA	3	(9)	(4)	---	---	---
Fuel pool cooling and recirculating pump	1	(7)	150 hp	1	(4)	(4)	---	---	---
Post-accident sample system distribution panel	1	None Required	14 hp + 53 kVA Total	---	---	---	1	(4)	(4)
Drywell chillers transformer	1	(7)	1000 kVA	1	(4)	(4)	---	---	---
Plant air compressor A control power	1	(7)	5.2 kVA	1	(4)	(4)	---	---	---
Drywell cooling system drywell recirculation fan	1	Div 1 system	11.5 hp	1	(4)	(4)	---	---	---
DIVISION 3									
HPCS pump motor	1	Div 1 and 2 systems	3500 hp	---	---	---	1	0 sec	(4)
Diesel engine cooling water pump	1	Div 1 and 2 systems	100 hp	1	10 sec	(3)	1	10 sec	(3)

TABLE 8.3-4: AUTOMATIC AND MANUAL LOADING AND UNLOADING OF ENGINEERED SAFETY FEATURES BUS (Continued)
(Sheet 9 of 9)

					Minimum Operating Requirement				
					Forced Shutdown		Loss-of-Coolant Accident		
Item Description	Number on Division	Redundant Equipment Identification	hp, KW, or kVA Each	Number Required	Time to Start (1)	Time to Stop	Number Required	Time to Start (1)	Time to Stop
Motor-operated valves	Set	Div 1 and 2 systems	51.6 hp (Set)	---	---	---	1	0 sec	(2)
Diesel auxiliaries	Set	Div 1 and 2 systems	30 kVA (Set)	1	0 sec	(3)	1	0 sec (3)	(3)
Class IE battery charger	1	Div 1 and 2 systems	29 kW	1	0 sec (4)	(4)	1	0 sec	(4)
HPCS pump room cooler	1	Div 1 and 2 systems	5 hp	---	---	---	1	0 sec (3)	(3)
Diesel supply fan	1	Div 1 and 2 systems	40 hp	1	0 sec (3)	(3)	1	0 sec (3)	(3)

(1) Time in sequence for starting loads after voltage established on bus following emergency core cooling signal. Maximum time after LOCA for signal to start diesel generator and voltage to be established on bus is 13 seconds.

(2) Motors stop automatically when valve action is completed.

(3) Start and/or stop automatically with associated pump, diesel, or pressure or temperature switch, etc.

(4) Started and/or stopped manually by operator.

(5) If HPCS not available, all three RHR pumps required at time shown for each.

(6) Required only in event of failure of engine driven pump. Does not start if D/G performs correctly.

(7) Nonsafeguards loads; redundant equipment provided as required for operational convenience.

(8) Equipment operates as required based upon availability of power.

(9) Operates only on failure of primary power supply or component.

(10) This valve is conservatively based on 100 hp motor, actual loading is less than 100 hp.

TABLE 8.3-5: DELETED

TABLE 8.3-6: 125 V DC BATTERY A (DIV 1)

Amperage Requirements and Minimum Battery Terminal Voltages Per Time Interval After AC Power Loss

0 to 20 sec	20 sec to 1 min	1 to 239 min	239 to 240 min
494 amps	368 amps	181 amps	196 amps
114 volts	115 volts	117 volts	117 volts

DESCRIPTION OF LOADS

The amperage requirements for each time interval bounds the amperage required by the emergency loads that are required to operate during the given interval following the loss of AC power and the failure of both associated battery chargers. The minimum battery terminal voltages are based on battery response derived from discharge characteristics and the values bound the DC system component requirements.

The major loads on the battery are the following:

Standby Core Cooling Equipment

a. Primary Relief Valves

b. RCIC Control system

c. RCIC Isolation Valves

d. RCIC Turbine Trip

e. RHR Control

f. LPCS Control

TABLE 8.3-6: 125 V DC BATTERY A (DIV 1) (Continued)

Diesel Generator Field Flashing
Emergency Lighting
Indicator Lamps & Annunciators
ESF Support System Control
Reactor Protection System
Load Sequencing Control
Seismic Instrumentation
Switchgear
Uninterruptable Power Supplies

TABLE 8.3-7: 125 V DC BATTERY B (DIV 2)

Amperage Requirements and Minimum Battery Terminal Voltages
Per Time Interval After AC Power Loss

0 to 30 sec	30 sec to 1 min	1 to 240 min
327 amps	221 amps	170 amps
116 volts	117 volts	117 volts

DESCRIPTION OF LOADS

The amperage requirements for each time interval bounds the amperage required by the emergency loads that are required to operate during the given interval following the loss of AC power and the failure of both associated battery chargers. The minimum battery terminal voltages are based on battery response derived from discharge characteristics and the values bound the DC system component requirements.

The major loads on the battery are the following:

Standby core cooling equipment

a. Primary Relief Valves

b. RHR Control

c. RCIC Control

Diesel Generator Field Flashing
Emergency Lightning
Indicator Lamps & Annunciators
ESF Support System Control
Reactor Protection System
Load Sequencing Control
Switchgear
Uninterruptable Power Supplies

TABLE 8.3-8: 125 V DC BUS (HPCS) (DIV 3)

Amperage Requirements and Minimum Battery Terminal Voltages

Per Time Interval After AC Power Loss

0-1 Min	1-60 Min	60-120 Min
61.81 A	17.45 A	17.45 A
111.6 volts	113.4 volts	113.4 volts

DESCRIPTION OF LOADS

The peak amperage value for each time interval is the summation of all emergency loads that are required to operate during the given interval following the Loss of AC Power. These loads are Diesel Engine Control, Generator Auxiliary Control, Field Flashing, Solenoid Valves, Switchgear Breakers, Relays, HPCS Logic Panel, and Auxiliaries

Battery capacity - 100 Ah at 8 hr
- 150 A at 1 min

Table 8.3-9

Load Shedding and Sequencing System

LSS Table 1, Div 1

DESCRIPTION	VOLTAGE	LOAD (KW)	REFERENCE DWG. NO.	CONTACTS			CONTACT ACTUATION (NOTES 3 & 4)						LOAD ACTUATION (SEE NOTE 4)			REMARKS
							SHEDDING			SEQUENCING						
				NAME	TYPE	RELAY	BUV	LOP	LOCA	BUV	LOP	LOCA	BUV	LOP	LOCA	
LPCS Pump Q1E21C001-A	4160	1602	E-1182-026 E-1182-026 E-1182-026	SEQ (1) SEQ (1) ESF SHED	M-NC P-NO P-NO	XK17, R1-M1 XK18, T1-M1 XK11, T2-M2	X - X	X - X	X - X	0 0 -	0 0 -	0 0 -	- - -	- - -	0 0 -	
RHR Pump A Q1E12C002A-A	4160	803	E-1181-067 E-1181-043 E-1181-043	SEQ (1) ESF SHED SEQ (2)	M-NC P-NO M-NC	XK17, R2-M2 XK11, T3-M3 XK19, R2-M2	X X X	X X X	X X X	0 - 0	0 - 0	0 - 5	0 - 0	0 - 0	5 - 5	A 5 SEC T.D. BY GE
DG AUX LUBE OIL PMP A Q1P75C007A-A	480	49	E-1110-010 E-1110-010	SEQ (1) ESF SHED	M-NC P-NO	XK17, R4-M4 XK9, T3-M3	X X	X X	X X	0 -	0 -	0 -	0 -	0 -	0 -	
ENCLOSURE BLDG RECIRC FAN A Q1T48C001A-A	480	60	E-1257-007 E-1257-007	SEQ (2) ESF SHED	M-NC P-NO	XK19, R1-M1 XK9, T4-M4	X X	X X	X X	0 -	0 -	5 -	0 -	0 -	5 -	
SSW PUMP A Q1P41C001A-A	4160	997	E-1225-003 E-1225-003	SEQ (3) ESF SHED	M-NC P-NO	XK21, R1-M1 XK10, T1-M1	X X	X X	X X	5 -	5 -	10 -	5 -	5 -	10 -	
CONTROL ROD DRIVE PUMP A N1C11C001A-A	4160	325	E-1166-001	ESF SHED	P-NO	XK12, T2-M2	X	X	X	-	-	-	-	-	-	MANUALLY STARTED
SWGR RM AIR HDLG UNIT A Q1Z77B001A-A	480	125	E-1267-019	SEQ (4)	M-NC	XK25, R1-M1	X	X	X	10	10	15	10	10	15	
SWGR RM AIR HDLG UNIT A Q2Z77B001A-A	480	125	E-1267-005	SEQ (4)	M-NC	XK26, R1-M1	X	X	X	10	10	15	10	10	15	
SSW COOLING TOWER FAN A Q1P41C003A-A	480	122	E-1225-004 E-1225-004	SEQ (4) ESF SHED	M-NC P-NO	XK25, R2-M2 XK10, T3-M3	X X	X X	X X	10 -	10 -	15 -	10 -	10 -	15 -	
CONTROL RM AIR HDLG UNIT A QSZ51B002A-A	480	153	E-0131-011 E-0131-011	SEQ (3) ESF SHED	P-NO P-NO	XK24, T2-M2 XK12, T3-M3	- X	- X	- X	5 -	5 -	10 -	5 -	5 -	10 -	
SSW COOLING TOWER FAN B Q1P41C003B-A	480	122	E-1225-004 E-1225-004	SEQ (4) ESF SHED	M-NC P-NO	XK25, R3-M3 XK11, T1-M1	X X	X X	X X	10 -	10 -	15 -	10 -	10 -	15 -	

Sheet 1 of 7

Table 8.3-9 (continued)

Load Shedding and Sequencing System

LSS Table 1, Div 1

DESCRIPTION	VOLTAGE	LOAD (KW)	REFERENCE DWG. NO.	CONTACTS			CONTACT ACTUATION (NOTES 3 & 4)						LOAD ACTUATION (SEE NOTE 4)			REMARKS
							SHEDDING			SEQUENCING						
				NAME	TYPE	RELAY	BUV	LOP	LOCA	BUV	LOP	LOCA	BUV	LOP	LOCA	
HYDROGEN RECOMBINER A Q1E61C003A-A	480	75	E-1186-016	SEQ (5)	M-NC	XK28, R1-M1	X	X	X	15	15	20	-	-	-	MANUALLY STARTED
DRYWELL PURGE COMPRESSOR A Q1E61C001A-A	480	83	E-1186-011 E-1186-011 E-1186-011	SEQ (5) ESF SHED SEQ (6)	M-NC P-NO M-NC	XK28, R2-M2 XK12, T4-M4 XK31, R4-M4	X X X	X X X	X X X	15 - 10	15 - 20	20 - -	- - -	- - -	30 - -	
DG ROOM OUTSIDE AIR FAN A Q1X77C001A-A	480	62	E-1265-012 E-1265-012	SEQ (3) ESF SHED	P-NO P-NO	XK24, T1-M1 XK13, T3-M3	- X	- X	- X	5 -	5 -	10 -	5 -	5 -	10 -	
DG AUX JACKET WATER PMP A Q1P75C004A-A	480	49	E-1110-011 E-1110-011	SEQ (5) ESF SHED	M-NC P-NO	XK28, R4-M4 XK11, T4-M4	X X	X X	X X	15 -	15 -	20 -	15 -	15 -	20 -	
BAT CHARGER 1D4 FDR 52-15102 N1L51S001A-D	480	55	E-1118-002 E-1118-002	SEQ (6) ESF SHED	P-NO P-NO	XK32, T2-M2 XK13, T1-M1	- X	- X	- X	10 -	20 -	- -	10 -	20 -	- -	
BAT CHARGER 1D5 FDR 52-15202 N1L51S001B-D	480	55	E-1118-002 E-1118-002	SEQ (6) ESF SHED	P-NO P-NO	XK32, T3-M3 XK10, T4-M4	- X	- X	- X	10 -	20 -	- -	10 -	20 -	- -	
FUEL POOL COOLING PMP A Q1G41C001A-A	480	124	E-1207-014	ESF SHED	P-NO	XK13, T2-M2	X	X	X	-	-	-	-	-	-	MANUALLY STARTED
1M71 CNTMT AND DRWL ISOL SYS A ANN	125	-	E-1219-003	BUV	M-NC	XK2, R3-M3	X	-	-	-	-	-	-	-	-	
1R21 INC BRKR 152-1514 (ESF BUS 15AA)	4160	-	E-1109-001	TRIP INC BRKR	P-NO	XK1, T1-M1	X	-	-	-	-	-	-	-	-	
1R21 INC BRKR 152-1501 (ESF BUS 15AA)	4160	-	E-1109-002	TRIP INC BRKR	P-NO	XK1, T2-M2	X	-	-	-	-	-	-	-	-	
1R21 INC BRKR 152-1511 (ESF BUS 15AA)	4160	-	E-1109-003	TRIP INC BRKR	P-NO	XK1, T3-M3	X	-	-	-	-	-	-	-	-	

Sheet 2 of 7

Table 8.3-9 (continued)
Load Shedding and Sequencing System
LSS Table 1, Div 1

DESCRIPTION	VOLTAGE	LOAD (KW)	REFERENCE DWG. NO.	CONTACTS			CONTACT ACTUATION (NOTES 3 & 4)						LOAD ACTUATION (SEE NOTE 4)			REMARKS
							SHEDDING			SEQUENCING						
				NAME	TYPE	RELAY	BUV	LOP	LOCA	BUV	LOP	LOCA	BUV	LOP	LOCA	
1R21 DG BRKR 152-1508	4160	-	E-1109-020 E-1109-020 E-1109-020	CLOSE DG BRKR ESF SHED LOCA	M-NO P-NO M-NC	XK16, T1-M1+ XK10, T2-M2 XK4, R1-M1	- X -	- X -	- X X	- - -	- - -	- - -	- - -	- - -	- - -	+CL PREMISSIVE ON BUV AND LOP
1R20 INC FOR BRKR 52-15405 (MCC 15B42)	480	-	E-1115-012 E-1115-012 E-1115-012 E-1115-012	SEQ (5) LOCA ESF SHED SEQ (5)	P-NO M-NC P-NO M-NC	XK30, T1-M1 XK5, R1-M1 XK9, T1-M1 XK28, R3-M3+	- - X X	- - X X	- X X X	15 - - 15	15 - - 15	20 - - 20	15 - - 15	15 - - 15	- - - 20	+CLOSE PERMISSIVE ON LOCA
1E61 CNTMT & DRWL PURGE CONT	125	-	E-1186-008	LOCA	M-NC	XK5, R3-M3	-	-	X	-	-	-	-	-	-	
1P41 SSW CONTROL CKT A	125	-	E-1225-001 E-1225-001	LOP LOCA	M-NC M-NC	XK15, R1-M1 XK5, R4-M4	- -	X -	- X	- -	- -	- -	- -	- -	- -	
1P75 EMERGENCY DIESEL GENERATOR	4160	-	E-1110-012 E-1110-013 E-1110-018 E-1110-012 E-1110-013 E-1110-019	LOCA LOCA LOCA BUV BUV SEQ (5)	M-NO M-NO M-NC M-NO M-NO M-NO	XK4, T2-M2 XK4, T3-M3 XK4, R4-M4 XK2, T1-M1 XK2, T2-M2 XK29, T1-M1	- - - X X X	- - - X X X	X X X - - X	- - - - - 15	- - - - - 15	- - - - - 20	- - - - - 15	- - - - - 15	- - - - - 20	
RWCU HEAT EXCH ISOL VLV N1P42F103	120	-	E-1226-005	LOP* (BOP)	M-NC	XK58, R2-M2	-	X	-	-	-	-	-	-	-	
INPUT TO TRANSIENT TEST SYSTEM	-	-	E-1197-020	LOP	M-NC	XK15, R4-M4	-	X	-	-	-	-	-	-	-	
BAT CHARGER 1DK4 FDR 52-15104 N1L51S004A-D	480	55	E-1118-002 E-1118-002	SEQ (6) ESF SHED	P-NO P-NO	XK32, T1-M1 XK14, T2-M2	- X	- X	- X	10 -	20 -	- -	10 -	20 -	- -	
BAT CHARGER 1DK5 FDR 52-15204 N1L51S004B-D	480	55	E-1118-002 E-1118-002	SEQ (6) ESF SHED	P-NO P-NO	XK32, T4-M4 XK14, T3-M3	- X	- X	- X	10 -	20 -	- -	10 -	20 -	- -	

Sheet 3 of 7

Table 8.3-9 (continued)
Load Shedding and Sequencing System
LSS Table 2, Div 2

DESCRIPTION	VOLTAGE	LOAD (KW)	REFERENCE DWG. NO.	CONTACTS			CONTACT ACTUATION (NOTES 3 & 4)						LOAD ACTUATION (SEE NOTE 4)			REMARKS
							SHEDDING			SEQUENCING						
				NAME	TYPE	RELAY	BUV	LOP	LOCA	BUV	LOP	LOCA	BUV	LOP	LOCA	
RHR PUMP C Q1E12C002C-B	4160	803	E-1181-045 E-1181-045	SEQ (1) ESF SHED	P-NO P-NO	XK18, T1-M1 XK11, T2-M2	- X	- X	- X	0 -	0 -	0 -	0 -	0 -	0 -	
DG AUX LUBE OIL PUMP B Q1P75C007B-B	480	49	E-1111-010 E-1111-010	SEQ (1) ESF SHED	M-NC P-NO	XK17, R4-M4 XK9, T3-M3	X X	X X	X X	0 -	0 -	0 -	0 -	0 -	0 -	
RHR PUMP B Q1E12C002B-B	4160	803	E-1181-068 E-1181-044 E-1181-044	SEQ (1) ESF SHED SEQ (2)	M-NC P-NO M-NC	XK17, R2-M2 XK11, T3-M3 XK19, R2-M2	X X X	X X X	X X X	0 - 0	0 - 0	0 - 5	0 - 0	0 - 0	5 - 5	A 5 SEC T.D. BY G.E.
ENCLOSURE BLDG RECIRC FAN B Q1T48C001B-B	480	60	E-1257-007 E-1257-007	SEQ (2) ESF SHED	M-NC P-NO	XK19, R1-M1 XK9, T4-M4	X X	X X	X X	0 -	0 -	5 -	0 -	0 -	5 -	
SSW PUMP B Q1P41C001B-B	4160	997	E-1225-064 E-1225-064	SEQ (3) ESF SHED	M-NC P-NO	XK21, R1-M1 XK10, T1-M1	X X	X X	X X	5 -	5 -	10 -	5 -	5 -	10 -	
CONTROL ROD DRIVE PUMP B N1C11C001B-B	4160	*325*	E-1166-002	ESF SHED	P-NO	XK12, T2-M2	X	X	X	-	-	-	-	-	-	MANUALLY STARTED
PLANT AIR CPRSR N1P51C001-B	4160	230	E-7177-016 E-7177-016	SEQ (6) ESF SHED	M-NO P-NO	XK31, T3-M3 XK12, T1-M1	X X	X X	X X	10 -	20 -	- -	10 -	20 -	- -	LOCKED OUT ON LOCA
SAFEGUARD SWGR. & BATT. RM. HTR. UNIT B — Q1Z77B001B-B	480	125	E-1267-005	SEQ (4)	M-NC	XK25, R1-M1	X	X	X	10	10	15	10	10	15	
SAFEGUARD SWGR. & BATT. RM. HTR. UNIT B — Q2Z77B001B-B	480	125	E-1267-005	SEQ (4)	M-NC	XK26, R1-M1	X	X	X	10	10	15	10	10	15	
SSW COOLING TOWER FAN C Q1P41C003C-B	480	122	E-1225-063 E-1225-063	SEQ (4) ESF SHED	M-NC P-NO	XK25, R2-M2 XK10, T3-M3	X X	X X	X X	10 -	10 -	15 -	10 -	10 -	15 -	
CONTROL RM AIR HDLG UNIT B QSZ51B002B-B	480	153	E-0131-011 E-0131-011	SEQ (3) ESF SHED	P-NO P-NO	XK24, T2-M2 XK12, T3-M3	- X	- X	- X	5 -	5 -	10 -	5 -	5 -	10 -	
1R27 SWITCHYARD FEEDER BRKR 152-1610	4160	*225*	E-1109-027	ESF SHED	P-NO	XK9, T1-M1	X	X	X	-	-	-	-	-	-	MANUALLY CLOSED
SSW COOLING TOWER FAN D Q1P41C003D-B	480	122	E-1225-063 E-1225-063	SEQ (4) ESF SHED	M-NC P-NO	XK25, R3-M3 XK11, T1-M1	X X	X X	X X	10 -	10 -	15 -	10 -	10 -	15 -	

Sheet 4 of 7

Table 8.3-9 (continued)
Load Shedding and Sequencing System
LSS Table 2, Div 2

DESCRIPTION	VOLTAGE	LOAD (KW)	REFERENCE DWG. NO.	CONTACTS			CONTACT ACTUATION (NOTES 3 & 4)						LOAD ACTUATION (SEE NOTE 4)			REMARKS
							SHEDDING			SEQUENCING						
				NAME	TYPE	RELAY	BUV	LOP	LOCA	BUV	LOP	LOCA	BUV	LOP	LOCA	
HYDROGEN RECOMBINER B Q1E61C003B-B	480	75	E-1186-016	SEQ (5)	M-NC	XK28, R1-M1	X	X	X	15	15	20	-	-	-	MANUALLY STARTED
DRYWELL PURGE COMPRESSOR B Q1E61C001B-B	480	83	E-1186-011 E-1186-011 E-1186-011	SEQ (5) ESF SHED SEQ (6)	M-NC P-NO M-NC	XK28, R2-M2 XK12, T4-M4 XK31, R4-M4	X X X	X X X	X X X	15 - 10	15 - 20	20 - -	- - -	- - -	30 - -	
DG RM OUTSIDE AIR FAN B Q1X77C001B-B	480	62	E-1265-002 E-1265-002	SEQ (3) ESF SHED	P-NO P-NO	XK24, T1-M1 XK13, T3-M3	- X	- X	- X	5 -	5 -	10 -	5 -	5 -	10 -	
DG AUX JACKET WATER PMP B Q1P75C004B-B	480	49	E-1111-011 E-1111-011	SEQ (5) ESF SHED	M-NC P-NO	XK28, R4-M4 XK11, T4-M4	X X	X X	X X	15 -	15 -	20 -	15 -	15 -	20 -	
BAT CHARGER 1E4 FDR 52-16102 N1L51S002A-E	480	55	E-1118-002 E-1118-002	SEQ (6) ESF SHED	P-NO P-NO	XK32, T2-M2 XK13, T1-M1	- X	- X	- X	10 -	20 -	- -	10 -	20 -	- -	
BAT CHARGER 1E5 FDR 52-16202 N1L51S002B-E	480	55	E-1118-002 E-1118-002	SEQ (6) ESF SHED	P-NO P-NO	XK32, T3-M3 XK10, T4-M4	- X	- X	- X	10 -	20 -	- -	10 -	20 -	- -	
COMPONENT COOLING WATER PUMP B N1P42C001B-B	480	81	E-1226-003 E-1226-003	SEQ (6) ESF SHED	M-NC P-NO	XK31, R2-M2 XK14, T1-M1	X X	X X	X X	10 -	20 -	- -	10 -	20 -	- -	MANUALLY STARTED
1P41 SSW CONTROL CKT B	125	-	E-1225-002 E-1225-002	LOP LOCA	M-NC M-NC	XK15, R1-M1 XK5, R2-M2	- -	X -	- X	- -	- -	- -	- -	- -	- -	
FUEL POOL COOLING PMP B Q1G41C001B-B	480	124	E-1207-014	ESF SHED	P-NO	XK13, T2-M2	X	X	X	-	-	-	-	-	-	
1E61 CTMT & DRWL PURGE CONT	125	-	E-1186-009	LOCA	M-NC	XK5, R3-M3	-	-	X	-	-	-	-	-	-	
1M71 CTMT & DRWL ISOL SIS B ANN	125	-	E-1219-004	BUV	M-NC	XK2, R3-M3	X	-	-	-	-	-	-	-	-	
1R21 INC BRKR 152-1601 ESF BUS 16AB	4160	-	E-1109-005	TRIP INC BRKR	P-NO	XK1, T1-M1	X	-	-	-	-	-	-	-	-	

Sheet 5 of 7

Table 8.3-9 (continued)
Load Shedding and Sequencing System
LSS Table 2, Div 2

DESCRIPTION	VOLTAGE	LOAD (KW)	REFERENCE DWG. NO.	CONTACTS			CONTACT ACTUATION (NOTES 3 & 4)						LOAD ACTUATION (SEE NOTE 4)			REMARKS
							SHEDDING			SEQUENCING						
				NAME	TYPE	RELAY	BUV	LOP	LOCA	BUV	LOP	LOCA	BUV	LOP	LOCA	
1R21 INC BRKR 152-1614 ESF BUS 16AB	4160	-	E-1109-006	TRIP INC BRKR	P-NO	XK1, T2-M2	X	-	-	-	-	-	-	-	-	
BAT CHARGER 1L4 FDR 52-16106 NIL51S0005A-E	480	55	E-1118-002 E-1118-002	SEQ (6) ESF SHED	P-NO P-NO	XK32, T1-M1 XK14, T2-M2	- X	- X	- X	10 -	20 -	- -	10 -	20 -	- -	
BAT CHARGER 1L5 FDR 52-16205 NIL51S0005B-E	480	55	E-1118-002 E-1118-002	SEQ (6) ESF SHED	P-NO P-NO	XK32, T4-M4 XK14, T3-M3	- X	- X	- X	10 -	20 -	- -	10 -	20 -	- -	
1R21 INC BRKR 152-1611 (ESF BUS 16AB)	4160	-	E-1109-007	TRIP INC BRKR	P-NO	XK1, T3-M3	X	-	-	-	-	-	-	-	-	
1R20 FDR BRKR 152-1603 (XFRM FOR DRYWELL CHILLERS)	4160	660	E-1215-001 E-1215-001	SEQ (6) ESF SHED	M-NC P-NO	XK31, R1-M1 XK14, T4-M4	X X	X X	- X	10 -	20 -	- -	10 -	20 -	- -	LOCKED OUT ON LOCA
1R21 INC FDR BRKR 52-16405 (MCC 16B42)	480	-	E-1116-012 E-1116-012 E-1116-012 E-1116-012	SEQ (5) LOCA ESF SHED SEQ (5)	P-NO M-NC P-NO M-NC	XK30, T1-M1 XK5, R1-M1 XK9, T2-M2 XK28, R3-M3+	- - X X	- - X X	- X X X	15 - - 15	15 - - 15	20 - - 20	15 - - 15	15 - - 15	- - - 20	+CLOSE PERMISSIVE ON LOCA
1R21 DG BRKR 152-1608	4160	-	E-1109-024 E-1109-024 E-1109-024	CLOSE DG BRKR ESF SHED LOCA	M-NO P-NO M-NC	XK16, T1-M1+ XK10, T2-M2 XK4, R1-M1	- X -	- X -	- X X	- - -	- - -	- - -	- - -	- - -	- - -	+CLOSE PERMISSIVE ON BUV AND LOP
1P75 EMERGENCY DIESEL GENERATOR	4160	-	E-1111-012 E-1111-013 E-1111-018 E-1111-013 E-1111-012 E-1111-019	LOCA LOCA LOCA BUV BUV SEQ (5)	M-NO M-NO M-NC M-NO M-NO M-NO	XK4, T2-M2 XK4, T3-M3 XK4, R4-M4 XK2, T2-M2 XK2, T1-M1 XK29, T1-M1	- - - X X X	- - - - - X	X X X - - X	- - - - - 15	- - - - - 15	- - - - - 20	- - - - - 15	- - - - - 15	- - - - - 20	
HEAT EXCHANGE ISOL VLV N1P44F115	120	-	E-1228-003	LOP*	M-NC	XK58, R2-M2	-	X	-	-	-	-	-	-	-	
INPUT TO TRANSIENT TEST SYS	-	-	E-1197-016	LOP	M-NC	XK15, R4-M4	-	X	-	-	-	-	-	-	-	
HEAT EXCHANGE ISOL VLV N1P44F011	120	-	E-1228-003	LOP*	M-NC	XK58, R1-M1	-	X	-	-	-	-	-	-	-	
SERVICE AIR COMP OUTLET VLV N1P43F289	120	-	E-1227-009	LOP*	M-NC	XK58, R3-M3	-	X	-	-	-	-	-	-	-	

Sheet 6 of 7

Table 8.3-9 (continued)
Load Shedding and Sequencing
System

Notes:
1. The contact names are derived from the output relay description shown on the logic (E-1039).
2. The contact types:
    M - Maintained
    NC - Normally Closed
    NO - Normally Open
    P - Pulsed
3. Contact actuation during shedding indicated by an "X" in the appropriate columns is the switching of a contact from its normal state to the opposite state.
4. The numbers under "CONTACT ACTUATION - SEQUENCING" column indicate contact actuation time in seconds. Contact actuation during sequencing is the switching of a contact back to its normal state to provide a permissive for sequencing. For actual load actuation time, see the "LOAD ACTUATION" column.
5. *Indicates contact is isolated for BOP or associated use.

Reference drawings:
E-1120-001 Revision 12
E-1120-002 Revision 11
E-1120-003 Revision 15
E-1120-004 Revision 15
Bechtel E-1039 Logic diagram for LSS panels

Sheet 7 of 7

TABLE 8.3-10: NON-CLASS 1E LOADS FED FROM DIVISION 1 BUSES

Item	Quantity	Total Load	Voltage	Bus	Fed From Function	Remarks
Control rod drive pump	1	325kW	4.16kV	15AA	To cool the control rod drives	Shed upon receipt of accident signal. Can be reconnected manually, if required.
BOP battery chargers	4	220kW	480V	15BA1 15BA2	To allow recharging of BOP batteries following sustained loss of offsite power.	
Standby liquid control system operating heater	1	10kW	480V	15B42	To maintain the SLC boron in solution	
Drywell cooler fan coil units	6	150kW	480V	15B42	To allow maintenance of the drywell environment at habitable levels under conditions of loss of offsite power.	
Drywell cooler inlet MOVs	6	1.5kW	480V	15B42	Same as drywell cooler fan coil units.	
Lighting transformer	1	15kW	480V	15B42	To provide lighting to diesel generator rooms under conditions of loss of offsite power.	

TABLE 8.3-10: NON-CLASS 1E LOADS FED FROM DIVISION 1 BUSES (Continued)

Item	Quantity	Total Load	Voltage	Bus	Fed From Function	Remarks
Power panel transformer	1	30kW	480V	15B42	To provide 120V ac power to nonessential loads required to operate following loss of offsite power.	
Process airborne radiation monitor	1	1.5kW	480V	15B42	To allow operation following an SSE (per Reg. Guide 1.45)	
RPS M-G backup voltage reg. feed	1	15kW	480V 10	15B42	To energize the RPS bus	
Inverter backup power transformers	3	90kW	480V 10	15B42	To provide alternate power supply to inverters following loss of offsite power	Shed upon receipt of accident signal. Can be reconnected manually, if required.
SGTS effluent monitor distribution panel	1	15kW	480V 30	15B41	To provide power for SGTS effluent monitoring	Panel is fed through two series Class 1E breakers to provide isolation from 1E power distribution system. Load remains connected before, during, and following an accident.
Drywell cooling system drywell recirc. fan	1	10kW	480V	15B42	To provide recirculation of air in the drywell	Shed upon receipt of accident signal. Can be reconnected manually, if required.

TABLE 8.3-10: NON-CLASS 1E LOADS FED FROM DIVISION 1 BUSES (Continued)

Item	Quantity	Total Load	Voltage	Bus	Fed From Function	Remarks
Remote shutdown panel room heat pump	1	2.8kW	208V	15B61	To provide cooling for remote shutdown panel rooms	Heat pump is fed through one class IE circuit breaker and one fuse to provide isolation from IE power distribution system. Load remains connected before, during, and following an accident.
Battery charger for FLEX UCP Valve power	1	1kW	120V 1 phase	15P41	To provide 120V ac power to battery charger for the FLEX UCP valve battery.	The charger is powered during all events except loss of AC power. Power to the charger is through one class 1E fuse to provide isolation from the 1E power distribution system.
Inverter backup	1	30kW	480V 3 phase	15B42	To provide alternate power supply to inverters on loss of offsite power and isolate the Class IE and non Class IE power systems	Shed upon receipt of accident signal. Can be reconnected manually if required.

TABLE 8.3-11: NON-CLASS 1E LOADS FED FROM DIVISION 2 BUSES

Item	Quantity	Total Load	Voltage	Fed From Bus	Function	Remarks
Control rod drive pump	1	325kW	4.16kV	16AB	To cool the control rod drives	Shed upon receipt of accident signal. Can be reconnected manually, if required.
500 kV switchyard feeder	1	225kW	4.16kV	16AB	To supply switchyard power requirements following a loss of offsite power	
Plant air compressor A	1	230kW	4.16kV	16AB	To allow operation of selected nonessential air-operated equipment following loss of offsite power	
Component cooling water pump	1	100kw(1)	480V	16BB3	To supply cooling water for selected nonessential components following loss of offsite power	
BOP battery chargers	4	220kW	480V	16BB1 16BB2	To allow recharging of BOP batteries following a sustained loss of offsite power	

TABLE 8.3-11: NON-CLASS 1E LOADS FED FROM DIVISION 2 BUSES (CONTINUED)

Item	Quantity	Total Load	Voltage	Fed From Bus	Function	Remarks
Drywell cooler fan coil units	6	150kW	480V	16B42	To allow maintenance of the drywell environment at habitable levels under conditions of loss of offsite power	Shed upon receipt of accident signal. Can be reconnected manually, if required.
Drywell cooler inlet MOVs	6	1.5kW	480V	16B42	Same as drywell cooler fan coil units	
Drywell chillers transformer	1	660kW	4.16kV	16AB	Provide power to drywell chillers and chilled water pump	
Inverter backup power transformers	3	90kW	480V 10	16B42	To provide alternate 10 power supply to inverters following loss of offsite power	
Plant air compressor A control panel	1	4.3kW	480V 10	16B42	To allow operation of Plant air compressor following loss of offsite power	
Power panel transformer	1	30kW	480V	16B42	To provide 120V ac power to nonessential loads required to operate following loss of off-site power	

TABLE 8.3-11: NON-CLASS 1E LOADS FED FROM DIVISION 2 BUSES (CONTINUED)

Item	Quantity	Total Load	Voltage	Fed From Bus	Function	Remarks
Plant service water auxiliary bldg outboard MOV	1	0.33kW	480V	16B42	To allow cooling of certain nonessential loads following loss of offsite power	Shed upon receipt of accident signal. Can be reconnected Manually if required.
RPS M-G backup voltage reg. feed	1	15kW	480V 10	16B42	To energize the RPS bus	
Lighting transformer	1	15kW	480V	16B42	To provide lighting for diesel generators rooms under conditions of loss of offsite power	
Post-accident sample system power distribution panel	1	15kW	480V	16B42	To allow operation of post-accident sample system following loss of offsite power	
CO system storage unit safety panel	1	43kW	480V	16B42	To provide CO for fire protection during loss of offsite power	
Drywell cooling system drywell recirc. fan	1	10kW	480V	16B42	To provide recirculation of air in the drywell	

TABLE 8.3-11: NON-CLASS 1E LOADS FED FROM DIVISION 2 BUSES (CONTINUED)

Item	Quantity	Total Load	Voltage	Fed From Bus	Function	Remarks
Inverter backup	1	30kW	480V 3 Phase	16B42	To provide alternate power supply to inverters on loss of offsite power and isolate the Class IE and non Class IE power systems	Shed upon receipt of accident signal. Can be reconnected manually if required.

NOTE (1) This valve is based on 100 hp motor, actual loading is less than 100 hp.

TABLE 8.3-12: NON-CLASS IE LOADS FED FROM DC SYSTEM BUSES

Item	Quantity	Total Load	Voltage	Fed From Bus	Function	Remarks
RCIC Turbine Trip and Throttle Valve	1	0.45 kw	125	11DA	To reopen the Turbine Trip and Trip and Throttle to Throttle Valve upon an electrical trip.	Valve is fed through two series Class IE breakers to provide isolation from IE powered distribution system. Load remains connected before, during, and following an accident.
RCIC Gland Seal System Compressor	1	7.5 HP	125	11DA	Gland Seal System prevents Turbine from Steam Leakage	RCIC Gland Seal Compressor is fed from Class 1E Source and is treated as Class 1E associated load which sheds on LOCA.
Backup Scram valve 1C11-F110A	1	84 W	125	11DA	In conjunction with 1C11-F110B/C provides non-safety related backup means of depressurizing the scram air header.	Valve power is fed through Valve two series Class 1E fuses to provide isolation from Class 1E powered distribution system. Loads remain connected before, during and following a accident.

TABLE 8.3-12: NON-CLASS IE LOADS FED FROM DC SYSTEM BUSES (CONTINUED)

Item	Quantity	Total Load	Voltage	Fed From Bus	Function	Remarks
Backup Scram Valves 1C11-F110B 1C11-F110C	2	168 W	125	11DB	In conjunction with 1C11-F110A provides non-safety related backup means of depressurizing the scram air header.	Valve power is fed through two series Class 1E fuses to provide isolation from Class 1E powered distribution system. Loads remain connected before, during and following a accident.

TABLE 8.3-13: SEPARATION CRITERIA ALLOWABLE VERSUS TESTED

Configuration Description	Minimum Allowable Spacing w/o Barrier	Tested Spacing
1. IEEE-383 Qualified Cables or Equivalent Flame Tested Cables for 480 VAC and under		
a. Cable to Cable or Cable to Non-Class 1E Open Tray	12″ See Note 4	6″ Hor. or 9″ Vert.
b. Cable to Enclosed Raceway	1/4″	1/4″
c. Cable or Conduit Crossing Conduit	0″	0″
d. Conduit to Conduit	1/4″ (1/8″ at fittings)	1/4″ (1/8″ at fittings)
e. Wrapped Cable to Unwrapped Cable	0″	See Note 2
2. Non-IEEE 383 Qualified Cables for 240 VAC and under		
a. Wrapped Cable to Enclosed Raceway	0″	See Note 3
b. Cable or Conduit Crossing Conduit	0″	0″
c. Wrapped Temporary Cable to Unwrapped Permanent (IEEE-383 Qualified) Cable	0″	See Note 3
d. Cable to Cable or Cable to Non-Class 1E Open Tray	12″ See Note 4	See Note 1
3. IEEE-383 Qualified Cables or Equivalent Flame Tested Cables for 250 VDC and Under		
a. Cable to Cable or Cable to Non-Class 1E Open Tray	12″ See Note 4	6″ Hor. or 9″ Vert
b. Cable to Enclosed Raceway	1/4″	1/4″
c. Cable or Conduit Crossing Conduit	0″	0″

TABLE 8.3-13: SEPARATION CRITERIA ALLOWABLE VERSUS TESTED (CONTINUED)

Configuration Description	Minimum Allowable Spacing w/o Barrier	Tested Spacing
d. Conduit to Conduit	1/4″ (1/8″ at fittings)	1/4″ (1/8″ at fittings)
e. Wrapped Cable to Unwrapped Cable	0″	See Note 2
4. Non-IEEE 383 Qualified Cables for 48 VDC and Under		
a. Wrapped Cable to Enclosed Raceway	0″	See Note 3
b. Cable or Conduit Crossing Conduit	0″	0″
c. Wrapped Temporary Cable to Unwrapped Permanent (IEEE-383 Qualified) Cable	0″	See Note 3
d. Cable to Cable or Cable to Non-Class 1E Open Tray	12″ See Note 4	See Note 1

For the purpose of this table, IEEE-383 refers to the 1974 version as endorsed by Reg. Guide 1.75 Rev. 1.

Note 1: Bounded by IEEE-383 qualified cable test data for free air cable to free air cable.

Note 2: Analysis shows that Kaowool Blanket wrap provides more effective thermal protection than Siltemp 188CH.

Note 3: Analysis bounds these configurations to the same separation criteria of IEEE-383 Qualified cable test data of wrapped cable to unwrapped cable.

Note 4: Minimum radial spacing of 12" was chosen to ensure that test spacing of 6" Hor. or 9" Vert. would not be exceeded.

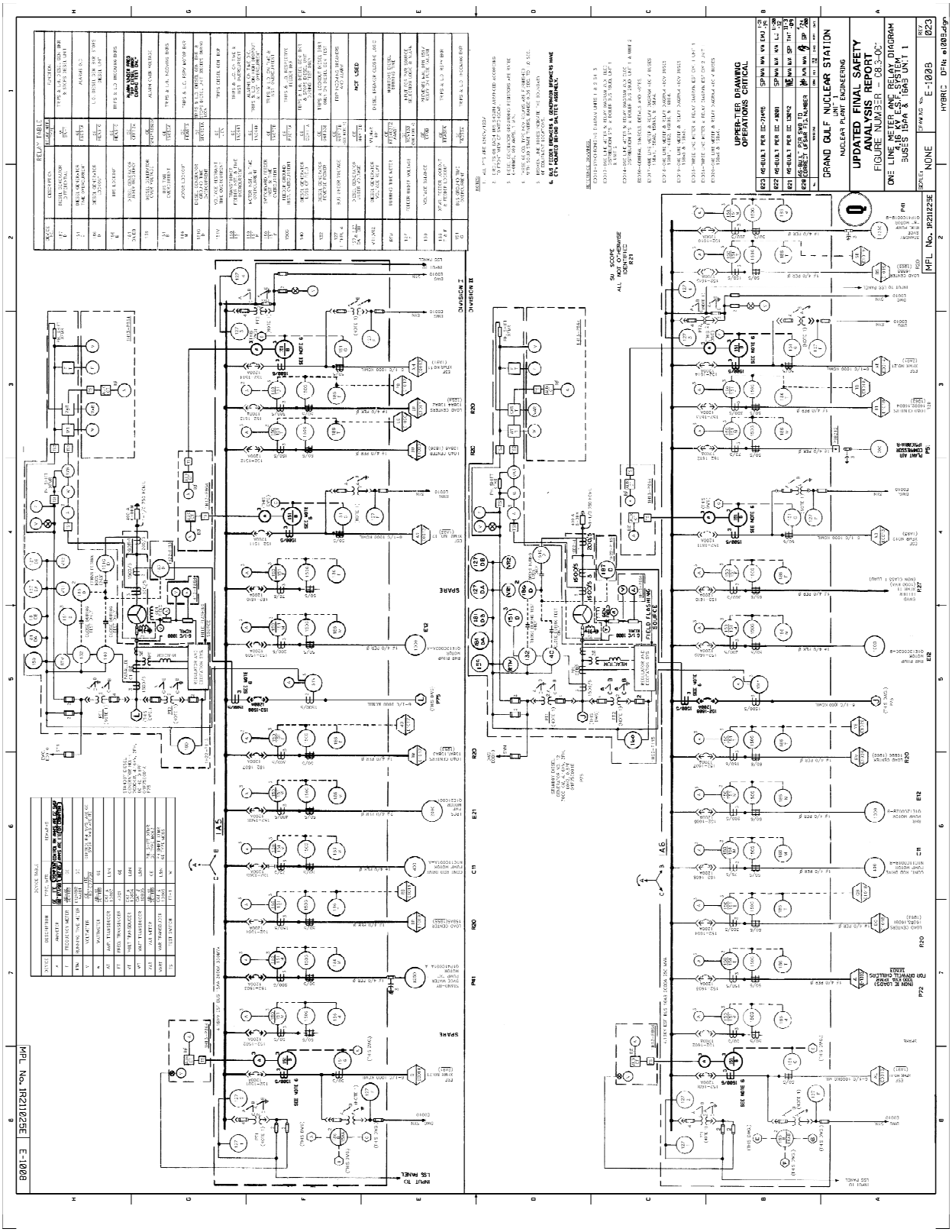
UPDATED FINAL SAFETY ANALYSIS REPORT
FIGURE NUMBER - 08.3-0C
ONE LINE METER AND RELAY DIAGRAM
4.16 KV E.S.F. SYSTEM
SUSES 10PA & 10PB UNIT 1
GRAND GULF NUCLEAR STATION
UNIT 1
NUCLEAR PLANT ENGINEERING
UPPER-TIER DRAWING OPERATIONS CRITICAL
RELAY TABLE
MFL No. 1R211025E
E-1008
E-1008
NONE
023

Figure 8.3-2

DELETED

Figure 8.3-3

DELETED

Figure 8.3-4

DELETED

Figure 8.3-5

DELETED

Figure 8.3-6

DELETED

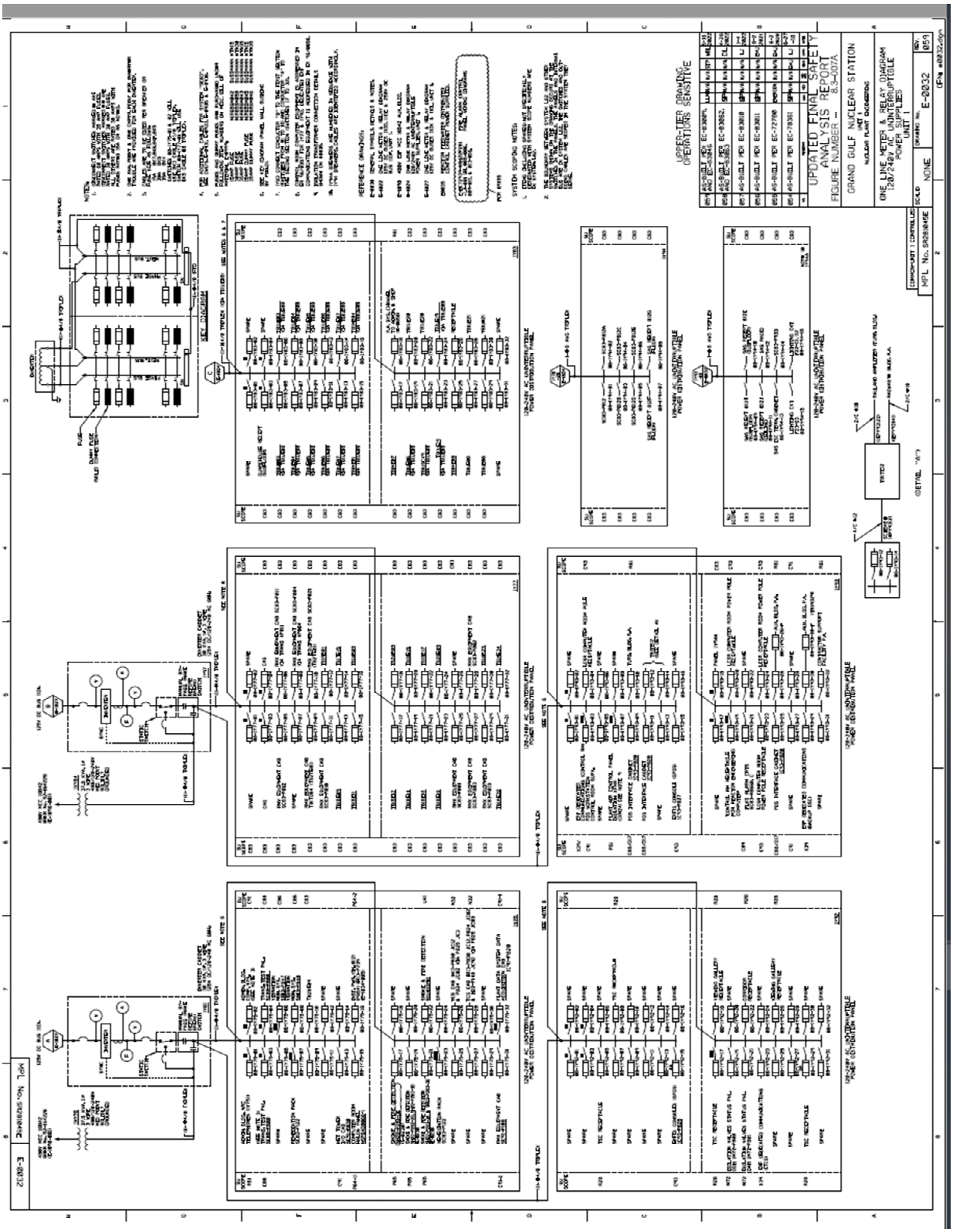
UPDATED FINAL SAFETY ANALYSIS REPORT
FIGURE NUMBER – 8.3-007A
GRAND GULF NUCLEAR STATION UNIT 1
NUCLEAR PLANT ENGINEERING
ONE LINE METER & RELAY DIAGRAM 120/240V AC UNINTERRUPTIBLE POWER SUPPLIES UNIT 1
SCALE NONE
DRAWING No. E-0032
REV 059
MFL No. 5928646E
E-0032
UNINTERRUPTIBLE POWER DISTRIBUTION PANEL

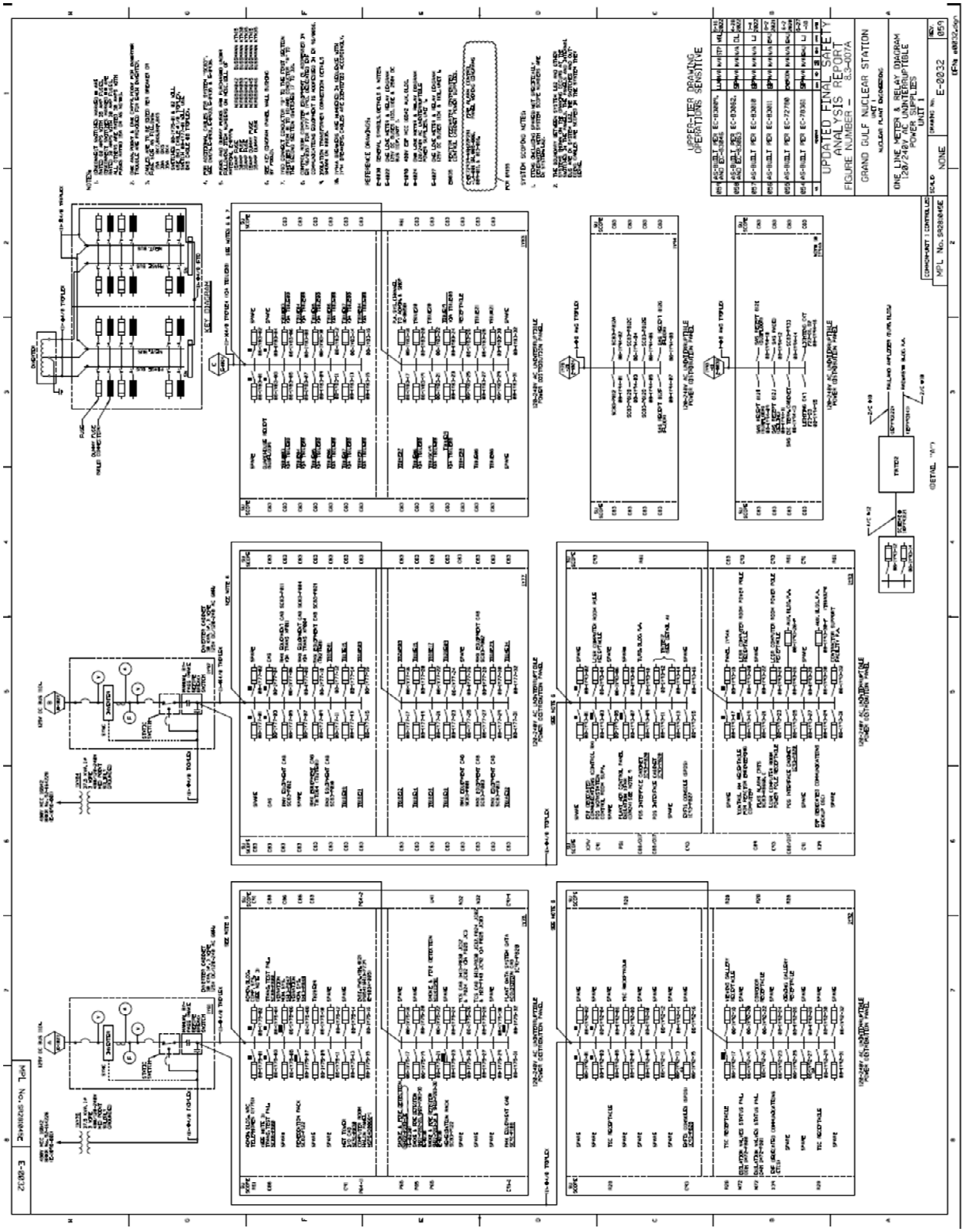
UPDATED FINAL SAFETY ANALYSIS REPORT
FIGURE NUMBER - 8.3-107A
GRAND GULF NUCLEAR STATION
UNIT 1
ONE LINE METER & RELAY DIAGRAM
120/240V AC UNINTERRUPTIBLE POWER SUPPLIES
UNIT 1
E-0032
NONE

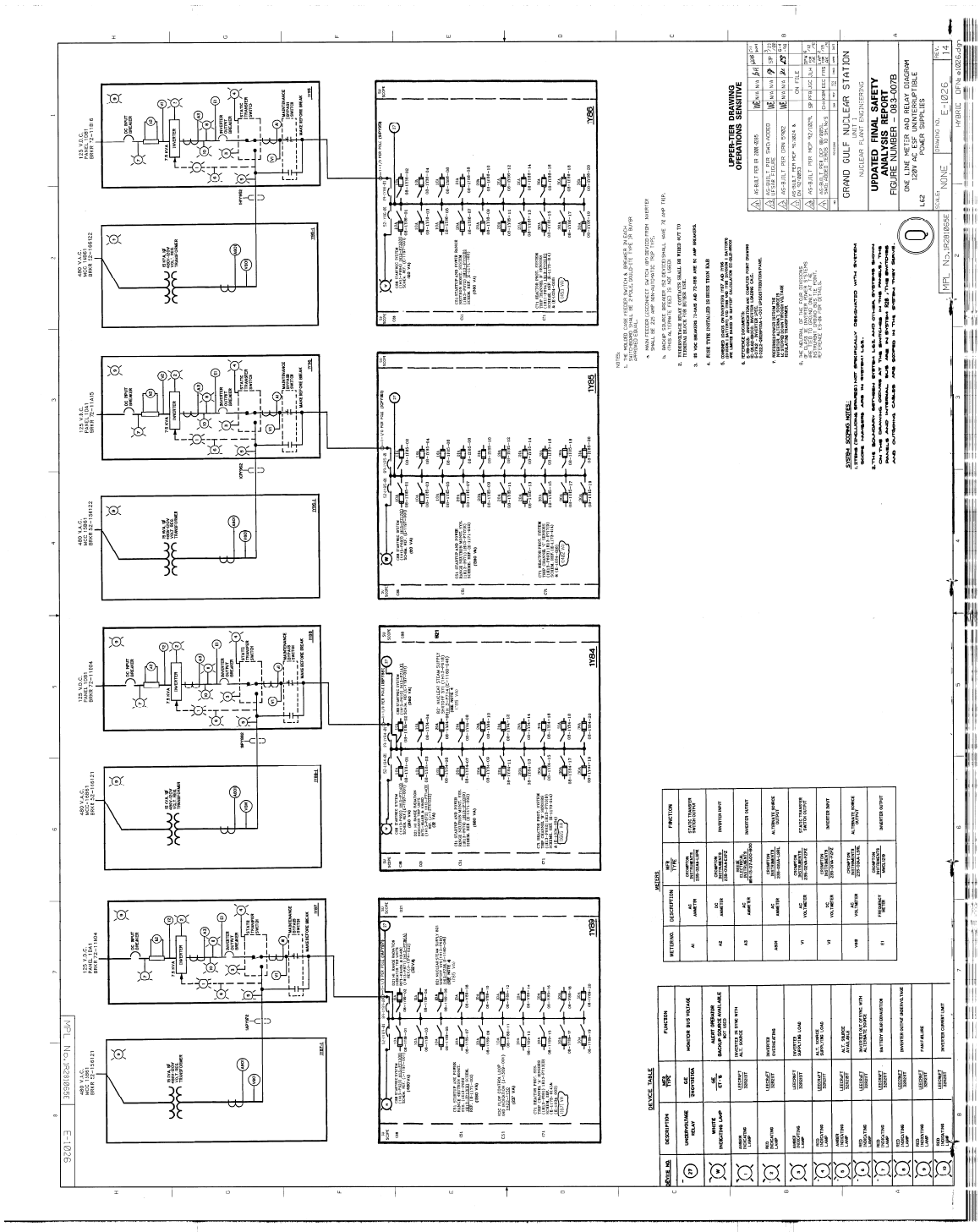
UPDATED FINAL SAFETY ANALYSIS REPORT
FIGURE NUMBER 8B3-007B
ONE LINE METER AND RELAY DIAGRAM
120V AC ESF UNINTERRUPTIBLE POWER SUPPLIES
GRAND GULF NUCLEAR STATION
UPPER-TIER DRAWING OPERATIONS SENSITIVE
DEVICE TABLE
METERS
E-1026

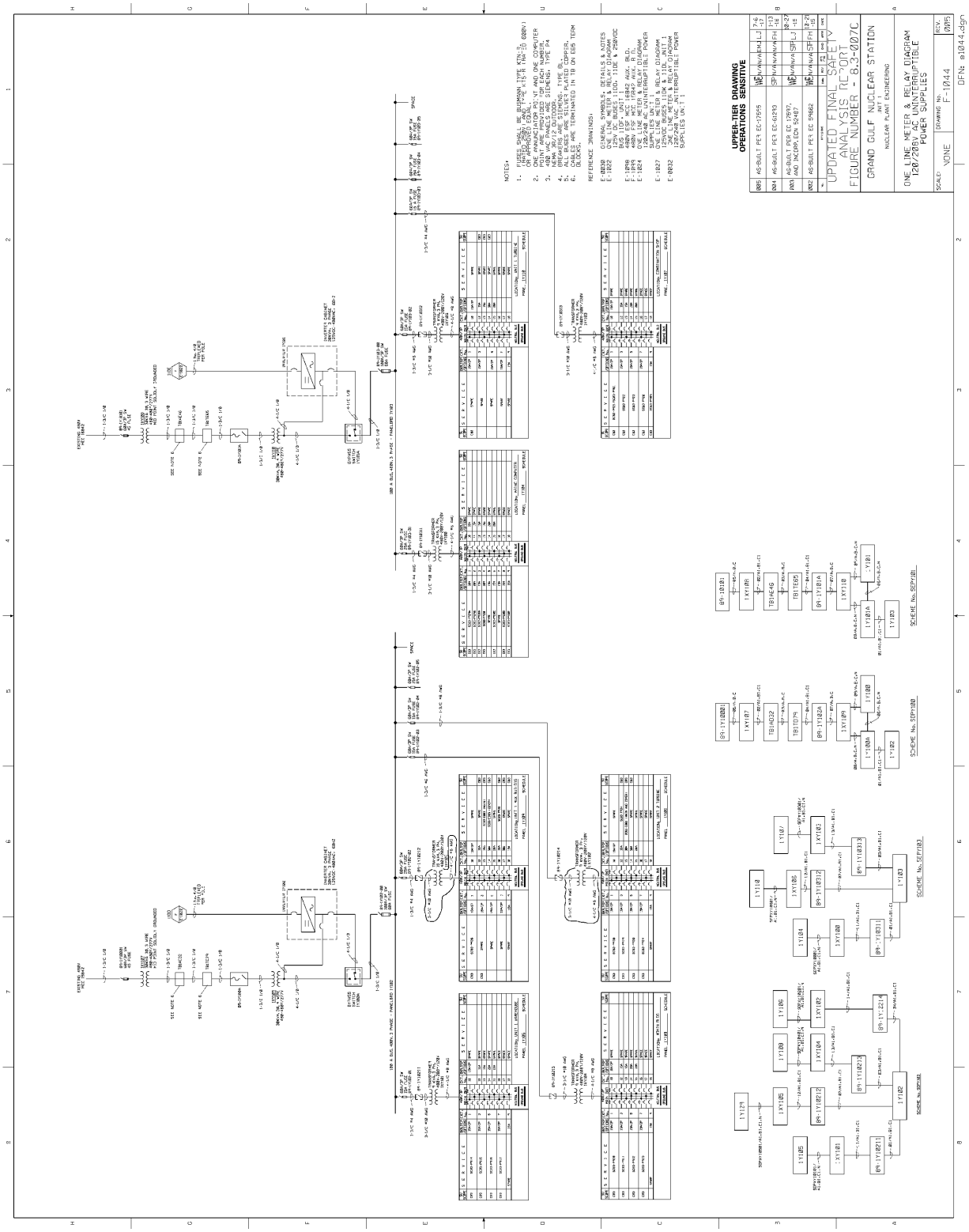
UPPER-TIER DRAWING
OPERATIONS SENSITIVE
UPDATED FINAL SAFETY
ANALYSIS REPORT
FIGURE NUMBER - 8.3-007C
GRAND GULF NUCLEAR STATION
NUCLEAR PLANT ENGINEERING
ONE LINE METER & RELAY DIAGRAM
120/208V AC UNINTERRUPTIBLE
POWER SUPPLIES
SCALE NONE
DRAWING No. F-1044
REV. 0
DFN: e1044.dgn

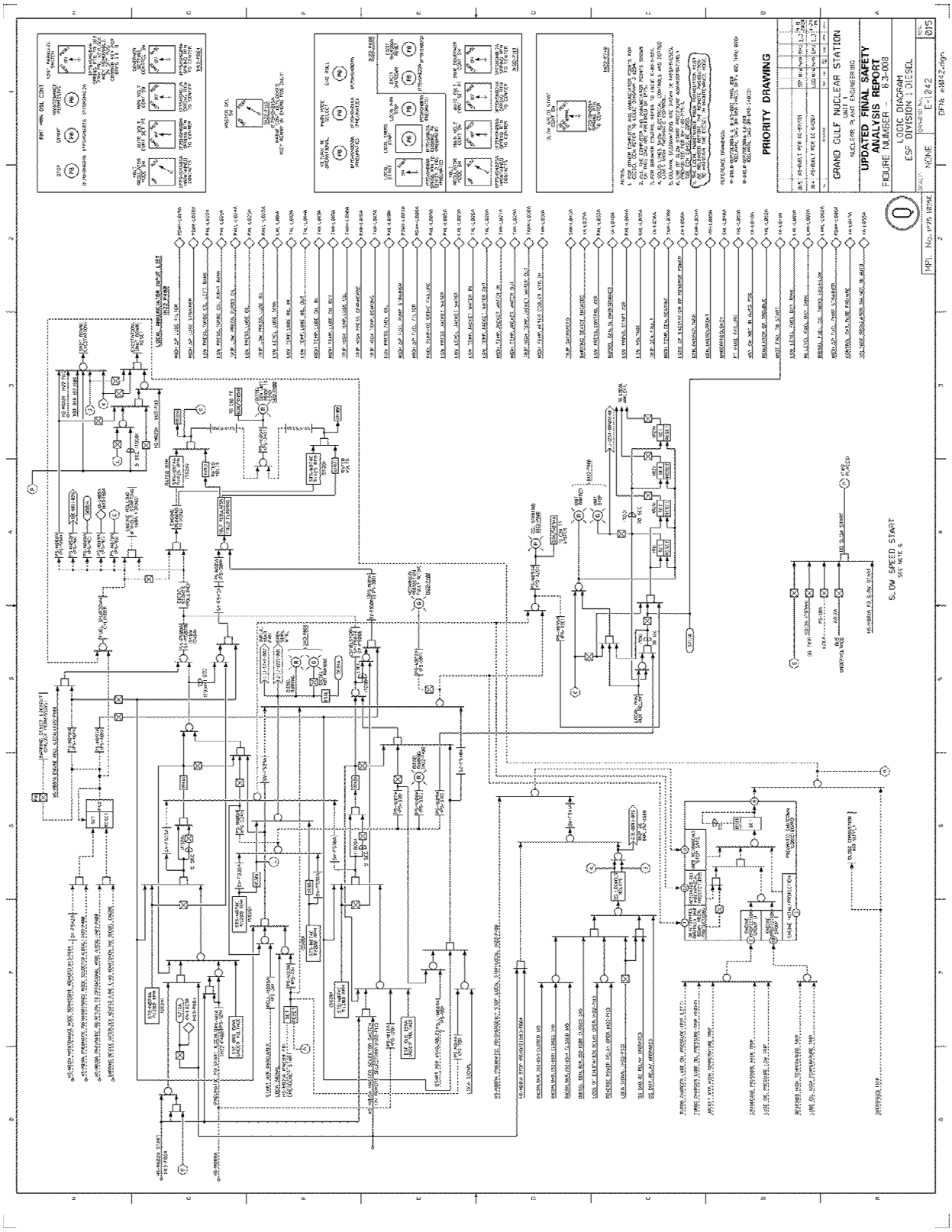
PRIORITY DRAWING
GRAND GULF NUCLEAR STATION
UPDATED FINAL SAFETY ANALYSIS REPORT
FIGURE NUMBER - 8.3-003
LOGIC DIAGRAM
ESF DIVISION I DIESEL
E-1242
SLOW SPEED START

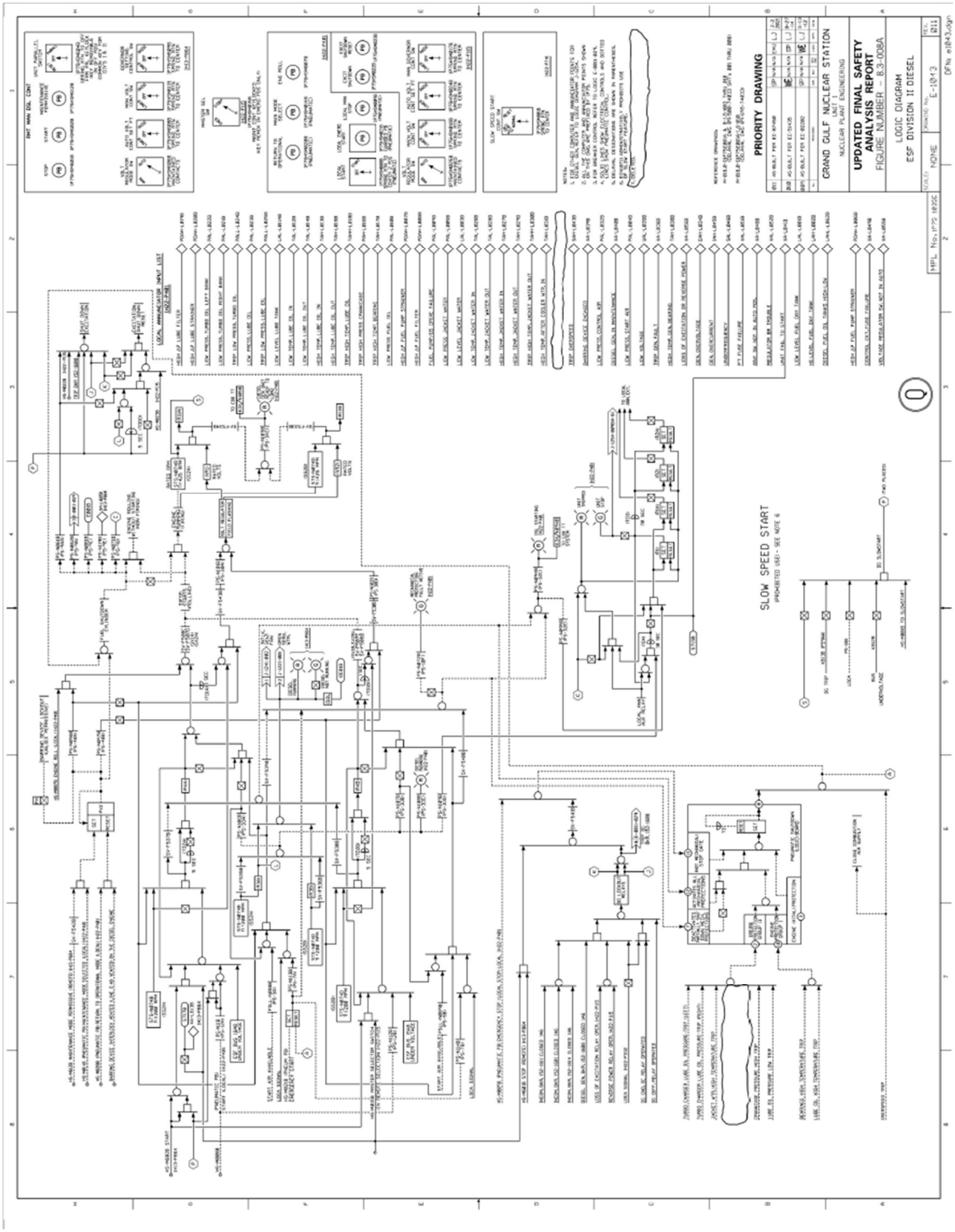
PRIORITY DRAWING
GRAND GULF NUCLEAR STATION
UNIT 1
NUCLEAR POWER ENGINEERING
UPDATED FINAL SAFETY ANALYSIS REPORT
FIGURE NUMBER - 8.3-008A
LOGIC DIAGRAM
ESF DIVISION II DIESEL
SCALE: NONE
DRAWING No. E-1013
REV. 211
SLOW SPEED START
PROHIBITED (SSS) - SEE NOTE 5

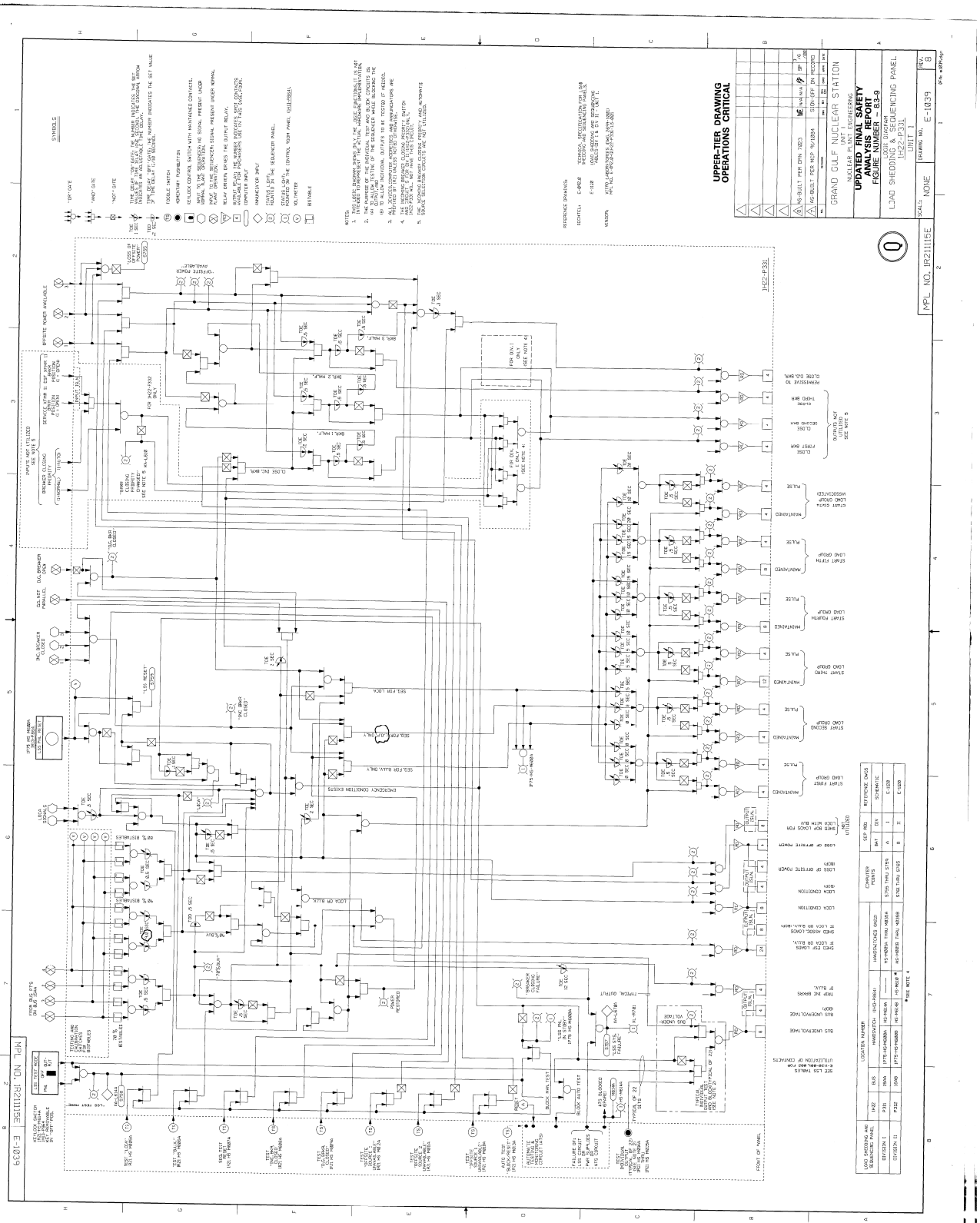
UPPER-TIER DRAWING
OPERATIONS CRITICAL
GRAND GULF NUCLEAR STATION
UNIT 1
NUCLEAR PLANT ENGINEERING
UPDATED FINAL SAFETY
ANALYSIS REPORT
FIGURE NUMBER - 8.3-9
LOAD SHEDDING & SEQUENCING PANEL
1H22-P33L
DRAWING NO. E-1039
SCALE: NONE
MPL NO. 1R211115E

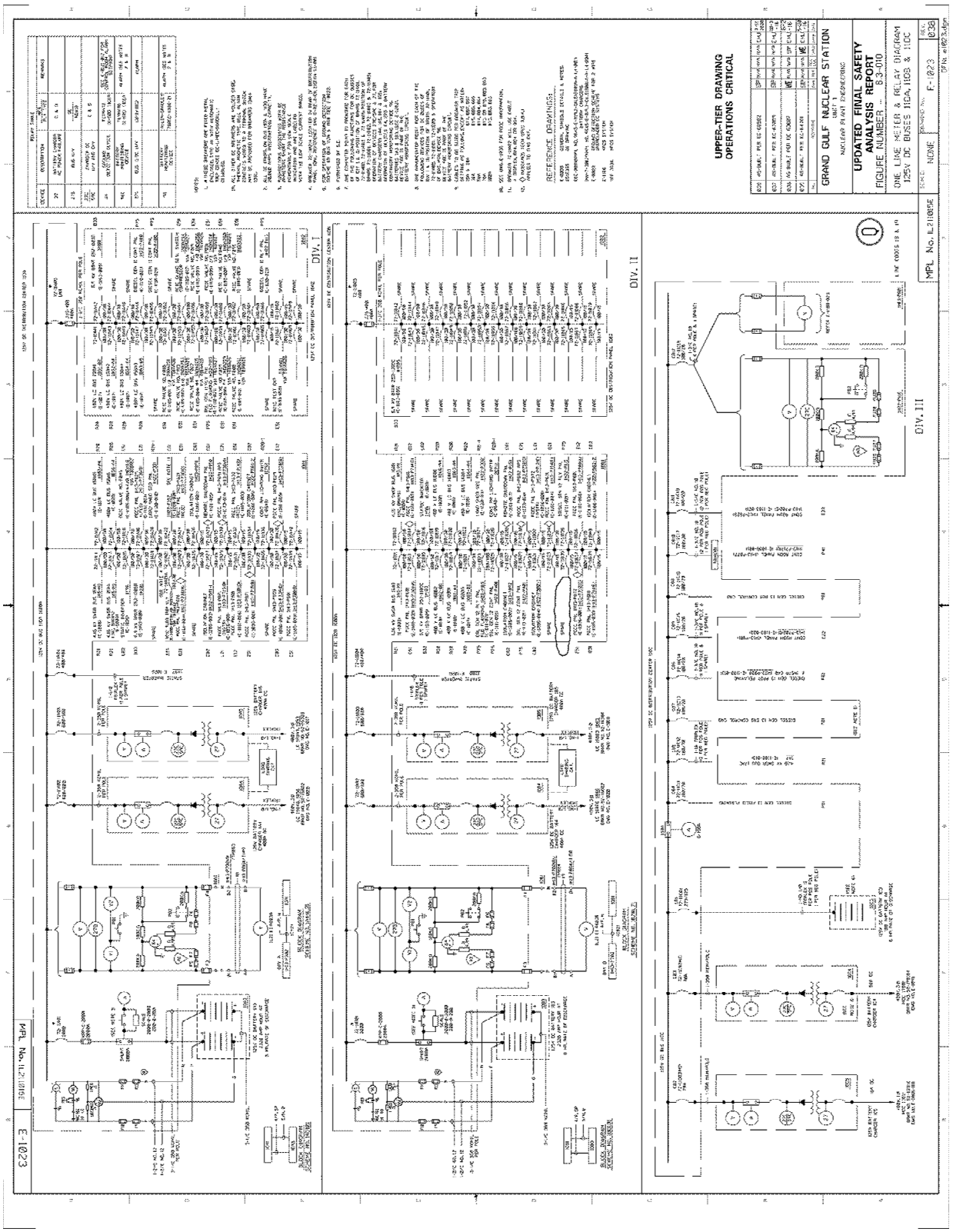
UPPER-TIER DRAWING
OPERATIONS CRITICAL
GRAND GULF NUCLEAR STATION
UNIT 1
NUCLEAR POWER ENGINEERING
UPDATED FINAL SAFETY
ANALYSIS REPORT
FIGURE NUMBER 8.3-010
ONE LINE METER & RELAY DIAGRAM
125V DC BUSES 11GA,11GB & 11GC
MPL No. E-1023
DIV. I
DIV. II
DIV. III

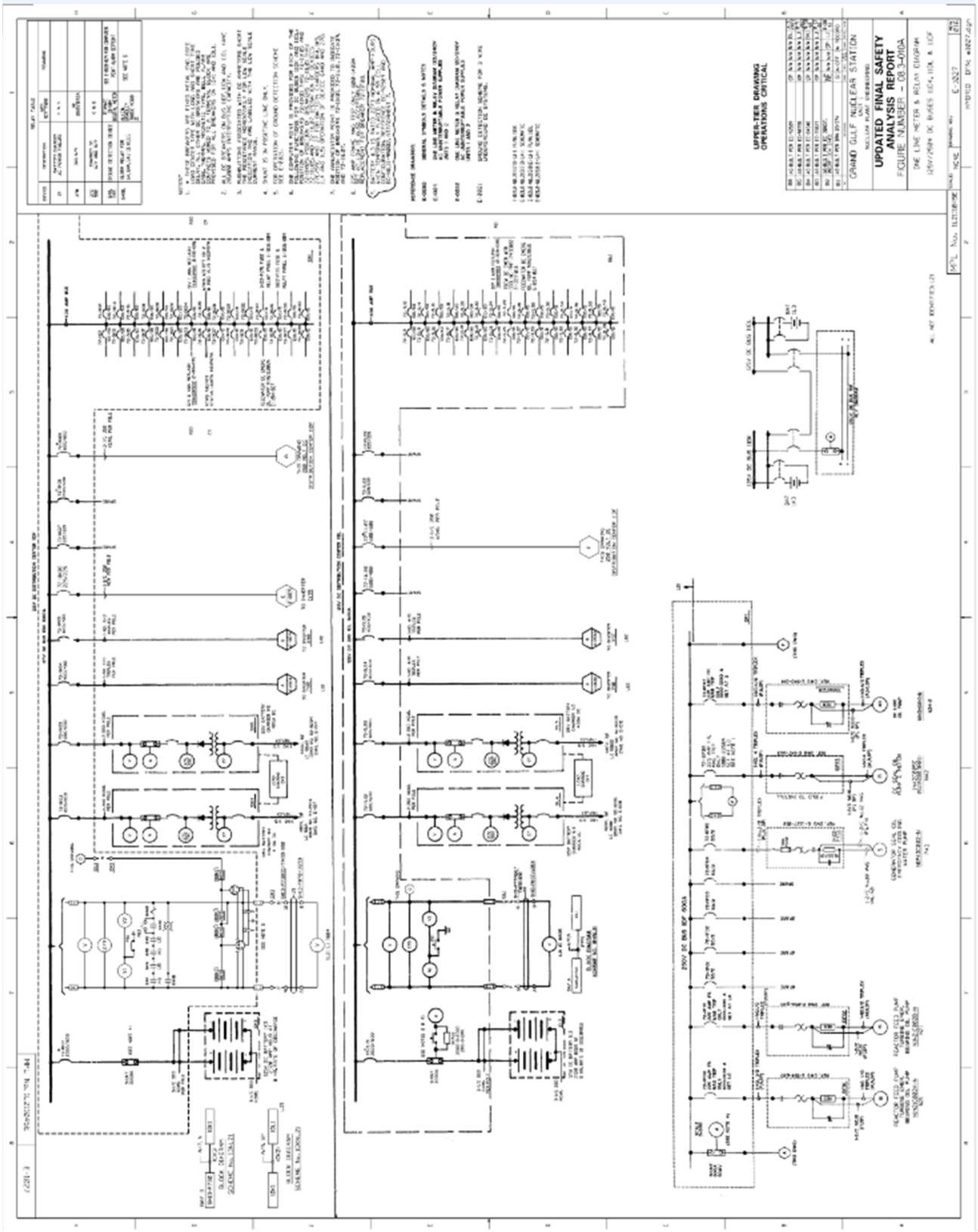
UPPER-TIER DRAWING
OPERATIONS CRITICAL
GRAND GULF NUCLEAR STATION
UNIT 1
UPDATED FINAL SAFETY
ANALYSIS REPORT
FIGURE NUMBER - 08.3-010A
DC LINE METER & RELAY DIAGRAM
125V/250V DC BUSES 1D24, 1D11 & 1D2F
E-3027

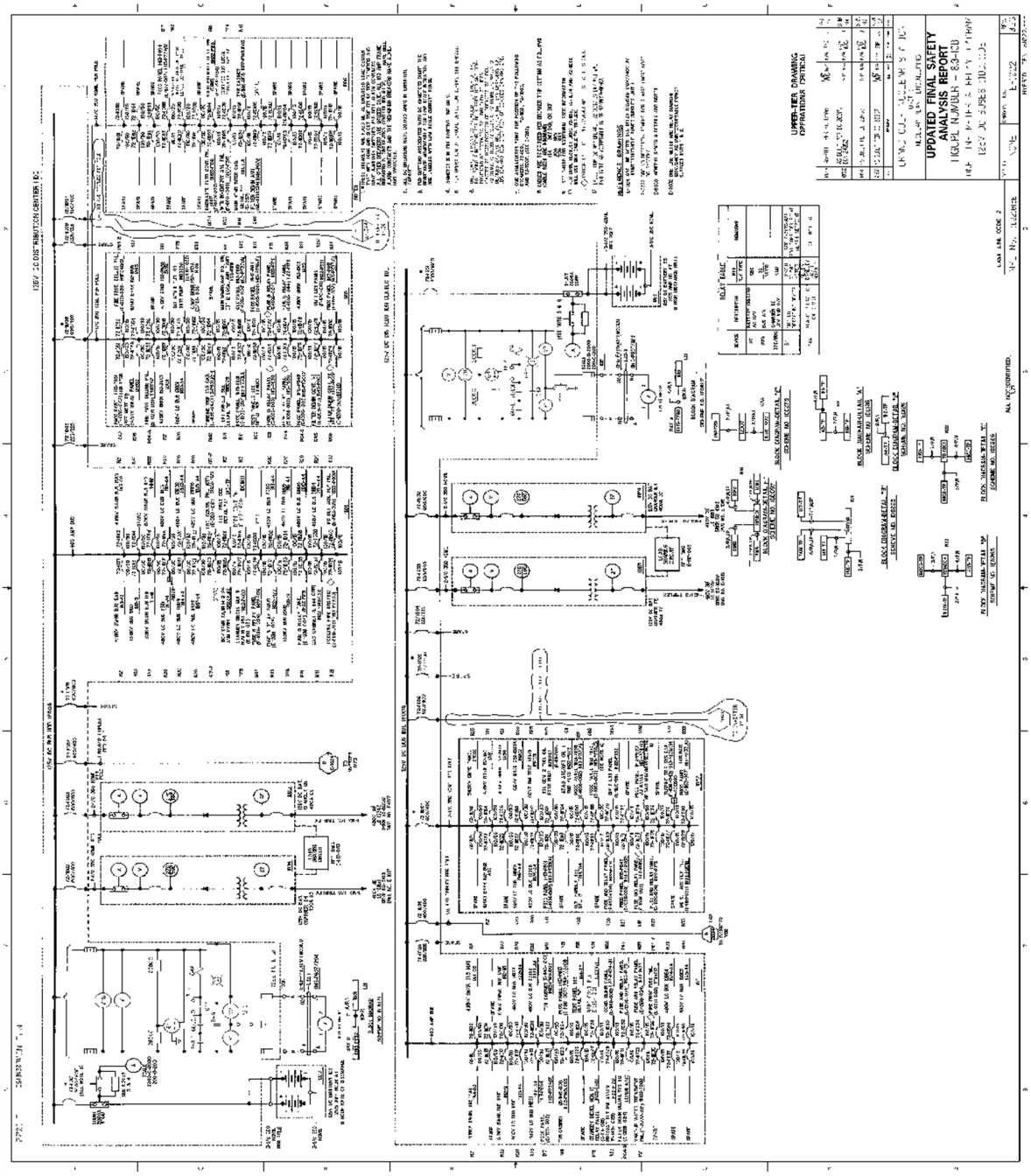
UPDATED FINAL SAFETY
ANALYSIS REPORT
FIGURE NUMBER - 8.3-1CD

Figure 8.3-11

DELETED

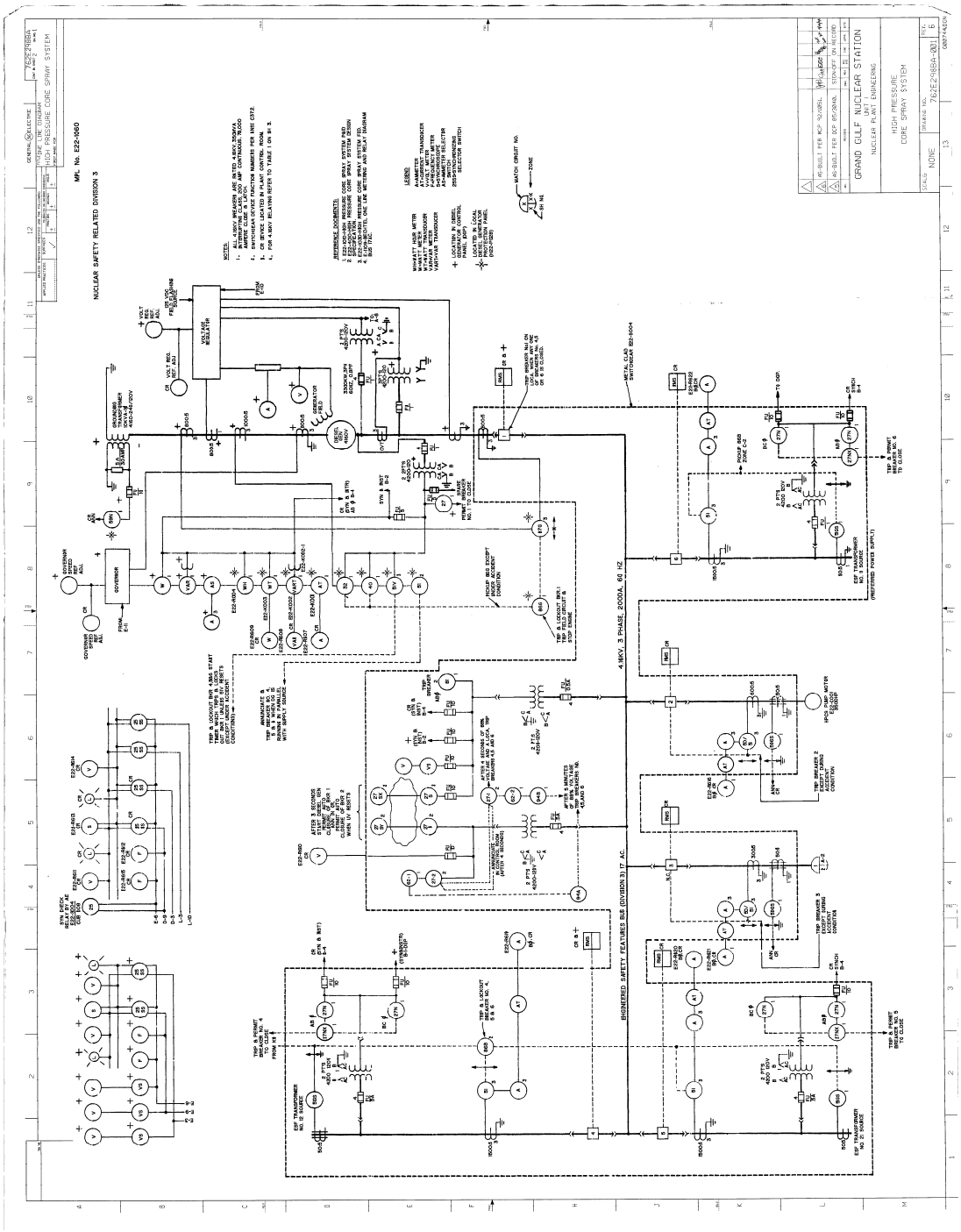
GRAND GULF NUCLEAR STATION
UNIT 1
NUCLEAR PLANT ENGINEERING
HIGH PRESSURE
CORE SPRAY SYSTEM
NUCLEAR SAFETY RELATED DIVISION 3
ENGINEERED SAFETY FEATURES BUS (DIVISION 3) 17 AC.
4.16KV, 3 PHASE, 2000A, 60 HZ

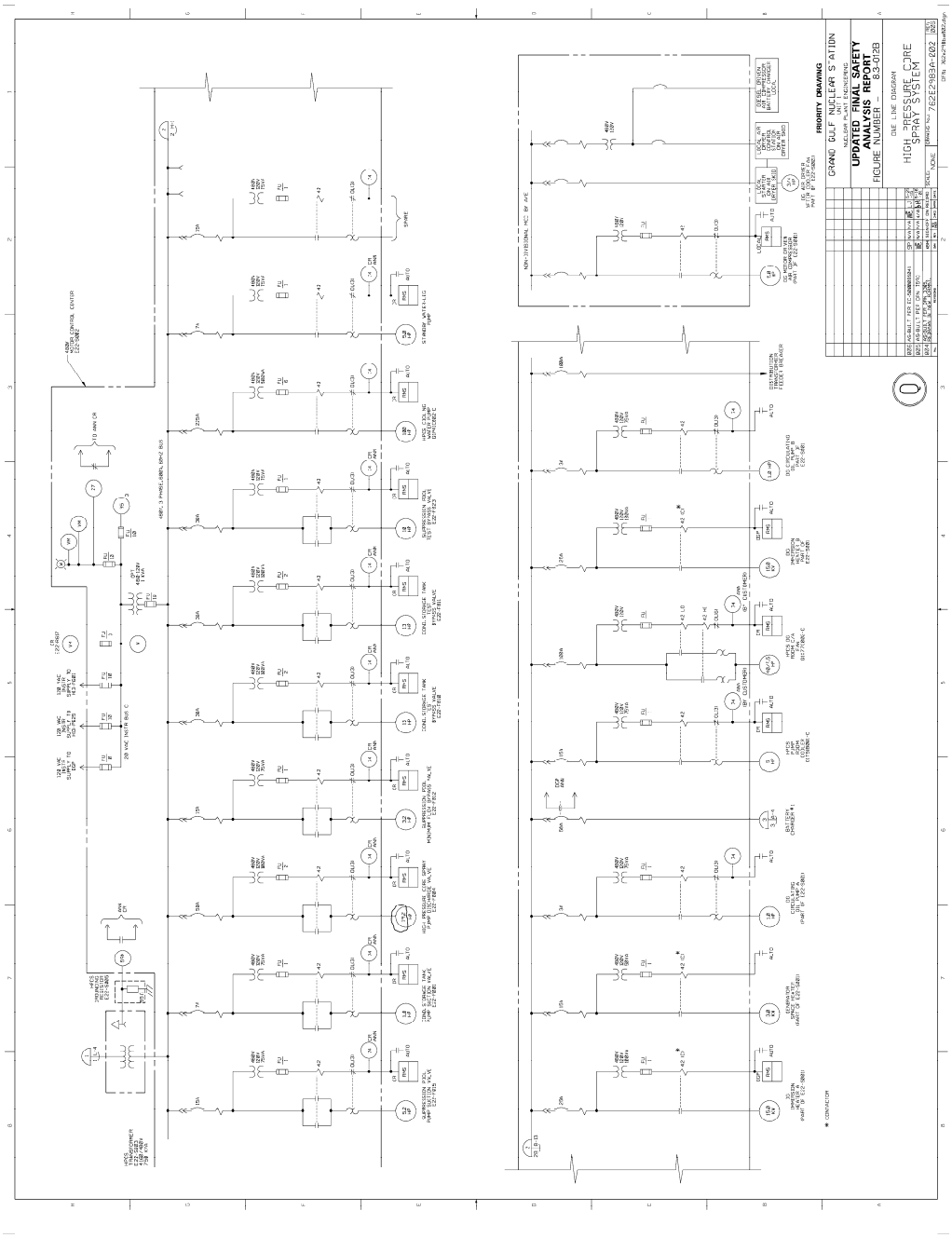
GRAND GULF NUCLEAR STATION
UPDATED FINAL SAFETY ANALYSIS REPORT
FIGURE NUMBER - 8.3-92B
ONE LINE DIAGRAM
HIGH PRESSURE CORE SPRAY SYSTEM
PRIORITY DRAWING
DRAWING NO. 72E2983A-002

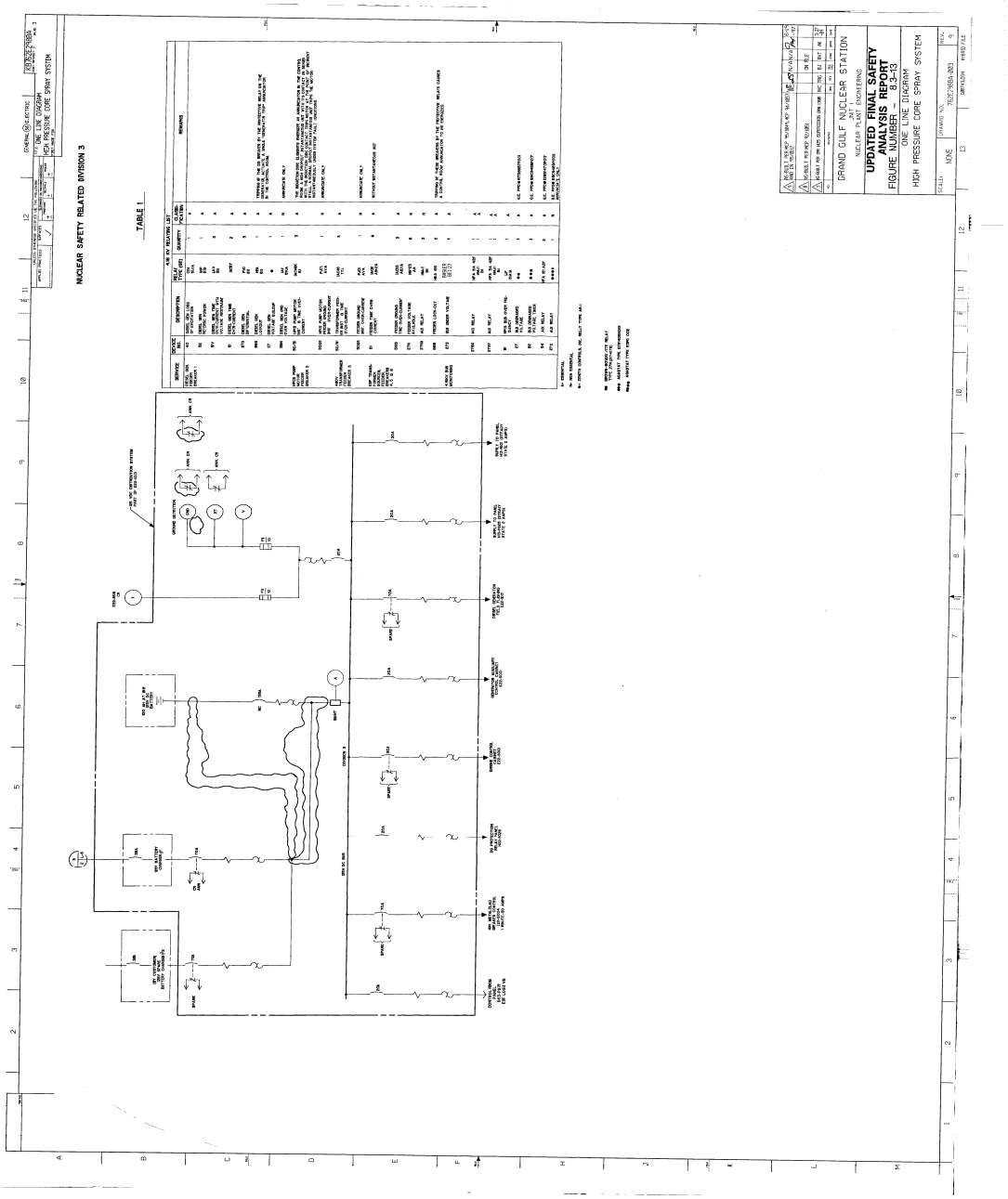
NUCLEAR SAFETY RELATED DIVISION 3
TABLE 1
GRAND GULF NUCLEAR STATION
NUCLEAR PLANT ENGINEERING
UPDATED FINAL SAFETY ANALYSIS REPORT
FIGURE NUMBER 8.3-53
ONE LINE DIAGRAM
HIGH PRESSURE CORE SPRAY SYSTEM

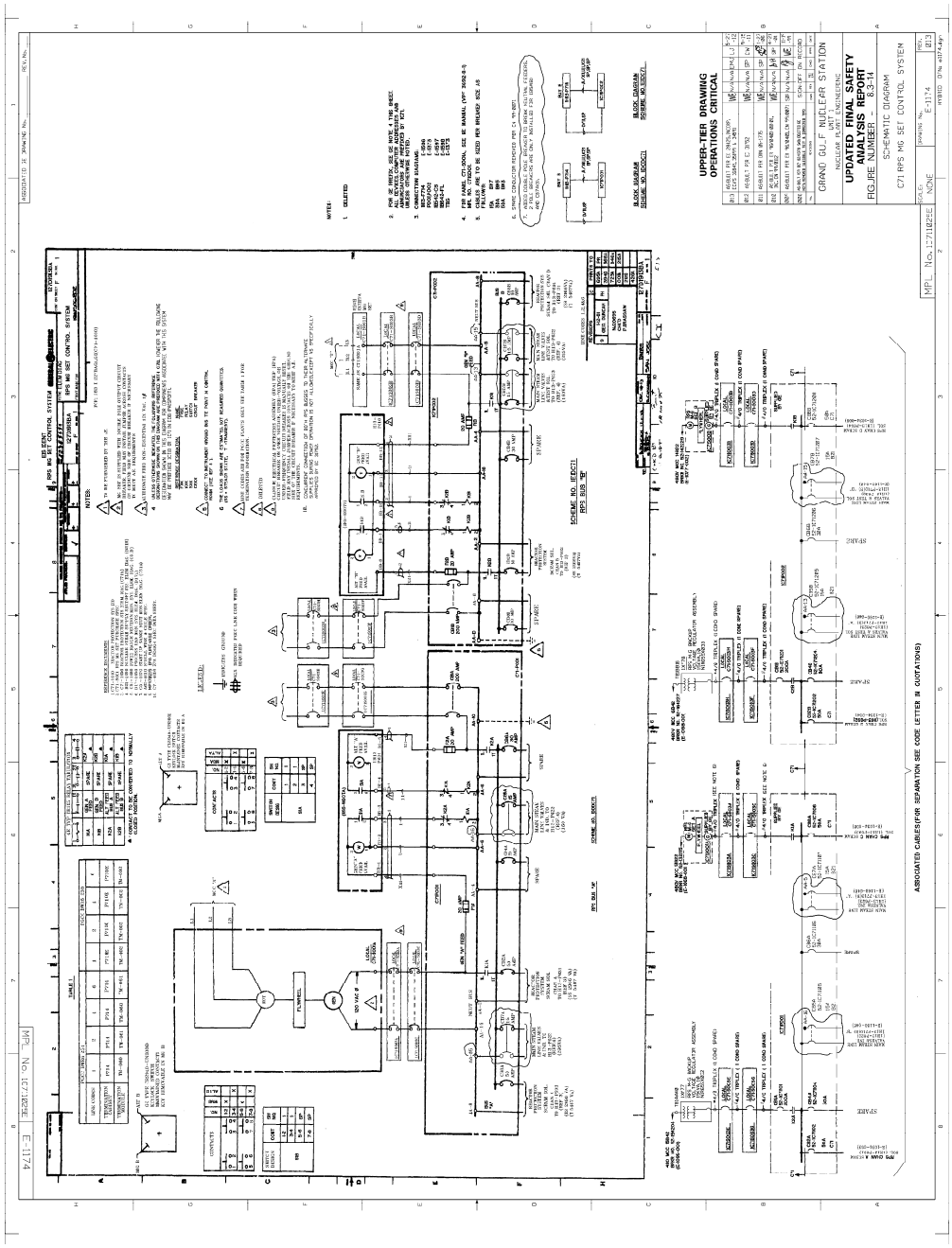
UPPER-TIER DRAWING
OPERATIONS CRITICAL
GRAND GULF NUCLEAR STATION
UPDATED FINAL SAFETY
ANALYSIS REPORT
FIG.JPE NUMBER - 8.3-14
SCHEMATIC DIAGRAM
C71 RPS M6 SET CONTROL SYSTEM
ASSOCIATED CABLES(FOR SEPARATION SEE CODE LETTER IN QUOTATIONS)

APPENDIX 8A LOSS OF ALL ALTERNATING CURRENT POWER (STATION BLACKOUT)

On July 21, 1988, the Code of Federal Regulations, 10 CFR Part 50, was amended to include a new Section 50.63 entitled, "Loss of All Alternating Current Power", (Station Blackout). The Station Blackout (SBO) Rule requires that each light-water-cooled nuclear power plant be able to withstand and recover from an SBO of a specified duration.

Regulatory Guide 1.155, "Station Blackout", which describes a means acceptable to the NRC staff for meeting the requirements of 10CFR50.63, states that NUMARC 87-00, "Guidelines and Technical Bases for NUMARC initiatives Addressing Station Blackout at Light Water Reactors", provides guidance that is, in large part, identical to the RG 1.155 guidance and is acceptable to the NRC staff for meeting those requirements.

The requirements of the SBO rule have been evaluated using guidance from NUMARC 87-00 except where RG 1.155 takes precedence.

8A.1 Station Blackout Duration

The required minimum coping duration for GGNS has been calculated to be 4 hours. This was based on a plant AC power design characteristic Group "P1",and Emergency AC (EAC) power configuration Group "C", and a target Emergency Diesel Generator (EDG) reliability of 0.95. The "P1", grouping is based on an independence of offsite power classification of Group "I 1/2", a severe weather (SW) classification of Group "2", an extremely severe weather (ESW) classification of Group "2", and an expected grid-related LOOP frequency of once per 20 years as defined in NUMARC 87-00. The Group "C" EAC configuration is based on 2 EDGs not credited as AAC power supplies with 1 EDG required to operate safe shutdown equipment following a loss of offsite power. The target EDG reliability was based on GGNS having an average EDG reliability greater the 0.90 over the last 20 demands consistent with NUMARC 87-00, Section 3.2.4.

8A.2 Station Blackout Coping Capability

GGNS utilizes a coping strategy independent of an alternate AC power source for the required SBO coping duration of 4 hours and the subsequent recovery. The characteristics of the following plant systems and components assure that the systems have the availability, adequacy, and capability to achieve and maintain a safe shutdown and to recover from an SBO for the required 4 hour coping duration.

8A.3 Condensate Inventory For Decay Heat Removal

The design of the condensate storage tank (CST) is such that all the suction lines except the high pressure core spray (HPCS) and the reactor core isolation cooling (RCIC) systems are connected to the CST via standpipes to prevent drawdown below 18.9 ft level indication. This design ensures that more than the 136,014 gallons of water required to cope with a 4-hour SBO event is maintained.

8A.4 Class 1E Battery Capacity

The Class 1E Division-II batteries are of sufficient capacity to meet SBO loads for 4 hours. The Class 1E Division-I batteries are of sufficient capacity if appropriate load shedding is accomplished. Plant procedures were revised to include a requirement to strip the RCIC gland seal compressor if both Division I and II ESF busses are lost due to a loss of AC power. Stripping of the RCIC gland seal compressor is not essential for any one single operation of the RCIC turbine and therefore stripping the RCIC gland seal compressor during SBO conditions will not adversely affect RCIC operation.

8A.5 Compressed Air

Air-operated valves relied upon to cope with a station blackout for four hours can either be operated manually or have sufficient backup sources independent of the preferred Class 1E power supply. Valves requiring manual operation or that need backup sources for operation are identified in plant procedures.

8A.6 Effects of Loss of Ventilation

The effects of loss of ventilation in the control room, upper cable spreading room, HPCS pump room, RCIC pump room, steam tunnel, switchgear/inverter room and the drywell were evaluated. The effects of loss of ventilation on each of these areas is outlined below.

8A.6.1 Control Room and Upper Cable Spreading Room

The peak control room and upper cable spreading room temperatures were calculated and were confirmed to be less than 120 degrees F. The Off-Normal Event Procedure for SBO was revised to open control room panel doors of cabinets containing instrument and control equipment right after the more critical steps required to restore offsite power were accomplished. This was done to provide reasonable assurance that the doors would be opened within 30 minutes of completion of the critical actions.

8A.6.2 HPCS Pump Room

The calculated peak temperature in the HPCS pump room during an SBO event was 150 degrees F which is also the design operating temperature for the room. No credit was taken for HPCS operation in coping with the postulated SBO event.

8A.6.3 RCIC Room

The calculated peak temperature in the RCIC pump room during an SBO event is 175 degrees F. The SBO response equipment in the RCIC room has been assessed in accordance with Appendix F to NUMARC 87-00 and/or the Topical Report. No modifications or associated procedures are required to provide reasonable assurance of the operability of station blackout response equipment in the RCIC room.

8A.6.4 Steam Tunnel

The need to evaluate the temperature in the main steam tunnel area is based on a potential RCIC steam line isolation due to high tunnel temperature. No credit was taken for long term operation of other systems besides RCIC. A requirement was added to the Loss of AC Power ONEP to bypass the RCIC steamline high temperature isolation to prevent isolation following loss of

steam tunnel cooling. Therefore, the steam tunnel is not considered to be a dominant area of concern for the postulated SBO.

8A.6.5 Switchgear/Inverter Room

The evaluation of the switchgear/inverter room heat-up following an SBO is based upon a design basis calculation for loss-of-power and loss-of-coolant-accident (LOCA) conditions. The temperatures are calculated for steady-state conditions without active cooling or forced ventilation of these areas. The steady-state temperature is based only on the heat input into the room from internal electrical heat loads and from the surrounding areas, assuming 95 degree F outside air temperature and accident conditions for adjacent rooms. The evaluation of heatup in these rooms included all of the heat loads for SBO condition, plus additional electrical heat loads for LOCA conditions. The LOCA heat loads due to mechanical equipment were excluded in the SBO heat-up evaluation. The only equipment that would be generating heat during an SBO would be dc distribution equipment, which was included in the evaluation.

8A.6.6 Drywell

An evaluation of the drywell heatup during an SBO event was done which included the heat load due to recirculation pump seal leakage of 36 gpm. The evaluation confirmed that peak temperature is below the design temperature of 330 degrees F. The suppression pool peak temperature was also confirmed to be below the design temperature of 210 ˚F.

8A.7 Containment Isolation

An evaluation was done to ensure that containment integrity can be provided during a 4-hour SBO at GGNS. Containment integrity must be established in an SBO event only when core damage becomes imminent. Table 6.2-44, Containment Isolation Valve Information was reviewed to verify that valves which must be capable of being closed or that must be operated under SBO conditions can be positioned (with indication) independent of the preferred and blacked out Class 1E AC power supplies.

Valves that met the following criteria were excluded from consideration:

1. Valves that are required by station procedures to be closed during normal operation at all times (except for brief intervals during testing) and are expected to remain closed during an SBO (as long as position indication is available in the control room prior to the SBO)

2. Valves which have redundant in-line valves which provide the required containment integrity

3. Valves that fail closed on loss of AC power or air

4. Check valves

5. Valves in non-radioactive closed-loop systems not expected to be breached in an SBO (with the exception of lines that communicate directly with the containment atmosphere)

6. Valves in radioactive closed-loops systems that are not expected to be breached during a station blackout provided these loops:

   a. connect directly to the suppression pool

   b. are provided with a single isolation valve

   c. are always submerged thereby preventing the escape of containment atmosphere

   d. where the piping outside containment constitutes a closed system providing a second isolation barrier following a single active failure

7. All valves in lines less than 3 inches in diameter

8. Valves that are designed to be open during accident conditions and/or that do not receive closure signals from the containment isolation logic

9. Process actuated pressure relief valves that discharge into the suppression pool and will not lift due to backpressure from the containment

10. Valves that have isolation logic that will prevent them from being open with the reactor at normal operating pressure (the postulated SBO is assumed to occur at 100% power)

11. Valves that are normally locked closed

Valves not excluded by these criteria are accessible and can be manually closed using the valve operator handwheel.

8A.8 Reactor Coolant Inventory

The relevant generic analysis from Section 2.5.2 of NUMARC 87-00 was used to assess the ability to maintain adequate reactor coolant system (RCS) inventory to ensure that the core is cooled for the postulated 4 hour SBO event. The analyses used are applicable to the specific design of GGNS. The expected rates of reactor coolant inventory loss under SBO conditions do not result in more than a momentary core uncovery in an SBO of 4 hours. Therefore, makeup systems in addition to those currently available under SBO conditions are not required to maintain core cooling under natural circulation (including reflux boiling).

8A.9 Procedures

The following procedure changes were made to respond to an SBO:

1. Procedures were revised to include guidance for the control room personnel to open all control room panel doors as soon as practical following loss of both Division I and II ESF busses and to leave them open until power is restored to at least one of these busses.

2. Procedures were revised to direct the operators to maintain suction from the CST with RCIC and HPCS even if interlocks must be jumpered to defeat them. The loss of AC ONEP was revised to reflect the same requirement.

3. A requirement to trip the RCIC gland seal compressor if both Division I and II ESF busses are lost was added to procedures.

4. Procedures were revised to require the operator to bypass the RCIC steam line high temperature isolation to prevent isolation following loss of steam tunnel cooling.

8A.10 Quality Assurance

The equipment used for coping with and recovering from an SBO event is safety related with the exception of the CST. The CST is the primary water supply for RCIC in response to an SBO event. The safety related equipment is covered under quality assurance

(QA) requirements in accordance with 10 CFR 50, Appendix B. A review of RG 1.155, Appendix B was done for the CST to ensure that the CST will perform its function during an SBO.

8A.11 Emergency Diesel Generator Reliability Program

An EDG reliability program which conforms to the guidelines of RG 1.155, position 1.2 was implemented to maintain a target diesel reliability of 0.95. The target EDG reliability of 0.95 was selected based on having an average EDG reliability of greater the 0.90 for the last 20 demands consistent with NUMARC 87-00 Section 3.2.4.

8A.12 Spent Fuel Pool

Although the spent fuel pool storage facility was not considered as part of the SBO analysis, FPCC was evaluated for a loss of power event during a plant refueling outage. This evaluation considered the spent fuel high density storage racks. See Section
9.1.3 for discussion.