ENCLOSURE 2

SHINE TECHNOLOGIES, LLC

SHINE TECHNOLOGIES, LLC APPLICATION FOR AN OPERATING LICENSE SUPPLEMENT NO. 30

FINAL SAFETY ANALYSIS REPORT CHANGE SUMMARY PUBLIC VERSION

Summary Description of Changes	FSAR Impacts
Administrative corrections, including correction of inconsistencies and typographical errors.	Figure 4a2.8-1, Section 7.1, Section 7.4, Section 7.5, Section 9b.6
Update to clarify the routing of the radiological ventilation zone 2 recirculating cooling subsystem (RVZ2r), including the removal of the RVZ2r supply to each of the eight cooling rooms.	Figure 9a2.1-6
Update to the source range detector type in the neutron flux detection system (NFDS) from boron trifluoride (BF_3) detectors to fission chambers.	Section 4a2.2, Table 4b.4-1, Section 7.8, Section 9a2.5
Update to the criticality safety basis of the material staging building.	Section 6b.3
Update to enhance the descriptions of the uninterruptible electrical power supply system (UPSS) and the standby generator system (SGS) to address recommendations of the Advisory Committee on Reactor Safeguards (ACRS) Subcommittee members.	Section 8a2.2, Table 8a2.2-1, Table 8a2.2-2
Update to clarify the ventilation zone designation of the radioactive liquid waste immobilization (RLWI) enclosure.	Figure 9a2.1-1
Update to add an engineered flow path from the cooling room to each irradiation unit (IU) cell, supplying radiological ventilation zone 1 exhaust subsystem (RVZ1e) makeup air.	Figure 6a2.2-1, Figure 7.4-1
Update to the analytical limits of safety-related process radiation monitors to provide quantitative values. Limiting Condition for Operation (LCO) 3.7.1 of the technical specifications has been revised to incorporate conforming changes.	Table 7.4-1, Table 7.5-1
Update to reflect revisions to Section 5.0, “Administrative Controls,” of the technical specifications resulting from the regulatory audit of the technical specifications.	Section 12.1, Section 12.2, Section 12.3, Section 12.4, Section 12.5, Section 12.6

Summary Description of Changes	FSAR Impacts
Update to remove the interface between the facility nitrogen handling system (FNHS) and the facility fire detection and suppression system (FFPS).	Section 9b.7, Table 9b.7-5
Update to add a vacuum transfer system (VTS) interlock to the process integrated control system (PICS) and remove PICS sequencing of standby generator system (SGS) loads.	Section 7.3
Update to clarify the instrumentation and control (I&C) architectures and the treatment of manual actuation signals by the target solution vessel (TSV) reactivity protection system (TRPS) and the engineered safety features actuation system (ESFAS).	Figure 7.1-1, Figure 7.1-2, Figure 7.1-3, Figure 7.4-1, Figure 7.5-1
Update to enhance the PICS system description and to summarize the SHINE evaluation of PICS failures resulting from the regulatory audit of the PICS.	Section 7.3
Update to clarify the treatment of the TRPS IU Cell Nitrogen Purge signals by ESFAS during the phased approach to operation of the SHINE facility.	No FSAR impacts Chapter 7 of the Phased Startup Operations Application Supplement has been revised to incorporate changes.

A markup of the Final Safety Analysis Report (FSAR) changes is provided as Attachment 1. Conforming Phased Startup Operations Application Supplement and technical specification markups associated with the above FSAR changes are provided as Attachments 2 and 3, respectively.

FSAR markups are incorporated into the FSAR revision provided in Enclosure 3 (non-public version) and Enclosure 4 (public version). FSAR markups which have been provided via References 1 through 3 and References 5 through 9 have also been incorporated into Enclosures 3 and 4.

Phased Startup Operations Application Supplement markups are incorporated into the Phased Startup Operations Application Supplement revision provided in Enclosure 5 (non-public version) and Enclosure 6 (public version). Phased Startup Operations Application Supplement markups which have been provided via Reference 8 have also been incorporated into Enclosures 5 and 6.

Technical specification markups are incorporated into the SHINE Technical Specifications revision provided in Enclosure 7 (non-public version) and Enclosure 8 (public version). Technical specifications markups which have been provided via References 1, 4, and 8 have also been incorporated into Enclosures 7 and 8. The SHINE Technical Specifications revision provided in Enclosures 7 and 8 incorporates changes discussed with the NRC Staff during regulatory audit interactions in June, July, and August 2022 (Reference 10).

References

1. SHINE Technologies, LLC letter to the NRC, “SHINE Technologies, LLC Application for an Operating License Supplement No. 18 and Response to Request for Additional Information,” dated March 9, 2022 (ML22068A217)

2. SHINE Technologies, LLC letter to the NRC, “SHINE Technologies, LLC Application for an Operating License Supplement No. 20 and Response to Request for Additional Information,” dated March 18, 2022 (ML22077A086)

3. SHINE Technologies, LLC letter to the NRC, “SHINE Technologies, LLC Application for an Operating License Revision 1 of SHINE Response to Part (c) of Request for Additional Information 7-9,” dated April 4, 2022 (ML22094A045)

4. SHINE Technologies, LLC letter to the NRC, “SHINE Technologies, LLC Application for an Operating License Supplement No. 21,” dated April 13, 2022 (ML22103A046)

5. SHINE Technologies, LLC letter to the NRC, “SHINE Technologies, LLC Application for an Operating License Response to Request for Additional Information,” dated April 22, 2022 (ML22112A195)

6. SHINE Technologies, LLC letter to the NRC, “SHINE Technologies, LLC Application for an Operating License Supplement No. 23,” dated June 10, 2022

7. SHINE Technologies, LLC letter to the NRC, “SHINE Technologies, LLC Application for an Operating License Supplement No. 25,” dated June 16, 2022

8. SHINE Technologies, LLC letter to the NRC, “SHINE Technologies, LLC Application for an Operating License Supplement No. 27,” dated July 7, 2022 (ML22188A055)

9. SHINE Technologies, LLC letter to the NRC, “SHINE Technologies, LLC Application for an Operating License Supplement No. 29,” dated July 26, 2022

10. NRC letter to SHINE Technologies, LLC, “SHINE Medical Technologies, LLC - Regulatory Audit of Technical Specifications Described in Operating License Application, (EPID No. L-2019-NEW-0004), dated June 2, 2022 (ML22152A108)

ENCLOSURE 2
ATTACHMENT 1

SHINE TECHNOLOGIES, LLC

SHINE TECHNOLOGIES, LLC APPLICATION FOR AN OPERATING LICENSE SUPPLEMENT NO. 30

FINAL SAFETY ANALYSIS REPORT CHANGE SUMMARY
PUBLIC VERSION

FINAL SAFETY ANALYSIS REPORT MARKUP

4a2.2.4.3 Source Strength

The source is required to provide greater than ~~6.5~~3.0E+0~~5~~6 neutrons per second (n/s).

4a2.2.4.4 Interaction with the System

The placement of the source is inside of a stainless steel capsule that is located below the tritium target chamber. This capsule is accessible when the target chamber is removed and the source is able to be inserted and removed using long-handled tools.

4a2.2.4.5 Physical Environment

The nominal temperature of the cooling water surrounding the source is approximately 68°F (20°C). The neutron source will be exposed to external neutron radiation up to [ ]PROP/ECI and external gamma radiation up to [ ]PROP/ECI.

4a2.2.4.6 Verification of Integrity and Performance

Leak and contamination tests of the subcritical multiplication source are performed prior to use in the SHINE facility. Neutron strength measurements are made to ensure the stated activity prior to operation using the source.

4a2.2.4.7 Technical Specifications

There are no technical specifications applicable to the subcritical multiplication source.

4a2.2.5 SUBCRITICAL ASSEMBLY SUPPORT STRUCTURE

The TSV maintains the location and shape of the target solution during irradiation. The SASS positions the TSV relative to the neutron driver, neutron multiplier, subcritical multiplication source, and neutron flux detectors as shown in Figure 4a2.1-2. The SASS contains the TSV and supports TSV dump lines, TSV overflow lines, TOGS components, and associated instrumentation.

The SASS channels cooling water around the TSV and neutron multiplier. The PCLS is attached to the SASS upper and lower plenums. The PCLS forces cooling water to pass [ ]PROP/ECI along the TSV inner and outer shells, and around the neutron multiplier to remove heat from the TSV and neutron multiplier during operation.

The SASS and PSB components are designed to withstand the design basis loads, including thermal, seismic, and hydrodynamic loads imposed by the light water pool during a seismic event. Hydrodynamic loads to safety-related equipment submerged within the light water pools were applied considering hydrodynamic added mass and drag forces from sloshing pool water. These hydrodynamic loads were calculated using the maximum vertical displacement of sloshing pool water determined using the methods in Section 9 of ACI 350.3-06, Seismic Design of Liquid-Containing Concrete Structures and Commentary (ACI, 2006). In addition, the SASS and supported PSB components are designed to withstand normal operating loads imposed by the

Figure 4a2.8-1 – Subcritical Assembly System and TSV Off-Gas System Flow Diagram

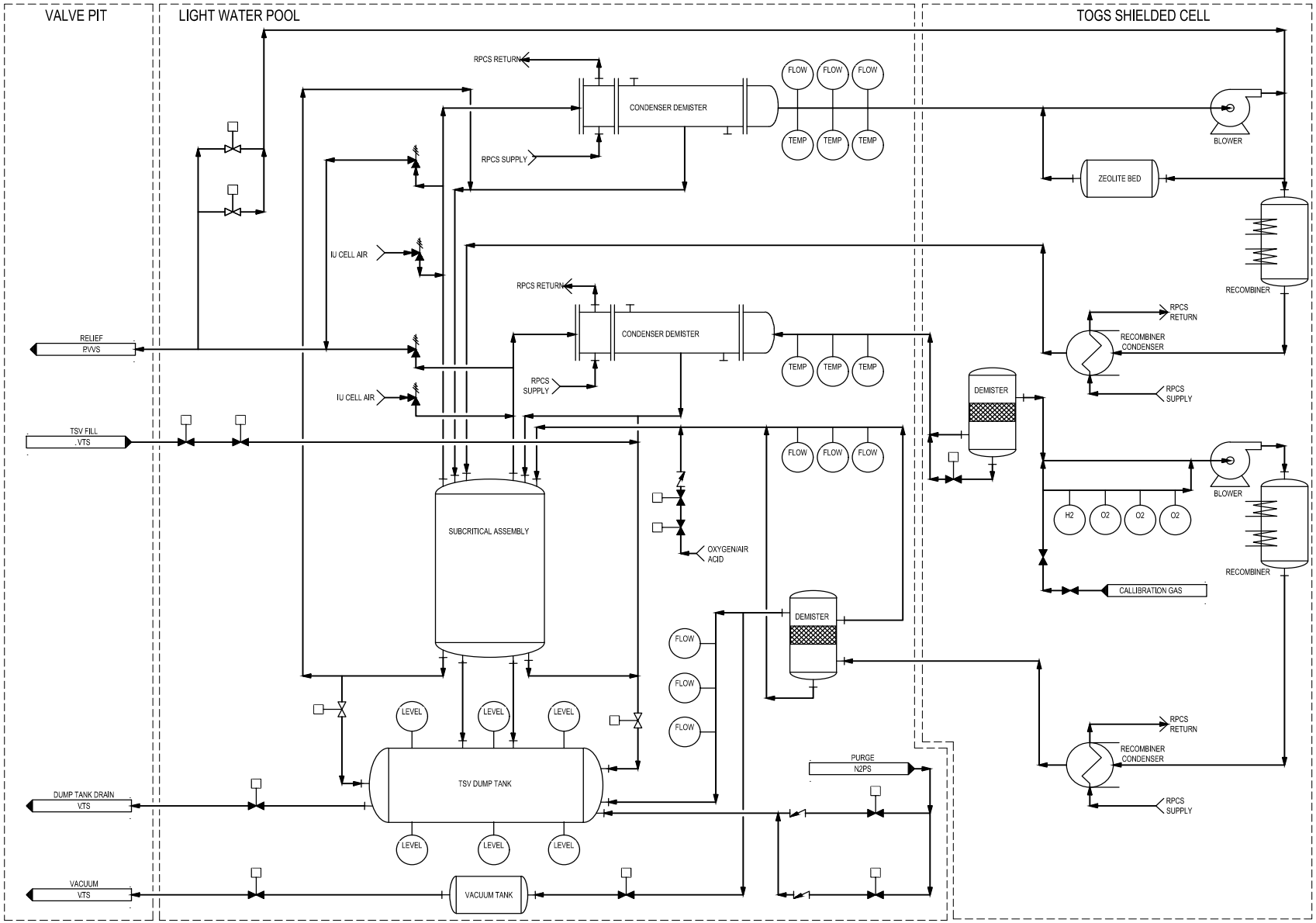

Table 4b.4-1 – Special Nuclear Material Maximum Inventory in the Main Production Facility (Approximate)

Chemical Form[a]	Physical Form	Inventory[b]
Uranium metal	Solid	1030 lb. (470 kg)
Uranium oxide	Powder	310 lb. (140 kg)
Uranyl sulfate	Aqueous	4770 lb. (2170 kg)
Uranyl sulfate	Solidified	16 lb. (8 kg)
Plutonium	Aqueous, solidified	4.08 lb. (1.85 kg)
Highly enriched uranium in fission chambers	Solid	0.22 lb. (0.10 kg)

a) Uranium is low enriched uranium (LEU), unless otherwise noted.
b) Inventory mass does not include the water mass for aqueous solutions.

Figure 6a2.2-1 – Primary Confinement Boundary

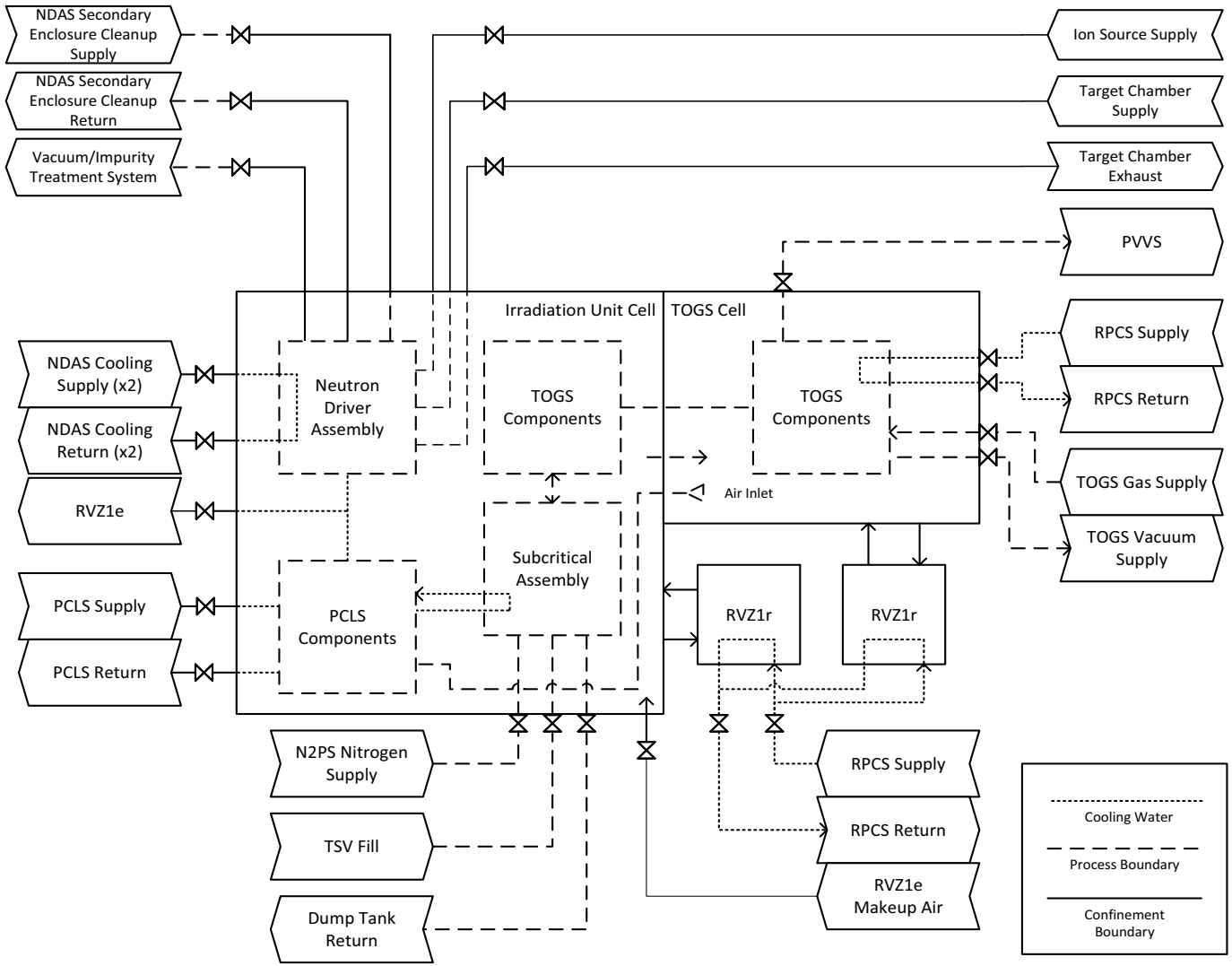

The mass of fissile material in the drums is controlled to less than the single parameter limit on uranium-235 mass. The mass is further restricted by waste acceptance limits on uranium-235 activity. A barrel which meets the waste acceptance limits meets the criticality safety limits. Sample analysis of solution transferred to RLWI is performed and compared to previous sample results and verify uranium concentration is within the established limits. The proper amount of solidification agents is added to a barrel and weighed prior to transfer of uranium-bearing solution to the barrel to ensure waste acceptance limits are satisfied for downstream storage of the waste barrels within the material staging building.

Interaction between barrels is controlled by limiting the number of barrels present within the immobilization skid.

Precipitation of uranium requires application of the DCP to prevent criticality accidents. Reagent vessels have unique nozzle connections to prevent inadvertent transfer of reagents, and the volume of the vessels is limited. Process lines are sloped, and equipment are equipped with drains to prevent holdup of fissile material. Additionally, solutions transferred to the RLWI system undergo dual, independent sample analysis to verify the pH of the solution is within limits prior to transferring the solution.

6b.3.2.10 Laboratories

The LABS receive, store, and process liquid and solid analytical samples of oxides, metals, and irradiated and unirradiated target solution.

The laboratory is controlled by an overall limit on mass which is significantly below the subcritical limit on mass for uranium-235 and is subcritical under all conditions.

Criticality Safety Basis

The NCSE for the LABS shows that the entire process will remain subcritical under normal and credible abnormal conditions.

The LABS system is administratively controlled to ensure the combined total uranium mass is significantly below the subcritical mass for uranium-235.

6b.3.2.11 Material Staging Building

The material staging building exists to process, characterize, and store byproduct material and SNM, used in the production of medical isotopes. The material staging building provides a location for the packaged radioactive material to decay until it can be transported to an off-site final disposal location. The material staging building will mostly store standard-sized 55-gallon drums containing cured, solidified waste. Other forms of radioactive waste are stored in the material staging building (e.g., used neutron drivers, glassware). Transient processing of column waste drums, including encapsulation and loading into appropriate shipping containers, also occurs in the material staging building. Column waste drums are not stored in the material staging building.

Criticality Safety Basis

The NCSE for the material staging building shows that the entire process will remain subcritical under normal and credible abnormal conditions.

The material stored in the material staging building is comprised entirely of exempt fissile material. ~~To protect against damage to the material, the lift height of a barrel is limited so that if a barrel drop were to occur the barrel would remain undamaged.~~ Solidified liquid waste meets the requirements for exemption from classification as fissile material under 10 CFR 71.15(c). As-generated solid waste meets the requirements for exemption from classification as fissile material under 10 CFR 71.15(a). Because the SNM stored in the material staging building is exempt fissile material ~~and~~, there is no credible means ~~of changing the state of the material, there is no need for additional controls.~~ by which a criticality would occur.

Transient processing of column waste drums requires application of the DCP. The total non-exempt fissile material in a fissile material area is limited to 600 grams. Additionally, packages with non-exempt fissile material are limited to a maximum fissile material content of 50 grams.

6b.3.2.12 Iodine Extraction and Purification System

The IXP is designed to separate iodine from irradiated uranyl sulfate target solution [ ]PROP/ECI. The iodine is then purified into a sodium hydroxide solution. Xenon is collected from [ ]PROP/ECI. The IXP is in a hot cell. One operating line of the IXP is part of the RPF.

Criticality Safety Basis

The NCSE for the IXP shows that the entire process will remain subcritical under normal and credible abnormal conditions.

The piping and equipment in the IXP containing target solution is favorable geometry within the single parameter limits. The IXP cell is equipped with a drain to RDS that is adequately sized to prevent buildup of solution in the cell.

The inadvertent transfer of target solution to the IXP eluate tank requires application of the DCP to prevent criticality accidents. A three-way valve is designed to prevent transfer of target solution to the eluate tank during extraction processing. Additionally, an isolation valve located between the three-way valve and eluate tank is administratively closed during processing of target solution.

Prevention of target solution backflow into the FCRS requires application of the DCP to prevent criticality accidents. A check valve is installed to prevent the flow of solution upstream to FCRS. Additionally, an isolation valve located between the check valve and the FCRS is administratively closed during processing of target solution.

Precipitation due to inadvertent addition of caustic reagents requires application of the DCP to prevent criticality accidents. The IXP is equipped with unique nozzle hookups for each reagent to prevent improper FCRS hookups. Additionally, the wash sequence of the column is administratively controlled to prevent precipitation.

NuScale Topical Report TR-1015-18653, “Design of the Highly Integrated Protection System Platform” (Nuscale, 2017), and is further described in Subsection 7.4.5.

7.1.5 CONTROL CONSOLE AND DISPLAYS

The operator workstations and main control board are provided as the HSI subset of components for the FCR. These components are included as part of the PICS and are classified as nonsafety-related.

The two operator workstations provide operators with interactive displays to perform daily activities for the SHINE facility. The displays at the operator workstation are capable of being changed to the appropriate screen applicable to the activities that the operator is performing during day-to-day operations of the SHINE facility. Additional equipment, located between the two operator workstations and usable by either operator, is dedicated to controlling the eight NDAS units located in the IU cells.

The main control board, located in front of the two operator workstations, includes both digital displays and limited manual interfaces.

The main control board provides the operator with multiple digital displays, configured to continuously display variables important to safety-related system status for individual IUs and the balance of the SHINE facility. The displays on the main control board are used to support manual actuation of safety-related systems and to verify correct operation of the safety-related systems in the event of an actuation.

The main control board provides operator interfaces for:

- manual actuation of the TRPS and ESFAS protective functions,
- the enable nonsafety function, which allows PICS control of the actuation and priority logic (APL) output state (i.e., deenergized or energized), and
- the facility operating permissive key, which is used to place the main production facility into a secure state.

The supervisor workstation is located at the rear of the facility control room and acts as an extension of the operator workstations. The supervisor workstation is equipped with equipment display screens that allow the supervisor to monitor system status~~, but not~~ and control facility components.

Facility controls are designed and located using consideration of human factors engineering principles. SHINE uses human factors engineering principles to facilitate the safe, efficient, and reliable performance of operations, maintenance, tests, inspections, and surveillance tasks, and to ensure the implementation of operator interfaces, indicators, and controls are standardized across vendors.

These systems are further described in Section 7.6.

Figure 7.1-1 – Instrumentation and Control System Architecture

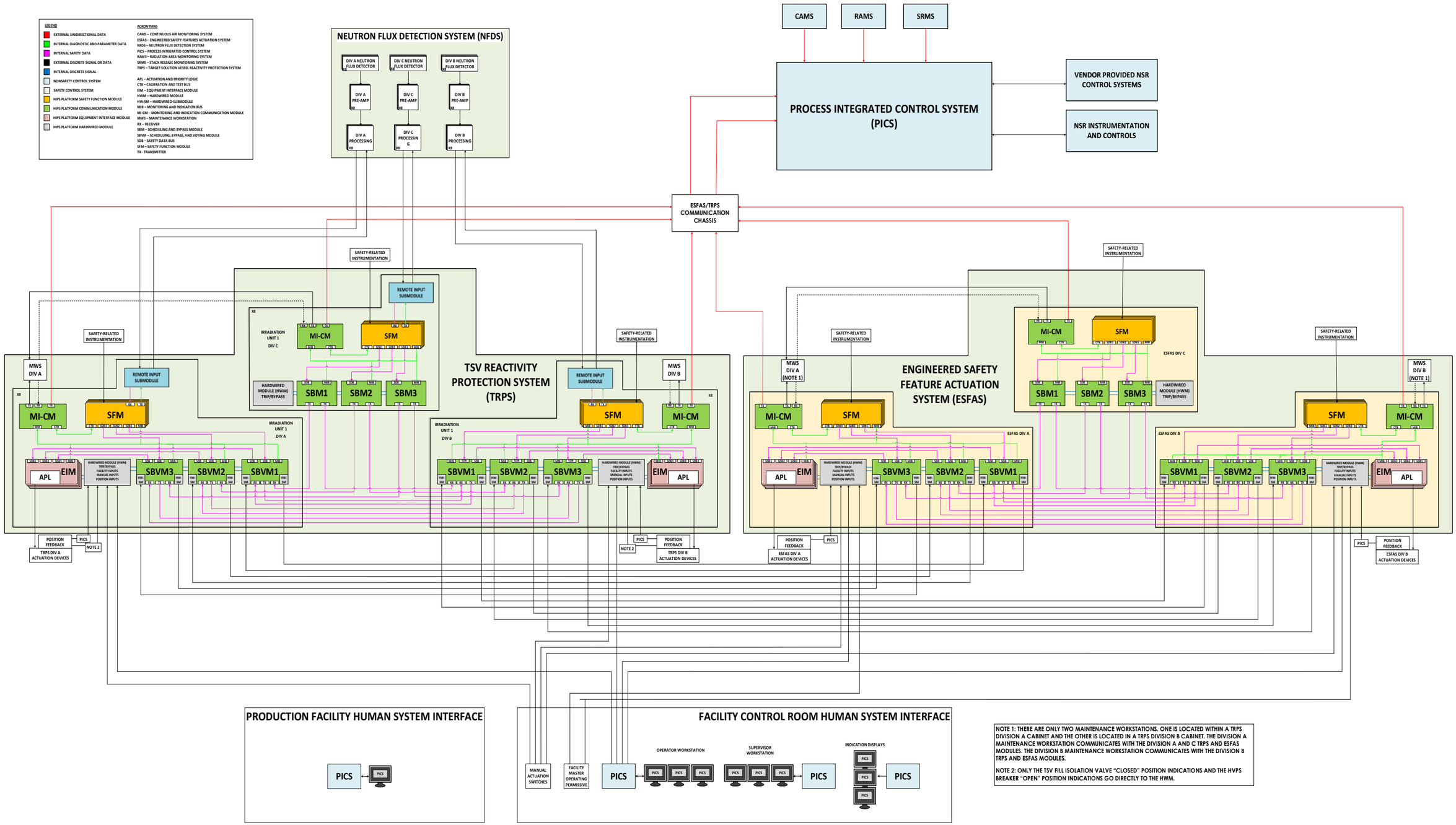

Figure 7.1-2 – Target Solution Vessel Reactivity Protection System Architecture

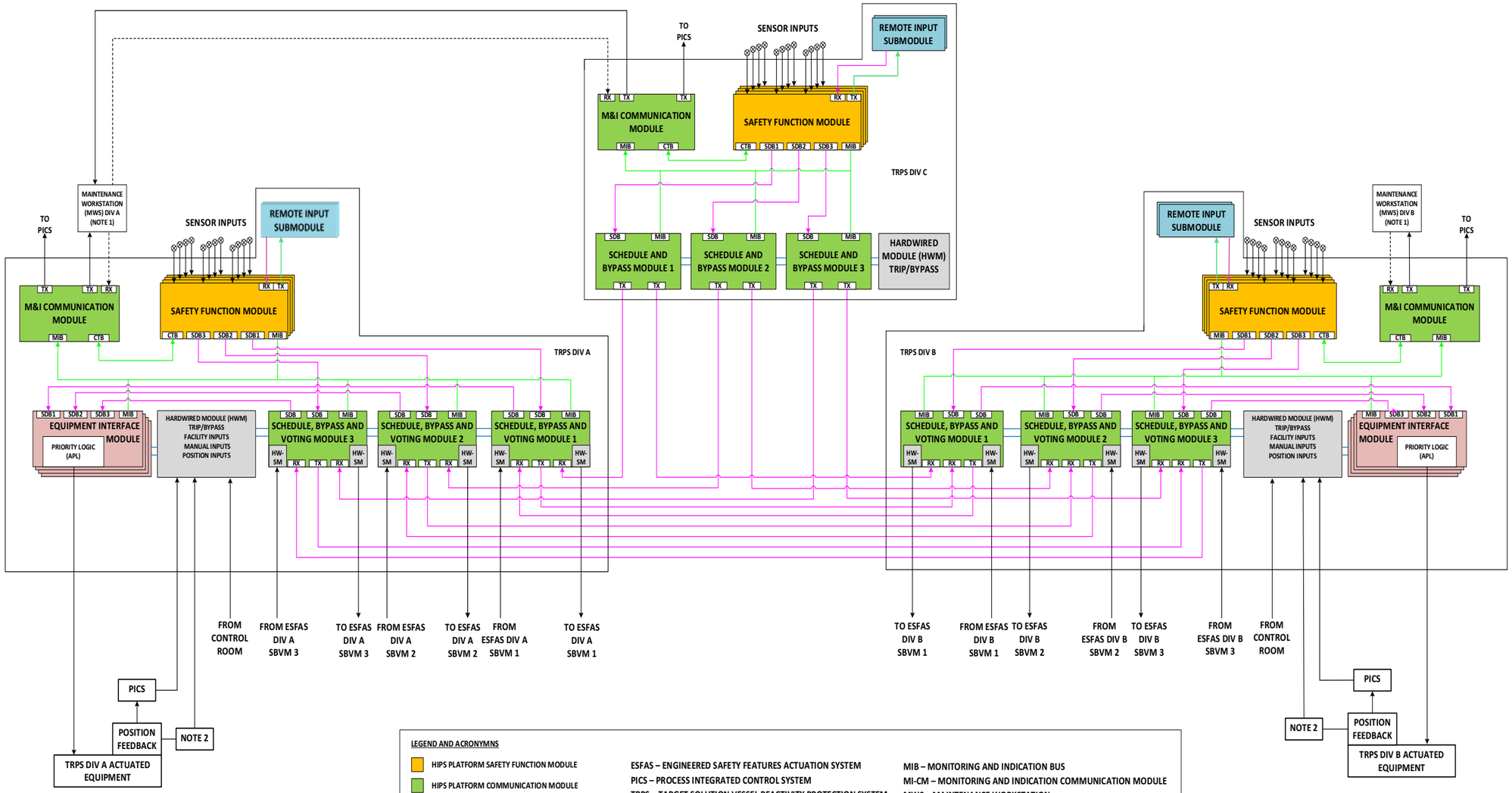

LEGEND AND ACRONYMNS

- HIPS PLATFORM SAFETY FUNCTION MODULE
- HIPS PLATFORM COMMUNICATION MODULE
- HIPS PLATFORM EQUIPMENT INTERFACE MODULE
- HIPS PLATFORM HARDWIRED MODULE
- INTERNAL DIAGNOSTIC AND PARAMETER DATA
- INTERNAL SAFETY DATA
- EXTERNAL DISCRETE SIGNAL OR DATA

ESFAS – ENGINEERED SAFETY FEATURES ACTUATION SYSTEM
PICS – PROCESS INTEGRATED CONTROL SYSTEM
TRPS – TARGET SOLUTION VESSEL REACTIVITY PROTECTION SYSTEM

APL – ACTUATION AND PRIORITY LOGIC
CTB – CALIBRATION AND TEST BUS
EIM – EQUIPMENT INTERFACE MODULE
HWM – HARDWIRED MODULE
HW-SM – HARDWIRED-SUBMODULE

MIB – MONITORING AND INDICATION BUS
MI-CM – MONITORING AND INDICATION COMMUNICATION MODULE
MWS – MAINTENANCE WORKSTATION
RX – RECEIVER
SBM – SCHEDULING AND BYPASS MODULE
SBVM – SCHEDULING, BYPASS, AND VOTING MODULE
SDB – SAFETY DATA BUS
SFM – SAFETY FUNCTION MODULE
TX - TRANSMITTER

NOTE 1: THERE ARE ONLY TWO MAINTENANCE WORKSTATIONS. ONE IS LOCATED WITHIN A TRPS DIVISION A CABINET AND THE OTHER IS LOCATED IN A TRPS DIVISION B CABINET. THE DIVISION A MAINTENANCE WORKSTATION COMMUNICATES WITH THE DIVISION A AND C TRPS AND ESFAS MODULES. THE DIVISION B MAINTENANCE WORKSTATION COMMUNICATES WITH THE DIVISION B TRPS AND ESFAS MODULES.

NOTE 2: ONLY THE TSV FILL ISOLATION VALVE "CLOSED" POSITION INDICATIONS AND THE HVPS BREAKER "OPEN" POSITION INDICATIONS GO DIRECTLY TO THE HWM.

Figure 7.1-3 – Engineered Safety Feature Actuation System Architecture

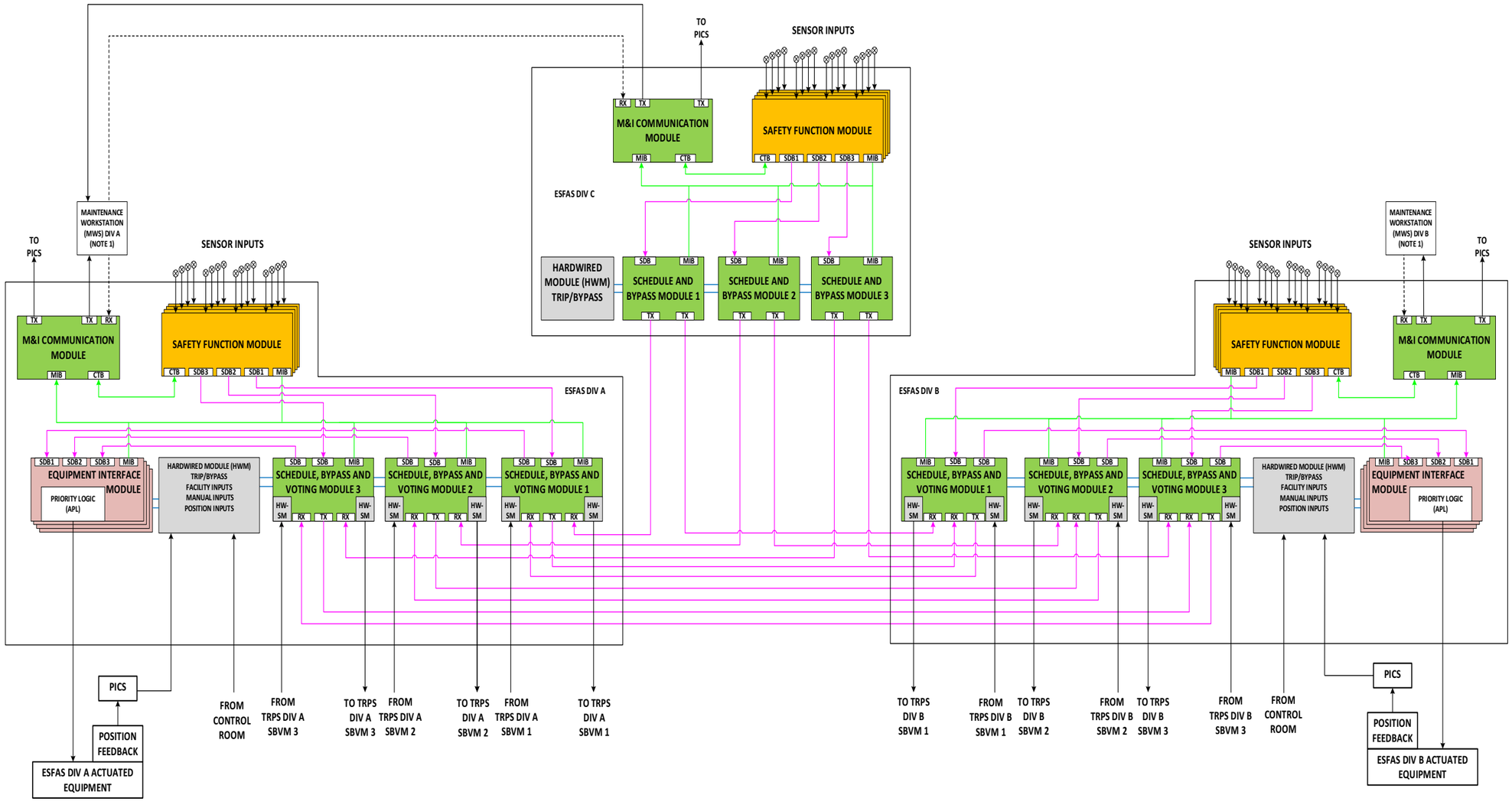

LEGEND AND ACRONYMNS

- HIPS PLATFORM SAFETY FUNCTION MODULE
- HIPS PLATFORM COMMUNICATION MODULE
- HIPS PLATFORM EQUIPMENT INTERFACE MODULE
- HIPS PLATFORM HARDWIRED MODULE
- INTERNAL DIAGNOSTIC AND PARAMETER DATA
- INTERNAL SAFETY DATA
- EXTERNAL DISCRETE SIGNAL OR DATA

ESFAS – ENGINEERED SAFETY FEATURES ACTUATION SYSTEM
PICS – PROCESS INTEGRATED CONTROL SYSTEM
TRPS – TARGET SOLUTION VESSEL REACTIVITY PROTECTION SYSTEM

APL – ACTUATION AND PRIORITY LOGIC
CTB – CALIBRATION AND TEST BUS
EIM – EQUIPMENT INTERFACE MODULE
HWM – HARDWIRED MODULE
HW-SM – HARDWIRED-SUBMODULE

MIB – MONITORING AND INDICATION BUS
MI-CM – MONITORING AND INDICATION COMMUNICATION MODULE
MWS – MAINTENANCE WORKSTATION
RX – RECEIVER
SBM – SCHEDULING AND BYPASS MODULE
SBVM – SCHEDULING, BYPASS, AND VOTING MODULE
SDB – SAFETY DATA BUS
SFM – SAFETY FUNCTION MODULE
TX - TRANSMITTER

NOTE 1: THERE ARE ONLY TWO MAINTENANCE WORKSTATIONS. ONE IS LOCATED WITHIN A TRPS DIVISION A CABINET AND THE OTHER IS LOCATED IN A TRPS DIVISION B CABINET. THE DIVISION A MAINTENANCE WORKSTATION COMMUNICATES WITH THE DIVISION A AND C TRPS AND ESFAS MODULES. THE DIVISION B MAINTENANCE WORKSTATION COMMUNICATES WITH THE DIVISION B TRPS AND ESFAS MODULES.

7.3 PROCESS INTEGRATED CONTROL SYSTEM

The SHINE facility is provided with nonsafety-related control systems necessary to perform normal operational activities within the facility. The process integrated control system (PICS) is a nonsafety-related digital control system that performs various functions throughout the SHINE facility. The PICS is the primary interface for operators to perform tasks in both the irradiation facility (IF) and the radioisotope production facility (RPF). PICS functions include signal conditioning, system controls, interlocks, and monitoring of the process variables and system status.

Vendor-provided nonsafety-related control systems, which interface and communicate with the PICS, are also present within the SHINE facility and are used to monitor and control specific facility systems.

The main control board and operator workstations in the facility control room are also part of the PICS and are described in Section 7.6.

7.3.1 SYSTEM DESCRIPTION

The PICS is a collection of instrumentation and control equipment located throughout the facility to support monitoring, indication, and control of various systems. A portion of the PICS supports the main control board and operator workstations in the facility control room by receiving operator commands and collecting and transmitting facility information to the operators, as described in Section 7.6. The PICS system network routes signals to the main distribution switch located in the server room. Information from the facility control room, remote input/output cabinets, remote human machine interface panels, programmable logic controllers, vendor-provided control systems, and virtual machines communicates through the main distribution switch with a combination of copper cabling and fiber optic cabling. An architecture of the PICS is provided in Figure 7.3-1.

The following vendor-provided nonsafety-related control systems are also provided for the SHINE facility:

- The building automation system is a digital control system capable of integrating multiple building functions, including equipment supervision and control, alarm management, energy management, and trend data collection. It provides control for the facility heating water system (FHWS), the facility chilled water system (FCHS), the process chilled water system (PCHS), the radioisotope process facility cooling system (RPCS), facility ventilation zone 4 (FVZ4) air handling, and radiological ventilation zone 1, 2, and 3 (RVZ1/2/3) air handling. The building automation system ~~receives commands from the PICS to start and stop select control sequences and~~ provides information to the PICS for monitoring.
- The supercell contains a local control system and human system interface equipment for controlling hot cell functions including interior lighting, interior temperature and pressure, and operation of the doors, ports, and waste export system. The supercell control system provides information to PICS for monitoring only.
- The radioactive liquid waste immobilization (RLWI) system contains a local control system and human system interface equipment for controlling RLWI equipment functions including operation of equipment used to handle solidified waste. The RLWI control system provides information to PICS for monitoring only.

active sequences. Components that are capable of being actuated by TRPS or ESFAS are controlled by PICS as described in Subsection 7.3.1.3.11.

When initiated by the operator, the PICS starts or stops the VTS by enabling or disabling the vacuum system pressure control loop.

The PICS automatically starts and stops the second of two VTS vacuum pumps to maintain vacuum system pressure within an allowable range.

The supercell control system is used by the operator to manually control hot cell (non-process) functions.

Interlocks and Permissives

The PICS provides interlocks and permissives to:

- Close or prevent opening of individual VTS lift tank or target solution sample line vacuum valves when the corresponding VTS lift tank or target solution sample line high level switch signal is active.
- Close or prevent opening VTS vacuum buffer tank vacuum valves~~,~~ and stop or prevent from starting the VTS vacuum pumps~~, and open the VTS vacuum buffer tank drain valve~~ on high level in the VTS vacuum buffer tank.
- Close the VTS vacuum supply valves after being energized for a predetermined amount of time.
- Prevent the vacuum transfer sequence from starting if level in the destination tank selected is above an allowable limit.
- Prevent VTS vacuum pumps from starting if any buffer tank vacuum valve is open.
- Prevent VTS vacuum valves from energizing if PVVS flow is below an allowable limit.

Indication to the operator is provided on the PICS operator workstation displays when an interlock or permissive is bypassed.

7.3.1.2.6 Target Solution Staging System

The TSSS is used in conjunction with the VTS (Subsection 7.3.1.2.5), and consists of hold tanks and storage tanks located in subgrade vaults. The TSSS is described in more detail in Subsection 4b.4.1.1.

Monitoring and Alarms

The PICS monitors and provides alarms for two diverse methods of level indication for the individual TSSS tanks, and temperature indication for the individual TSSS tanks. The PICS additionally provides alarms when tank level or transfer time is outside of expected parameters during a solution transfer sequence.

Control Functions

When manually initiated by the operator, the PICS executes a programmed sequence to transfer solution from one manually selected TSSS tank to another manually selected tank using the VTS. The PICS opens and closes the appropriate system isolation valves based on feedback

The PICS directly monitors and provides alarms for battery ~~room and UPS equipment room~~ temperatures, battery room hydrogen concentration, battery charge level, battery charger current, inverter bypass status, inverter current, and various other system parameters for both divisions of the UPSS. The PICS also provides alarms for fault conditions of UPSS components (e.g., battery fault, battery charger fault, UPS fault, DC bus ground) and unexpected system alignments (e.g., battery charger breakers open, bypass transformer breakers open, inverter bypass breaker closed, load breakers open).

Control Functions

None

Interlocks and Permissives

None

7.3.1.4.3 Standby Generator System

The SGS provides nonsafety-related backup power for the SHINE facility, as described in Subsection 8a2.2.6. The SGS generator includes a vendor-provided nonsafety-related controller.

Monitoring and Alarms

The PICS provides monitoring and alarms for SGS voltage, current, and power. The internal vendor-provided SGS generator controller additionally monitors for generator status and faults, including oil pressure, water temperature, engine temperature, fuel pressure, coolant level, overcrank or overspeed conditions, and other generator parameters. The SGS controller provides a subset of these monitored parameters to the PICS for display and alarming.

Control Functions

The PICS provides the operator the ability to manually start or stop the generator by providing a signal to the SGS automatic transfer switch(es), and to manually transfer loads between the generator and the off-site utility by opening and closing breakers.

The SGS generator controller automatically starts the generator in response to a loss of off-site power event. ~~PICS automatically sequences the loads onto the generator.~~

Interlocks and Permissives

The generator automatic transfer switch design prevents paralleling the generator with either service entrance.

7.3.1.4.4 Nitrogen Purge System

The nitrogen purge system (N2PS) provides a backup supply of sweep gas to each IU and to all tanks normally ventilated by the PVVS during a loss of normal power or loss of normal sweep gas flow. The off-gas resulting from the nitrogen purge is treated by passive PVVS equipment prior to being discharged to the alternate vent path in the PVVS and the stack. The N2PS is described in Subsections 6b.2.3 and 9b.6.2.

PICS Criterion 3 – The PICS software development lifecycle process requirements shall be described and documented in appropriate plans which shall address verification and validation (V&V) and configuration control activities.

The PICS is developed in accordance with the PICS validation master plan, which addresses V&V and configuration control activities, as described in Subsection 7.3.3.4. The development of other vendor-provided nonsafety-related control systems is also described in Subsection 7.3.3.4.

PICS Criterion 4 – The configuration control process shall assure that the required PICS hardware and software are installed in the appropriate system configuration and ensure that the correct version of the software/firmware is installed in the correct hardware components.

The PICS validation master plan assures that the required PICS hardware and software are installed in the appropriate system configuration and ensures that the correct version of the hardware/firmware is installed in the correct hardware components as described in Subsection 7.3.3.4. Configuration control of other vendor-provided nonsafety-related control systems is also described in Subsection 7.3.3.4.

7.3.2.2.3 Fail Safe

PICS Criterion 5 – The PICS shall assume a defined safe state with loss of electrical power to the PICS.

Components controlled by the PICS assume a defined safe state on loss of electrical power (Subsection 7.3.3.6).

7.3.2.2.4 Effects of Control System Operation/Failures

PICS Criterion 6 – The PICS shall be designed so that it cannot fail or operate in a mode that could prevent the TRPS or ESFAS from performing its designated functions.

Nonsafety-related PICS inputs into the TRPS and ESFAS are designed and controlled so they do not prevent the TRPS or ESFAS from performing its safety functions as described in Subsections 7.4.3.4 and 7.5.3.3. Other vendor-provided nonsafety-related control systems do not provide input to the TRPS or ESFAS.

The failure modes and effects analysis for the TRPS and ESFAS (Subsection 7.4.5.2.2) evaluates the interfaces with PICS for any direct impacts and ensures that no failures within the PICS could directly impact the ability of the TRPS or ESFAS to perform its functions.

To assess whether PICS could indirectly affect the ability of the TRPS or ESFAS to perform its functions or any other control credited in the SHINE Safety Analysis (Section 13a2) from being performed, a review of monitored variables within the TRPS and the ESFAS and credited controls is performed. The assessment includes an evaluation of whether any condition could exist in the facility, caused by the failure of one or more PICS-controlled components, that could: (1) cause an unsafe condition to exist but the system not to see it, or (2) could interfere with a safety function being completed. The assessment identifies the necessary design controls to ensure that PICS could not indirectly affect the ability of the TRPS or ESFAS from performing its functions or a credited control in the SHINE Safety Analysis from being performed.

(Subsection 13a2.1.3, Scenarios 1 and 2), mishandling or malfunction of target solution events (Subsection 13a2.1.4, Scenario 4), external events (Subsection 13a2.1.6, Scenarios 2 and 5), large undamped power oscillations (Subsection 13a2.1.8), detonation and deflagration in the primary system boundary (Subsection 13a2.1.9, Scenarios 1 and 2), system interaction events (Subsection 13a2.1.11, Scenarios 1 and 2), and facility specific – neutron driver assembly system (NDAS) events (Subsection 13a2.1.12, Scenario 3).

An IU Cell Safety Actuation causes a transition of the TRPS to Mode 3 operation, isolation of the primary system boundary, and isolation of the primary confinement boundary via transition of each of the following components to their deenergized state.

Mode 3 Transition Components
- TSV dump valves
- NDAS high voltage power supply (HVPS) breakers

Primary System Boundary Components
- TSV fill isolation valves
- TSV dump tank drain isolation valve
- TOGS gas supply isolation valves
- TOGS vacuum tank isolation valves
- Vacuum transfer system (VTS) lower lift tank target solution valves*

Primary Confinement Boundary Components
- PCLS supply isolation valve
- PCLS return isolation valves
- RVZ1e subsystem IU cell isolation valves
- Radiological ventilation zone 1 recirculation (RVZ1r) subsystem radioisotope process facility cooling system (RPCS) supply isolation valve
- RVZ1r RPCS return isolation valve
- TOGS RPCS supply isolation valves
- TOGS RPCS return isolation valve
- TPS target chamber supply isolation valves
- TPS deuterium supply isolation valves
- TPS target chamber exhaust isolation valves
- TPS neutron driver evacuation isolation valves
- NDAS target/ion source cooling supply isolation valve
- NDAS target/ion source cooling return isolation valve
- NDAS vacuum pump cooling supply isolation valve
- NDAS vacuum pump cooling return isolation valve

* IU Cells 1 and 8 only have a single valve to the extraction lower lift tanks. The VTS lower lift tank target solution valves are redundant to the TSV dump tank drain isolation valve for an IU Cell Safety Actuation.

The TRPS initiates an IU Cell Safety Actuation based on the following variables:

- High source range neutron flux
- High time-averaged neutron flux*
- High wide range neutron flux
- High RVZ1e IU cell radiation

- High TOGS condenser demister outlet temperature (Train B)
- ESFAS loss of external power

7.4.3.1.3 IU Cell TPS Actuation

An IU Cell TPS Actuation is initiated when monitored variables indicate a release of tritium in a TPS glovebox, within the IU cell, or within the TPS IU cell supply/exhaust lines. An IU Cell TPS Actuation results in isolating the TPS lines into and out of the IU cell, isolating the RVZ1 exhaust out of the IU cell, and deenergizing the neutron driver.

An IU Cell TPS Actuation consists of an automatically or manually initiated transition of each of the following components to their deenergized state and initiating a Driver Dropout (see Subsection 7.4.3.1.4):

- TPS target chamber supply isolation valves
- TPS deuterium supply isolation valves
- TPS target chamber exhaust isolation valves
- TPS neutron driver evacuation isolation valves
- RVZ1e IU cell isolation valves

The TRPS initiates an IU Cell TPS Actuation based on the following variables:

- ESFAS IU Cell TPS Actuation
- ESFAS TPS Process Vent Actuation
- Facility master operating permissive

7.4.3.1.4 Driver Dropout

A Driver Dropout responds to monitored variables that indicate a loss of neutron driver output or a loss of cooling to allow the SCAS to recover from NDAS or PCLS transients. A Driver Dropout functions differently depending on whether it was initiated based on loss of neutron driver output or loss of cooling.

A Driver Dropout is relied upon as a safety-related control for insertion of excess reactivity events (Subsection 13a2.1.2, Scenario 4), and reduction in cooling events (Subsection 13a2.1.3, Scenarios 1 and 2). The TRPS initiates a Driver Dropout based on:

- Low power range neutron flux
- Low PCLS flow
- High PCLS temperature
- IU Cell TPS Actuation
- Facility master operating permissive

The TRPS initiates a loss of neutron driver Driver Dropout on low power range neutron flux by opening the NDAS HVPS breakers with a timed delay. Driver Dropout on low power range neutron flux is bypassed until the power range neutron flux has reached the power range driver dropout permissive. After the bypass of Driver Dropout on low power range neutron flux has been removed, it remains removed until a mode transition or both HVPS breakers are open. The TRPS implements a timed delay of [ ]$^{PROP/ECI}$ from the time the low power range neutron flux signal is initiated, indicating that the neutron flux has exceeded its lower limits, to

when the TRPS output to the HVPS breakers is deenergized. If fewer than two-out-of-three low power range neutron flux actuation signals are present before the timer has expired, then the low power range neutron flux timer resets. This delay allows the neutron driver to be restarted or to restart automatically within analyzed conditions.

The TRPS initiates a loss of cooling Driver Dropout on low PCLS cooling water flow or high PCLS cooling water supply temperature to open the NDAS HVPS breakers without a timed delay. This shuts down the neutron driver to prevent overheating of the target solution, while allowing the target solution to remain within the TSV. The breakers are then interlocked open until the PCLS flow and temperature are in the allowable range. If PCLS flow and temperature are not in the allowable range within 180 seconds, an IU Cell Safety Actuation is initiated, as described in Subsection 7.4.3.1.1.

7.4.3.2 Mode Transition

The design of the TRPS includes use of permissives and interlocks to control transition between IU operating modes to ensure safe operation of the main production facility. IU operating modes are described in Subsection 7.3.1.1.

Each mode transition in the TRPS is initiated manually through the PICS; however, transition to Mode 3 can occur automatically by an IU Cell Safety Actuation or by use of the control key to deactivate the facility master operating permissive. Before an operator is able to manually transition to a different mode, the transition criteria conditions must be met. Figure 7.4-1 shows a state diagram of the mode transitions.

Mode 0 to Mode 1 Transition Criteria

The TRPS permissives prevent transitioning from Mode 0 to Mode 1 until ~~the~~both TSV dump valves and at least one TSV fill isolation valve~~s~~ have been confirmed to be closed and TOGS mainstream flow is at or above the low flow limit. Normal control of actuation component positions when going from Mode 0 to Mode 1 is manual and independent from TRPS mode transition.

Mode 0 to Mode 3 Transition Criteria

Transition from Mode 0 to Mode 3 is initiated automatically by TRPS or manually by an operator via manual actuation or the facility master operating permissive (Subsection 7.4.4.2). Initiation of this transition generates an IU Cell Safety Actuation.

Mode 1 to Mode 2 Transition Criteria

The TRPS permissives prevent transitioning from Mode 1 to Mode 2 until ~~the~~at least one TSV fill isolation valve~~s~~ indicates fully closed. Normal control of actuation component positions when going from Mode 1 to Mode 2 is manual and independent from TRPS mode transition.

Mode 1 to Mode 3 Transition Criteria

Transition from Mode 1 to Mode 3 is initiated automatically by TRPS or manually by an operator via manual actuation or the facility master operating permissive (Subsection 7.4.4.2). Initiation of this transition generates IU Cell Safety Actuation.

7.4.4.1.13 High TOGS Condenser Demister Outlet Temperature

The high TOGS condenser demister outlet temperature signal protects against adverse effects on TOGS instrumentation and zeolite beds, causing them to fail to perform their safety functions (Subsection 13a2.1.9.2, Scenario 1). The signal is generated by TRPS when a TOGS condenser demister outlet temperature input exceeds the high level setpoint. TOGS condenser demister outlet temperature is measured independently for both TOGS Train A and TOGS Train B. The TOGS condenser demister outlet temperature signal is measured with a temperature interface on three different channels, one for each TRPS division. When two-out-of-three or more TOGS condenser demister outlet temperature inputs exceed the allowable limit, an IU Cell Safety Actuation and an IU Cell Nitrogen Purge are initiated.

7.4.4.1.14 ESFAS Loss of External Power

The ESFAS loss of external power signal is an anticipatory protection against the impending loss of TOGS blowers and recombiners after the runtime of that equipment on the UPSS has been exceeded (Subsection 13a2.1.9.2, Scenario 1). The signal is generated by ESFAS and provided to each of the eight TRPS subsystems when ESFAS senses a loss of external (i.e., normal) power being provided to the UPSS as described in Subsection 7.5.4.1.19. TRPS does not receive the loss of external power signal from ESFAS until three minutes after the external power loss. The ESFAS loss of external power signal is measured with a discrete input signal on two different channels, one for each Division A and Division B of TRPS. When an ESFAS loss of external power signal indicates power has been lost, the division receiving the discrete signal initiates an IU Cell Nitrogen Purge.

7.4.4.1.15 High RVZ1e IU Cell Exhaust Radiation

The high RVZ1e IU cell exhaust radiation signal protects against a breach in the primary system boundary (Subsection 13a2.1.4.2, Scenario 4; and Subsection 13a2.1.9.2, Scenario 2). The high RVZ1e IU cell exhaust radiation is measured on the exhaust of the PCLS expansion tank located in each IU cell. The signal is generated by TRPS when an RVZ1e IU cell exhaust radiation input exceeds the high level setpoint. The RVZ1e IU cell radiation is measured with an analog interface on three different channels, one for each division of TRPS. When two-out-of-three or more RVZ1e IU cell exhaust radiation channels exceed the allowable limit, an IU Cell Safety Actuation is initiated.

7.4.4.1.16 TSV Fill Isolation Valve Position Indication Not Closed

A TSV fill isolation valve position indication not closed signal protects against the inadvertent addition of target solution to the TSV (Subsection 13a2.1.2.2, Scenario 6) via an inappropriately opened TSV fill isolation valve. The TSV fill isolation valve position indication is received by the TRPS as a discrete input from redundant position indicating limit switches on two different channels for each valve. When one-out-of-two or more TSV fill isolation valve position indication signals indicate the associated valve is not closed for ~~either~~both of the TSV fill isolation valves, an IU Cell Safety Actuation is initiated. IU Cell Safety Actuation on TSV fill isolation valve position indication is only applicable when the IU cell is undergoing irradiation (Mode 2).

associated SBVMs within the division. When associated permissives are satisfied and the manual operator action for mode transition occurs, the TRPS progresses to the next mode and the SBVMs will: (1) automatically bypass the final trip determinations for safety actuations that are not required for that particular mode of operation, and (2) will automatically remove any bypasses of the final trip determinations for safety actuations that are required for that particular mode of operation. See the TRPS mode state diagram in the TRPS logic diagrams (Figure 7.4-1) for the transitional sequence of the TRPS.

If the permissive conditions are not met for transitioning to the next mode and the operator action occurs, the TRPS will not advance to the next mode of operation. Below are the required conditions that must be satisfied before a transition to the following mode in the sequence can be initiated.

- The TRPS shall only transition from Mode 0 to Mode 1 if all TSV dump valve position indications indicate valves are fully closed and ~~all~~ TSV fill isolation valve position indications indicate at least one valve is ~~are~~ fully closed and the TOGS mainstream flow is above the minimum flow rate.
- The TRPS shall only transition from Mode 1 to Mode 2 if ~~the~~ TSV fill isolation valve position indications indicate ~~both~~ at least one valve is ~~are~~ fully closed.
- The TRPS shall only transition from Mode 2 to Mode 3 if all HVPS breaker position indications indicate the breakers are open.
- The TRPS shall only transition from Mode 3 to Mode 4 if an IU Cell Safety Actuation is not present.
- The TRPS shall only transition from Mode 4 to Mode 0 if the TSV dump tank level is below the low-high TSV dump tank level.

In each mode of operation, the TRPS bypasses different actuation channels when the actuation channel is not needed for initiation of an IU Cell Safety Actuation, an IU Cell Nitrogen Purge, an IU Cell TPS Actuation, or Driver Dropout. The lists below identify each variable that is bypassed during the different modes of operation.

Safety actuations based on the following instrumentation channels are bypassed in Mode 0:

- Low power range neutron flux
- Low PCLS temperature
- High PCLS temperature
- Low PCLS flow
- Low TOGS mainstream flow (Train A) (Train B)
- Low TOGS dump tank flow
- High TOGS condenser demister outlet temperature (Train A) (Train B)
- ESFAS loss of external power
- TSV fill isolation valve position indication not closed

Safety actuations based on the following instrumentation channels are bypassed in Mode 1:

- Low power range neutron flux
- TSV fill isolation valve position indication not closed
- Low PCLS flow
- High PCLS temperature

Table 7.4-1 – TRPS Monitored Variables
(Sheet 1 of 2)

Variable	Analytical Limit	Logic	Range	Accuracy	Instrument Response Time
Source range neutron flux	2.52 times the nominal flux at 95 percent volume of the critical fill height	2/3↑	1 to 1.0E+05 cps	2 percent	450 milliseconds
Wide range neutron flux	240 percent	2/3↑	2.5E-~~8~~6 to 250 percent	~~2~~1 percent	450 milliseconds
Power range neutron flux (Low power range limit, driver dropout permissive, and high time-averaged limit)	[ ]PROP/ECI	2/3↓	0 to 125 percent	1 percent	1 second
	40 percent	2/3↑			
	104 percent	2/3↑			
RVZ1e IU cell exhaust radiation	~~15x background radiation~~1.5E-02 µCi/cc	2/3↑	10^{-7} to 10^{-1} µCi/cc	20 percent	15 seconds
TOGS oxygen concentration	10 percent	2/3↓	0 to 25 percent	1 percent	120 seconds
TOGS mainstream flow	[ ]PROP/ECI	2/3↓	[ ]PROP/ECI	3 percent	1.5 seconds
TOGS dump tank flow	[ ]PROP/ECI	2/3↓	[ ]PROP/ECI	3 percent	1.5 seconds
TOGS condenser demister outlet temperature	25°C	2/3↑	0 to 100°C	0.65 percent	10 seconds
Low-high TSV dump tank level	High level	2/3↑	High level/not high level	Discrete input signal	1.5 seconds
High-high TSV dump tank level	High level	2/3↑	High level/not high level	Discrete input signal	1.5 seconds
PCLS flow	[ ]PROP/ECI	2/3↓	[ ]PROP/ECI	1 percent	1 second

Figure 7.4-1 TRPS Logic Diagrams
(Sheet 9 of 14)

Figure 7.4-1 TRPS Logic Diagrams
(Sheet 10 of 14)

Figure 7.4-1 TRPS Logic Diagrams
(Sheet 12 of 14)

7.5.3.5 Seismic, Tornado, Flood

The ESFAS equipment is installed in the seismically qualified portion of the main production facility where it is protected from earthquakes, tornadoes, and floods. The ESFAS equipment is Seismic Category I, tested using biaxial excitation testing and triaxial excitation testing, in accordance with Section 8 of IEEE Standard 344-2013 (IEEE, 2013) (Subsection 7.5.3.12).

7.5.3.6 Human Factors

The ESFAS provides manual actuation capabilities for the safety functions identified in Subsection 7.5.3.1, except for the IU Cell Nitrogen Purge signal which originates in the TRPS, via the following manual push buttons located on the main control board:

- RCA Isolation
- Supercell Isolation (performs Supercell Areas 1 through 10 Isolations and MEPS A/B/C Heating Loop Isolations)
- MEPS A Heating Loop Isolation
- MEPS B Heating Loop Isolation
- MEPS C Heating Loop Isolation
- VTS Actuation
- TPS Isolation (performs TPS Train A/B/C Isolation and TPS Process Vent ~~Isolation~~Actuation)
- Carbon Delay Bed ~~Group~~ 1 Isolation
- Carbon Delay Bed ~~Group~~ 2 Isolation
- Carbon Delay Bed ~~Group~~ 3 Isolation
- Extraction Column A Alignment Actuation
- Extraction Column B Alignment Actuation
- Extraction Column C Alignment Actuation
- IXP Alignment Actuation
- RPF Nitrogen Purge
- Dissolution Tank Isolation

To support the use of manual actuations, the ESFAS includes isolated outputs for each safety-related instrument channel to provide monitoring and indication information to the PICS. To facilitate operator indication of ESFAS actuation function status, manual initiation and reset of protective actions, the ESFAS, at the division level, includes isolated input/output for the following:

- Indication of ESFAS variable values
- Indication of ESFAS parameter values
- Indication of ESFAS logic status
- Indication of ESFAS equipment status
- Indication of ESFAS actuation device status

Operator display criteria and design are addressed in Section 7.6.

7.5.3.7 Loss of External Power

The ESFAS is powered from the UPSS, which provides a reliable source of power to maintain the ESFAS functional during normal operation and during and following a design basis event.

Table 7.5-1 – ESFAS Monitored Variables
(Sheet 1 of 6)

Variable	Analytical Limit	Logic	Range	Accuracy	Response Time
RVZ1 RCA exhaust radiation	~~15x background radiation~~1.9E-05 µCi/cc	2/3↑	10^{-7} to 10^{-1} µCi/cc	20 percent	15 seconds
RVZ2 RCA exhaust radiation	~~15x background radiation~~1.4E-06 µCi/cc	2/3↑	10^{-7} to 10^{-1} µCi/cc	20 percent	15 seconds
RVZ1 supercell area 1 (PVVS) exhaust ventilation radiation	~~15x background radiation~~1.2E-04 µCi/cc	2/3↑	10^{-7} to 10^{-1} µCi/cc	20 percent	15 seconds
RVZ1 supercell area 2 (extraction A) exhaust ventilation radiation	~~15x background radiation~~1.2E-04 µCi/cc	1/2↑	10^{-7} to 10^{-1} µCi/cc	20 percent	15 seconds
RVZ1 supercell area 3 (purification A) exhaust ventilation radiation	~~15x background radiation~~1.2E-04 µCi/cc	1/2↑	10^{-7} to 10^{-1} µCi/cc	20 percent	15 seconds
RVZ1 supercell area 4 (packaging 1) exhaust ventilation radiation	~~15x background radiation~~1.2E-04 µCi/cc	1/2↑	10^{-7} to 10^{-1} µCi/cc	20 percent	15 seconds
RVZ1 supercell area 5 (purification B) exhaust ventilation radiation	~~15x background radiation~~1.2E-04 µCi/cc	1/2↑	10^{-7} to 10^{-1} µCi/cc	20 percent	15 seconds
RVZ1 supercell area 6 (extraction B) exhaust ventilation radiation	~~15x background radiation~~1.2E-04 µCi/cc	1/2↑	10^{-7} to 10^{-1} µCi/cc	20 percent	15 seconds
RVZ1 supercell area 7 (extraction C) exhaust ventilation radiation	~~15x background radiation~~1.2E-04 µCi/cc	1/2↑	10^{-7} to 10^{-1} µCi/cc	20 percent	15 seconds
RVZ1 supercell area 8 (purification C) exhaust ventilation radiation	~~15x background radiation~~1.2E-04 µCi/cc	1/2↑	10^{-7} to 10^{-1} µCi/cc	20 percent	15 seconds

Table 7.5-1 – ESFAS Monitored Variables
(Sheet 2 of 6)

Variable	Analytical Limit	Logic	Range	Accuracy	Response Time
RVZ1 supercell area 9 (packaging 2) exhaust ventilation radiation	~~15x background radiation~~1.2E-04 µCi/cc	1/2↑	10^{-7} to 10^{-1} µCi/cc	20 percent	15 seconds
RVZ1 supercell area 10 (IXP) exhaust ventilation radiation	~~15x background radiation~~1.2E-04 µCi/cc	1/2↑	10^{-7} to 10^{-1} µCi/cc	20 percent	15 seconds
MEPS heating loop radiation extraction area A	2500 mR/hr	1/2↑	0.1 to 10,000 mR/hr	20 percent	~~5~~20 seconds
MEPS heating loop radiation extraction area B	2500 mR/hr	1/2↑	0.1 to 10,000 mR/hr	20 percent	~~5~~20 seconds
MEPS heating loop radiation extraction area C	2500 mR/hr	1/2↑	0.1 to 10,000 mR/hr	20 percent	~~5~~20 seconds
PVVS carbon delay bed ~~group~~ 1 exhaust ~~carbon monoxide~~temperature	~~50 ppm~~121°C	1/2↑	~~1 to 100 ppm~~15 to 300°C	1~~0~~ percent	~~15~~300 seconds
PVVS carbon delay bed ~~group~~ 2 exhaust ~~carbon monoxide~~temperature	~~50 ppm~~121°C	1/2↑	~~1 to 100 ppm~~15 to 300°C	1~~0~~ percent	~~15~~300 seconds
PVVS carbon delay bed ~~group~~ 3 exhaust ~~carbon monoxide~~temperature	~~50 ppm~~121°C	1/2↑	~~1 to 100 ppm~~15 to 300°C	1~~0~~ percent	~~15~~300 seconds
VTS vacuum header liquid detection	Liquid detected	1/2↑	Liquid detected/liquid not detected	Discrete input signal	5.5 seconds
RDS liquid detection	Liquid detected	1/2↑	Liquid detected/liquid not detected	Discrete input signal	5.5 seconds
TPS exhaust to facility stack tritium	1 Ci/m^3	2/3↑	1 to 2,000,000 µCi/m^3	10 percent	5 seconds

Figure 7.5-1 – ESFAS Logic Diagrams
(Sheet 11 of 25)

Figure 7.5-1 – ESFAS Logic Diagrams
(Sheet 12 of 25)

Figure 7.5-1 – ESFAS Logic Diagrams
(Sheet 13 of 25)

Figure 7.5-1 – ESFAS Logic Diagrams
(Sheet 14 of 25)

Figure 7.5-1 – ESFAS Logic Diagrams
(Sheet 15 of 25)

Figure 7.5-1 – ESFAS Logic Diagrams
(Sheet 16 of 25)

Figure 7.5-1 – ESFAS Logic Diagrams
(Sheet 17 of 25)

Figure 7.5-1 – ESFAS Logic Diagrams
(Sheet 18 of 25)

Figure 7.5-1 – ESFAS Logic Diagrams
(Sheet 19 of 25)

Figure 7.5-1 – ESFAS Logic Diagrams
(Sheet 20 of 25)

The NFDS provides continuous indication of the neutron flux from zero counts per second (cps) to at least 250 percent power with ~~two~~one decade~~s~~ of overlap (Subsection 7.8.3.1).

NFDS Criterion 3 – The NFDS power range channels shall provide reliable TSV power level while the source range channel provides count rate information from detectors that directly monitor the neutron flux.

The NFDS power range provides a signal proportional to TSV power level from 0 to 125 percent of the licensed power limit. The source range provides a current signal proportional to count rate for all expected startup count rates (Subsection 7.8.3.1).

NFDS Criterion 4 – The NFDS log power range channel (i.e., wide range channel) and a linear flux monitoring channel (i.e., power range channel) shall accurately sense neutrons during irradiation, even in the presence of intense high gamma radiation.

Each NFDS division includes an ionization chamber detector and a ~~Boron Trifluoride (BF_3)~~fission chamber detector pair. These detector types are primarily sensitive to thermal neutrons.

NFDS Criterion 5 – The NFDS shall provide redundant TSV power level indication through the licensed maximum power range.

The NFDS is comprised of three redundant divisions of detectors~~, pre~~and NFDS amplifiers~~, and processing circuits~~ for single failure protection (Subsection 7.8.3.3). The wide range neutron flux monitors percent power up to 250 percent of the licensed power limit (Subsection 7.8.3.1.3). The power range neutron flux signal has a range of 0 percent to 125 percent of the licensed power limit (Subsection 7.8.3.1.2).

NFDS Criterion 6 – The location and sensitivity of at least one NFDS detector in the source range channel, along with the location and emission rate of the subcritical multiplication source, shall be designed to ensure that changes in reactivity will be reliably indicated even with the TSV shut down.

The positioning of the NFDS source range detectors, and the location, and emission rate of the subcritical multiplication source, is designed so that all three channels are on scale throughout filling. This includes while the TSV is empty of solution. NFDS source range signal increases with increasing target solution volume, and in this way, increasing reactivity will always produce an increase in count rate.

NFDS Criterion 7 – The NFDS shall have at least one detector in the power range channel to provide reliable readings to a predetermined power level above the licensed maximum power level.

The wide range neutron flux monitors percent power up to 250 percent of the licensed power limit (Subsection 7.8.3.1.3). The power range neutron flux signal has a range of 0 percent to 125 percent of the licensed power limit (Subsection 7.8.3.1.2).

NFDS Criterion 8 – The NFDS shall be separated from the PICS to the extent that any removal of a component or channel common to both the NFDS and the PICS preserves the reliability, redundancy, and independence of the NFDS.

The power range neutron flux signal has a range of 0 percent to 125 percent of the licensed power limit and has an accuracy of less than or equal to 1 percent of the full linear scale.

7.8.3.1.3 Wide Range

The wide range neutron flux connects the gap between the source range and the power range with overlap and is usable during both source and power range levels. The wide range neutron flux monitors percent power up to 250 percent of the licensed power limit.

The NFDS transmits the following wide range analog signals to the TRPS:

- NFDS wide range

The NFDS wide range neutron flux signal is input to the safety-related trip determination by the TRPS. The TRPS initiates an IU Cell Safety Actuation on high wide range neutron flux, as described in Subsection 7.4.4.

The wide range neutron flux signal has an accuracy of less than or equal to 1 percent of the full logarithmic scale.

7.8.3.2 Simplicity

The NFDS is an analog system with no digital communications for simplicity. In the source range, the NFDS provides voltage pulses corresponding to pulses from the associated fission chamber detector. In the wide range and power range, the signal from the compensated ion chambers is input to log and linear amplifiers corresponding to the neutron flux and is output to the TRPS as a 0 to 4 volt signal. Communications from the NFDS to the TRPS and PICS (via TRPS) are continuous through isolated outputs. The output isolation devices only allow for the data to be transmitted out of the system so that no failure from an interfacing system can affect the functions of the NFDS.

7.8.3.3 Single Failure

The NFDS is comprised of three redundant divisions of detectors~~, pre~~and NFDS amplifiers~~, and processing circuits~~. A single failure of any one of the divisions will not affect the functionality of the other two redundant divisions ensuring the required safety functions perform as designed during a design basis event. There are no shared signals from the NFDS that have both a TRPS safety-related protection function and a nonsafety-related control function. Failures of nonsafety-related systems do not impact the NFDS from performing its safety function.~~Interfacing systems with the NFDS are downstream of the NFDS such that a failure of an interfacing nonsafety system will not impact the NFDS.~~

7.8.3.4 Independence

The three divisions of the NFDS are physically and electrically independent of each other. Detectors are installed approximately 120 degrees equidistant around the SASS in relation to the ~~target solution vessel~~TSV. The detector cables are routed back to the TRPS electronics in physically separated electronics enclosures.

8a2.2 EMERGENCY ELECTRICAL POWER SYSTEMS

The emergency electrical power systems for the SHINE facility consist of the safety-related uninterruptible electrical power supply system (UPSS), the nonsafety-related standby generator system (SGS), and nonsafety-related local power supplies and unit batteries. The UPSS provides reliable power for the safety-related equipment required to prevent or mitigate the consequences of design basis events. The UPSS consists of a 125-volt direct current (VDC) battery subsystem, inverters, bypass transformers, distribution panels, and other distribution equipment necessary to feed safety-related alternating current (AC) and direct current (DC) loads and select nonsafety-related AC and DC loads.

The SGS consists of a single natural gas-driven generator, associated breakers, transfer switches, and distribution equipment. The SGS provides an alternate source of power for UPSS loads. Additionally, emergency power is provided by the SGS for facility physical security control systems and information and communications systems. Unit batteries provide power for egress and exit lights, switchgear control (station control batteries), and nonsafety-related local uninterruptible power supplies which provide back-up power for communications, data systems, and nonsafety-related control systems. The SGS provides an alternate source of power for the unit batteries and their associated loads.

Nonsafety-related local power supplies for the process integrated control system (PICS) and the facility data and communications systems (FDCS) are described in Sections 7.6 and 9a2.4, respectively.

8a2.2.1 UNINTERRUPTIBLE ELECTRICAL POWER SUPPLY SYSTEM DESIGN BASIS

The design of the UPSS is based on Criterion 27, Electrical power systems, and Criterion 28, Inspection and testing of electric power systems, of the SHINE design criteria. The SHINE design criteria are described in Section 3.1.

The purpose of the UPSS is to provide a safety-related source of power to equipment required to ensure and maintain safe facility shutdown and prevent or mitigate the consequences of design basis events. Safe shutdown is defined in the technical specifications.

The UPSS:

- Provides power at a sufficient capacity and capability to allow safety-related SSCs to perform their safety functions;
- Is designed, fabricated, erected, tested, operated, and maintained to quality standards commensurate with the importance of the safety functions to be performed;
- Is designed to withstand the effects of design basis natural phenomena without loss of capability to perform its safety functions;
- Is located to minimize, consistent with other safety requirements, the probability and effect of fires and explosions;
- Has sufficient independence, redundancy, and testability to perform its safety functions assuming a single failure;
- Incorporates provisions to minimize the probability of failure as a result of or coincident with the loss of power from the transmission network; and
- Permits appropriate periodic inspection and testing to assess the continuity of the system and the condition of components.

8a2.2.2 UNINTERRUPTIBLE ELECTRICAL POWER SUPPLY SYSTEM CODES AND STANDARDS

The UPSS is designed in accordance with the following codes and standards:

- National Fire Protection Association (NFPA) 70-2017, National Electrical Code (NFPA, 2017), as adopted by the State of Wisconsin (Chapter SPS 316 of the Wisconsin Administrative Code, Electrical)
- IEEE Standard 344 - 2013, IEEE Standard for Seismic Qualification of Equipment for Nuclear Power Generating Stations (IEEE, 2013); invoked to meet seismic requirements, as described in Subsection 8a2.2.3
- IEEE Standard 384 - 2008, Standard Criteria for Independence of Class 1E Equipment & Circuits (IEEE, 2008); invoked for separation and isolation of safety-related and nonsafety-related cables and raceways and for associated equipment, as described in Subsection 8a2.2.3
- IEEE Standard 450-2010, Recommended Practice for Maintenance, Testing, and Replacement of Vented Lead-Acid Batteries for Stationary Applications (IEEE, 2010a); invoked as guidance for the inspection of batteries, as described in Subsection 8a2.2.3
- IEEE Standard 484-2002, Recommended Practice for Installation Design and Installation of Vented Lead-Acid Batteries for Stationary Applications (IEEE, 2002); invoked as guidance for the installation of batteries, as described in Subsection 8a2.2.3
- IEEE Standard 485 - 2010, Recommended Practice for Sizing Lead-Acid Batteries for Stationary Applications (IEEE, 2010b); invoked for battery sizing of UPSS loads, as described in Subsection 8a2.2.3
- IEEE Standard 323-2003, Standard for Qualifying Class 1E Equipment for Nuclear Power Generating Stations (IEEE, 2003); invoked for environmental qualification of safety-related equipment as described in Subsection 8a2.2.3
- IEEE Standard 946-2004, Recommended Practice for the Design of DC Auxiliary Systems for Generating Stations (IEEE, 2004); invoked as guidance for the design of the DC components, as described in Subsection 8a2.2.3
- IEEE Standard C.37.20-2015, Standard for Metal-Enclosed Low-Voltage (1000 Vac and below, 3200 Vdc and below) Power Circuit Breaker Switchgear (IEEE, 2015b); invoked as guidance for the design of UPSS switchgear, as described in Subsection 8a2.2.3

While the UPSS is not classified as a Class 1E system, portions of Class 1E-related standards, as described in this section, are applied to the design of the UPSS in order to satisfy applicable SHINE design criteria.

8a2.2.3 UNINTERRUPTIBLE ELECTRICAL POWER SUPPLY SYSTEM DESCRIPTION

The safety-related UPSS provides a reliable source of power to the redundant divisions of AC and DC components on the safety-related power buses. Each division of the UPSS consists of a 125 VDC battery subsystem, 125 VDC to 208Y/120 volts alternating current (VAC) inverter, rectifier (battery charger), bypass transformer, static switch and a manual bypass switch, 208Y/120 VAC and 125 VDC distribution panels. Each division of the UPSS provides 208Y/120 VAC and 125 VDC power through automatic bus transfer ~~switche~~s and auctioneering to feed division C instrumentation and controls (I&C) system loads as described in Subsections 7.4.3.4 and 7.5.3.3. Nonsafety-related loads powered from the safety-related buses are isolated from the safety-related portion of the system by breakers or isolating fuses which

- Permits appropriate periodic inspection and testing to assess the continuity of the system and the condition of components.

8a2.2.5 STANDBY GENERATOR SYSTEM CODES AND STANDARDS

The SGS is designed in accordance with NFPA 70 - 2017, National Electrical Code (NFPA, 2017) as adopted by the State of Wisconsin (Chapter SPS 316 of the Wisconsin Administrative Code, Electrical).

8a2.2.6 STANDBY GENERATOR SYSTEM DESCRIPTION

The SGS consists of a 480Y/277 VAC, 60 Hertz (Hz) natural gas-driven generator, a 480 VAC switchgear, and transfer switches to allow the SGS switchgear to be connected to either or both 480 VAC NPSS transfer buses. Upon a loss of off-site power (LOOP) (i.e., undervoltage or overvoltage sensed on utility service), the SGS automatically starts, both non-vital breakers (NV BKR 1 and NV BKR 2) automatically open, and the transfer switches operate to provide power to the associated 480 VAC NPSS transfer bus. Upon a loss of normal power to any transfer switch, the SGS automatically starts, the associated non-vital breaker (NV BKR 1 or NV BKR 2) automatically opens, and the associated transfer switch operates to provide power to the associated 480 VAC NPSS transfer bus.

The loads supplied by the SGS include the loads supplied by the UPSS (see Table 8a2.2-1), as well as the following facility loads:

- Emergency lighting
- Facility data and communications system (FDCS) equipment
- Radiation area monitoring system (RAMS) detectors
- Continuous air monitoring system (CAMS) detectors
- Facility fire detection and suppression system (FFPS)
- Hot cell fire detection and suppression system (HCFD)
- PICS equipment
- Process vessel vent system (PVVS) equipment
- TPS SEC heaters
- Switchgear station batteries (NPSS, SGS)
- Facility access control system (FACS)
- Facility ventilation zone 4 (FVZ4) UPSS battery room and equipment room exhaust fans
- FDCS dedicated cooling systems

FDCS equipment, PICS equipment, and the FFPS contain nonsafety-related unit batteries or local uninterruptible power supplies to provide power to span the time between the LOOP event and the start of the SGS.

Emergency lighting located inside the main production facility is provided with unit batteries capable of supplying 90 minutes of illumination.

Operation of the SGS is not required for any safety function at the SHINE facility. Natural gas for the operation of the SGS is supplied by an off-site utility.

Table 8a2.2-1 – UPSS Load List
(Sheet 2 of 2)

Load Description	kVA Loads UPS-A	kVA Loads UPS-B	Required Runtime
Stack release monitoring system (SRMS), nonsafety-related	0.0	1.0	120 Min
TPS secondary enclosure cleanup (SEC) blowers, nonsafety-related	1.6	0.8	6 Hrs
Note: Required charger kVA does not include battery charging			
Note: Division C loads are accounted for in both Division A and Division B loads, where applicable			
Total:	**70.4**	**70.6**	
Required Reserve:	**7.0**	**7.1**	
Minimum Charger kVA:	**77.4**	**77.7**	

Table 8a2.2-2 – UPSS Battery Sizing
(Sheet 2 of 2)

Load Description	Amp-Hours Battery A	Amp-Hours Battery B
TPS secondary enclosure cleanup (SEC) subsystem, nonsafety-related		
Blowers	123	61
Note: Total amp-hours include inverter efficiency, 15 percent reserve margin to account for variations in equipment procurement, and 10 percent capacity margin for future needs		
Note: Division C loads are accounted for in both Division A and Division B loads, where applicable		
Total:	**582**	**546**
Total with 1.25 aging factor:	**728**	**683**

Figure 9a2.1-1 – Ventilation System Zone Designations Within the Main Production Facility

Figure 9a2.1-6 – Radiological Ventilation Zone 2 Supply Subsystem (RVZ2s) and Radiological Ventilation Zone 2 Recirculating Cooling Subsystem (RVZ2r) Flow Diagram

SNM is also used for neutron flux detection and measurement. Up to eight (alpha, neutron) neutron sources (e.g., Pu-238/Be) with combined strength up to [ ]SRI are used, one in each IU, for IU start-up operations, as described in Section 4a2.2. Additionally, up to 0.22 lbs. (100 g) of uranium 235 are used within neutron flux detectors.

The N2PS includes flow switches on the piping to the IU cells and RPF tanks to provide indication of normal operation when the purge is actuated. The flow switch status is provided to PICS.

N2PS solenoid valves include valve position indication. The position status for each valve is provided to TRPS if it serves ~~the~~individual IU cells or to ESFAS if it serves the IU cell header, the RPF header, or RPF tanks.

Oxygen sensors are provided in locations near N2PS equipment. The oxygen instruments alert operators locally of an asphyxiation hazard in the event of a nitrogen leak.

TRPS actuates the N2PS purge of the affected IU on loss of normal power to an IU cell after a delay or on loss of flow in TOGS.

ESFAS actuates the N2PS purge of the RPF tanks on loss of normal power to the PVVS or on loss of flow in PVVS.

9b.6.2.5 Radiological Protection and Criticality Control

The N2PS contains no special nuclear material or any other radioactive material. Therefore, the N2PS does not require shielding nor is criticality safety considered in the design.

9b.6.2.6 Technical Specifications

Certain material in this subsection provides information that is used in the technical specifications. This includes limiting conditions for operation, setpoints, design features, and means for accomplishing surveillances. In addition, significant material is also applicable to, and may be used for the bases that are described in the technical specifications.

Shielding and radiological protection is not required for the FPWS and the FPWS contains no SNM.

The FPWS is nonsafety-related.

9b.7.7.4 Instrumentation and Control

The FPWS hot water supply is equipped with automatic temperature controls capable of adjustments.

9b.7.7.5 Technical Specifications

There are no technical specification parameters associated with the FPWS.

9b.7.8 FACILITY NITROGEN HANDLING SYSTEM

9b.7.8.1 Design Bases

The facility nitrogen handling system (FNHS) is designed to supply liquid and compressed gaseous nitrogen to systems inside the RCA. The FNHS gaseous piping is designed, constructed, and tested in accordance with the ASME B31.9, Building Services Piping (ASME, 2011b). The FNHS liquid nitrogen piping is designed, constructed, and tested in accordance with ASME B31.3, Process Piping (ASME, 2013). The FNHS vaporizers, receivers, and bulk liquid nitrogen tanks are designed, constructed, and tested to the ASME Boiler and Pressure Vessel Code, Section VIII, Rules for Construction of Pressure Vessels (ASME, 2010). The balance of the equipment included in the FNHS is commercially available and is designed to standards satisfying the system operation.

The design basis of the FNHS includes:

- Provide nitrogen gas at the pressures and flow rates to operate sampling equipment in the RLWS system, the MEPS, the IXP system, and the VTS.
- Provide nitrogen gas supply in the RDS and the TSSS for liquid level detectors for system tanks.
- Provide nitrogen gas for sparging and mixing of tanks in the RLWS, the TSSS, the MEPS, the RDS, and the IXP system.
- Provide liquid and gaseous nitrogen to the TPS. Gaseous nitrogen is used by the TPS to operate pneumatic equipment. Liquid nitrogen is supplied to the TPS cryopumps and the thermal cycling absorption process (TCAP) isotope separation columns.
- Provide liquid nitrogen in dewars to the IXP system and the instrument laboratory for equipment cooling.
- Provide nitrogen gas to the TOGS for pressure regulation.
- ~~Provide nitrogen gas to the FFPS for pneumatic control mechanisms.~~
- Provide nitrogen gas to the MEPS pneumatic pumps for operating the pumps.
- Provide nitrogen gas to the LABS for low pressure utility and analytical tasks.
- Provide nitrogen gas to the PFBS for supercell isolation dampers.

The FNHS is not relied upon to prevent accidents that could cause undue risk to the health and safety of the workers and the public or to control or mitigate the consequences of such accidents.

Table 9b.7-5 – Facility Nitrogen Handling System Interfaces

Interfacing System	Interface Description
Quality control and testing analytical laboratories (LABS)	The FNHS provides liquid nitrogen to dewars to supply the needs of the instrument laboratory. The FNHS provides a nitrogen gas supply for low pressure utility and analytical tasks.
~~Facility fire detection and suppression system (FFPS)~~	~~The FNHS provides nitrogen gas to pneumatic actuators for the pre-action fire system.~~
Iodine and xenon purification and packaging (IXP) system	The FNHS provides nitrogen gas for product bottle sparging and sampling equipment. The FNHS portable dewars, containing liquid nitrogen, interface with the IXP cryotraps to cool system components.
Molybdenum extraction and purification system (MEPS)	The FNHS provides nitrogen gas to MEPS pneumatic pumps. The FNHS provides nitrogen gas to sampling equipment maintained by the MEPS.
Radioactive drain system (RDS)	The FNHS provides nitrogen gas to facilitate sparging and mixing operations in the RDS sump tanks. The FNHS provides a nitrogen gas supply for liquid level detectors in the RDS sump tanks.
Radioactive liquid waste storage (RLWS) system	The FNHS provides nitrogen gas to sampling equipment maintained by the RLWS. The FNHS provides nitrogen gas to facilitate sparging and mixing operations in the uranium liquid waste tanks. The FNHS provides a nitrogen gas supply for liquid level detectors in the liquid waste blending tanks, uranium liquid waste tanks, and liquid waste collection tanks.
Tritium purification system (TPS)	The FNHS provides liquid nitrogen directly piped to the TPS. The FNHS provides nitrogen gas for the operation of pneumatic equipment.
Target solution vessel (TSV) off-gas system (TOGS)	The FNHS maintains nitrogen gas supply to each of the TOGS skids through a penetration made in each cooling room.
Target solution staging system (TSSS)	The FNHS provides nitrogen gas to facilitate sparging and mixing operations in the target solution hold tanks and target solution storage tanks. The FNHS provides a nitrogen gas supply for liquid level detectors in the target solution hold tanks and target solution storage tanks.
Vacuum transfer system (VTS)	The FNHS provides nitrogen gas to sampling equipment maintained by the VTS.
Production facility biological shield (PFBS)	The FNHS provides nitrogen gas to isolation dampers maintained by the supercell.

12.1.2.9 Review and Audit Committee

The review and audit committee is responsible for the independent review and audit of the safety aspects of the SHINE facility operations. The review and audit committee is described in Section 12.2.

12.1.3 STAFFING

SHINE provides sufficient resources in personnel and materials to safely conduct operations.

(1) The minimum staffing when the facility is not secured shall be:
   (a) A senior licensed operator present in the facility,
   (b) A licensed operator or second senior licensed operator ~~or licensed operator~~ present in the control room, and
   (c) An additional designated person present at the facility able to carry out prescribed written instructions.

   Unexpected absence of the position described in (1)(a) for as long as 30 minutes to accommodate a personal emergency may be acceptable provided immediate action is taken to designate a replacement. Unexpected absence of the position~~s~~ described in ~~(1)(a) or~~ (1)(c) for as long as two hours to accommodate a personal emergency may be acceptable provided immediate action is taken to obtain a replacement.

(2) A list of facility personnel by name and telephone number shall be readily available in the control room for use by the operator. The list shall include:
   (a) Management personnel,
   (b) Radiation safety personnel, and
   (c) Other operations personnel.

Staffing requirements are included in the technical specifications.

The role of the operator in the SHINE facility is to perform the manual actions required to safely and efficiently manufacture medical isotopes. There are no postulated accident sequences that credit operator action to mitigate the consequences of the event after initiation of the event. Should an initiating event of a postulated accident sequence occur, operator actions provide a defense-in-depth, nonsafety-related, diverse means of actuating components.

12.1.4 SELECTION AND TRAINING OF PERSONNEL

SHINE establishes and maintains training programs for personnel performing, verifying, or managing facility operation activities to ensure that suitable proficiency is achieved and maintained. The Training Manager (TM) reports to the Director of Corporate Support (DCS) and is responsible for development and implementation of training that ensures satisfactory operational behavior and performance in the areas of nuclear, industrial, and radiological safety. American National Standards Institute/ American Nuclear Society (ANSI/ANS) 15.4-2016 is used in the selection and training of personnel (ANSI/ANS, 2016a). Records of personnel training and qualification are maintained.

In general, operations personnel have the combination of academic training, job-related experience, health, and skills commensurate with their level of responsibility that provides reasonable assurance that decisions and actions during normal and abnormal conditions are

12.1.4.1 Initial Training and Requalification

The licensed operator training program, including the requalification training program, is implemented in accordance with 10 CFR Part 55 as it pertains to non-power facilities and the guidance provided in ANSI/ANS 15.4-2016 (ANSI/ANS, 2016a). The SHINE facility operator training and requalification programs are described in Section 12.10.

12.1.4.2 10 CFR Part 19 Training

Individuals whose assigned duties involve exposure to radiation or radioactive material, and in the course of their employment are likely to receive, in a year, an occupational dose of radiation greater than 100 millirem (mrem) (1 millisievert [mSv]), receive instruction commensurate with their duties and responsibilities, as required by 10 CFR 19.12.

The design and implementation of the radiation protection training program complies with the requirements of 10 CFR 19.12.

12.1.5 RADIATION SAFETY

The RPP is described in greater detail in Subsection 11.1.2. The RPP meets the requirements of 10 CFR Part 20, Subpart B, and is consistent with the guidance provided in Regulatory Guide 8.2, Revision 1, Administrative Practices in Radiation Surveys and Monitoring, and ANSI/ANS 15.11-2016, Radiation Protection at Research Reactor Facilities (ANSI/ANS, 2016b). Development and implementation of the RPP is commensurate with the risks posed by a medical isotope production facility. Procedures and engineering controls are based upon sound RP principles to achieve occupational doses to on-site personnel and doses to members of the public that are as low as reasonably achievable (ALARA).

The organizational structure and responsibilities, including the radiation safety function, are described in Sections 12.1.1 and 12.1.2.

The RP Department is independent of facility operations. This independence ensures that the RP Department maintains its objectivity and is focused only on implementing sound RP principales necessary to achieve occupational doses and doses to members of the public that are ALARA.

RP staff maintain the ability to raise safety issues with the review and audit committee or executive management. The RP staff encompasses the clear responsibility and ability to interdict or terminate licensed activities that it believes are unsafe. This does not mean that the RP staff possesses absolute authority. If facility managers, the review and audit committee, and executive management agree, the decision of the RP staff could be overruled. However, this would be a rare occurrence that would be carefully analyzed and considered.

12.1.6 NUCLEAR SAFETY PROGRAM

The production facility safety program is implemented within the nuclear safety program and developed using methodologies as described in Interim Staff Guidance Augmenting NUREG-1537, Part 1, “Guidelines for Preparing and Reviewing Applications for the Licensing of Non-Power Reactors: Format and Content,” for Licensing Radioisotope Production Facilities and Aqueous Homogeneous Reactors (USNRC, 2012a); and Interim Staff Guidance Augmenting

12.2 REVIEW AND AUDIT ACTIVITIES

The Diagnostics General Manager (DGM) establishes the review and audit committee and ensures that the appropriate technical expertise is available for review and audit activities. The DGM holds approval authority for review and audit activities. Independent audits of the SHINE facility are conducted periodically.

The review and audit committee will interact with facility management through the dissemination of meeting minutes and meeting reports. SHINE will submit a written report or minutes of the findings and recommendations of the review group to Level 1 management and the review and audit group members in a timely manner after the review has been completed. SHINE will immediately report deficiencies uncovered that affect nuclear safety to Level 1 management.

12.2.1 COMPOSITION AND QUALIFICATIONS

The review and audit committee shall have the appropriate expertise and experience such that members provide the SHINE management an independent assessment of the operation. The DGM or designee chairs the review and audit committee and appoints additional members. The minimum number of the members shall be three. The qualifications for the review and audit committee members shall include a broad spectrum of technical, operational, and managerial expertise. At a minimum, the committee shall include members with expertise in facility operations, engineering, and radiation protection. Non-SHINE employees may be appointed as committee members, at the discretion of the chair. Assignment of non-SHINE employees to the committee will be necessary in circumstances when the required expertise to perform an activity is not available from SHINE employees (e.g., to perform an audit of an area where the only personnel with expertise in that area are immediately responsible for that area).

12.2.2 CHARTER AND RULES

The charter for the review and audit committee requires at least one meeting per year, with a quorum being a minimum of 50 percent of the voting committee membership where the facility operation~~g staff~~s personnel do~~es~~ not constitute a majority. Facility operations personnel consist of all facility personnel organizationally subordinate to, and including, the Director of Plant Operations (DPO). Dissemination, review, and approval of minutes shall occur within three months. The review and audit committee charter shall include provisions for the use of subgroups. Committee reports and reviews shall be distributed by memorandum to Level 1 management and other management as designated in the charter. Voting may be conducted at the meeting or by polling members with a majority required for approval.

12.2.3 REVIEW FUNCTION

At a minimum, the following items shall be reviewed:

- Determinations that proposed changes in equipment, systems, test, or procedures are allowed without prior authorization by the ~~responsible authority~~NRC (e.g., 10 CFR 50.59 safety reviews);
- All new procedures and major revisions having safety significance;
- Proposed changes in facility equipment or systems having safety significance;
- Proposed changes in technical specifications or license;
- Violations of technical specifications or license;

- Violations of internal procedures or instructions having safety significance;
- Operating abnormalities having safety significance;
- Reportable occurrences; and
- Audit/Assessment reports.

Upon completion of a review, a written report of any findings and recommendations of the review and audit committee shall be provided to SHINE executive management.

12.2.4 AUDIT FUNCTION

The audit function will include selective (but comprehensive) examination of operating records, logs, and other documents. Discussions with personnel and observation of operations will be used as appropriate. In no case will the individual immediately responsible for the area perform an audit in that area. SHINE will work to establish relationships with other entities to participate in audits of the facility. The following items will be audited:

- Facility operations for conformance to the technical specifications and applicable license conditions (including organization and responsibilities, training, operations, procedures, logs and records, health physics, technical specification compliance, and surveillances): at least once per calendar year (interval between audits not to exceed 15 months).
- The retraining and requalification program for the operating staff: at least once every other calendar year (interval between audits not to exceed 30 months).
- The results of action taken to correct those deficiencies that may occur in the ~~SHINE~~main production facility equipment, systems, structures, or methods of operations that affect nuclear safety: at least once per calendar year (interval between audits not to exceed 15 months).
- The SHINE facility emergency plan and implementing procedures: at least once every other calendar year (interval between audits not to exceed 30 months).
- The radiation protection plan: at least once per calendar year (interval between audits not to exceed 15 months).
- The quality assurance program description: at least once every other calendar year (interval between audits not to exceed 30 months).
- The physical security plan: at least once every other calendar year (interval between audits not to exceed 30 months).
- The nuclear criticality safety program: at least once every third calendar year (interval between audits not to exceed 36 months).
- The nuclear safety program and SHINE safety analysis summary report: at least once every third calendar year (interval between audits not to exceed 45 months).

Deficiencies identified during the audit will be entered into the corrective action program. Deficiencies uncovered that affect nuclear safety shall immediately be reported to Level 1 management. A written report of the findings of the audit shall be submitted to Level 1 management and the review and audit committee members within three months after the audit has been completed.

12.3 PROCEDURES

Procedures for the operation and use of the SHINE facility provide appropriate direction to ensure that the facility is operated normally within its design basis and in compliance with technical specifications. Procedures also provide guidance for addressing abnormal and emergency situations. These procedures are written, reviewed, and approved by appropriate management, as well as controlled and monitored to ensure that the content is technically correct, and the wording and format are clear and concise.

The process required to make changes to procedures, including substantive and minor permanent changes, and temporary deviations to accommodate special or unusual circumstances during operation is ~~in compliance with American National Standards institute/ American Nuclear Society (ANSI/ANS) 15.1-2007 (ANSI/ANS, 2007a).~~documented and includes a screening for 10 CFR 50.59 applicability.

SHINE will prepare, review, and approve written procedures for the following ~~basic~~ topics:

1. startup, operation, and shutdown of the irradiation unit (IU);
2. target solution fill, draining, and movement within the main production facility;
3. maintenance of major components of systems that may have an effect on nuclear safety;
4. surveillance checks, calibrations and inspections required by the technical specifications;
5. personnel radiation protection, consistent with applicable regulatory guidance. The procedures shall include management commitment and programs to maintain exposures and releases as low as reasonably achievable in accordance with ~~applicable guidance~~ANSI/ANS 15.11-2016, Radiation Protection at Research Reactor Facilities (ANSI/ANS, 2016b);
6. administrative controls for operations and maintenance and for the conduct of irradiations that could affect nuclear safety;
7. implementation of required plans (e.g., emergency, security); and
8. use, receipt, and transfer of byproduct material.

The specific procedures within these topic areas are developed in accordance with ~~Section 2.5 of~~ the SHINE Quality Assurance Program Description (QAPD).

SHINE shall review and approve written procedures prior to initiating any of the activities listed above. The procedures shall be reviewed by the SHINE review and audit committee and approved by Level 2 management or designated alternates, and such reviews and approvals shall be documented in a timely manner.

Substantive changes to procedures related to the activities listed above shall be made effective only after documented review by the SHINE review and audit committee and approval by Level 2 management or designated alternates. Minor modifications to the original procedure that do not change their original intent may be made by Level 3 management or higher, but the modifications must be approved by Level 2 or designated alternates. Temporary deviations from the procedures may be made by a senior licensed operator or higher individual present, in order to accommodate special or unusual circumstances or conditions. Such deviations shall be documented and reported within 24 hours or the next working day to Level 2 management or designated alternates. Review and approval of procedural changes shall be documented in a timely manner, in accordance with the SHINE document control procedure.

12.4

Required Actions

12.4.1 SAFETY LIMIT VIOLATION

As described in the technical specifications, in the event of a safety limit violation:

1. The SHINE facility operations ~~leading to the violation~~related to medical isotope production shall be shut down immediately and operation ~~of those affected processes~~ shall not be resumed until authorized by the NRC.
2. The safety limit violation shall be promptly reported to Level 2 management or designated alternates.
3. The safety limit violation shall be reported to the NRC.
4. A safety limit violation report shall be prepared. The report shall describe the following:
   a. Applicable circumstances leading to the violation including, when known, the cause and contributing factors;
   b. Effect of the violation upon facility structures, systems, and components (SSCs) and on the health and safety of personnel and the public; and
   c. Corrective action to be taken to prevent recurrence.

The report shall be reviewed by the review and audit committee, and any follow-up report shall be submitted to the NRC when authorization is sought to resume operation of the ~~affected processes~~SHINE facility.

12.4.2 OCCURRENCES REQUIRING SPECIAL REPORTS OTHER THAN A SAFETY LIMIT VIOLATION

In the event of an occurrence requiring a special report, as defined in technical specifications, other than a violation of a safety limit:

1. The affected processes or areas of the facility shall be returned to normal conditions or shut down. If it is necessary to shut down processes to correct the occurrence, operation of those affected processes shall not be resumed unless authorized by Level 2 management or designated alternates.
2. The occurrence shall be reported to Level 2 management or designated alternates and to the NRC as required by the technical specifications.
3. The occurrence shall be reviewed by the review and audit committee at its next scheduled meeting.

12.5 REPORTS

12.5.1 OPERATING REPORTS

An annual report covering the operation of the facility during the previous calendar year will be submitted to the NRC Document Control Desk within 30 days of the end of the calendar year providing the following information:

- A narrative summary of operating experience including the energy produced by each irradiation unit (IU) or the hours each IU was operating, or both.
- The unscheduled shutdowns including, where applicable, corrective action taken to preclude recurrence.
- Tabulation of major preventative and corrective maintenance operations having safety significance.
- Tabulation of major changes in the facility and procedures, including a summary of the evaluation leading to the conclusions that they are allowed ~~without prior NRC approval~~under 10 CFR 50.59.
- A summary of the nature and amount of radioactive effluents released or discharged to environs beyond SHINE's effective control, as determined at, or before, the point of such release or discharge. The summary will include to the extent practicable an estimate of individual radionuclides present in the effluent. If the estimated average release after dilution or diffusion is less than 25 percent of the concentration allowed or recommended, a statement to this effect is sufficient.
- A summarized result of environmental surveys performed outside the facility.
- Results of individual monitoring carried out by SHINE for each individual for whom monitoring was required by 10 CFR 20.1502.

12.5.2 SPECIAL REPORTS

Special reports are used to report unplanned events as well as planned major facility and administrative changes. Special reports will follow the schedule below.

There will be a report not later than the following working day by telephone and confirmed in writing by ~~facsimile~~electronic mail or similar conveyance to the NRC Operations Center, to be followed by a written report to the NRC Document Control Desk that describes the circumstances of the event within 14 days of any of the following:

- Violation of a safety limit;
- Release of radioactivity from the site above allowed limits;
- Operations with actual safety system settings for required systems less conservative than the limiting safety system settings specified in the technical specifications;
- Operation in violation of limiting conditions for operation established in the technical specifications unless prompt remedial action is taken;
- A safety system component malfunction that renders or could render the safety system incapable of performing its intended safety function, as described in the technical specifications;
- ~~An unanticipated or uncontrolled change in reactivity greater than one dollar;~~
- Abnormal and significant degradation of the primary system boundary (~~ex~~including minor leaks);~~ and~~

- Abnormal and significant degradation in the primary closed loop cooling system (PCLS) and the light water pool (excluding minor leaks); and
- An observed inadequacy in the implementation of administrative or procedural controls such that the inadequacy causes or could have caused the existence or development of an unsafe condition with regard to operations.

There will be a written report within 30 days to the NRC Document Control Desk of the following:

- Permanent changes in the facility organization involving Level 1 or Level 2 management, and
- Significant changes in the accident analysis as described in the Final Safety Analysis Report (FSAR).

12.6 RECORDS

The SHINE records management program includes the identification, generation, authentication, maintenance, and disposition of records. Records will be stored in the electronic data management system (EDMS) and may be in the form of logs, data sheets, or other suitable forms. The required information may be contained in single or multiple records, or a combination thereof.

Records of the following activities shall be maintained and retained for the periods specified below.

12.6.1 LIFETIME RECORDS

The following records are to be retained for the lifetime of the SHINE facility:

1. Gaseous and liquid radioactive effluents released to the environs;
2. Off-site environment-monitoring surveys required by the technical specifications;
3. Radiation exposure for all monitored personnel;~~ and~~
4. ~~Updated d~~Drawings of the SHINE facility; and
5. Records of reportable occurrences involving violations of safety limits, limiting safety system settings, and limiting conditions for operation.

Applicable annual reports, if they contain all of the required information, may be used as records in this section.

12.6.2 FIVE YEAR RECORDS

The following records are to be maintained for a period of at least five years or for the life of the component involved if less than five years:

1. Normal SHINE facility operation (but not including supporting documents such as checklists, log sheets, etc., which shall be maintained for a period of at least one year or one NRC inspection cycle, whichever is longer);
2. Principal maintenance operations;
3. Reportable occurrences (except those required to be retained for the lifetime of the SHINE facility);
4. Surveillance activities required by the technical specifications;
5. Facility radiation and contamination surveys where required by applicable regulations;
6. Radioactive material inventories, receipts, and shipments;
7. Approved changes in operating procedures; and
8. Records of meeting and audit reports of the review and audit ~~group~~committee.

12.6.3 RECORDS TO BE RETAINED FOR AT LEAST ONE CERTIFICATION CYCLE

Records of retraining and requalification of operations personnel who are licensed pursuant to 10 CFR 55 shall be maintained at all times while the individual is employed as a licensed operator or until the license is renewed.

ENCLOSURE 2
ATTACHMENT 2

SHINE TECHNOLOGIES, LLC

SHINE TECHNOLOGIES, LLC APPLICATION FOR AN OPERATING LICENSE SUPPLEMENT NO. 30

FINAL SAFETY ANALYSIS REPORT CHANGE SUMMARY
PUBLIC VERSION

PHASED STARTUP OPERATIONS APPLICATION SUPPLEMENT MARKUP

Individual inputs to the ESFAS are disabled using the maintenance workstation (MWS). Physically, this process occurs in a similar manner to modifying a setpoint with the MWS. The technician performing the modification accesses the MWS with a password, selects the ESFAS, the division, the specific safety function module (SFM), and the individual input to be disabled. The technician then activates a hardwired switch near the MWS to allow for physical connection of the MWS to the calibration and test bus (CTB). The technician then toggles the input disable switch on the MWS that indicates the individual input is disabled. The technician asserts the disable function to complete disabling of the individual input. The disable status associated with the disabled input is stored in a location on the SFM's non-volatile memory (NVM). The NVM location is loaded to the triplicated logic designs on the field programmable gate array (FPGA) during startup or a manual NVM data load command from the module's front panel switch. The SFM's safety function logic is independent (i.e., different logic resources on the FPGA) from both the logic used to store information to the NVM and the logic used to load information from the NVM to the safety function logic.

Individual inputs for each safety actuation not required to be operable and that would prevent facility operation in a given phase are disabled across all divisions. The disabling of these inputs causes the ESFAS to not process them as an actuation request, and hence, does not initiate unnecessary protection actions based upon them. The MWS continues to function as described in Subsection 7.4.5.3.3 of the FSAR. Information for inputs that are disabled will be transmitted to the PICS and displayed to the operator as described in Section 7.6.3.

The TRPS IU Cell 1/2/3/4/5/6/7/8 Nitrogen Purge signals are actuation signals that are transmitted from the TRPS to the ESFAS. Because these signals are not transmitted into the appropriate SFMs but rather the schedule, voting, and bypass modules (SBVMs), there is no ability to disable the inputs. However, these signals are not asserted for TRPS instances that are not applicable to a phase of operation.

The modification to the generic HIPS platform to disable individual inputs does not impact how the TRPS and ESFAS satisfy application specific action items (ASAIs) 24 and 54 described in the HIPS topical report Safety Evaluation Report (SER) (USNRC, 2017) or how the TRPS and ESFAS comply with IEEE Standard 7-4.3.2-2003 (IEEE, 2003), as described in Subsection 7.4.5.1 of the FSAR.

The HIPS design attributes provided in Subsection 7.4.5.2 of the FSAR are not affected by phased startup operations. Since the TRPS is being implemented in instances associated with individual IUs, the HIPS design is being implemented in full for each instance. The disabling of individual inputs to the ESFAS do not impact the independence, redundancy, and diversity of the ESFAS in a given phase. No new failure modes are introduced by disabling individual inputs, so the failure modes and effects analysis (FMEA), diversity and defense-in-depth assessment, and single failure analysis are not affected. The descriptions of independence, redundancy, predictability and repeatability, diversity, and simplicity provided in Subsection 7.4.5.2 of the FSAR are not affected by phased startup operations. The HIPS platform timing shown in Figure 7.4-2 of the FSAR is not affected by phased startup operations.

The access control and cyber security considerations provided in Subsection 7.4.5.3 of the FSAR are not affected by phased startup operations.

The software requirements development considerations provided in Subsection 7.4.5.4 of the FSAR are not affected by phased startup operations. For cabinets not in operation, implementation and verification of the appropriate software version occurs during the testing

Table 7.5-1 – Monitored Variable Inputs Disabled During Phases of Startup Operations

Input Variable	Phase(s) Disabled
TPS confinement B tritium	1
TPS IU cell 3 target chamber supply pressure	1
TPS IU cell 3 target chamber exhaust pressure	1
TPS IU cell 4 target chamber supply pressure	1
TPS IU cell 4 target chamber exhaust pressure	1
TPS IU cell 5 target chamber supply pressure	1
TPS IU cell 5 target chamber exhaust pressure	1
~~TRPS IU cell 3 nitrogen purge~~	~~1~~
~~TRPS IU cell 4 nitrogen purge~~	~~1~~
~~TRPS IU cell 5 nitrogen purge~~	~~1~~
High TPS confinement C tritium	1, 2
TPS IU cell 6 target chamber supply pressure	1, 2
TPS IU cell 6 target chamber exhaust pressure	1, 2
TPS IU cell 7 target chamber supply pressure	1, 2
TPS IU cell 7 target chamber exhaust pressure	1, 2
TPS IU cell 8 target chamber supply pressure	1, 2
TPS IU cell 8 target chamber exhaust pressure	1, 2
~~TRPS IU cell 6 nitrogen purge~~	~~1, 2~~
~~TRPS IU cell 7 nitrogen purge~~	~~1, 2~~
~~TRPS IU cell 8 nitrogen purge~~	~~1, 2~~
RVZ1 supercell area 10 (IXP) exhaust ventilation radiation	1, 2, 3
IXP lower three-way valve position indication	1, 2, 3
IXP upper three-way valve position indication	1, 2, 3

ENCLOSURE 2
ATTACHMENT 3

SHINE TECHNOLOGIES, LLC

SHINE TECHNOLOGIES, LLC APPLICATION FOR AN OPERATING LICENSE SUPPLEMENT NO. 30

FINAL SAFETY ANALYSIS REPORT CHANGE SUMMARY
PUBLIC VERSION

TECHNICAL SPECIFICATIONS MARKUP

Table 3.7.1-a Safety-Related Radiation Monitoring Instruments

	Monitored Location	Setpoint and Monitored Material	Required Channels	Applicability (per IU, TPS train, or monitored location)	Action
a.	RVZ1 supercell exhaust ventilation (PVVS hot cell)	≤ 7.6E-05 µCi/cc ~~5x background~~ Fission products	3	RPF Nitrogen Purge not Operating when the Facility is not Secured	1, 2, 3
b.	RVZ1 supercell exhaust ventilation (Extraction and IXP hot cells)	≤ 7.6E-05 µCi/cc~~5x background~~ Fission products	2 (per hot cell)	Target solution or radioactive process fluids present in the associated hot cell	4, 5
c.	RVZ1 supercell exhaust ventilation (Purification and Packaging hot cells)	≤ 7.6E-05 µCi/cc~~5x background~~ Fission products	2 (per hot cell)	Radioisotope products or radioactive process fluids present in the associated hot cell	4, 5
d.	RVZ1 RCA exhaust	≤ 1.3E-05 µCi/cc~~5x background~~ Fission products	3	Facility not Secured	1, 6, 7
e.	RVZ2 RCA exhaust	≤ 9.1E-07 µCi/cc~~5x background~~ Fission products	3	Facility not Secured	1, 6, 7
f.	RVZ1e IU cell exhaust	≤ 9.6E-03 µCi/cc ~~5x background~~ Fission products	3 (per IU)	Associated IU in Mode 1, 2, 3, or 4	1, 8
g.	TPS confinement A/B/C	≤ 927 Ci/m^3 Tritium	2 (per TPS train)	Tritium present in associated TPS process equipment and not in storage	9
h.	TPS exhaust to facility stack	≤ 0.96 Ci/m^3 Tritium	3	Tritium present in any TPS process equipment and not in storage	1, 10
i.	MEPS heating loop extraction area A/B/C	≤ ~~1000~~1110 mR/hr Fission products	2 (per hot cell)	Target solution or radioactive process fluids present in the associated hot cell	11, 12

Additional discussion for each variable listed in Table 3.7.1-a is provided below:

a. The supercell PVVS hot cell contains equipment for the PVVS and VTS, which contain fission product gases. The RVZ1 supercell area 1 radiation monitors provide an actuation signal that isolates the affected hot cell and initiates a VTS Safety Actuation to minimize the spread of radioactive material, as described in FSAR Subsection 7.5.4.1.2. The setpoint of 7.6E-05 µCi/cc considers instrument uncertainties and provides margin to an analytical limit of 1.2E-04 µCi/cc. Three channels of radiation monitoring are provided.

   With one channel inoperable, the SFM for the associated channel is placed in trip within 2 hours and must be restored to Operable within ~~30 days~~72 hours. With two channels inoperable, or if actions for one channel inoperable are not met, at least one damper in the inlet and outlet of the associated hot cell must be closed within 12 hours, the VTS vacuum pump breakers must be opened within 12 hours, and at least one VTS vacuum break valve must be opened within 12 hours. A completion time of 12 hours allows for the performance of minor repairs and is acceptable based on the continued availability of the redundant channel. With 3 channels inoperable, at least one damper in the inlet and outlet of the associated hot cell must be closed within 1 hour, the VTS vacuum pump breakers must be opened within 1 hour, and at least one VTS vacuum break valve must be opened within 1 hour. A completion time of 1 hour recognizes the importance of promptly isolating the equipment to mitigate a potential accident once the safety function has been lost.

   The RVZ1 supercell exhaust ventilation (PVVS hot cell) channels may be rendered temporarily inoperable in accordance with LCO 3.0.1.4 to facilitate resetting ESFAS and restoring the RVZ1 system to normal operations.

b. The supercell extraction and IXP hot cells periodically contain irradiated target solution. The RVZ1 supercell area 2/6/7/10 radiation monitors provide an actuation signal that isolates the affected hot cell to minimize the spread of radioactive material, as described in FSAR Subsections 7.5.4.1.3 and 7.5.4.1.4. The setpoint of 7.6E-05 µCi/cc considers instrument uncertainties and provides margin to an analytical limit of 1.2E-04 µCi/cc. Two channels of radiation monitoring are provided per area.

   With one channel inoperable, at least one damper in the inlet and outlet of the associated hot cell must be closed and operations involving the transfer or processing of target solution, radioactive process fluids or radioisotope products in the associated hot cell must be suspended within 12 hours. A completion time of 12 hours allows for the performance of minor repairs and is acceptable based on the continued availability of the redundant channel. With two channels inoperable, at least one damper in the inlet and outlet of the associated hot cell must be closed and operations involving the transfer or processing of target solution, radioactive process fluids or radioisotope products in the associated hot cell must be suspended within 1 hour. A completion time of 1 hour recognizes the importance of promptly isolating the equipment to mitigate a potential accident once the safety function has been lost.

   The RVZ1 supercell exhaust ventilation (Extraction and IXP hot cells) channels may be rendered temporarily inoperable in accordance with

LCO 3.0.1.4 to facilitate resetting ESFAS and restoring the RVZ1 system to normal operations.

c. The supercell purification and packaging hot cells periodically contain isotope products. The RVZ1 supercell area 3/4/5/8/9 radiation monitors provide an actuation signal that isolates the affected hot cell to minimize the spread of radioactive material, as described in FSAR Subsection 7.5.4.1.5. The setpoint of 7.6E-05 µCi/cc considers instrument uncertainties and provides margin to an analytical limit of 1.2E-04 µCi/cc. Two channels of radiation monitoring are provided per area.

With one channel inoperable, at least one damper in the inlet and outlet of the associated hot cell must be closed and operations involving the transfer or processing of target solution, radioactive process fluids or radioisotope products in the associated hot cell must be suspended within 12 hours. A completion time of 12 hours allows for the performance of minor repairs and is acceptable based on the continued availability of the redundant channel. With two channels inoperable, at least one damper in the inlet and outlet of the associated hot cell must be closed and operations involving the transfer or processing of target solution, radioactive process fluids or radioisotope products in the associated hot cell must be suspended within 1 hour. A completion time of 1 hour recognizes the importance of taking prompt action once the safety function has been lost.

The RVZ1 supercell exhaust ventilation (Purification and Packaging hot cells) channels may be rendered temporarily inoperable in accordance with LCO 3.0.1.4 to facilitate resetting ESFAS and restoring the RVZ1 system to normal operations.

d. The RVZ1 RCA exhaust location is monitored for elevated radiation originating from RVZ1 spaces, including the supercell and the PCLS expansion tanks, which communicate with the IU cell atmospheres. The RVZ1 RCA exhaust radiation monitors provide an actuation signal that performs an RCA Isolation to minimize the spread of radioactive material, as described in FSAR Subsection 7.5.4.1.1. The setpoint of 1.3E-05 µCi/cc considers instrument uncertainties and provides margin to an analytical limit of 1.9E-05 µCi/cc. Three channels of radiation monitoring are provided.

With one channel inoperable, the SFM for the associated channel is placed in trip within 2 hours and must be restored to Operable within ~~30 days~~72 hours. With two channels inoperable, the RCA isolation actuation components must be placed in their actuated state within 12 hours. A completion time of 12 hours allows for the performance of minor repairs and is acceptable based on the continued availability of the redundant channel. With three channels inoperable, the RCA isolation actuation components must be placed in their actuated state within 1 hour. A completion time of 1 hour recognizes the importance of taking prompt action once the safety function has been lost.

The RVZ1 RCA exhaust channels may be rendered temporarily inoperable in accordance with LCO 3.0.1.4 to facilitate resetting ESFAS and restoring the RVZ1 system to normal operations.

e. The RVZ2 RCA exhaust location is monitored for elevated radiation originating from RVZ2 spaces, which include the general area of the

irradiation facility (IF) and RPF. The RVZ2 RCA exhaust radiation monitors provide an actuation signal that performs an RCA Isolation to minimize the spread of radioactive material, as described in FSAR Subsection 7.5.4.1.1. The setpoint of 9.1E-07 µCi/cc considers instrument uncertainties and provides margin to an analytical limit of 1.4E-06 µCi/cc. Three channels of radiation monitoring are provided.

With one channel inoperable the SFM for the associated channel is placed in trip within 2 hours and must be restored to Operable within ~~30 days~~72 hours. With two channels inoperable, the RCA isolation actuation components must be placed in their actuated state within 12 hours. A completion time of 12 hours allows for the performance of minor repairs and is acceptable based on the continued availability of the redundant channel. With three channels inoperable, the RCA isolation actuation components must be placed in their actuated state within 1 hour. A completion time of 1 hour recognizes the importance of taking prompt action once the safety function has been lost.

The RVZ2 RCA exhaust channels may be rendered temporarily inoperable in accordance with LCO 3.0.1.4 to facilitate resetting ESFAS and restoring the RVZ2 system to normal operations.

f. The RVZ1e IU cell exhaust location is monitored for elevated radiation in the PCLS or IU cell atmosphere for each IU. The RVZ1e IU cell radiation monitors provide an actuation signal that results in an IU Cell Safety Actuation to minimize the spread of radioactive material, as described in FSAR Subsection 7.4.4.1.15. The setpoint of 9.6E-03 µCi/cc considers instrument uncertainties and provides margin to an analytical limit of 1.5E-02 µCi/cc. Three channels of radiation monitoring are provided per IU. With one channel inoperable the SFM for the associated channel is placed in trip within 2 hours and must be restored to Operable within ~~30 days~~72 hours. With fewer than two required channels Operable, the associated IU is placed in Mode 3 within 6 hours by automatic or manual transitions. At least one RVZ1e IU cell ventilation damper for the associated IU cell is also required to be closed within 6 hours. This completion time allows for the performance of minor repairs and allows for the affected IU to be shut down or the affected processes to be halted in an orderly manner. The completion time is acceptable based on the continued availability of the redundant TRPS Division(s) to sense adverse conditions and actuate equipment in response to an event. Transfer of target solution out of the IU to achieve Mode 0 requires the target solution to be held in the TSV dump tank for at least the minimum period of time specified in LCO 3.1.8 prior to transfer. Approximately [ ]PROP/ECI are required to complete the transfer of target solution to the RPF.
The RVZ1e IU cell exhaust channels may be rendered temporarily inoperable in accordance with LCO 3.0.1.4 to facilitate resetting TRPS and restoring the RVZ1e system to normal operations.

g. The TPS confinement A, B, and C atmospheres are monitored for tritium. There is normally a low tritium concentration on the order of less than 1 mCi/m^3 in the TPS glovebox due to process equipment leakage and tritium permeation. The TPS glovebox tritium concentration setpoint of 927 Ci/m^3 considers instrument uncertainties and is based on an analytical limit of

1000 Ci/m^3. A tritium concentration in excess of this limit is indicative of excessive amounts of tritium leaking from TPS process equipment, as described in FSAR Subsection 7.5.4.1.13. The radiation monitors provide an actuation signal that isolates the associated glovebox and ventilation of the TPS room to minimize the spread of radioactive material. Two channels of radiation monitoring are provided.

With fewer than two required channels Operable, tritium is required to be returned to its storage location within 12 hours (i.e., a depleted uranium bed) or at least one redundant TPS Train Isolation device per associated TPS glovebox confinement flow path is closed within 12 hours to provide the isolation function. A completion time of 12 hours allows for the performance of minor repairs and is acceptable based on the low likelihood of a tritium release during the allowed time.

The TPS confinement A/B/C channels may be rendered temporarily inoperable in accordance with LCO 3.0.1.4 to facilitate resetting ESFAS and restoring the associated TPS train to normal operations.

h. The TPS exhaust to the facility stack is monitored for tritium. The TPS secondary enclosure cleanup (SEC) normally reduces tritium concentrations

that enter RVZ1e to less than 10 µCi/m^3. The TPS exhaust to the facility stack tritium concentration setpoint of 0.96 Ci/m^3 considers instrument uncertainties and is based on an analytical limit of 1 Ci/m^3. A tritium concentration in excess of this limit is indicative of a malfunction of the TPS or a tritium release, as described in FSAR Subsection 7.5.4.1.12. The radiation monitors limit the spread of tritium throughout and outside the facility via the ventilation system by providing an actuation signal that isolates the potential release paths to the facility stack from all three TPS gloveboxes via a TPS Process Vent Actuation. Three channels of radiation monitoring are provided.

With one channel inoperable, the SFM for the associated channel is placed in trip within 2 hours and must be restored to Operable within ~~30 days~~72 hours. With two or three required channels inoperable, tritium is required to be returned to its storage location within 12 hours (i.e., a depleted uranium bed) or at least one redundant TPS Process Vent Actuation device per TPS exhaust flow path is closed within 12 hours to provide the isolation function. A completion time of 12 hours allows for the performance of minor repairs and is acceptable based on the low likelihood of a tritium release during the allowed time.

i. The ESFAS monitors radiation in the MEPS heating water loop to protect against a leakage of high radiation solutions into the MEPS hot water heating loops, as described in FSAR Section 4b.3 and Subsection 7.5.4.1.6. The MEPS heating loops extend outside of the supercell; radioactive material in the loop would lead to increased radiological doses to workers, as described in FSAR Subsection 13b.1.2.3 (Scenario 14). Two channels of radiation monitors are provided for each extraction hot cell. Radiation exceeding ~~1000~~ 1100 mR/hr results in a MEPS Heating Loop Isolation for that heating loop for the associated extraction cell, and provides margin to an analytical limit of 2500 mR/r.