Official Transcript of Proceedings

NUCLEAR REGULATORY COMMISSION

Title: Advisory Committee on Reactor Safeguards
Plant Operations and Fire Protection

Docket Number: (n/a)

Location: teleconference

Date: Tuesday, August 16, 2022

Work Order No.: NRC-2066 Pages 1-188

NEAL R. GROSS AND CO., INC.
Court Reporters and Transcribers
1716 14th Street, N.W.
Washington, D.C. 20009
(202) 234-4433

1
2
3
4 DISCLAIMER
5
6
7 UNITED STATES NUCLEAR REGULATORY COMMISSION'S
8 ADVISORY COMMITTEE ON REACTOR SAFEGUARDS
9
10
11 The contents of this transcript of the
12 proceeding of the United States Nuclear Regulatory
13 Commission Advisory Committee on Reactor Safeguards,
14 as reported herein, is a record of the discussions
15 recorded at the meeting.
16
17 This transcript has not been reviewed,
18 corrected, and edited, and it may contain
19 inaccuracies.
20
21
22
23

UNITED STATES OF AMERICA

NUCLEAR REGULATORY COMMISSION

+ + + + +

ADVISORY COMMITTEE ON REACTOR SAFEGUARDS

(ACRS)

+ + + + +

SUBCOMMITTEE ON PLANT OPERATIONS AND FIRE PROTECTION

+ + + + +

TUESDAY

AUGUST 16, 2022

+ + + + +

The Subcommittee met via Teleconference, at 9:30 a.m. EDT, Gregory H. Halnon, Chairman, presiding.

COMMITTEE MEMBERS:

GREGORY H. HALNON, Chairman

RONALD G. BALLINGER, Member

VICKI M. BIER, Member

VESNA B. DIMITRIJEVIC, Member

WALTER L. KIRCHNER, Member

JOSE MARCH-LEUBA, Chairman

DAVID A. PETTI, Member

JOY L. REMPE, Member

MATTHEW W. SUNSERI, Member

ACRS CONSULTANTS:

DENNIS BLEY

KEN CZERWINSKI

STEPHEN SCHULTZ

DESIGNATED FEDERAL OFFICIAL:

WEIDONG WANG

CONTENTS

P R O C E E D I N G S

9:31 a.m.

CHAIRMAN HALNON: Good morning, everyone. This meeting will come to order.

This is the meeting of the Plant Operations and Fire Protection Subcommittee of the Advisory Committee on Reactor Safeguards.

As I mentioned, I'm Greg Halnon, Chairman of today's meeting.

ACRS members in attendance are -- the ones in the room here first -- Jose March-Leuba, Joy Rempe, Matt Sunseri, Ron Ballinger. Kirchner (audio interference) here. And then, online we have (audio interference). I think Dave Petti is on the line. Vesna's on. (Audio interference.)

Is this better? I just moved the microphone. So, it's loud in here. So, can you hear me okay, Court Reporter?

DR. BLEY: Hey, Greg, it's Dennis. The mics are cutting in and out. I'm not sure why.

CHAIRMAN HALNON: I can't get this one any closer to my face. So, if this is not adequate, we're going to have to work on (audio interference).

Okay, I'm going to continue on and I'll speak loudly. Hopefully, it will work here.

Obviously, we have Dennis Bley, who is one of our consultants. Ken Czerwinski is here in the room as a consultant. And I didn't see Steve Schultz on. Apparently, he's not on today. And Dennis Bley is online.

Okay. During today's meeting, the Subcommittee will hear presentations and hold discussions from the NRC staff of Region III Operation on their experiences in the area of risk-informed technical specifications, inspection, and reactor oversight processes, Davis-Besse performance issues, and other topics as they come up.

Part of the presentation by the NRC staff may be closed in order to discuss information that's security-related, pursuant to 5 USC Part 52(b)(c)(3).

Attendance at the meeting that deals with such information will be limited to the NRC staff and its consultants and organizations who have entered into appropriate confidentiality agreement with them. Consequently, we need to confirm that we have only eligible (audio interference) and participants in that closed part of the meeting.

The rules for participation in all ACRS meetings, including today's, were announced in The Federal Register on June 13, 2019.

The ACRS section of the U.S. NRC public website provides our Charter, Bylaws, agendas, Letter Reports, and full transcripts of all full and subcommittee meetings, including slides presented at these meetings. The meeting notice and agenda for this meeting are posted there.

We have received no written statements or requests to make an oral statement from the public.

Today's meeting is being held in Region III with Microsoft Teams, which includes a telephone bridge line allowing participation of the public over their computer using Teams or by phone.

There will be an opportunity for public comment, and we have set aside time at the conclusion of the prepared open presentations and member discussions from those comments.

A transcript of the meeting is being kept, and it's requested that speakers identify themselves and speak with sufficient clarity and volume, so that they can be readily heard.

Additionally, participants should mute themselves when not speaking. To mute/unmute on a phone, please use *6.

We will now proceed with the meeting. And I want to do another sound check. So, Dennis, you

raised the question. Can you hear me now?

DR. BLEY: Yes, it's much better and it's fine unless you turn your head away from the mic a little, and then, it cuts out.

CHAIRMAN HALNON: Okay. We are in mask at the meeting here today. So, it just exaggerates the issue. You have to speak very clearly into the microphone. You can see how close I am to it, and regrettably, we're going to have to just accommodate the best that we can.

Okay. Let me now proceed with the meeting. I'd like to start by calling on the Region III staff.

MR. SHUAIBI: Hello. Good morning.

My name is Mohammed Shuaibi.

Can you hear me okay? I'll try my best.

My name is Mohammed Shuaibi. I'm the Deputy Regional Administrator in Region III.

I want to welcome (audio interference) to Region III on behalf of the Regional Administrator, myself, and the entire Region III staff. It's our pleasure to host you here and to have this meeting with you all.

And I want to cover a little bit of the safety protocol here in the building in case of a fire

alarm or a tornado. Follow some of our staff. For tornado purposes, we would take the stairs down to the parking lot of the building and we would gather down in an area not far from the stairs to your right.

In case of a fire, we would go down to the main level and exit to the back of the building and gather for assembly in the back of the parking lot. Again, just follow some of our staff and they'll lead and make sure everybody's safe and accounted for.

Looking at the agenda, I think we've got some pretty good topics here that are actually relevant in today's environment. I appreciate the coordination with your staff on these topics in the agenda.

It ends up risk-informed decisionmaking and use of risk information is happening in industry, and we are very mindful of that and ourselves becoming a more modernistic regulator. And we've actually got quite a bit going on to focus on how we would use it and how we would use it to invest in (audio interference) safety. So, we've got a lot going on that we'll talk about.

We've got Laura Kozak. She's our Senior Reactor Analyst here in Region III.

Julio Lara is Director of the Division of

Reactor Projects. He is also our lead for risk-informed decisionmaking. He holds the (audio interference) and sponsored a group here in the Region to advance our thinking in risk information. He also a lead on the agency level of risk-informed decisionmaking. And he'll be speaking to some of those activities.

A little later on the agenda, we'll talk about how the pandemic, the COVID environment, has changed the way that we get information and we use information from licensees. Some of our Resident Inspectors and some of our traveling DRS Inspectors will be talking to you about some of the tools that we use today that we didn't use before, not for lack of availability of the tools necessarily, but the pandemic did drive us to actually use those tools more easily, or licensees were able to give them to us and we were able to use them. In some cases, we had visual tools that we brought to bear, just like we do here in Teams, if you will.

Billy Dickson, at the end of the table, is our Acting Deputy Division Director for the Division of Reactor Projects. And he will be talking about (audio interference) performance.

And then, I'll come back and I'll cover a

little bit of trends and areas of focus for us. I may cover some of the same material that you will hear from our staff, but I'll come back and just summarize some of that stuff and get any additional questions.

In the afternoon, we're going to be talking about a couple of plant issues that we've had at Davis-Besse. Both of them are (audio interference) issues and both of them are the reasons that we'll talk about later in terms of the (audio interference) that we have created in Region III. That's in Volume II of the ROP Action Matrix. So, we'll talk about the Davis-Besse speed switch failure and the Davis-Besse cybersecurity issue that we have.

People that are talking about these are a good cross-section from the Region, if you will. We have Resident Inspectors, our Senior Resident Inspectors presenting. We have (audio interference) Inspectors that (audio interference) on reactor safety organizations. So, I'm glad that we've got the opportunity to showcase both sides, if you will, of how the Region is doing business for the reactor world, the people that are stationed at the plants, as well as the people travel out in the field and do specialized inspection. We will hear directly from them on things that they're seeing and things that

they're experiencing as well.

So, again, on behalf of all of all Region III, I welcome you. I hope you had safe travels and a nice flight to get here. I know that's not a given in these days.

And one thing, I am going to step out for a little bit. I have some mandatory training today that I'm in. So, I'll step out and leave you in good hands with the team here and the team that's going to be presenting. But I will be back in the 11 o'clock session to kind of wrap up the morning.

Greg, any questions? Or if not, I'll turn it back over to you.

CHAIRMAN HALNON: The only question I have, I notice the microphone has changed. I'll just ask Dennis, can you hear any better now?

DR. BLEY: Yes, it was pretty good.

CHAIRMAN HALNON: Okay. I'm thinking that the change in microphones (audio interference).

(Pause.)

CHAIRMAN HALNON: Okay, I think we are working on getting the table mics, rather than the room mic, involved.

So, is that better? I'm talking in a normal mode. Is that better, Court Reporter?

COURT REPORTER: Yes.

DR. BLEY: Me, too.

CHAIRMAN HALNON: Okay. So, Mo, thank you for your opening remarks and we look forward to the presentation.

Joy?

MEMBER REMPE: I have a question. I looked through the slides and I did not see anything about what's going on with the Quad Cities and the valve failure. Are you going to mention that when you go through things later today?

MR. SHUAIBI: We can.

MEMBER REMPE: I'd appreciate it. I'm just curious about what was going on with it.

MR. SHUAIBI: Yes. We weren't planning to because it's still in process. But we did issue a Choice Letter with a preliminary White finding. That can change. I'm sure you're familiar with the process. The licensee has a chance to submit information or come in for a RAD conference. But we have a team here that can speak to it; absolutely, we can if you are interested in hearing about that.

MEMBER REMPE: All I read was what was the popular press, but it sounds like that it was in that state for quite a period of time. And so, I'd be

interested in your thoughts.

MR. LARA: This is Julio Lara, NRC, Region III.

We can certainly speak to it. We can speak to material that's currently in the public domain, the docket, and we can address some of the questions you have.

Our Senior Reactor Analyst is about to come on now. She's very heavily involved in this issue. So, we can provide a current status, as well as some of the history and the condition that it was found in and has been for the period of time a concern.

MEMBER REMPE: Okay. Thank you.

MR. LARA: Uh-hum.

CHAIRMAN HALNON: Any other members have any questions or comments upfront?

(No audible response.)

Okay. Back to you, Mo, and your staff.

MR. SHUAIBI: All right. I'm going to go ahead and turn it over to Laura Kozak.

Laura, are you on?

MS. KOZAK: I'm here.

MR. SHUAIBI: All right. You got it. So, I'll turn it over to Laura Kozak, and I'll be leaving

here. And I'll be back.

Thank you.

MS. KOZAK: So, good morning, everybody.

My name is Laura Kozak. I'm a Senior Reactor Analyst here in the Region.

For those of you who might not be familiar with the position of the Senior Reactor Analyst, there's two in each Regional Office and two in Headquarters. We are qualified inspectors who have also gone through a training program to learn about risk, PRA, in order to be able to help everybody in the Region with risk-informed approaches to things, and to do the risk assessments that are necessary to support the ROP.

So, I'm going to talk to the first two items on the agenda: our experience with risk-informed tech specs, and then, the follow-on topic about our use of PRA and our assessment of licensee capabilities.

So, next slide, please.

So, I have been keeping this table for my own personal use for quite some time, just to have kind of on one page where are the licensees, the utilities, in our Region with respect to some of the more important risk-informed programs. And so, I

present it here. I'm going to go through it a little bit just to give you a flavor of what we have in the Region.

So, we have our sites in Region III on the lefthand column, and then, the first column is the risk-informed program for surveillance frequency control. So, of course, with respect to tech specs, tech specs used to have very specific surveillance frequencies for systems and components covered in tech specs. Licensees can apply for and be granted this Surveillance Frequency Control Program to take those specific frequencies out from the tech specs and be controlled by a program.

The program itself is covered by tech specs in the admin section of tech specs. And so, you can see from this chart that all of the licensees in Region III are implementing the Surveillance Frequency Control Program. And I can tell you that I understand that all the sites in all the regions are using the Surveillance Frequency Control Program. So, it's very popular.

The next column is 50.69. So, 50.69, of course, is a rule, a regulation, that allows for the risk-informed categorization of structures, systems, and components, and then, subsequent, alternate

treatment, instead of having the special treatment requirements apply. 50.69, you can see we have seven plants in the Region that have applied for, and have been granted, 50.69.

The next one, risk-informed completion item, is probably the one of most interest. When I looked at the agenda item risk-informed tech specs, this is really the first one that people go to. Risk-informed completion time allows licensees to extend the existing completion times in their tech specs. Common completion times could be 72 hours a system could be out of service, or seven days, or 14 days. The tech specs, then, get changed; for some tech specs, for some completion times, they can be extended, and those are specified in the tech specs.

So, again, a licensee needs to have a risk-informed completion time program that's covered under the admin portion of tech specs that allows them to do a risk evaluation and extend certain completion times up to a backstop of 30 days.

CHAIRMAN HALNON: Laura, this is Greg Halnon.

On that one, I guess the most popular one is the diesel maintenance and issues there with the risk-informed completion times. What's the longest

out-of-service diesel in the Region that you can recall?

MS. KOZAK: Well, what I recall from earlier this year, there was actually a diesel issue at one of the plants and there were some emergent issues. So, the RICT that they applied was approaching the backstop of the 30 days. That's the longest one I'm aware of.

And in that particular case, there even began some conversations about, are there regulatory processes to get even further relief? So, this was actually one of our challenges I was going to mention a little bit later. You know, confronted with that information would be, would the agency grant another license amendment to extend it further? Would we entertain NOEDs? There's no black-and-white answer to that.

If you look into our guidance documents, it says we would consider such things on a case-by-case basis, but the conversation that we were having in the Region was this would be first of a kind. So, again, we were sort of discussing it with Headquarters: You know, how would we look at that? Would we entertain that?

At the end of the day, the licensee

restored it within that 30-day backstop, which was the risk-informed completion time that they were working under. That's the longest one that I'm aware of.

CHAIRMAN HALNON: Is the Region involved in the extension beyond the normal typically seven days, or whatever the originally out-of-service time is? Or do you guys only get involved when it gets towards that backstop?

MS. KOZAK: No, on my next slide, I'm going to talk to you about how we use our inspection program to look at the implementation of risk-informed completion time. So, yes, we do get involved in many of them on a sampling basis. We use our inspection program.

CHAIRMAN HALNON: I'll wait. Thanks.

MS. KOZAK: Okay.

So, the next column is NFPA 805, which is alternate fire protection program requires a robust fire PRA. We have four plants in Region III that are under NFPA 805.

And then, just as an add-on, a couple of our plants have seismic PRAs that were performed as a result of Fukushima actions. Those PRAs were actually, at least portions of it, provided to the NRC for NRC reviews. We have two in this Region that have

done those seismic PRAs and that's Dresden and D.C. Cook.

So, then, just as an overview, you know, the Surveillance Frequency Control Program is being used widely. 50.69 implementation has been rather slow. Risk-informed completion time is ramping up, and there's interest in that because of the operational flexibilities. NFPA 805, of course, is in use at the four sites, but we don't hear any indications of other utilities transitioning to 805. So, that's just an overview of some of sort of these important risk-informed programs.

MEMBER DIMITRIJEVIC: Laura, this is Vesna Dimitrijevic.

My question for you is, you know, when you use this risk-informed, the intervals, what is your basic PRA? Does it involve both fire and seismic? I mean, is it a complete PRA that you use when you monitor, you know, how long you can keep equipment out?

MS. KOZAK: Right. So, the PRAs that are required, the scope of the PRAs that are required varies for these programs, with the risk-informed completion time really requiring the most robust PRA. And it gets the most scrutiny in Headquarters, as they

are reviewing the license amendment.

For example, risk-informed completion time does require a fire PRA, and that fire PRA quantification must be part of the calculation of the risk-informed completion time.

The scope of the PRAs are somewhat different for the other programs, a bit lesser -- it depends on how much the PRA is actually used for the risk-informed decision. And so, the risk-informed completion time, of course, heavily relies on the quantitative evaluation. So, that tends to have sort of the strictest PRA quality requirements when Headquarters is doing the review of the license amendments.

MEMBER DIMITRIJEVIC: So, do you use a risk monitor for that, for those decisions?

MS. KOZAK: Well, the licensees all have an online risk tool that they have long been using for the Maintenance Rule (a)(4) requirements. And risk-informed completion time has really required upgrade of those licensee tools. So, yes, they have quite good tools to perform those risk evaluations. And in our inspection program, we do our best to become familiar with the licensee's tools, the license's application of those tools.

MEMBER DIMITRIJEVIC: Okay. Thanks.

I will have more questions if you bring 50.69 later, just to see where you are. As I understood, you submit it and you get approval, but, usually, that just has an example of a couple of systems. But I assume you didn't apply 50.69 across the plant. So, you know, I saw on some of your slides you use it in maintenance, but I will ask you later.

Thanks. Thanks.

MS. KOZAK: Yes, I'm going to talk a little bit on 50.69 in the next couple of slides as well.

So, are there any other questions on this slide? Otherwise, I'll go to the next slide.

MEMBER KIRCHNER: Laura, this is Walt Kirchner. Just a quick question on this overview slide.

When you have a box checked with a "Y" there, yes, that they've completed, is this selectively applied to the tech specs or is this like a blanket application to tech specs? In other words, in each of these areas, does it apply for all equipment or selected equipment, and so on?

MS. KOZAK: It's selected equipment. So, when a licensee applies and submits a license

amendment, they will -- for example, risk-informed completion time -- they will specify which particular tech spec completion times it applies to. And it does not apply to every tech spec in the tech specs. So, it's not global.

MEMBER KIRCHNER: Thank you.

MS. KOZAK: Okay. Next slide, please.

So, I wanted to talk about our experience with our inspections and our oversight of the implementation of these risk-informed initiatives.

So, first, I want to talk about baseline inspections. The baseline inspection program is the program every plant in the country, no matter of their performance, gets the baseline inspection program, which has a variety of inspection procedures.

What I've tried to highlight here -- and I'll go through in a little bit of detail -- how we use this inspection procedures to look at the implementation of the risk-informed programs and tech spec initiatives that I showed on the previous slide.

So, the first line item there is an inspection procedure that's titled, "Maintenance Risk Assessment and Emergent Work." This has long been part of the baseline inspection program prior to risk-informed completion time. And it was intended to look

at licensees' control of online maintenance via the Maintenance Rule 50.65(a)(4), where licensees are required to assess and manage risk.

So, this inspection procedure was updated to better address some of the newer environments of risk-informed completion time.

I'm sorry, was there a question?

(No audible response.)

Okay. So, anyway, the techniques that licensees use to implement risk-informed completion time build on and are complementary to the existing techniques that licensees had for Maintenance Rule 50.65(a)(4) assessments. But they really have advanced, significant advancements in the software, in the requirements that must be done and must be considered under the risk-informed completion time.

So, we built into our inspection procedure additional guidance for what our inspectors should look for if a license is implementing RICT. We are familiar with licensee software, as I mentioned. We look at what is the scope of the impact of the maintenance; what's out of service. Has that been properly translated to the licensee's risk models?

Some of our inspectors are very familiar with the software. They could actually try to

reproduce it themselves.

We look at, then, what's required in terms of common cause assessment in this evaluation. We look at risk management actions that are required. We look at the licensee's tracking. Licensees are required, as part of the performance monitoring aspect of all risk-informed license amendments. We look at how the licensee is tracking the cumulative risk that is incurred as a result of using risk-informed completion times. So, a lot of this guidance has been updated to our procedure, and these are the types of things our inspectors would focus on in looking at the application of risk-informed completion time.

Regarding our surveillance testing inspection procedure, it provides the inspector guidance to look at a variety of aspects associated with surveillance testing: observing surveillance testing, reviewing the adequacy of the procedure, reviewing the results.

As the Surveillance Frequency Control Program came into existence, this particular procedure was changed to provide an appendix that is optional. So, it's not required for our inspectors to look at this, but it's optional for our inspectors to pick up any type of evaluation of surveillance

frequency changes and review it under the inspection guidance.

Fire protection. We have a variety of fire protection inspections in the baseline inspection program. From a very detailed triennial inspection, where, for example, under 805, that team would look at changes that licensees are allowed to make under their fire protection program using risk insights. So, that's one of the powerful pieces of NFPA 805, that it gives licensees authority to make some changes. So, our team would be looking at those changes and looking at the application of the fire PRA to make those changes.

DR. BLEY: Laura, this is Dennis Bley.

Can you give us any examples of those that have happened, say, more recently?

MS. KOZAK: So, I don't have a good example in my head of a recent change to the fire protection inspection program. But I will reach out, if there's any inspectors online that might have encountered that, I would invite them to speak up and answer this question, if they're available.

(No audible response.)

DR. BLEY: It doesn't sound like it.

MS. KOZAK: It doesn't like it.

DR. BLEY: Thank you, though.

MS. KOZAK: You know, I'll take a lookup on that in the interim here and get back to you about some examples.

DR. BLEY: Okay. I'd appreciate it. I just haven't seen the kind of things people have been coming in for in that area.

MS. KOZAK: Another application of our fire protection inspection, our Resident Inspectors do a variety of fire protection inspection walkdowns to look at the standby readiness of fire protection systems, detection systems, suppression systems; to look for unapproved transient combustibles, fire initiator-type concerns.

And so, we use this fire protection walkdown inspection in conjunction with the application of risk-informed completion times. So, when a licensee enters a RICT, the evaluation that they do for the configuration they're going to be in also provides information about what other equipment; what other operator actions; what fire areas are important to the risk when the plant is in that configuration. So, we use that information to apply our inspection resources to choose in that configuration that let's do our fire protection

walkdown to make sure that those fire areas that are of particular significance to that configuration are in the appropriate condition.

Our Maintenance Rule inspections, again, it's kind of a broad inspection about the effectiveness of maintenance, the licensee's tracking of the effectiveness under the Maintenance Rule. This can be used in conjunction both with surveillance testing and with risk-informed completion time -- all of which are programs that might identify failed equipment or might be addressing/correcting failed equipment. So, our Maintenance Rule inspection can allow us to back up and have sort of an assessment overall of how that equipment is performing, given the implementation of these programs.

Equipment alignment is an inspection procedure that we use to select a certain system or train of a system and do a very detailed walkdown using licensee plant procedures, P&IDs, again, to ensure that that system, that train, is in appropriate standby readiness.

Again, the use of this during risk-informed completion time is particularly important because we know the plant is in a configuration with equipment out of service. The risk profile of the

plant, if you will, has changed, highlighting or elevating certain systems or trains in importance. And so, we can apply this particular equipment alignment inspection at that time to focus on that particular system in that configuration.

And then, plant modifications. We have a procedure to look at plant modifications. Plant modifications might be performed because of 50.69 and implementing alternate treatment. So, again, even with alternate treatment under 50.69, even though some of the quality requirements are no longer there, the system, the component, still has to meet all of its functional requirements.

So, it's a perfect opportunity, if there's going to be alternate treatment, for us to use our plant modifications inspection sample to look at that alternate treatment. So, that's one way we can use plant mods to look at some of these risk-informed initiatives.

So, what I've tried to demonstrate here is how we use the existing baseline inspection program to look at the implementation of some of these risk-informed initiatives.

I will say, too, the baseline inspection program, it continues to evolve. So, I, for one, have

been on some working groups, and that continue to this day: how do we need to update our baseline inspection program to better look at some of these initiatives, especially as they're growing in their use? So, we're always open to feedback forms. We're still working on better guidance for our inspectors.

CHAIRMAN HALNON: Hey, Laura -- and you might be covering this later in the ROP stuff -- but the new engineering inspection regime that's coming down the pike, do you see any huge differences in the way you'll be using your skills in helping the engineering inspection folks focus-in on the right areas to look at?

MS. KOZAK: I don't see anything new. I will have to say that I have to do some reviews of those procedures. I haven't looked at them in quite some time.

But our intention is to increase our use of risk information, to increase the interaction between, for example, the SRAs and the teams that are implementing these inspections. So, we hope to go in the right direction to increase, not go backwards.

CHAIRMAN HALNON: Is two analysts a region, is that enough? I mean, it sounds like you've got a lot on your plate.

MS. KOZAK: We do have a lot on our plate. And we do the best we can. Right now, to be honest, we actually have four in Region III because we have two in training. So, right now, we have a pretty good staff and it's working out pretty well.

CHAIRMAN HALNON: Okay. Yes. Well, I know the sites have four or five people sometimes trained up as an analyst, and I know they gang up on you sometimes.

MS. KOZAK: We also have a strong community of, as I mentioned, two SRAs in each of the regions, two SRAs in Headquarters, along with a number of just Risk Analysts, not particularly SRAs, but Risk Analysts in Headquarters in Research, and we have our folks at Idaho National Labs.

So, we work well as a community to support each other. And if it so happens that a lot of stuff is coming in at the same time, we have absolutely reached out to others to bring them in to help us out.

CHAIRMAN HALNON: Okay. Thanks.

MS. KOZAK: So, then, I wanted to mention this last bullet. Beyond the baseline inspections that we have, we have a category of inspections called special and infrequently performed inspections.

And there is a specific inspection

associated with 50.69. So, this is a team inspection that is intended to be implemented after a licensee gets their license amendment for 50.69; they've done some categorization of systems, and they've implemented some alternate treatment. The idea is the team will go out at that point, after some period of implementation, and perform a rather detailed inspection.

We have not yet implemented this particular inspection in Region III. It is scheduled to be performed for two of our sites next year.

A couple of the other regions have implemented this procedure. I know I had the opportunity a couple of years ago to go and observe one in Region I for a week. It was very informative. Again, our community has tried to work together to improve procedures, educate people, bring people up-to-speed, so that we are ready when we need to do this inspection in our Region.

All right. Next slide.

MEMBER DIMITRIJEVIC: Okay. See, I probably will ask you this at this moment, Laura. So, for this 50.69, the special inspections, are those for the systems which are safety-significant, but non-safety? Is that where that special inspections come

in? And in which category from 50.69 is the inspection coming?

MS. KOZAK: So, what you are talking about is risk-free components.

MEMBER DIMITRIJEVIC: Right.

MS. KOZAK: Right. In 50.69, there's a category -- well, it's Risk 1, 2, 3, 4. And Risk 3 are those components that were previously known to be safety-related, continue to be safety-related. But through the classification system, they are put into Risk 3, which is low safety significance. And then, they can receive alternate treatment.

MEMBER DIMITRIJEVIC: Right.

MS. KOZAK: So, yes. Yes, Risk 3 --

MEMBER DIMITRIJEVIC: That's Risk 3, because that's what I was wondering, is this Risk 3 or Risk 2 category? You know, they're non-safety, but they have been classified as risk-significant, and now, they need the special attention. So, I wasn't sure, is this Risk 2 or Risk 3 category?

MS. KOZAK: We would look at both in that special -- in that procedure, we would look at both. If a system has been classified and there are Risk 2 components -- and I will tell you, from what I've seen, that population is pretty small. But Risk 2

would be components typically classified as non-safety-related, but with the risk-informed categorization to have high safety-significance.

MEMBER DIMITRIJEVIC: Right. That's a very small category, you're right.

MS. KOZAK: Yes.

MEMBER DIMITRIJEVIC: That's a usually very small category.

MS. KOZAK: It's a small category, but we pay attention to that because, per the rule, licensees are supposed to review their treatment of those components and --

MEMBER DIMITRIJEVIC: Right.

MS. KOZAK: -- make a conscious decision as to whether they need to do something more for those components.

So, yes, those components are subject to the inspection, just like Risk 3 components are: have they been classified properly? Is the alternate treatment acceptable? All of that is within the scope of the inspection that I just described on the previous slide.

MEMBER DIMITRIJEVIC: Okay. Okay. Well, thanks. Thank you.

MS. KOZAK: Sure.

So, just to share some of our Region III experience and observations in doing all of these inspections.

The first thing I would say is we have not identified any significant problems or significant safety issues with implementation of these programs. We do think that, overall, it is going pretty well.

I will say it's a learning process. It's a learning for the utilities. It's a learning for folks in the NRC. You know, the concept of safety-related and non-safety-related has been around for a very long time, and people are very used to that paradigm. Taking it to a different paradigm, where safety-related components can be treated differently is something that people, to be honest, are uncomfortable with. And so, we have to get used to this process.

The same with risk-informed completion time. Again, the completion times that have long existed in tech specs, people are very comfortable with. The idea of extending them for what feels like a lengthy period of time, up to the backstop of 30 days, again, something everybody needs to get used to -- utilities, ops folks, NRC folks.

DR. BLEY: Laura, it's Dennis Bley.

I'm a little surprised by this because that it's still so new. The approach has been available and around for quite a while.

But can you say anything about what NRC is doing to make sure we're looking at this the same way across all the regions?

MS. KOZAK: I can. There has been a significant amount of training, training modules; a significant amount of knowledge management activities. We have weekly knowledge management sessions. These programs have often been discussed under those programs.

We have done some Region-III-specific activities. We call them tabletop exercises. Plants, you know, when they were about to get risk-informed completion time amendments, we sat down in small groups with our Resident Inspectors and talked through what the process looks like; what we should be focused on. So, the agency, in my opinion, is doing quite a bit to advance folks in this.

DR. BLEY: Okay. Thanks.

CHAIRMAN HALNON: So, NEI and NRC have done workshops for the risk-informed side of it. Have there been any recent workshops lately coming out of the pandemic to reset the industry and the NRC on the

same page relative to these types of risk-informed applications?

MS. KOZAK: I am not aware of any recent workshops.

CHAIRMAN HALNON: Okay.

MS. KOZAK: There certainly is quite a bit of activity always between Headquarters, NRR, and industry, NEI. The regions are not always involved in that. And so, then, it becomes a matter of Headquarters, NRR, you know, distributing that information to the inspection program, to the inspectors. And it's something that we're continuing working on.

CHAIRMAN HALNON: I know that the RUGs held some workshops in the past decade or so.

Julio, Billy, now you might have been part of those, too. Do you all remember any of those, when the last one was held? Probably in the '15 timeframe, I would imagine. Okay.

I mean, that's another avenue. Maybe if you find some deviation in understanding in how these things are being applied, to Dennis' question, that's one way that we get kind of consistency across the board, when the NRUG and the RUGs get involved.

Okay. Go ahead, Laura. I'm sorry.

MEMBER BIER: Hi. I have another question. This is Vicki Bier. Can you hear me okay?

MS. KOZAK: Yes.

MEMBER BIER: Okay. I just wanted to clarify, what are the actual activities that go on in an inspection? Because in kind of the plain English language, it would mean like going to look at the equipment, but I assume you're also looking at performance data and any new analyses that have been done, et cetera. Can you talk through a little bit of what that process actually entails?

MS. KOZAK: Sure. You're absolutely right. I mean, we often focus on the equipment. That's a very important part of the inspection program.

But we also focus on the analyses that go into some of these risk-informed programs. For example, the categorization of a system for 50.69 is a very involved document, hundreds of pages. Our inspectors would obtain that document and they would review it. In all likelihood, they would also consult with an SRA to review that as well.

An important part of a number of these risk-informed programs at the site involves the use of an integrated decisionmaking panel. So, this is why,

one of the reasons why, these programs are risk-informed and not risk-based.

The technical information that's developed to make such decisions, which includes PRA information, but is not always exclusive to PRA information, is developed in a package and presented to an integrated decisionmaking panel at the plant. That panel, typically, can consist of very knowledgeable individuals in operations, engineering, PRA, maintenance. And that panel will approve things like surveillance frequency changes, or they will approve the categorization document for 50.69.

So, an inspection activity, in addition to reviewing such documents, may attend those integrated decisionmaking panels to observe the interaction among the panel members. Are they asking the right questions? Are they holding the information? Do they feel the information is complete? Are there any questions there?

So, we are in the plant. We're reviewing documents. We're observing these decisionmaking activities. We're observing the application of the PRA for risk-informed completion time. Has the whole scope of what's out of service been properly translated to the licensee's tool for estimating the

risk-informed completion time? So, there's just a variety of inspection activities, not just the plant walkdowns.

Did that answer the question?

MEMBER BIER: Yes. Thank you very much.

MS. KOZAK: So, again, you know, it's been a learning curve. It's still a learning curve. We're still all learning. We're still trying to reassess and update the inspection guidance and procedures. We're still trying to educate. We still have things to learn. But, so far, it seems to be working pretty well.

We have found that emergent RICT, risk-informed completion time, more challenging for the licensee, more challenging, you know, for us as well. Again, the plant has to consider the whole configuration of the plant over the period of time that they're planning to have a RICT. If they haven't planned for that in advance, you know, that can be difficult. So, we'll be there monitoring those challenges versus, if they have a planned RICT activity, three months in the future we're going to implement RICT for a specific modification, then they have the time available to do all those. So, again, we see emergent RICT consent a little bit more

challenging. So, we're focused there a little bit more.

One of the items that comes up a lot in the application of the risk tool for either an (a)(4) or for risk-informed completion time are cases where components might be considered inoperable, but PRA functional or available. So, we spend a lot of time discussing that with the licensee, asking questions, asking the questions internally. Is that the right decision? Is that the right categorization of that piece of equipment? Because that can impact the outcome of the risk evaluation, which, of course, could impact the length of the allowed RICT. So, that is one area where we continue to spend a lot of time, talk internally. What does that mean? It's just some of our observations.

CHAIRMAN HALNON: Laura, that situation, when do those discussions take place? At least early on, you know, that was one of the conditions that the licensee would argue, I guess, with the NRC, but it was typically towards the back end of the process, where it was indicated it could be a greater than Green finding. And, you know, the real deep engagement started with those types of discussions on completion time, or I mean out-of-service time, and,

you know, the intricacies of the PRA and what assumptions go into developing those results.

Have those conversations moved up in the process at all to help get to the endpoint quicker through -- what do we call those matrix? -- risk -- they lost me.

DR. BLEY: The Action Matrix?

CHAIRMAN HALNON: Yes, well, the Action Matrix, but the procedures that develop the risk numbers. The name of them escaped me because I haven't had to argue with you for a while.

(Laughter.)

But I guess the question is, have those conversations moved up in the process, so that we get on the same page earlier?

MS. KOZAK: So, I think you're talking mostly about SDP right now.

CHAIRMAN HALNON: SDP, that's it.

MS. KOZAK: Yes. I will tell you, our goal in SDP, if we have a finding where we think equipment is non-functional or unavailable, and there's a risk increase and it's perhaps potentially greater than Green, our goal is to have those conversations as soon as possible, starting with inspection, as some type of performance deficiencies

developed.

Very early on in the process, if an inspector identifies a performance deficiency, one of the first things, as part of the inspection process, is: how is that performance deficiency related to a degraded condition in the plant? Is there a strong enough relationship? What is that degraded condition? Is the system -- was it non-functional or was it functional? If it was non-functional, was it recoverable? We strive to have those conversations as early as possible in the inspection process.

Now, the truth is sometimes they continue. And sometimes there are disagreements. And those get sorted out through various processes: inspection, preliminary significance, and then, sometimes it gets to a formal process where we have RICT conferences or we have information submitted on a docket. So, it just continues throughout, but we try to do it as early as possible.

CHAIRMAN HALNON: So, the timeline, what is the goal now? Is it still 120 days to get the final determination done?

MS. KOZAK: Well, there's a couple of different goals. The goal is 90 days from when we issue a preliminary significance to issuing a final

significance. But we've put in some additional metrics for other parts of the process, from the initial identification of an issue to final. We have a 255-day metric. That includes the inspection part of things. So, we have a couple of other internal metrics.

CHAIRMAN HALNON: And how are we doing on those? Are we, I guess --

MS. KOZAK: Not good. Not good.

MR. LARA: As an agency, we're not doing very well.

CHAIRMAN HALNON: Okay.

MR. LARA: And there's a lot of concerted effort working with -- this is Julio Lara -- with Headquarters, Division of Reactor Oversight, and what can we do differently to challenge ourselves to be more timely on the decisionmaking?

A large part of what impacts our ability to get these decisions made on time is, frankly, a lot of the conversation with the licensees where they seek to provide additional information, additional testing, additional research; modifying the existing PRA model, and that takes a lot of time in our effort to be open to such new information. That, ultimately, delays the process in a good-faith effort to reach a good

regulatory decision.

CHAIRMAN HALNON: Yes, I would expect many times the deficiency has been long-term corrected and --

MR. LARA: Yes.

CHAIRMAN HALNON: -- we're still going through a process looking back upwards of a year --

MR. LARA: Absolutely.

CHAIRMAN HALNON: -- chewing your resources and the site resources up, but there's no deficiency anymore. So, it's more of an enforcement issue than it is a safety issue at that point.

MR. LARA: In many ways, that has not changed in the last 22 years, since the incept of the ROP.

CHAIRMAN HALNON: Yes. Yes. I would hope that, as we get better and get the SPAR models updated and everything going forward, that we can concentrate on today's safety as opposed to the safety non-issue last year. So, okay.

MR. LARA: Yes.

CHAIRMAN HALNON: I'm off my soapbox. Go ahead, Laura.

MS. KOZAK: I'm not sure exactly where I left off, but I was talking about, again, risk-

informed completion time, the tech specs. We think that it is allowing that desired operational flexibility that it was intended for. It has reduced the need for NOEDs or other license amendments.

It's allowed significant modifications to plants without multiple LCO entries. In the past, you know, if there would happen to be a 72-hour LCO for a component that affected a dual-unit site, you know, now if they can extend that, they don't have to break the work up into multiple pieces, which would require multiple tagouts, multiple rearrangement of equipment, multiple switching activities -- all of which are opportunities for errors.

You know, the thought in time, being able to control this, was that this would be more efficient; might at the end of day reduce unavailability time, and then, reduce the opportunity for errors that could occur during some of these activities in taking systems into non-service. So, we do see that. We are seeing that.

And then, the last bullet here, I would just again mention -- I think I've touched on this before -- 50.69 implementation is a little bit different than we envisioned by the inspection program when the procedure was written. Our thought was that

the licensees got the license amendment. They would immediately categorize a number of systems and immediately pursue alternate treatment.

But what we found is it's not being implemented that way. It's more on a case-by-case basis or an on-demand-type basis, where a licensee sees the need to use alternate treatment. That will prompt the system categorization for that single activity.

And so, we've had to adjust our inspection program to use our baseline inspection procedures to look at that. We've had one alternate treatment in the Region. Again, what we hear from people is that this is quite a resource-intensive activity for the categorization, and folks aren't clear about the benefit of alternate treatment. And so, that's kind of the reasons behind why it's being implemented in this manner.

Okay. Next slide, please. I think this might be my last slide.

MEMBER KIRCHNER: Before you go on, could you just give a tangible example of that last bullet? Your slide, yes, on 50.69 implementation. So, was there any -- you say one alternate treatment observed. Could you just expand a little on that, your comments

that it seems different than envisioned. I mean, what did you envision and what is actually happening in the field, I guess is my question.

MS. KOZAK: So, I think we envisioned, and we wrote an inspection procedure, that thought licensees, when they got this amendment, they would go off and categorize many systems and begin widespread implementation of alternate treatment.

But what we've seen in practice is that is not the case. A utility might see the need for alternate treatment. In the case that we observed, it was a non-Code-type repair, that, yes, they could do under alternate treatment, but they did not fully classify the system.

So, the need for that alternate treatment came about, was going to be of benefit to them for their resource savings. So, that prompted a categorization at that time to support an identified alternate treatment.

So, what we see is, on an as-needed or case-by-case basis, the need for alternate treatment, licensees will apply this program, versus, hey, we have the license amendment; let's go forth and categorize a whole bunch of systems and begin looking at alternate treatment on a big scale.

Did that answer the question?

MEMBER KIRCHNER: Yes. Thank you.

I wouldn't expect a lot of recategorization of systems, actually, myself. But that's why I was asking, you know, for a specific example. I would think, going in, you would, basically, have a good baseline for your power plant and would not be making major changes of categorization of importance to safety, or whatever.

MS. KOZAK: And perhaps that was the utility perspective. And my comment here is to say that our inspection process was designed for something else really, versus building it into baseline inspection procedures where we could respond on this sort of as-needed basis. So, just perhaps a disconnect between the way we built our inspection program to address it versus maybe licensees always intended to use it that way. That just isn't how we built our inspection program.

MEMBER BIER: Walt, if I can interrupt for a brief sidebar, do you think the reason that people would not have recategorized a lot of equipment was because it was already categorized correctly before they did their PRA? That's not my experience with how PRAs turn out, but I just wanted to clarify.

MS. KOZAK: Right. So, what I kind of hear through conversations is it's not that they expect that there wouldn't be a difference in categorization. What I hear is it's about resources. A lot of resources to do categorization and not a lot of confidence that the alternate treatments are actually going to save on resources. So, "Is it really worth it?" is what I've kind of hear through conversations. We think utilities need to decide that it's worth it to them to apply it.

MEMBER DIMITRIJEVIC: If I can add, I mean, that's a general state in the industry. Maybe only one plant applies full scope then, you know, the 50.69. It's just like there is no alternative problems which had already developed that require an effort. If it comes to repair/replacement, there are no components. The industry is not ready for that change yet. So, that may change, though, in time, but the situation is that every plant which got 50.69 approved, to my knowledge now, only really selectively applies it. Nobody other than South Texas has applied that full scope, and that was very early application.

MS. KOZAK: Right. This is something where I think it definitely has the potential to grow, and we need to be prepared for that. Or when folks

figure out exactly how to use it to their benefit, it absolutely will grow.

So, going on to some hearings and inspections, just to talk about frequently used PRA tools, for us, we have our SPAR models that are developed and maintained by Idaho National Labs. SRAs use them frequently. Inspectors can also use them. We have developed a module, a simplified interface that inspectors can use the SPAR model, if they choose to.

There's a companion document with the complete SPAR model. It's called, "the PRIB," the Plant Risk Information e-Book. And it takes the risk insights out of the SPAR model and presents it in a simplified fashion. Gives things like pie charts of the various contributions of specific initiating events to the overall baseline risk, as calculated by the SPAR model. It will risk-rank systems and operator actions and provide importance measures for components.

We also have access to licensee risk information. So, for example, we have a large engineering team inspection that we conduct, although that's going to be changing in the future, called the Design Basis Assurance Inspection.

In preparation for that inspection, and a number of months in advance, we send a letter to the licensee requesting a variety of information, so we can prepare for our inspection. Part of that request list is some PRA information. We look at risk-ranking of components via enforced measures. We often request system notebooks. So, we use that information to select components, operator reactions, and we use that information to prep, so that we understand from a PRA perspective how that system is modeled in the PRA.

We also interface with licensee PRA staff. I can tell you that our Resident Inspectors develop relationships, get to know the PRA staff, just like they would any other folks at the site -- Ops, Maintenance, Engineering. So that they can reach out, ask questions, get information.

And I did not put a bullet on here, but, of course, the SRAs are a resource to everybody in the Region to help them understand risk information. I have participated on occasion with our inspectors in conversations with licensee PRA staff, so that I can help our inspectors understand what licensee PRA staff are telling them.

So, we have a lot of tools that we use frequently throughout the inspection program. So, on

the bottom there: how do we use this information? Well, first of all, we have to acknowledge that the baseline inspection program, when it was developed in the ROP, was intended to be risk-informed, the areas that we're going to look at.

So, we brought into play cornerstones in assessing performance via cornerstones. The three cornerstones that have some direct relationship to PRA are: initiating events, mitigating systems, and barrier integrity. And within those, we identify the various baseline inspection procedures that are intended to focus on those areas and highlight any performance issues with initiating events, mitigating systems, and barriers.

And the baseline inspection program, of course, always continues to evolve -- not fundamental changes, but we try to incorporate additional risk insights wherever possible, changing the program.

Inspector selection of specific inspection samples. Of course, we do review every licensee activity, every licensee document. We select things. The inspection program is a sampling program. So, we use our risk information to decide which activities to select.

Did somebody have a question?

(No audible response.)

Okay. And then, of course, risk should inform our level of effort and our focus areas, once we do select those samples.

It came up just a minute ago. We use PRA heavily to assess the significance of finding, the risk-significance determination process, and then, we also use PRA to evaluate the need for reactive inspections.

Reactive inspections are in response to events at plants, significant events, complex events. We do an evaluation as to whether we need to do some inspection above and beyond the baseline. That's covered under our Management Directive 8.3. That's the reference there.

And we use risk to help us decide, you know, do we need to do a special inspection in response to this complex event? Do we need to do the next level up in terms of significance and augmented inspection team? And then, the final level of inspections for very, very significant events is the incident investigation team.

CHAIRMAN HALNON: Hey, Laura, what's your assessment of how well the SPAR models that you have, and how up-to-date they are, reflect the actual risk

at the site?

MS. KOZAK: I believe the SPAR models are up-to-date and they are an excellent tool. We have great confidence in the SPAR models. They are not built to the level of detail of licensee PRA models, and those that are using them understand those limitations. And when we use our SPAR models, we interact with licensees because we are aware of that.

We also have significant, excellent on-call assistance from Idaho National Labs. So, at any time that we need to use the SPAR model for a specific activity -- say 8.3 or the SMP -- we are almost immediately on the phone with Idaho to make sure the model we're using is the most up-to-date. And if we need to update it immediately, Idaho staff works with us to get that turned around in a matter of days. So, I am a huge supporter of the SPAR models. I don't think the NRC could do its independent activities without them.

CHAIRMAN HALNON: Thank you. That's good to hear.

MEMBER BIER: Laura, another question. This is Vicki Bier again.

It sounds like you're a big believer in risk-informed applications. If you look across the

staff in the Region, do you feel like there's a high level of acceptance in general or some people that are still kind of in a learning curve of getting used to the idea of risk-informed?

MS. KOZAK: I'm in the second camp there. I think we have a fair amount of people, not only in the Region but from the agency, that there's a fair amount of learning. You know, there's a fair amount of kind of a negative attitude, if you will, that all we're doing with risk is making things less significant or implying we don't need requirements. And I could tell you my personal experience is that nothing could be farther from the truth. We're trying to use it to make the best decisions that we can. So, I do think that we have a fair amount of work to do to bring the whole agency along.

I think I have one more slide. This is part of the agenda, assessment of licensing capabilities. I think I might be going over time. So, I'll try to be kind of quick.

The first thing I wanted to say is the ROP doesn't directly inspect or assess licensing PRAs or PRA capabilities. Now that doesn't mean -- through all of our interaction, hopefully, you can tell from this discussion that, we have awareness of licensees'

PRAs; what's in them; how they use them; the quality of them.

But we have no specific inspection procedure that says, "Go look at licensee PRA capabilities." I will tell you that there is an effort going right now, being led out of Headquarters, should we incorporate into the baseline inspection program something regarding PRA configuration control going forward?

So, we all know that when these license amendments are approved, utilities come to us; they have built PRAs to standards. They've done PRA reviews. They've followed processes to close any type of PRA peer-review open items. They come for a license amendment, which gets reviewed by Headquarters, the audits, RAIs. And the PRA is determined to be acceptable for use at the time of licensing.

But, for the rest of the time that the plant is going to be using this PRA to make risk-informed decisions, which they're, arguably, growing in number, what does that PRA configuration control look like? How do we ensure the continued technical adequacy of PRAs? What should be the oversight footprint in that area? Those are the questions that

we're asking ourselves right now.

And so, there's been a series of tabletops led out of Headquarters, working with NEI and working with volunteer utilities, to visit the sites; to learn more about how the PRA configuration control programs work. Again, I know some things about them because of our interactions with licensees, but we never have a specific procedure that says, "Go out and look at this."

So, hopefully, by the end of the year, the tabletop exercises will be done. There will be some options for how to consider PRA configuration control in the baseline inspection program. And we'll fill in what we knew to be sort of a gap right now in terms of ensuring that continued PRA acceptability for the life of the plant.

I will say, also, we've had some observation findings developed during inspections about licensee capabilities; you know, kind of knowledge of the tools; understanding of certain things that are in the PRAs. A couple of times we see via the corrective action program a licensee's identified an issue with their PRA.

In one case, a licensee in their corrective action program identified an issue. They

suspended their risk-informed completion time program until they resolved that issue. That's exactly what we would expect licensees to do. That's in accordance with the guidance.

So, again, from a problem identification/resolution, we would monitor the licensee's corrective actions and the fact that they would put that on hold until they resolved it to use the risk-informed completion time program again.

So, just a couple of examples of the types of things that we observe; we monitor; we think, in general, is going pretty well.

Regarding licensing capabilities, I just put down here all of our licensees have internal events, internal flood PRA models. They all have online risk model software for either their (a)(4) assessments, or if they have risk-informed completion time, those have typically been upgraded. PARAGON and Phoenix are a couple of the names of the online risk-monitor tools that licensees use. Our inspectors, like I mentioned, become familiar with those.

All licensees have a method for shutdown risk assessment and management. It's a qualitative approach, consistent with industry guidance from the '90s, where certain shutdown key safety functions are

identified. Licensees, through their planning of the outage, will ensure that they have a sufficient amount of equipment. It might be a certain point-based system that they use. They might assign, you know, a color then, like color-coded activities: Yellow for reactivity management or Yellow for inventory control. So, licensees do a lot of work in the area of shutdown risk.

We, through our refueling outage procedure, also take a very detailed look at those plans, and we monitor the licensee's implementation of the plans throughout the outage.

Also, in interactions, I would say licensees have very well-trained PRA staff knowledgeable in implementing these tools.

So, one or area or some areas where we see some variability, the different sizes of PRA staffs across the Region and the utilities. Some have a few folks. Some have one person onsite that's sort of the PRA site person, but they have a very strong presence in their corporate office.

We see variability in external event models. Some have fire PRAs because they're required to. Others don't have anything; haven't done anything since the IEEE days. Some have perhaps a draft fire

PRA they began working on, but never finalized.

And the fire PRA capabilities across the Region, I think at the licensee staff there's some variability. Fire PRAs are very complex, and most utilities have vendors work with them on that. So, some folks get that back from the vendor and there hasn't been a lot of involvement. They're not as familiar with what's in that PRA as maybe they should be. There's a learning curve there.

Other fire PRA staffs stay up-to-date on all the work going into advanced fire PRA methods, which is quite a bit coming out of our Office of Research. And even though they might have a vendor involved, they are very knowledgeable of fire PRA techniques and what's in their fire PRA. So, again, some variation in how the PRA community is working on these items.

And that's all I had. I'm open to any questions that people might have.

MEMBER KIRCHNER: Laura, this is Walt Kirchner again.

Your presentation here, when you were speaking about configuration control of the PRA, struck me as important, especially looking ahead to 10 CFR 53, where the PRA becomes, essentially, the

baseline approach to the licensing, potential licensing, of new and advanced plants. Are your observations on this particular topic, is that shared with staff back in Headquarters who are working on 10 CFR 53?

MS. KOZAK: That's a very good question. I don't know the answer to that, but I will take that back to our working group and make sure that we have that conversation. I know they have not been part of the working group that we're working on for the ROP, but that certainly sounds like that's important. So, I'll take that back.

CHAIRMAN HALNON: Any other questions from members or consultants?

(No audible response.)

Laura, thank you very much. That was extremely informative and well done. Appreciate it.

MS. KOZAK: Thank you.

CHAIRMAN HALNON: Okay. So next is Julio.

MR. LARA: Yes, sir. Good morning.

I will cover the material that was requested that's presented in the slides. However, I will also make sure we leave some time to provide additional information on the Quad Cities ERV issue that's currently under consideration, and I'll give a

warning to Chris Hunt and Laura that I may rely upon you to help me fill in some of the gaps in terms of how we reach our assessment.

So, in terms of program changes within the ROP, there's a few items that I wanted to highlight this morning for your awareness.

One of the changes that came about in 2015 was a change to the column definition for column 3 of our Action Matrix. You may recall that the Action Matrix is our way to assess and document our assessment of licensee performance, column 1 being defined as the licensee response column. And as licensees move across the columns from 1 to 5, it reflects a degrading performance, based upon our assessment.

And the primary inputs to that Action Matrix are performance indicators and a significance determination of findings, the color of findings, if you will. And in this particular case, column 3 was defined as a licensee having degraded performance in a cornerstone, based upon two White inputs. It could be a performance indicator or a finding.

And the NRC and industry were concerned and thinking about whether or not two White findings truly reflected, quote, "degraded performance on the

part of a licensee." So, a study was begun to consider whether that was an appropriate classification.

And we also recognized that there was a lot of resources -- time, frankly, money -- on the licensee's part trying to push back, as we call it occasionally, on these White findings, the thought being they did not want to move to column 3. So, they would spend time and resources to preclude or not have to get a White finding at the end. And the NRC, likewise, was spending a lot of resources.

So, after a careful study and feedback from the industry and the public, the agency did make a change to that definition in column 3. So now, today, three White inputs are required to move a licensee to column 3.

We have performed an effectiveness review, and Laura Kozak was part of that effectiveness review. We did not see a change in our focus on our part in terms of safety if a plant was, quote, "delayed" by moving to column 3, based upon the changing inputs. So, we didn't see that at all.

I will also note, as I mentioned earlier, we also have not seen a lessening of licensee pushback. So, we still get quite a bit of pushback on

the White issues. So, we're still spending a lot of time there.

CHAIRMAN HALNON: So, that didn't work?

(Laughter.)

MR. LARA: That didn't work. Yes, that didn't quite work.

CHAIRMAN HALNON: Well, I mean, that was one of the objectives that the industry put forward, was that the executives would stop, or at least lessen, the amount of resource put into that.

MR. LARA: Yes.

CHAIRMAN HALNON: Although I guess this is more of "a feel" thing. Does it feel better or does it feel like -- I mean, are less resources going into it, less frequently, or, you know --

MR. LARA: It's still the same.

CHAIRMAN HALNON: Still the same?

MR. LARA: There's a lot of time, a lot of money on the licensee's part, a lot of our time. Hence, a big, as I said earlier, reason why we are not able, in my estimation, we are not able --

CHAIRMAN HALNON: And that adds into the whole SDP discussion we had earlier about the metrics, and whatnot.

MR. LARA: That's correct, yes.

CHAIRMAN HALNON: So, that's still an area to work with industry on?

MR. LARA: Definitely.

CHAIRMAN HALNON: Okay.

MR. LARA: I do recall one case. We were considering a preliminary Yellow finding at a particular site, and after receiving further information, we adjusted our program or our assessment, and we were concluding that it was going to be White instead of Yellow. And the licensee took it, frankly. They said, "We're not going to do any more research, any more testing. We'll take the White." So, in that case perhaps a success, but, by and large, the amount of effort, pushback, in my estimation has not changed over the last 10 years, if at all.

The second bullet I have on here is program change, very low safety significance issue resolution. We refer to it as B-lister. You may hear about B-lister.

B-lister was an effort to address instances/examples where inspectors identified potential non-compliances, potential safety issues, but the licensing basis wasn't clear. You would take a look at the FSAR, the licensing documents, and it

was not clear as to whether or not we, the agency, approved the condition at hand or whether the licensee was not meeting all the licensing basis requirements.

It's difficult to look at it 40-50 years after a facility was licensed and try to assert or ascertain what was in the mindset of the reviewer that approved the condition, the design, how the plant was built. And we struggled with that.

So, we, first, before we could make a determination of whether a licensee was meeting its licensing basis, we needed to answer that question first, before we determined significance. So, we were spending a lot of time working with NRR for very, arguably, very low safety-significant issues. So, why are we spending all that time?

So, the B-lister was designed to address that particular case. That is, if the licensing basis is not clear, and yet, we know it's low risk-significance, can we provide an off-ramp to the inspectors to document it in an inspection report that the issue may not reach full resolution in terms of answering the question, Is this issue within the licensing basis or not? But at least we can move on. Let's close it; document it low risk; lack of clarity in the licensing basis, and then, we continue forward.

So, that's a good-faith effort on our part to really focus on the more safety-significant issues, although this came about in 2019. So, when you look at the numbers, nonetheless, across all regions, there's 14 examples documented in all the regions. Region II has two. So, we need to do more in that area in its use and understanding are there any barriers to preclude that perhaps in the inspectors' minds they're not willing to go there a little bit more.

MEMBER KIRCHNER: So, Julio, can you make that tangible for us? What's a good example? Well, not a "good example." That's a poor choice of words. But what's an example --

CHAIRMAN HALNON: One of the two examples?

(Laughter.)

MR. LARA: Well, the one I recall is one facility in a tech spec had a particular -- I may have to rely upon Laura to help me a little bit. There was a tech spec in the basis that talked about a barrier to -- Laura, do you recall we had to do it on a fan and whether a particular breaking system on a fan was actually a barrier? And if it could be defined as a barrier -- I'm struggling with the details. There have only been two, and this was probably about right

at the onset of that example. So, I apologize, I don't have all the details to make a meaningful --

CHAIRMAN HALNON: So, did you rely on the corrective action program onsite to fix the issue? I mean, you can't leave a non-compliance.

MR. LARA: That's correct. The issue still is resolved. And by and large, again, two examples. The licensees are interested in fixing the issue at hand. The challenge is really on our side, that feeling that says, Am I walking away from something that's potentially significant, notwithstanding, from a risk perspective, we all agree it is a very low risk-significant issue?

Go ahead.

MS. KOZAK: It was just some of the issues in other regions have been related to tornado and tornado missile issues that have been brought up. We've used the very low safety-significant issue resolution to close those issues out. It's not clear that it's in the licensing basis.

This is Laura Kozak.

MR. LARA: Thanks, Laura.

We need to continue to do more and focus on this a little bit more as a tool for our inspectors.

The third item, significant changes, Laura briefed us on the approval of our risk-informed initiatives. On our side, we do need to work a lot more in developing what we refer to as "risk thinkers."

For many years, we've thought about the inspectors being engineering inspectors, design inspectors, and then, handing off the issue to the risk analysts, reactor analysts, to do the risk thinking for us. We want to remove that barrier, that mindset. We want everyone to be risk-informed in how they not only plan for the inspection, but also the conduct of the inspection and adjustments, as well as on the evaluation of the significance of any issue. So, we're doing a lot of work trying to remove those lines and create/develop "risk thinkers," advance their thinking. So, we're doing a lot of work in that area.

Lastly, ROP implementation. And Mohammed will talk about this a little bit down the road. But, from 2015 onward, we notice a significant change in the number of inspection findings across the agency. As I recall, back at that time, we were probably 800, close to 900, findings across all the regions, and we noted a significant drop.

So, we undertook with the program office an effort to understand why; what is the cause for the change, the reduction? And ultimately, we concluded it is primarily attributed to three major areas?

One, trying to achieve regional consistency, regional consistency with respect to the evaluation of findings of performance deficiencies. Are they minor or are they more than minor? So, we provided additional guidance and examples in that area.

We also increased our efforts to ensure that the Branch Chiefs, the supervisors, appropriately reviewed these findings to ensure that there was no backfit implications in the assessment.

And we also focused on providing further guidance as to identification credit. Is this a licensee-identified deficiency or is it an NRC-identified deficiency? Or is it self-revealing? And what are those circumstances?

So, in ROP consistency, that I think was a big contributor. We, obviously, also had feedback from the industry, assertions/claims that we were implementing backfits on the licensees. Backfits are the imposition of new requirements on a licensee without going through the formal process.

So, on the backfit, that's the other most significant change. The Commission took a significant effort to revise/revamp the backfit guidance for the NRC staff. It more prominently brought risk into the conversation in terms of assessing whether or not the backfit, the condition that we're proposing, meets the adequate protection standards, and if we are proposing a backfit, we have more clear thresholds to ensure that there's appropriate controls and we're not unnecessarily burdening the licensees with unapproved backfits.

CHAIRMAN HALNON: So, Julio, I would like to get your reaction to maybe two other bullets that I would put on there.

One of them is these plants -- all but one, I think, in your Region -- are licensed and in their extended period of operation. So, after 40-plus years of being inspected, could you see that as -- I mean, maybe not a rapid dropoff, but, certainly, a lot of the equipment issues and design basis questions, and those types of things, should have been resolved by now, don't you think?

MR. LARA: We're still coming up with issues, but I agree, I think, by now, 40-50 years, a lot of the issues have been scrubbed, looked at

several times.

I was just briefed on an example at a site yesterday that, to me, is very interesting; that, apparently, has not been reviewed over many times. But, up until 2015, we didn't see that change. The numbers have gone up, continued going up, and it was just a straight drop that told us something else is occurring here.

And that's why the effort was to identify what were those causes. Agency focus on minor, more than minor? Agency focus on backfit? Agency focus on consistency across the regions? So, we began doing, for a particular inspection, cross-regional panels to ensure that one region was not pursuing enforcement in one area and another region was not.

CHAIRMAN HALNON: Okay. The second bullet I would ask about is licensee performance. I mean, again, after 40 or 50 years, even though that there is a changeover in staff, the procedures are much more mature, and the documentation, the PRAs, other things are much more mature. Would you put that on a list as well, maybe not as prominent as these, but --

MR. LARA: I think licensing performance has improved, and we've noted that. The Commission, the assessment process, has noted that, I believe,

over the years. The licensees, also, are wrestling with the same issues that we are: turnover, an aging workforce, knowledge transfer/knowledge management.

You look at operators from 20, 30, 40 years ago who at some sites saw many reactor trips while on duty. Nowadays, there's some sites that hardly have any trips. So, their experience is really in the simulator, and the like. And equipment is more reliable. You look at the MSPIs that we track. That will tell us that. So, engineers on their own, likewise, corrective actions.

So, there is improved performance on the part of licensees. That does, I believe, translate to the performance indicators. But the findings themselves, I think, with what we saw, that there was something more in our expectations for the inspectors, how that influenced the outcomes.

MEMBER BIER: Yes, it seems to me -- Vicki Bier again -- that there's a mindset change that maybe comes with the ROP. Because, before that, I think if you were an expert in some particular area -- seismic or I&C or thermal hydraulics, or whatever -- and you see a way in which something could be improved from your disciplinary perspective, there was little barrier to saying, "Well, go improve it." And the ROP

requires kind of a more overall, broad-brush look of, you know, how big of an improvement would this really be? And, yes, maybe, technically, in this one sense, it might be a little better, but is it worth doing? And so, hopefully, that's part of what is behind that.

MR. LARA: Yes.

Next slide, please.

I think we're at, I'll call it, a small inflection point. You know, you hear the term about modern risk-informed regulator. From my perspective, it's not just a fancy phrase that's going away that resonated for a year. I think it's here to stay. That's my assessment -- with the completion times and the other risk-informed initiatives, to me, being bigger drivers, and impetus for us to really think about how do we want to do things differently.

MEMBER SUNSERI: Yes, but before you jump onto this slide, I had one question about the previous one. And that's the very low safety-significant resolution.

MR. LARA: Yes?

MEMBER SUNSERI: Do you trend or monitor those issues for repetitiveness or cumulative effects down the road? I mean, you know, if you were continually finding something repeating or a couple of

similar ones for a particular plant aggregated --

MR. LARA: Right.

MEMBER SUNSERI: -- would that increase the significance of the finding?

MR. LARA: No, they're not tracked. We do document them. We do not issue them tracking numbers. But the number is just very low. And really, it comes down to the uniqueness of each plant's licensing basis. They're just so starkly different.

But I have confidence that, if we saw issues relating to a particular component, perhaps generic, perhaps something that reflects that through our licensing process we didn't capture something, I can't imagine, sitting here, what that could look like, but I'm comfortable that we would raise those up, if the numbers were there.

So, this last slide is just a summation, and then, I'm going to go to Quad Cities. It's I think we continue to work on the inspection program. As we envisioned from the very beginning, it is a learning program. The risk-informed initiatives I think are a big part of that and demonstrate that.

We are continuing to focus and provide tools for our inspectors to disposition issues that are of low risk-significance -- Laura elaborated quite

well -- and the various licensing actions in this area.

And our footprint, trying to develop "risk thinkers" to work with our SRAs and help us continue moving forward, with the overall goal of becoming a modern, risk-informed regulator.

With respect to the Quad Cities ERV, this is an issue that's currently open. I'll call it open, in that we have not made a final determination of significance. We did issue a preliminary-like determination.

We are awaiting a licensee response this week, which that will detail, drive us to determine what the next steps are, whether it's a RAD conference, and anything else, additional information they may want to provide.

In this particular case, this ERV was installed in a previous operating cycle during an outage, but it was installed improperly. The mechanics did not follow the available instructions. There was a misalignment of a component, a plunger. And the licensee resumed plant operations.

And it is during the subsequent outage where they tested the ERV, and the ERV failed to operate as it was designed. So, then, our inspectors,

Chris Hunt, who is online there, and the team onsite, the Resident Inspectors began a review, a very detailed review as to whether or not this was something that the licensee could have foreseen and prevented. Was it something within their control? And the inspectors concluded that it was.

It was a degraded condition and it's something the licensee could have precluded. And hence, we continued with our risk assessment of that issue.

Laura and another SRA are heavily involved in that, assessing the significance of it. So, we look at exposure period. We look at potential common cause. Is this issue, this degraded performance deficiency applicable to the other SRVs? Common cause? Is it recoverable? And other PRA modeling techniques that the SRAs are involved with. And it is through those efforts that we have now concluded that it's preliminarily White.

The exposure period is an interesting one. We do have, the PRA practitioners have guidance, a document that defines how to model when the exposure period is greater than one year; in this case, a full operating cycle. And under those circumstances, the exposure period is limited, I'll call it, to one year.

And I believe that's the modeling technique, the approach, that the PRA, our SRAs took.

Laura, anything else on PRA/SDP that you could offer? Did that cover the essence?

MS. KOZAK: I guess the only thing I would say is, kind of -- in response to the previous question on the presentation I gave -- is, as we began working on this we discussed this with the Licensee every step of the way, to get to this process. Of course our approach is, we want no surprises, we want them to know that we're considering the issues, the errors in the maintenance program, we consider those to be performance deficiencies, we consider them to be more than minor.

We immediately talk to Licensees about the assumptions we're going to make in a risk assessment, we invite the Licensee to provide their risk perspectives which, in this case, they did. We make sure we both understand, you know, what's driving the risk. We communicate to the Licensee what we're going to put in our preliminary risk assessment that we send to our cert panel.

So our desire is to communicate frequently, clearly to make sure folks understand where it is we're headed, so that a Licensee can be

prepared to come to us to RIC conference or submit information, new information, that might be influential to our decision-making. And so we invite that new information, and that's where we're at in the process.

MEMBER REMPE: So thank you for -- the one part that's new information to me is that it was incorrectly installed, and again, I just saw what was in one of these inside NRC news briefs. And that's a little surprising because you'd think installation would require some sort of test afterwards, so I'm very surprised about that. And I assume the License, as well as across the fleet, would require that in the future.

MR. LARA: Yeah, that level of detail is one area that Chris Hunt was heavily involved in, trying to understand that very same point. Chris, any thoughts here?

MR. HUNT: Yes, I can go into more specifics about that. So this particular component and its electromatic relief valve actuator, is taken out of the plant every cycle to be rebuilt by the Licensee's technicians. They have a rebuild procedure that is supposed to walk through the technicians through all of the different aspects of how to take it

apart, how to put it together, and the various different milestones they have to meet to make sure the ERV -- the actuator, actually gets tested and is put back together correctly.

So what they figured out on March 21, during their cycling of the ERV post-shutdown, was that the actuator was binding up when called upon to work. So site did send it off and had a failure analysis done on it, and there was two particular pieces to the failure. One is an internal piece to the system, there are plastic guides to reduce rubbing internally to the solenoid plunger well actually are removable, and can be oriented backwards, upside down, in a different way than they're meant to be. And the Licensee procedure didn't have guidance provided to the technicians on, this is the correct way to put in these two pieces.

That was one aspect of it and then a separate aspect of it was, during the rebuild process, technicians are directed to look at a particular component on the actuator and see if it's straight and flat, and suitable for reuse. And if it is, they can reuse this particular component for the next cycle, during the rebuild. What ended up happening was, they had cleared that step in the procedure, but in a

different step the technicians were directed to change out that component.

And when they changed out that component they got some new components from stores, and the components they got from their supply were a different size than what they're used to seeing, but that wasn't immediately apparent to the operators -- or, sorry, the technicians -- while they were doing the rebuild.

It wasn't a critical attribute identified in the rebuild procedure, so when they were putting this new component, this upper guide bracket that was supposed to be straight and flat, onto this new plunger, and they torqued it down, per their procedure, it ended up causing a bow or a warp in this upper guide bracket that had previously been flat but now it's not flat. And there wasn't a kick-out in the procedure readily apparent to the technicians to say, we need to stop and assess this, so they just kept going.

And ultimately, when the actuator was built it was put back in the system, in order to fix this bow in the upper guide bracket, technicians took some, I'll call it artistic liberties, with the procedure, and they manually straightened the bracket which, from our review, wasn't an option that was

afforded them during the rebuild procedure.

And when they manually straightened it, they were able to get it to work on the workbench, and they were subsequently able to get it to work when they installed it in the system, but it's important to know that when you install it in the system, it's installed not at operating temperature, pressure, and conditions and such that are experienced during the operating cycle.

So everything's cold, thermal expansion hasn't taken place, so the fact that they were able to cycle it on the workbench, and cycle it for a PMT after it was put in the system, was not indicative of the valve being able to work correctly for the entire operating cycle. Because they had changed physical characteristics of the valve inappropriately when they put it together, and their PMT wasn't going to be able to catch that.

I hope that answers your question.

MEMBER REMPE: Yes, it does. Thank you very much. It be interesting to see how this is resolved and -- across the fleet, not just to this plant to --

(Simultaneous speaking.)

DR. BLEY: Chris, this is Dennis Bley,

kind of surprised -- and unless it's a piece they couldn't test at temperature -- the PMT didn't require a test after it was heated up, or you can't do it?

MR. HUNT: It would be very difficult to do a PMT at normal operating pressure and temperature, because this is one of the high pressure Emergency Core Cooling Systems. So the purpose of the automatic depressurization system is, in the case that high pressure core injection doesn't work, the pressure in the reactor is too great for low pressure injection to actually put water into the core.

So automatic depressurization system is basically a pressure relief that lowers reactor pressure down to where low pressure core injection can actually work. So to test this at power, at normal temperature and pressure, you would be inducing a pressure transience on the system.

DR. BLEY: Okay, I get it. Thank you.

MEMBER BALLINGER: This is Ron Ballinger, do I recall that these solenoids have had what I would call, a checkered history? In the sense that they've been problematic since, like, the early 2000s.

MR. HUNT: That's correct. And I'll keep it generic, so early 2000s and then again in, I think, around the 2014s-ish both, Quad Cities and Dresden,

had a power up rate, and what both sides figured out was, the induced vibration of the power up rate that was greater than what the components were seeing, and it caused some issues where the valves weren't actuating because of the vibrations were basically causing the actuators to eat themselves.

MEMBER BALLINGER: Break into pieces, yeah.

MEMBER SUNSERI: This is Matt Sunseri, Laura mentioned that -- excuse me -- that the operator provided some risk insights into this issue, do their risk insights differ significantly from what the NRC is finding?

MR. LARA: The preliminary significance -- let me defer to Laura on that one.

MS. KOZAK: Our assessment was no, as we looked at the Licensee's risk evaluation, application of their PRA record would also consider this particular configuration to be a white finding. The Licensee has initially discussed the fact that they might -- could modify their baseline PRA, that when you applied the, what we call the degraded condition, to the case, that perhaps the risk would be lower.

Those would involve some significant changes to the base PRA model, and so those are the

types of things that, if the Licensee wants to come into a RIC conference, or submit information, we'll be reviewing at that point. But our initial exchange of information is that we're very close on this.

MEMBER BALLINGER: But even if the ERVs didn't work at all, the target rod valves are still -- I mean, the system was still safe, right?

MS. KOZAK: So the answer to that question is yes, this really represents a reduction in the reliability of the depressurization system and, you know, our assessment process is looking at changes in risk that -- while we might end up calling it low to moderate -- are really below any level of risk change where we would say it's a, you know, a safety issue where the plant is unsafe in this condition.

Did I answer that question?

MEMBER BALLINGER: Yeah, thank you.

MEMBER REMPE: Thank you again also for discussing this, I realize it is in process and I appreciate the information.

MR. LARA: Absolutely. We should know more by the end of this week.

CHAIRMAN HALNON: Julio, does that complete your presentation?

MR. LARA: Yes, sir.

CHAIRMAN HALNON: Okay. It's time for a break, it's 10:24 -- 10:25 -- we'll come back at 20 minutes to 11:00. We'll be in recess until 20 minutes to 11:00 Central Time.

(Whereupon, the above-entitled matter went off the record at 11:25 a.m. and resumed at 11:40 a.m.)

CHAIRMAN HALNON: It's time to reconvene the Advisory Committee on Reactor Safeguards, Plant Operations, and Fire Protection Subcommittee meeting, and we'll turn this back over to the NRC staff.

(No audible response.)

CHAIRMAN HALNON: Sorry. Chris, are you there?

MR. HUNT: I am here.

CHAIRMAN HALNON: All right.

(Simultaneous speaking.)

MR. HUNT: So good morning, everyone. Again, I am Christopher Hunt, Senior Resident Inspector at the Quad Cities Power Station. Also presenting on this topic is Jorge Corujo-Sandin, he is a Senior Reactor Inspector at Engineering Branch 2. And next slide, please.

So Region 3 reached out to staff, and these were the topics that were highlighted as being

of interest for this discussion. So how were remote inspections during the pandemic conducted to assure adequate safety was being maintained, and what pandemic remote practices are carrying over to a routine way of doing business, and how are inspectors keeping current on topics such as advanced technology for monitoring, transmission of data, PRA methods, reporting of issues, and (audio interference). Next slide, please.

So I can speak from a resident inspector perspective, specifically I was the resident inspector at Byron when the pandemic started. So after remote work was mandated, Region 3 established on-site coverage requirements that aligned with the existing guidance in inspection manual chapter 25-15, that we continued to follow, through the pandemic.

So, specifically, at least one resident inspector, or qualified regional base alternate, should provide site coverage during the regular workday, so Monday through Friday. And the intent of the guidance was that site coverage by someone qualified as an inspector, there not be a gap of greater than three consecutive NRC working days, and that's how we ended up working at Byron.

So during the early days of the pandemic,

there wasn't a whole lot of reliable information with how the virus was being transmitted, so myself and my supervisor took a staggered approach to office coverage. One of the goals of that was to avoid physical overlap in the office, and to provide enough time for anything that one of us might've accidentally brought in the office to, you know, I'll call it, decay away. I think at the time the common understanding or accepted time for how long the Coronavirus lived on surfaces was, like, 48 to 72 hours.

In addition, when one person left the office for the day we would wipe all the common areas down with disinfectant wipes, as an extra line of defense.

So, because it was a staggered approach, my supervisor and I touched based frequently about plant status, status of inspection samples and progress, and then any issues that we needed to follow up on when one of us was on site. And additionally, the resident office also supported our DRS inspections as needed or requested. Next slide, please.

So with regards to Teams and technology, at the start of the pandemic the NRC was using Skype for remote communication, which didn't have the

synergies that we have today with Teams, particularly between the resident office and the Licensee.

However, since the Licensee transitioned to remote work as well during that time period, the residents were provided with Licensee laptops that we were able to take home. So this allowed us to remain, I'll call it plugged in, to the site's meetings, as well as it facilitated access to Licensee staff for follow-on questions or follow-up items, as they came up.

In terms of agency communication, relatively shortly into the pandemic the agency shifted from Skype to Teams, and that gave us a -- as an agency -- a standard way of communicating that we're using today. Of note, the ability to share documents and share your screen during interactions, I think significantly increases the collaboration and information exchange between inspectors, and it very much is a useful tool, in that regard. Next slide, please.

So I touched on it earlier, during the start of the pandemic the Licensee provided the residents with laptops. This allowed us to have the same access to all of the usual programs that we would use for things like plant status, corrective action

program review, and the review of maintenance and surveillance records.

Ordinarily when, you know, in a non-pandemic time, if we were going to be doing something like plant status, we would be pulling this information up from the Licensee's desktop that's in each one of the resident offices anyway. So to have it on a laptop and do it remotely -- really the transition was seamless, there wasn't any difference.

Anything that wasn't already digitized we would review on paper during our next on-site coverage day either, you know, myself or my supervisor, and that's how we would deal with work orders and surveillances that were of interest prior to being digitized, because that takes a few days.

So that's the perspectives from the resident office, and I'll turn it over to Jorge for his perspectives on remote inspections for DRS.

CHAIRMAN HALNON: Hey, Chris, before we move on -- this is Greg.

MR. HUNT: Yeah.

CHAIRMAN HALNON: We had at least one issue in the press that dealt with the comprehensiveness of walk-downs, without going into the details of that one, did you find yourself out in

the plant more often or stuck in the office looking at those documents you just mentioned, that weren't digitized?

MR. HUNT: Me personally, the documents needed to be reviewed, whether they were going to be, you know -- whether I was in the office or whether I was out in the plant. Specific activities that require plant presence, with the exception of the portal monitors which, again, because of the way the pandemic started and the understanding of the transmission, so you got to put your face right next to this plate that everybody going to the RCA is putting their face next to, and so that was not delightful.

But with the exception of that, most of our inspections in the field are done by ourselves, so the social distancing aspect of it, particularly plant walk-downs, and follow up on equipment degradation type stuff, I don't personally feel like I was hindered in going out to the site -- out into the plants. And the paperwork review was not outside of normal amount of review in that case.

Does that answer your question?

CHAIRMAN HALNON: Yeah, in a sense. Did you find yourself -- did you walk away from the plant

thinking you had enough time in the plant to at least target the right systems, or did you yearn for more time? And I guess that's the, you know, the biggest delta between the pandemic and not is the ability to get into the plant, and then I guess second would be to interact with the staff.

So I guess, you know, given the alleged incomprehensive -- no, that's not the right word -- the deficient walk-down at this other site, I think it was in Region 4, I guess the question was, did you feel like you got enough in-plant time on the systems to not feel like you were leaving something unturned?

MR. HUNT: Short answer is yes, I feel like I had plenty of time to interrogate issues out in the plant, that's a particular topic that my supervisor and I focused on when we were on-site to make sure that the time spent on-site was in the plant, reviewing the things in the field that we needed to review per our inspection procedures.

So the idea was, avoid going into the office just to sit in the office. It was, you know, your plant time, the day that you provide site-coverage was the time that we were going to be out in the plant. And we would hand off issues to each other, hey, I saw this in the corrective action

program, next time in it's your turn, can you go take a look at this? And that's how we would handle it. So the focus, when we were providing site-coverage during that time was, be in the plant. So I didn't find myself yearning for more time in the plant, but it did take some conservative preparation up front in order to make sure that that was a focus.

CHAIRMAN HALNON: Good, thank you.

MR. HUNT: Okay, Jorge, I'll turn it over to you.

MR. CORUJO-SANDIN: Thank you, Chris. If you could go to the next slide, please?

(No audible response.)

MR. CORUJO-SANDIN: Can you guys hear me?

CHAIRMAN HALNON: Yes, very well.

MR. CORUJO-SANDIN: Could you please go -- okay, there we go. So a quick introduction, as Chris mentioned, my name is Jorge Corujo, and I am a traveling inspector, mainly engineering type inspections.

So from a traveling perspective, there's a number of different inspections that our traveling inspectors perform. There are the engineering ones that I just mentioned, but we also have radiation protection, we have security, so, like, ISIs (audio

interference). So we have a number of different disciplines that use the region as a base and then go to the site to do their actual foreign inspections.

From a traveling inspector, a regional based inspector perspective, you know, a couple of things vary on how we perform these inspections, and we ensure that they were able to meet all the requirements so that we were assuring the safety of the public.

One of the key things that played a big part into how effective, or how we made these inspections, is the on-site presence that we had for the inspection. Now that can significantly vary, you know, from the full remote inspections to the day trip, to a hybrid, to a full on-site presence. And very quickly, you know, full remote is, as the name implies, it's completely remote. The inspectors never put a foot on-site.

That is typically not the -- typically the least desired option, but if depending on the COVID conditions, that might've been an option we had to do. Those are typically more paperwork-based inspections, in those cases if we needed some site presence for walk-downs, we would have tried to either, coordinate with the resident inspectors -- considering that we're

taking away time from their inspection activities -- or we could try to ask the Licensee's to provide us pictures or videos. Again, that's why we're talking, that's not necessarily the most preferred option.

From there you have, like, a day trip which is, you know, that would be typically like a representative, typically would be myself if I'm the team lead. And you go to the site one or two days, and you're going there -- as Chris mentioned, you have a mission -- so you're trying to figure out, okay, what do we need to see, what are the walk-downs we have to complete, what are the things that someone needs to be on-site for.

And we would go take care of those items, we would go on-site, go on walk-downs, we'd take pictures, videos, try not to take just the videos and the pictures of the stuff you need immediately, but you're trying to think ahead, what else am I going to need, what else is my team going to need as we move forward through this inspection.

So you're trying to capture that, just a lot of detailed videos of components, broad pictures of area. You're trying to put yourself in the mind of, what is what you need, what's the follow up question you're going to get, and if something doesn't

seem right, just be conservative and take more and more videos and pictures.

Some of our EP folks did something similar to this, you know, when they're doing their EP inspections, they had some program-based inspection -- they can do those more from a full-remote, that may be a paperwork review. But the ones that they had to observe drills, they would try to do the bulk of the work, you know, remotely but then they would go to the site to do the actual observations during the drill day.

From there you have your hybrid -- hybrid is just, I think it just implies, you know, part of the team is on-site for part or most of the inspection, and the other part of the team is remote -- and that could be because, due to other individual health concerns.

And then the gold-standard, if you will, that's the full on-site presence. That's what we do pre-pandemic, and now when we going back to our normal -- to whatever the new normal is -- we can do it as a full on-site presence for the entire team, for the entire normal time, but then we enhance it with some of the tools that we have learned that we can use, and we'll cover those a little bit in a couple slides

here. Next slide, please.

Some of the other items that are key to being able to have a successful inspection, especially in this COVID environment, is the access to technology and the familiarity and comfort with its use. Chris mentioned Microsoft Teams, that's one of the big improvements that we had.

Office 365 sharing tools, access to the cloud-based both file sharing -- those are Box, Certrec -- that allows the inspection team and the Licensee to exchange a lot of information. Some of our inspections are very data heavy, and file heavy, so depending on email has never really been a good option. And the previous approach of using CDs and DVDs became effectively impractical when no one's in the office to receive them, and as computers move away from allowing the use of CDs and DVDs.

Now the use of Teams is something that's been a significant improvement -- as Chris mentioned, we started with Skype -- Skype had a very limited capability, in addition to other people were really comfortable using them. Teams allows us to -- one of the things we've done in my inspections is, we allow (audio interference) are not the day-to-day full time inspectors.

For example, your branch chief, your SRAs, your resident inspectors. We can create Teams and allow them to share a lot of our real-time information that we're using, that we're seeing. So they have access to see -- we have issues board that allows them to see where the inspection is looking into, what our potential areas we're focusing in.

So for example, the SRAs, we call them, embedded SRAs, they're doing all their normal duties but they have access to a lot of the real-time information the team is looking at. They can see ongoing chats, discussions, they can see a lot of the questions that are being asked, they're able to participate in our team meetings. And as issues start to develop they can provide a real-time feedback into, not just the selected component that was looked at, but would help us focus on specific areas as we go through that inspection process.

One of the other big tools that Teams allows is screen sharing. In the past you would have to call the Licensee when you were remote and tell them, hey, I'm going to email you this document, or go find this document. Okay, now go to page 59, now look at the top-third of the document, there's an equation.

So that eliminates a lot of that because

we can just simply put a document in the same screen, we can highlight, we can point, so we're working off the same template, if you will. Again, there's nothing as good as being there with that individual, but it's a significant move forward.

And the other one is using those bigger conference, similar to what we're doing today. You know, we can see each other through the camera, we can -- help us read a little bit more of that body language. You know, some of those, again, those intangibles are difficult to measure when we're remote. So Teams particularly has been a significant tool in our arsenal to make sure that we were successful.

One of the other things is that some inspection programs, like I mentioned, like, the EPs, RPs, security, they do tend to have pre-established professional relationships with their counterparts in the plants. So anytime that that pre-existing relationship existed a lot of those inspectors were able to do their work -- you know, they already have that either, trust or they know that some individuals require a little bit more follow up -- so they can bank on that in an effort to maximize their efficiency and effectiveness remotely.

And again, one of the key things we're trying to do is we're trying to maintain that synergy, especially for big team inspections. One of the inspections I tend to work on particularly, just six people, we might have observers, so trying to -- a lot of good issues come because a lot of people are working. I mean, if someone mentions something and another inspector listens, and he can provide a little nugget, and through that collaboration is where big issues, or good issues, are developed.

And Teams allows us to kind of force, you know, or pre-plan some of those opportunities to discuss to try to maximize that synergy. Again, remember, the gold-standard is we're all together, but we're trying to get as close as possible with the tools available. Next slide, please.

So key things to make sure this works, we talked about what's needed, and I said the team has to adopt to the fullest these technologies. Like said, you know -- and Chris mentioned -- at the beginning when we had Skype people were hesitant, (audio interference) hesitant use particularly before the pandemic. If you're in my team, you're going to come out with a, almost an associate degrees of the use of Teams, because we're going to use it every day, as

much as we can.

So we're trying to, again, get everyone on board, get everyone to participate as much as possible.

Dealing with the validations and the verifications for walk-downs, that is a challenge when we're doing it remotely. And that's what I mentioned before, we're trying to be very mindful of what we need, trying to get the most of it -- trying to find the right time to go, you know, for some inspections going early on-site is key so we can put our eyes on it. Some of them, it might be better to go a little bit later in the inspection, once we might have a couple things we might want to follow up on.

So it's a challenge, definitely. Particularly the least presence you're trying to maintain on-site -- again, depending on COVID conditions, etcetera.

And a lot of information is available remotely, that's one of the good advantages that's happened through this. So we do have the ability to try to get them either, sent to us, you know, the document reviews -- some of the maybe security inspectors, they do have the ability to have, like, screen-shares temporarily for certain documents, they

might want to have a little more control.

So, again, the tools are there, we do have them, we are trying to use them, we're trying to maximize their efficiency. Next slide, please.

And then, in a quick summary, so what are the best practices carried forward? So as you heard me say multiple times, it's the use of Teams. Now there's always issues, we had a similar issue and example at the beginning of this meeting, right? Where there's some -- well, you know, someone can't connect, or I can't hear you. And that's pretty normal but the use of Teams is a pretty standard suite that's being used by a lot of people, it does allow for a significant improvement.

A lot of Licensees do have Teams, or their systems allows them to connect to their Teams or our Teams. They use Box, again, for sharing all the bulk information, that's another great thing that we're going to keep on using forward. It allows to exchange a lot of information real-time, very fast, very effectively. And by using common tools, like Box or Certrec, it cuts down on the learning curve of people to use them, on our side and the Licensee's side.

And then one of the big, big, big items that came through this, and we're using forward, is

our ability for the inspectors to submit questions in writing, directly to the Licensee via email. In the past that was not used, we had to do the bulk of our questions through a verbal exchange. That would slow us down, that would significantly require a lot of back and forth, you know, three-way communication. And while we do still have that tool and we still use it, we do have the ability to put in, you know, quick questions to the Licensee.

Now we do have, as the team leader and as a civilian with this, you have to be careful how you do that, you have to make sure that you're not putting in conclusions or assessments, or something that can be interpreted to be a change in a licensing basis, right? So you have to be mindful, but it does allow, again, that quick exchange of information, whereas in the past if I was remote I would have to call the Licensee, set up a meeting list, read them the question, have them read them back to me. Now I can quickly setup a couple quick questions, organize them, send it to them, and I make sure that they acknowledge that they received them, and they can move it along their process significantly fast.

And then one of the other best practices we found out, some of our other inspectors, they

didn't necessarily do a lot of -- what I'll call, prep type information -- meaning, you put a request for information ahead of time before the inspection, then you get it before you show up on-site so you can kind of maximize your inspection effort. The pandemic kind of forced them to do that and they've actually found it to be very effective, so they're moving forward with that approach.

So before I move on back to Chris, are there any questions for me?

CHAIRMAN HALNON: All right, this is Greg. The inspection questions by email, I assume that you're using a single point of contact on site to submit those questions to so they can do the vetting. Because it seems like that could be misused and just sent to like an individual system engineer or something to that effect. And the regulatory folks and management not really know what the answer, since it could, you know, just be between two people.

Is that -- is that accurate, or is it --

MR. CORUJO-SANDIN: So you're correct. There's the potential for some missed communication, lost. The -- what I -- what I do is, as the team lead, I have -- I have every question that is sent out to the licensee to -- so that they copy me.

Again, that was mainly in the beginning to kind of track progress, making sure everyone understands what we should cover, shouldn't cover in a question.

The other thing is we established with the licensee who -- who do they want to receive the question. Now, typically, when we have big team inspections, each inspector has a counterpart. So the way they'll typically with some exception is the inspector will send the question to their counterpart. They will copy me, for example. And then I offer the licensee, hey, do you want someone else to be copied.

And they might choose to have either the reg assurance person copied, or they might have their team lead on their side copied. And so we establish the ground rules head on. But you're correct, we have to be very mindful of how we do it.

CHAIRMAN HALNON: And those are record -- I mean, inspection records, they're not necessarily in ADAMS and that sort of thing as part of the inspection report, is that correct?

MR. CORUJO-SANDIN: No, the way that they're -- they're not treated as inspection records. What happens is after that inspection is completed, all -- and the report is issued, as those -- all that

gets eliminated and deleted and cleared, and kind of cleared out basically.

CHAIRMAN HALNON: Okay, so the inspection report stands on its own, you don't need to fall back on this database of questions to understand information within the inspection report. Is that correct?

MR. CORUJO-SANDIN: Correct.

CHAIRMAN HALNON: Okay, thanks.

MR. CORUJO-SANDIN: No problem.

CHAIRMAN HALNON: Okay, if there are no other questions, Chris, I send that back to you. Thanks for your time.

MR. HUNT: All right, thank you. And next slide, please. Anybody else hearing a significant amount of feedback?

DR. BLEY: Yes.

MR. HUNT: Okay, so on this slide, we're going to go over some knowledge management tools and some examples of how inspectors keep current on regional and Agency issues, as well as industry initiatives. Most of them are self-explanatory, but I'll discuss a few in a little bit more detail.

So the power reactor issue safety meeting, or as affectionately known as PRISM in Region III, we

hold this every Wednesday, and it allows a more in-depth technical discussion about issues that inspectors are encountering out in the field or regional issues and what approaches inspectors are using to effectively evaluate those issues and licensee performance.

And it provides more of an open forum for asking those technical questions that sometimes is difficult during a traditional status meeting like that we have on Mondays of allowing to really get a few layers deep into the technical discussion. And gives the inspectors the freedom to explore some what-if type scenarios.

So that's been particularly useful since we've started that for knowledge retention and transfer. DRS Inspection Debriefs, those are -- those are specific to recent DRS inspections.

And again, it's an opportunity for the individual inspectors to discuss their inspection at the different sites and some of the issues that needed to be resolved and reach out to their counterparts for feedback and similar -- similar scenarios.

The Regional Utility Group meeting, usually we call it the RUG, is a meeting that allows licensees and other industry representatives to

interact with one another and the regional office. And I believe these are quarterly.

And they're good meetings to learn about industry initiatives and perspectives and also get a sense for either regional initiatives or if an industry initiative are at the potential for being in conflict with each other, discussions happen in that arena early on.

Nucleopedia, that's an Agency initiative similar to Wikipedia to catch and retain knowledge management type information.

And then Region III Risk Cafés. Those are Region III-specific right now, and they discuss how the region has applied risk-informed decision-making and also goes into the Agency's Be riskSMART initiative and those types of topics. We get to talk about and kind of embrace that risk-informed mindset.

So this isn't an all-extensive list, but it is what I would say is good examples of how inspectors are given the opportunity to stay up to date on innovations within the Agency, and then within the industry as well.

MEMBER REMPE: Chris, this is Joy. I'm interested in the PRISM and the RUG meetings. I don't -- maybe we've never asked the question when we used

to go to the various regional offices, but I don't recall hearing about such meetings.

When did they start, are they public? Do you ever try and take insights from those meetings and transfer it across to other regions? Tell me more about it and some typical topics that are -- have been discussed recently.

MR. HUNT: Okay. I can speak the most about the PRISM meeting. That is an internal Region III meeting. We used to have a status meeting for the region every Monday and Wednesday.

And then the Wednesday meeting transitioned to more of a power reactor-specific meeting, as opposed to having the entire region's buffet of topics. So we don't typically talk about materials and issues in the PRISM. It's very specific to reactors.

It's an internal meeting, so it's not public. And for instance, some recent topics, we discussed at length some of the issues Dresden was having with brassing issues in their intake bay and ultimate heat sink.

So inspectors gave a presentation, gave a status of what the site was doing and how they were responding to the issue. And it allowed other

resident offices to take important data points from that and apply it to our site.

So for instance, after that presentation, I was able to do a walkabout at Quad Cities on the Mississippi River, see what sort of buildup of brassing was happening along Quad's intake structure, and engage with some of their engineers in their Operations Department to, you know, validate that we're aware of the issue and that the issue was or was not affecting them. And it turns out it wasn't.

And had a conversation with the plant manager on different approaches that Quad Cities takes for similar instances and how they track it, how they monitor it.

So that would be an example of the information exchanged during the PRISM, and then how I specifically use that information to inform my inspection activities at Quad Cities.

Now, the regional utility group meetings, full disclosure, I've only been to one, and it was a while ago. So I might have to default to somebody perhaps in the room that has more experience with going to those meetings and some of the specific topics that are discussed.

MR. LARA: This is Julio Lara. At the RUG

meetings, we often take some of our inspectors with us to learn and be able to engage with the representatives, you know, face to face real time on either technical issues, sometimes contentious issues where we disagree on particular issues.

And we don't talk specifics about the particular finding, but rather how we can better communicate, perhaps generic applicability, and why the particular issues are of concern. So it's really an open dialog.

It's not a public meeting, it's really a meeting by the utilities. They invite us for a period of a few hours periodically, and we engage on issues that are perhaps impact not only the region, perhaps even more broadly across all the regions.

MR. CORUJO-SANDIN: And if I may, I can add a quick comment. The reason the logs were added to this slide is we got feedback from our emergency preparedness inspectors that that was a tool they used during the pandemic to make sure that they were talking, you know, across their differing licensees.

And it would help them stay in touch of what was coming down the pike, you know, potential changes or how they're managing the pandemic. Or potential changes to their program. So I believe Greg

Hansen is available, so he has specifics. I might try to put him on the spot and ask him to do specific questions if he's available. That's why I included in this slide.

MR. HANSEN: Yes, Jorge, I am available if there's any questions. But I believe you captured it. You know, we have the quarterly RUG meetings. And the area VP, and as Julio stated, it's our licensee meeting.

And it covers all of the utilities in Region III come together. We were using a virtual format during the COVID, we're trying to get back to an in-person because it promotes better discussions.

But those meetings are very useful in sharing information, receiving information from the licensees, and also providing them information and answering questions that they may have or other person -- other individuals attending may be spurred on to asking questions based on the discussion topics that occur.

MEMBER REMPE: Thank you.

DR. SCHULTZ: Just to follow this, this is Steve Schultz, just to follow up there, our emergency planning and the RUG meetings. The impression I get is that those meetings are then -- the topics for

those meetings are coordinated by the utility group. Or do you have an opportunity to work in your topics into those meetings are part of the agenda?

CHAIRMAN HALNON: This is Greg, allow me to remove the veil from the RUG meetings. The Regional Utility Groups is a national independent group. It's independent from NEI, it's independent from any organization. It's got its own charter.

And it's -- there's representatives, typically subject matter experts, at the - sometimes at the working level all the way up to the manager level that gets together for a two- or three-day meeting amongst themselves, and they develop the topics that they want to discuss with the NRC.

They'll invite senior managers from the NRC region to a two- or three-hour, sometimes a half a day meeting. Mo, you've been there many times. Regional administrators typically we invite. And they often attend. Sometimes it's down to the director level and sometimes even down to like was mentioned to the inspector level. And sometimes ten, twelve NRC folks show up.

And it's an interaction on clarification of policies, clarification of issues. And other things that go on. So the industry develops the

agenda, they allow the NRC to say what's on your minds, this is what's on our mind.

And it's an interactive type of meeting that goes on. And there's one for EP, there's one for security, there's one for regulatory. There's a national organization that includes all the chairmans of the different regions.

So that's sort of how it all works out in the RUG arena. Mo, did you want to say something?

MR. SHUAIBI: No, I think you've lectured it well, Greg. And I was just talking to Julio that you were even a part of that at one point.

CHAIRMAN HALNON: Right, and RUG, was the national RUG Chairman for six, seven years and the was RUG Chairman for a few before that.

MR. SHUAIBI: That's right. So yeah, specific to the question, if we have topics from the NRC that we want to discuss at these meetings, yeah, through our interaction and coordination for the meeting, we do offer them and they do end up on the agenda and we do end up talking about them. So we did -- so.

And there's a national RUG, and every region has its own RUG with its own licensees as well so that they could have their own meetings relative to

their -- to their regions. But you captured it very well, Greg, I don't think I need to add any more. Thank you.

MR. HUNT: Any more questions for us?

CHAIRMAN HALNON: Any members, consultants, have questions?

DR. SCHULTZ: Chris, this is Steve Schultz again. Just one question. You talked about during the pandemic how you handled well the inspection responsibilities with the units. My question is you were talking about the NRC side of personnel availability and so forth and how you organized that.

I presume that during the pandemic on the licensee side, their personnel was sometimes on site, sometimes offsite. And how did you handle the personal interactions with those utility staff who I'm sure you ordinarily would have been in contact with on a very frequent basis and they weren't available on site during the pandemic?

MR. HUNT: So one of the things that Jorge impressed upon was having -- having that onsite presence and developing the relationships with the licensees.

Both myself and the Senior Resident were fortunate that neither one of us were new to the site.

And had developed what I would consider a strong communication with the licensee in pretty much every aspect of their organization.

So knowing who to go to and who's their backup, how to reach out and get a hold of somebody. Again, because the folks were not onsite but they -- the site did go to Teams. And there was the expectation, as with everywhere else in the, you know, in the working world that they were available remotely.

If we weren't able to get a hold of somebody, I mean, usually for us, it's nice to have that relationship with senior leadership and management at the site. So I don't have to find the specific individual, I just need to know where the manager is and say I have a question on this topic, I need somebody to get a hold of me to answer these questions.

And the -- let the site's leadership figure who's going to answer that, then mail and the question. Never, trying to think back, never had any real issues getting hold of anybody because of that expectation on the -- at -- on the licensee level is, you know, that they told their folks, yes, you're working remotely, but when needed you will be

available.

And sometimes for inspection purposes, when a team was coming on board, they would require those folks to come in onsite and to be there as, you know, in the pre-pandemic time period where, as Jorge was mentioning, each inspection team member would have a counterpart and they would have a team lead on the licensee side.

I've seen that done too, where if your group was the topic of an NRC inspection, then everyone needed to be onsite and establish that communication in face-to-face if it was onsite.

And sometimes they would come onsite and work with the team remotely. So that's a roundabout way of giving you a sense of how we handled it. And additionally, you know, my senior resident and I didn't let ourselves be encumbered by a dogmatic adherence to every three days somebody needs to be onsite, we can't go any sooner.

If there was an issue or we needed to be onsite to talk to somebody, we would just come in onsite. And we would take those precautions, social distancing and masking was mandated then. And we would just understand if there's extra precautions that we would take in order to get the job done.

And that particularly applied for unexpected degraded conditions, assessments that needed to be made, or meetings that needed to be had. We were not encumbered by every three days is the minimum or the maximum you can -- whatever I'm trying to say. So if it happened more than every three days, it happened. And we planned for it and we were able to handle it.

DR. SCHULTZ: Good, thank you. An excellent approach for both the inspectors and for the licensee, I appreciate your explanation. Thank you.

MEMBER BIER: Another question from Vicki Bier. It sounds like your relationships at Byron were pretty cooperative during the pandemic, but also before the pandemic.

Are you aware of situations within the region where the relationships were more difficult, either because the licensee was maybe not as cooperative, there were some, you know, outstanding issues that were in contention? Or just because again there was maybe a new NRC staff person assigned who didn't yet have those relationships?

MR. HUNT: Me personally, I am not aware of any particular resident site that was having difficulties in communication with their associated

sites.

MR. LARA: Chris, if I could. This is Julio Lara. I think more generically our challenges in communications came about primarily during outages. A lot of people onsite, a lot of contractors augmented staff onsite and us trying to do -- get our job done and find people to talk with with the protocol six feet and mask and the like.

So that was our biggest challenge communication-wise, but it wasn't because of a licensee being difficult, let's say.

CHAIRMAN HALNON: Okay, I'm going to move on here. We've got a lunch break from 11:30 to 1:00, but we're going to push on and finish two presentations and eat into that lunchtime a little bit. So Billy, you're up on the field performance.

MR. DICKSON: All right, thank you. And I've kind of truncated some of my -- some of this presentation based on some of the time limitations.

But again, hello, my name is Billy Dixon. I'm the acting Deputy Director in the Division of Reactor Projects here in Region III. And today I will be discussing -- briefly discuss the reactor fuel performance at the operating plants in the region.

Here in the region, the daily monitoring

and assessment of reactor fuel performance is completed by resident inspector staff. This monitoring takes place as far as the resident inspector's review of data while completing plant status activities.

This assessment includes comparison of the actual core, thermal parameters to safety and operating limits contained in the tech specs and in the core operating limits report. Additionally, inspectors trend -- monitor trends and plant parameters such as offgas activity and the primary coolant activities.

The residents also review and assess information documented in the licensee's corrective action programs. These issues have included vendor performance issues and the results of licensee's post-radiation fuel examinations.

The inspectors also shared -- share observations with and concerns in this area with staff from NRR to gain insights on past operating experience and the results of the reactor fuel vendor inspections and audits.

So based on the information I've gathered from my discussions with some of the resident inspector staff regarding this topic, currently there

are no over-arching safety concerns relative to reactor fuel performance or reliability at the operating plants in the region.

It has been noted that the advance -- that advances in operator, plant operators' ability to detect, locate, and suppress leaking fuel rods early has significantly reduced the number of root failures over the last two decades.

With that said, the introduction of debris, which has led to fretting, of grid to rod fretting and baffle bolt jetting, remains challenging in terms of limiting small localized leakers. Licensees have noticed small leakers here in the region in some of the recently completed operating cycles.

Corrective actions to address -- to address the -- this most common cause of fuel fretting has led to new debris filters being introduced into fuel designs and the development of licensees' initial -- initiatives to increase worker sensitivity and improve procedures focused on preventing foreign material being introduced in the RCS during maintenance activities.

One I believe noteworthy item I wanted to mention today is that there has been no pellet clad

mechanical interactions or PCI-related fuel leakers in the region within the last five years or so, which I think is a significant accomplishment by the industry. Next slide, please.

So to get a more comprehensive assessment of reactor fuel performance not only here in the region but across the U.S., I will have to refer you to the staff in the NRR's Division of Safety Systems, in particular the Nuclear Methods and Fuel Analysis Branch in that division.

Each year, each fuel vendor has a meeting with the Division of Safety Systems technical staff to present highly detailed technical information to ensure that any diverse trend can be quickly and appropriately treated.

That's the end of my presentation today, are there any questions?

MEMBER MARCH-LEUBA: Yes, this is Jose. The no PCI failures in the last five years, do you attribute it to better quality fuel changes on improved modern fuels, or more care on the operation in the facility? And don't tell me both.

MR. DICKSON: So based on my conversations with the folks at DSS on that particular hot topic, it's a combination of all of the -- all of the -- all

the above that you mentioned today. The licensees, the procedures associated with changing powers of broad exchanges have greatly improved -- greatly improved over the last decade or so.

And the licensee quality assurance program -- I mean the vendor's quality assurance program in terms of fabrication is greatly -- have allowed better materials in the fuel design. So it's a combination of all the things that you mentioned today.

MEMBER MARCH-LEUBA: So do you think, I mean, the introduction of the 11x11 fuel in BWRs -- maybe we'll ask this question from vendors. Actually we're going to see one of them next month.

CHAIRMAN HALNON: And one thing to keep in mind is the INPO has ratcheted up their performance indicator to be zero leakage. So over the last five or six years, that has greatly pushed the, both the vendors and the utilities to improve fuel performance.

MEMBER MARCH-LEUBA: Yeah, but mostly leakage happens because of vibration and loose parts, right. So but the PCI is something that you have control over. Asking the question, thank you.

CHAIRMAN HALNON: Thank you, Billy. Any other questions on fuel? Okay. Mo, back to you to bring it home.

MR. SHUAIBI: All right, thanks, Greg. Can we get the next slide, please.

All right, I'll try to be quick, I think most of this stuff you've already heard about this morning. So overall, the level of performance for plants in Region III is good. We have all of our plants with the exception of one in the licensee response column, which is column 1, the best column to be in for performance.

Davis-Besse is in column 2, the regulatory response column. And the issues that put them in column 2 you'll be hearing about this afternoon, so I won't go into the details of that.

In terms of all oversight, we continually assess what we find during our inspections and operating experience and we continually adjust our inspection activities to make sure that we're addressing what we see. Also, once a year around the February timeframe we get together and go through a formal process of evaluating every plant's performance for the previous year.

And based on that and operating experience, we formally decide our adjustments, our inspection schedule going forward. The result of that effort usually ends up in a letter to the licensee of

our assessment of their performance, as well as the revised schedule for inspection activities that are upcoming.

We also make decisions about public outreach during those meetings in the context of end-of-cycle public meetings that you've probably heard about, I'm sure you've heard about.

So we talk about whether we do a formal meeting with the licensee or a townhouse type meeting or a poster session type meeting, depending on what we're seeing in terms of performance as well as depending on the level of interest in the area for that particular plant.

Now, in addition to performance, we also evaluate trends in industry, what initiatives they may be undertaking. Laura has talked about several of those. From a risk-informed perspective, the licensees are pursuing several changes and have pursued several changes. We want to be informed of what's going on so that we can prepare for our own inspection activities.

I'll give you an example for the risk-informed completion times for tech specs, which Laura covered earlier I believe. When industry started going down that path, we started getting smarter by

getting together, bringing in information for our licensees, doing table talks with our senior reactor analyst, our resident inspectors management teams to make sure that we're -- we know what's happening at these plants and we know how to inspect them, given their new processes.

I think you've seen a matrix of all the different activities that are being pursued by the plant, so I won't go over that. I think Laura did a good job of covering the details there.

Also for our own benefit and our desire to become a more modern and risk-informed regulator, Julio, as I mentioned earlier, is leading our region and a team within our region, the risk-informed decision-making team to -- through monthly risk cafés, where we get together and we talk about how best to incorporate risk insights into everything that we do.

We look to risk-informed decision-making and use of PRAs and or to the Agency's Be riskSMART initiative. We apply it to both technical and nontechnical. As I'm sure you're aware, the riskSMART framework can be used for nontechnical areas as well. And we've been highlighting that as well through those risk cafés.

As Jorge and others mentioned in their

presentations, we use risk insights throughout our inspections doing it specifically to inspections. It's easy to consider how we would do sampling of what we're going to look at at the front end of the inspection.

We could use risk insights and we do risk -- use risk insights to come up with samples. It's easy to consider how we use risk insights after an inspection when we have findings and issues like the ones that you'll be talking about this afternoon.

But we've also highlighted and emphasized and advanced our thinking in the context of let's use risk insights every day throughout the inspection, if you will.

Inspectors make real life, real time decisions in the field all the time, so the more that we consider risk insights in those kinds of decision-makings, the better that we will be able to focus our efforts to hit the most important stuff during our limited time of inspections.

Let me get the next slide, please. So this is a topic that has been discussed in various forms. This is a trend in Region III of the inspection findings from 2012 to 2021. The next slide shows, if you give me the next slide, please, a

similar trend across all regions.

So we've been thinking about what that means and where that may be coming from. There's various factors, and Julio has discussed some of these.

For example, the Agency went through the backfit training initiative that came out of the Byron and Braidwood PORB issue that was considered a backfit by the Agency. So we had to tighten kind of the way that we look at things in the context of things that come up during inspections, are they backfits or are they legitimate violations or findings.

We've also utilized more risk-informed thinking in the way we do things. We've had efforts that were focused on bringing about consistency across the four regions in the context of what things were finding and how we're dispositioning them.

Some of those efforts resulted in clearer guidance in our inspection -- in the inspection process in relation to minor and more than minor and distinguishing between the two. Minor issues wouldn't show up on this chart, for example.

In addition, industry has been more willing to challenge issues when they come up. I remember being a licensing reviewing and others

remember being inspectors where when issues come up, licensees sometimes would accept an issue even if there are some disagreements. Licensees are more willing to challenge issues today if they have disagreements than they were in the past.

And also, if you ask the inspectors, they will share with you openly that NRC management has been providing more scrutiny to issues when they come up, I believe appropriately so.

So that, in a nutshell I believe, is what would explain the trend in findings. So we are seeing a lower trend. On its own, it's not really a concern to me. If you just look at the trend, if we're in an appropriate place now, this is where we've been, that's not a problem from my perspective.

The issue that we need to deal with and make sure that we're mindful of and monitor and emphasize is we want to make sure that our inspectors are not discouraged by the scrutiny that comes about, either by licensees or by us, the licensees challenging issues or by us challenging issues.

We want to make sure that they're willing and able to raise issues, allow for appropriate vetting that, sure, is maybe harder because of the scrutiny that we get, but that's okay. That's a good

part of the process for us to be able to go through issues and at the end determine whether we have an issue that we need to pursue or not.

So that is really the leadership challenges for us to make sure that they continue to be willing to raise those issues and that we're appropriately dispositioning them.

So just to share numbers or the number, the number -- the decline in numbers isn't the concern. To me, it's more of making sure that our inspectors are still willing and able and not discouraged from raising issues.

From my perspective, I think they are. I still seem them raise significant issues. I still see them raise quite a number of issues. And I don't see them as being shy from pursuing them and challenging internally and externally, if you will, the different views that may arise around those issues.

I have one other item that I'd like to discuss that's not on the slides, and that is a derecho that took place near the Duane Arnold Nuclear Plant back in 2020. I'm sure you've heard about it. It actually devastated the area.

We had a presentation from a representative from the state Iowa that came and

talked to us at our last counterpart meeting here and showed a lot of the destruction that happened near the plant, non-nuclear related, if you will.

The plant also took a hit. It did take out their non-safety related cooling towers. It did have an impact on offsite power. The plant lost offsite power for about 24 hours. It did also challenge their safety-related intake in the context of debris that accumulated and ended up on screens in the river.

Ultimately, the plant was operate safely by the operators. They implemented their procedures and the plant did -- was maintained in a -- in a safe condition throughout the event. This event was analyzed by the Accident Sequence Precursor Program by the Agency. The risk analysis for that event came up with a conditional core damage probability of E to the -4, 8E to the -4.

In addition, it was analyzed by the Agency's LIC-504 process, which takes events like this and determines whether we need to present -- to pursue any generic -- generic plant-specific or generic actions that we've -- that we believe would be appropriate from a public health and safety perspective.

And that was the result of -- the result of all of that was documented in NRC Information Notice 2021-03. And you could see the learnings there.

Essentially, the main contributors to the -- to the risk that was calculated, the conditional core damage probability through the program was station blackout. And design-specific aspects of the plant being that it's a single-unit plant, there's no cross-tide with other electrical power sources from another unit, if you will or station blackout capabilities that may exist.

It's also the major contributors to the higher -- to the -- on the high side. On the low side in terms of mitigating the numbers and not causing it to be higher, flex strategies were approved, key to making sure that it stayed below the -- either the -3 or higher -- higher risk values. So flex strategies were the driving factor from a mitigation perspective.

So in summary, plants are performing well. I believe our inspections are well-focused on plants as they relate to issues and operating experience we're seeing. Industry has been and continues to pursue risk-informed initiatives. We continue to advance our thinking and our ways of being ready and

being a modern, risk-informed regulator.

And lastly, we're mindful of the trends we're seeing in our inspection work, the trends that I showed you on the inspection findings. We're very mindful of those and we will continue to work to make sure that we maintain a strong presence and a strong focus on safety.

And that concludes my presentation.

MEMBER REMPE: I have a couple of --

MR. SHUAIBI: Yeah.

MEMBER REMPE: I have a question but I also have a comment. On the Duane Arnold event, it wasn't just the flex strategies. My understanding is they actually had revised the operator guidance based on insights from Fukushima and subsequent testing to operate the RCIC more effectively and have a more orderly shutdown where they didn't actually -- they overrode some trips.

And so is that your conclusion also, that this was a very effective improvement in the way the operators handled it?

MR. LARA: Okay, I'm trying -- Laura Kozak, are you on? Laura and I had many conversations on that very point, so I'll defer to Laura.

MS. KOZAK: So certainly we believe that

RCIC was operated effectively and that contributed to keeping the risk low. What was an interesting aspect of that, and it shows up in the ASP event, is that the operators utilized an option in their procedures to raise reactor water level and bypass the trips. And so that was -- that was an interesting aspect. Certainly done properly.

But from a risk perspective, if done improperly in control of that level, water gets into the steam lines, then that can affect both HPCI and RCIC. So you will see that as a risk insight showing up in the overall ASP analysis for the -- for the event.

It shouldn't be viewed as any type of an improper action. I believe that action came about in EOPs as kind of a result of post-Fukushima response, if I'm not mistaken. So it's really sort of the first time that at least I've seen it used in response to an event like this.

So again, a unique implementation of the EOPs. Important for us when we respond to events to review to make sure it's performed in accordance with procedures and training, and we found that it was. And so it was an effective strategy.

But certainly understanding it, and if

it's done improperly, the implications of that would have some impact on those systems. So that gets included in the risk analysis. So you see that if you read the ASP evaluation.

MEMBER REMPE: And so I'll try and read this, but to try and make sure I understand what you're saying is yes, they did it effectively and they followed the procedures, but perhaps your evaluation has helped them realize that it could lead to an ineffective way of responding to the accident.

And they need -- and are they going to revise the EOPs a bit more to try and make sure operators better understand the implications of what they're doing?

MS. KOZAK: Well, of course Duane Arnold is shut down now, so they're revising.

MEMBER REMPE: Yeah.

MS. KOZAK: EOPs.

MEMBER REMPE: There are other BWRs with RCICs.

MS. KOZAK: Right, so our hope through things like the LIC-504 process and the IN and the ASP evaluation is that that operating experience gets out and that people review that and then, you know, incorporate that into their training and their

guidance as appropriate.

We did not find anything improper or wrong about the procedure or the response. But it certainly is a risk insight that we would hope people would take away and be aware of. When we have these actual challenges to the plant where operators are actually having to use RCIC and use HPCI, even when they do it effectively, it's risk-informed inspection to go in and review, you know, how that was accomplished over a 24-hour period of time.

We don't see, you know, loss of offsite power events of this duration very frequently. So it's an excellent opportunity for us to review and for industry to review the challenge to that plant and take away whatever learnings they can.

MEMBER REMPE: Thank you, I appreciate the additional information.

The other things is in your plot where you show the three findings, how -- you're about three-fourths of the way through the year, how many findings do you have now on Region III?

MR. SHUAIBI: I don't have the data for this year yet, we didn't generate it yet. We generated this one in support of end of cycles and RIC meeting for last year. So I'm not really checking the

exact number of findings for this year. But I'll look around the room and see if anyone --

MR. LARA: Yeah, I haven't tracked them.

MEMBER REMPE: Because it's interesting both nationally as well as region III are going up. And I'm just wondering if it's continuing to go up, if it's leveling, or that you have no -- like you're not a 50 yet or 75. There's just no insights at all.

MR. LARA: Well, I have tracked them. We're right now, the reports were just issued for the very -- the six month, the first six months of the year. So the reports just came out last week, so now if we wanted to, we could pull the data and see what the numbers looked like. But I haven't done that as of yet.

MR. SHUAIBI: And I fully expect that at next year's end of cycles, beginning of the year, February timeframe, we'll probably see an updated version of this plot just to see how it's doing. I mean, I can't tell you that the bump-up is real or not real. I mean, there is some speculation that the bottoming out could be for lack of presence from COVID, for example.

MEMBER REMPE: Right, that's what I was curious about.

(Simultaneous speaking.)

MR. SHUAIBI: -- or so. But we can get you that information at the end of the year if you're interested.

MEMBER REMPE: It's just interesting, yeah.

MR. SHUAIBI: We can get you that. This is a topic that's been discussed in many forums, even at the RIC it came up and you know, it's one that all the regional administrators and the agencies looking at in the context of how can we, you know, what can we take away from this, right.

MEMBER KIRCHNER: I have a few questions on that plot.

MR. SHUAIBI: Sure.

MEMBER KIRCHNER: Over here, Walt Kirchner. So the findings are going down. That generally, that's positive. The licensee is learning what the inspectors are looking for, perhaps, and improving over time.

But are you finding out as the numbers drop, are the findings -- do you group them by category some way? Are you finding more electrical findings versus -- I'm making this up -- versus mechanical condition? Or what's the baseline now?

Assume for the moment that the curve is going to flatten out. What categories are most of the findings?

MR. LARA: Yeah, we don't -- we don't categorizes them. There was a study trying to evaluate whether they were associated with a particular inspection procedure, for example. If a particular procedure had more findings than others relatively speaking. Perhaps that was indicator. But we don't track them by discipline. And I can't recall whether --

MEMBER KIRCHNER: Do you not track them by systems or?

MR. LARA: No.

MEMBER KIRCHNER: Is that worthwhile doing? Because if indeed you continue to have findings and you find, I'll make this up again rhetorically, it's in the compressed air systems. It may be because they're aging or whatever.

That's what I would look -- when I see data like this, sure, the overall trend is where you want it to be. But hopefully it would be continuing down. But if there's repeat offenders in the group, then you've got indicators of either, you know, mechanical aging problems or I don't know, insulation

and electrical cables, etc., etc.

Does anyone look at that and say, okay, over the fleet we're seeing that we continue to have findings in this area? And should that be of concern? Maybe not, but. That's what I would do with data like this if I were in your shoes.

MR. LARA: Yeah, we don't -- we don't look at that. We also rely upon the maintenance through inspection where we look at the licensee's categorization and reliability numbers for particular systems components to see if in the A-1 category reflecting poor performance, lack of reliability. Findings themselves, I can't think.

Laura, you have some thoughts?

MS. KOZAK: Well, I was just going to add certainly you could tell the numbers of findings in each of the cornerstones. So we monitor safety with each of the cornerstones. And I would tell you just from my experience the majority of our findings are in the mitigating systems cornerstone.

Now, to break that down further, I would suspect that our operating experience group in headquarters does reviews of that, and they often issue what are called operating experience smart samples, where they are seeing trends for us to go out

and take advantage of our inspection procedures to look at that.

And then the other good data source I would tell you you could go to, again, the Accident Sequence Precursor Program has a great dashboard that you can go to, and you can sort on which initiators cause the most ASP events. Which systems and components contribute to the most ASP events.

So it's a very effective tool that brings together a lot of data that we can -- that we can go to to see where there might be some trends or some issues.

MEMBER KIRCHNER: Maybe you should look at events.

MS. KOZAK: Sorry, what word?

MEMBER KIRCHNER: I would use the word events.

MS. KOZAK: Oh.

(Simultaneous speaking.)

DR. BLEY: Yeah, quite a few years ago NRC had a group that was charged with doing just that, and they did a lot of trending work. In fact, the station blackout stuff came out of their group.

Then it was dissolved sometime in the last ten or 15 years and perhaps absorbed into OPE,

although it's not clear to me who's really doing that function anymore or if anyone is. So I think it's a good thing to bring up back at headquarters with, probably with the OPE folks and ask them who's -- who's doing that work now.

MR. LARA: Yeah, that's a great point. It used to be AEOD, and Laura worked in that organization. And now it is OPE, and she's right, there's different ways to parse data.

CHAIRMAN HALNON: Yeah, and keep in mind finding is a sort of a course adjust to licensing performance. You have the licensees are tracking at a much lower level and not just findings but observations and comments and all that.

And that's a key input to the RUG agendas when they come to you saying we're seeing a trend in this area. So a lot of that trending, Walt, is done by the licensees and by these organizations. You mentioned Certrec several times, Scientek, all these, Bechtel. They all have these databases that they slice and dice them many different ways for the licensees.

I'm going to go ahead and get us down to the end. Just any other overriding comments or questions from the members or consultants before I

work through this closing?

Okay, Mo, you guys, thank you very much. Very informative, well done presentations. We appreciate it. I think it was enlightening in many different ways for many of us. We really appreciate it.

We're going to recess for lunch and come back at one o'clock. And then we'll have a focused conversation at one o'clock Central Time on Davis-Besse's performance on the diesel. And then we'll work through the afternoon into our closed for the security information that we'll be talking about.

So at this time, I'm going to recess until one o'clock.

(Whereupon, the above-entitled matter went off the record at 12:56 p.m. and resumed at 2:00 p.m.)

CHAIRMAN HALNON: Okay. This is Greg Halnon, Region III. We're going to continue with our Plant Operations and Fire Protection Subcommittee meeting, and we'll bring it back into session at 1:00.

So our first presentation is on the Davis-Besse emergency diesel generator speed switch failure. So with that, I'll turn that back over to the Division of Reactor Safety. Kevin --

MR. BARCLAY: Good afternoon.

CHAIRMAN HALNON: There you are. Okay. You got it, Kevin. Go ahead.

MR. BARCLAY: Sounds good. Thank you.

Well, good afternoon. I'm Kevin Barclay from Engineering Branch III. I was one of the inspectors on the 2021 Special Inspection Team at Davis-Besse. The special inspection was chartered to review circumstances associated with degraded diesel performance from the 2019 to the 2021 time frame as well as a complicated reactor trip that occurred on July 8th.

Today I'm going to summarize one of the issues reviewed during the special inspection associated with the failure of the Division 2 diesel generator speed switch and also discussion the related finding and violation.

Next slide. All right. To summarize the event at a high level, on September 4th of 2020 during a monthly surveillance test diesel generator No. 2 locked out on a failure to start. A lockout means the diesel attempted to start by engaging the air start motors but did not reach a minimum speed within a certain time period. When a lockout occurs the diesel stops its automatic starting sequence. The licensee's troubleshooting efforts found thermal damage on the

diesel speed switch and they replaced that and restored the diesel to an operable status on September 7th.

Next slide. Visually the speed switch is a small metal enclosure with multiple connections used to secure input and output wires. The speed switch measures pulses generated from a sensor which is mounted on the diesel near the flywheel. As the metal teeth of the flywheel pass near the sensor a pulse is generated and those pulse counts are associated with certain diesel speeds and as the switch energizes different relays as the diesel passes through the various speed milestones.

You will see a couple output types there: speed signal as well as relay contacts. That speed signal is for indication only. The relay contacts really accomplish the safety-related function.

Next slide. Okay. We could take a brief look at some of the functional examples associated with the speed switch. During the air start, or during the starting process the air start provides the initial engine rotation during the starting process, and after the diesel is started and just provided its own mechanical power those air start motors need to disengage to prevent damage. Other functions include

the room cooling ventilation, flashing the generator magnetic field.

A little bit more on that: Before the generator can generate its own electrical power its magnetic field needs to be temporarily supplied by the station's DC distribution system and the speed switch controls the timing of that magnetic field during the starting sequence.

Additionally, the speed switch supports trouble alarms and engine lockout if the diesel doesn't start as expected, kind of like what we discussed in the previous slide.

And next slide? All right. Here we can see the damage speed switch after it was removed from the diesel. If we take a look at that horizontal card across the bottom, that is the main circuit card for the speed switch. And then the vertical one that's facing the photo, that is one of the auxiliary cards and it's associated with the input power portion of the speed switch. Those round devices -- I think one of them is kind of -- you can see a little bit of the red poking through there. They're normally red. And those are metal oxide varistors, and we'll be talking more about those later on in the presentation.

Next slide. Okay. Initial findings. As

expected, the licensee entered the speed switch failure into their Corrective Action Program. Given the switch was installed only for a short duration before it failed the licensee did send that switch off to an external vendor for inspection, and that vendor found damage to the input power section of the speed switch and concluded that the damage may have been associated with power supplied to the switch.

Next slide. So given that information from the vendor, the licensee went ahead and performed a review of their DC system and found that a ground had occurred around the same time on the same DC bus a week prior to the diesel failure. So the licensee did conclude that a speed switch component shorted to ground coincident with a separate independent ground on the same electric DC bus and those two grounds allowed the excess DC current to flow and damage the speed switch.

Next slide. Okay. Before we go any further I want to describe a few different battery or DC distribution design styles in the industry. If you look at the left side, you'll see two independent batteries each providing a different voltage. I would say this is more of the typical design in industry and even some plants only use a single DC voltage. And

then when we look at the right side, this is more of an uncommon design and it's seen in very few plants.

In this particular design two smaller batteries or two lower-voltage batteries are connected together in series. And so if you want to power in this particular case a component that needs 125 volts DC, you'll connect it either to the top connections, which is the positive, and the center one, which we call the neutral. Or if you needed maybe a larger DC motor to be powered, you could power that across the positive and then all the way at the negative at the bottom to get that full 250 volts DC.

And we can go to the next slide. So for the specific DC bus that we're going to be looking at we can see the diesel speed switch is powered by that upper battery from the positive and the neutral bus connections and the ground detection circuit is connected across the lower battery on the neutral and the negative bus connections.

Just a brief discussion on the metal oxide varistor. We kind of talked about that a little bit before. They're used in electromagnetic compatibility and surge protection circuits. They kind of act a voltage relief device and they can kind of -- for voltage surges they're going to protect the main

circuit. So if you have input power that surges, from a voltage perspective the input power surges, the metal oxide varistor acts like a short circuit to ground and takes that excess voltage and funnels it to ground protecting the main circuit. So that's what the function of the metal oxide varistor typically is and kind of what -- in this particular how it's being used.

Additionally, the ground detection circuit, that's a simple design there. It consists of a grounded connection between two large resistors and the current meter. When an unintentional ground develops, current flows to the ground detector connection through the current meter and then alarm set points on the current meter alert the control room operator to the presence of a ground. In ideal situations those control reactor operators will be able to identify and correct the ground before a second ground develops.

Next slide, please. Okay. So this illustration shows the MOV failed or shorted to ground and the resulting current path. If we start at -- we're looking at the upper battery. If we start at that positive terminal of the upper battery and follow that up and across through the metal oxide varistor to

the ground connection, then the current flows through the ground connections over to the ground detector. And then you'll see it takes a couple paths to get back to that negative terminal of the upper battery. So as it flows through that meter that sets off a control room alarm. And that was the case on August 25th, 2020 when the initial or the first ground came in.

If we can go the second slide? Sometimes between August 28th and August 29th the ground detection circuit switched to a hard neutral ground. With two grounds in an ungrounded system we can see the current path is now changed. This is the majority of the current path. There still is some current going through the ground detector, but in this particular scenario it's very insignificant compared to the main current flow. The currents would flow in this situation through that metal oxide varistor through the second ground and back to that negative battery.

In the lower case in that ground detection circuit those large resistors on the previous slide prevented large current. They keep a current and a ground situation when there's only a single ground extremely low and that prevents the current from

damaging components.

And in that particular case from the August 25th until that August 28th time frame the diesel speed switch would have functioned. But once that second ground came in, we're bypassing those large resistors and so we don't have anything to stop that current flow. So we end up with that large current flow that damaged the metal oxide varistor and gave us that damage that we saw in the previous picture.

Next slide. So after the thermal damage occurs we can see the main current path at this point would then be through the second ground that occurred on the lube oil pump for the high-pressure injection pump. And then that would go to the ground detection circuit and then back to the negative terminal of the lower battery.

Let's see. All right. Next slide. And now we can kind of look at a summary. I've kind of gone through three different scenarios, but we can kind of look at the summary and the timeline of the failed speed switch. And that was really the first ground starting on August 25th. The actual diesel restored and then returned to an operable status on September 7th.

So starting over here on the left you can see where the ground detection circuit came in at the -105, which signifies on the legend there a positive ground, or a ground on the positive bus. And that lasted until log reading on August 28th at 8:00 p.m. And then that was the last time it was logged at that -105 value.

And then the next time it was logged on August 29th at 8:00 a.m. it was the hard neutral ground value of 0 milliamps. And that stayed approximately at that level until the September 1st time frame when the ground hunting process found the ground on the high-pressure injection DC lube oil pump and they opened up that breaker. And at that point those grounds returned to close to normal, but they still have some oscillations in there.

And then once on September 5th when they were troubleshooting to diesel to start and they opened the breaker up for that speed switch, then the grounds returned to normal.

All right. Next slide. Okay. So the initial conclusions of the licensee were that a random early life failure of a speed switch sub-component created an electrical short or ground, they believe the speed switch replacement resolved the issue, and

they documented a lot of these conclusions in Licensee Event Report 2021-001 in April of 2021.

The special inspection started on July 26th of 2021. And up until that point the licensee had been working on an EDG reliability study because in addition to the failure they had -- this would have -- the failure we're talking about was the September time frame of 2020 -- they had an additional diesel failure on May 27th of 2021 and then another diesel issue in the June time frame of 2021. And as these additional failures happened the licensee began conducting an EDG reliability study and kind of reviewing the 2019 to 2021 failures for those diesel generators.

In addition to that, the NRC -- we started asking some preliminary questions prior to the SIT, and we had some initial thoughts or concerns related to a Part 21 that came out from Engine Systems, Incorporated, the safety-related provider of the switch.

And that was documented -- I don't know if I said that. 2017-050 was the Part 21 number.

And that Part 21 described how components associated with the output contacts of the speed switch shorted from voltage spikes created from an

inductive kick of external relay coils that were nearby. And we were concerned that the input power to this switch was close to that inductive kick phenomenon and started asking some questions about components on that auxiliary card and their rating. So we asked some questions associated with that.

And at the same time the licensee started asking questions and reviewing those previous conclusions. But what they found was the speed switch design was not compatible with their DC distribution system. That metal oxide varistor is rated for 170 volts DC, however it was exposed to about 201 volts DC on a continuous basis. But that was not just when the switch was used for the starting circuit of the diesel. That 201 volts is applied always. Concluded that the MOV likely failed or shorted from the over-voltage condition. And I already talked about the drivers for the updated conclusions.

Next slide. So this will help explain a little bit why the 125-volt DC circuit ended up with the 201 volts being applied to the speed switch. If you look at the upper battery you'll see -- these are nominal -- normal system voltages. Before I had nominal system voltages up there. But you'll normally see about 130 volts on that upper

battery or when you combine it with a battery charger.

And so when you take that 130 volts from the upper battery and then we go look at that ground detection circuit on the lower battery, those large resistors that we talked about that really keep that current flow low, they do a little bit of voltage division. And so there's actually a voltage potential at that ground where that ground is hooked up to the station ground of about 71 volts between the ground and the neutral bus. And then you can see that there's 13 volts between the neutral bus and that upper positive bus giving that -- given that 201 volts.

Next slide. So essentially that 201 volts is continuously applied to that metal oxide varistor. And it really comes down to that three-wire hybrid design for the battery system.

Next slide.

MEMBER MARCH-LEUBA: Hey, Kevin. While you have -- this is Jose. Can you go back to the previous slide? The 201 volts is independent of the failure on the HPI -- the high-pressure -- the additional failure, correct?

MR. BARCLAY: That's correct. That 201 volts was applied from the day they put it in in I

think October of 2019 all the way up through the failure.

MEMBER MARCH-LEUBA: So was a previously a failure of design?

MR. BARCLAY: That's correct.

MEMBER MARCH-LEUBA: The second failure didn't have anything to do with it?

MR. BARCLAY: Right, the second failure was completely independent.

MEMBER MARCH-LEUBA: Okay. Thank you.

MR. BARCLAY: Next slide? All right. From a performance deficiency finding perspective the licensee failed to select a speed switch replacement that was suitable to the application. They failed to evaluate how the electromagnetic compatibility portions and surge suppression portions of the speed switch circuit interfaced with the existing plant design in its equivalency evaluation process. And that really should have been identified through vendor drawing reviews, discussions with the vendor, or providing the vendor with design information associated with their hybrid three-wire DC distribution system.

CHAIRMAN HALNON: Kevin, that first bullet; this is Greg, when they replaced the switch

did they do that under a modification, or was it a like-for-like, or how did that --

MR. BARCLAY: Yes, I believe it was an equivalency evaluation, which would be a like-for-like. They have to evaluate the old characteristics of the switch and then evaluate the new characteristics of the switch. And they did not -- they looked at the -- they really looked at the input voltages. The old switch was 125 -- rated for 125 volts DC. The new switch was rated for 125 volts DC. So that evaluation -- because they switched from a design that had this electromagnetic compatibility feature in it the ground came into more of a -- more consideration in this newer design.

CHAIRMAN HALNON: So, but it was a documented evaluation, whether it was a modification or commercial grade or --

MR. BARCLAY: Yes. Yes, it was a documented evaluation --

CHAIRMAN HALNON: Okay. Thank you.

MR. BARCLAY: -- in the equivalency evaluation process. It wasn't a full-blown modification. It was more of a like-for-like evaluation.

Next slide? The violation is against Title 10, Part 50, Appendix B, Criterion 3, Design Control for the failure to establish measures for the selection and review for suitability of application of parts that are essential the safety-related function of the diesel speed switches. And that was really for the failure to establish those voltage potential specifications between the positive and the ground and the neutral and the ground.

From an SDP perspective the finding was evaluated to be a white finding. And that's for an exposure time of nine days. And that was evaluated as the diesel fails to start.

Next slide?

MEMBER MARCH-LEUBA: This is Jose again. This failure of the big resistors, was it because they were testing or was it happening before they tested? I'm asking whether the exposure time was nine days or was it longer? Did the burnup of those circles; varistors I think you called them, happen when you tried to test the diesel generator or did the failure occur -- have occur two months before and it was (audio interference) --

(Simultaneous speaking.)

MR. BARCLAY: I understand the question.

The failure occurred on the -- we believe between the August 28th and August 29th log readings. So the testing of the diesel did not initiate the failure. It was a failure that was undetected from the August 28th to the 29th.

MEMBER MARCH-LEUBA: So what my point is, it wasn't an incipient -- it was a failure that was just ready to happen when you turned the switch on. So the exposure time was longer than nine days. But anyway, they fixed it already. So I mean, it may have been there for several months. And indeed it was there since the beginning of time when you installed the switch because it may have fail at any time. On any demand it may have fail.

MR. BARCLAY: Right, but the failure of the switch -- when you have a single ground, you'll get the ground detection alarm for that positive ground that came in on that positive bus. And that was August 25th. So we know when the ground -- we know when the first ground came in. And the switch would have functioned from August 25th until August 28th with a single ground, but once that second ground comes in and you get those high currents, then the thermal damage occurs. Also the licensee does test the diesel on a monthly basis, so additionally there's

the monthly test.

MEMBER MARCH-LEUBA: So for the burnup of the components you needed the additional ground?

MR. BARCLAY: That's correct. Yes, we needed the second independent ground for the burnup to occur.

MEMBER MARCH-LEUBA: Okay. Now I got it. Thanks.

CHAIRMAN HALNON: When you had the first alarm come in; I guess it was what, the 25th, did the licensee institute their ground searching applications there looking for that first ground?

MR. BARCLAY: They did. They did. And ground hunting can take some time. Obviously when they go do ground hunting they have to open up a lot of different breakers, and obviously they'll have to comply with their tech specs. So that takes some time for -- sometimes a little bit of work week planning and figuring out what breakers to open, what sequences to open them.

Sometimes you'll get grounds as well that are kind of moisture-based. You may get some wet weather, some rain, and you're going to get some grounds that come in. And there are some grounds that are more of a long-term challenge for licensees

because they may come in for a day and then that moisture kind of evaporates or goes away and the grounds gradually go away. And then they have to just kind of keep track of their ground hunting efforts. And then when they get another moisture event continue on with that process.

CHAIRMAN HALNON: Okay. So they're actions during that time was -- they were prudent. They were looking for it. I mean, I realize that ground hunting is more of an art than sometimes a very involved process.

Prior to that, absent of any grounds, the switch was adequate for the voltage going through it, recognizing that a second ground put too much voltage through it?

MR. BARCLAY: Right, the switch -- or the metal oxide varistor was only rated for 170, so by seeing that 201 components -- or 201 volts, it had that continuous degradation going on over that 10 months or 11 months and that eventually that degradation led to the failure, which was the ground. So the first failure is the ground itself. That metal oxide varistor is not needed for the speed switch to function. It's really, like I said, a protective device from voltage surge, but after that second

ground came in you had that high current flow through there. The thermal damage eventually affected the main circuit as well of the speed switch.

CHAIRMAN HALNON: Okay. So the 10 months prior to that it was -- the diesel was fine? It was just not a matter of it hadn't failed yet because the --

MR. BARCLAY: Right, the diesel would have functioned during those 10 months.

CHAIRMAN HALNON: Has this been able to be recreated to confirm that? I mean, it seems like it would be pretty easy to put that voltage across it for a period of time and determine whether or not it was an actual degradation issue.

MR. BARCLAY: I don't know that the licensee did that testing.

CHAIRMAN HALNON: Okay. Thanks.

MR. BARCLAY: Yes.

MEMBER DIMITRIJEVIC: This is Vesna Dimitrijevic. I'm a little confused. Is this considered a single diesel generator, right? Division -- which division was it?

MR. BARCLAY: It was Division 2 for the failure, but both of the diesels had the same vulnerability. Division 1 and Division 2 diesels had

the same design issue.

MEMBER DIMITRIJEVIC: Right, but since you just explain to us that that only happen after you have a two grounds, you -- this is not considered common -- was it considered common-cause failure of diesel generators?

MR. BARCLAY: I believe common cause was considered in the SDP process because the potential existed for the common cause. So that's evaluated in the risk assessment process.

MEMBER DIMITRIJEVIC: Yes, but that would not be right finding if you will lose both of your emergency power supplies for nine days. I'm surprised with that, so this is why I'm sort confused. Was this consider loss of one division or the both divisions?

MR. BARCLAY: It was considered loss of one division, but I believe an additional factor is applied for the common cause portions of the SDP. And we'd have to talk to Laura or John, if they're there, to get -- if we're going to get too much further into the details of the weighting and of the common cause.

MS. KOZAK: Right. Right. Kevin is correct. For the risk evaluation one diesel was considered to be unavailable for the nine days, but because of the common design deficiency we look at the

potential for common cause. And we have some probabilistic techniques to adjust that probability of common-cause failure even when we haven't seen an actual failure on the second division. And that's how we treated it.

MEMBER DIMITRIJEVIC: So you basically increase the planar probability of the second diesel generator? Is that how that was done?

MS. KOZAK: Yes, that's how it works.

MEMBER DIMITRIJEVIC: Okay.

MEMBER KIRCHNER: Just out of curiosity, how would you estimate the probability of another ground fault? It would be pretty high, wouldn't it?

MS. KOZAK: It's not at that level of detail --

MEMBER KIRCHNER: Oh, okay.

MS. KOZAK: -- yes, that we would do this common-cause approach that we use. It doesn't get down to that level of detail.

MR. BARCLAY: Okay.

CHAIRMAN HALNON: Go ahead, Kevin.

MR. BARCLAY: Next slide. Oh, was there another question?

CHAIRMAN HALNON: No, I was just encouraging you to continue.

MR. BARCLAY: Okay. Sounds good.

Next slide? Okay. Corrective actions. The licensee documented the updated conclusions on July 25th, essentially the very first day of the special inspection. And since it was identified as a design issue, the licensee didn't obviously have a design prepared to immediately install in both diesels, so they did have to come up with an interim corrective actions as well as their long-term final corrective actions.

The interim corrective actions, one of the main items was the Operations Department ground hunting procedures were updated to prioritize the diesels. So if you get a ground in that case, they could prioritize making sure the speed switch is not the source of the ground. Recall that the diesel was functional from the August 25th time frame through that August 28th time frame. So if the licensee can find that initial ground before a second ground occurs, the components should remain functional or operable.

They also replaced both speed switches. Now they had to replace them with speed switches that had the same design vulnerability, but at least they had new metal oxide varistors in there. So if the

degradation mechanism of that 10 months is the time-based degradation, they had a fresh set of metal oxide varistors in both of the diesel generators.

And then they also implemented a six-month speed switch replacement frequency if the design upgrade took longer than the initial six months. And I think the installation dates I think were the end of January or beginning of February of 2022, so it was taken care of earlier this year with speed switches that were compatible with the DC distribution system.

CHAIRMAN HALNON: Kevin, this is Greg again. If they're operating with one ground how did they get by the single failure issue to keep the diesel operable?

MR. BARCLAY: Are we talking about past operability or --

CHAIRMAN HALNON: I'm thinking here we are cooking away with one ground and we have two operable diesels. Then if you assume another hard ground somewhere that would cause the voltage to --

MR. BARCLAY: I understand your question. I don't know if that's been -- and I thought of that a little bit during the inspection, and I don't know how much the agency has evaluated grounds in general. Take this out of the context of the diesel for now.

Grounds in general -- licensees get grounds not frequently, but it's not unheard of for licensees to have a ground. How is that treated in the single failure criterion and one additional failure? I don't know that there's a very direct position on that, or if there is, I don't have it.

CHAIRMAN HALNON: Yes, it's curious. Maybe we can have a follow-up later on. Go ahead.

MR. BARCLAY: Okay. All right. Next slide.

MEMBER KIRCHNER: Just before you go on; this is Walt Kirchner again, so the fix was to have an MOV, the varistor replaced with something that was 260-volt compatible? Or what was the fix?

MR. BARCLAY: The final fix -- I don't have the details of the final design. That will be reviewed here starting August 29th when the Inspection Procedure 95001 starts. But the design is really to change the speed switch model overall. I believe ESI had a different model that -- I believe it had a separate power supply and it just -- it was able to handle the voltages. So it wasn't that they went in and replaced a specific component of the existing speed switch. They just went to a different speed switch model that -- yes, there we go, that Dan Mills

put that in the chat -- has a final -- the final design has a separate power supply that can handle the voltages.

MEMBER KIRCHNER: Now does that have to be -- I assume this is a safety function. So it's independent then of the DC power supply that supports a lot of the other plant functions? Or is the DC power supply just for the diesels?

MR. BARCLAY: No, the DC -- these are being powered --

(Simultaneous speaking.)

MEMBER KIRCHNER: (Audio interference) pump and other things that suggested that DC power supply serves more than the diesel generators.

MR. BARCLAY: Oh, yes. I didn't mean to -- I should have said that when I was going over those diagrams. There's many, many loads that are powered from the licensee's DC distribution system. I only threw a couple up for the purpose of this discussion, but there's many different loads that could have grounds for various reasons.

Next slide?

And next slide? Oh, somewhere we had a questions and discussions there, but that's all I had for the formal presentation.

CHAIRMAN HALNON: Questions from the members? Any other questions, consultants?

(No audible response.)

CHAIRMAN HALNON: So we expect the supplemental report out approximately when, the 95001?

MR. BARCLAY: The 95001 will start out as a one-week inspection. And it closes at the end of that inspection, that report should be out in I believe 45 days from that time frame.

CHAIRMAN HALNON: Okay. So end of the year approximately?

MR. BARCLAY: Yes.

CHAIRMAN HALNON: Thereabouts?

MR. LARA: Yes, we'll also -- you'll hear at the next session a discussion of the other inspection finding that's greater than green. And we'll conduct a supplemental inspection for that as well. And based upon the outcomes of both of those we'll determine how and when the licensee moves over to column (audio interference)?

CHAIRMAN HALNON: Okay. The diesel has a performance indicator as well, at least from the MSPI? Is that still green with this?

MR. LARA: Kevin or Daniel Mills, performance indicator data on diesel generators, what

do those look like? You guys know?

MR. BARCLAY: It stayed green.

CHAIRMAN HALNON: Okay. So that won't factor into the --

(Simultaneous speaking.)

MR. LARA: Yes, I don't that's (audio interference).

MR. BARCLAY: Some of these failures from the SIT factored into that, but it didn't cross the threshold.

CHAIRMAN HALNON: Okay. Good.

Any other questions, comments?

(No audible response.)

CHAIRMAN HALNON: Okay. Thank you, Kevin. Good presentation. We appreciate the concise review of that.

MR. BARCLAY: Thank you.

CHAIRMAN HALNON: At this point I'm going to open it up for public comment and reminding that if you're on Teams, un-mute yourself, provide your name, affiliation if appropriate, and make your comment. If you're on just on the phone, *6 will un-mute you. So at this point we will wait for public comments.

(No audible response.)

CHAIRMAN HALNON: Okay. Hearing no

comment --

MEMBER BIER: If not, I have one follow-up question.

CHAIRMAN HALNON: Oh, yes. Okay. Please do.

MEMBER BIER: Sorry. I just wasn't quick enough.

I know that Davis-Besse was responsible for -- or FirstEnergy was responsible for a couple of other big problems back a decade or two ago. And you had a very clear explanation of the cause of this, but I'm just curious whether there's any indication that the initial design error was in any related to some of the corporate culture issues that were identified earlier in earlier events or if this was just something that could have happened to any plant?

MR. LARA: Kevin, are you still there?

MR. BARCLAY: Yes, I am. Just trying to get my --

MR. LARA: Yes, go ahead.

MR. BARCLAY: -- get the Teams working. Okay.

No, we did not identify any cultural ties related to this issue, to the -- it was more of the technical review and the engineering work in this

particular case.

CHAIRMAN HALNON: Okay. Since we didn't have any public comments, we're in discussion mode. Is there any other comments or questions and/or discussion from the ACRS?

Go ahead?

DR. BLEY: This is Dennis. Yes, Dennis Bley. You talked some about improvements in ground hunting procedures and is that spelled out in the SIT? Is it spelled out somewhere else? I'd be real interested. I mean, this isn't a new problem. Fifty, sixty years ago we had the same kind of problems. And whenever you get grounds weird stuff happens. This is pretty weird after you tracked it all down. And not finding the grounds and cause of grounds often leads you into trouble later on. So can you tell us anything more about the improvement in the ground hunting procedures?

MR. BARCLAY: Well, what I was describing as far as the changes for the ground hunting was really more of an interim corrective action. Many times there's a systematic way for them to search for the grounds. What they did for that interim action; you know, maybe diesel was No. 37, they moved diesel up to way up on the high top of that list.

So when a ground comes in, if you have to go through a very structured process, they wanted that diesel to be one of the very first things that's looked at so if it had -- knowing that they had the new -- or knowing that they had the old design in there and they were waiting on a new design and that there was that vulnerability, they wanted to be able to quickly identify if a ground occurred on a diesel generator so they could get that fixed and not have another situation where that second ground comes in and the thermal damage occurs.

So the changes to the ground hunting procedures that I talked about really was just a prioritization, not necessarily a structured overall process change of ground hunting.

DR. BLEY: And --

MR. BARCLAY: I didn't mean to imply that, if I did.

DR. BLEY: -- (audio interference) whether EPRI that often chases this stuff has weighed in because of this event and is doing anything. Have you heard anything about what they might be up to in this area?

MR. BARCLAY: I am not aware of anything.

DR. BLEY: Okay. Thank you.

MR. BARCLAY: Yes.

CHAIRMAN HALNON: So, Kevin, did you guys take a look at why this hadn't happened in the last 50 years of operation? I mean, if this has always been over-voltage on it, how -- they've had to have two grounds in the past.

MR. BARCLAY: Well, the new diesel -- this new switch design was installed in 2019. Prior to that I don't believe that design had these metal oxide varistors in it. Prior designs I don't think had the electromagnetic compatibility and some of those new design features that maybe the industry is looking at now. And when you bring some of those design features in associated with electromagnetic compatibility and the surge suppression and some of that stuff on the input power, the ground comes into play where previously the ground may not have even been used on the switch other than maybe for the enclosure.

DR. BLEY: So this is really unintended consequences of what was seen as an improvement at the time?

MR. BARCLAY: Right.

CHAIRMAN HALNON: But do you know if there's an extent of condition done relative to any other improvements made in that same modification or

was this a single modification improvement in 2019?

MR. BARCLAY: I believe this was just a single item that the licensee wanted to pursue based on some operating experience that they became aware of related to electromagnetic interference.

Oh, and Daniel came in there and said that, that was the only change in 2019.

MEMBER BALLINGER: Well, thinking about this, how does this -- I don't know how a white finding gets arrived at or what the -- well, I guess I can. But what I'm thinking is that the ability was give it a white finding for something out of its control, to budget unintended consequences that were unforeseen and maybe could not have been foreseen. Is that correct?

MR. BARCLAY: No.

MEMBER BALLINGER: Where am I wrong here?

MR. BARCLAY: No, for the performance deficiency we're saying that the licensee should have identified this in the modification equivalency evaluation process to look at the vendor drawings for this new design, to look at -- to have discussions with the vendor, to inform them this is the power supply we're going to be putting this into, we have the special three-wire DC distribution system, or

doing those drawing reviews themselves. That should have been done during the equivalency evaluation process and review.

MEMBER BALLINGER: So you're saying it was not done?

MR. BARCLAY: That's correct.

CHAIRMAN HALNON: So Dan Mills has been putting stuff on the chat that's answering specifically the questions. And I have to ask Dan if he would chime up.

Because the chat doesn't go on the record and you're providing some technical information and substantial information. So if you have a comment, I'd appreciate just un-muting and either -- or raising your hand so you can be recognized.

MR. MILLS: Okay. Yes, this is Daniel Mills. I'm sorry. Kevin was doing a great job answering the questions. I had a little bit of additional information related to the question about the speed switch.

In 2019 they had a failure of a station blackout diesel generator speed switch and replaced it. That failure was related to that 2017 Part 21. Having this -- it's a Dynalco speed switch. Having these in stock for the EDGs, later that year in 2019

they replaced the EDG speed switches. And they thought that was a conservative measure to replace all the speed switches in all three diesels. Well, not all the speed switches, but the operative speed switches in the three diesels.

In doing so they replaced an older design speed switch in the two EDGs with this newer Dynalco-type. And it appears that in doing so they introduced this vulnerability that was not present prior.

CHAIRMAN HALNON: Thanks, Daniel.

I guess the question I have that -- I had written down also with what Ron was asking, what was in control and out of control of the licensee, in the equivalency evaluation for this I'd assume that that is the document itself that's under the violation for the design control. Was the documentation provided by the vendor adequate to the level of detail to see this voltage difference in the MOV versus the previous design?

MR. BARCLAY: Not in the material that was added to the equivalency evaluation package. But the point I was trying to make is that that's information that should have been requested by the licensee and reviewed during the design equivalency process.

CHAIRMAN HALNON: Would you expect that

for every component on that board? I mean, it just seems like that level of detail is --

MR. BARCLAY: And Kenn Miller should be on as well and he had previous equivalency -- previous experience with that information as well.

MR. MILLER: Yes, can you hear me? This is Kenn Miller.

CHAIRMAN HALNON: Yes, go ahead.

MR. MILLER: Yes, I'm in the Office of Research. I worked with -- supported Kevin on this inspection. And his presentation has been very good covering this issue.

I would say that -- and my background was -- I was at the Calvert Cliffs plant as a design engineer doing design changes as well as equivalency evaluations like should have been done correctly in this case.

And as far as the detail of the component to be replaced and whether or not they had adequate drawings, as Kevin correctly said, the design engineer needs to be requesting schematics of all the -- full schematics of the components you're putting in so that you can assess that compatibility of that design to the interfacing system, which in this case, as he said, the DC system with its shared -- with its

cascaded batteries and ground detection systems -- that should have all been looked at by the engineer.

And like he said, if they had not provided a detailed drawing of the switch including the varistors, they should have asked for it. I mean, that's fundamental. They've got to have adequate schematics of the device you're putting -- that you're replacing so that you can do a proper initial like-for-like evaluation. Or if it's -- if there's changes, then you have to do an equivalency, which gets into evaluating why the different component is going to be compatible with your design.

So I definitely view that as a failed engineering process and the licensee should have requested that they needed to properly evaluate it.

CHAIRMAN HALNON: Okay. So given that, and of course we're looking through a hindsight 20/20 vision issue, did the process require that, what you just mentioned, to that level of detail or was there -- have to be a change to the process to ensure that there was a comprehensive request for this level of detail?

MR. MILLER: I don't have specific knowledge of their engineering process or procedures, but in general for engineering good practice, yes,

you've got to have adequate -- in this case of electrical equipment schematics of the component along with the schematics of the -- where the component interfaces with your system. And that all has to be looked at. That is standard engineering practice.

So if their processes don't address that or allow for that, then that's -- yes, you're right, that would -- to me, in mind that would be a flawed process. But I don't know that to be the case.

CHAIRMAN HALNON: Okay. And I asked the question, Kenn, because there's -- you didn't highlight any of the corrective actions relative to the process, which is in my mind what fell down on us. I mean, I understand the fundamental engineering thing that Kenn just mentioned, however our nuclear processes don't rely on, especially in this situation, expertise-of-the-craft-type of thing. It goes into what's in the procedure.

So is there any procedural issues that they had to revise to ensure that this was not a continuing problem with their equivalency process?

MR. BARCLAY: I don't know what procedure changes were made from a design perspective. That is something that would likely be looked at from the 95001 perspective next -- August 29th.

I was able to pull some of the words out of the violation and that we -- that I pulled out of the licensee's equivalency evaluation process; they have a procedure and a form they use for that, and some of the questions or discussions in there.

Does the replacement component part have any critical characteristics, material, weight, power requirements, brake horsepower, voltage ranges of operation that are different from the original. Consider that the replacement item's conformance to the original material of construction, structure, internal configuration specification that's standard to the original. Consider the interface to the plant design. And state the basis if applicable and document the differences.

So knowing that they added the electromagnetic compatibility portion and some of that surge protection, there are some generic design aspects that should probably make an engineer question If you're adding some of those features, to go that extra mile and dig deeper into those drawings.

MR. MILLER: That procedure that he -- or that he just quoted there, to me that definitely envelopes exactly what we're saying here in terms of proper engineering practice in assessing a different

component including looking at the drawings of said components to ensure compatibility with your application.

CHAIRMAN HALNON: Well, fundamental to this issue is whether that, which I call a very generalized statement as make sure it's okay, translates into the level of detail of looking at an individual component on circuit card, whether or not it has the compatibility with the voltage.

I can understand you can look back and say yes, it's definitely there, but I'm just questioning whether or not it was interrogated enough during the inspection to see if that was really where the problem was. We've had issues with counterfeit parts in the past. We've had issues with vendors not having their vendor manuals and specs up right. Part 21 obviously was an issue where a vendor was inappropriately not providing the parts they said that they should provide. So they got all these other peripheral issues that could have occurred. I just hope that the inspection interrogated it down to that was the problem.

And I didn't hear that going through this presentation and I don't see that in the final corrective action, so I'm just wondering how much of

a focus that was. Sure, the 95001 will interrogate that, I get that; that's what it's for, but it's a year after the fact. So whatever issue is in that procedure continues on, if in fact that's the problem.

MEMBER BALLINGER: So any lessons learned or things from this would probably be documented in the corrective action? I'm trying to figure out a way not to have this happen again to anybody.

MR. LARA: I think that will be -- this is Julio Lara. As Kevin said and Greg acknowledged, when we complete our supplemental inspection here later this month that -- those are the areas that we should be probing: Corrective actions, extent of condition, needed design control measure changes, process changes. So that's what we expect from the 95001 to address those (audio interference).

(Simultaneous speaking.)

MEMBER BALLINGER: Yes, what I'm saying is I'm sure Davis-Besse knows that now.

MR. LARA: Yes.

MEMBER BALLINGER: But other plants might need -- might benefit from that information.

MR. LARA: Yes, I agree. And I'll add the questions that you're raising, Greg, we spent a lot of time with those very questions. Is it foreseeable?

Should the licensee -- could they prevent it from occurring? We spent a lot of time on that. And at the end we relied upon best available information, judgment. We have a panel of senior managers that at the end makes a call on do we have enough to proceed? Is there a performance deficiency and the like? We spend a lot of time on those questions.

DR. BLEY: Hey, this is Dennis Bley. For the rest of us, tell us what the 95001 is.

MR. LARA: The 95001 is an inspection procedure that is implemented as a follow-up inspection to any inspection finding that was determined to be of white risk significance. So once we issue that inspection finding of white significance, we issue that and make that publicly available. The licensee takes a look at that and then they will inform us when they are ready for us to conduct that inspection procedure. The procedure, the criteria that's within is publicly available.

And once they inform us their readiness, then we will schedule our inspections to confirm/verify that they have addressed the underlying cause of the issue, corrective actions, extent of conditions. And then we use that inspection outcome to make a determination of whether or not we can move

them back to the -- a column placement, if you will, to a different column of the action matrix, or otherwise close that issue on its own.

DR. BLEY: Okay. I've got a question for Kenn, I think. I kind of agree with everything you've been saying. And I haven't been through this equivalency process at a detailed level; I do have an electrical background, but I would think if you hit the point where you see there's something different and you have to go in and analyze whether there's a problem, you're essentially doing a review like you would for an original license. And all of the IEEE standards that apply at that point would apply here, too. Is that correct?

MR. MILLER: You mean in terms of doing the engineering evaluation?

DR. BLEY: Yes, the detail at which you have to do this evaluation. I'm looking for something that points to exactly what you were saying as to why this is important and I -- good engineering practice is a high-level thing, but I think some of those IEEE standards for which you have to look for at the design and new equipment -- probably get into the detail Greg was pushing at.

MR. MILLER: Yes, I don't -- I'm not sure

I would necessarily say that an IEEE standard especially addresses this particular issue here with the varistors or the design of the switch, but it certainly is again fundamental in terms of you're doing an engineering review of a replacement component. And the first thing you do is look at it and decide is it a like-for-like component, which in this case it clearly wasn't like-for-like, which now means you're into the equivalency evaluation, which is the engineering process. And when you get into --

DR. BLEY: Which means --

MR. MILLER: -- the engineering process --

DR. BLEY: You have to look for failures, right?

MR. MILLER: Pardon?

DR. BLEY: Which means you have to look for potential failures that are unique to this compared to your original design?

MR. MILLER: Well, okay. But I'm just saying what you're really doing then is you're assessing what's different about this new component and is it compatible with your design including the interfacing system that it's connected to.

In this case the varistor, which normally would see 125 volts on a 125-volt system -- but

because this was a cascaded battery system with a ground detection circuit it introduces this other voltage divider which -- and higher voltage which makes that design of that switch incompatible in terms of the application of voltage to that varistor.

So again that's getting into the specifics of the equivalency evaluation of that particular switch and its interface with that -- with the plant's design, which the engineer has to look at. You can't just throw a switch in without looking at those details. You have to answer those questions, which would include looking at the resulting schematic with that switch connected to that DC system and how those grounds and voltages impact all the components in the switch. And that's to -- the outcome of that is a proper design and then you don't get the kind of failure that happened in this case where you've got a device that's being constantly over-voltaged.

MEMBER BIER: So, this is Vicki Bier again and getting back to my earlier question, it seems like it might be worth a little bit of digging to see whether this was a one-time goof by one engineer or whether there is kind of a general practice in the engineering department of saying, ah, the-vendor-said-this-is-fine- so-we'll-accept-it-type of thing. So

there's no way from one incident.

MR. MILLS: This is Daniel Mills. I'd like to respond to that. That's a concern that all inspectors have in general, certainly something that the resident inspectors -- myself and Russ Kosera, the resident, have focused on over the last -- well, at least 18 months, and we haven't identified that as a -- I guess a trend. And at this time we don't have any evidence that that is a problem organizationally at Davis-Besse. But it is something that we are focused on.

MEMBER BIER: Excellent. Thank you very much.

CHAIRMAN HALNON: Other questions/comments?

(No audible response.)

CHAIRMAN HALNON: Good discussion. Okay. With that, I'm going to adjourn the open session and we will transition to the closed session. It is about 2:00 right now Central Time. We will start back up at 2:20 Central Time in the closed session. 2:20. So we're in recess until 2:20 until we enter the closed session. Thank you.

(Whereupon, the above-entitled matter went off the record at 2:58 p.m.)

U.S.NRC
United States Nuclear Regulatory Commission
Protecting People and the Environment

RIII Experience with Risk-Informed Technical Specifications

Laura C. Kozak
Senior Reactor Analyst
Region III

RIII Risk-Informed License Amendments

Site	Surveillance Frequency Control Program (SFCP)	50.69	Risk-Informed Completion Time (RICT)	NFPA 805	Seismic PRA (Fukushima action, not a LAR)
Clinton	Y	Y	Y		
Dresden	Y				Y
LaSalle	Y	Y	Y		
Quad Cities	Y				
Davis-Besse	Y			Y	
Perry	Y				
Braidwood	Y	Y	Y		
Byron	Y	Y	Y		
Monticello	Y	Y	Y		
Prairie Island	Y	Y	Y	Y	
DC Cook	Y			Y	Y
Fermi	Y				
Point Beach	Y	Y	In progress	Y	
Total	13	7	6 (1 in-progress)	4	2

RIII Experience - Inspections

- Baseline Inspections
  - Maintenance Risk Assessment and Emergent Work
  - Surveillance Testing
  - Fire Protection
  - Maintenance Rule
  - Equipment Alignment
  - Plant Modifications
- Special and Infrequently Performed Inspections
  - 10 CFR 50.69 Risk-Informed Categorization and Treatment of Structures, Systems, and Components Inspection

RIII Experience - Observations

- No significant safety issues identified with implementation
- Risk-Informed Technical Specifications is allowing desired operational flexibility
  - Reduced need for NOED
  - Allows significant modifications without multiple LCO entries
- 50.69 implementation different than envisioned by inspection program – limited system categorization, one alternate treatment observed, more “on-demand” than anticipated

PRA Use in Inspections

Frequently Used PRA Tools:

- SPAR model – Plant Risk Information E-Book (PRIB)
- Licensee Risk Information (PRA notebooks, importance measures)
- Interface with licensee PRA staff

Risk Insights/PRA Information Used to:

- Development of baseline inspection program
- Inspector selection of specific inspection samples
- Inform level of effort/focus areas
- Assess significance of findings (Significance Determination Process)
- Evaluate the need for reactive inspections (MD8.3)

Assessment of Licensee Capabilities

- NRC ROP does not directly inspect/assess licensee PRA capabilities
- Some observations/findings developed during inspection provide insights into licensee capabilities
- All RIII licensees have:
  - Internal events/internal flood model
  - On-line risk model/software
  - Method for shutdown risk management
  - Trained PRA staff
- Significant variability observed:
  - Size of PRA staff
  - External event models
  - Fire PRA capabilities

U.S.NRC
United States Nuclear Regulatory Commission
Protecting People and the Environment

Reactor Oversight Process Changes, Enhancements, Cumulative Effect of Changes in Last 5-8 Years

Julio Lara
Director
Division of Reactor Projects

Program Changes and Adjustments

- Plant Assessment Action Matrix (2015) - changed to definition of Column 3
  - Changed from “two” to “three” White inputs in a cornerstone
  - Column 3 - One Degraded Cornerstone (3 White inputs or 1 Yellow input), or any 3 White inputs in a strategic performance area
  - Changes did not have an adverse impact on safety or agency assessment

- Very Low Safety Significance Issue Resolution (VLSSIR)
  - All Regions: 14; RIII: 2

- Approval of Risk-informed initiatives
  - Need to increase Regional focus on risk principles and oversight

- ROP Implementation
  - Between 2015 and 2018, drop in number of findings from 816 to 476, a 42 percent reduction
  - Most likely attributed primarily to implementation of the ROP
    - efforts to improve regional consistency
    - increased engagement by industry in the findings process
    - outcomes related to the agency’s initiatives on backfit

Cumulative Effect of Changes and Region III Focus

Oversight

- Support inspection findings with consistent application of ROP
- Utilize program tools to disposition findings of low-risk significance
- Regulatory footprint on oversight of risk-informed initiatives
- Continue work to support agency goal of "modern, risk-informed regulator"

U.S.NRC
United States Nuclear Regulatory Commission
Protecting People and the Environment

Inspector Insights

Jorge Corujo-Sandín
Senior Reactor Inspector, Engineering Branch 2
Christopher Hunt
Senior Resident Inspector, Quad Cities Power Station

Topics

- How were the remote inspections during the pandemic conducted to assure adequate safety was being maintained?
- What pandemic-remote practices are carrying over into the routine way of doing business?
- How are inspectors keeping current on topics such as advanced technology for monitoring, transmission of data, PRA methods, reporting of issues, and innovation?

Pandemic Inspection Activities

Resident Inspectors' Perspectives

- No more than three consecutive working days without at least one qualified inspector on site (IMC 2515)
- Communication between resident and senior resident key
  - Staggered coverage
  - Person on site performed any required in-person follow-ups/walk downs
  - Resident team supported DRS inspections as needed

Pandemic Inspection Activities

Resident Inspectors' Perspectives

- Teams/Technology
  - Most licensee meetings went to Teams as most licensee staff not in the Operations Department shifted to remote work.
  - The synergies of Teams facilitated easier access to licensee staff for questions and follow up items
- Regional meetings shifted to Skype at first, and then Teams
  - Provided a standard of communication
  - Allowed for document sharing and presenting not available via phone

Pandemic Inspection Activities

<u>Resident Inspectors' Perspectives</u>

- Licensees provided laptops and/or web portals to access key licensee databases remotely
  - Logs, engineering evaluations, and CAP reviews remained unaffected since both were done via licensee computers before and during the Pandemic.
  - Paperwork that wasn't digitized was reviewed during the next onsite coverage day in the office.

Pandemic Inspection Activities

<u>Traveling Inspectors' Perspectives</u>

- Regional Based Inspections during the pandemic varied depending on several factors, including:
  - Level of on-site presence of Inspectors
    - FULL Remote
    - Day Trip(s)
    - Hybrid
    - FULL On-site Presence (pre-pandemic standard practice)

Pandemic Inspection Activities

Traveling Inspectors' Perspectives

- Access to technology and familiarity/comfort with its use.
  - Microsoft TEAMS
  - Office 365 (sharing/collaborating tools)
  - Access to cloud based bulk file sharing (BOX, Certrec, etc.)
- Pre-Established professional relationships amongst the team and with the licensee, if any.
  - On occasions inspectors never met face-to-face with their licensee counterparts nor their NRC team members.
  - Establishing and maintaining overall synergy of the inspection team was a challenge

Pandemic Inspection Activities

Traveling Inspectors' Perspectives

- It is crucial the entire inspection team adopts and uses to fullest the available technology tools.
- Validation and verification (e.g. field configurations) can be achieved via proper coordination of on-site visits.
- Majority of documents available to the typical on-site inspector can be available to the remote inspector (with some key exceptions).

Best Practices Carried Forward

- Adoption of Microsoft TEAMS
- Maximize the use and access to cloud based bulk file sharing (BOX, Certrec, etc.)
- Inspection questions can be submitted in writing directly to the licensee via e-mail
- Some groups have now added the practice of getting inspection preparation material prior to the on-site portion

Knowledge Management

- Power Reactor Issue Safety Meeting (PRISM)
- DRS Inspector Debriefs
- KM Sessions
  - RIII - Inspectors Guide to Universal Knowledge
- Regional Utility Group Meetings
- External Training “182 Training”
- Nucleopedia
- Risk Café
- Working Groups
- Use of Teams for reaching out to branch members and other inspectors

U.S.NRC
United States Nuclear Regulatory Commission
Protecting People and the Environment

Reactor Fuel Performance in Region III

Billy Dickson
Deputy Division Director (Acting)
Division of Reactor Projects

Reactor Fuel Performance (Region III)

There have been no overarching safety concerns related to reactor fuel performance or reliability in Region III.

- Reliability improvement initiatives developed by reactor fuel vendors and licensees over the last decades have lowered the number of leaking fuel rods.
- Within the region, advances in plant operators' ability to detect, locate and suppress these leaking fuel rods early have significantly reduced the number of gross rod failures over the last two decades.
- Debris leading to fretting (dominant fuel failure mechanism noted in BWRs), grid-to-rod fretting, and baffle bolt/jetting leakers (especially in the downward flow plants) remain challenging.
  - Licensees have noted small leakers during some recently completed operating cycles. (e.g., Perry, LaSalle, Clinton)
    - New debris filters are being introduced in fuel assemblies.
    - Increase worker sensitivity and procedure improvements related to foreign material, such as during maintenance activities.
- No PCI or PCMI-related fuel leaker was identified in Region III within the last five years.

Reactor Fuel Performance (Region III)

Each year, each fuel vendor has a meeting with NRR/DSS technical staff to present this information to ensure that any adverse trends can be quickly and appropriately treated.

U.S.NRC
United States Nuclear Regulatory Commission
Protecting People and the Environment

Perspectives & Areas of Focus

Mohammed Shuaibi
Deputy Regional Administrator
Region III

Overall Perspectives

- Plant Performance – Most Under "Licensee Response" column of Action Matrix

- Assess plant performance and cross-cutting issues during End-of-Cycle Meetings
  - Adjust inspection plan accordingly (samples)

- Some licensees incorporating risk-informed initiatives
  - Operational flexibility while managing risk
  - Licensees implementing initiatives appropriately

- Region III focus on advancing risk-knowledge and oversight
  - Monthly Risk Cafés – risk principles and Be riskSmart
  - Risk insights a part of all discussions and decision-making
  - Tools available for inspectors and supervisors

- Trends in inspection findings

Findings Trend – Region III

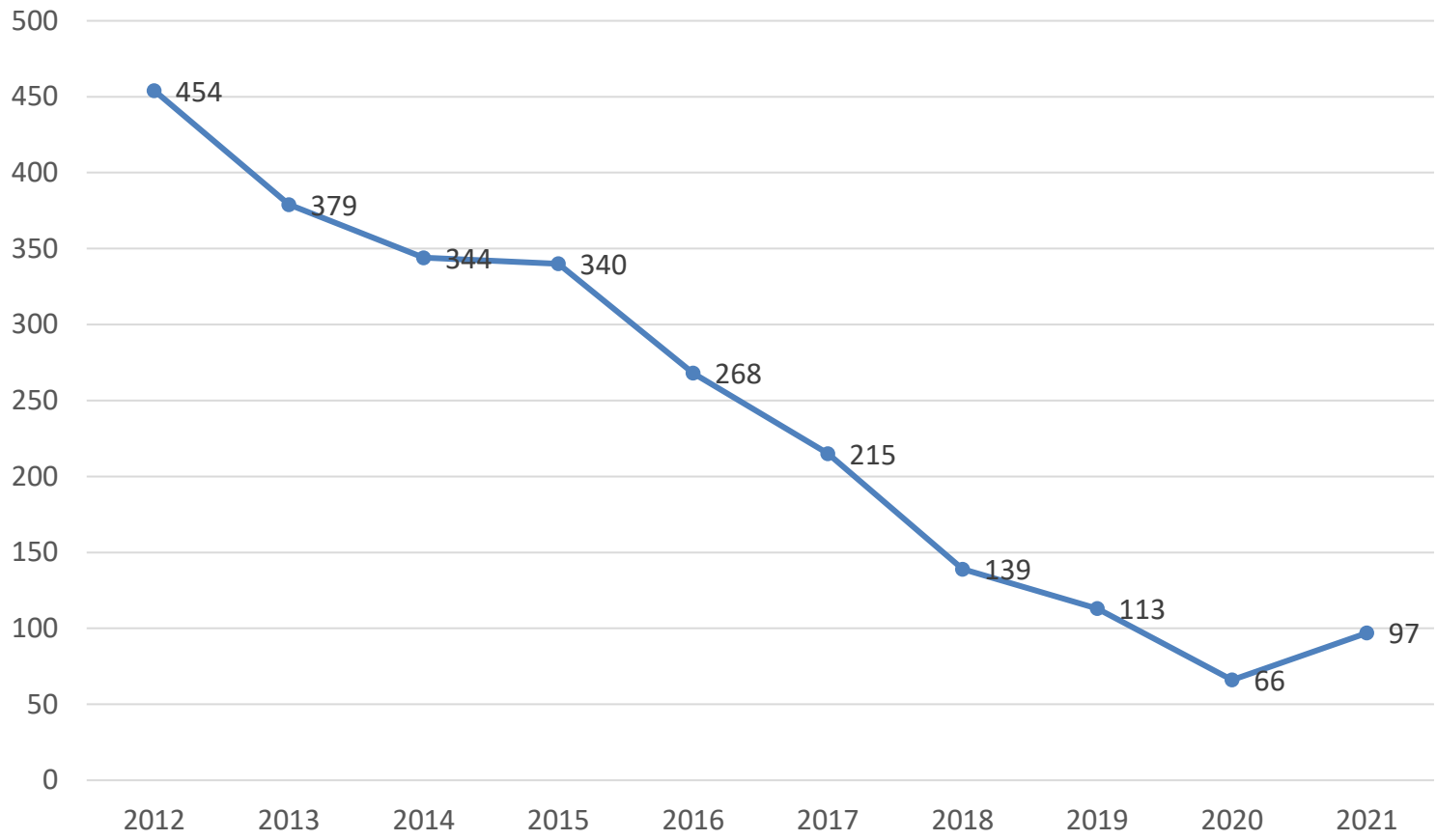

U.S.NRC
United States Nuclear Regulatory Commission
Protecting People and the Environment

Findings Trend – All Regions

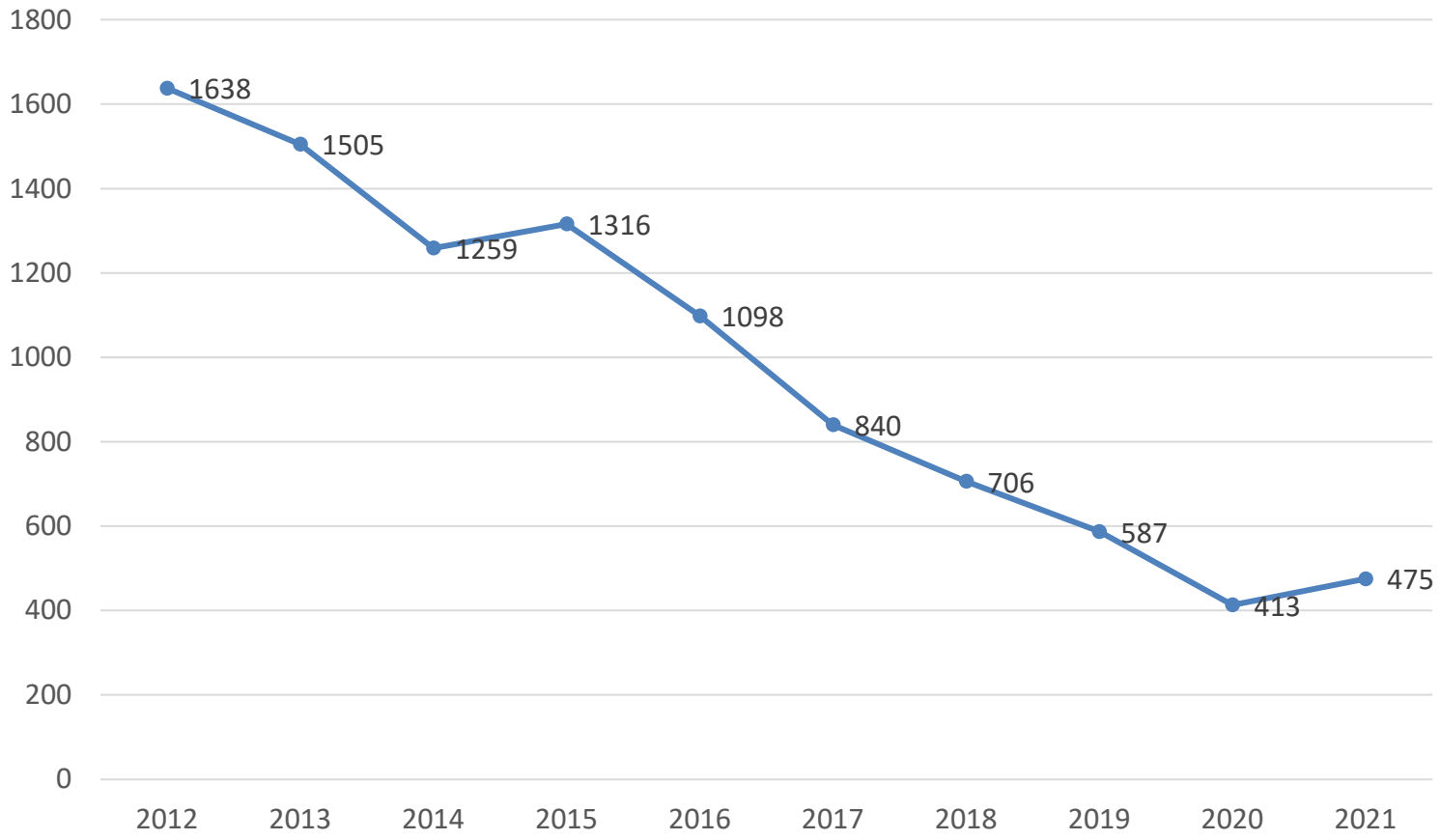

U.S.NRC
United States Nuclear Regulatory Commission
Protecting People and the Environment

U.S.NRC
United States Nuclear Regulatory Commission
Protecting People and the Environment

Davis-Besse Emergency Diesel Generator Speed Switch Failure

Kevin Barclay
Reactor Inspector
Division of Reactor Safety

Event Summary - September 4, 2020

- EDG 1-2 failed to start during the monthly technical specification surveillance test (slow-start test)
- Licensee troubleshooting found thermal damage to the EDG speed switch
- Licensee replaced the speed switch and restored the EDG to an Operable status on September 7, 2020

Speed Switch Function

- Speed switch operation is necessary for the EDG to perform its safety-related function
- Actuates relay contacts at discrete speed setpoints to properly sequence start-up and shutdown activities
- Inputs
  - 125 Vdc
  - Speed Sensor

  Outputs
  - Speed Signal
  - Relay Contacts (4 sets)

Speed Switch Function Examples

- Air Start System
  - Disengage starting air motors when specified speed is reached
- Start EDG Room Ventilation Fans
- Flash Generator Field
- Trouble Alarm / EDG Lockout
  - EDG doesn’t reach speed / time milestones

EDG 1-2 Failed Speed Switch

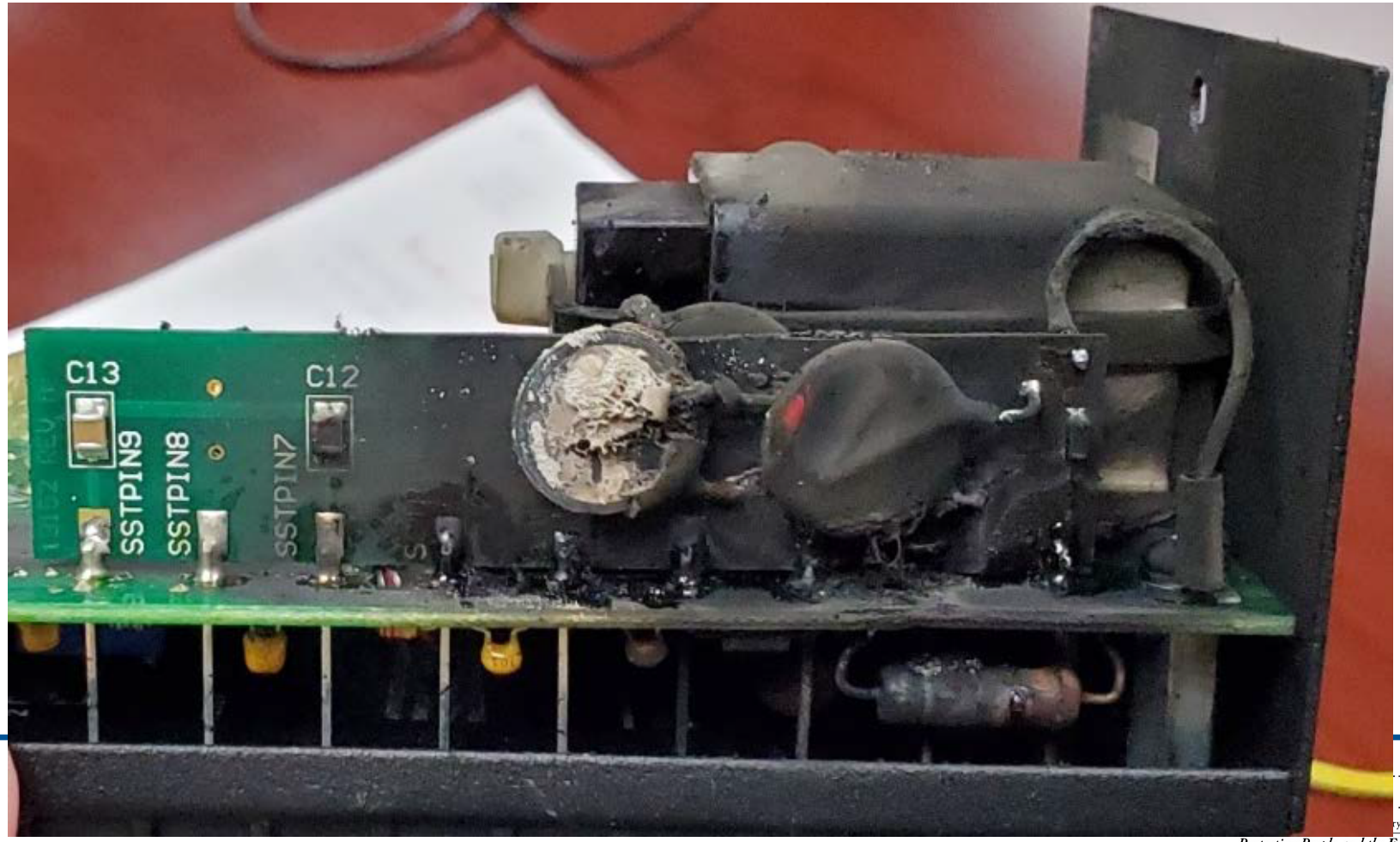

Initial Licensee Findings

- Failed after only ten months in-service
  - Installed October 2019
- External vendor inspection found excessive damage at the input power section of the speed switch
- Vendor concluded failure may have been related to the power supplied to the switch

Initial Licensee Findings

- Licensee performed a historical review of the 125 / 250 Vdc system performance
- Licensee concluded:
  - A speed switch component shorted to ground coincident with a separate independent ground on the same DC Bus.
- The two grounds allowed excess DC current to flow and damaged the speed switch.

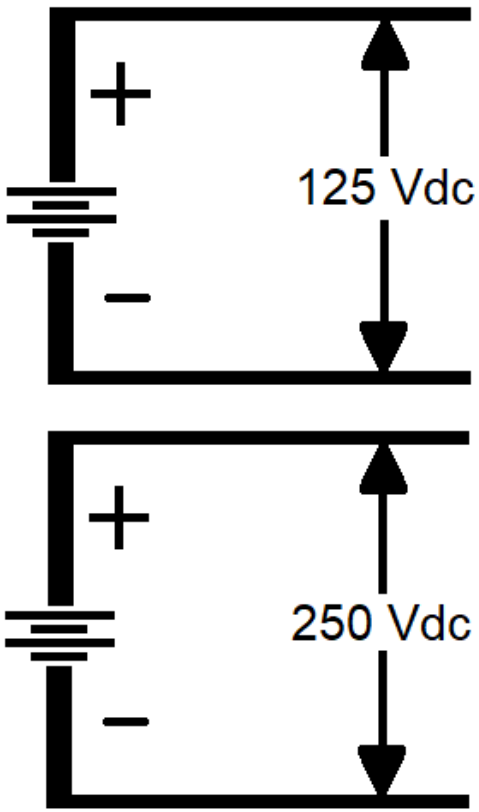

Single Voltage
Independent Batteries
(Common Design)

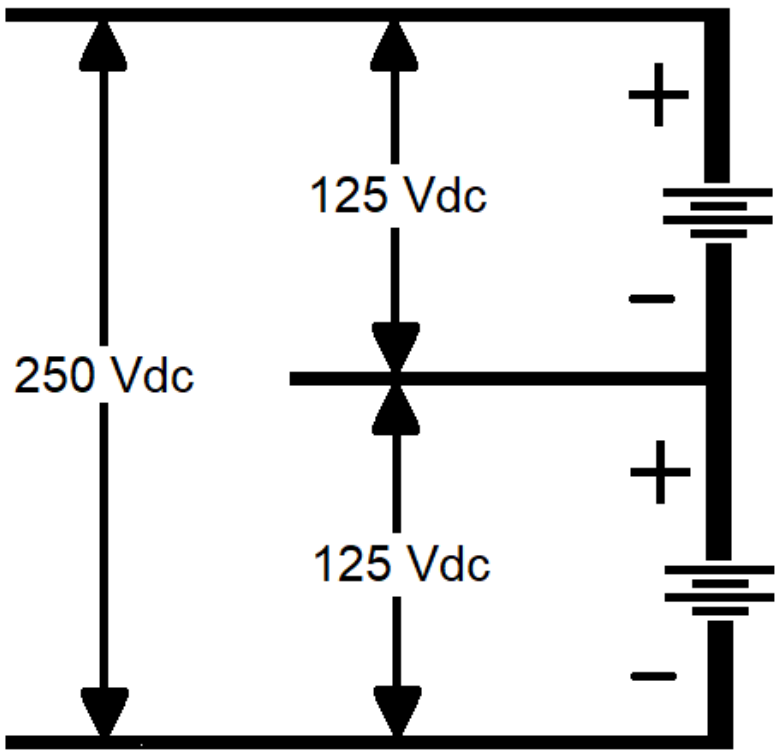

Dual Voltage
Combined Batteries
(Uncommon Design)

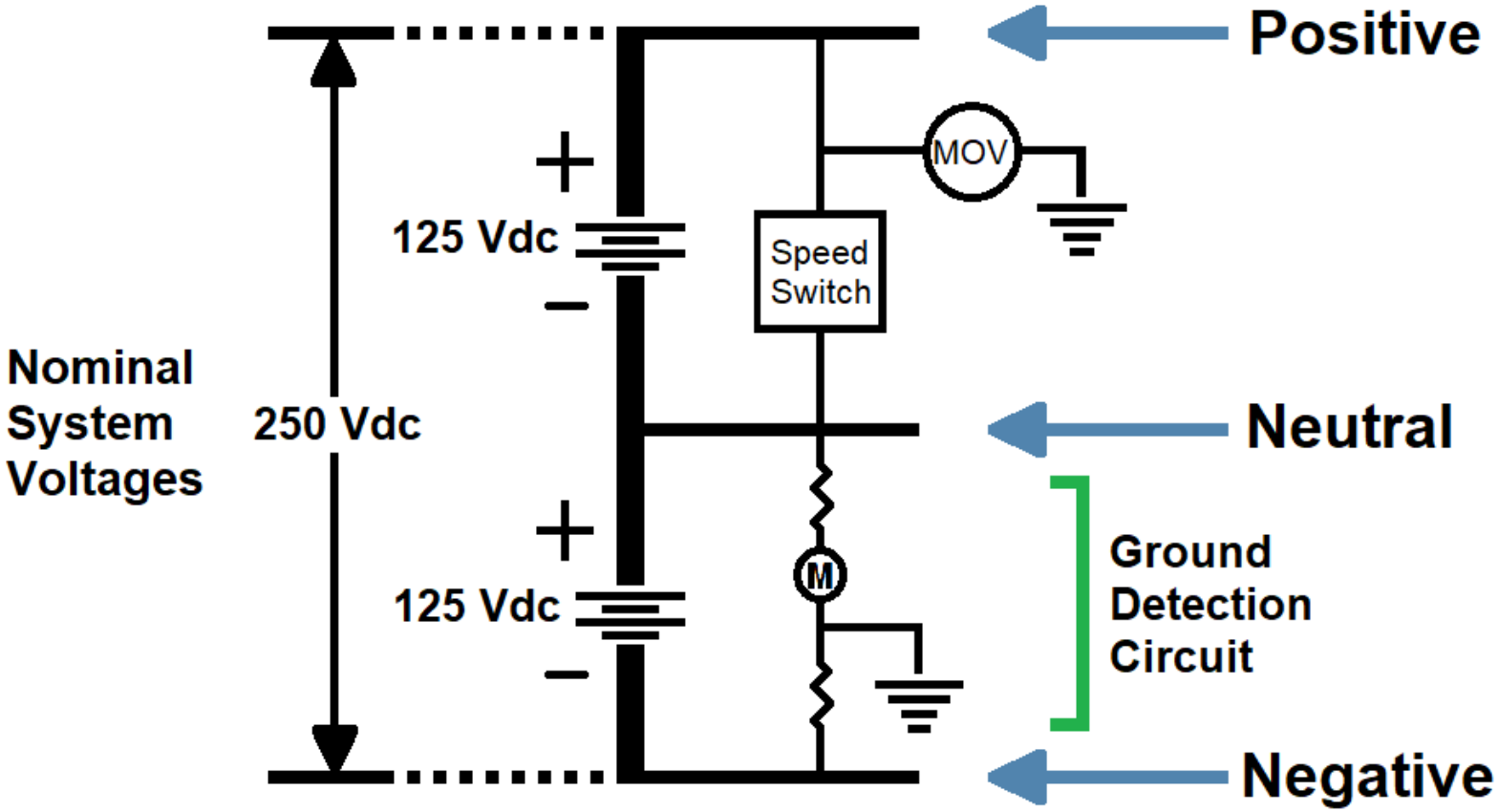

DC Motor Contol Center (DCMCC) 2

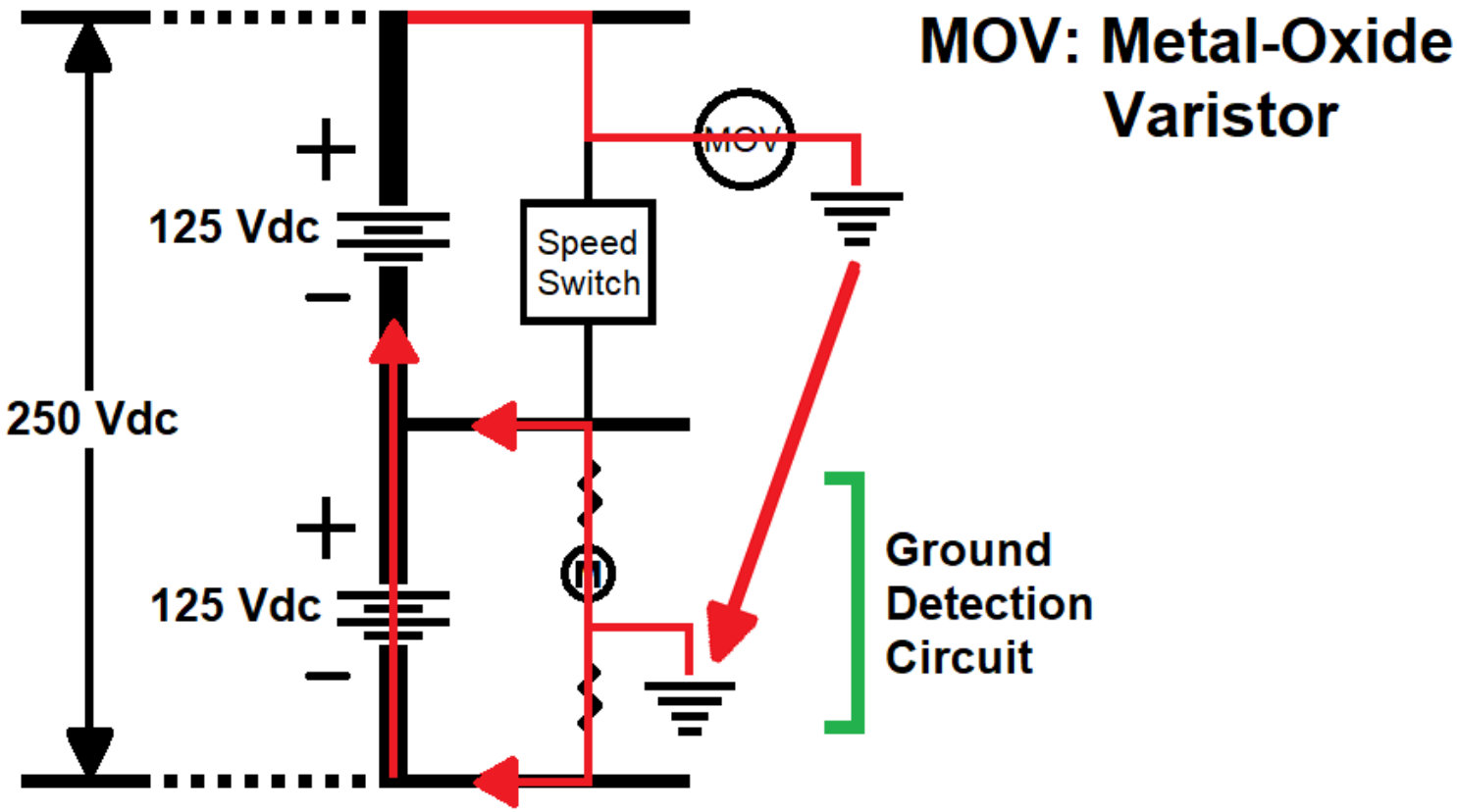

DCMCC 2 - MOV Short Circuit / Ground

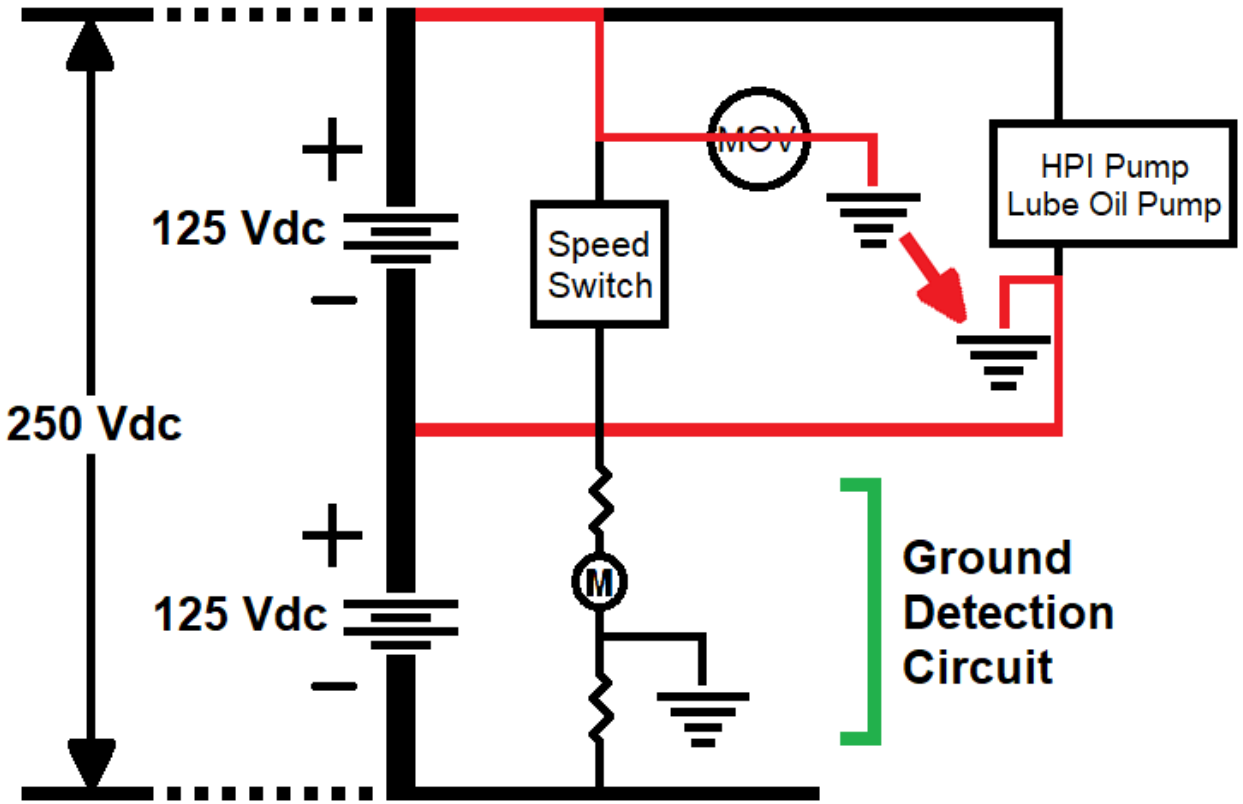

DCMCC 2 - Second Ground (Lube Oil Pump)

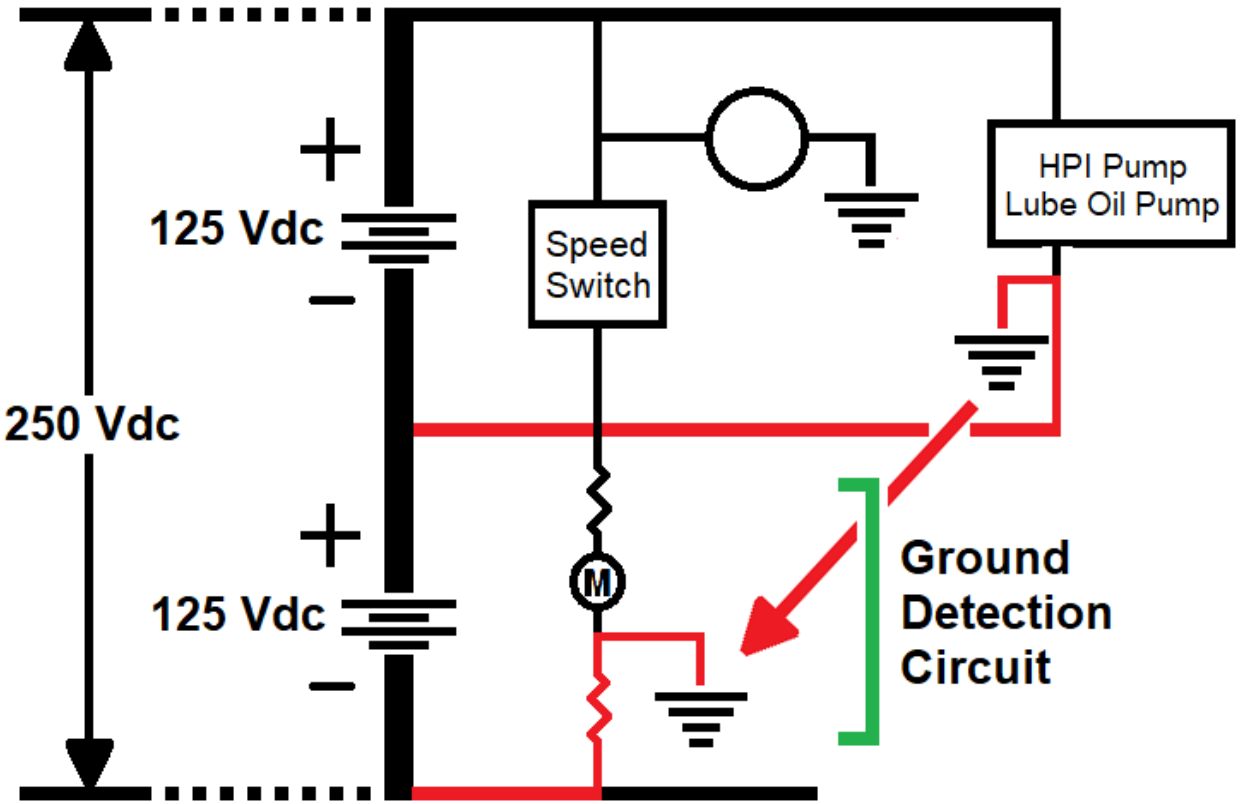

DCMCC 2 - Post MOV Damage

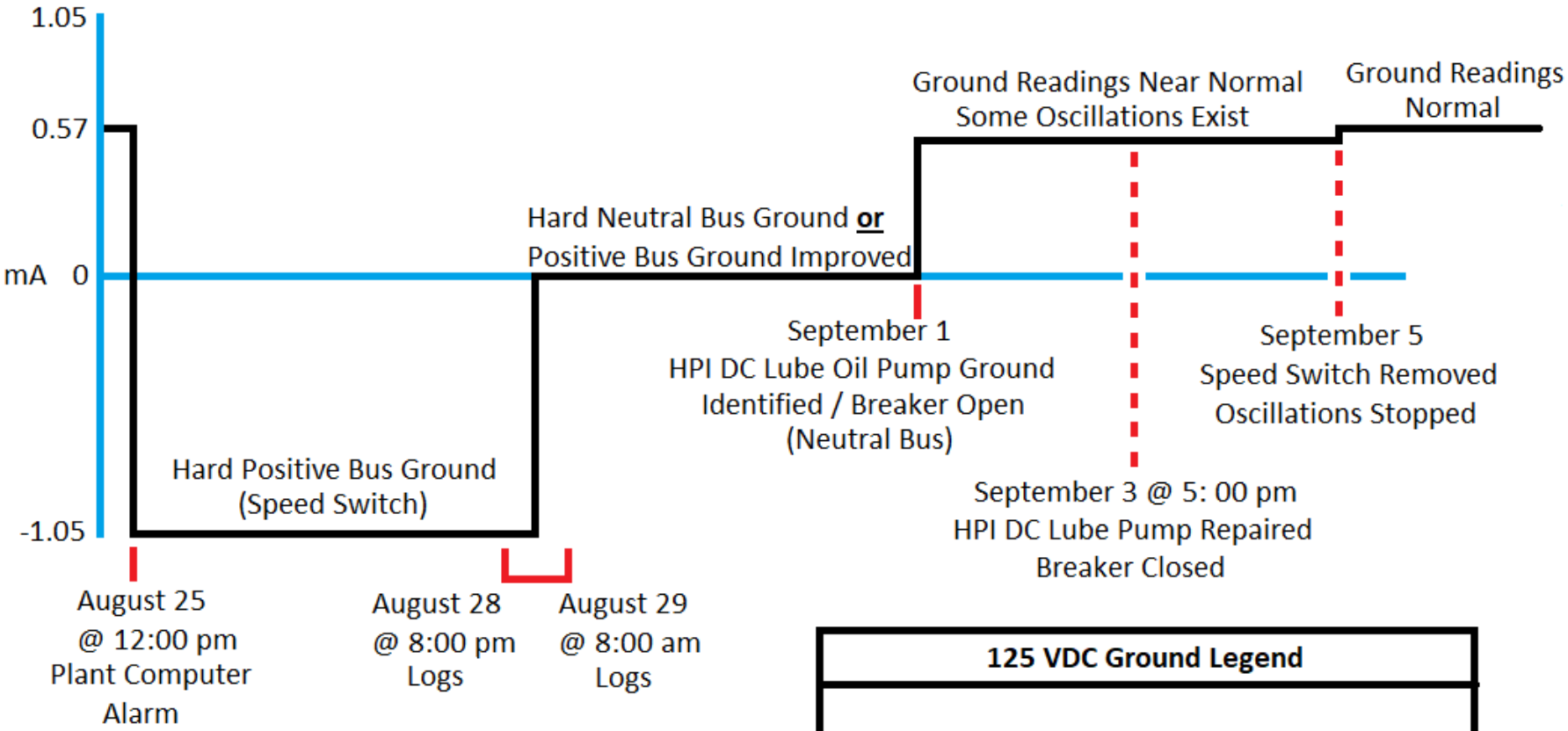

125 VDC Ground Legend

No Grounds (+ 0.57 mA)
Negative Bus Ground (+ 0.80 mA) to **(+ 1.05 mA)**
Positive Bus Ground (+ 0.40 mA) to **(- 1.05 mA)**
Neutral Bus Ground (+ 0.40 mA) to **(0 mA)**

***Bold Indicates Hard Ground (max current flow)**

Conclusions

- Initial Conclusions
  - Random / early life failure of a speed switch subcomponent created the electrical short / ground
  - Speed switch replacement resolved issue
  - LER 05000346 / 2021-001 (April 2021)
- Revised Conclusions
  - Speed switch design not compatible with DC dist. system
  - MOV rated for 170 Vdc was exposed to approx. 201 Vdc
  - MOV likely failed (shorted) from the over-voltage condition
  - Drivers for updated conclusions:
    - Licensee's EDG Reliability Study / Pre-SIT NRC Questions

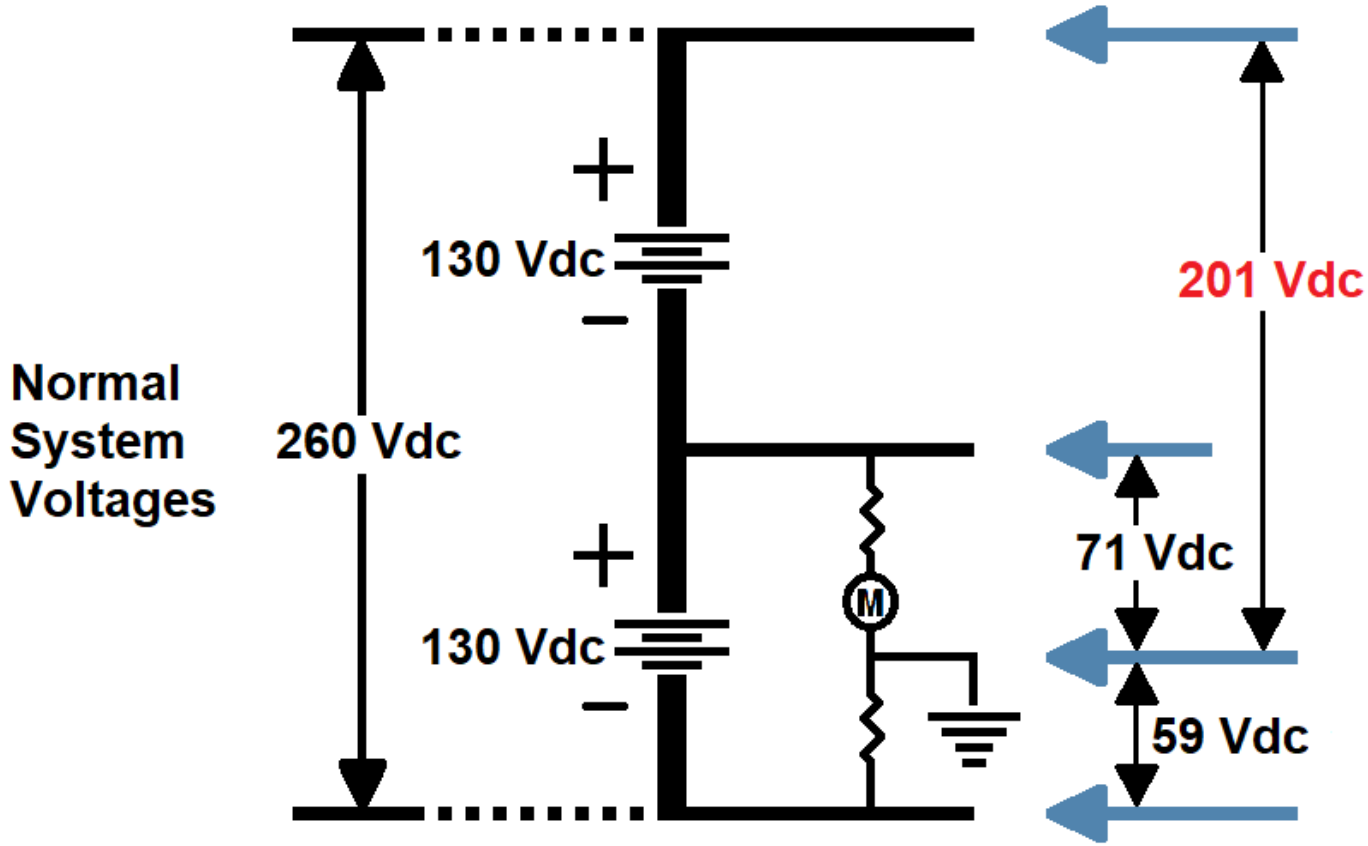

DC Motor Contol Center (DCMCC) 2

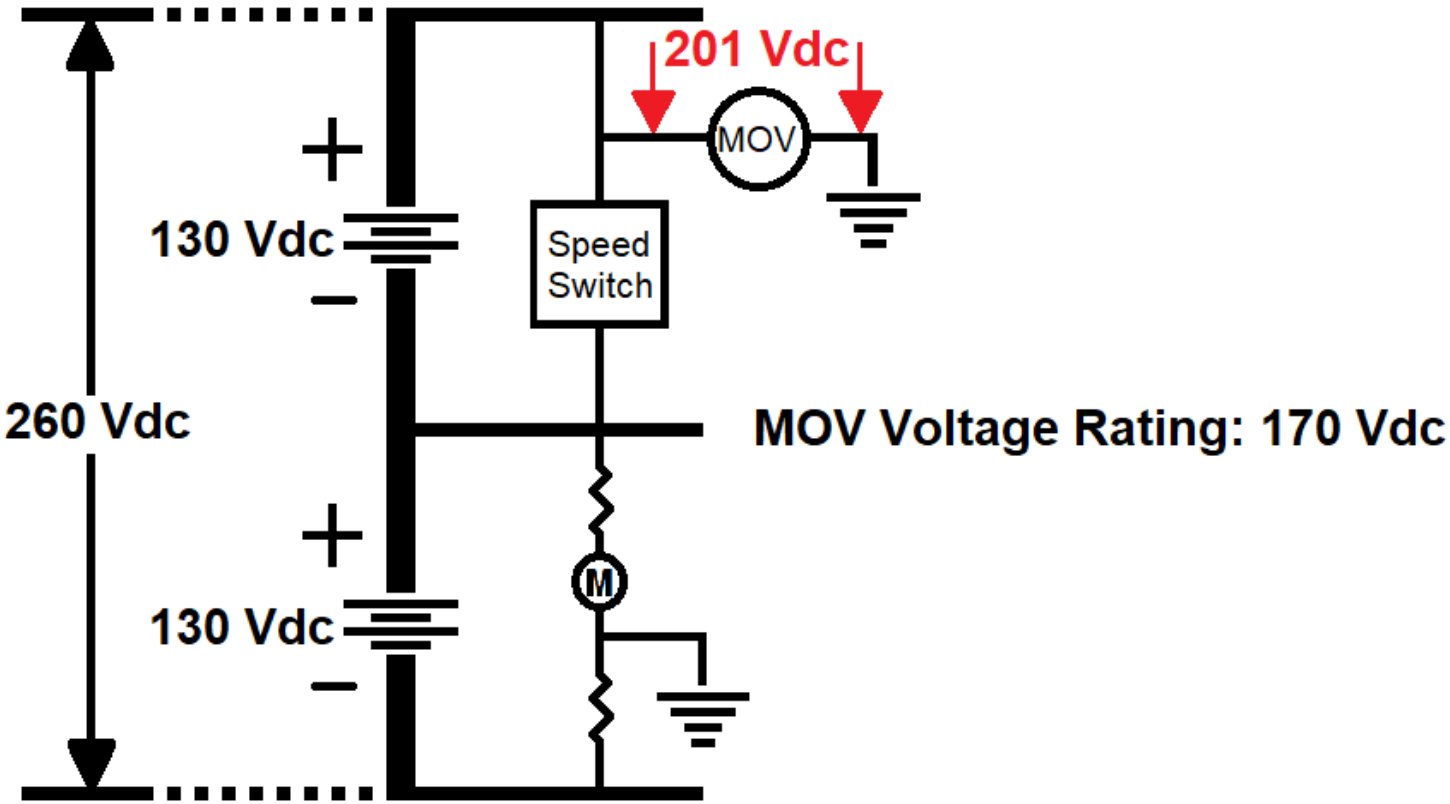

DC Motor Contol Center (DCMCC) 2

Performance Deficiency / Finding

- The licensee failed to select a speed switch replacement that was suitable to the application.
- The licensee failed to evaluate how the electromagnetic compatibility portions of the speed switch circuit interfaced with the existing plant design in its equivalency evaluation process.
- The relevant information should have been identified through:
  - vendor drawing reviews
  - discussions with the vendor, or
  - providing the speed switch vendor with plant design information associated with the station's hybrid three-wire DC distribution system.

Violation

- Title 10 of the Code of Federal Regulations (CFR) Part 50, Appendix B, Criterion III, “Design Control”
  - Licensee failed to establish measures for the selection and review for suitability of application of parts, that are essential to the safety-related functions of the Division 1 and 2 EDGs speed switches. Specifically, the licensee failed to establish the required voltage potential specifications for the positive DC bus to ground and the neutral DC bus to ground.

- White Finding
  - Exposure Time: 9 days
  - Evaluated As EDG 1-2 Fails To Start

Corrective Actions

- Interim Corrective Actions
  - Operations Department Ground Hunting Procedures Updated To Prioritize EDGs
  - Both Speed Switches Replaced
  - Implemented a Six-Month Speed Switch Replacement Frequency
- Final Corrective Actions
  - Licensee Installed Speed Switch Models Compatible With DC Distribution System
  - Switch Installation Completed Early 2022

Supplemental Inspection

- Inspection Procedure 95001: “Supplemental Inspection Response To Action Matrix Column 2 (Regulatory Response) Inputs”
- Scheduled: August 29, 2022

Public ADAMS Documents

- Licensee Event Report **ML21105A489**
- Special Inspection Report **ML21321A365**
- Preliminary White Finding **ML21340A221**
- Final Determination Letter **ML21356A058**
- Supplemental Inspection Notification and Request For Information **ML22202A052**