TENNESSEE
VALLEY
AUTHORITY

Post Office Box 2000, Spring City, Tennessee 37381-2000

WBL-22-034

August 1, 2022

10 CFR 50.4
10 CFR 50.71(e)

ATTN: Document Control Desk
U.S. Nuclear Regulatory Commission
Washington, D.C. 20555-0001

Watts Bar Nuclear Plant, Units 1 and 2
Facility Operating License Nos. NPF-90 and NPF-96
NRC Docket Nos. 50-390 and 50-391

Subject: **Watts Bar Nuclear Plant, Units 1 and 2 - Update to Fire Protection Report Figures**

References:
1. TVA letter to NRC, WBL-22-015, "Watts Bar Nuclear Plant (WBN) Units 1 and 2 – Update to Fire Protection Report," dated May 11, 2022
2. TVA letter to NRC, CNL-15-256, "Watts Bar Nuclear Plant (WBN) Units 1 and 2 - Transmittal of Unit 1/Unit 2 Fire Protection Report," dated December 21, 2015

In Reference 1, the Watts Bar Nuclear Plant (WBN) Fire Protection Report (FPR) was submitted in accordance with Title 10 of the Code of Federal Regulations (10 CFR) 50.71(e). Subsequent to the submittal of this report, it was identified that updated Figures associated with the FPR had not been submitted since the Reference 2 submittal. Figures updated since the Reference 2 submittal are provided in the enclosure. Accordingly, this letter supplements information provided in the Reference 1 submittal. This issue has been added to the site corrective action program.

Tennessee Valley Authority (TVA) has reviewed this revision for redaction as indicated by Regulatory Issue Summary 2015-17, "Review and Submission of updates to Final Safety Analysis Reports, Emergency Preparedness Documents, and Fire Protection Documents," dated December 23, 2015, using the criteria provided by the Nuclear Regulatory Commission in SECY-04-191, "Withholding Sensitive Unclassified Information Concerning Nuclear Power Reactors From Public Disclosure" dated October 19, 2004. Based on the criteria provided for FPRs, the enclosed drawings have been determined not to be security sensitive and are not subject to withholding.

There are no new regulatory commitments contained in this letter. Please direct any questions concerning this submittal to Jonathan Johnson, WBN Licensing Manager, at jtjohnson0@tva.gov.

I certify that I am duly authorized by TVA, and that, to the best of my knowledge and belief, the information contained herein accurately presents changes made since the previous submittal, necessary to reflect information and analyses submitted to the Commission or prepared pursuant to Commission requirements.

Respectfully,

Anthony L. Williams IV
Site Vice President
Watts Bar Nuclear Plant

Enclosure:

Fire Protection Report Figures

cc (wo/Enclosure):

NRC Regional Administrator - Region II
NRC Senior Resident Inspector - Watts Bar Nuclear Plant
NRC Project Manager – Watts Bar Nuclear Plant

ENCLOSURE
Tennessee Valley Authority
Watts Bar Nuclear Plant
Units 1 and 2

Fire Protection Report Figures

Figure II-1A
Figure II-2A
Figure II-3A
Figure II-7A
Figure II-9A
Figure II-10A
Figure II-11A
Figure II-12A
Figure II-17A
Figure II-21A
Figure II-22A
Figure II-23A
Figure II-25A
Figure II-26A
Figure II-28A
Figure II-30A
Figure II-32A
Figure II-35A
Figure II-36A
Figure II-41A
Figure II-43A
Figure II-46A

CAD MAINTAINED DRAWING

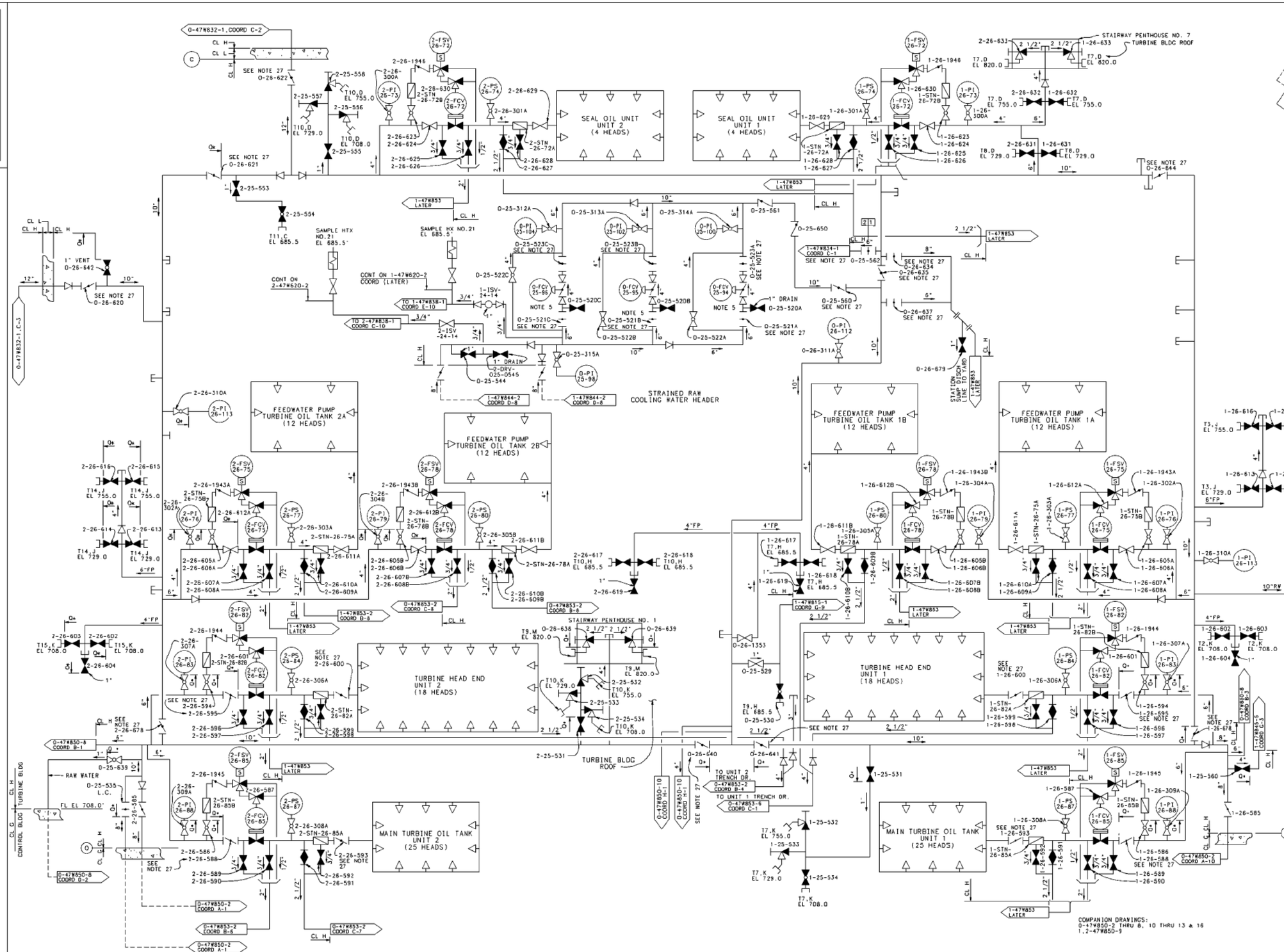

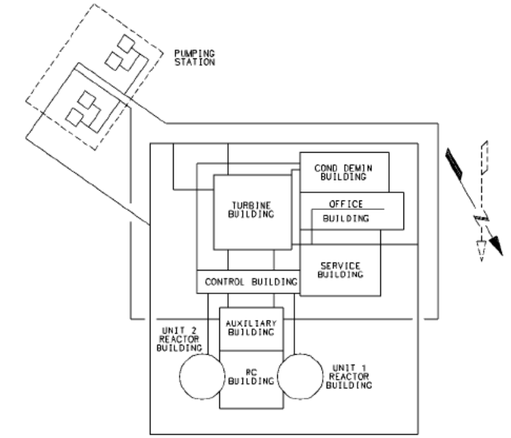

KEY PLAN
NOT TO SCALE

NOTE:
1. ALL ROOT VALVES HAVE AN "A" SUFFIX (NOT SHOWN) IN THE ADDRESS FIELD TO COMPLETE THE COMPONENT IDENTIFICATION CODE.
2. ALL PIPING SHOWN ON THIS DWG IS TVA CLASS H EXCEPT AS NOTED.
3. FOR GENERAL NOTES & REFERENCE DWGS SEE 0-47W850-2.
4. NOT USED.
5. THE VALVES 0-FCV-25-94, 95, & 96 HAVE BEEN DISABLED IN THE "OPEN" POSITION BY DCN M-20905-A.
6. 12 THIS IS A NON-SAFETY RELATED INTERFACE POINT. INTERFACE POINT MUST BE CLOSED WITH HAND WHEEL REMOVED.

THIS DRAWING SUPERSEDES CONFIGURATION CONTROL DRAWINGS 1-47W850-1 R29 & 2-47W850-1 R4

UFSAR AMENDMENT 4

WATTS BAR
FIRE PROTECTION
REPORT

TURBINE BUILDING
FLOW DIAGRAM
FIRE PROTECTION &
RAW SERVICE WATER
FIRE PROTECTION REPORT
TVA DWG NO. 0-47W850-1 R7
FIGURE II-1A

CAD MAINTAINED DRAWING

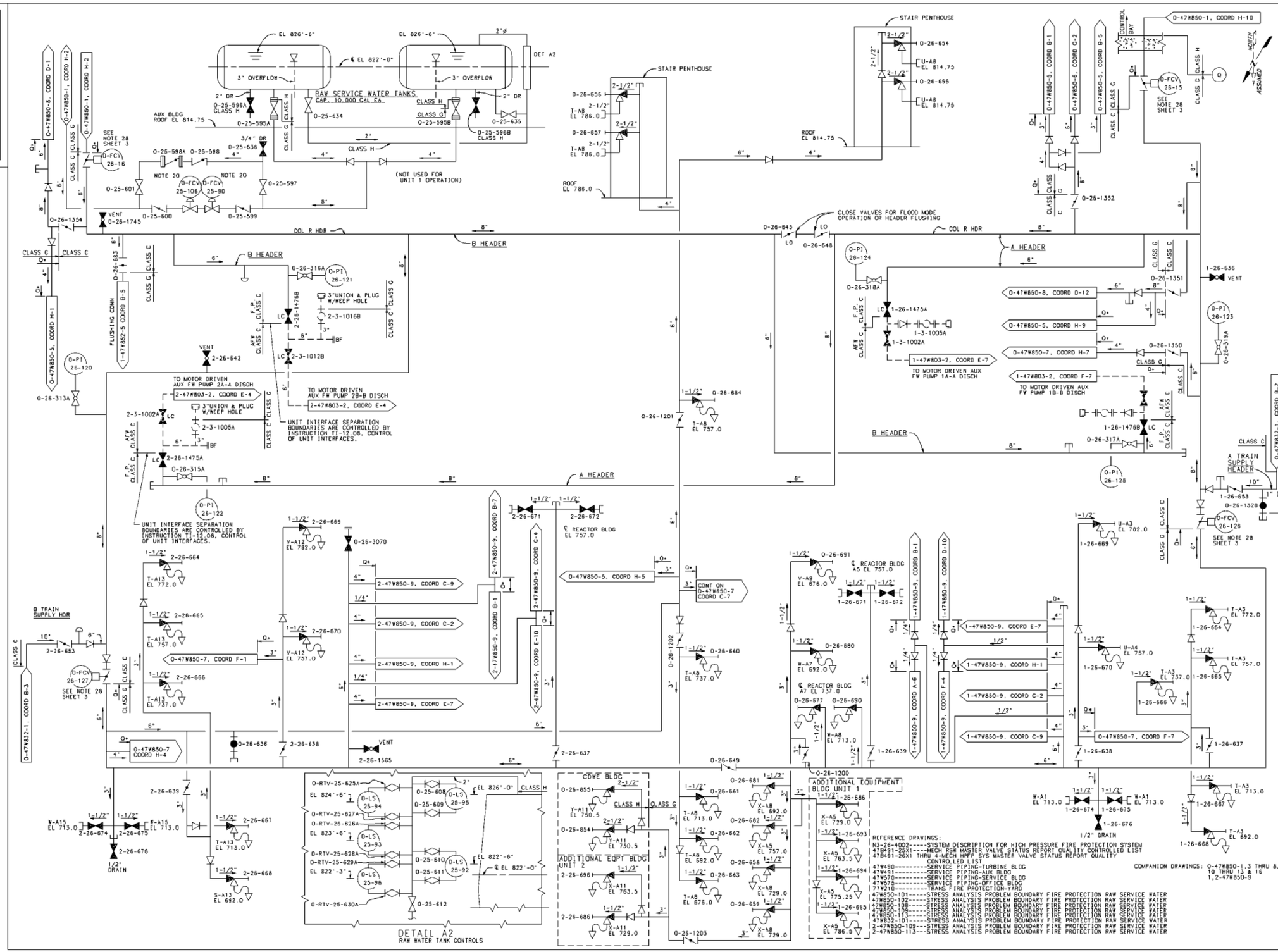

NOTES:

1. ALL VALVES ARE THE SAME SIZE AS THE PIPING UNLESS OTHERWISE NOTED.
2. ALL PRESSURE GAUGE AND PRESSURE SWITCH VALVES ARE 1/2" GLOBE VALVES UNLESS OTHERWISE NOTED.
3. FOR EACH RAW SERVICE WATER CONNECTION AND EACH FIRE HOSE CONNECTION THE FOLLOWING TYPICAL INFORMATION IS GIVEN:
   EL 713.0 - ELEVATION OF CONNECTION 13-K - NEAREST COLUMN LOCATION
4. ALL SIAMESE FIRE HOSE CONNECTIONS ARE 2-1/2" UNLESS OTHERWISE NOTED.
5. ALL RAW SERVICE WATER CONNECTIONS ARE 1" UNLESS OTHERWISE NOTED.
6. NOT USED.
7. NOT USED.
8. ALL FIRE PROTECTION VALVES ON A UNIT BASIS SHALL BE PREFIXED WITH THE UNIT NUMBER, 1-26-501, 1-26-502, ETC.
9. ALL RAW SERVICE WATER VALVES ON A UNIT BASIS SHALL BE PREFIXED WITH THE UNIT NUMBER, 1-25-501, 1-25-502, ETC.
10. REFER TO 47W853 SERIES FOR EQUIPMENT DRAIN CONNECTIONS UNLESS OTHERWISE NOTED.
11. VALVES WHICH ARE COMMON TO BOTH UNITS SHALL BE PREFIXED WITH "0" 0-25-501, 0-25-502, ETC.
12. CLASS X/CLASS X INDICATES TVA PIPE CLASSIFICATION AS SHOWN ON 47B21-1. CLASS L IS UNCLASSIFIED AS TO CODE JURISDICTION BUT SYSTEM PIPING SHALL BE CONSTRUCTED IN ACCORDANCE WITH ANSI B31.1.0 (1973).
13. HYDROSTATIC TESTING REQUIREMENTS AND APPLICABLE CODES, FOR HIGH PRESSURE FIRE PROTECTION AND RAW SERVICE WATER PIPING SHALL BE AS INDICATED BELOW:
   (A) SYSTEM TEMPERATURE IS 130 F. SYSTEM DESIGN PRESSURE AND APPLICABLE CODES ARE AS FOLLOWS:

SYSTEM	DESIGN PRESS.	CODE
HPFP (CLASS B & C)	200 PSIG	NFPA/ASME SECT.III
HPFP (CLASS C & H) *,**	150 PSIG	NFPA/ANSI B31.1
RSW (CLASS C & H) *	150 PSIG	ANSI B31.1
HPFP (CLASS L)	150 PSIG	NFPA
RSW (CLASS L)	150 PSIG	UNCLASSIFIED

   * THE DESIGN PRESSURE FOR PIPING LOCATED BELOW ELEVATION 720.0 FEET IS 165 PSIG.
   ** THE FIRE PUMP TEST LOOP PIPING IS DEFINED AS THE PIPING DOWNSTREAM OF VALVES 0-26-590 AND 0-26-591 UP TO AND INCLUDING VALVE 0-26-872 FOR PUMPS 1A-A AND 2A-A; PIPING DOWNSTREAM OF VALVES 0-26-586 AND 0-26-587 UP TO AND INCLUDING 0-26-871 FOR PUMPS 1B-B AND 2B-B. THIS PIPING SHALL HAVE A DESIGN PRESSURE OF 200 PSIG.
   THE HPFP/RSW SYSTEM MAY EXPERIENCE PRESSURE SURGES OF UP TO 200 PSIG DURING FIRE PUMP START. THESE PRESSURE SURGES MAY BE TRAPPED IN THE TRIM PIPING OF PREACTION SUPPRESSION SYSTEMS. THIS CONDITION IS ACCEPTABLE PER WBPER910369, R2.
   (B) SYSTEM HYDROSTATIC TEST PRESSURE SHALL BE DETERMINED AS FOLLOWS:
   FOR ASME - 1.25 X DESIGN PRESSURE
   FOR ANSI B31.1 - 1.5 X DESIGN PRESSURE
   FOR NFPA, THE GREATER OF 200 PSIG OR SYSTEM DESIGN PRESSURE PLUS 50 PSIG
   CODE TOLERANCE AND LIMITATIONS APPLY AS REQUIRED BY EACH CODE.
   (C) HYDROSTATIC TESTS SHALL BE CONDUCTED IN ACCORDANCE WITH CODES AS LISTED.
   FIRE PROTECTION PIPING WHICH IS ALSO TVA CLASS B, C, G OR H MAY BE TESTED AS FOLLOWS:
   ATTAIN THE ASME SECTION III/ANSI B31.1 PRESSURE AND HOLD FOR A MINIMUM OF TEN MINUTES. EXAMINATION FOR LEAKAGE MAY BEGIN WHEN THE HOLD TIME IS COMPLETED. FOR ANSI B31.1 SYSTEMS, HYDRO-PRESSURE SHALL BE MAINTAINED UNTIL THE EXAMINATION FOR LEAKAGE IS COMPLETE. AT THAT POINT, SYSTEM PRESSURE MAY BE REDUCED TO THE NFPA SYSTEM HYDROSTATIC TEST PRESSURE AND HELD FOR THE REMAINDER OF THE TWO HOUR NFPA TEST DURATION. FOR ASME SYSTEMS, THE HYDRO-PRESSURE SHALL BE MAINTAINED FOR THE TWO HOUR NFPA DURATION OR UNTIL THE EXAMINATION FOR LEAKAGE IS COMPLETED, WHICHEVER IS GREATER. FOR SPRINKLER PIPING DOWN STREAM OF THE DELUGE VALVES WHICH DOES NOT SERVE A SUPPLY FUNCTION FOR ASME OR B31.1 COMPONENTS, HYDROSTATIC TESTING ONLY TO NFPA REQUIREMENTS MAY BE SUBSTITUTED FOR TESTING TO ASME OR B31.1 PLUS NFPA REQUIREMENTS.
   (D) ALL FIRE PROTECTION PIPING SHALL BE HYDROSTATICALLY TESTED IN ACCORDANCE WITH NFPA 13, 14, 15, 16 OR 24, AS APPLICABLE.
   (E) ALL EMBEDDED OR BURIED PIPING SHALL BE HYDROSTATICALLY TESTED PRIOR TO EMBEDMENT OR BURIAL.
   (F) TVA CLASS L RSW PIPING SHALL BE TESTED IN ACCORDANCE WITH ANSI B31.1.
   (G) TVA PIPING INSTALLED PRIOR TO MARCH 31, 1987 (CLASS G, H & L) WHICH DO NOT FALL UNDER THE HPFP SYSTEM LIMITED QUALITY ASSURANCE (Q+) PROGRAM DO NOT REQUIRE RE-TESTING.
   (H) HPFP PIPING INSTALLED PRIOR TO AUGUST 26, 1992 WITH DOCUMENTED TEST WHICH VERIFY THAT NFPA HYDROSTATIC TEST PRESSURE (NOTE13(A)) WAS HELD FOR 2 HOURS DO NOT REQUIRE RETEST TO MEET ANSI B31.1 REQUIREMENTS. HOWEVER, ASME PIPING MUST HAVE A VALID TEST TO DEMONSTRATE COMPLIANCE WITH CURRENT REQUIREMENTS.
14. THE DESIGN PRESSURE AND TEMPERATURE OF ALL DRAINS AND VENT LINES THROUGH THE LAST ISOLATION VALVE SHALL BE THE SAME AS THE PROCESS LINE.
15. CONST SHALL DETERMINE IF THE COMPONENTS IN THE SYSTEM ARE LIMITING COMPONENTS TO THE HYDROSTATIC TEST. ASME CODE CASES INVOLVING HYDROSTATIC TESTING MAY BE USED IF EN DES APPROVES THEIR APPLICATION.
16. PIPING AND COMPONENTS DENOTED WITH ——Q+ ARE UNDER THE LIMITED FIRE PROTECTION QA PROGRAM.
17. ALL CONSTRUCTION ACTIVITIES FOR FEATURES COVERED BY THE LIMITED FIRE PROTECTION QUALITY ASSURANCE PROGRAM SHALL BE CONDUCTED IN ACCORDANCE WITH TVA GENERAL CONSTRUCTION SPECIFICATION NO.C-73.
18. FOR LIMITED FIRE PROTECTION QUALITY ASSURANCE PROGRAM REQUIREMENTS SEE PROCEDURE SPP-10.12.
19. DESIGN CRITERIA/SYSTEM DESCRIPTION REFERENCE DOCUMENTS.
   (USE THE LATEST REVISION ON ALL WORK UNLESS OTHERWISE SPECIFIED.
   SEE THE LATEST REVISION OF THE 47B21 SERIES DRAWINGS
   "PIPING SYSTEM CLASSIFICATION...").
   WB-DC-80-62 - - - -FIRE PROTECTION
20. THE VALVES 0-FCV-25-90 & 106 HAVE BEEN DISABLED IN THE "OPEN" POSITION BY DCN W-20905-A. NOT USED FOR UNIT 1 AND UNIT 2 OPERATION.

NOTES CONTINUED ON 0-47W850-3.

REFERENCE DRAWINGS:
N3-26-4002-----SYSTEM DESCRIPTION FOR HIGH PRESSURE FIRE PROTECTION SYSTEM
47B491-25X1----MECH RSW MASTER VALVE STATUS REPORT QUALITY CONTROLLED LIST
47B491-26X1 THRU 4-MECH HPFP SYS MASTER VALVE STATUS REPORT QUALITY CONTROLLED LIST
47W490---------SERVICE PIPING-TURBINE BLDG
47W491---------SERVICE PIPING-AUX BLDG
47W570---------SERVICE PIPING-SERVICE BLDG
47W575---------SERVICE PIPING-OFFICE BLDG
77W210---------TRANS FIRE PROTECTION-YARD
47W850-101-----STRESS ANALYSIS PROBLEM BOUNDARY FIRE PROTECTION RAW SERVICE WATER
47W850-102-----STRESS ANALYSIS PROBLEM BOUNDARY FIRE PROTECTION RAW SERVICE WATER
47W850-108-----STRESS ANALYSIS PROBLEM BOUNDARY FIRE PROTECTION RAW SERVICE WATER
47W850-109-----STRESS ANALYSIS PROBLEM BOUNDARY FIRE PROTECTION RAW SERVICE WATER
47W850-113-----STRESS ANALYSIS PROBLEM BOUNDARY FIRE PROTECTION RAW SERVICE WATER
47W832-101-----STRESS ANALYSIS PROBLEM BOUNDARY FIRE PROTECTION RAW SERVICE WATER
2-47W850-109---STRESS ANALYSIS PROBLEM BOUNDARY FIRE PROTECTION RAW SERVICE WATER
2-47W850-113---STRESS ANALYSIS PROBLEM BOUNDARY FIRE PROTECTION RAW SERVICE WATER

COMPANION DRAWINGS: 0-47W850-1,3 THRU 8, 10 THRU 13 & 16 1,2-47W850-9

UFSAR AMENDMENT 4

WATTS BAR
FIRE PROTECTION
REPORT

AUXILIARY BUILDING
UNITS 1 & 2
FLOW DIAGRAM
FIRE PROTECTION &
RAW SERVICE WATER
FIRE PROTECTION REPORT
TVA DWG NO. 0-47W850-2 R7
FIGURE II-2A

CAD MAINTAINED DRAWING

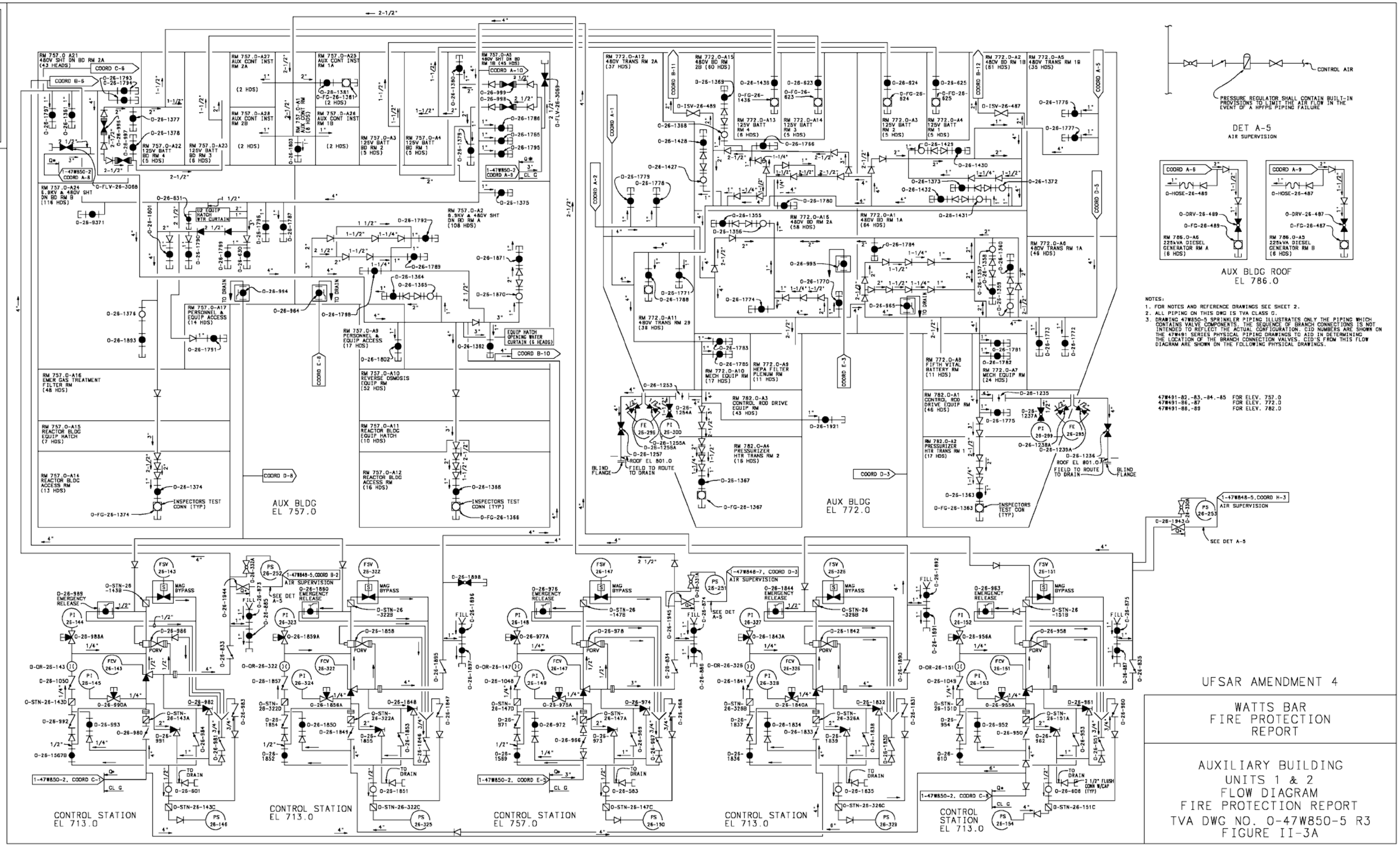

UFSAR AMENDMENT 4

WATTS BAR
FIRE PROTECTION
REPORT

AUXILIARY BUILDING
UNITS 1 & 2
FLOW DIAGRAM
FIRE PROTECTION REPORT
TVA DWG NO. 0-47W850-5 R3
FIGURE II-3A

CAD MAINTAINED DRAWING

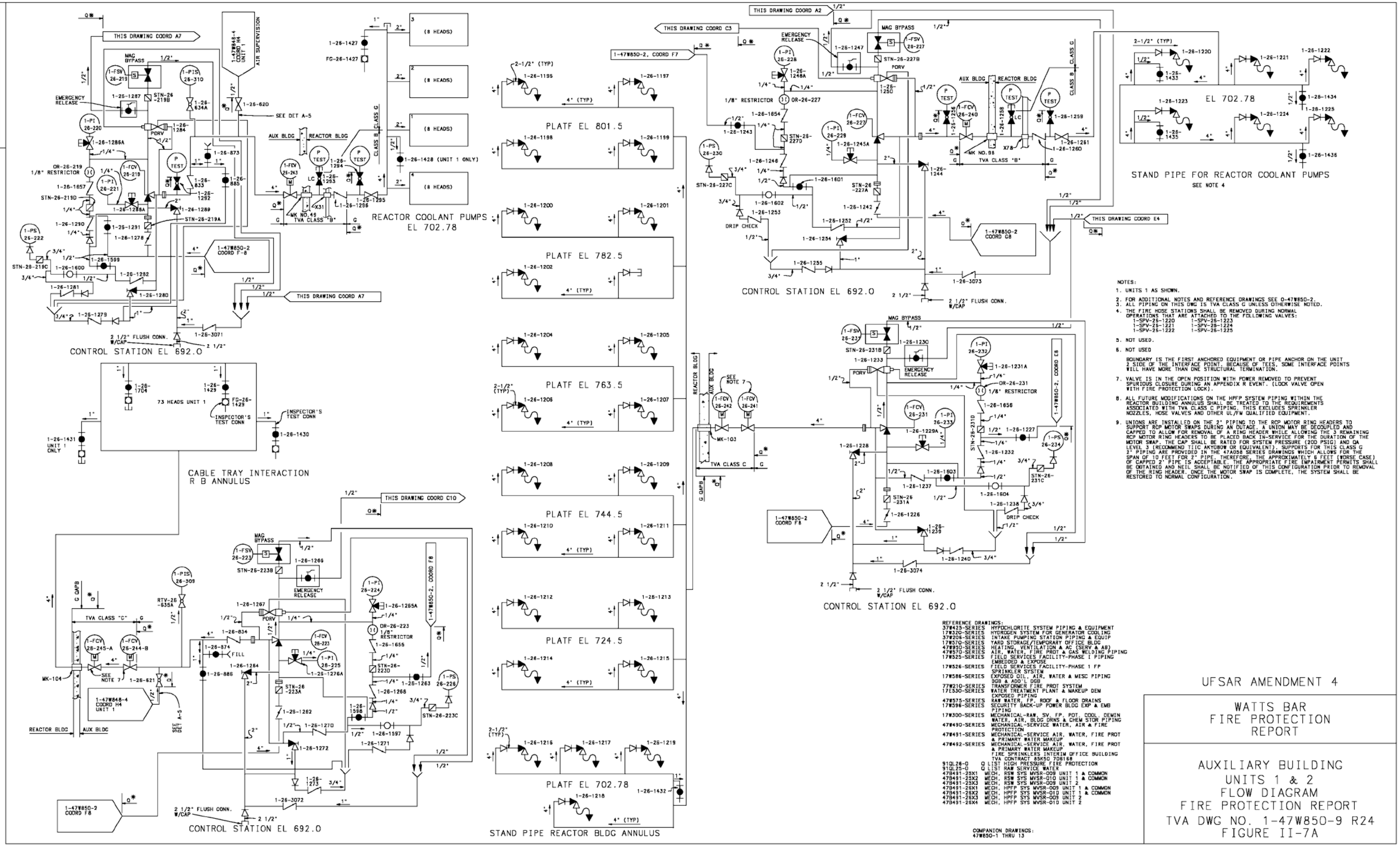

NOTES:

1. UNITS 1 AS SHOWN.
2. FOR ADDITIONAL NOTES AND REFERENCE DRAWINGS SEE 0-47W850-2.
3. ALL PIPING ON THIS DWG IS TVA CLASS G UNLESS OTHERWISE NOTED.
4. THE FIRE HOSE STATIONS SHALL BE REMOVED DURING NORMAL OPERATIONS THAT ARE ATTACHED TO THE FOLLOWING VALVES:
   1-SPV-26-1220 1-SPV-26-1223
   1-SPV-26-1221 1-SPV-26-1224
   1-SPV-26-1222 1-SPV-26-1225
5. NOT USED.
6. NOT USED

   BOUNDARY IS THE FIRST ANCHORED EQUIPMENT OR PIPE ANCHOR ON THE UNIT 2 SIDE OF THE INTERFACE POINT. BECAUSE OF TEES, SOME INTERFACE POINTS WILL HAVE MORE THAN ONE STRUCTURAL TERMINATION.
7. VALVE IS IN THE OPEN POSITION WITH POWER REMOVED TO PREVENT SPURIOUS CLOSURE DURING AN APPENDIX R EVENT. (LOCK VALVE OPEN WITH FIRE PROTECTION LOCK).
8. ALL FUTURE MODIFICATIONS ON THE HFFP SYSTEM PIPING WITHIN THE REACTOR BUILDING ANNULUS SHALL BE TREATED TO THE REQUIREMENTS ASSOCIATED WITH TVA CLASS C PIPING. THIS EXCLUDES SPRINKLER NOZZLES, HOSE VALVES AND OTHER UL/FM QUALIFIED EQUIPMENT.
9. UNIONS ARE INSTALLED ON THE 2" PIPING TO THE RCP MOTOR RING HEADERS TO SUPPORT RCP MOTOR SWAPS DURING AN OUTAGE. A UNION MAY BE DECOUPLED AND CAPPED TO ALLOW FOR REMOVAL OF A RING HEADER WHILE ALLOWING THE 3 REMAINING RCP MOTOR RING HEADERS TO BE PLACED BACK IN-SERVICE FOR THE DURATION OF THE MOTOR SWAP. THE CAP SHALL BE RATED FOR SYSTEM PRESSURE (200 PSIG) AND QA LEVEL 3 (RECOMMEND TIIC AKYOBOW OR EQUIVALENT). SUPPORTS FOR THIS CLASS G 2" PIPING ARE PROVIDED IN THE 47A058 SERIES DRAWINGS WHICH ALLOWS FOR THE SPAN OF 10 FEET FOR 2" PIPE. THEREFORE, THE APPROXIMATELY 6 FEET (WORSE CASE) OF CAPPED 2" PIPE IS ACCEPTABLE. THE APPROPRIATE FIRE IMPAIRMENT PERMITS SHALL BE OBTAINED AND NEIL SHALL BE NOTIFIED OF THIS CONFIGURATION PRIOR TO REMOVAL OF THE RING HEADER. ONCE THE MOTOR SWAP IS COMPLETE, THE SYSTEM SHALL BE RESTORED TO NORMAL CONFIGURATION.

REFERENCE DRAWINGS:

37W425-SERIES	HYPOCHLORITE SYSTEM PIPING & EQUIPMENT
17W320-SERIES	HYDROGEN SYSTEM FOR GENERATOR COOLING
37W206-SERIES	INTAKE PUMPING STATION PIPING & EQUIP
17W570-SERIES	YARD STORAGE/TEMPORARY OFFICE BLDG
47W930-SERIES	HEATING, VENTILATION & AC (SERV & AB)
47W570-SERIES	AIR, WATER, FIRE PROT & GAS WELDING PIPING
17W525-SERIES	FIELD SERVICES FACILITY-PHASE I PIPING EMBEDDED & EXPOSE
17W526-SERIES	FIELD SERVICES FACILITY-PHASE 1 FP SPRINKLER SYSTEM
17W586-SERIES	EXPOSED OIL, AIR, WATER & MISC PIPING DGB & ADD'L DGB
77W210-SERIES	TRANSFORMER FIRE PROT SYSTEM
17E530-SERIES	WATER TREATMENT PLANT & MAKEUP DEM EXPOSED PIPING
47W575-SERIES	RAW WATER, FP, ROOF & FLOOR DRAINS
17W596-SERIES	SECURITY BACK-UP POWER BLDG EXP & EMB PIPING
17W300-SERIES	MECHANICAL-RAW, SV, FP, POT, COOL, DEMIN WATER, AIR, BLDG DRNS & CHEM STOR PIPING
47W430-SERIES	MECHANICAL-SERVICE WATER, AIR & FIRE PROTECTION
47W431-SERIES	MECHANICAL-SERVICE AIR, WATER, FIRE PROT & PRIMARY WATER MAKEUP
47W492-SERIES	MECHANICAL-SERVICE AIR, WATER, FIRE PROT & PRIMARY WATER MAKEUP FIRE SPRINKLERS INTERIM OFFICE BUILDING TVA CONTRACT 85K50 708168
91QL26-0	Q LIST HIGH PRESSURE FIRE PROTECTION
91QL25-0	Q LIST RAW SERVICE WATER
47W431-25X1	MECH, RSW SYS MVSR-009 UNIT 1 & COMMON
47W431-25X2	MECH, RSW SYS MVSR-010 UNIT 1 & COMMON
47W431-25X3	MECH, RSW SYS MVSR-009 UNIT 2
47W431-26X1	MECH, HPFP SYS MVSR-009 UNIT 1 & COMMON
47W431-26X2	MECH, HPFP SYS MVSR-010 UNIT 1 & COMMON
47W431-26X3	MECH, HPFP SYS MVSR-009 UNIT 2
47W431-26X4	MECH, HPFP SYS MVSR-010 UNIT 2

COMPANION DRAWINGS:
47W850-1 THRU 13

UFSAR AMENDMENT 4

WATTS BAR
FIRE PROTECTION
REPORT

AUXILIARY BUILDING
UNITS 1 & 2
FLOW DIAGRAM
FIRE PROTECTION REPORT
TVA DWG NO. 1-47W850-9 R24
FIGURE II-7A

CAD MAINTAINED DRAWING

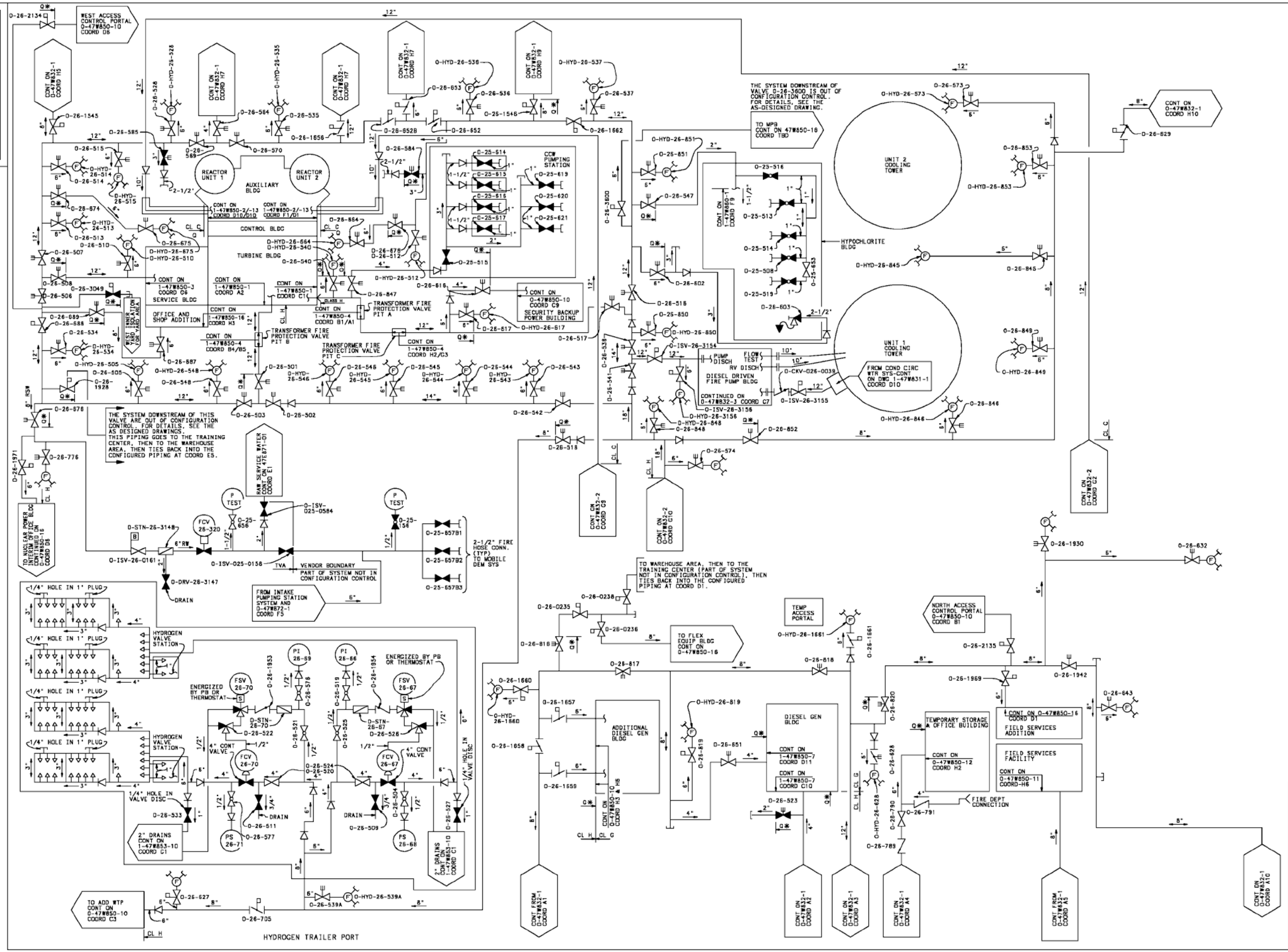

NOTES:

1. ALL VALVES ARE SAME SIZE AS PIPE UNLESS OTHERWISE NOTED.
2. OPERATIONAL VALVES ARE SHOWN IN THEIR NORMAL OPERATING POSITION.
3. ALL VALVES AND INSTRUMENTS TO HAVE SYSTEM NUMBER IN ADDITION TO UNIT AND VALVE NUMBER SHOWN. EXAMPLE: 1-25-501.
4. VALVE MARKER TAG NUMBERS SHOWN WITHOUT UNIT PREFIX ARE COMMON TO ALL UNITS AND SHALL HAVE A PREFIX NUMBER 0 AS 0-25-501.
5. ALL VALVES SHALL HAVE MARKER TAGS.
6. REFER TO 1-47B850-2 FOR HYDRO TEST REQUIREMENTS FOR HIGH PRESSURE FIRE PROTECTION AND RAW SERVICE WATER PIPING.

7. THE DESIGN PRESSURE AND TEMPERATURE OF ALL DRAINS AND VENT LINES THROUGH THE LAST ISOLATION VALVE SHALL BE THE SAME AS THE PROCESS LINE.
8. THE HIGH PRESSURE FIRE PUMPS, STRAINERS, VALVES AND PIPING AND ALL SERVICE WATER PIPING AND VALVES IN THE INTAKE PUMPING STATION EQUIPMENT ROOMS ARE TVA CLASS C EXCEPT AS NOTED. ALL HIGH-PRESSURE FIRE PROTECTION PIPING WHICH SUPPLIES WATER IN THE YARD TO THE AUXILIARY BLDG IS TVA CLASS C. THE REMAINDER OF THE FIRE PROTECTION PIPING IN THE YARD AND ALL SERVICE WATER PIPING AND VALVES IN THE YARD ARE TVA CLASS H. ALL REDUNDANT HEADERS ARE PHYSICALLY SEPARATED IN THE YARD AND THE INTAKE PUMPING STATION.
9. PIPING AND COMPONENTS DENOTED WITH —Q*— ARE UNDER THE LIMITED QA PROGRAM.
10. ALL CONSTRUCTION ACTIVITIES FOR THE FEATURES COVERED BY THE LIMITED FIRE PROTECTION QUALITY ASSURANCE PROGRAM SHALL BE CONDUCTED IN ACCORDANCE WITH TVA GENERAL CONSTRUCTION SPECIFICATION NO. G-73.

11. THE CORROSION RING DOWN-STREAM OF PCV 26-3 & PCV 26-8 IS TVA CLASSIFICATION "G".
12. THE SYMBOL LO INDICATES VALVE IS SEALED OR LOCKED IN THE OPEN POSITION. THE SYMBOL LC INDICATES VALVE IS SEALED OR LOCKED IN THE CLOSED POSITION. OTHER NOTES MAY DESCRIBE HOW VALVE IS RETAINED IN THE REQUIRED POSITION.
13. DESIGN CRITERIA/SYSTEM DESCRIPTION REFERENCE DOCUMENTS (USE THE LATEST REVISION ON ALL WORK UNLESS OTHERWISE SPECIFIED. SEE THE LATEST REVISION OF THE 47B21 SERIES DRAWINGS "PIPING SYSTEM CLASSIFICATION.");

N3-26-4002- - - - -HIGH PRESSURE FIRE PROTECTION
WB-DC-40-62 - - - -FIRE PROTECTION

14. ALL ROOT VALVES HAVE AN "A" SUFFIX (NOT SHOWN) IN THE ADDRESS FIELD TO COMPLETE THE COMPONENT IDENTIFICATION CODE.

15. SOME CID'S ON THIS DRAWING HAVE BEEN CHANGED AND MAY DIFFER FROM THE CID'S SHOWN ON OTHER DOCUMENTS FOR THE SAME COMPONENT. THE ALTERNATE ID CAN BE ACCESSED IN MAXIND AS NECESSARY TO DETERMINE IF PREVIOUS CID'S EXISTED FOR A SPECIFIC COMPONENT.

REFERENCE DRAWINGS:
47W800-1 SERIES----FLOW DIAGRAM PRINCIPAL PIPING SYSTEMS INDEX
30B61 SERIES------INSTRUMENTATION SYMBOLS AND IDENTIFICATION
47W610 SERIES------CONTROL DIAGRAMS
47B601 SERIES------TABULATION OF INSTRUMENTS
47W611 SERIES------LOGIC DIAGRAMS
47W850 SERIES------FLOW DIAGRAMS-FIRE PROTECTION AND RAW SERVICE WATER

SYMBOLS:
DENOTES CURB BOX VALVE
DENOTES POST INDICATOR VALVE

UFSAR AMENDMENT 4

WATTS BAR
FIRE PROTECTION
REPORT

YARD
UNITS 1 & 2
FLOW DIAGRAM
RAW SERVICE WATER
& FIRE PROTECTION SYSTEM
FIRE PROTECTION REPORT
TVA DWG NO. O-47W832-1 R5
FIGURE II-9A

CAD MAINTAINED DRAWING

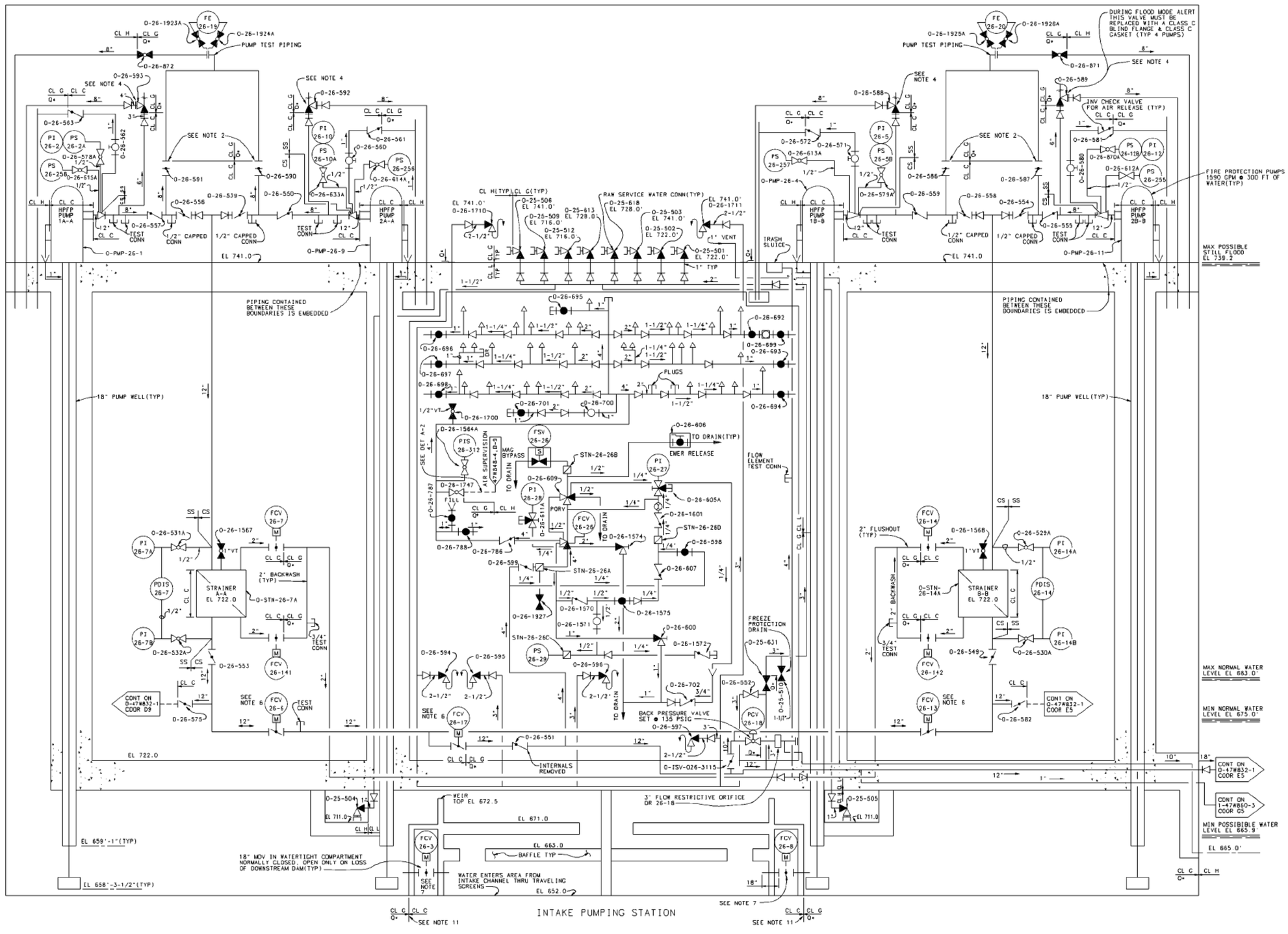

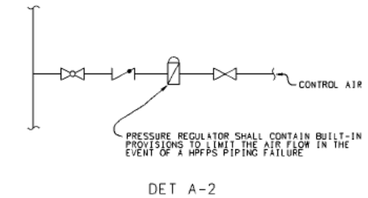

DET A-2
AIR SUPERVISION

NOTES:

1. FOR PREVIOUS REVISIONS & GENERAL NOTES SEE 47W832-1.
2. THE FIRE PUMP TEST LOOP ISOLATION VALVES 0-26-586, 0-26-587, 0-26-590 & 0-26-591 MUST BE LOCKED CLOSED EXCEPT DURING PUMP TESTING.
3. TEMPORARY INSTRUMENTATION HAS BEEN ADDED TO PUMP 1A-A, FOR SPECIFIC INFORMATION REFER TO DRAWINGS D2081, CONTRACT NO. 83224 AND 38N219 (TVA)
4. RELIEF VALVE SET AT 145 PSIG.
5. ALL PIPING ON THIS DRAWING IS TVA CLASS C, G, H, AND L AS NOTED.
6. VALVE IS IN THE OPEN POSITION WITH POWER REMOVED TO PREVENT SPURIOUS CLOSURE DURING AN APPENDIX R EVENT. REFER TO ELECTRICAL SINGLE LINE DRAWINGS 1-45W751-2, 1-45W751-10 AND 2-45W751-11 FOR METHOD OF POWER REMOVAL.
7. VALVE HAS POWER REMOVED IN THE CLOSED POSITION (LOCK VALVE CLOSED WITH FIRE PROTECTION LOCK). REFER TO ELECTRICAL SINGLE LINE DRAWINGS 1-45W751-1 AND 2-45W751-7 FOR METHOD OF POWER REMOVAL.

REFERENCE DRAWING:

47W832-102 -----STRESS ANALYSIS PROBLEM BOUNDARY RAW SERV WATER & FIRE PROTECTION SYSTEM

UFSAR AMENDMENT 4

WATTS BAR
FIRE PROTECTION
REPORT

INTAKE PUMPING STATION
RAW SERVICE WATER &
FIRE PROTECTION SYSTEM
FLOW DIAGRAM
FIRE PROTECTION REPORT
TVA DWG NO. 0-47W832-2 R3
FIGURE II-10A

CAD MAINTAINED DRAWING

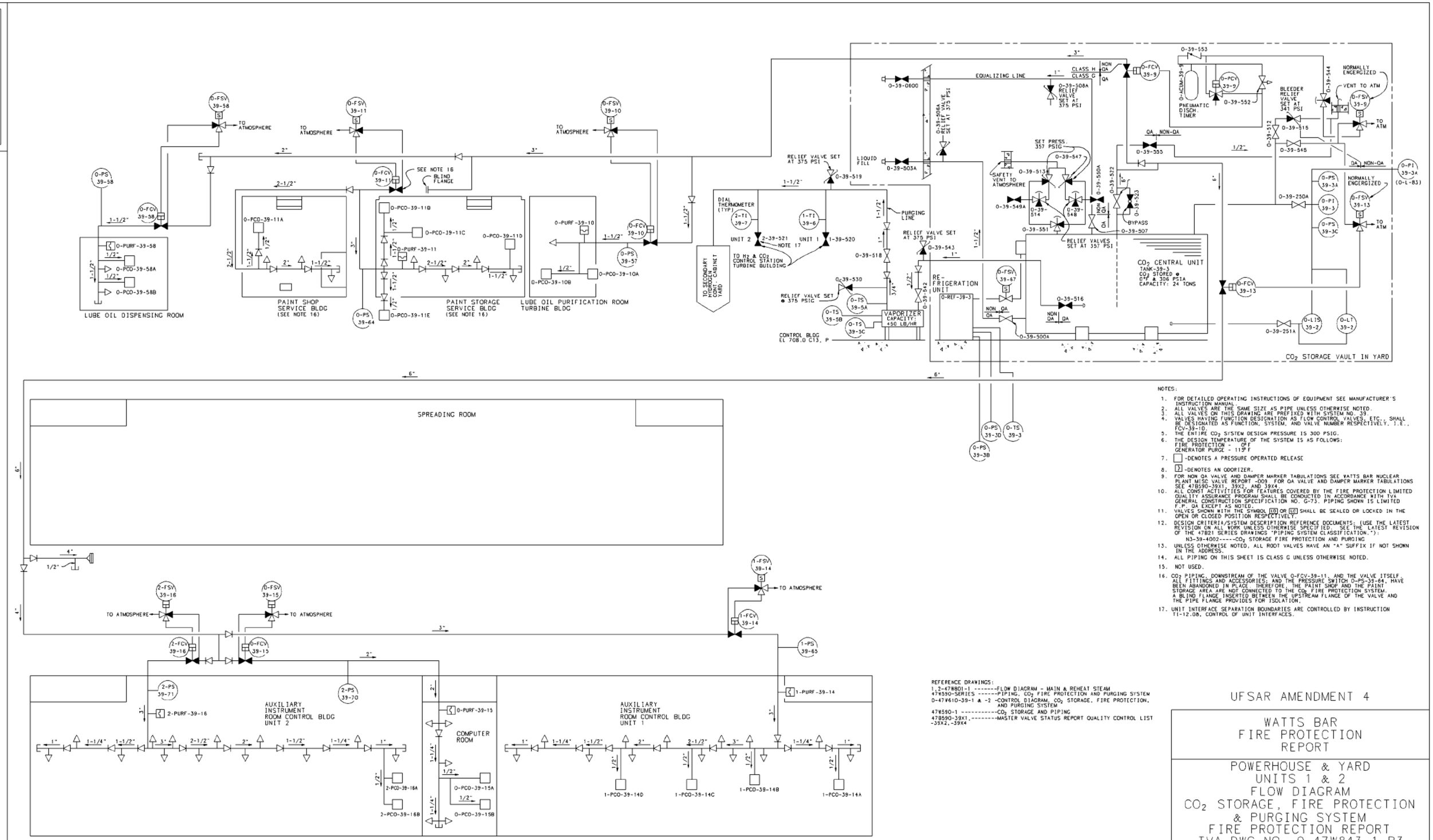

NOTES:

1. FOR DETAILED OPERATING INSTRUCTIONS OF EQUIPMENT SEE MANUFACTURER'S INSTRUCTION MANUAL.
2. ALL VALVES ARE THE SAME SIZE AS PIPE UNLESS OTHERWISE NOTED.
3. ALL VALVES ON THIS DRAWING ARE PREFIXED WITH SYSTEM NO. 39.
4. VALVES HAVING FUNCTION DESIGNATION AS FLOW CONTROL VALVES, ETC., SHALL BE DESIGNATED AS FUNCTION, SYSTEM, AND VALVE NUMBER RESPECTIVELY, I.E., FCV-39-10.
5. THE ENTIRE CO_2 SYSTEM DESIGN PRESSURE IS 300 PSIG.
6. THE DESIGN TEMPERATURE OF THE SYSTEM IS AS FOLLOWS:
   FIRE PROTECTION - 0°F
   GENERATOR PURGE - 113°F
7. ☐ -DENOTES A PRESSURE OPERATED RELEASE
8. ▽ -DENOTES AN ODORIZER.
9. FOR NON QA VALVE AND DAMPER MARKER TABULATIONS SEE WATTS BAR NUCLEAR PLANT MISC VALVE REPORT -009 FOR QA VALVE AND DAMPER MARKER TABULATIONS SEE 47B590-39X1, 39X2, AND 39X4.
10. ALL CONST ACTIVITIES FOR FEATURES COVERED BY THE FIRE PROTECTION LIMITED QUALITY ASSURANCE PROGRAM SHALL BE CONDUCTED IN ACCORDANCE WITH TVA GENERAL CONSTRUCTION SPECIFICATION NO. G-73. PIPING SHOWN IS LIMITED F.P. QA EXCEPT AS NOTED.
11. VALVES SHOWN WITH THE SYMBOL LO OR LC SHALL BE SEALED OR LOCKED IN THE OPEN OR CLOSED POSITION RESPECTIVELY.
12. DESIGN CRITERIA/SYSTEM DESCRIPTION REFERENCE DOCUMENTS: (USE THE LATEST REVISION ON ALL WORK UNLESS OTHERWISE SPECIFIED. SEE THE LATEST REVISION OF THE 47B21 SERIES DRAWINGS 'PIPING SYSTEM CLASSIFICATION.'):
    N3-39-4002-----CO_2 STORAGE FIRE PROTECTION AND PURGING
13. UNLESS OTHERWISE NOTED, ALL ROOT VALVES HAVE AN "A" SUFFIX IF NOT SHOWN IN THE ADDRESS.
14. ALL PIPING ON THIS SHEET IS CLASS G UNLESS OTHERWISE NOTED.
15. NOT USED.
16. CO_2 PIPING, DOWNSTREAM OF THE VALVE 0-FCV-39-11, AND THE VALVE ITSELF, ALL FITTINGS AND ACCESSORIES; AND THE PRESSURE SWITCH 0-PS-39-64, HAVE BEEN ABANDONED IN PLACE. THEREFORE, THE PAINT SHOP AND THE PAINT STORAGE AREA ARE NOT CONNECTED TO THE CO_2 FIRE PROTECTION SYSTEM. A BLIND FLANGE INSERTED BETWEEN THE UPSTREAM FLANGE OF THE VALVE AND THE PIPE FLANGE PROVIDES FOR ISOLATION.
17. UNIT INTERFACE SEPARATION BOUNDARIES ARE CONTROLLED BY INSTRUCTION TI-12.08, CONTROL OF UNIT INTERFACES.

REFERENCE DRAWINGS:
1, 2-47W801-1 ------FLOW DIAGRAM - MAIN & REHEAT STEAM
47W590-SERIES ------PIPING, CO_2 FIRE PROTECTION AND PURGING SYSTEM
0-47W610-39-1 & -2 -CONTROL DIAGRAM, CO_2 STORAGE, FIRE PROTECTION, AND PURGING SYSTEM
47W590-1 ----------CO_2 STORAGE AND PIPING
47B590-39X1,--------MASTER VALVE STATUS REPORT QUALITY CONTROL LIST -39X2,-39X4

COMPANION DRAWINGS: 0-47W843-2

UFSAR AMENDMENT 4

WATTS BAR
FIRE PROTECTION
REPORT

POWERHOUSE & YARD
UNITS 1 & 2
FLOW DIAGRAM
CO_2 STORAGE, FIRE PROTECTION
& PURGING SYSTEM
FIRE PROTECTION REPORT
TVA DWG NO. 0-47W843-1 R3
FIGURE II-11A

CAD MAINTAINED DRAWING

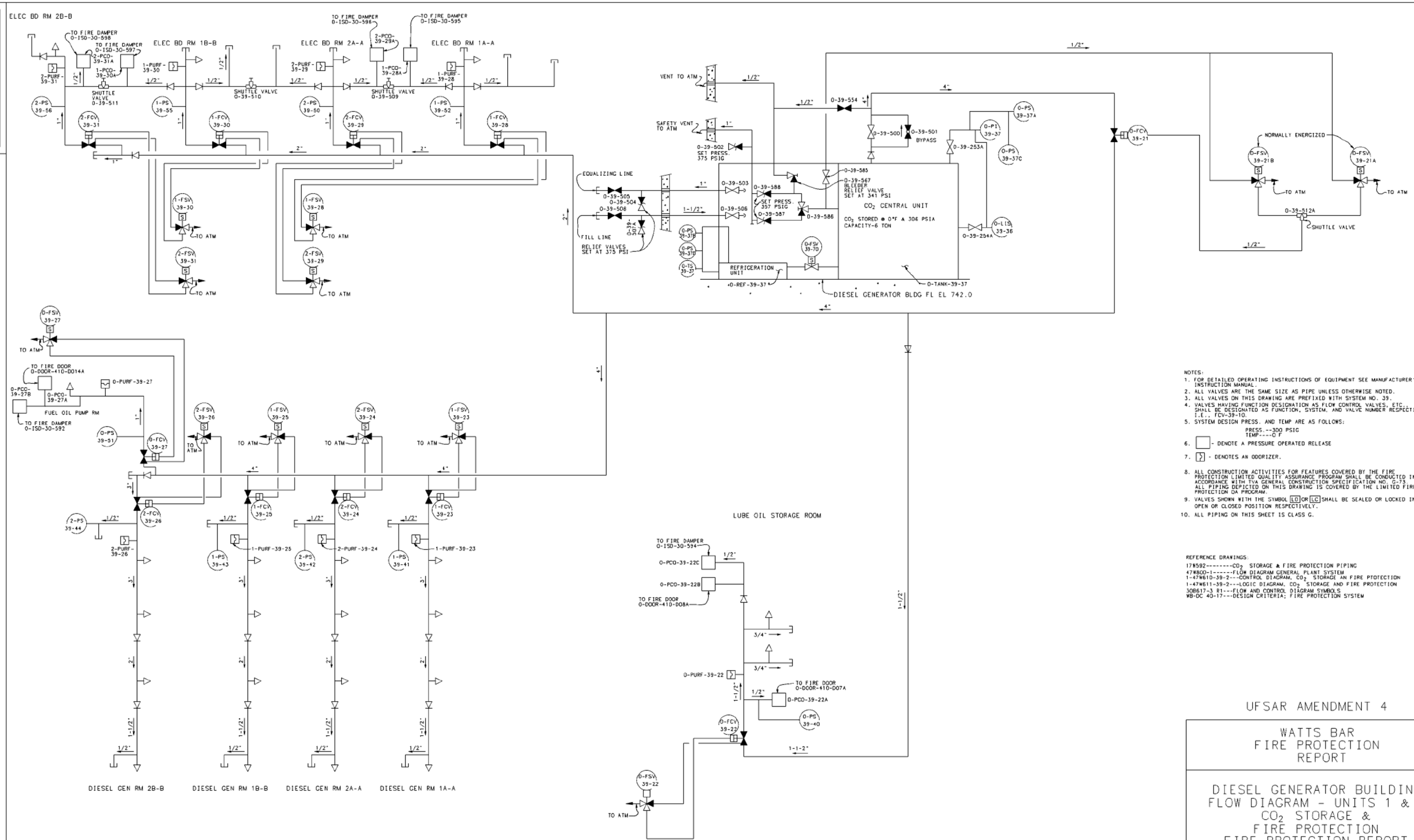

NOTES:

1. FOR DETAILED OPERATING INSTRUCTIONS OF EQUIPMENT SEE MANUFACTURER'S INSTRUCTION MANUAL.
2. ALL VALVES ARE THE SAME SIZE AS PIPE UNLESS OTHERWISE NOTED.
3. ALL VALVES ON THIS DRAWING ARE PREFIXED WITH SYSTEM NO. 39.
4. VALVES HAVING FUNCTION DESIGNATION AS FLOW CONTROL VALVES, ETC., SHALL BE DESIGNATED AS FUNCTION, SYSTEM, AND VALVE NUMBER RESPECTIVELY, I.E., FCV-39-10.
5. SYSTEM DESIGN PRESS. AND TEMP ARE AS FOLLOWS:
   PRESS.--300 PSIG
   TEMP----0 F
6. [ ] - DENOTE A PRESSURE OPERATED RELEASE
7. [>] - DENOTES AN ODORIZER.
8. ALL CONSTRUCTION ACTIVITIES FOR FEATURES COVERED BY THE FIRE PROTECTION LIMITED QUALITY ASSURANCE PROGRAM SHALL BE CONDUCTED IN ACCORDANCE WITH TVA GENERAL CONSTRUCTION SPECIFICATION NO. G-73. ALL PIPING DEPICTED ON THIS DRAWING IS COVERED BY THE LIMITED FIRE PROTECTION QA PROGRAM.
9. VALVES SHOWN WITH THE SYMBOL [LO] OR [LC] SHALL BE SEALED OR LOCKED IN THE OPEN OR CLOSED POSITION RESPECTIVELY.
10. ALL PIPING ON THIS SHEET IS CLASS G.

REFERENCE DRAWINGS:

17N592--------CO_2 STORAGE & FIRE PROTECTION PIPING
47W800-1------FLOW DIAGRAM GENERAL PLANT SYSTEM
1-47W610-39-2---CONTROL DIAGRAM, CO_2 STORAGE AN FIRE PTOTECTION
1-47W611-39-2---LOGIC DIAGRAM, CO_2 STORAGE AND FIRE PROTECTION
30B617-3 R1---FLOW AND CONTROL DIAGRAM SYMBOLS
WB-DC 40-17---DESIGN CRITERIA; FIRE PROTECTION SYSTEM

COMPANION DRAWINGS: 0-47W843-1

UFSAR AMENDMENT 4

WATTS BAR
FIRE PROTECTION
REPORT

DIESEL GENERATOR BUILDING
FLOW DIAGRAM - UNITS 1 & 2
CO_2 STORAGE &
FIRE PROTECTION
FIRE PROTECTION REPORT
TVA DWG NO. 0-47W843-2 R2
FIGURE II-12A

CAD MAINTAINED DRAWING

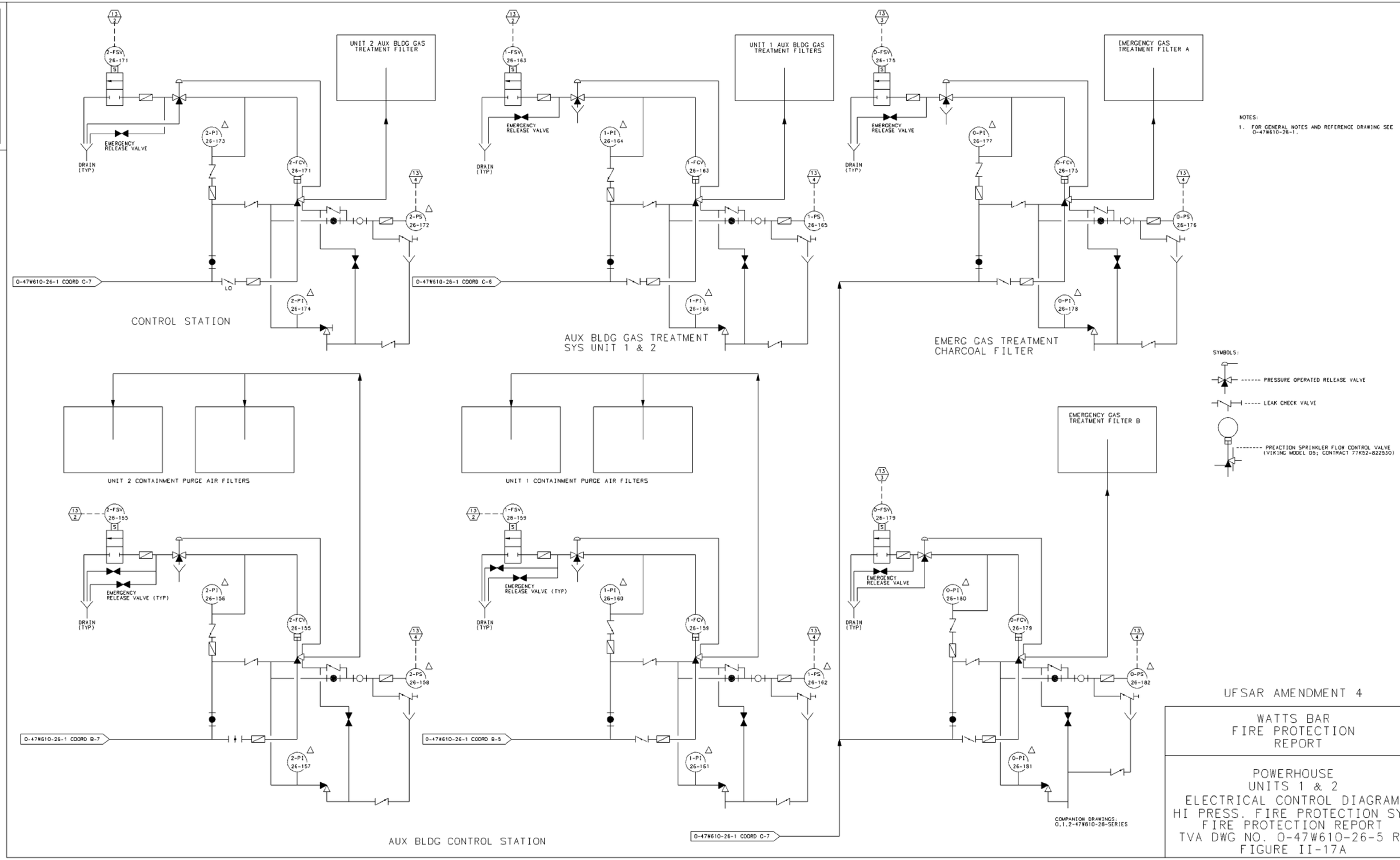

UFSAR AMENDMENT 4

WATTS BAR
FIRE PROTECTION
REPORT

POWERHOUSE
UNITS 1 & 2
ELECTRICAL CONTROL DIAGRAM
HI PRESS. FIRE PROTECTION SYS
FIRE PROTECTION REPORT
TVA DWG NO. 0-47W610-26-5 R2
FIGURE II-17A

CAD MAINTAINED DRAWING

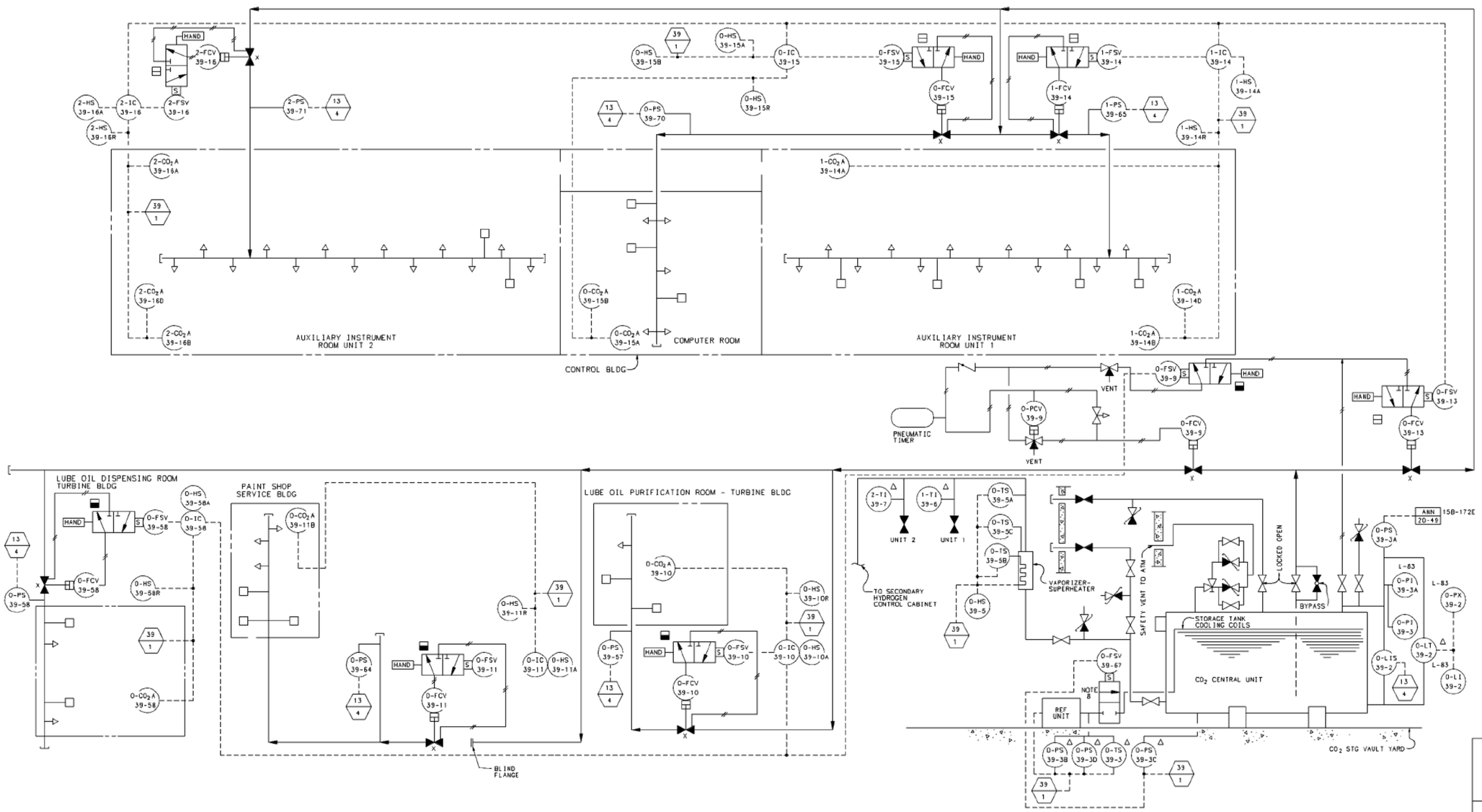

NOTES:

1. THE CO_2 STORAGE, FIRE PROTECTION, AND PURGING SYSTEM IS USED TO PROTECT CERTAIN FIRE HAZARD AREAS WHERE CO_2 IS NECESSARY FOR FIRE PROTECTION. CO_2 IS ALSO USED TO PURGE THE HYDROGEN SYSTEM.
2. THE CO_2 SYSTEM IS MANUAL/AUTO-ELECTRIC IN OPERATION BY MEANS OF PUSH-BUTTON STATIONS OR AUTOMATICALLY ACTUATED CROSS-ZONED FIRE DETECTORS. IF A FIRE IS DETECTED, AN ALARM HORN SOUNDS IN THE AREA AFFECTED BY THE FIRE. A 20-SECOND TIMER IS ACTUATED WHICH GIVES PERSONNEL TIME TO CLEAR THE AREA BEFORE CO_2 IS DISCHARGED. AFTER 20 SECONDS, THE MASTER VALVE AND LOCAL VALVE OPEN AND THEN CLOSE, DISCHARGING A PREDETERMINED AMOUNT OF CO_2. IF THE FIRE IS DETECTED VISUALLY FIRST, THE CYCLE IS STARTED BY OPERATING A HAND SWITCH.
3. PRESSURE CONTROLLED DEVICES ARE TO CLOSE FIRE DAMPERS UPON ACTIVATION OF THE FIRE-PROTECTION SYSTEM.
4. THE DIESEL GENERATOR ROOMS AND ELECTRICAL BOARD ROOMS HAVE BOTH SMOKE DETECTORS AND AUTOMATICALLY OPERATED THERMOSTATS. THE CO_2 SYSTEM CAN BE ACTUATED MANUALLY OR AUTOMATICALLY BY ACTION OF ANY TWO THERMOSTATS IN THE SAME ROOM.
5. THERE ARE CO_2 DISCHARGE ALARMS IN THE MAIN CONTROL ROOM FOR DETECTION OF ANY CO_2 RELEASE.
6. FOR INSTRUMENTS SHOWN ON THIS DWG SERIES THAT FALL UNDER THE LIMITED FIRE PROTECTION QUALITY ASSURANCE PROGRAM SEE THE MAXIMO SNPM DATA AND LONG DESCRIPTION FOR THE INSTRUMENT.
7. THE CABLES TO 0-FSV-39-11 AND 0-ARB-39-11 HAVE BEEN DISCONNECTED AND THE CO_2 SUPPLY TO 0-FCV-39-11 HAS BEEN ISOLATED BY A BLIND FLANGE. THIS WILL PREVENT ANY POSSIBILITY OF CO_2 ACTUATION INTO THE PAINT SHOP AND PAINT STORAGE ROOM.
8. REFER TO P.O. 3887277 FOR REFRIGERATION UNIT VENDOR DOCUMENTATION.

REFERENCE DRAWINGS:

0-47W611-39-1 AND 2 ---- LOGIC DIAGRAM - CO_2 STORAGE, FIRE PROTECTION, AND PURGING SYSTEM
1-47W843-1 ---------- FLOW DIAGRAM - CO_2 STORAGE, FIRE PROTECTION, AND PURGING SYSTEM
1-47W843-2 ---------- CO_2 STORAGE AND FIRE PROTECTION DIESEL GENERATOR BUILDING
1-47W611-13-1,4,AND 5 -- LOGIC DIAGRAM-FIRE DETECTION SYSTEM.

SYMBOLS:

→ CO_2 SPRAY HEAD

□ FIRE DOOR AND/OR DAMPER- CO_2 OPERATED.

COMPANION DRAWING: 0-47W610-39-2

UFSAR AMENDMENT 4

WATTS BAR
FIRE PROTECTION
REPORT

POWERHOUSE
UNITS 1 & 2
ELECTRICAL CONTROL DIAGRAM
CO_2 STG, FIRE PROT & PURG SYS
FIRE PROTECTION REPORT
TVA DWG NO. 0-47W610-39-1 R3
FIGURE II-21A

CAD MAINTAINED DRAWING

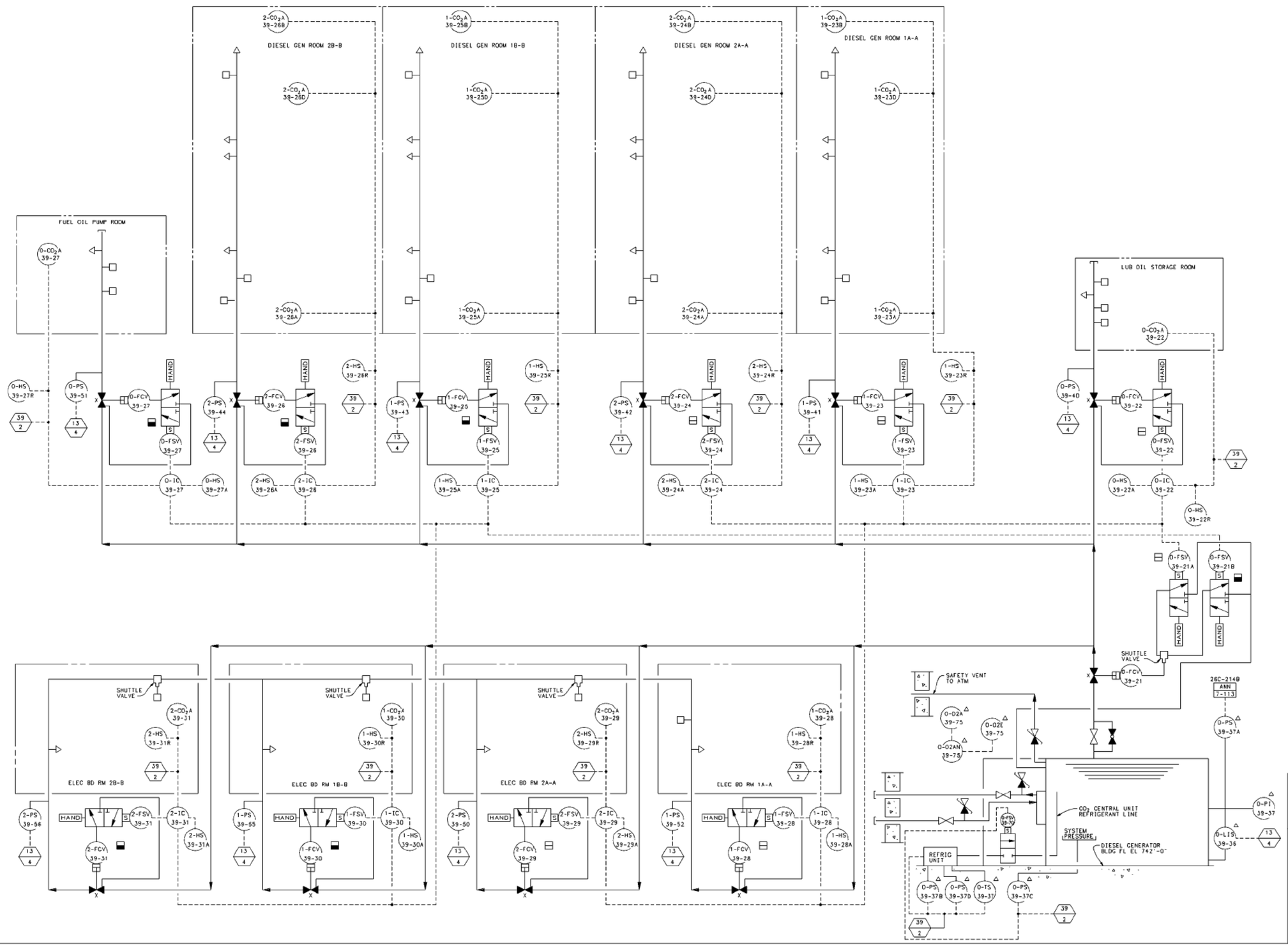

NOTES:
1. FOR GENERAL NOTES AND SYMBOLS SEE 0-47W610-39-1.

UFSAR AMENDMENT 4

WATTS BAR
FIRE PROTECTION
REPORT

DIESEL GENERATOR BUILDING
ELECTRICAL
CONTROL DIAGRAM
CO_2 STG, FIRE PROT & PURG SYS
FIRE PROTECTION REPORT
TVA DWG NO. 0-47W610-39-2 R2
FIGURE II-22A

CAD MAINTAINED DRAWING

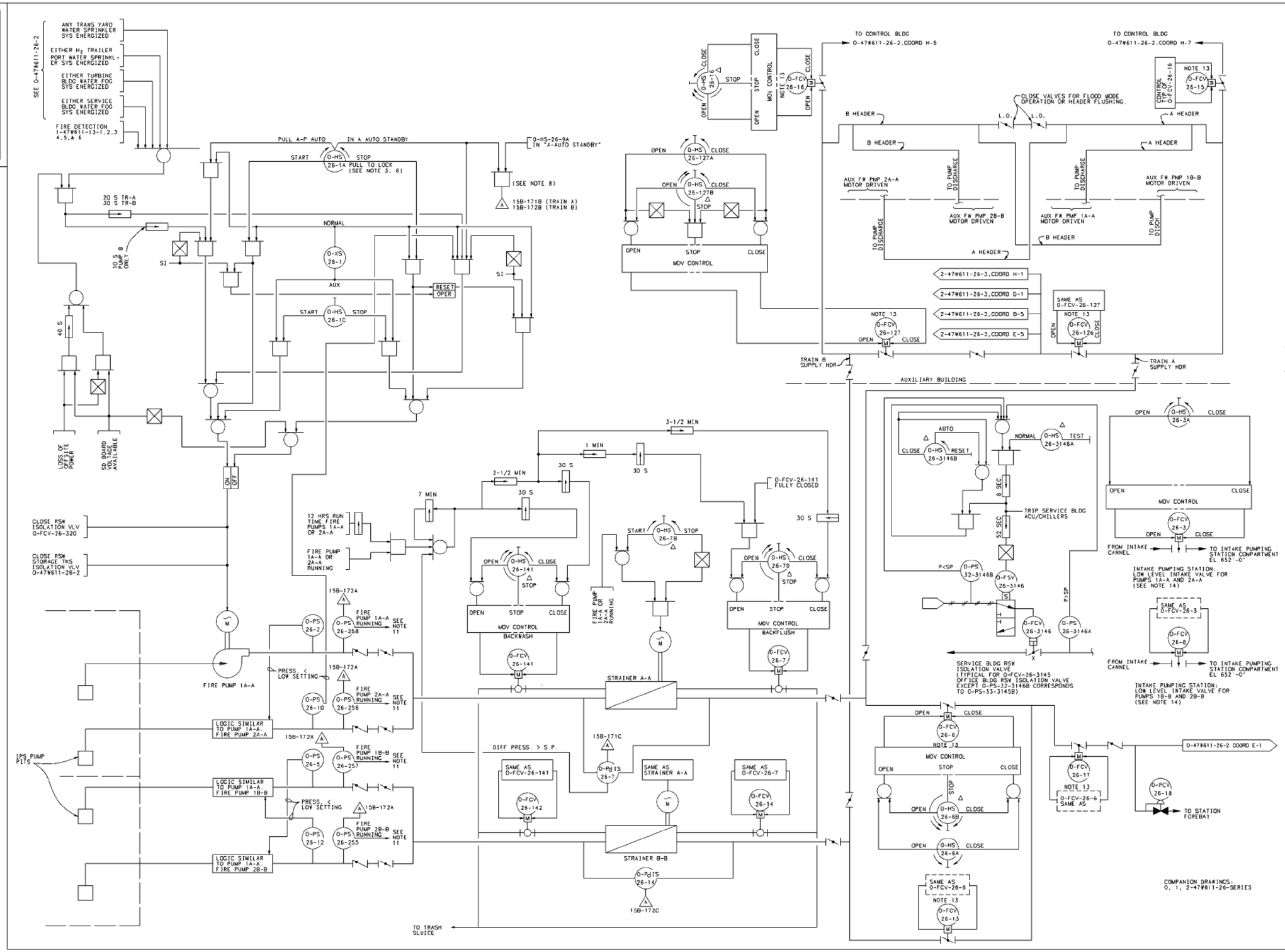

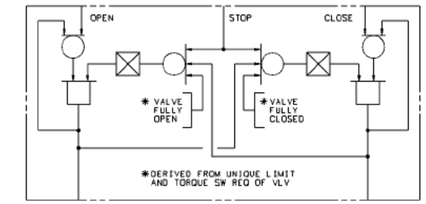

TYPICAL MOV CONTROL

NOTES:

1. FOR SYMBOLS SEE INSTRUMENTATION AND IDENTIFICTION STANDARDS LATEST ISSUE.
2. FOR COMPLETE INSTRUMENTATION AND COMPONENT TRAIN SEPARATION DESIGNATION SEE CONTROL DIAGRAM, 1-47W610-26-1.
3. FOR NORMAL OPERATION THE MAIN CONTROL SWITCH FOR ONE TRAIN A FIRE PUMP AND ONE TRAIN B FIRE PUMP WILL BE IN THE A-P AUTO POSITION. THE MAIN CONTROL SWITCHES FOR THE OTHER TWO FIRE PUMPS WILL BE IN THE A-AUTO STAND-BY POSITION.

6. ALL MAIN CONTROL ROOM W-2 TYPE SWITCHES ON THIS SHEET HAVE A PULL-TO-LOCK IN THE STOP POSITION AND ARE ANNUCIATED FOR THIS CONDITION.

8. IF BOTH TRAIN A OR BOTH TRAIN B MAIN CONTROL ROOM FIRE PUMP CONTROL SWITCHES ARE IN THE "A AUTO STANDBY" POSITION, AN ANNUNCIATOR ALERTS THE OPERATOR OF A FIRE PUMP SWITCH MISALIGNMENT.
9. FOR INSTRUMENTS THAT FALL UNDER THE LIMITED FIRE PROTECTION QUALITY ASSURANCE PROGRAM REFER TO MAXIMO
10. "DIGITAL AND ANALOG LOGIC SYMBOLS ARE USED ON LOGIC DIAGRAMS TO FUNCTIONALLY DESCRIBE THE PROCESS CONTROL. REFER TO THE ASSOCIATED WIRING SCHEMATIC FOR THE ELECTRICAL COMPONENTS USED TO IMPLEMENT THE CONTROL SCHEME".
11. INPUT TO MICROBIOLOGICAL INDUCED CORROSION (MIC) REMOVAL SYSTEM SUPPLIED ON CONTRACT 91NNA-75954A, DRAWING# BEC50001.
12. NOT USED.

13. VALVES REFERENCING THIS NOTE ARE ADMINISTRATIVELY LOCKED IN THE OPEN POSITION (WITH THE BREAKER CLOSED AND THE THERMAL OVERLOADS REMOVED) FOR APPENDIX R. THEY MUST BE CLOSED IN PREPARATION FOR FLOOD MODE.
14. 0-FCV-26-003-A AND 0-FCV-26-008-B ARE ADMINISTRATIVELY LOCKED IN THE CLOSED POSITION WITH THE BREAKER CLOSED AND THE THERMAL OVERLOADS REMOVED.

REFERENCE DRAWINGS:

1-47W611-0-1----------LOGIC DIAGRAM INDEX
0,1,2-47W610-26-SERIES---CONTROL DIAGRAMS
1-47W832-1 A -2----------FLOW DIAGRAMS
1-47W850-1 THRU -13 -----FLOW DIAGRAMS
1-45W760-26-1 THRU -5----SCHEMATIC DIAGRAMS
1-45W600-26-1 THRU -16---SCHEMATIC DIAGRAMS
45B840-41,-43,-143,-156--SWITCH DEVELOPMENTS
1-45W600-57-7----------SCHEMATIC DIAGRAMS

UFSAR AMENDMENT 4

WATTS BAR
FIRE PROTECTION
REPORT

POWERHOUSE
UNITS 1 & 2
ELECTRICAL
LOGIC DIAGRAM
HIGH PRESSURE FIRE PROTECTION
FIRE PROTECTION REPORT
TVA DWG NO. 0-47W611-26-1 R2
FIGURE II-23A

CAD MAINTAINED DRAWING

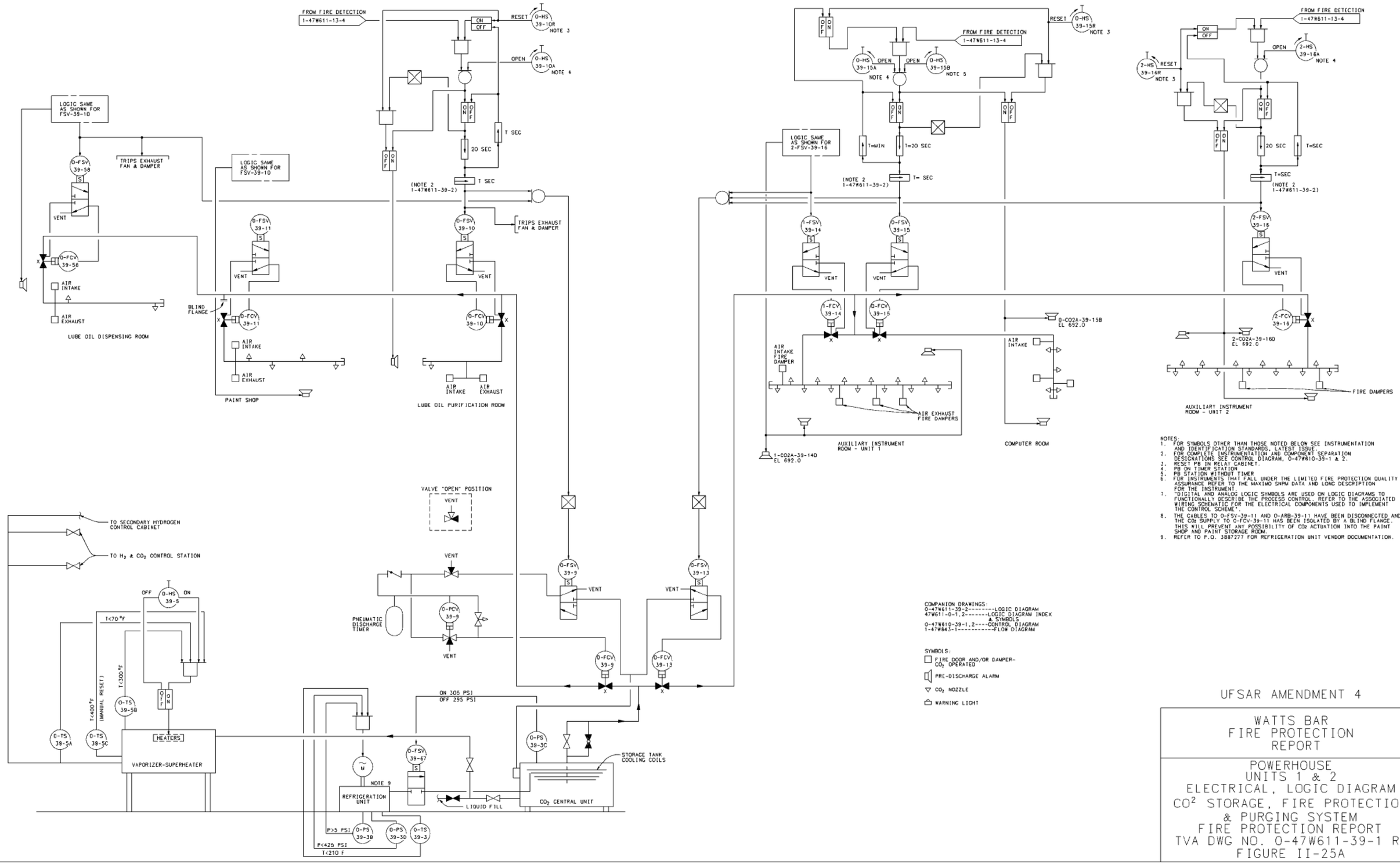

NOTES:
1. FOR SYMBOLS OTHER THAN THOSE NOTED BELOW SEE INSTRUMENTATION AND IDENTIFICATION STANDARDS, LATEST ISSUE.
2. FOR COMPLETE INSTRUMENTATION AND COMPONENT SEPARATION DESIGNATIONS SEE CONTROL DIAGRAM, 0-47W610-39-1 & 2.
3. RESET PB IN RELAY CABINET.
4. PB ON TIMER STATION.
5. PB STATION WITHOUT TIMER.
6. FOR INSTRUMENTS THAT FALL UNDER THE LIMITED FIRE PROTECTION QUALITY ASSURANCE REFER TO THE MAXIMO SNPM DATA AND LONG DESCRIPTION FOR THE INSTRUMENT.
7. "DIGITAL AND ANALOG LOGIC SYMBOLS ARE USED ON LOGIC DIAGRAMS TO FUNCTIONALLY DESCRIBE THE PROCESS CONTROL. REFER TO THE ASSOCIATED WIRING SCHEMATIC FOR THE ELECTRICAL COMPONENTS USED TO IMPLEMENT THE CONTROL SCHEME".
8. THE CABLES TO 0-FSV-39-11 AND 0-ARB-39-11 HAVE BEEN DISCONNECTED AND THE CO_2 SUPPLY TO 0-FCV-39-11 HAS BEEN ISOLATED BY A BLIND FLANGE. THIS WILL PREVENT ANY POSSIBILITY OF CO_2 ACTUATION INTO THE PAINT SHOP AND PAINT STORAGE ROOM.
9. REFER TO F.O. 3887277 FOR REFRIGERATION UNIT VENDOR DOCUMENTATION.

UFSAR AMENDMENT 4

WATTS BAR
FIRE PROTECTION
REPORT

POWERHOUSE
UNITS 1 & 2
ELECTRICAL, LOGIC DIAGRAM
CO^2 STORAGE, FIRE PROTECTION
& PURGING SYSTEM
FIRE PROTECTION REPORT
TVA DWG NO. 0-47W611-39-1 R3
FIGURE II-25A

CAD MAINTAINED DRAWING

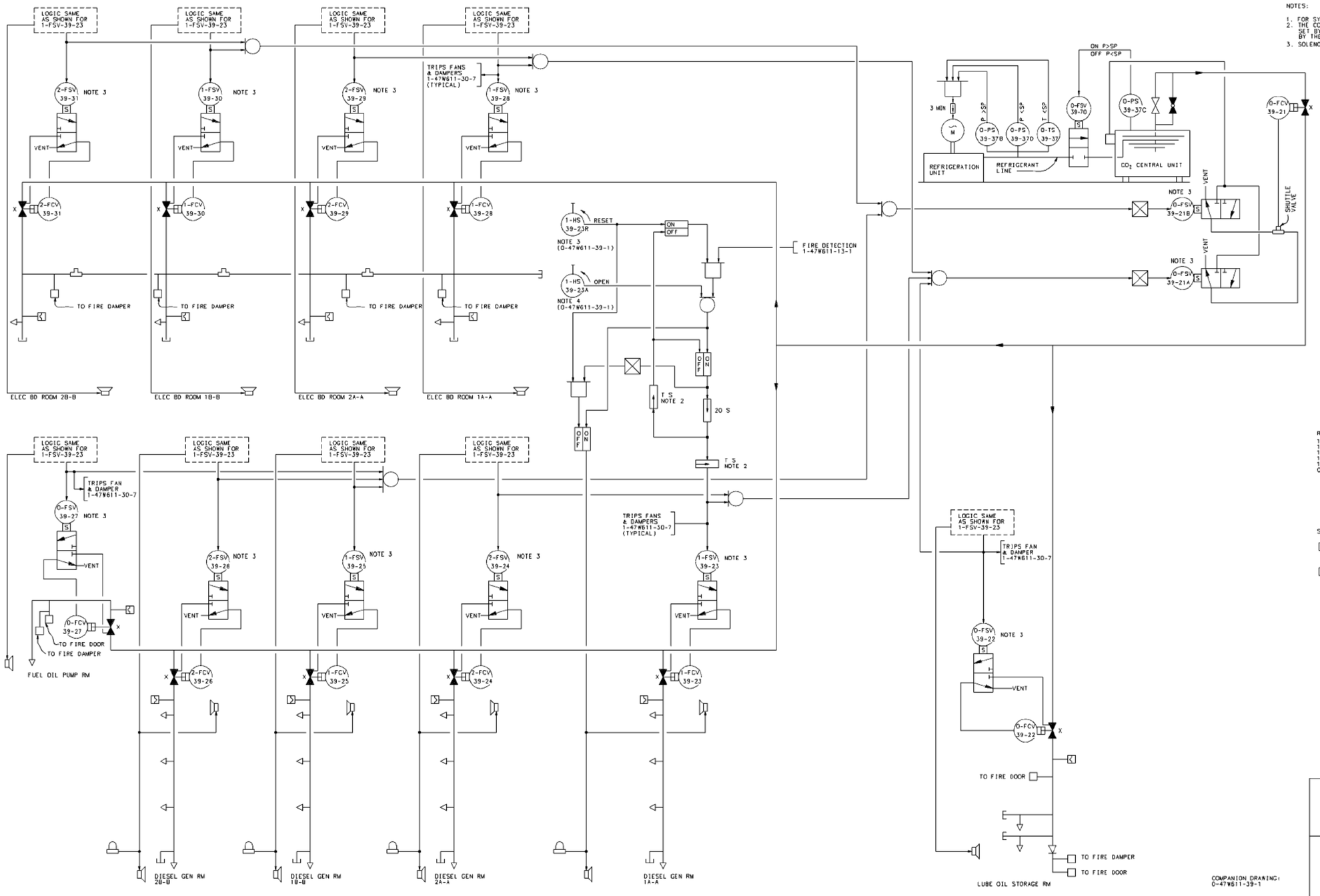

NOTES:

1. FOR SYMBOLS AND GENERAL NOTES SEE 0-47W611-39-1.
2. THE CO_2 DISCHARGE VALVES ARE HELD OPEN FOR A PRE-DETERMINED TIME SET BY A TIMER. THE AMOUNT OF TIME (T) SECONDS (S) WILL BE DETERMINED BY THE LENGTH OF TIME REQUIRED FOR THE CO_2 TO FILL EACH ROOM.
3. SOLENOID CAN BE MANUALLY OPERATED IN CASE OF POWER FAILURE.

REFERENCE DRAWINGS:

1-47W843-2--------FLOW DIAGRAM
1-45W600-39-2-----WIRING DIAGRAM
1-45W600-39-3-----WIRING DIAGRAM
1-47W611-13-1-----LOGIC DIAGRAM
1-47W611-30-7-----LOGIC DIAGRAM
0-47W610-39-2-----CONTROL DIAGRAM

SYMBOLS:

DENOTES A PRESSURE OPERATED RELEASE

DENOTES AN ODORIZER

COMPANION DRAWING: 0-47W611-39-1

UFSAR AMENDMENT 4

WATTS BAR
FIRE PROTECTION
REPORT

DIESEL GENERATOR BUILDING
UNITS 1 & 2
ELECTRICAL, LOGIC DIAGRAM
CO_2 STORAGE, FIRE PROTECTION
& PURGING SYSTEM
FIRE PROTECTION REPORT
TVA DWG NO. 0-47W611-39-2 R2
FIGURE II-26A

CAD MAINTAINED DRAWING

UFSAR AMENDMENT 4

WATTS BAR
FIRE PROTECTION
REPORT

AUXILIARY BUILDING UNITS 1 & 2
FIRE PROTECTION
COMPARTMENTATION - FIRE CELLS
PLAN EL 692.0
FIRE PROTECTION REPORT
TVA DWG NO. 0-47W240-1 R1
FIGURE II-28A

CAD MAINTAINED DRAWING

UFSAR AMENDMENT 4

WATTS BAR
FIRE PROTECTION
REPORT

AUX & REACTOR BUILDING
UNITS 1 AND 2 FIRE PROTECTION
COMPARTMENTATION - FIRE CELLS
PLAN EL 729.0 & 737.0
FIRE PROTECTION REPORT
TVA DWG NO. 0-47W240-3 R1
FIGURE II-30A

CAD MAINTAINED DRAWING

UFSAR AMENDMENT 4

WATTS BAR
FIRE PROTECTION
REPORT

AUX & REACTOR BUILDING
UNITS 1 AND 2 FIRE PROTECTION
COMPARTMENTATION - FIRE CELLS
PLAN EL 772.0, 782.0 & 786.0
FIRE PROTECTION REPORT
TVA DWG NO. 0-47W240-5 R1
FIGURE II-32A

CAD MAINTAINED DRAWING

UFSAR AMENDMENT 4

WATTS BAR
FIRE PROTECTION
REPORT

DIESEL GENERATOR BUILDING
UNITS 1 & 2 FIRE PROTECTION
COMPARTMENTATION - FIRE CELLS
PLAN EL 742.0 & 760.5
FIRE PROTECTION REPORT
TVA DWG NO. 0-47W240-8 R1
FIGURE II-35A

CAD MAINTAINED DRAWING

UFSAR AMENDMENT 4

WATTS BAR
FIRE PROTECTION
REPORT

WATER SUPPLY INTAKE PUMPING STATION
UNITS 1 & 2
FIRE PROTECTION
COMPARTMENTATION - FIRE CELLS
PLAN EL 726.0 & 728.0
FIRE PROTECTION REPORT
TVA DWG NO. 0-17W210-9 R1
FIGURE II-36A

CAD MAINTAINED DRAWING

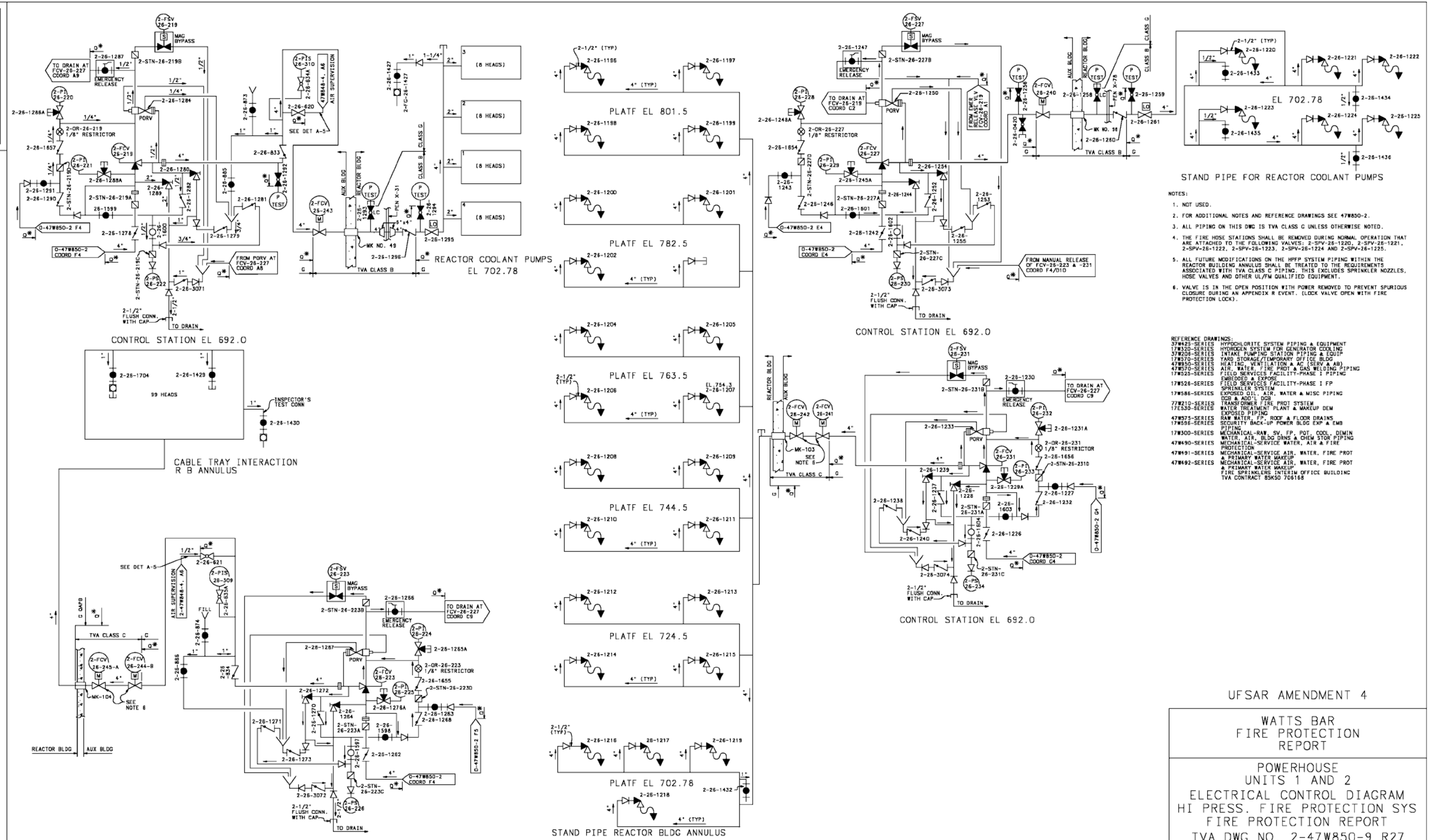

NOTES:

1. NOT USED.
2. FOR ADDITIONAL NOTES AND REFERENCE DRAWINGS SEE 47W850-2.
3. ALL PIPING ON THIS DWG IS TVA CLASS G UNLESS OTHERWISE NOTED.
4. THE FIRE HOSE STATIONS SHALL BE REMOVED DURING NORMAL OPERATION THAT ARE ATTACHED TO THE FOLLOWING VALVES: 2-SPV-26-1220, 2-SPV-26-1221, 2-SPV-26-1222, 2-SPV-26-1223, 2-SPV-26-1224 AND 2-SPV-26-1225.
5. ALL FUTURE MODIFICATIONS ON THE HPFP SYSTEM PIPING WITHIN THE REACTOR BUILDING ANNULUS SHALL BE TREATED TO THE REQUIREMENTS ASSOCIATED WITH TVA CLASS C PIPING. THIS EXCLUDES SPRINKLER NOZZLES, HOSE VALVES AND OTHER UL/FM QUALIFIED EQUIPMENT.
6. VALVE IS IN THE OPEN POSITION WITH POWER REMOVED TO PREVENT SPURIOUS CLOSURE DURING AN APPENDIX R EVENT. (LOCK VALVE OPEN WITH FIRE PROTECTION LOCK).

REFERENCE DRAWINGS:

37W423-SERIES	HYPOCHLORITE SYSTEM PIPING & EQUIPMENT
17W320-SERIES	HYDROGEN SYSTEM FOR GENERATOR COOLING
37W206-SERIES	INTAKE PUMPING STATION PIPING & EQUIP
17W570-SERIES	YARD STORAGE/TEMPORARY OFFICE BLDG
47W850-SERIES	HEATING, VENTILATION & AC (SERV & AB)
47W570-SERIES	AIR, WATER, FIRE PROT & GAS WELDING PIPING
17W525-SERIES	FIELD SERVICES FACILITY-PHASE I PIPING EMBEDDED & EXPOSE
17W526-SERIES	FIELD SERVICES FACILITY-PHASE I FP SPRINKLER SYSTEM
17W586-SERIES	EXPOSED OIL, AIR, WATER & MISC PIPING DGB & ADD'L DGB
77W210-SERIES	TRANSFORMER FIRE PROT SYSTEM
17E630-SERIES	WATER TREATMENT PLANT & MAKEUP DEM EXPOSED PIPING
47W575-SERIES	RAW WATER, FP, ROOF & FLOOR DRAINS
17W556-SERIES	SECURITY BACK-UP POWER BLDG EXP & EMB PIPING
17W300-SERIES	MECHANICAL-RAW, SV, FP, POT, COOL, DEMIN WATER, AIR, BLDG DRNS & CHEM STOR PIPING
47W490-SERIES	MECHANICAL-SERVICE WATER, AIR & FIRE PROTECTION
47W491-SERIES	MECHANICAL-SERVICE AIR, WATER, FIRE PROT & PRIMARY WATER MAKEUP
47W492-SERIES	MECHANICAL-SERVICE AIR, WATER, FIRE PROT & PRIMARY WATER MAKEUP
	FIRE SPRINKLERS INTERIM OFFICE BUILDING TVA CONTRACT 85K50 706168

UFSAR AMENDMENT 4

WATTS BAR
FIRE PROTECTION
REPORT

POWERHOUSE
UNITS 1 AND 2
ELECTRICAL CONTROL DIAGRAM
HI PRESS. FIRE PROTECTION SYS
FIRE PROTECTION REPORT
TVA DWG NO. 2-47W850-9 R27
FIGURE II-41A

CAD MAINTAINED DRAWING

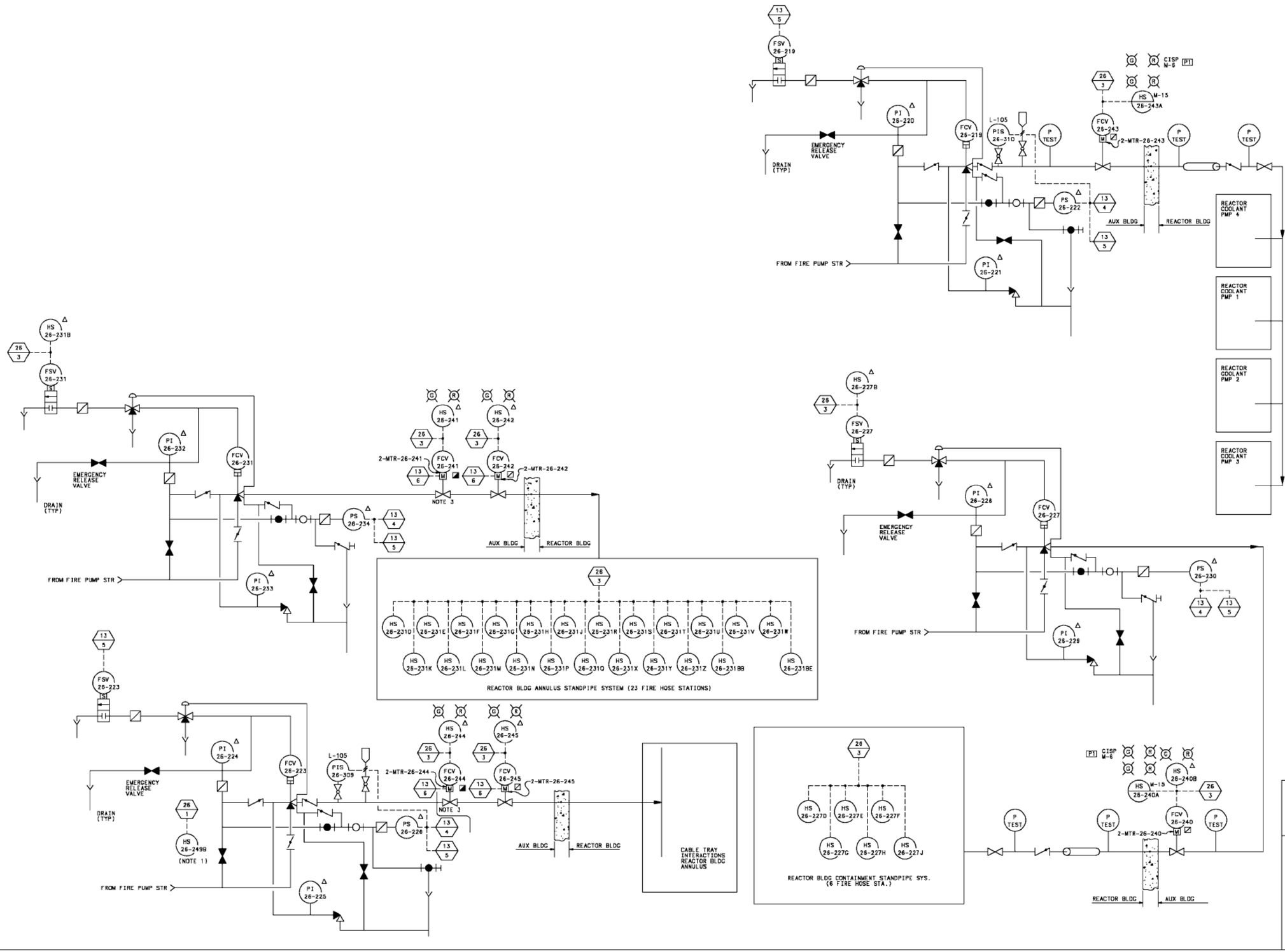

NOTES:

1. FIRE PUMP START SWITCHES LOCATED AT THE EMERGENCY RELEASE VALVES FOR THE PREACTION SPRINKLER FLOW CONTROL VALVES. FCV-26-219, 223, 227, AND 231 ARE LOCATED AT A COMMON STATION.
2. NOT USED.
3. 2-FCV-26-241-B, 2-FCV-26-242-A, 2-FCV-26-244-B, AND 2-FCV-26-245-A ARE ADMINISTRATIVELY LOCKED IN THE OPEN POSITION WITH THE BREAKER OPEN.

SYMBOLS:

UFSAR AMENDMENT 4

WATTS BAR
FIRE PROTECTION
REPORT

POWERHOUSE
UNITS 1 & 2
ELECTRICAL CONTROL DIAGRAM
HI PRESS. FIRE PROTECTION SYS
FIRE PROTECTION REPORT
TVA DWG NO. 2-47W610-26-7 R10
FIGURE II-43A

CAD MAINTAINED DRAWING

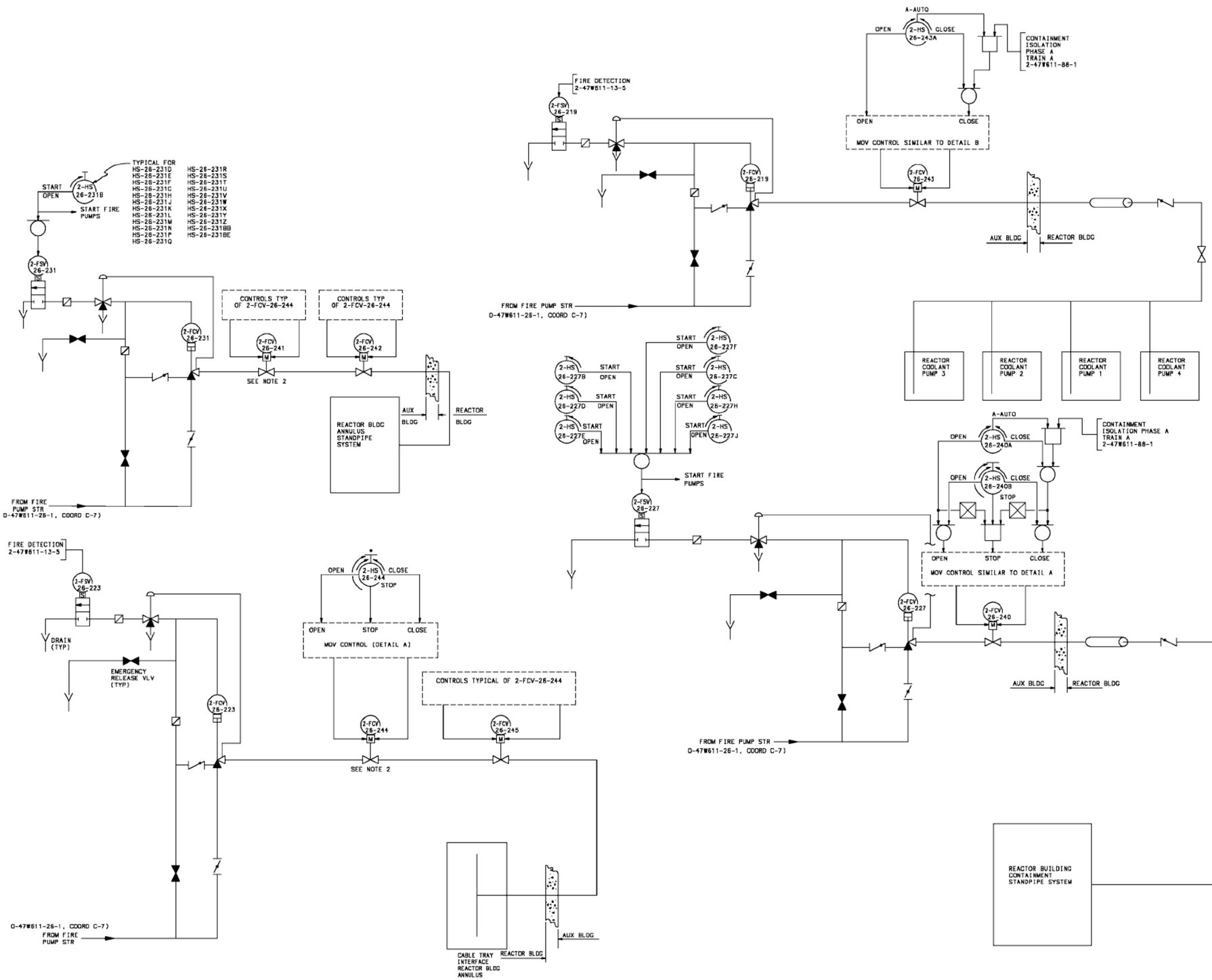

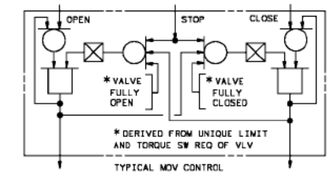

DETAIL A

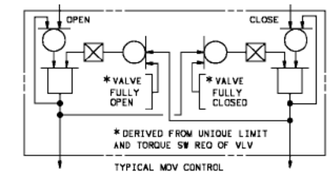

DETAIL B

NOTES:

1. NOT USED.
2. 2-FCV-26-241-B & 2-FCV-26-242-A ARE ADMINISTRATIVELY LOCKED IN THE OPEN POSITION WITH THE BREAKER OPEN. 2-FCV-26-244-B & 2-FCV-26-245-A ARE ADMINISTRATIVELY LOCKED IN THE OPEN POSITION WITH THE BREAKER OPEN.

UFSAR AMENDMENT 4

WATTS BAR
FIRE PROTECTION
REPORT

POWERHOUSE
UNITS 1 & 2
ELECTRICAL CONTROL DIAGRAM
HI PRESS. FIRE PROTECTION SYS
FIRE PROTECTION REPORT
TVA DWG NO. 2-47W611-26-3 R12
FIGURE II-46A