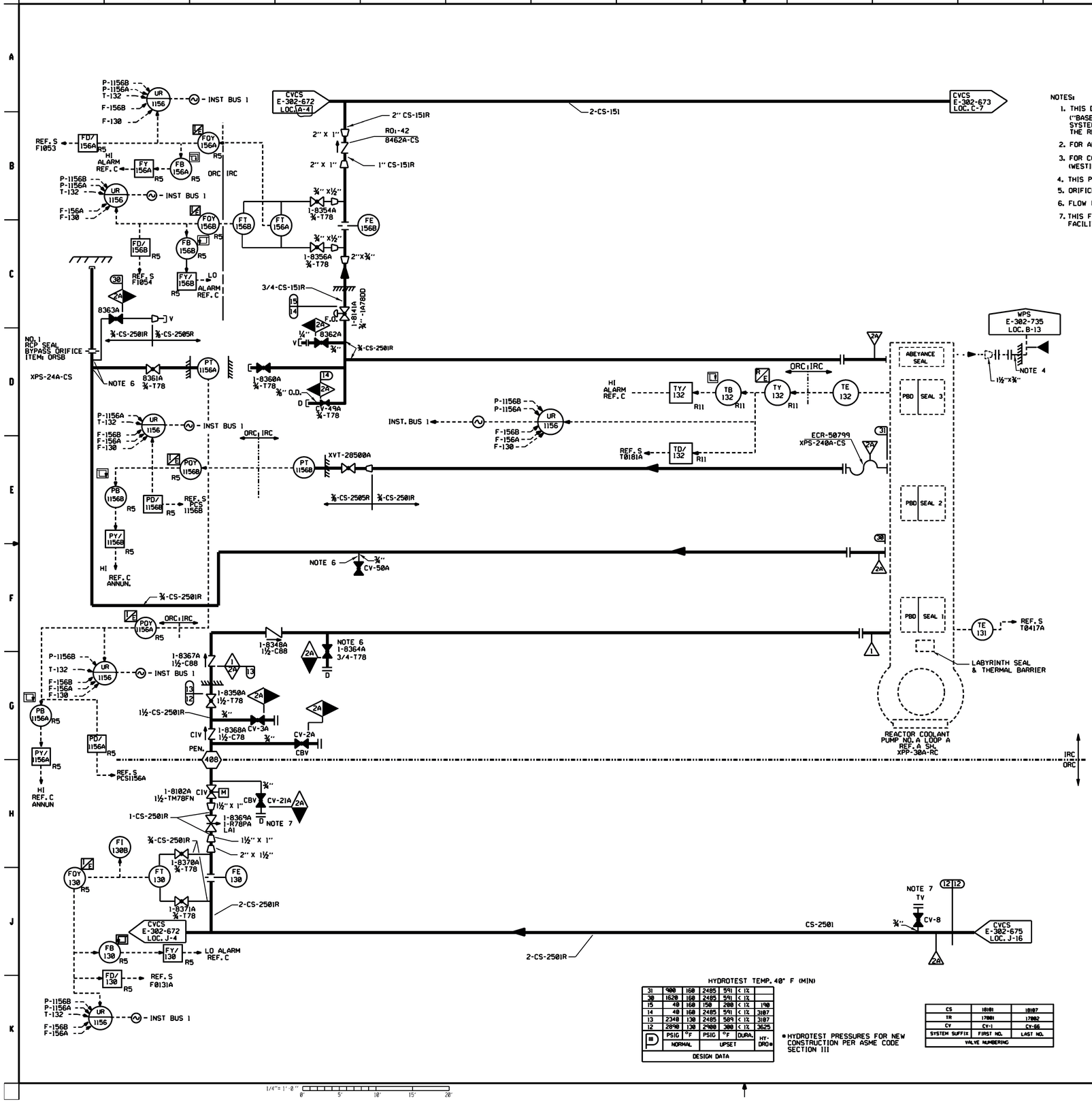

NOTES:

1. THIS DRAWING IS BASED UPON DWG. 114E073, SHEET 1 OF 5, REVISION 16 ("BASED DRAWING") OF WESTINGHOUSE ELECTRIC CORPORATION, NUCLEAR ENERGY SYSTEMS, PITTSBURGH, PA WHO IS SOLEY RESPONSIBLE FOR THE ACCURACY OR THE RELIABILTY OF THE DESIGN INFORMATION SET FORTH IN THE BASE DRAWING.
2. FOR ALPHA REFERENCES, SEE DWG. E-302-002, FLOW DIAGRAM LEGEND.
3. FOR CONVENTIONAL PIPING SPECIFICATIONS, SEE GAI SPECIFICATION SP-329-04461-00, PAGE 29, (WESTINGHOUSE PIPE CLASS CONVERSION TO ENGINEER'S PIPE LINE SPECIFICATION).
4. THIS PIPING SHOULD BE SLOPED DOWNWARD THROUGHOUT THE RUN TO THE DRAIN TANK.
5. ORIFICE IS A MINMUM OF 7' ABOVE THE CONNECTION TO THE REACTOR COOLANT PUMP.
6. FLOW RESTRICTOR IS INSTALLED IN THE PIPING.
7. THIS FLANGE HAS BEEN DRILLED AND TAPPED TO ACCEPT A ⅜" COMPRESSION FITTING TO FACILITATE LLRT WORK. THE FITTING SHOULD BE CAPPED AT OTHER TIMES.

HYDROTEST TEMP. 40° F (MIN)

31	900	150	2485	591	< 1%	
30	1620	150	2485	591	< 1%	
15	40	150	150	200	< 1%	190
14	40	150	2485	591	< 1%	3107
13	2340	130	2485	589	< 1%	3107
12	2898	130	2900	300	< 1%	3625
30	PSIG	°F	PSIG	°F	DURA.	HY-DRO*
	NORMAL		UPSET			
DESIGN DATA						

CS	18101	18107
TR	17001	17002
CV	CV-1	CV-66
SYSTEM SUFFIX	FIRST NO.	LAST NO.
VALVE NUMBERING		

*HYDROTEST PRESSURES FOR NEW CONSTRUCTION PER ASME CODE SECTION III

THE ASSOCIATED 307 DRAWING SHALL BE REVISED IN CONJUNCTION WITH REVISION TO THIS 302 IF THE CROSS HATCHED AREA IS AFFECTED.

ESSENTIAL

THIS IS A NUCLEAR SAFETY RELATED DOCUMENT. NO DEVIATION SHALL BE INITIATED OR PERFORMED WITHOUT PRIOR DOCUMENTATION AND WRITTEN APPROVAL.

DRAWING LEGIBILITY CLASS 1
SCE&G CAD ENHANCED

NO.	DATE	BY	REVISION	DRN BY	CHK BY
9	7/14/97	RHM	REVISED PER ECR-70818	MGR	LRC
8	12/2/93	JMR	CADD ENHANCED PER ECR-50239	MGR	DDJ
7	8/18/98	JMR	REVISED PER CCSS-97-0569	LEK	MGR
12	1/2/08	RHM	REVISED PER ECR-50799	AC	SY
11	4/2/08	JMR	REVISED PER ECR-50799	RHM	SY
10	9/25/08	RHM	REVISED PER ECR-50799B	MGR	TMH

FSAR Figure 9.3-16 SH. 1A

SOUTH CAROLINA ELECTRIC & GAS COMPANY
VIRGIL C. SUMMER NUCLEAR STATION
PIPING — SYSTEM FLOW DIAGRAM
CHEMICAL AND VOLUME CONTROL

DESIGN ENGINEERING
U.S. ARMY CORPS OF ENGINEERS
A.V.N. | M.G.R. | R.S.B.
E-302-671 | 12
DRAWING NUMBER | REV. NUMBER