Constellation

4300 Winfield Road
Warrenville, IL 60555
630 657 2000 Office

PROPRIETARY INFORMATION – WITHHOLD UNDER 10 CFR 2.390

RS-22-064 10 CFR 50.90
June 8, 2022

U.S. Nuclear Regulatory Commission
ATTN: Document Control Desk
Washington, DC 20555-0001

Dresden Nuclear Power Station, Units 2 and 3
Renewed Facility Operating License Nos. DPR-19 and DPR-25
NRC Docket Nos. 50-237, and 50-249

Subject: License Amendment Request Regarding New Fuel Storage Vault and Spent Fuel Storage Pool Criticality Methodologies with Proposed Change to Technical Specifications Section 4.3.1

In accordance with 10 CFR 50.90, "Application for amendment of license, construction permit, or early site permit," Constellation Energy Generation, LLC (CEG) requests an amendment to Renewed Facility Operating License Nos. DPR-19 and DPR-25 for Dresden Nuclear Power Station (DNPS), Units 2 and 3, respectively. Specifically, CEG is adopting a new criticality safety analysis (CSA) methodology for performing the criticality safety evaluation for legacy fuel types in addition to the GNF3 reload fuel in the spent fuel pool (SFP). Use of the new SFP CSA methodology requires a change to the DNPS Technical Specifications (TS) 4.3.1, "Criticality." CEG is also proposing a change to the new fuel vault (NFV) CSA to utilize the GESTAR II methodology for validating the NFV criticality safety for GNF3 fuel in the General Electric (GE) designed NFV racks.

A separate amendment request will be submitted to support the transition to GNF3 fuel at DNPS. While the revised SFP CSA and the altered NFV CSA basis support the planned transition to GNF3 fuel, neither the new analysis or the altered analysis basis is required to support the NRC review and approval of the separate fuel transition amendment request planned for submittal in late summer 2022.

Attachment 1 provides the evaluation of proposed changes. Attachment 2 provides the existing TS pages marked up to show the proposed changes. Attachment 3 contains the non-proprietary version of NEDO-33938, "Dresden Nuclear Power Station Fuel Storage Criticality Safety Analysis," Revision 0, dated April 2022. Attachment 4 contains the Criticality Analysis Checklist from NEI 12-16, "Guidance for Performing Criticality Analyses of Fuel Storage at Light-Water Reactor Power Plants," Revision 4.

Attachment 6 contains proprietary information to be withheld from public disclosure in accordance with 10 CFR 2.390, as documented by the signed affidavit in Attachment 5. The affidavit sets forth the basis on which GNF's information may be withheld from public disclosure by the NRC and addresses with specificity the considerations listed in 10 CFR 2.390(b)(4), "Public inspections, exemptions, requests for withholding." Accordingly, it is respectfully requested that the information, which is proprietary to GNF be withheld from public disclosure. A non-proprietary version of the report is provided in Attachment 3.

The proposed changes have been evaluated in accordance with 10 CFR 50.91(a)(1) using the criteria in 10 CFR 50.92(c), and it has been determined that the proposed changes involve no significant hazards consideration.

The proposed changes have been reviewed and approved by the Plant Operations Review Committee at DNPS in accordance with the requirements of the CEG Quality Assurance Program.

CEG requests approval of the proposed changes by June 8, 2023. Once approved, the amendment shall be implemented within 60 days.

In accordance with 10 CFR 50.91, "Notice for public comment; State consultation," paragraph (b), CEG is notifying the State of Illinois of this application for license amendment by transmitting a copy of this letter and its attachments to the designated State Officials.

There are no regulatory commitments contained in this letter. Should you have any questions concerning this letter, please contact Mrs. Linda M. Palutsis at (630) 657-2821.

I declare under penalty of perjury that the foregoing is true and correct. Executed on the 8th day of June 2022.

Respectfully,

Patrick R. Simpson
Sr. Manager Licensing
Constellation Energy Generation, LLC

Attachments:

1. Evaluation of Proposed Changes
2. Markup of Proposed Technical Specification Pages
3. NEDO-33938, "Dresden Nuclear Power Station Fuel Storage Criticality Safety Analysis," Revision 0, dated April 2022 (**Non-Proprietary Version**)
4. NEI 12-16 Appendix C, Criticality Analysis Checklist
5. Global Nuclear Fuels - Americas, LLC 10 CFR 2.390 Affidavit
6. NEDC-33938P, "Dresden Nuclear Power Station Fuel Storage Criticality Safety Analysis," Revision 0, dated April 2022 (**Proprietary Version**)

cc: U.S. NRC Region III, Regional Administrator
U.S. NRC Senior Resident Inspector, Dresden Nuclear Power Station
Illinois Emergency Management Agency – Division of Nuclear Safety

ATTACHMENT 1
Evaluation of Proposed Changes

Subject: License Amendment Request Regarding New Fuel Storage Vault and Spent Fuel Storage Pool Criticality Methodologies with Proposed Change to Technical Specifications Section 4.3.1

TABLE OF CONTENTS

1.0 SUMMARY DESCRIPTION

2.0 DETAILED DESCRIPTION

- 2.1 Spent Fuel Pool Criticality Safety Analysis
- 2.2 New Fuel Vault Criticality Safety Analysis
- 2.3 Proposed Changes to Technical Specifications Section 4.3.1

3.0 TECHNICAL EVALUATION

- 3.1 Spent Fuel Pool Criticality Safety Analysis
  - 3.1.1 Overview of System Design and Operation
  - 3.1.2 Criticality Evaluation
  - 3.1.3 Accident Conditions
- 3.2 New Fuel Vault Criticality Safety Analysis

4.0 REGULATORY EVALUATION

- 4.1 Applicable Regulatory Requirements/Criteria
- 4.2 Precedent
- 4.3 No Significant Hazards Consideration
- 4.4 Conclusions

5.0 ENVIRONMENTAL CONSIDERATION

6.0 REFERENCES

1.0 SUMMARY DESCRIPTION

In accordance with 10 CFR 50.90, "Application for amendment of license, construction permit, or early site permit," Constellation Energy Generation, LLC (CEG) requests an amendment to Renewed Facility Operating License Nos. DPR-19 and DPR-25 for Dresden Nuclear Power Station (DNPS), Units 2 and 3, respectively. Specifically, CEG is adopting a new criticality safety analysis (CSA) methodology (Reference 6.1) for performing the criticality safety evaluation for legacy fuel types in addition to the GNF3 reload fuel in the spent fuel pool (SFP). Use of the new SFP CSA methodology requires a change to the DNPS Technical Specifications (TS) 4.3.1, "Criticality." CEG is also proposing a change to the new fuel vault (NFV) CSA to utilize the GESTAR II methodology (Reference 6.2) for validating the NFV criticality safety for GNF3 fuel in the General Electric (GE) designed NFV racks.

2.0 DETAILED DESCRIPTION

2.1 Spent Fuel Pool Criticality Safety Analysis

CEG will be transitioning from the ATRIUM 10XM fuel design to the GNF3 fuel design at DNPS beginning in the fall of 2023. The previous SFP CSA (see Reference 6.5) was prepared by Holtec International Inc. (Holtec). The CSA for the DNPS SFPs is being re-baselined by GNF to:

- Simplify the validation of GNF3 fuel designs against the CSA criteria. The new analysis will move DNPS away from the need to validate the in-rack k_{inf} value for each new lattice design to now validating the standard cold core geometry (SCCG) k_{inf} value against the defined limit. The SCCG k_{inf} value is generated for every lattice in each assembly design as part of the standard calculation set.

- Provide a higher level of consistency among the BWR criticality safety analyses of record (AOR) methods utilized across the fleet. This also includes the methods utilized to verify new GNF3 fuel designs against the criticality safety AOR limitations as listed in the TS.

The reason for this license amendment is the re-baselined SFP CSA's change from Holtec methodology to GNF methodology. The proposed methodology change requires NRC approval prior to using the CSA in support of storage of fuel in the DNPS Unit 2 and Unit 3 SFPs. The DNPS Unit 2 and Unit 3 SFP racks are designed to accommodate BWR fuel. Both pools' SFP racks credit Boral panels as the neutron absorbing material. The revised analysis shows that the effective neutron multiplication factor (k_{eff}) in the SFP racks fully loaded with fuel of the highest anticipated reactivity, at a temperature corresponding to the highest reactivity, does not exceed the 10 CFR 50.68(b) regulatory limit of 0.95 at a 95 percent probability, 95 percent confidence level. Reactivity effects of abnormal and accident conditions are also evaluated to assure that under all credible abnormal and accident conditions, the reactivity will not exceed the regulatory limit.

The SFP analysis is performed consistent with 10 CFR 50.68 requirements and industry guidance, including Nuclear Energy Institute (NEI) Report 12-16, Revision 4, "Guidance for Performing Criticality Analyses of Fuel Storage at Light-Water Reactor Power Plants," (Reference 6.4). Guidance pertaining to soluble boron in the SFP is not applicable because DNPS is a BWR plant and has no soluble boron in the SFP. The calculations are performed using GNF's method of analyzing SCCG k_{inf} values and in-rack k_{inf} values and validating the linear correlation between these parameters across a wide range of k_{inf} values. The method then demonstrates that maintaining all fuel below the chosen SCCG k_{inf} upper limit results in an in rack k_{eff} value no greater than 0.95 after accounting for biases and uncertainties (i.e., k_{max} (95/95) ≤ 0.95). The revised CSA covers all legacy fuel in storage in either the DNPS Unit 2 or Unit 3 SFP and the new GNF3 product line. A copy of the NEI 12-16 Criticality Analysis Checklist is included as Attachment 4 to identify the areas of the analysis that conform or do not conform to the guidance in NEI 12-16. Additional information is provided for any deviation from NEI 12-16 in the Attachment 4 checklist.

The change in the SFP CSA AOR requires a change to TS Section 4.3.1, "Criticality." The specifics of the TS change are provided in Section 2.3.

2.2 New Fuel Vault Criticality Safety Analysis

The DNPS NFV racks are GE designed low density racks with a center-to-center spacing within a given row of 6.625 inches and an interrack spacing of 11.06 inches. The NFV rack CSA coverage for the new GNF3 fuel will be the GESTAR II (Reference 6.2) analysis for GE designed low density NFV racks, upon approval of this proposed license amendment. The previous NFV CSA will no longer be applicable to DNPS upon implementation of this license amendment because the only fuel to be delivered to the site for core reloads will be GNF3.

No TS change is needed for implementation of the GESTAR II NFV CSA methodology. The SCCG limit of k_{inf} ≤ 1.31 is the GESTAR II basis NFV CSA limit for DNPS storage of fresh GNF3 fuel.

Section 3.2 provides additional details on the applicability of the GESTAR II NFV CSA methodology.

2.3 Proposed Changes to Technical Specifications Section 4.3.1

The DNPS, Units 2 and 3, TS requirements related to spent fuel storage are contained in TS Section 4.3, "Fuel Storage." TS 4.3.1, "Criticality," identifies requirements pertaining to the design of the SFP storage racks. Specifically, TS 4.3.1.1.a requires k_{eff} to be ≤ 0.95 if fully flooded with unborated water, which includes an allowance for uncertainties as described in Section 9.1.2 of the Updated Final Safety Analysis Report (UFSAR). TS 4.3.1.1.b requires a nominal 6.30-inch center to center distance between fuel assemblies placed in the SFP storage racks in both pools. Neither of these sections require update because of the proposed change in CSA methodology.

The governing k_{inf} limit structure for acceptable SFP fuel storage in TS 4.3.1.1.c is replaced with a new condition in accordance with the new CSA basis as shown below.

Current TS 4.3.1.1.c	Proposed TS 4.3.1.1.c
The combination of U-235 enrichment and gadolinia loading shall be limited to ensure fuel assemblies have a maximum k-infinity of 0.8895 as determined at 39.2ºF in the normal spent fuel pool in-rack configuration.	Fuel assemblies having a maximum k_{inf} of 1.33 in the normal reactor core configuration at cold conditions.

A mark-up of the proposed TS change is provided in Attachment 2. There are no TS Bases associated with Chapter 4, "Design Features." The DNPS UFSAR will be updated in accordance with 10 CFR 50.71(e) as part of implementation of the approved amendment. A summary of the proposed changes is provided below.

- An Issue Report was written on UFSAR Section 9.1.1.2, "Facilities Description," to correct an error discovered in the stated dimensions of the NFV. The UFSAR section is being updated to the correct dimensions, as shown on construction drawings of the DNPS NFV. The NFV storage dimensions have not been changed since construction of DNPS.
- Section 9.1.1.3, "Safety Evaluation," will be modified to reflect the NFV requirements of 10 CFR 50.68(b)(2) in this section and update cross-reference to ATRIUM 10XM fuel with GNF3 fuel.
- Section 9.1.2.3.1, "High-Density Fuel Racks," will be modified to reflect the characteristics of the new SFP CSA covering all fuel types.
- Section 9.1.5, "References," will be updated for consistency with other changes made in Section 9.1.

3.0 TECHNICAL EVALUATION

3.1 Spent Fuel Pool Criticality Safety Analysis

3.1.1 Overview of System Design and Operation

The DNPS UFSAR Section 9.1.2, "Spent Fuel Storage," documents the combined units' SFP safety design bases as follows:

A. There will be no release of contamination or exposure of personnel to radiation in excess of 10 CFR 20 limits;
B. The storage space in each of the Unit 2 and Unit 3 spent fuel pools is designed for a maximum of 3537 irradiated fuel assemblies;
C. It is possible, at any time, to perform limited work on irradiated components;
D. Space is provided for used control rods, flow channels, and other reactor components;
E. The spent fuel pool is designed to withstand earthquake loadings of a Class I structure; and
F. The spent fuel assembly racks are designed to ensure subcriticality in the storage pool. A maximum k_{eff} of 0.95 is maintained with the racks fully loaded with fuel of the highest

anticipated reactivity and flooded with unborated water at a temperature corresponding to the highest reactivity.

To achieve the safety design bases DNPS has two separate SFPs which provide for storage of unirradiated and irradiated fuel in a safe manner.

The DNPS SFPs are identical in the types of SFP racks and neutron absorbing materials used. Each spent fuel pool contains 33 high-density spent fuel storage racks which provide storage for 3537 fuel assemblies. There are 18 racks arranged in a 9x11 array and 15 racks arranged in a 9x13 array. The racks are constructed to form tubes of adequate size for fuel storage. The tubes are welded together along their length with angles or clips to provide the inter-tube connection. The center-to-center distance between assemblies stored in tubes is 6.30 in. x 6.30 in.

The fuel storage tube is constructed of stainless-steel-bearing Boral neutron absorbing material. Boral is a sandwich-type plate that has outer surfaces of Type 1100 aluminum and a core of boron carbide (B4C) uniformly dispersed in a matrix of Type 1100 aluminum. These plates are enclosed by inner and outer tubes made of Type 304 stainless steel designed to permit spent fuel pool water to enter and exit the Boral area. The inner and outer tubes maintain the Boral plate structural integrity during vibratory events. The plates are not required to carry load. The individual neutron absorbing tubes are connected in a checkerboard pattern forming the rack assembly.

Each rack consists of a base assembly with legs and with plates along the edges and across the midpoint. A fuel support plate fabricated from 3/16-inch plate is provided in each storage position to hold one fuel assembly. The support plate is elevated 12.37 inches above the spent fuel pool floor and is welded to the lower end of the tube. Cooling water flows through holes and/or slots in the sides of the support plates into the storage tubes to cool the stored fuel. Along the side of the rack, a filler plate assembly is welded between the absorber tube assemblies to enclose the space between neutron absorbing tubes. The racks are designed to prevent application of excessive vertical forces from the fuel handling system.

The specific Boral panels used at DNPS have a minimum certified ^{10}B areal density of 0.020 g/cm^2.

The spent fuel storage racks are designed to maintain the stored spent fuel in a spatial geometry that precludes the possibility of criticality. The spent fuel storage racks maintain this subcritical geometry when subjected to maximum earthquake conditions, dropped fuel assembly accident conditions, and any uplift forces generated by the fuel handling equipment.

3.1.2 Criticality Evaluation

In accordance with 10 CFR 50.68, the CSA for the DNPS Unit 2 SFP and Unit 3 SFP has been revised to support the purposes discussed in Section 2.1. The analysis, provided as Attachment 6, demonstrates that the maximum k_{eff} (i.e., k_{max}(95/95)) is less than the 10 CFR 50.68 limit of 0.95 for normal and credible abnormal operation with tolerances and computational uncertainties considered. All necessary requirements as outlined in

NUREG-0800, "Standard Review Plan for the Review of Safety Analysis Reports for Nuclear Power Plants," Section 9.1.1, Revision 3 dated March 2007, have been met. NEI 12-16, Revision 4 (Reference 6.4) was used as guidance for this analysis.

The revised CSA covers all legacy fuel in storage in either the DNPS Unit 2 or Unit 3 SFP and the new GNF3 product line. The description of the GNF3 product line is provided in Section 4.1 of Attachment 6, while the description of legacy fuel is provided in Appendix B of Attachment 6.

The calculations are performed using GNF's peak in-core k_{inf} methodology. The peak in-core k_{inf} criterion method relies on a well-characterized relationship between the infinite lattice k_{inf} (in-core) for a given fuel design and a specific fuel storage rack k_{inf} (in-rack) containing that fuel. This methodology was shown to be appropriate for use at DNPS by validating that there exists a well-characterized, linear relationship between the infinite lattice k_{inf} (in-core) and fuel storage rack k_{inf} (in-rack). Appropriate application was also ensured by using a design basis lattice with conservative values of rack efficiency and in-core k_{inf} for all criticality analyses.

Appendix B of Attachment 6 shows that this method produces an in-core k_{inf} which correlates to an in-rack k_{inf} for GNF3 fuel that bounds the legacy fuel. This is in line with the requirements in 10 CFR 50.68(b) and NEI 12-16, Revision 4 (Reference 6.4). The CSA uses the minimum certified ^{10}B areal density of 0.020 g/cm^2 in the Boral containing spent fuel racks at DNPS.

The peak reactivity of the fuel in the DNPS SFP storage racks was calculated using the computer codes TGBLA06 and MCNP-05P. In this evaluation, in-core k_{inf} values and exposure dependent, pin-by-pin isotopic specifications were generated using TGBLA06, the NRC approved GE-Hitachi Nuclear Energy Americas, LLC (GEH)/GNF BWR lattice physics code. The fuel storage criticality calculations were then performed using MCNP-05P, the GEH/GNF proprietary version of the Los Alamos National Laboratory Monte Carlo neutron transport code, MCNP5, using the TGBLA06 nuclide inventory as input. TGBLA06 uses ENDF/B-V cross-section data to perform coarse-mesh, broad-group, diffusion theory calculations. MCNP-05P uses ENDF/B-VII.0 pointwise (i.e., continuous) cross section data, and all reactions in the cross-section evaluation are considered. MCNP-05P has been validated and verified for spent fuel pool storage rack evaluations in accordance with the NUREG/CR-6698 guidance (included as part of Attachment 6). The method of analysis is discussed in greater detail in Section 3.0 of Attachment 6. Validation of the codes and libraries is described in Section 3.4 and Appendix A of Attachment 6.

The use of TGBLA06 for BWR core depletion calculations has been reviewed and accepted by the NRC as part of the approval of Reference 6.2. The use of TGBLA06 for GNF3 depletion calculations has been reviewed and approved by the NRC as part of the GESTAR II Amendment 49 approval (Reference 6.8). The NRC has also approved the MCNP-05P /TGBLA06 code package for use in similar fuel pool criticality analyses for other licensees. Reference 6.6 documents an example of one NRC approved use of this code package.

3.1.3 Accident Conditions

The spent fuel rack configuration was analyzed for credible accident scenarios. The scenarios considered are presented in the bulleted list that follows and are discussed in Section 5.5.3 of

Attachment 6. Note that the "no Boral on rack periphery" case is conservatively treated as a normal condition bias in Section 5.5.2. Note that the base cases in Section 5.5.2 and in Section 5.5.3 are not intended to be the same.

- SFP temperature exceeding the normal range (moderator temperature/density changes)
- Dropped and dropped + damaged fuel assemblies
- Rack movement (seismic)
- Mislocated fuel assembly (assemblies in the wrong location outside a storage rack)

The criticality analysis for the storage of BWR assemblies in the DNPS SFP racks with Boral panels has been performed. The results for the normal condition show that k_{eff} is ≤ 0.95 with the storage racks fully loaded with fuel of the highest anticipated reactivity, at a temperature corresponding to the highest reactivity. The results for all accident conditions also show that k_{eff} is ≤ 0.95 with the storage racks fully loaded with fuel of the highest anticipated reactivity, at a temperature corresponding to the highest reactivity.

Reactivity effects of abnormal and accident conditions have been evaluated and assure that under all credible abnormal and accident conditions, the reactivity will not exceed the regulatory limit of 0.95 with a 95 percent probability at a 95 percent confidence level.

3.2 New Fuel Vault Criticality Safety Analysis

The DNPS UFSAR Section 9.1.1, "New Fuel Storage," documents the applicable combined units' NFV safety design basis. New fuel is stored in a manner which precludes inadvertent criticality. The NFV racks are designed to maintain the stored spent fuel in a spatial geometry that precludes the possibility of criticality. The DNPS NFV racks are GE designed low density racks with a center-to-center spacing within a given row of 6.625 inches and an interrack spacing of 11.06 inches. The NFV at DNPS is a reinforced concrete Class I structure that ensures the spacing is maintained even in a seismic event.

The NFV rack CSA coverage for the new GNF3 fuel will be the GESTAR II (Reference 6.2) analysis for GE designed low density NFV racks, upon approval of this proposed license amendment. The applicability of GESTAR II to the GNF3 fuel type is documented in the GNF3 GESTAR II validation report (Reference 6.3). GNF3 and the NFV methodology was previously reviewed by the NRC as part of Amendment 37 to GESTAR and was incorporated first in GESTAR in Revision 24. Amendment 37 (Reference 6.10) RAI-3, which is included in the US Supplement to GESTAR II (Reference 6.2), Page US.B-181, asked for additional details regarding GESTAR k_{inf} calculations and methodology. The NRC staff reviewed the fresh and irradiated fuel storage criteria proposed and the methodology used in the calculations in Amendment 37 to GESTAR II and issued a safety evaluation (Reference 6.10) that determined that the criteria and methodology are acceptable.

GNF performed a CSA for GNF3 fuel stored in a NFV to ensure the applicability of GESTAR II to GNF3 fuel. The two models used in the CSA for the GNF3 NFV have rectangular dimensions corresponding to two generic NFV designs. The NFV criticality analysis modeled the actual rectangular dimensions and tolerances of both options to determine the restrictions outlined in

GESTAR II. The limiting model bounds the geometry of the DNPS NFV racks; therefore, the racks are covered under GESTAR II. The DNPS NFV interrack pitch is ≥ 10.5 inches (the criteria listed in GESTAR II) and thus the racks may be utilized to store new GNF3 fuel with in-core SCCG k_{inf} ≤ 1.31 (Reference 6.2, Section 3.5).

4.0 REGULATORY EVALUATION

4.1 Applicable Regulatory Requirements/Criteria

The regulations in 10 CFR 50.36, "Technical Specifications," contain the requirements for the contents of TS. As required by 10 CFR 50.36(c)(4), "Design features," the TS will include design features of the facility such as materials of construction and geometric arrangements, which, if altered or modified, would have a significant effect on safety and are not covered in categories described in 10 CFR 50.36(c)(1), (2), and (3). TS 4.0, "Design Features," provides the DNPS requirements for site location, the reactor core, and fuel storage, meeting the intent of 10 CFR 50.36(c)(4). The governing k_{inf} limit structure for acceptable SFP fuel storage in TS 4.3.1.1.c is replaced with a new condition that is consistent with new CSA basis.

10 CFR 50.68, "Criticality accident requirements," paragraph (b)(4) states that the k_{eff} of the spent fuel storage racks loaded with fuel of the maximum fuel assembly reactivity and flooded with unborated water must not exceed 0.95, at a 95 percent probability, 95 percent confidence level. Further, paragraphs (b)(2) and (b)(3) state the equivalent neutron multiplication factor limit for the NFV, including the impact that "optimum moderation" scenario might have. The requirements stated include that the k_{eff} of the fresh fuel in the fresh fuel storage racks loaded with fuel of the maximum fuel assembly reactivity and flooded with unborated water must not exceed 0.95, at a 95 percent probability, 95 percent confidence level. The regulation also states that for the optimum moderation case the k_{eff} must not exceed 0.98 at a 95 percent probability, 95 percent confidence level. The optimum moderation case is not applicable to the DNPS NFV as it is a moderation controlled area, as stated in DNPS UFSAR Section 9.1.1.3 (Reference 6.7). The moderation control area limits the amount of hydrogenous material on the Refuel Floor, which contains the NFV, at DNPS. Administrative controls, as generally defined in SIL 152 (Reference 6.9), have been incorporated in the DNPS fire protection plans and fuel handling procedures. DNPS utilizes these standard industry practices to comply with SIL 152 to preclude the optimum moderation condition. These practices have been found acceptable to forgo specifically analyzing the optimum moderation condition stipulated in 10 CFR 50.68(b)(3). The DNPS SFP criticality analysis, provided as Attachment 6 to this submittal and the DNPS NFV racks meeting the GESTAR II storage requirements summarized in Section 3.5 of Reference 6.2, demonstrate that these requirements are met.

10 CFR 50.68(b)(7) states that the maximum nominal U-235 enrichment of the fresh fuel assemblies is limited to 5.0 percent by weight. DNPS GNF3 fuel is below 5.0 percent by weight U-235 enrichment.

DNPS, Units 2 and 3, were not licensed to the 10 CFR 50, Appendix A, General Design Criteria (GDC). The DNPS, Units 2 and 3, UFSAR, Section 3.1, "Conformance with NRC General Design Criteria," provides an assessment against the 70 draft GDC published in 1967 and concluded that the plant specific requirements are sufficiently similar to the Appendix A GDC.

The design basis of Unit 2 was later evaluated against the Appendix A GDC in UFSAR Section 3.1.2. The high degree of similarity between Units 2 and 3 indicates that Unit 3 also conforms to the GDC. Criterion 66, "Prevention of fuel storage criticality," states that criticality in the new and spent fuel storage shall be prevented by physical systems or processes, preferably by use of geometrically safe configurations. The evaluation of DNPS's conformance with Criterion 66 is discussed in both Section 3.1.1.8.1, "Criterion 66 – Prevention of Fuel Storage Criticality" and Section 9.1, "Fuel Storage and Handling," of the DNPS UFSAR. The racks in which new and spent fuel assemblies are placed are designed and arranged to ensure subcriticality in the vault and storage pool. The DNPS criticality analysis demonstrates that, given the current spent fuel storage system design, k_{eff} will remain less than or equal to 0.95 for the legacy fuel types and the GNF3 fuel.

4.2 Precedent

The NRC recently approved the use of the GNF CSA methodology to determine the acceptability of storing fresh and spent GNF3 fuel at River Bend Station. Amendment No. 201 and the corresponding safety evaluation were issued on December 31, 2019 (Reference 6.6). The difference between the River Bend Station submittal and this submittal is the neutron absorbing material credited in the spent fuel pool. River Bend Station utilizes NETCO-SNAP-IN rack inserts, and DNPS credits Boral panels for reactivity control. However, the GNF methodology is independent of the neutron absorbing material in the spent fuel pool racks. This GNF methodology was shown to be appropriate for use at DNPS by validating that there exists a well-characterized, linear relationship between the infinite lattice k_{inf} (in-core) and fuel storage rack k_{inf} (in-rack). Appropriate application was also ensured by using a design basis lattice with conservative values of rack efficiency and in-core k_{inf} for all criticality analyses. Therefore, this methodology is applicable to DNPS.

4.3 No Significant Hazards Consideration

In accordance with 10 CFR 50.90, "Application for amendment of license, construction permit, or early site permit," Constellation Energy Generation, LLC (CEG) requests an amendment to Renewed Facility Operating License Nos. DPR-19 and DPR-25 for Dresden Nuclear Power Station (DNPS), Units 2 and 3, respectively. Specifically, CEG is adopting a new criticality safety analysis (CSA) methodology for performing the criticality safety evaluation for legacy fuel types in addition to the GNF3 reload fuel in the spent fuel pool (SFP). Use of the new SFP CSA methodology requires a change to the DNPS Technical Specifications (TS) 4.3.1, "Criticality." CEG is also proposing a change to the new fuel vault (NFV) CSA to utilize the GESTAR II methodology for validating the NFV criticality safety for GNF3 fuel in the General Electric (GE) designed NFV racks. This methodology change for the NFV does not require a change to the DNPS TS.

CEG has evaluated the proposed change against the criteria of 10 CFR 50.92(c) to determine if the proposed change results in any significant hazards. The following is the evaluation of each of the 10 CFR 50.92(c) criteria:

1. Does the proposed amendment involve a significant increase in the probability or consequences of an accident previously evaluated?

Response: No

The proposed amendment involves use of new methodologies for performing the new fuel vault (NFV) criticality safety analysis (CSA) and the spent fuel pool (SFP) CSA for the DNPS Units 2 and 3 spent fuel pools (SFPs). Technical Specification 4.3.1.1.c requires revision to maintain consistency with the new methodology results. The proposed new CSA demonstrates adequate margin to criticality and therefore does not affect the consequences of any accident previously evaluated.

The impact of the CSA methodology change was evaluated on the following four previously evaluated events and accidents: fuel handling accident (FHA), fuel mispositioning event, seismic event, and loss of SFP cooling event.

The proposed amendment, covering only the change in CSA methodologies, does not change or modify the fuel handling processes, new and spent fuel storage racks, number of fuel assemblies that may be stored in the NFV or SFP, the assumed decay heat generation rate, or the SFP cooling and cleanup system. There is therefore no impact on the probability of an accident previously evaluated.

Therefore, the proposed change does not involve a significant increase in the probability or consequences of an accident previously evaluated.

2. Does the proposed amendment create the possibility of a new or different kind of accident from any accident previously evaluated?

Response: No

Onsite storage of spent and fresh fuel assemblies in the DNPS Unit 2 SFP and Unit 3 SFP and onsite storage of fresh fuel assemblies in a shared NFV are normal activities for which DNPS has been designed and licensed. The proposed use of new methodologies for performing the DNPS NFV CSA and SFP CSA does not change or modify the fuel handling processes, new or spent fuel racks, number of fuel assemblies that may be stored in the new fuel vault or spent fuel pools, decay heat generation rate, or the SFP cooling and cleanup system.

The fuel handling accident (FHA), fuel mispositioning event, seismic event, and loss of SFP cooling event do not represent a new or different type of accident. The associated analysis results show that the storage racks remain sub-critical following a worst-case FHA, fuel mispositioning event, seismic event, and loss of SFP cooling event. Note that the missing rack Boral panel event was conservatively modeled as part of the evaluation of normal conditions instead of as a separate accident.
Therefore, the proposed change does not create the possibility of a new or different kind of accident from any previously evaluated.

3. Does the proposed amendment involve a significant reduction in a margin of safety?

Response: No

DNPS TS 4.3, "Fuel Storage," Specification 4.3.1.1.a requires the spent fuel storage racks to maintain the effective neutron multiplication factor, k_{eff}, less than or equal to 0.95 when fully flooded with unborated water, which includes an allowance for uncertainties. Therefore, for spent fuel pool criticality considerations, the required safety margin is 5 percent. 10 CFR 50.68(b)(2) also requires a k_{eff} of less than or equal to 0.95 in the NFV (the optimum moderation, 10 CFR 50.68(b)(3), case does not apply to DNPS due to countermeasures taken to prevent water fog entry into the NFV). Thus, the NFV also has a required safety margin of 5 percent.

The proposed change ensures, as verified by the associated NFV and SFP criticality analyses, that k_{eff} continues to be less than or equal to 0.95, thus preserving the required safety margin of 5 percent. In addition, using the in-core k_{inf} limit ensures that the SFP criticality analysis remains bounding for the fuel assemblies that are allowed to be stored in the SFP storage racks. The NFV and SFP criticality analyses provide adequate protection to ensure public health and safety in that it determines the reactivity limit for the fuel assemblies that are allowed to be stored in the NFV and SFP storage racks.

The proposed use of a new methodology for performing the DNPS SFP CSA does not affect spent fuel heat generation or the spent fuel cooling systems.

In addition, the radiological consequences of a dropped fuel assembly remain unchanged as the anticipated fuel damage due to a fuel handling accident is unaffected by using a new methodology to perform the CSA. The proposed change also does not increase the capacity of either the Unit 2 or Unit 3 spent fuel pools or the shared NFV beyond the current capacity.

Therefore, the proposed change does not involve a significant reduction in a margin of safety.

Based on the above, CEG concludes that the proposed amendment presents no significant hazards consideration under the standards set forth in 10 CFR 50.92(c), and, accordingly, a finding of "no significant hazards consideration" is justified.

4.4 Conclusions

In conclusion, based on the considerations discussed above, (1) there is reasonable assurance that the health and safety of the public will not be endangered by operation in the proposed manner, (2) such activities will be conducted in compliance with the Commission's regulations, and (3) the issuance of the amendment will not be inimical to the common defense and security or to the health and safety of the public.

5.0 ENVIRONMENTAL CONSIDERATION

The proposed amendment would change a requirement with respect to installation or use of a facility component located within the restricted area, as defined in 10 CFR 20, or would change an inspection or surveillance requirement. However, the proposed amendment does not involve (i) a significant hazards consideration, (ii) a significant change in the types or significant

increase in the amounts of any effluents that may be released offsite, or (iii) a significant increase in individual or cumulative occupational radiation exposure. Accordingly, the proposed amendment meets the eligibility criterion for categorical exclusion set forth in 10 CFR 51.22(c)(9). Therefore, pursuant to 10 CFR 51.22(b), no environmental impact statement or environmental assessment need be prepared in connection with the proposed amendment.

6.0 REFERENCES

6.1 NEDC-33938P, "Dresden Nuclear Power Station Fuel Storage Criticality Safety Analysis," Revision 0, dated April 2022 (Attachment 3 (non-proprietary) and Attachment 6 (proprietary version) of this submittal)

6.2 GE Licensing Topical Report NEDE-24011-P-A, "General Electric Standard Application for Reactor Fuel (GESTAR II, Main)," Revision 31, dated November 2020 (ADAMS Accession Number ML20330A197/ML20330A198 (proprietary version) and ML20330A199 (non-proprietary version))

6.3 Letter from B. Moore (Global Nuclear Fuel, Americas, LLC) to U. S. NRC, "Revised General Electric Standard Application for Reactor Fuel (GESTAR II) Compliance Reports for the GNF2 and GNF3 Fuel Product Lines," dated August 28, 2020 (ADAMS Accession Number ML20244A104)

6.4 NEI 12-16, "Guidance for Performing Criticality Analyses of Fuel Storage at Light-Water Reactor Power Plants," Revision 4, dated September 2019 (ADAMS Accession Number ML19269E069)

6.5 Letter from E. Brown (U. S. NRC) to B. Hanson (Exelon Generation Company, LLC), "Dresden Nuclear Power Station, Units 2 and 3 – Issuance of Amendments to Amend Renewed Facility Operating License Nos. DPR-19 and DPR-25 to Support Use of a New Nuclear Criticality Safety Analysis Methodology (CAC Nos. MF5734 and MF5735)," dated April 29, 2016 (ADAMS Accession Number ML15343A126)

6.6 Letter from M. O'Banion (U. S. NRC) to Entergy Operations, Inc., "River Bend Station, Unit 1 - Issuance of Amendment No. 201 RE: Change to the Neutron Absorbing Material Credited in Spent Fuel Pool for Criticality Control (EPID L-2018-LLA-0298)," dated December 31, 2019 (ADAMS Accession Number ML19357A009)

6.7 Dresden Units 2 and 3 – Updated Final Safety Analysis Report (UFSAR), Revision 14, dated June 2021

6.8 Letter from D. Morey (U. S. NRC) to M. P. Catts (GE-Hitachi Nuclear Energy Americas, LLC), "Final Safety Evaluation for NEDC-33173P Supplement 5 – Applicability of GE Methods to Expanded Operating Domains – Supplement for GNF3 Fuel (EPID: L-2017-TOP-0033)," dated March 21, 2019 (ADAMS Accession Number ML19064A229 (proprietary version) and ML19074A054 (non-proprietary version))

6.9 GE SIL No. 152, "Criticality Margins for Storage of New Fuel," dated March 31, 1976 (Attachment A of ML20198C524)

6.10 Letter from K. Hsueh (U.S. NRC) to J. G. Head (GE-Hitachi Nuclear Energy Americas, LLC), "Final Safety Evaluation for Amendment 37 to Global Nuclear Fuel – Americas Topical Report NEDE-24011-P-A-US General Electric Standard Application for Reactor Fuel and the US Supplement (CAC NO. MF0743)," dated March 2017. (ADAMS Accession Number ML17066A291/ML17069A311)

ATTACHMENT 2

Markup of Proposed Technical Specification Pages

Dresden Nuclear Power Station, Units 2 and 3
Renewed Facility Operating License Nos. DPR-19 and DPR-25

REVISED TECHNICAL SPECIFICATIONS PAGES

4.0-2

4.0 DESIGN FEATURES (continued)

4.3 Fuel Storage

4.3.1 Criticality

4.3.1.1 The spent fuel storage racks are designed and shall be maintained with:

a. $k_{eff} \leq 0.95$ if fully flooded with unborated water, which includes an allowance for uncertainties as described in Section 9.1.2 of the UFSAR; and

b. A nominal 6.30 inch center to center distance between fuel assemblies placed in the storage racks.

c. ~~The combination of U-235 enrichment and gadolinia loading shall be limited to ensure fuel assemblies have a maximum k-infinity of 0.8895 as determined at 39.2°F in the normal spent fuel pool in-rack configuration.~~

Fuel assemblies having a maximum k_{inf} of 1.33 in the normal reactor core configuration at cold conditions.

4.3.2 Drainage

The spent fuel storage pool is designed and shall be maintained to prevent inadvertent draining of the pool below elevation 589 ft 2.5 inches.

4.3.3 Capacity

The spent fuel storage pool is designed and shall be maintained with a storage capacity limited to no more than 3537 fuel assemblies.

ATTACHMENT 3

NEDO-33938, "Dresden Nuclear Power Station Fuel Storage Criticality Safety Analysis," Revision 0, dated April 2022

(Non-Proprietary Version)

Global Nuclear Fuel

NEDO-33938

Revision 0

April 2022

Non - Proprietary Information

Dresden Nuclear Power Station
Fuel Storage Criticality Safety Analysis

Copyright 2022 Global Nuclear Fuel, All Rights Reserved

INFORMATION NOTICE

This is a non-proprietary version of the document NEDC-33938P, Revision 0, which has the proprietary information removed. Portions of the document that have been removed are indicated by an open and closed bracket as shown here [[ ]].

IMPORTANT NOTICE REGARDING CONTENTS OF THIS REPORT

Please Read Carefully

The design, engineering, and other information contained in this document are furnished for the purpose of supporting Dresden Nuclear Power Station evaluation of spent fuel pool criticality. The use of this information by anyone other than Dresden Nuclear Power Station, or for any purpose other than that for which it is furnished by GNF is not authorized; and with respect to any unauthorized use, GNF makes no representation or warranty, express or implied, and assumes no liability as to the completeness, accuracy, or usefulness of the information contained in this document, or that its use may not infringe privately owned rights.

Revision Summary

Revision	Date	Summary
0	April 2022	Initial issue

TABLE OF CONTENTS

1.0 INTRODUCTION 1
2.0 REQUIREMENTS 1
3.0 METHOD OF ANALYSIS 1
3.1 Cross-Sections 2
3.2 Geometry Treatment 2
3.3 Convergence Checks 3
3.4 Validation and Computational Basis 3
3.5 In-Core k_∞ Methodology 6
3.6 Definitions 7
3.7 Assumptions and Conservatisms 8
4.0 FUEL DESIGN BASIS 9
4.1 GNF3 Fuel Description 9
4.2 Fuel Model Description 13
5.0 CRITICALITY ANALYSIS OF SPENT FUEL STORAGE RACKS 14
5.1 Description of Spent Fuel Storage Racks 14
5.2 Spent Fuel Storage Rack Models 17
5.3 Design Basis Lattice Selection 19
5.4 Normal Configuration Analysis 21
5.4.1 Analytical Models 21
5.4.2 Results 22
5.5 Bias Cases 22
5.5.1 Depletion Bias Cases 22
5.5.2 Normal Bias Cases 23
5.5.3 Abnormal/Accident Bias Cases 24
5.5.4 Results 26
5.6 Uncertainties 27
5.6.1 Analytical Models 27
5.6.2 Results 28
5.7 Maximum Reactivity 30
6.0 INTERFACES BETWEEN STORAGE POOLS 31
7.0 CONCLUSIONS 31
8.0 REFERENCES 32
APPENDIX A MCNP-05P CODE VALIDATION 33
A.1 Trend Analysis 38
A.2 Bias and Bias Uncertainty Calculation – Single Sided Tolerance Limit 42
APPENDIX B LEGACY FUEL STORAGE JUSTIFICATION 45
B.1 Legacy Non-GNF Fuel Justification 45
B.2 Legacy GNF Fuel Justification 46

LIST OF TABLES

Table 1 – Summary k_{max}(95/95) Result 1
Table 2 – Summary of the Critical Benchmark Experiments 4
Table 3 – Area of Applicability Covered by Code Validation 5
Table 4 – Lattice Dimensions 11
Table 5 – Cell Dimensions 11
Table 6 – Channel Dimensions 12
Table 7 – Fuel Stack Density as a Function of Gadolinia Concentration 13
Table 8 – Storage Rack Model Dimensions 19
Table 9 – GNF3 Fuel Parameter Ranges Studied in Spent Fuel Rack 20
Table 10 – In-Rack k_∞ Results – Normal Configurations 22
Table 11 – Rack Periphery Study Results 24
Table 12 – Results for Misplaced Bundles 25
Table 13 – Spent Fuel Storage Rack Bias Summary 27
Table 14 – Spent Fuel Storage Rack Uncertainty Δk Results 29
Table 15 – Spent Fuel Storage Rack Results Summary 30
Table 16 – MCNP-05P Results for the Benchmark Calculations 33
Table 17 – Trending Parameters 38
Table 18 – Trending Results Summary 41
Table 19 – Bias and Bias Uncertainty for MCNP-05P with ENDF/B-VII 43
Table 20 – Recommended Bias and Bias Uncertainty in Criticality Analyses for MCNP-05P with ENDF/B-VII 44
Table 21 – Summary Non-GNF Fuel k_∞ Compared to GNF3 Design Basis 45
Table 22 – Limiting Cold As-Designed Eigenvalue of all GNF Bundles 46

LIST OF FIGURES

Figure 1 – GNF3 Lattice Configuration 10
Figure 2 – Channel 1/8 Cross-Sections 12
Figure 3 – GNF3 MID Lattice in MCNP-05P 14
Figure 4 – Spent Fuel Storage Pool Arrangement 15
Figure 5 – Stainless Steel Tube with Boral Core 16
Figure 6 – High Density Spent Fuel Rack 17
Figure 7 – Storage Rack Model Schematic 18
Figure 8 – Zoomed Storage Rack Model Schematic 18
Figure 9 – Spent Fuel In-Rack versus In-Core Eigenvalues 21
Figure 10 – Finite Misplaced Bundle Model Example 25
Figure 11 – Scatterplot of knorm versus EALF 39
Figure 12 – Scatterplot of k_{norm} versus wt.% ^{235}U 39
Figure 13 – Scatterplot of k_{norm} versus wt.% ^{239}Pu 40
Figure 14 – Scatterplot of k_{norm} versus H/X 40
Figure 15 – Normality Test of k_{norm} Results 42

ACRONYMS

Term	Definition
2D	Two-Dimensional
AOA	Area of Applicability
BAS	Base Lattice
BOL	Beginning-of-Life
BWR	Boiling Water Reactor
CFR	Code of Federal Regulations
DNPS	Dresden Nuclear Power Station
EALF	Energy of the Average Lethargy Causing Fission
[[	]]
GEH	GE-Hitachi Nuclear Energy Americas LLC
GNF	Global Nuclear Fuel - Americas, LLC
HTC	Haut Taux de Combustion
H/X	Hydrogen-to-Fissile Ratio
MID	Mid Lattice
MOX	Mixed Uranium-Plutonium Oxide
NCA	Nuclear Critical Assembly
NEI	Nuclear Energy Institute
NRC	Nuclear Regulatory Commission
SCCG	Standard Cold Core Geometry
UO_2	Uranium Dioxide
VAN	Vanished Lattice

1.0 INTRODUCTION

This report describes the criticality analysis and results for the Dresden Nuclear Power Station (DNPS) Unit 2 and Unit 3 spent fuel racks. It includes sufficient detail on the methodology and analytical models utilized in the criticality analysis to verify that the storage rack systems have been accurately and conservatively represented. This report includes analysis of Boral spent fuel racks in DNPS spent fuel pools. This analysis covers the current GNF3 fuel product line and all legacy fuel stored in DNPS spent fuel pools.

The racks are analyzed using the MCNP-05P Monte Carlo neutron transport program and ENDF/B-VII.0 cross-section library. The methodology used in this analysis is the peak Standard Cold Core Geometry (SCCG) in-core eigenvalue (k_∞) criterion. A maximum SCCG, uncontrolled peak in-core k_∞ of 1.33 as defined by the lattice physics code TGBLA06 (Reference 1) is set as the limit for this analysis. As demonstrated in Table 1, the analysis resulted in a storage rack maximum k-effective (k_{max}(95/95)) less than 0.95 for normal and credible abnormal operation with tolerances and uncertainties taken into account.

Table 1 – Summary k_{max}(95/95) Result

Region	k_{max}(95/95)
Spent Fuel Pool	0.93410

2.0 REQUIREMENTS

Title 10 of the Code of Federal Regulations (CFR) Part 50 defines the requirements for the prevention of criticality in fuel storage and handling at nuclear power plants. 10 CFR 50.68 details specifically that the storage rack k_{max}(95/95) for spent fuel storage racks must be demonstrated to be $\leq$ 0.95 for normal and credible abnormal operation with tolerances and computational uncertainties taken into account. The Standard Review Plan (Reference 2) outlines the standards that must be met for these analyses. All necessary requirements are met in this analysis. Nuclear Energy Institute (NEI) 12-16 (Reference 3) is used as the guidance document for this analysis.

3.0 METHOD OF ANALYSIS

In this evaluation, in-core k_∞ values and exposure dependent, pin-by-pin isotopic specifications are generated using the GE-Hitachi Nuclear Energy Americas LLC (GEH)/GNF lattice physics production code TGBLA06. TGBLA06 solves Two-Dimensional (2D) diffusion equations with diffusion parameters corrected by transport theory to provide system multiplication factors and perform burnup calculations.

The fuel storage criticality calculations are then performed using MCNP-05P, the GEH/GNF proprietary version of MCNP5 (Reference 4). MCNP-05P is a Monte Carlo program for solving the linear neutron transport equation for a fixed source or an eigenvalue problem. The code implements the Monte Carlo process for neutron, photon, electron, or coupled transport involving all these particles, and computes the eigenvalue for neutron-multiplying systems. For the present application, only neutron transport was considered.

3.1 Cross-Sections

TGBLA06 uses ENDF/B-V cross-section data to perform coarse-mesh, broad-group, diffusion theory calculations. It includes thermal neutron scattering with hydrogen using an S(α,β) light water thermal scattering kernel.

MCNP-05P uses pointwise (i.e., continuous) cross-section data, and all reactions in a given cross-section evaluation (e.g., ENDF/B-VII.0) are considered. For the present work, thermal neutron scattering with hydrogen was described using S(α,β) light water thermal scattering kernel. The cross-section tables include all details of the ENDF representations for neutron data. The code requires that all the cross-sections be given on a single union energy grid suitable for linear interpolation; however, the cross-section energy grid varies from isotope to isotope. The libraries include very little data thinning and utilize resonance integral reconstruction error tolerances of 0.001%.

3.2 Geometry Treatment

TGBLA06 is a 2D lattice design computer program for Boiling Water Reactor (BWR) fuel bundle analysis. It assumes that a lattice is uniform and infinite along the axial direction and that the lattice geometry and material are reflecting with respect to the lattice boundary along the transverse directions.

MCNP-05P implements a robust geometry representation that can correctly model complex components in three dimensions. An arbitrary three-dimensional configuration is treated as geometric cells bounded by first and second-degree surfaces and some special fourth-degree elliptical tori. The cells are described in a cartesian coordinate system and are defined by the intersections, unions and complements of the regions bounded by the surfaces. Surfaces are defined by supplying coefficients to the analytic surface equations or, for certain types of surfaces, known points on the surfaces. Rather than combining several pre-defined geometrical bodies in a combinatorial geometry scheme, MCNP-05P has the flexibility of defining geometrical shapes from all the first and second-degree surfaces of analytical geometry and elliptical tori and then combining them with Boolean operators. The code performs extensive checking for geometry errors and provides a plotting feature for examining the geometry and material assignments.

3.3 Convergence Checks

The use of TGBLA06 as a depletion code in this criticality analysis is consistent with its use for BWR fuel design and its associated user's manual. Convergence checks are encoded in the standard error routines and the absence of error messages was confirmed in all code output.

In this analysis, the following criticality code parameters were specified. At a minimum, all MCNP-05P cases were run with 20,000 neutrons per generation, 200 cycles skipped, and 500 total cycles run. Some cases were run for more cycles skipped in order to meet all the convergence checks. For this analysis, the following MCNP-05P convergence checks were reviewed and confirmed passed for each case:

- Sampling of all cells that contain fissionable material
- Matching of first and second half eigenvalue
- Fission source entropy check

3.4 Validation and Computational Basis

MCNP-05P has been compared to [[ ]] critical experiments for validation purposes using ENDF/B-VII.0 nuclear cross-section data. The experiments cover a number of moderator-to-fuel ratios and poison materials that represent material and geometric properties similar to that of BWR fuel lattices both in and out of fuel racks. The critical experiments to which MCNP-05P has been compared are provided in Table 2. All are either low-enriched Uranium Dioxide (UO_2) or Mixed Uranium-Plutonium Oxide (MOX) pin lattice in water experiments. The area of applicability (AOA) considered covered by this validation is listed in Table 3, along with the parameters which characterize the spent fuel rack system for comparison. The critical experiment modeling results, along with the calculation of the associated bias and bias uncertainty terms at the 95/95 confidence level using NUREG-6698 (Reference 5) guidance are provided in Appendix A. The study concluded that the appropriate bias to apply to systems covered by this AOA is [[ ]], and the appropriate uncertainty of that bias is [[ ]].

Table 2 – Summary of the Critical Benchmark Experiments

Experiment		Experiments	Year	Where
[[				
				]]

Table 3 – Area of Applicability Covered by Code Validation

Parameters	Validation Area of Applicability	Spent Fuel Rack Characteristics
Fissionable Material	Uranium, Plutonium	Uranium, Actinides
Chemical Form	UO_2, MOX	UO_2, MOX
Enrichment (wt.% ^{235}U)	wt.% $^{235}U \leq 4.9$	wt.% $^{235}U \leq 4.9$
Enrichment (wt.% ^{239}Pu)	wt.% $^{239}Pu \leq 5.3$	wt.% $^{239}Pu \leq 4.9$
Physical Form	Solid Compound	Solid Compound
Temperature	~20°C up to ~100°C	4-126°C
Moderator (in fuel region)	H_2O	H_2O
Physical Form	Solution	Solution
Temperature	~20°C up to ~100°C	4-126°C
Reflector (in fuel region)	H_2O	H_2O
Physical Form	Solution	Solution
Temperature	20°C	4-126°C
Absorbers	None/Boron/Gadolinium Stainless Steel/Copper	Boron/Gadolinium/ Fission Products
Neutron Energy Spectrum	Thermal	Thermal
Energy of Average Lethargy Causing Fission (MeV)	6.8E-8 – 8.6 E-7	6.6E-7 (Limiting In-rack k_∞ Case)

Table 3 demonstrates that the AOA of this validation encompasses the majority of storage characteristics of new fuel in the spent fuel storage racks. [[

]]

For the storage of spent fuel, however, it is appropriate to add additional uncertainty terms to the k_{max}(95/95) result. Specifically, these items are:

- Uncertainty in fuel depletion calculations

  Consistent with NEI 12-16, a conservative approximation of the fuel depletion uncertainty was quantified by assessing the reactivity difference between a Beginning-of-Life (BOL) system and the exposure dependent, peak reactivity system of interest. Specifically, the cold, in-core, BOL reactivity of the spent fuel rack design basis bundle with no gadolinium present was compared to the reactivity of the exposed design basis bundle at its cold, in-core, peak reactivity statepoint. Both reactivities are calculated for comparison in the rack system. Five percent of the difference in reactivities between these two cases is included as an uncertainty to the spent fuel rack study in Table 14 to cover the depletion isotopic benchmarking gap including gap for minor actinides and fission products.

- TGBLA06 eigenvalue uncertainty

  An additional uncertainty is also added to the fuel rack study related to eigenvalue calculations performed using TGBLA06. A bias of [[ ]]and a 95/95 bias uncertainty of [[

  ]] This uncertainty is applied to the spent fuel rack's k_{max}(95/95) value to cover uncertainty in the assignment of in-core k_∞ values to fuel lattices.

3.5 In-Core k_∞ Methodology

The design of the fuel storage racks provides for a subcritical multiplication factor for both normal and credible abnormal storage conditions. In all cases, the storage rack eigenvalue must be ≤ 0.95. To demonstrate compliance with this limit, the in-core k_∞ method is utilized.

The peak in-core k_∞ criterion method relies on a well-characterized relationship between infinite lattice k_∞ (in-core) for a given fuel design and a specific fuel storage rack k_∞ (in-rack) containing that fuel. The use of an infinite lattice k_∞ criterion for demonstrating compliance to fuel storage criticality criteria has been used for all General Electric-supplied storage racks and is currently used for re-rack designs at several plants. This report demonstrates that the methodology is also appropriate for use at the DNPS by presenting the following:

- A well-characterized, linear relationship between infinite lattice k_∞ (in-core) and fuel storage rack k_∞ (in-rack)
- The use of a design basis lattice with a conservative rack efficiency and in-core k_∞ for all criticality analyses

The analysis performed to calculate the lattice k_∞ to confirm compliance with the above criterion uses the Nuclear Regulatory Commission (NRC)-approved lattice physics methods encoded into the TGBLA06 engineering computer program. One of the outputs of the TGBLA06 solution is the lattice k_∞ of a specific nuclear design for a given set of input state parameters (e.g., void fraction, control state, fuel temperature).

Compliance of fuel with specified k_∞ limits will be confirmed for each new lattice as part of the bundle design process. Documentation that this has been met will be contained in the fuel design information report, which defines the maximum lattice k_∞ for each assembly nuclear design. The process for validating that specific assembly designs are acceptable for storage in the DNPS fuel storage racks is provided below.

1. Identify the unique lattices in each assembly design.
2. Deplete the lattices in TGBLA06 using the following conditions:
   a. Assembly aligned according to DNPS-specific lattice spacing and zero leakage
   b. [[
   c.

d.

e.

i.

ii.

f.

g.

3.

a.

b.

c.

d.

e.

f.]]

4. Ensure that the k_∞ values obtained from Step 3 for each lattice are less than or equal to the k_∞ limit of 1.33.

3.6 Definitions

Fuel Assembly – is a complete fuel unit consisting of a basic fuel rod structure that may include large central water rods. Several shorter rods may be included in the assembly. These are called "part-length rods". A fuel assembly includes the fuel channel.

Gadolinia – The compound Gd_2O_3. The gadolinium content in integral burnable absorber fuel rods is usually expressed in weight percentage gadolinia.

Lattice – An axial zone of a fuel assembly within which the nuclear characteristics of the individual rods are unchanged.

Base Lattice (BAS)– An axial zone of a fuel assembly located in the bottom half of the bundle within which all possible fuel rod locations for a given fuel design are occupied.

Mid Lattice (MID) [[

]]

Vanished Lattice (VAN) – An axial zone of a fuel assembly typically in the upper half of the bundle within which a number of possible fuel rod locations are unoccupied.

Rack Efficiency – The ratio of a particular lattice statepoint in-rack eigenvalue (k_∞) to its associated lattice nominal in-core eigenvalue (k_∞). This value allows for a straightforward comparison of a rack's criticality response to varying lattice designs within a particular fuel product line. A lower rack efficiency implies increased reactivity suppression capability relative to an alternate design with a higher rack efficiency.

Design Basis Lattice – The lattice geometry, exposure history, and corresponding fuel isotopics for a fuel product line that result in the highest rack efficiency in a sensitivity study of reasonable fuel parameters at the desired in-core reactivity. This lattice is used for all normal, abnormal, and tolerance evaluations in the fuel rack analysis.

3.7 Assumptions and Conservatisms

The fuel storage rack criticality calculations are performed with the following assumptions to ensure the true system reactivity is always less than the calculated reactivity:

1. [[

   ]]
2. [[

   ]]
3. Design basis lattices with in-core k_∞ values greater than the proposed 1.33 in-core k_∞ limit are used for all criticality analyses.
4. [[

   ]]

   Sensitivity studies of the storage system reactivity to these depletion parameters are presented in Section 5.5. [[

   ]]
5. For conservatism, only positive reactivity differences from nominal conditions determined from depletion sensitivity and abnormal configuration analyses are added as biases to the final storage rack k_{max}(95/95).

6. Neutron absorption in spacer grids, concrete, activated corrosion and wear products (CRUD), and axial blankets is ignored to limit parasitic losses in non-fuel materials.
7. TGBLA06 defined "lumped fission products" and Xe-135 are both conservatively ignored for MCNP-05P in-rack k_∞ calculations.
8. [[

]]

9. Only ^{10}B is modeled in the rack poison panel. Each panel is assumed to contain the minimum areal density, 0.020 $g^{10}B/cm^2$. All other material is ignored. Ignoring the other materials conservatively limits neutron absorption in the panel.

4.0 FUEL DESIGN BASIS

This rack criticality analysis covers the GNF3 fuel product line and all legacy fuel stored at DNPS. Justification for the storage of all legacy fuel at DNPS is provided in Appendix B. The description of GNF3 fuel is in Section 4.1. The GNF3 fuel bundle is used to determine the design basis bundle in Section 5.3.

All fuel is UO_2 with some fuel rods containing gadolinia, Gd_2O_3.

This criticality analysis covers reconstituted fuel where a rod containing fuel is replaced with another fueled or non-fueled rod. Fuel where there are missing fuel rod locations that are not part of the normal fuel product line designs is the non-standard fissile configurations assessed in Section 5.5.3.

This criticality analysis also covers the storage of non-fuel items such as channels in spent fuel rack locations because this analysis covers peak reactivity fuel in every rack cell location.

4.1 GNF3 Fuel Description

The GNF3 fuel lattice configuration is a 10x10 fuel rod array [[

]], as shown in Figure 1 with corresponding dimensions in Table 4 and Table 5. Figure 1 also demonstrates the part-length rod locations. Fuel channel dimensions are provided in Figure 2 and Table 6. Pellet stack density is in Table 7. [[

]]

[[

]]

Figure 1 – GNF3 Lattice Configuration

Table 4 – Lattice Dimensions

Item			Dimension	
			mm	in
Channel	[[			
Fuel Rod				
Pellet				
[[ ]]				
Bundle Lattice				]]

Table 5 – Cell Dimensions

Lattice Type	Channel Name	½ Wide Gap, Q		½ Narrow Gap, R		Control Blade Pitch, S	
		mm	in	mm	in	mm	in
[[							]]

[[

]]

Figure 2 – Channel 1/8 Cross-Sections

Table 6 – Channel Dimensions

Channel Name		83AV			
Channel Section		Zone 1		Zone 2	
Dimension		mm	in	mm	in
[[					
					]]

Table 7 – Fuel Stack Density as a Function of Gadolinia Concentration

Gadolinia Concentration (wt. fraction)	[[							
Pellet Density (g/cc)								]]

4.2 Fuel Model Description

The fuel models considered include 2D geometric modeling of all fuel material, cladding, water rods, and channels. In the depletion model, appropriate depletion time steps are used consistent with depletion timesteps used in BWR core design analyses. [[

]] Pin specific isotopic modeling as a function of exposure is performed based on the lattice physics code TGBLA06. To obtain the isotopic composition of the fuel pins, each lattice design considered is "burned" at reactor operating [[

]] and depleted through to a final exposure of [[

]] The isotopics utilized exclude Xe-135 and TGBLA06 defined "lumped fission products" [[

]] An example of a GNF3 MID lattice model in MCNP-05P is depicted in Figure 3.

[[

]]

Figure 3 – GNF3 MID Lattice in MCNP-05P

The fuel loadings considered for each lattice span a range of exposures, average enrichments, number of gadolinia rods, gadolinia concentrations, and void histories considered to be reasonably representative of any DNPS fuel design. The lattice type and exposure history that results in the worst-case rack efficiency for an in-core k_∞ greater than the proposed limit is then used to define the design basis lattice. This lattice is assumed to be stored in every location in the rack being analyzed. Details on the determination of the design basis lattice using the process outlined above are presented in Section 5.3.

5.0 CRITICALITY ANALYSIS OF SPENT FUEL STORAGE RACKS

5.1 Description of Spent Fuel Storage Racks

Each spent fuel pool contains 33 high-density spent fuel storage racks which provide storage for 3537 fuel assemblies. There are 18 racks arranged in a 9x11 array and 15 racks arranged in a 9x13 array. See Figure 4 for the relative location of the racks in each spent fuel pool. The racks are constructed to form tubes of adequate size for fuel storage. The tubes are welded together along their length with angles or clips to provide the inter-tube connection. The center-to-center distance between assemblies stored in tubes is 6.30 in. x 6.30 in.

The fuel storage tube is constructed of stainless-steel-bearing Boral neutron absorbing material. Boral is a sandwich-type plate (see Figure 5) that has outer surfaces of Type 1100 aluminum and a core of boron carbide (B_4C) uniformly dispersed in a matrix of Type 1100 aluminum. These plates are enclosed by inner and outer tubes made of Type 304 stainless steel designed to permit spent fuel pool water to enter and exit the Boral area. The inner and outer tubes maintain the Boral plate

structural integrity during vibratory events. The plates are not required to carry load. The individual neutron absorbing tubes are connected in a checkerboard pattern forming the rack assembly.

The rack assembly is shown in Figure 6. Each rack consists of a base assembly with legs and with plates along the edges and across the midpoint. A fuel support plate fabricated from 3/16-inch plate is provided in each storage position to hold one fuel assembly. The support plate is elevated approximately 12.37 inches above the spent fuel pool floor and is welded to the lower end of the tube. Cooling water flows through holes and/or slots in the sides of the support plates into the storage tubes to cool the stored fuel. Along the side of the rack, a filler plate assembly is welded between the absorber tube assemblies to enclose the space between neutron absorbing tubes. The racks are designed to prevent application of excessive vertical forces from the fuel handling system.

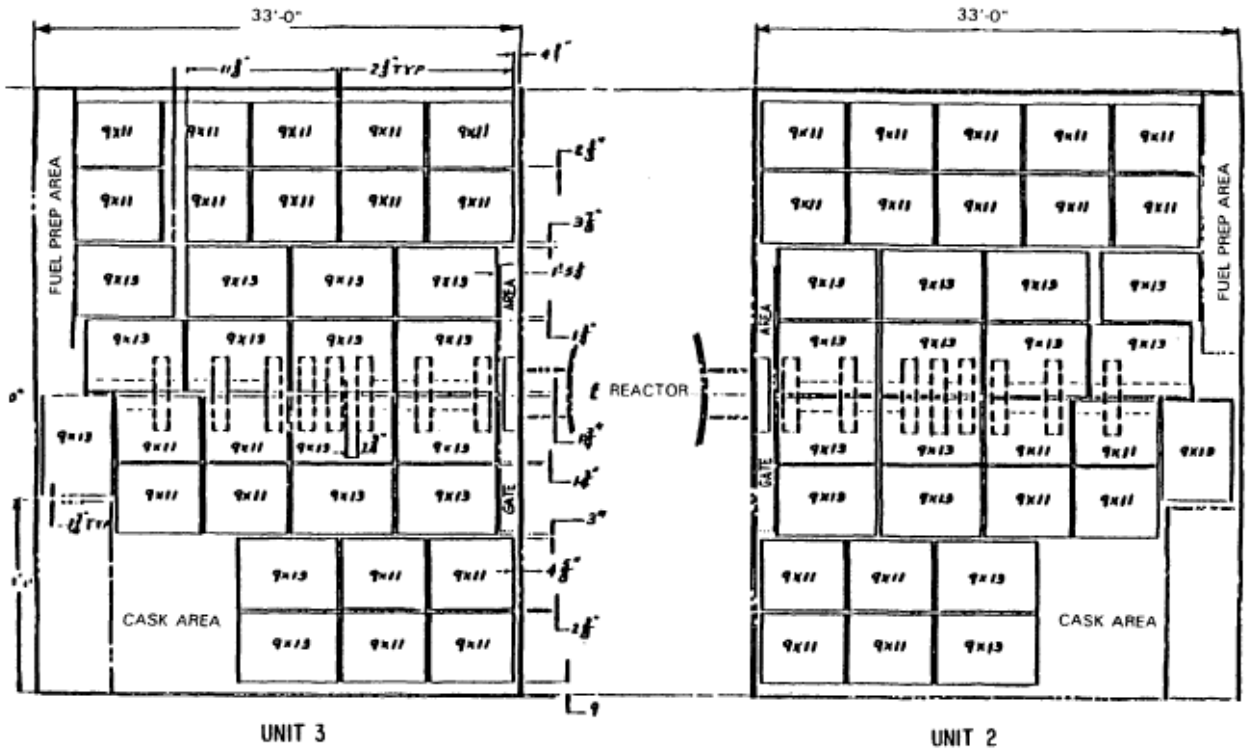

Figure 4 – Spent Fuel Storage Pool Arrangement

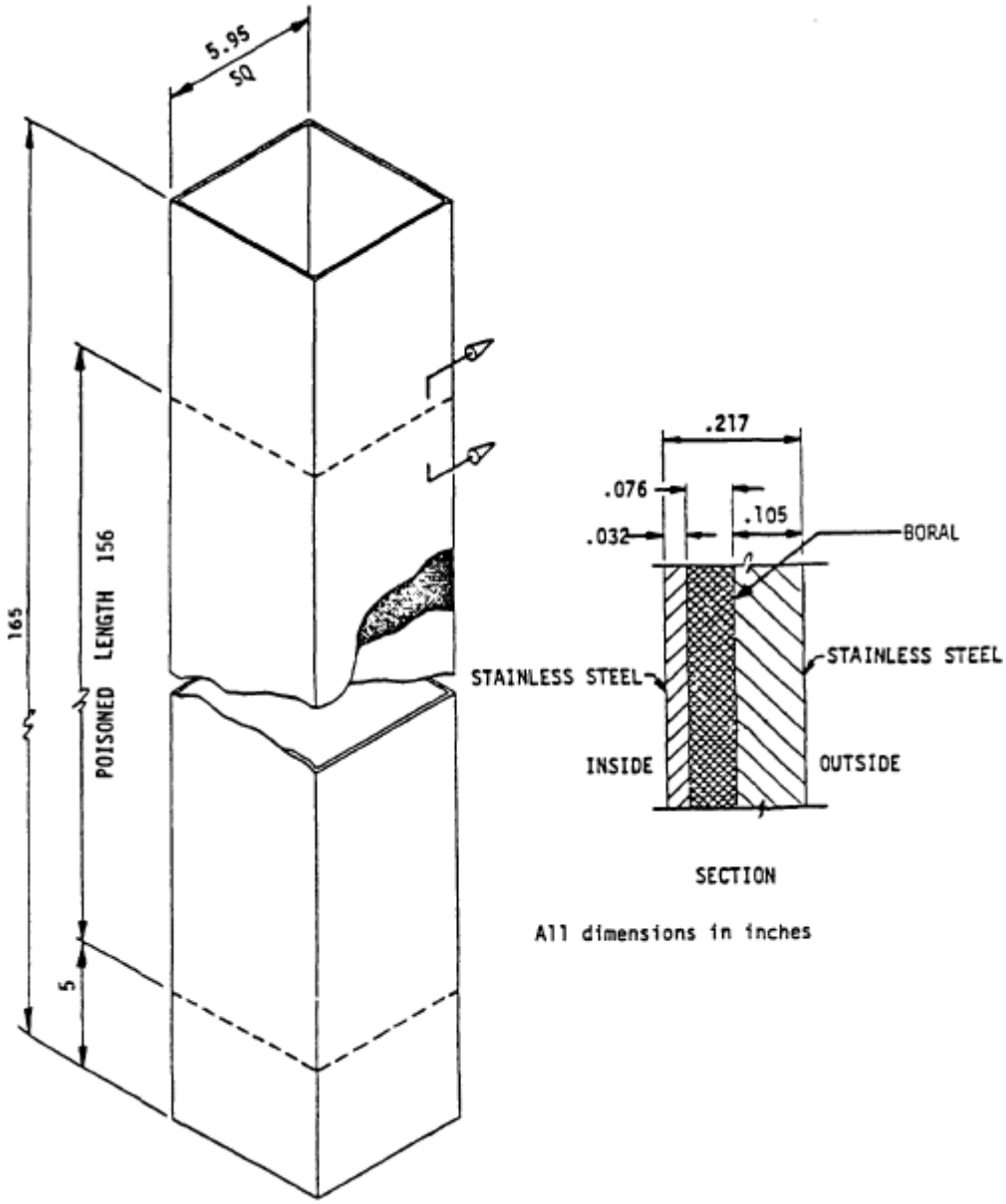

Figure 5 – Stainless Steel Tube with Boral Core

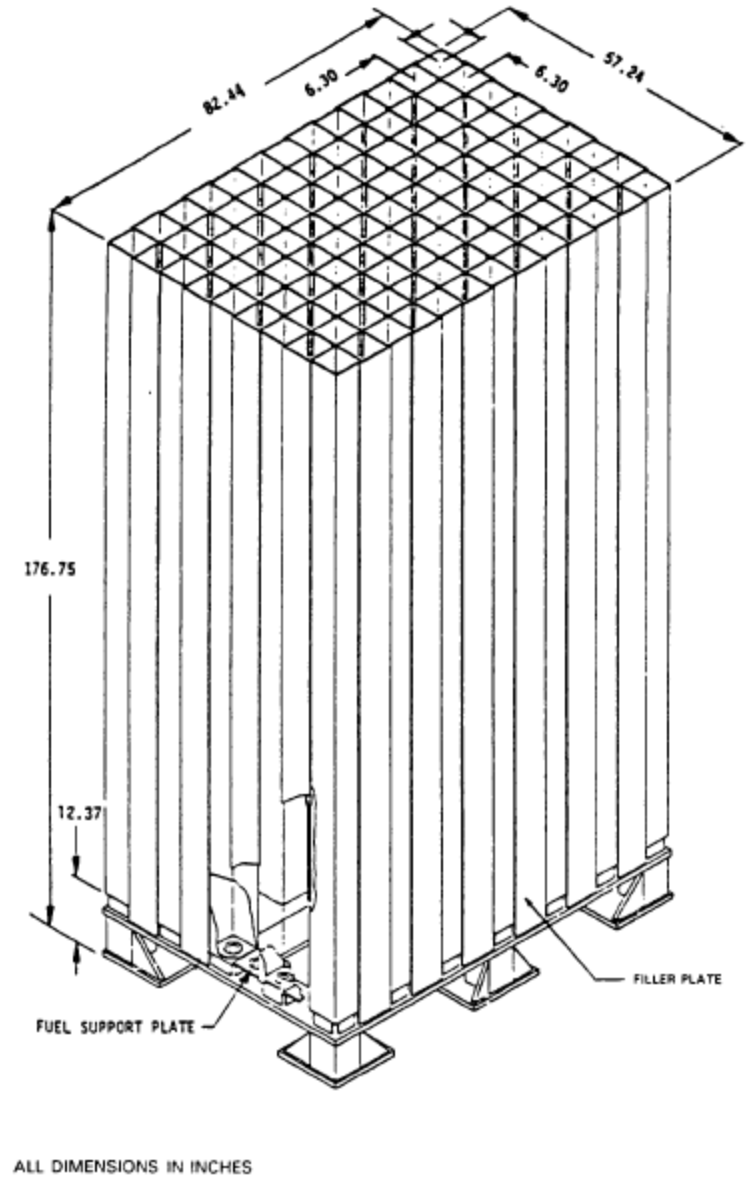

Figure 6 – High Density Spent Fuel Rack

5.2 Spent Fuel Storage Rack Models

This analysis covers a bounding storage configuration of maximum reactivity fuel in every storage location for DNPS rack design.

A 2D infinite 9x11 storage rack array with periodic boundary conditions is modeled to conservatively represent the nominal spent fuel pool configuration. Cells with Boral panels and cells without Boral panels alternate in a checkerboard pattern. The model is based on adjacent racks having edge cells without Boral panels lined-up together. Images of the model are provided in

Figures 7 and 8. Dimensions and tolerances are presented in Table 8. This array is used in the design basis bundle selection process in Section 5.3.

[[

]]

[[

]]

Figure 7 – Storage Rack Model Schematic

[[

]]

Figure 8 – Zoomed Storage Rack Model Schematic

Table 8 – Storage Rack Model Dimensions

	Nominal (inch)	Tolerance (inch)
Rack pitch	6.300	+0.060 / -0.060
Rack cell inner dimension	5.950	+0.125 / -0.125
Rack cell inner wall thickness	0.032	-
Rack cell outer wall thickness	0.105	-
Boral panel thickness*	0.073	+0.009 / -0.004
Boral panel width*	5.847	+0.060 / -0.060

* Analyzed with minimal value.

5.3 Design Basis Lattice Selection

Table 9 defines the lattice designs and exposure histories that were explicitly studied in the spent fuel storage rack to determine the geometric configuration and isotopic composition that results in the worst rack efficiency for DNPS. Note that void state is not a relevant parameter for zero exposure peak reactivity cases, and therefore, only a single result is presented for these fuel loadings. The highest rack efficiency with an in-core k_∞ greater than the proposed limit of 1.33 is found to result from the parameters defined in Case 1. The geometry and isotopics defined for this case are used to define all bundles in the remaining spent fuel rack analyses.

Figure 9 presents a graph that demonstrates the linear nature of the in-rack to in-core results over all rack efficiency cases studied in the rack system. The figure also provides infinite in-rack and in-core eigenvalue pairs at [[ ]] to allow for the linear relationship to be demonstrated over a large range of exposures.

Table 9 – GNF3 Fuel Parameter Ranges Studied in Spent Fuel Rack

Case	Lattice Type	Void (%)	Average Lattice Enrichment (wt.% ^{235}U)	Number of Gadolinia Rods	Gadolinia Concentration (Gd wt. %)	Peak-Reactivity Exposure (GWD/ST)	TGBLA06 Defined In-Core k_∞	MCNP-05P Defined In-Rack k_∞	Rack Efficiency
1	[[							0.91261	[[
2								0.90759	
3								0.89916	
4								0.90634	
5								0.89839	
6								0.89839	
7								0.90774	
8								0.90335	
9								0.89656	
10								0.88935	
11								0.88636	
12								0.88323	
13								0.87605	
14								0.87182	
15							]]	0.88098	]]

[[

]]

Figure 9 – Spent Fuel In-Rack versus In-Core Eigenvalues

5.4 Normal Configuration Analysis

5.4.1 Analytical Models

The most reactive normal configuration was determined by studying the reactivity effect of the following credible normal scenarios:

- Storage of non-channeled assemblies
- Eccentric loadings
  - When neutron absorber panels with an areal density above 0.01 g $^{10}B/cm^2$ are present on all four sides of the fuel assembly, a centrally located positioning of the fuel assembly in the storage cell is the most reactive configuration. Therefore, no eccentric loading cases were performed consistent with NEI 12-16.
- [[
  -
  -]]
- Pool moderator temperature variation

As the non-channeled assembly evaluation demonstrated a decrease in reactivity when compared to nominal, channeled storage conditions, the remaining normal configuration studies are performed with channeled bundles.

5.4.2 Results

The results of the study are provided in Table 10. This information demonstrates that none of the normal configurations analyzed increase the system reactivity by a statistically significant amount over the nominal loading pattern. The in-rack k_∞ associated with this nominal combination of conditions is 0.91261 and is hereafter referred to as k_{Normal}. This configuration will be used for all abnormal and tolerance studies that are performed on an infinite basis. Any small, positive reactivity differences from this nominal condition are included in the calculation of the system bias in Section 5.5.

Table 10 – In-Rack k_∞ Results – Normal Configurations

Case	Configuration	In-Rack k_∞	MCNP-05P Uncertainty (1σ)
Base	Nominal - centered, channeled, [[ ]]	0.91261	[[
k_{N1}	Non-channeled assemblies	0.91075	
k_{N3a}	[[	0.91292*	
k_{N3b}	]]	0.91252	
k_{N4a}	Moderator temperature increases to 126°C with 20% void (ρ=0.7508 g/cc)	0.86820	
k_{N4b}	Moderator temperature decreases to 4°C (ρ=1.0 g/cc)	0.91314*	]]

*Largest positive reactivity increase from nominal case for each term is included in roll-up of Δk_{Bias}

5.5 Bias Cases

5.5.1 Depletion Bias Cases

The following configurations related to the depletion conditions of the stored bundles were explicitly considered, where each description defines a condition, all bundles in storage experience over their entire exposure histories. These bound the conditions the bundles actually experience.

- [[
-
-
-

-
-
-

]]

The following potential reactivity effect of changes that occur during depletion are considered:

a. Fuel rod changes (clad creep, fuel densification/swelling)

   Clad Creep - [[

   ]]

   Fuel Pellet Densification – [[

   ]]

b. Material dependent grid growth

   [[

   ]]

5.5.2 Normal Bias Cases

The following bias cases are included for normal conditions. As noted in Table 10, (from Section 5.4.2) cases with positive reactivity increases from the nominal case are included in roll-up of Δk_{Bias} and are therefore included in Table 13.

- No Boral on rack periphery

  There may be assemblies on the sides that are not surrounded by neutron absorbing Boral panels. [[

  ]] Results are provided in Table 11. The reactivity increase from this study is included in the final Δk_{Bias} term.

Table 11 – Rack Periphery Study Results

Description	k_{eff}	MCNP-05P Uncertainty (1σ)	Δk
[[			]]
No Boral panels on rack periphery	[[		]]

5.5.3 Abnormal/Accident Bias Cases

Additionally, perturbations of the normal spent fuel rack configurations were considered for credible accident scenarios. The scenarios considered are presented in the bulleted lists, with the explanation provided. Results of these abnormal/accident conditions are included in the final Δk_{Bias} term in Table 13.

- Dropped/damaged fuel

  The dropped/damaged fuel scenario [[

  ]] The relative reactivity increase from this abnormal condition is included in Table 13.

- Abnormal positioning of fuel assembly outside the fuel storage rack

  Misplaced bundles outside the rack is analyzed on an edge of the rack. [[

  ]]. The calculation was then reperformed several times with misplaced bundles outside of the rack wall [[ ]] spanning the width of a rack cell. Further misplaced bundles positions were subsequently analyzed at various distances from the rack again moving the misplaced bundles laterally across the width of a rack cell [[ ]]. The most limiting result generated is used to determine the Δk from the base case eigenvalue as shown in Table 12. The [[ ]] is depicted in Figure 10. This analyzed scenario is limiting compared to, a fuel assembly mislocated in the water gap between the racks and the pool wall, a mislocated fuel assembly in the corner between two racks thus the mislocated fuel assembly adjacent to the fuel assemblies in racks from two sides, and a fuel assembly mislocated between the spent fuel pool racks and the fuel assembly in the fuel handling/inspection platform.

Table 12 – Results for Misplaced Bundles

Description	k_{eff}	MCNP-05P Uncertainty (1σ)	Δk
[[			]]
Misplaced bundles, in the most limiting location	[[		]]

[[

]]

Figure 10 – Finite Misplaced Bundle Model Example

The following abnormal configurations are also considered bounded, with the justification provided:

- Dropped bundle on rack

  For a drop on the rack, the fuel assembly may come to rest horizontally in the pool with a separation distance from the fuel of more than 12 inches. At this separation distance, the fissile material will be separated by enough neutron mean free paths to preclude neutron interactions that increase k_{eff}, and the overall effect on reactivity will be insignificant.

- Rack sliding due to seismic event which causes water gap between racks to close

  The racks modeled in this analysis are infinite in extent with no inter-module water gaps. This essentially assumes all racks are close-fitting and bounds possible reactivity effects of rack sliding.

- Loss of spent fuel pool cooling

  Normal sensitivity analysis results demonstrate that system reactivity decreases as moderator density decreases and pool temperature increases; therefore, reactivity effects of loss of spent fuel pool cooling are bounded by the nominal reactivity results.

- Storage of non-standard fissile configurations

  Non-standard fissile configurations of Optima2 fuel bundle DSB084 are stored along with standard fuel in the high density storage rack. Specifically, container SUB_B_TETBA001 contains DSB084 sub-bundle B stored in the Unit 3 spent fuel pool and original DSB084 fuel bundle contains sub-bundles A, C, and D stored in the Unit 3 spent fuel pool. Those scenarios are bounded by the limiting legacy non-GNF fuel which is addressed in Appendix B.

5.5.4 Results

The results of the bias studies are provided in Table 13. The Δk term in the table represents the difference between the system reactivity with the specified bias case and k_{Normal}. Δk_{B6} is the MCNP-05P bias from Section 3.4. The total contribution from these independent conditions to the k_{max}(95/95) of the spent fuel rack is calculated using Equation 1. In this equation, each Δk value must be both positive and the largest for its respective term to be considered.

$$\Delta k_{Bias} = \sum_{i=1}^{n} \Delta k_{Bi} \qquad (1)$$

Table 13 – Spent Fuel Storage Rack Bias Summary

Term	Description	In-Rack k_{eff}	MCNP-05P Uncertainty (1σ)	Δk*	Δk Uncertainty (2σ)+
Δk_{B1}	[[	0.91097	[[	-0.00164	[[
Δk_{B2a}		0.91261		0.00000	
Δk_{B2b}		0.91293		0.00032	
Δk_{B3a}		0.91372		0.00111	
Δk_{B3b}		0.91238		-0.00023	
Δk_{B4a}		0.91321		0.00060	
Δk_{B4b}	]]	0.91238		-0.00023	
Δk_{B5}	Depleted with clad creep	0.91346		0.00085	
Δk_{B6}	MCNP-05P bias	-		[[ ]]	
Δk_{B7}	Dropped/damaged fuel	0.91316		0.00055	
Δk_{B8}	Misplaced assembly side of pool	-		[[	
Δk_{B9}	No Boral panels on rack periphery	-		]]	
Δk_{N3a}^	[[ ]]	0.91292		0.00031	
Δk_{N4b}^	Moderator temperature decrease to 4°C	0.91314	]]	0.00053	]]
Δk_{Bias}				[[	]]

* For conservatism, only positive values that are the largest for their respective term are considered.
+ [[ ]]
^ From Table 10.

5.6 Uncertainties

5.6.1 Analytical Models

The following tolerance study configurations were explicitly considered for the spent fuel rack:

- Fuel enrichment increases by [[ ]] ^{235}U
- Fuel pellet density increased by [[ ]] of nominal value
- Gadolinia concentration decreased by [[ ]]
- Rod cladding thickness increased by [[ ]] and rod cladding outer diameter increase by [[ ]]

- Rod cladding thickness decreased by [[ ]] and rod cladding outer diameter decrease by [[ ]]
- Channel thickness increase by [[ ]]
- Channel thickness decrease by [[ ]]
- Fuel pellet outer diameter increase by [[ ]]
- Fuel pellet outer diameter decrease by [[ ]]
- Fuel rod pin pitch increase by [[ ]]
- Fuel rod pin pitch decrease by [[ ]]
- Rack wall thickness increase by 0.030 inches (inner wall), 0.043 inches (outer wall)
- Rack wall thickness decrease by 0.030 inches (inner wall), 0.060 inches (outer wall)
- Rack pitch increase by 0.060 inches
- Rack pitch decrease by 0.060 inches

The models developed for these studies were all based on the normal configuration presented in Section 5.4.

5.6.2 Results

The results of the tolerance studies and uncertainties are provided in Table 14. The values are summed using Equation 2 which is adopted from NEI 12-16 (Reference 3).

The Δk_{Ti} term in the table represents the difference between the system reactivity with the specified tolerance perturbation and k_{Normal}. In Equation 2, a Δk_{Ti} value must be both positive and the largest for its respective term to be considered.

The Δk_{Ui} terms in the table represent the uncertainty contributions to k_{max}(95/95) of the spent fuel rack and from the problem and code specific uncertainties which are combined with the tolerance contributions (Δk_{Ti}) using Equation 2.

$$\Delta k_{Uncertianty} = \sqrt{\sum_{i=1}^{n} \Delta k_{Ti}^2 + \sum_{i=1}^{n} \Delta k_{Ui}^2} \qquad (2)$$

Table 14 – Spent Fuel Storage Rack Uncertainty Δk Results

Term	Description	In-Rack k_{eff}	MCNP-05P Uncertainty (1σ)	Δk*	Δk Uncertainty (2σ)+
Δk_{T1}	Fuel enrichment increase	0.91626	[[	0.00365	[[
Δk_{T2}	Fuel pellet density increase	0.91308		0.00047	
Δk_{T3}	Gadolinia wt.% decrease	0.91720		0.00459	
Δk_{T4a}	Rod clad thickness/outer diameter increase	0.90620		-0.00641	
Δk_{T4b}	Rod clad thickness/outer diameter decrease	0.91882		0.00621	
Δk_{T5a}	Channel thickness increase	0.91203		-0.00058	
Δk_{T5b}	Channel thickness decrease	0.91217		-0.00044	
Δk_{T6a}	Pellet outer diameter increase	0.91321		0.00060	
Δk_{T6b}	Pellet outer diameter decrease	0.91223		-0.00038	
Δk_{T7a}	Fuel rod pin pitch increase	0.91434		0.00173	
Δk_{T7b}	Fuel rod pin pitch decrease	0.91169		-0.00092	
Δk_{T8a}	Rack wall thickness increase	0.91967		0.00706	
Δk_{T8b}	Rack wall thickness decrease	0.90567		-0.00694	
Δk_{T9a}	Rack pitch increase	0.90710		-0.00551	
Δk_{T9b}	Rack pitch decrease	0.91706	]]	0.00445	]]
Δk_{U1}	Critical benchmark bias uncertainty (95/95) (MCNP-05P versus critical experiments)	-	-	[[	-
Δk_{U2}	TGBLA06 eigenvalue uncertainty (95/95)	-	-		-
Δk_{U3}	Uncertainty on k_{Normal} (2 x 1σ value for base term in Table 10)	-	-		-
Δk_{U4}	Uncertainty of Δk bias contributors (2σ)	-	-		-
Δk_{U5}	Uncertainty of Δk tolerance contributors (2σ)	-	-		-
Δk_{U6}	Uncertainty in fuel depletion	-	-	]]	-
$\Delta k_{Uncertainty}$				[[ ]]	-

* For conservatism, only positive values that are the largest for their respective term are considered.
+ [[ ]]

5.7 Maximum Reactivity

The maximum reactivity of the spent fuel rack considering all biases, and uncertainties, is calculated using Equation 3. The final values are presented in Table 15.

$$k_{max(95/95)} = k_{Normal} + \Delta k_{Bias} + \Delta k_{Uncertainty} \qquad (3)$$

Table 15 – Spent Fuel Storage Rack Results Summary

Term	Value
k_{Normal}	0.91261
Δk_{Bias}	[[
$\Delta k_{Uncertainty}$	]]
$k_{max}(95/95)$	0.93410

[[

]]

6.0 INTERFACES BETWEEN STORAGE POOLS

The Unit 2 and Unit 3 storage pools are neutronically decoupled because the pools are not connected.

7.0 CONCLUSIONS

The DNPS spent fuel racks have been analyzed for the storage of GNF3 fuel using the MCNP-05P Monte Carlo neutron transport program and the k_∞ criterion methodology. A maximum SCCG, uncontrolled peak in-core eigenvalue (k_∞) of 1.33 as defined by TGBLA06 is specified as the rack design limit for GNF3 fuel in the spent fuel racks. The analyses resulted in a storage rack maximum k-effective (k_{max}(95/95)) less than the 10 CFR 50.68 limit of 0.95 for normal and credible abnormal operation with tolerances and computational uncertainties taken into account. Justification for the continued storage of all legacy DNPS fuel types is in Appendix B.

8.0 REFERENCES

1) MFN-035-99, S. Richards (NRC) to G. Watford (GE), Amendment 26 to GE Licensing Topical Report NEDE-24011-P-A, "GESTAR II" - Implementing Improved GE Steady State Methods (TAC No. MA6481), November 10, 1999.

2) NUREG-0800, "Standard Review Plan for the Review of Safety Analysis Reports for Nuclear Power Plants: LWR Edition," Section 9.1.1, "Criticality Safety of Fresh and Spent Fuel Storage and Handling," US NRC, Revision 3, March 2007. (NRC ADAMS Accession Number ML070570006).

3) NEI 12-16 "Guidance for Performing Criticality Analyses of Fuel Storage at Light-Water Reactor Power Plants," Revision 4, September 2019. (NRC ADAMS Accession Number ML19269E069).

4) LA-UR-03-1987, "MCNP – A General Monte Carlo N-Particle Transport Code, Version 5," April 2003.

5) NUREG/CR-6698, "Guide for Validation of Nuclear Criticality Safety Calculational Methodology," US NRC, January 2001. (NRC ADAMS Accession Number ML050250061).

6) J.R. Taylor, "An Introduction to Error Analysis," page 268-271, 2nd Edition, University Science Books, 1997.

APPENDIX A MCNP-05P CODE VALIDATION

Table 16 presents the results of the benchmark calculations described in Section 3.4. Note that it is necessary to make an adjustment to the calculated k_{eff} value if the critical experiment being modeled was not at a critical state. This adjustment is done by normalizing the k_{calc} values to the experimental values, which is valid for small differences in k_{eff}. This normalization is reported as k_{norm} and is determined using Equation A-1. The combined uncertainty (σ_t) from the measurement and the calculation is also determined using Equation A-2.

$$k_{norm} = k_{calc}/k_{exp} \qquad \text{(A-1)}$$

$$\sigma_t = \sqrt{\sigma_{calc}^2 + \sigma_{exp}^2} \qquad \text{(A-2)}$$

Table 16 - MCNP-05P Results for the Benchmark Calculations

#	Experiment	Expt. #	Benchmark Eigenvalue (k_{exp})	Experimental Uncertainty (σ_{exp})	MCNP-05P Result (k_{calc})	MCNP-05P Uncertainty (σ_{calc})	Norm. Result (k_{norm})	Combined Uncertainty (σ_t)
[[								

#	Experiment	Expt. #	Benchmark Eigenvalue (k_{exp})	Experimental Uncertainty (σ_{exp})	MCNP-05P Result (k_{calc})	MCNP-05P Uncertainty (σ_{calc})	Norm. Result (k_{norm})	Combined Uncertainty (σ_t)

#	Experiment	Expt. #	Benchmark Eigenvalue (k_{exp})	Experimental Uncertainty (σ_{exp})	MCNP-05P Result (k_{calc})	MCNP-05P Uncertainty (σ_{calc})	Norm. Result (k_{norm})	Combined Uncertainty (σ_t)

#	Experiment	Expt. #	Benchmark Eigenvalue (k_{exp})	Experimental Uncertainty (σ_{exp})	MCNP-05P Result (k_{calc})	MCNP-05P Uncertainty (σ_{calc})	Norm. Result (k_{norm})	Combined Uncertainty (σ_t)

#	Experiment	Expt. #	Benchmark Eigenvalue (k_{exp})	Experimental Uncertainty (σ_{exp})	MCNP-05P Result (k_{calc})	MCNP-05P Uncertainty (σ_{calc})	Norm. Result (k_{norm})	Combined Uncertainty (σ_t)

#	Experiment	Expt. #	Benchmark Eigenvalue (k_{exp})	Experimental Uncertainty (σ_{exp})	MCNP-05P Result (k_{calc})	MCNP-05P Uncertainty (σ_{calc})	Norm. Result (k_{norm})	Combined Uncertainty (σ_t)
								]]

A.1 Trend Analysis

To determine if any trend is evident in this pool of experiments, the parameters listed in Table 17 were considered as independent variables.

Table 17 – Trending Parameters

Energy of the Average Lethargy causing Fission (EALF)
Uranium Enrichment (wt.% ^{235}U)
Plutonium Content (wt.% ^{239}Pu)
Atom ratio of hydrogen to fissile material (H/X)

Each parameter was plotted against the k_{norm} results independently for each case that was analyzed. These plots are provided in Figure 11 through Figure 14. This scatter plot of data was first analyzed by visual inspection to determine if any trends were readily apparent in the data. During this inspection, the axes of the graphs were modified to different scales to allow for a more thorough review. No clear evidence of a trend, linear or otherwise, was observed from this inspection.

[[

]]

Figure 11 – Scatterplot of knorm versus EALF

[[

]]

Figure 12 – Scatterplot of k_{norm} versus wt.% ^{235}U

[[

]]

Figure 13 – Scatterplot of k_{norm} versus wt.% ^{239}Pu

[[

]]

Figure 14 – Scatterplot of k_{norm} versus H/X

To further check for trends in the data, a linear regression was performed. The linear regression fitted equation is in the form y(x)= a +bx, where y is the dependent variable (k_{norm}) and x is any of the predictor variables from Table 17. Unweighted k_{norm} values were used in this evaluation, although it is noted that, due to the very similar σ values reported in Table 16, using weighted values would produce very similar results. This regression was performed using the built-in regression analysis tool in Excel. The fitted lines are included in Figure 11 through Figure 14. Again, it is noted through visual inspection that the trends do not appear to exhibit a strong correlation to the data. A useful tool to validate this claim is the linear correlation coefficient. This is a quantitative measure of the degree to which a linear relation exists between two variables. It is often expressed as the square term, r^2, and can be calculated directly using built in functions in Excel. The closer r^2 gets to the value of 1, the better the fit of data is expected to be to the linear equation. Results from this linear regression evaluation are summarized in Table 18.

A final method to test for goodness of fit is the chi squared test (χ^2). This method is explained in detail in Reference 6. In general, it can be stated that χ^2 is an indicator of the agreement between the observed (calculated) and expected (fitted) values for some variable. For linear goodness of fit testing using this method, Equation A-3 is utilized, where the expected value of $f(x_i)$ corresponds to the linear fitted equation for the trending parameter, x_i.

$$\chi^2 = \sum_1^N \left(\frac{k_{calc^i} - f(x_i)}{\sigma_{calc^i}} \right)^2 \qquad \text{(A-3)}$$

A more convenient way to report this result is the reduced chi squared value, which is denoted as $\tilde{\chi}^2$ and is defined by Equation A-4, where d is the degrees of freedom for the evaluation.

$$\tilde{\chi}^2 = \chi^2 / d \qquad \text{(A-4)}$$

If a value of order one or less is obtained for this equation, then there is no reason to doubt the expected (fitted) distribution is reasonable; however, if the value is much larger than one, the expected distribution is unlikely to be a good fit. Results for each trending parameter are summarized in Table 18.

Table 18 – Trending Results Summary

Trend Parameter	Intercept	Slope	r^2	$\tilde{\chi}^2$	Valid Trend
EALF	[[				No
wt.% ^{235}U					No
wt.% ^{239}Pu					No
H/X				]]	No

The results in Table 18 clearly demonstrate that there are no statistically significant or valid trends of k_{norm} with any of the trending parameters.

A.2 Bias and Bias Uncertainty Calculation – Single Sided Tolerance Limit

As no trends are apparent in the critical experiment results, a weighted single-sided tolerance limit methodology is utilized to establish the bias and bias uncertainty for this AOA and code package combination. Use of this method requires the critical experiment results to have a normal statistical distribution. This was verified using the Anderson-Darling normality test. A graphical image of the results for this normality test, including the p-value for the distribution, is provided in Figure 15. Because the reported p-value is greater than 0.05, it is confirmed that the data fits a normal distribution, and the single sided tolerance limit methodology is confirmed to be applicable.

[[

]]

Figure 15 – Normality Test of k_{norm} Results

When using this method, the weighted bias and bias uncertainty are calculated using the following equations:

$$Bias = \bar{k}_{norm} - 1 \qquad \text{(A-5)}$$

$$Bias\ Uncertainty = U \bullet S_p \qquad \text{(A-6)}$$

$$\bar{k}_{norm} = \frac{\sum_{i=1}^{n} \frac{k_{norm_i}}{\sigma_t^2}}{\sum_{i=1}^{n} \frac{1}{\sigma_t^2}} \quad \text{(A-7)}$$

$$S_P = \sqrt{s^2 + \bar{\sigma}^2} \quad \text{(A-8)}$$

$$\bar{\sigma}^2 = \frac{n}{\sum_{i=1}^{n} \frac{1}{\sigma_t^2}} \quad \text{(A-9)}$$

$$s^2 = \frac{\left(\frac{1}{n-1}\right) \sum_{i=1}^{n} \frac{1}{\sigma_t^2} \left(k_{norm\,i} - \bar{k}_{norm}\right)^2}{\frac{1}{n} \sum_{i=1}^{n} \frac{1}{\sigma_t^2}} \quad \text{(A-10)}$$

Where:

$\bar{k}_{norm}$ = Average weighted k_{norm}

S_P = Pooled standard deviation

s^2 = Variance about the mean

$\bar{\sigma}^2$ = Average total variance

U = one-sided tolerance factor for n data points at (95/95 confidence/probability level)

n = number of data points [[ ]]

Table 19 summarizes the results of these calculations.

Table 19 - Bias and Bias Uncertainty for MCNP-05P with ENDF/B-VII

Bias (weighted)	[[
Bias Uncertainty (95/95 level)	
Variance About the Mean	
Average Total Variance	
Pooled Standard Deviation (1σ)	
One-Sided Tolerance Factor	]]

Using the average weighted bias and pooled standard deviation; the upper one-sided 95/95-tolerance limit (bias uncertainty) was calculated for use in criticality calculations, in accordance with NUREG-6698 guidance. As seen in Figure 15, [[

]] As shown in Table 19, the MCNP-05P bias uncertainty (95/95) [[

]] Table 20 summarizes the recommended bias and bias uncertainty to be used in criticality calculations.

Table 20 – Recommended Bias and Bias Uncertainty in Criticality Analyses for MCNP-05P with ENDF/B-VII

Bias	[[
Bias Uncertainty (95/95)	]]

APPENDIX B LEGACY FUEL STORAGE JUSTIFICATION

This appendix provides justification for the storage of legacy GNF and legacy non-GNF fuel designs stored in the DNPS Unit 2 and Unit 3 spent fuel pools.

B.1 Legacy Non-GNF Fuel Justification

The legacy non-GNF lattice previously determined to have the highest (most limiting) in-rack eigenvalue in the DNPS Unit 2 and Unit 3 spent fuel pools is modeled using the GNF codes and methods outlined in the main body of this report. The resulting peak nominal in-rack reactivity for the limiting non-GNF lattice is compared to the nominal in-rack reactivity for the GNF3 design basis lattice.

The non-GNF lattice previously determined by DNPS to have the highest nominal in-rack reactivity is lattice XMLCT-495L-10G30a which is an ATRIUM 10XM design.

Consistent with the main analysis, exposure dependent pin-by-pin isotopic specifications are generated for the XMLCT-495L-10G30a lattice using the GEH/GNF lattice physics production code TGBLA06. Also, consistent with the analysis in the main body of this report, the criticality calculation is performed using MCNP-05P at its cold, in-core, peak reactivity statepoint.

As shown in Table 21, the in-rack nominal reactivity of the legacy XMLCT-495L-10G30a lattice is bounded by the GNF3 design basis lattice determined in this analysis. Thus, the limiting legacy non-GNF lattice at DNPS is covered by the design basis lattice determined in Section 5.3.

Table 21 – Summary Non-GNF Fuel k_∞ Compared to GNF3 Design Basis

Lattice	In-Rack Nominal Reactivity
XMLCT-495L-10G30a Lattice	0.90710
GNF3 Design Basis Lattice	0.91261

The results of this study confirm that all legacy non-GNF fuel bundles are safe for storage in DNPS Unit 2 and Unit 3 spent fuel pools.

B.2 Legacy GNF Fuel Justification

Exposure dependent, maximum, uncontrolled in-core k_∞ results for each GNF fuel assembly in the DNPS spent fuel pools are confirmed to be less than 1.33. The in-core k_∞ values have been calculated using the process for validating that specific assembly designs are acceptable for storage in the DNPS fuel storage racks, as outlined in Section 3.5. The legacy GNF lattice with the highest in-core reactivity value is presented in Table 22. This information demonstrates that all legacy GNF fuel assemblies currently in the DNPS spent fuel pools have considerable margin to the reactivity of the GNF3 design basis bundle used in this analysis.

Because the GNF3 design basis bundle with an in-core k_∞ value of 1.33 was shown to be below the 10 CFR 50.68 0.95 in-rack k-effective limit when analyzed in the storage racks, and because the legacy GNF fuel types are sufficiently less reactive than this design basis bundle, it is confirmed that all legacy GNF fuel bundles are safe for storage in the DNPS spent fuel pools.

Table 22 – Limiting Cold As-Designed Eigenvalue of all GNF Bundles

Bundle	Bundle Name	In-Core k_∞
[[		]]

ATTACHMENT 4

NEI 12-16 Appendix C,
Criticality Analysis Checklist

APPENDIX C: CRITICALITY ANALYSIS CHECKLIST

The criticality analysis checklist is completed by the applicant prior to submittal to the NRC. It provides a useful guide to the applicant to ensure that all the applicable subject areas are addressed in the application, or to provide justification/identification of alternative approaches.

The checklist also assists the NRC reviewer in identifying areas of the analysis that conform or do not conform to the guidance in NEI 12-16. Subsequently, the NRC review can then be more efficiently focused on those areas that deviate from NEI 12-16 and the justification for those deviations.

Subject	Included	Notes / Explanation
1.0 Introduction and Overview		
Purpose of submittal	YES	Section 1.0 of NEDC-33938P and Section 1.0 of LAR RS-22-064.
Changes requested	YES	Section 1.0 of NEDC-33938P and Sections 2.1, 2.2, and 2.3 of LAR RS-22-064.
Summary of physical changes	YES	Section 1.0 of NEDC-33938P and Sections 2.1, 2.2, and 2.3 of LAR RS-22-064.
Summary of Tech Spec changes	YES	Section 2.3 of LAR RS-22-064. Attachment 2 and Attachment 3 of LAR RS-22-064.
Summary of analytical scope	YES	Sections 1.0 and 3.0 of NEDC-33938P and Sections 2.1 and 2.2 of LAR RS-22-064.
2.0 Acceptance Criteria and Regulatory Guidance		
Summary of requirements and guidance	YES	Section 2.0 of NEDC-33938P and Sections 2.1 and 2.2 of LAR RS-22-064.
Requirements documents referenced	YES	Section 2.0 of NEDC-33938P and Sections 2.1 and 2.2 of LAR RS-22-064.
Guidance documents referenced	YES	Section 2.0 of NEDC-33938P and Sections 2.1 and 2.2 of LAR RS-22-064.
Acceptance criteria described	YES	Section 2.0 of NEDC-33938P and Sections 2.1 and 2.2 of LAR RS-22-064.
3.0 Reactor and Fuel Design Description		

Subject	Included	Notes / Explanation
Describe reactor operating parameters	NO	Not applicable for this analysis. See Sections 3.7 and 5.5 of NEDC-33938P for depletion parameters and assumptions.
Describe all fuel in pool	YES	Section 4.0 and Appendix B of NEDC-33938P.
Geometric dimensions (Nominal and Tolerances)	YES	Section 4.1 of NEDC-33938P.
Schematic of guide tube patterns	NO	Not applicable for BWR fuel; therefore, not applicable to NEDC-33938P.
Material compositions	YES	Section 4.0 of NEDC-33938P.
Describe future fuel to be covered	YES	Section 4.0 of NEDC-33938P.
Geometric dimensions (Nominal and Tolerances)	YES	Section 4.1 NEDC-33938P.
Schematic of guide tube patterns	NO	Not applicable for BWR fuel; therefore, not applicable to NEDC-33938P.
Material compositions	YES	Section 4.0 of NEDC-33938P.
Describe all fuel inserts	NO	Not applicable for BWR fuel; therefore, not applicable to NEDC-33938P.
Geometric Dimensions (Nominal and Tolerances)		
Schematic (axial/cross-section)		
Material compositions		
Describe non-standard fuel	YES	Sections 4.0 and 5.5.3 of NEDC-33938P.
Geometric dimensions		
Describe non-fuel items in fuel cells	YES	Section 4.0 of NEDC-33938P.
Nominal and tolerance dimensions	NO	Not applicable; analysis NEDC-33938P covers peak reactivity in every spent fuel pool rack cell location.
4.0 Spent Fuel Pool/Storage Rack Description		
New fuel vault & Storage rack description	YES	The new fuel vault analysis will be covered by the GESTAR II methodology and is not addressed in NEDC-33938P. See Section 2.2 of LAR RS-22-064 for details.
Nominal and tolerance dimensions		
Schematic (axial/cross-section)		
Material compositions		
Spent fuel pool, Storage rack description	YES	Sections 5.1-5.2 of NEDC-33938P and Section 3.1 of LAR RS-22-064.
Nominal and tolerance dimensions		
Schematic (axial/cross-section)		
Material compositions		
Other Reactivity Control Devices (Inserts)	YES	Sections 5.1-5.2 of NEDC-33938P and Section 3.1 of LAR RS-22-064.
Nominal and tolerance dimensions		
Schematic (axial/cross-section)		
Material compositions		

Subject	Included	Notes / Explanation
5.0 Overview of the Method of Analysis		
New fuel rack analysis description	YES	The new fuel vault analysis will be covered by the GESTAR II methodology and is not addressed in NEDC-33938P. See Section 2.2 of LAR RS-22-064 for details.
Storage geometries		
Bounding assembly design(s)		
Integral absorber credit		
Accident analysis		
Spent fuel storage rack analysis description	YES	Sections 3.5-3.7 and 5.0 of NEDC-33938P.
Storage geometries	YES	Sections 5.1-5.2 of NEDC-33938P and Section 3.1 of LAR RS-22-064.
Bounding assembly design(s)	YES	Section 5.3 of NEDC-33938P.
Soluble boron credit	NO	Not applicable - No soluble boron credit in BWR criticality analysis NEDC-33938P.
Boron dilution analysis		
Burnup credit	NO	No burnup credit in BWR peak reactivity analysis NEDC-33938P – fuel is evaluated at peak reactivity
Decay/Cooling time credit	NO	No decay/cooling time credit in NEDC-33938P.
Integral absorber credit	YES	Sections 5.1-5.2 of NEDC-33938P.
Other credit	NO	No other credit in analysis NEDC-33938P.
Fixed neutron absorbers	YES	Boral panels – Sections 5.1-5.2 of NEDC-33938P and Section 3.1 of LAR RS-22-064.
Aging management program	NO	Aging is not included in this analysis. Boral coupon surveillance program is covered by a previously approved license amendment.
Accident analysis	YES	Section 5.5.3 of NEDC-33938P.
Temperature increase	YES	Sections 5.4-5.5 of NEDC-33938P.
Assembly drop	YES	Section 5.5.3 of NEDC-33938P.
Single assembly misload	YES	Section 5.5.3 of NEDC-33938P.
Multiple misload	NO	The Dresden Unit 2 and Unit 3 spent fuel pools are uniform pools. There is no opportunity for multiple misload.
Boron dilution	NO	Not applicable - No soluble boron credit in BWR criticality analysis NEDC-33938P.
Other	YES	Sections 5.5.3 of NEDC-33938P.
Fuel out of rack analysis	YES	Section 5.5.3 of NEDC-33938P considers the worst case abnormal positioning of a fuel assembly outside a storage rack.
Handling		
Movement		
Inspection		

Subject	Included	Notes / Explanation
6.0 Computer Codes, Cross Sections and Validation Overview		
Code/Modules Used for Calculation of k_{eff}	YES	Section 3.0 of NEDC-33938P.
Cross section library	YES	Section 3.1 of NEDC-33938P.
Description of nuclides used	YES	Section 4.2 of NEDC-33938P.
Convergence checks	YES	Section 3.3 of NEDC-33938P.
Code/Module Used for Depletion Calculation	YES	Section 3.0 of NEDC-33938P.
Cross section library	YES	Section 3.1 of NEDC-33938P.
Description of nuclides used	YES	Section 4.2 of NEDC-33938P.
Convergence checks	YES	Section 3.3 of NEDC-33938P.
Validation of Code and Library	YES	Section 3.4 and Appendix A of NEDC-33938P.
Major Actinides and Structural Materials	YES	Section 3.4 of NEDC-33938P.
Minor Actinides and Fission Products	YES	Section 3.4 of NEDC-33938P.
Absorbers Credited	YES	Section 3.4 of NEDC-33938P.
7.0 Criticality Safety Analysis of the New Fuel Rack		
Rack model	YES	The new fuel vault (NFV) rack criticality safety analysis coverage for the new GNF3 fuel will be the GESTAR II analysis for the GE designed low density NFV racks upon approval of this license amendment. The Dresden NFV racks are GE designed low density racks with an interrack spacing of ~11 inches, which is ≥ 10.5 inches (the criteria listed in GESTAR II) and thus, the racks may be utilized to store new GNF fuel with in-core SCCG $k_{inf} \leq 1.31$. See Section 2.2 of LAR RS-22-064 for details.
Boundary conditions		
Source distribution		
Geometry restrictions		
Limiting fuel design		
Fuel density		
Burnable Poisons		
Fuel dimensions		
Axial blankets		
Limiting rack model		
Storage vault dimensions and materials		
Temperature		
Multiple regions/configurations		
Flooded		
Low density moderator		
Eccentric fuel placement		
Tolerances		
Fuel geometry		
Fuel pin pitch		
Fuel pellet OD		
Fuel clad OD		
Fuel content		
Enrichment		
Density		
Integral absorber		

Subject	Included	Notes / Explanation
Rack geometry		
Rack pitch		
Cell wall thickness		
Storage vault dimensions/materials		
Code uncertainty		
Biases		
Temperature		
Code bias		
Moderator Conditions		
Fully flooded and optimum density moderator		
8.0 Depletion Analysis for Spent Fuel		
Depletion Model Considerations	YES (NO for Soluble Boron)	Sections 3.0, 3.3, 3.4, 3.7, and 4.2 of NEDC-33938P. Soluble Boron not applicable to BWR analysis.
Time step verification		
Convergence verification		
Simplifications		
Non-uniform enrichments		
Post Depletion Nuclide Adjustment		
Cooling Time		
Depletion Parameters		
Burnable Absorbers		
Integral Absorbers		
Soluble Boron		
Fuel and Moderator Temperature		
Power		
Control rod insertion		
Atypical Cycle Operating History		
9.0 Criticality Safety Analysis of Spent Fuel Pool Storage Racks		
Rack model	YES	Section 5.2 of NEDC-33938P.
Boundary conditions		
Source distribution		
Geometry restrictions		
Design Basis Fuel Description	YES	Section 5.3 of NEDC-33938P.
Fuel density	YES	Section 4.1 of NEDC-33938P.
Burnable Poisons	YES	Sections 4.1, 4.2, and 5.3 of NEDC-33938P.
Fuel assembly inserts	NO	No fuel assembly inserts in analysis NEDC-33938P and none in use at Dresden.
Fuel dimensions	YES	Section 4.1 of NEDC-33938P.
Axial blankets	NO	Section 3.7 of NEDC-33938P.
Configurations considered	YES	Section 5.4 of NEDC-33938P.

Subject	Included	Notes / Explanation
Borated	NO	Not applicable for BWR analysis NEDC-33938P.
Unborated	YES	BWR analysis NEDC-33938P considers the spent fuel pool to be unborated.
Multiple rack designs	NO	NEDC-33938P utilizes only one spent fuel rack design because only one is present at Dresden. The NFV racks are covered by the GESTAR II analysis (see Section 2.2 of LAR RS-22-064).
Alternate storage geometry	NO	Not applicable for analysis NEDC-33938P.
Reactivity Control Devices	YES	Sections 5.1-5.2 of NEDC-33938P.
Fuel Assembly Inserts	NO	No fuel assembly inserts in analysis NEDC-33938P or in use at Dresden.
Storage Cell Inserts	YES	Sections 5.1-5.2 of NEDC-33938P contain information on Boral panels (no rack inserts)
Storage Cell Blocking Devices	NO	No blocking devices in analysis NEDC-33938P or in use at Dresden.
Axial burnup shapes	NO	Section 3.7 of NEDC-33938P.
Uniform/Distributed	YES	Section 3.7 of NEDC-33938P.
Nodalization	NO	Section 3.7 of NEDC-33938P.
Blankets modeled	NO	Section 3.7 of NEDC-33938P.
Tolerances/Uncertainties	YES	Sections 5.6 and 5.7 of NEDC-33938P.
Fuel geometry		
Fuel rod pin pitch		
Fuel pellet OD		
Cladding OD		
Axial fuel position	NO	Section 3.7 of NEDC-33938P.
Fuel content	YES	Section 5.6 of NEDC-33938P.
Enrichment		
Density		
Assembly insert dimensions and materials	NO	No fuel assembly inserts in analysis NEDC-33938P or in use at Dresden.

Subject	Included	Notes / Explanation
Rack geometry	YES	Section 5.6 of NEDC-33938P.
Flux-trap size (width)	NO	Not applicable to non-flux-trap racks, such as those in the Dresden SFP.
Rack cell pitch	YES	Section 5.6 of NEDC-33938P.
Rack wall thickness	YES	Section 5.6 of NEDC-33938P.
Neutron Absorber Dimensions	YES	Section 5.6 of NEDC-33938P.
Rack insert dimensions and materials	NO	No rack inserts in NEDC-33938P and none in use at Dresden station.
Code validation uncertainty	YES	Sections 3.4, 5.6, and Appendix A of NEDC-33938P.
Criticality case uncertainty	YES	Section 5.6 of NEDC-33938P.
Depletion Uncertainty	YES	Sections 3.4, 5.8
Burnup Uncertainty	NO	Not applicable for BWR peak reactivity analysis NEDC-33938P.
Biases	YES	Section 5.0 of NEDC-33938P.
Design Basis Fuel design	YES	Section 5.3 of NEDC-33938P.
Code bias	YES	Sections 3.4, 5.5 of NEDC-33938P.
Temperature	YES	Section 5.4 of NEDC-33938P.
Eccentric fuel placement	YES	Sections 5.4-5.5 of NEDC-33938P.
Incore thimble depletion effect	NO	Not applicable for analysis NEDC-33938P
NRC administrative margin	NO	Not applicable for analysis NEDC-33938P
Modeling simplifications	YES	Sections 3.7, 4.2 of NEDC-33938P.
Identified and described		
10.0 Interface Analysis		
Interface configurations analyzed	YES	Sections 5.5, 6.0 of NEDC-33938P.
Between dissimilar racks	YES	Section 6.0 of NEDC-33938P.
Between storage configurations within a rack	YES	Section 5.5 of NEDC-33938P.
Interface restrictions	NO	Section 6.0 of NEDC-33938P.
11.0 Normal Conditions		
Fuel handling equipment	NO	Not in the scope and does not impact results of criticality analysis NEDC-33938P.
Administrative controls	NO	No new administrative controls included in NEDC-33938P or LAR RS-22-064.
Fuel inspection equipment or processes	NO	Not in the scope and does not impact results of criticality analysis NEDC-33938P.
Fuel reconstitution	YES	Section 4.0 of NEDC-33938P.

Subject	Included	Notes / Explanation
12.0 Accident Analysis		
Boron dilution	NO	Not applicable - No soluble boron credit in BWR criticality analysis NEDC-33938P.
Normal conditions		
Accident conditions		
Single assembly misload	YES	Section 5.5.3 of NEDC-33938P.
Fuel assembly misplacement	YES	Section 5.5.3 of NEDC-33938P.
Neutron Absorber Insert Misload	NO	Not applicable as there are no neutron absorber inserts; however, no Boral on rack periphery is evaluated in Section 5.5.3 of NEDC-33938P.
Multiple fuel misloads	NO	Uniform pool, single storage configuration, no opportunity for multiple misloads.
Dropped assembly	YES	Section 5.5.3 of NEDC-33938P.
Temperature	YES	Sections 5.4 and 5.5 of NEDC-33938P.
Seismic event/other natural phenomena	YES	Section 5.5.3 of NEDC-33938P.
13.0 Analysis Results and Conclusions		
Summary of results	YES	Section 7.0 of NEDC-33938P.
Burnup curve(s)	NO	Not applicable for BWR peak reactivity analyses, including NEDC-33938P.
Intermediate Decay time treatment	NO	Not applicable for BWR peak reactivity analyses, including NEDC-33938P.
New administrative controls	NO	No new administrative controls included in NEDC-33938P or LAR RS-22-064.
Technical Specification markups	YES	Section 2.3 of LAR RS-22-064. Attachment 2 of LAR RS-22-064.
14.0 References	YES	**Section 8.0 of NEDC-33938P.**
Appendix A: Computer Code Validation:		**Appendix A of NEDC-33938P.**
Code validation methodology and bases	YES	Appendix A of NEDC-33938P.
New Fuel		
Depleted Fuel		
MOX		
HTC		
Convergence		
Trends		
Bias and uncertainty		
Range of applicability	YES	Described in Section 3.4 of NEDC-33938P.
Analysis of Area of Applicability coverage	YES	Described in Section 3.4 of NEDC-33938P.

ATTACHMENT 5

Global Nuclear Fuels - Americas, LLC 10 CFR 2.390 Affidavit

Global Nuclear Fuel – Americas

AFFIDAVIT

I, Brian R. Moore, state as follows:

(1) I am General Manager, Core & Fuel Engineering, Global Nuclear Fuel – Americas, LLC ("GNF-A"), and have been delegated the function of reviewing the information described in paragraph (2) which is sought to be withheld, and have been authorized to apply for its withholding.

(2) The information sought to be withheld is contained in GNF-A proprietary report, NEDC-33938P, "Dresden Nuclear Power Station Fuel Storage Criticality Safety Analysis," Revision 0, April 2022. GNF-A proprietary information within the text and tables is identified by a dotted underline placed within double square brackets. [[This sentence is an example.{3}]] Figures and large objects containing GNF-A proprietary information are identified with double square brackets before and after the object. In all cases, the superscript notation {3} refers to Paragraph (3) of this affidavit, which provides the basis for the proprietary determination.

(3) In making this application for withholding of proprietary information of which it is the owner or licensee, GNF-A relies upon the exemption from disclosure set forth in the Freedom of Information Act ("FOIA"), 5 USC Sec. 552(b)(4), and the Trade Secrets Act, 18 USC Sec. 1905, and NRC regulations 10 CFR 9.17(a)(4), and 2.390(a)(4) for "trade secrets" (Exemption 4). The material for which exemption from disclosure is here sought also qualify under the narrower definition of "trade secret", within the meanings assigned to those terms for purposes of FOIA Exemption 4 in, respectively, Critical Mass Energy Project v. Nuclear Regulatory Commission, 975 F2d 871 (DC Cir. 1992), and Public Citizen Health Research Group v. FDA, 704 F2d 1280 (DC Cir. 1983).

(4) Some examples of categories of information which fit into the definition of proprietary information are:

a. Information that discloses a process, method, or apparatus, including supporting data and analyses, where prevention of its use by GNF-A's competitors without license from GNF-A constitutes a competitive economic advantage over other companies;

b. Information which, if used by a competitor, would reduce his expenditure of resources or improve his competitive position in the design, manufacture, shipment, installation, assurance of quality, or licensing of a similar product;

c. Information which reveals aspects of past, present, or future GNF-A customer-funded development plans and programs, resulting in potential products to GNF-A;

d. Information which discloses patentable subject matter for which it may be desirable to obtain patent protection.

The information sought to be withheld is considered to be proprietary for the reasons set forth in paragraphs (4)a. and (4)b. above.

(5) To address 10 CFR 2.390 (b) (4), the information sought to be withheld is being submitted to NRC in confidence. The information is of a sort customarily held in confidence by GNF-A, and is in fact so held. The information sought to be withheld has, to the best of my knowledge and belief, consistently been held in confidence by GNF-A, no public disclosure has been made, and it is not available in public sources. All disclosures to third parties including any required transmittals to NRC, have been made, or must be made, pursuant to regulatory provisions or proprietary agreements which provide for maintenance of the information in confidence. Its initial designation as proprietary information, and the subsequent steps taken to prevent its unauthorized disclosure, are as set forth in paragraphs (6) and (7) following.

(6) Initial approval of proprietary treatment of a document is made by the manager of the originating component, the person most likely to be acquainted with the value and sensitivity of the information in relation to industry knowledge, or subject to the terms under which it was licensed to GNF-A.

(7) The procedure for approval of external release of such a document typically requires review by the staff manager, project manager, principal scientist or other equivalent authority, by the manager of the cognizant marketing function (or his delegate), and by the Legal Operation, for technical content, competitive effect, and determination of the accuracy of the proprietary designation. Disclosures outside GNF-A are limited to regulatory bodies, customers, and potential customers, and their agents, suppliers, and licensees, and others with a legitimate need for the information, and then only in accordance with appropriate regulatory provisions or proprietary agreements.

(8) The information identified in paragraph (2), above, is classified as proprietary because it contains details of GNF-A's fuel design and licensing methodology. The development of this methodology, along with the testing, development and approval was achieved at a significant cost to GNF-A or its licensor.

The development of the fuel design and licensing methodology along with the interpretation and application of the analytical results is derived from the extensive experience database that constitutes a major GNF-A asset.

(9) Public disclosure of the information sought to be withheld is likely to cause substantial harm to GNF-A's competitive position and foreclose or reduce the availability of profit-making opportunities. The information is part of GNF-A's comprehensive BWR safety and technology base, and its commercial value extends beyond the original development cost. The value of the technology base goes beyond the extensive physical database and analytical methodology and includes development of the expertise to determine and apply the appropriate evaluation process. In addition, the technology base includes the value derived from providing analyses done with NRC-approved methods.

The research, development, engineering, analytical, and NRC review costs comprise a substantial investment of time and money by GNF-A.

The precise value of the expertise to devise an evaluation process and apply the correct analytical methodology is difficult to quantify, but it clearly is substantial.

GNF-A's competitive advantage will be lost if its competitors are able to use the results of the GNF-A experience to normalize or verify their own process or if they are able to claim an equivalent understanding by demonstrating that they can arrive at the same or similar conclusions.

The value of this information to GNF-A would be lost if the information were disclosed to the public. Making such information available to competitors without their having been required to undertake a similar expenditure of resources would unfairly provide competitors with a windfall, and deprive GNF-A of the opportunity to exercise its competitive advantage to seek an adequate return on its large investment in developing and obtaining these very valuable analytical tools.

I declare under penalty of perjury that the foregoing is true and correct.

Executed on this 28th day of April 2022.

Brian R. Moore
General Manager, Core & Fuel Engineering
Global Nuclear Fuel – Americas, LLC
3901 Castle Hayne Road
Wilmington, NC 28401
Brian.Moore@ge.com