High Energy Arcing Fault Frequency and Consequence Modeling

Draft Report for Comment

U.S. Nuclear Regulatory Commission
Office of Nuclear Regulatory Research
Washington, D.C. 20555-0001

Electric Power Research Institute
3420 Hillview Avenue
Palo Alto, CA 94304-1338

AVAILABILITY OF REFERENCE MATERIALS IN NRC PUBLICATIONS

NRC Reference Material

As of November 1999, you may electronically access NUREG-series publications and other NRC records at the NRC's Library at www.nrc.gov/reading-rm.html. Publicly released records include, to name a few, NUREG-series publications; *Federal Register* notices; applicant, licensee, and vendor documents and correspondence; NRC correspondence and internal memoranda; bulletins and information notices; inspection and investigative reports; licensee event reports; and Commission papers and their attachments.

NRC publications in the NUREG series, NRC regulations, and Title 10, "Energy," in the *Code of Federal Regulations* may also be purchased from one of these two sources:

1. **The Superintendent of Documents**
   U.S. Government Publishing Office
   Washington, DC 20402-0001
   Internet: www.bookstore.gpo.gov
   Telephone: (202) 512-1800
   Fax: (202) 512-2104

2. **The National Technical Information Service**
   5301 Shawnee Road
   Alexandria, VA 22312-0002
   Internet: www.ntis.gov
   1-800-553-6847 or, locally, (703) 605-6000

A single copy of each NRC draft report for comment is available free, to the extent of supply, upon written request as follows:

Address: **U.S. Nuclear Regulatory Commission**
Office of Administration
Digital Communications and Administrative Services Branch
Washington, DC 20555-0001
E-mail: distribution.resource@nrc.gov
Facsimile: (301) 415-2289

Some publications in the NUREG series that are posted at the NRC's Web site address www.nrc.gov/reading-rm/doc-collections/nuregs are updated periodically and may differ from the last printed version. Although references to material found on a Web site bear the date the material was accessed, the material available on the date cited may subsequently be removed from the site.

Non-NRC Reference Material

Documents available from public and special technical libraries include all open literature items, such as books, journal articles, transactions, *Federal Register* notices, Federal and State legislation, and congressional reports. Such documents as theses, dissertations, foreign reports and translations, and non-NRC conference proceedings may be purchased from their sponsoring organization.

Copies of industry codes and standards used in a substantive manner in the NRC regulatory process are maintained at—

The NRC Technical Library
Two White Flint North
11545 Rockville Pike
Rockville, MD 20852-2738

These standards are available in the library for reference use by the public. Codes and standards are usually copyrighted and may be purchased from the originating organization or, if they are American National Standards, from—

American National Standards Institute
11 West 42nd Street
New York, NY 10036-8002
Internet: www.ansi.org
(212) 642-4900

Legally binding regulatory requirements are stated only in laws; NRC regulations; licenses, including technical specifications; or orders, not in NUREG-series publications. The views expressed in contractor prepared publications in this series are not necessarily those of the NRC.

The NUREG series comprises (1) technical and administrative reports and books prepared by the staff (NUREG–XXXX) or agency contractors (NUREG/CR–XXXX), (2) proceedings of conferences (NUREG/CP–XXXX), (3) reports resulting from international agreements (NUREG/IA–XXXX),(4) brochures (NUREG/BR–XXXX), and (5) compilations of legal decisions and orders of the Commission and the Atomic and Safety Licensing Boards and of Directors' decisions under Section 2.206 of the NRC's regulations (NUREG–0750).

High Energy Arcing Fault Frequency and Consequence Modeling

Draft Report for Comment

July 2022

U.S. Nuclear Regulatory Commission
Office of Nuclear Regulatory Research (RES)
Washington, D.C. 20555-0001

U.S. NRC-RES Project Manager
N. Melly

Electric Power Research Institute (EPRI)
3420 Hillview Avenue
Palo Alto, CA 94304-1338

EPRI Project Managers
A. Lindeman
M. Randelovic

COMMENTS ON DRAFT REPORT

Any interested party may submit comments on this report for consideration by the NRC staff. Comments may be accompanied by additional relevant information or supporting data. Please specify the report number **NUREG-2262** in your comments and send them by the end of the comment period specified in the *Federal Register* notice announcing the availability of this report.

Addresses: You may submit comments by any one of the following methods. Please include Docket ID **NRC-2022-130** in the subject line of your comments. Comments submitted in writing or in electronic form will be posted on the NRC website and on the Federal rulemaking website http://www.regulations.gov.

Federal Rulemaking Website: Go to http://www.regulations.gov and search for documents filed under Docket ID **NRC-2022-130**.

Mail comments to: Office of Administration, Mail Stop: TWFN-7-A60M, U.S. Nuclear Regulatory Commission, Washington, DC 20555-0001, ATTN: Division of Resource Management and Analysis.

For any questions about the material in this report, please contact: Gabriel Taylor, Senior Fire Protection Engineer, 301-415-0781 or by e-mail at Gabriel.Taylor@nrc.gov.

Please be aware that any comments that you submit to the NRC will be considered a public record and entered into the Agencywide Documents Access and Management System (ADAMS). Do not provide information you would not want to be publicly available.

THE FOLLOWING ORGANIZATION(S) PREPARED THIS REPORT:

Electric Power Research Institute (EPRI)

U.S. Nuclear Regulatory Commission, Office of Nuclear Regulatory Research

Fleischer Consultants, LLC

Jensen Hughes

NOTE

For further information about EPRI, call the EPRI Customer Assistance Center at 800.313.3774 or e-mail askepri@epri.com.

ABSTRACT

High energy arcing faults (HEAFs) are one type of hazard modeled in fire probabilistic risk assessments. NUREG/CR-6850 and NUREG/CR-6850 Supplement 1 provide the basic methods to analyze the risk associated with HEAFs in power distribution equipment (switchgear and load centers) and bus ducts (including iso-phase bus ducts), respectively. Since the publication of these two reports, the state of knowledge of the HEAF phenomena has advanced significantly. A thorough understanding of the nuclear power plant electrical distribution system and its performance during faulted conditions along with a review and categorization of industry events has occurred. Additionally, experimentation (including full scale testing on HEAF-susceptible equipment, small scale testing, and simulation) has increased the understanding of parameters that affect the dimensions of the zone of influence (ZOI).

This report combines previous HEAF-related research and provides methods and data to more realistically calculate plant risk due to HEAFs. Ignition frequency and non-suppression estimates are updated with the most recently available industry operating experience. Most importantly, the ZOI selection is greatly expanded. Previously, there was one ZOI for switchgear and load centers, a ZOI for bus ducts, and a ZOI for iso-phase bus ducts. The computational fluid dynamics software, Fire Dynamics Simulator (FDS), has been benchmarked against full scale tests and is used to predict the thermal exposure of targets in the vicinity of a HEAF. FDS simulations are performed for three classes of equipment; load centers, switchgear, and non-segregated bus ducts. The simulations varied parameters such as arc energy, duration, location, electrode composition, and type of equipment. The ZOIs results from the simulation effort are reviewed and grouped by the working group to determine consensus ZOIs for the three classes of equipment with varying levels of detail commensurate with potential risk significance.

A key parameter of the ZOI is the time overcurrent (51) relay setting of the auxiliary power transformer. The faster the fault clearing time the smaller the energy release. The speed of this protection determines if the updated medium voltage switchgear ZOIs are smaller or larger than the ZOI in NUREG/CR-6850. For non-segregated bus ducts, the ZOIs are also dependent on the enclosure material of the bus duct (either aluminum or steel). In general, the ZOIs for non-segregated bus ducts are larger, except for fault clearing times of 2 seconds or less on the station auxiliary transformer (feed from offsite). The load center supply breaker ZOIs are smaller than the ZOI recommended in NUREG/CR-6850.

Keywords

Arcing fault | Fire events | Fire ignition frequency (FIF)
Fire probabilistic risk assessment (FPRA) | High energy arcing fault (HEAF)

TABLE OF CONTENTS

LIST OF FIGURES

LIST OF TABLES

Executive Summary

Product Title: High Energy Arcing Fault Frequency and Consequence Modeling

---

PRIMARY AUDIENCE: Fire protection engineers, electrical engineers, and probabilistic risk assessment (PRA) engineers developing or reviewing fire risk assessments related to high energy arcing faults (HEAFs). The technical content of this report is based on a basic understanding of nuclear power plant electrical distribution systems and electrical protection features.

SECONDARY AUDIENCE: Engineers, reviewers, utility managers, and other stakeholders who conduct, review, or manage fire protection programs and need to understand the underlying technical basis for the hazards associated with HEAFs.

KEY RESEARCH QUESTION

Given the increased state of knowledge on the HEAF phenomena from both an operational experience and hazard characterization, how should HEAFs be modeled in fire PRAs?

RESEARCH OVERVIEW

The U.S. Nuclear Regulatory Commission (NRC) Office of Nuclear Regulatory Research and the Electric Power Research Institute (EPRI) HEAF working group has been tasked with improving the methodology for analyzing the HEAF hazards at nuclear power plants. Previous technical reports addressed damage and ignition thresholds (fragility) and hazard modeling. RIL 2022-01 documents cable target fragility thresholds. The hazard modeling was conducted using Fire Dynamics Simulator (FDS). FDS simulations of HEAFs are performed for three classes of equipment, specifically load centers, medium voltage switchgear and non-segregated bus ducts. For each class of equipment, parameters such as arc energy, duration, arc location, electrode composition are varied.

In parallel, the working group developed the framework for analyzing HEAFs in fire PRA. The working group developed a generic HEAF fault zone map, which serves as the technical basis for the HEAF durations and energies considered in the FDS simulations. The fault progression trees were discussed at several working group meetings. An expert panel was convened to determine split fractions for medium voltage switchgear; portions of this exercise are extended to the modeling of non-segregated bus ducts which have similar fault characteristics / electrical protection.

The HEAF end states in the fault progression trees are translated form the basis for the zone of influence (ZOI) definition and discussion. Where more than one fault type is likely, an event tree and split fractions are provided. As the results of the FDS simulations were completed, the working group met to review and consolidate the results into consensus ZOIs and finalize the fire PRA guidance for each HEAF-related ignition source.

KEY FINDINGS

- The nuclear power plant electrical distribution system (EDS) is divided into different fault zones. Each fault zone contains a portion of the EDS with similar equipment and fault characteristics. The fault zones are summarized in Table 3-1 and shown in Figure ES-1.

Auxiliary power transformer and bus protection are described in detail in Section 3 and form the basis for the durations used in the HEAF ZOI definition.

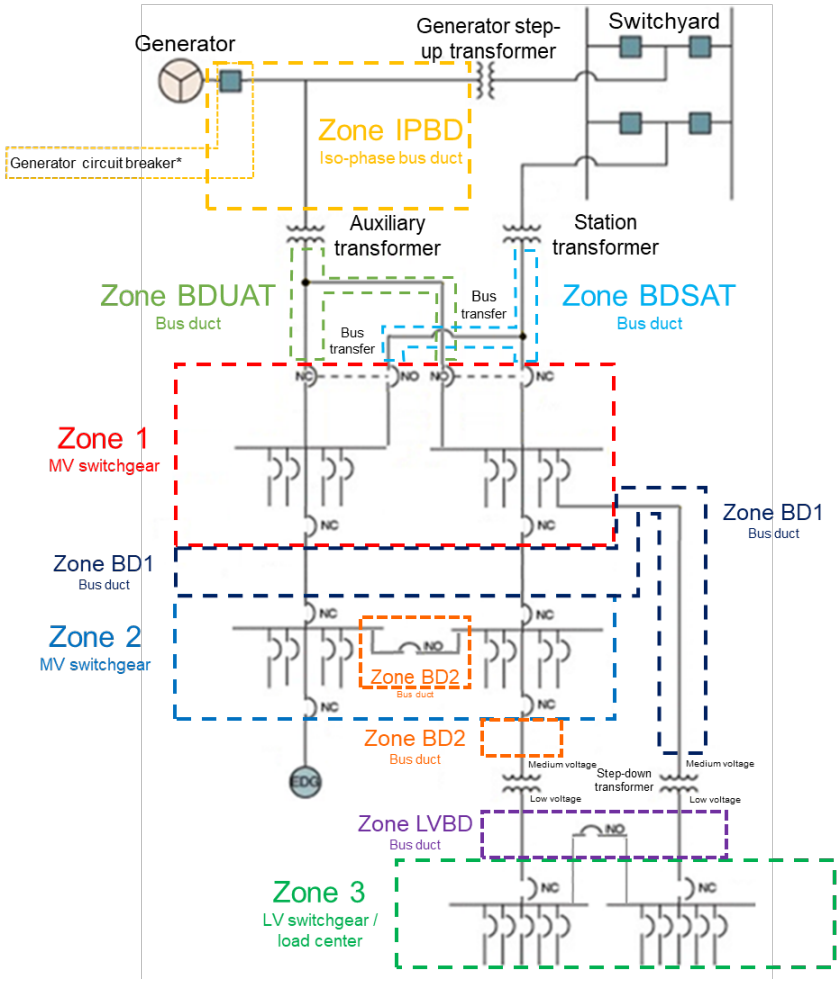

Figure ES-1
HEAF zones for a simplified NPP electrical distribution system

- Section 5.2 provides the ignition source counting guidance for HEAFs in fire PRA:
  - Bin 16.a (load centers): Count the supply breakers (do not count by vertical section)
  - Bin 16.b (medium voltage switchgear): Count the entire switchgear bank (do not count by vertical section). Section 5.2.2.1 introduces a switchgear weighting factor that distributes the generic Bin 16.b frequency based on operating experience.
  - Bin 16.1-1 and Bin 16.1-2 (non-segregated bus ducts): the same counting recommendations as NUREG/CR-6850 Supplement 1 apply for known transition points (Section 5.2.3.1) and unknown transition points (Section 5.2.3.2). For known transition points, the analyst is cautioned that HEAFs can occur at environmental access locations (such as ventilation openings, mechanical hatches, or external wall penetrations). These environmental access locations should be considered in the fire PRA target selection/scenario process.
  - Bin 16.2 (iso-phase bus ducts): Generally, one iso-phase bus per unit (an iso-phase bus includes all three phases).

- Section 5.3 calculates updated ignition frequencies for the HEAF-related bins through 2021 (Table 5-8).

- Section 5.3.1 defines a generator circuit breaker (GCB), the equipment that can be protected by a GCB, and a modifier that can be used in scenarios where the GCB can interrupt a fault.

- Section 5.4 provides an updated HEAF manual non-suppression rate.

- Section 6 provides general guidance on the energetic portion of the HEAF ZOI, how to determine fault clearing times, and characteristics of the post-HEAF ensuing fire.

- Section 7 provides the energetic ZOIs for load centers.
    - There are 8 ZOIs dependent on the location of the load center supply breaker (end or interior location, and upper or lower elevation) and fragility threshold (either 15 MJ/m^2 or 30 MJ/m^2). See Table 7-1 for a full listing of the ZOI dimensions.
    - These energetic ZOIs are smaller than the ZOIs in NUREG/CR-6850 (e.g., the NUREG/CR-6850 ZOI bounds the new ZOIs).
        - Regardless of the configuration there is no front and back ZOI for load centers (a post-HEAF ensuing fire is still postulated).
        - For the smallest ZOI, an interior supply breaker on the lower half of the load center, does not have an external ZOI associated with the energetic phase (but a post-HEAF ensuing fire is still postulated).

- Section 8 provides the energetic ZOIs for medium voltage switchgear.
    - Table 8-2 provides the screening ZOIs.
    - Zone 1 (medium voltage switchgear fed directly from the auxiliary power transformers) configuration specific ZOIs are provided in Table 8-3 (15 MJ/m^2) and Table 8-4 (30 MJ/m^2).
    - Zone 2 (medium voltage switchgear fed by an intermediary switchgear) configuration specific ZOIs are provided in Table 8-5 (15 MJ/m^2) and Table 8-6 (30 MJ/m^2).
    - The ZOI dimensions are sensitive to the backup time overcurrent relay setting of the transformer. Faster clearing times are less likely to exceed the ZOI in NUREG/CR-6850.
        - For the 15 MJ/m^2 fragility (thermoplastic targets and aluminum enclosed bus ducts) fault points outside the transformer zone of differential protection (Zone 1 main bus bar and loads and Zone 2) are subject to larger ZOIs for unit auxiliary transformers (UAT) fault clearing times greater than 0.50 seconds and station auxiliary transformer (SAT) fault clearing times greater than 4 seconds.
        - For the 30 MJ/m^2 fragility (thermoset targets and steel enclosed bus ducts) fault points outside the transformer zone of differential protection (Zone 1 main bus bar and loads and Zone 2) are subject to larger ZOIs for UAT fault clearing times greater than 3 seconds.

- Section 9 provides the energetic ZOIs for isolated-phase bus ducts (IPBD) and non-segregated bus ducts (NSBD).
    - Section 9.3.1 provides the ZOI guidance for the IPBD (carried over from NUREG/CR-6850 Supplement 1).
    - Table 9-2 provides the ZOIs for bus ducts.

- The enclosure material (either aluminum or steel) has an impact on the ZOI dimensions. The steel enclosure, which takes more energy to breach, has a smaller ZOI than the faster breaching aluminum enclosure.
- The NSBD ZOIs are generally larger than those in NUREG/CR-6850 Supplement 1.

- **WHY THIS MATTERS**
- This report provides a consensus position to assist researchers, analysts, and stakeholders to evaluate the HEAF hazard. The conclusions provided support advances in the method, tools, and data to assess the HEAF hazard in nuclear facilities.

- **HOW TO APPLY RESULTS**
- Section 5 provides the analyst updated ignition source counting guidance, updated fire ignition frequencies, credit for installed generator circuit breakers, and updated HEAF manual non-suppression probabilities.
- Section 6 provides general guidance on the energetic ZOI, how to determine fault clearing times, and characteristics of the post-HEAF ensuing fire.
- Section 7 provides ZOIs for load centers. Section 8 provides ZOIs for medium voltage switchgear. Section 9 provides ZOIs for non-segregated bus ducts. Lastly, Section 10 summarizes the guidance for each type of HEAF-susceptible equipment.

- **LEARNING AND ENGAGEMENT OPPORTUNITIES**
- Users of this report may be interested in periodic stakeholder engagement opportunities with EPRI and/or NRC on this topic.

- **EPRI CONTACTS**: Ashley Lindeman, Principal Technical Leader, 704.595.2538 alindeman@epri.com and Marko Randelovic, Principal Technical Leader, 252.621.4654, mrandelovic@epri.com

- **NRC CONTACT:** Nicholas Melly, Fire Protection Engineer, 301.415.2392, nicholas.melly@nrc.gov

- **PROGRAM:** Nuclear Power, P41; Risk and Safety Management, P41.07.01

- **IMPLEMENTATION CATEGORY:** Plant Optimization

CITATIONS

This report was prepared by the following:

Electric Power Research Institute
3420 Hillview Avenue
Palo Alto, CA 94304

Principal Investigators:

A. Lindeman
M. Randelovic

U.S. Nuclear Regulatory Commission
Office of Nuclear Regulatory Research
Washington, D.C. 20555-0001

Principal Investigators:

N. Melly
K. Miller
G. Taylor

Tennessee Valley Authority
Nuclear Plant Road
Athens, AL 35611
Principal Investigator:

P. S. Lovvorn

Under contract to EPRI:

Jensen Hughes, Inc.
111 Rockville Pike, Suite 550
Rockville, MD 20850

Principal Investigators:

S. Hunt
J. Floyd
D. Lovelace
V. Ontiveros

Fleischer Consultants, LLC
Lansdale, PA 19446

Principal Investigator:
K. Fleischer

The report describes research sponsored jointly by the U.S. Nuclear Regulatory Commission's (NRC's) Office of Nuclear Regulatory Research (RES) and the Electric Power Research Institute (EPRI) performed under a formal Memorandum of Understanding (MOU).

ACKNOWLEDGMENTS

The authors would like to thank Joe Krvavac of Sargent & Lundy for providing valuable technical input. In particular the IEEE article, *Through-fault capability requirements for unit auxiliary transformers* provided basis for benchmarking and modeling the generator energy decay exponential curve.

ABBREVIATIONS

AC	alternating current
ACB	air cooled circuit-breaker
ADAMS	Agencywide Documents Access and Management System
ANSI	American National Standards Institute
ASC	available short circuit
AT	auxiliary transformer
BD	bus duct
CCF	common cause failure
CDF	core damage frequency
CFD	computational fluid dynamics
CIGRE	International Council on Large Electric Systems
CPT	control power transformer
CT	current transformer
EDG	emergency diesel generator
EDS	electrical distribution system
EPRI	Electric Power Research Institute
ERFBS	electric fire raceway barrier systems
ESST	Emergency Station Service Transformer
FAQ	frequently asked question
FCT	fault clearing time
FDS	Fire Dynamics Simulator
FEDB	EPRI's fire events database

GCB	generator circuit breaker
GE	General Electric
GSU	generator step-up transformer
HEAF	high energy arcing fault
HRR	heat release rate
ICS	Integrated Control System
IEEE	Institute of Electrical and Electronics Engineers
INPO	Institute of Nuclear Power Operations
IOC	instantaneous overcurrent
IPBD	iso-phase bus duct
IRIS	INPO's Industry Reporting and Information System
kA	kilo-ampere
kW	kilowatts
kVA	kilo-volt-ampere
LER	licensee event report
LC	load center
LV	low voltage
LVPCB	low voltage power circuit breakers
MCC	motor control center
MCCB	molded case circuit breaker
MOU	Memorandum of Understanding
MOV	motor operated valve
MPT	main power transformer
MV	medium voltage
NEA	Nuclear Energy Agency
NEMA	National Electrical Manufacturers Association

NIST	National Institute of Standards and Technology
NPP	nuclear power plant
NRC	Nuclear Regulatory Commission
NRR	Office of Nuclear Reactor Regulation
NSBD	non-segregated bus duct
NSP	non-suppression probability
OECD	Organisation for Economic and Cooperative Development
OPEX	operational experience
PCCBB	primary cable compartment bus bar
PDS	protective device/scheme
PRA	probabilistic risk assessment
RAT	reserve auxiliary transformer
RES	Office of Nuclear Regulatory Research
RMS	root mean square
S/NRA/R	Regulatory Standard and Research Department, Secretariat of Nuclear Regulation Authority
SAT	Station Auxiliary Transformer (commonly referred to for any offsite power transformer)
SCR	silicon controlled rectifier
SI	International System of Units
SNL	Sandia National Laboratories
SOE	sequence of events
SONGS	San Onofre Nuclear Generating Station
SST	station service transformer
SUT	start-up transformer
SWGR	switchgear
SWYD	switchyard
TCC	time-current-characteristic

TOC	time overcurrent
TOL	thermal overload
TP	thermoplastic
TS	thermoset
UAT	unit auxiliary transformer
V	volts
VAC	volts in AC
VDC	voltage in DC
WG	Working Group
XFMR	transformer
ZOI	zone of influence

1 INTRODUCTION

Fire probabilistic risk assessments (PRAs) model fire hazards that can occur in commercial nuclear power plants (NPPs). High-energy arcing faults (HEAFs) are a unique hazard for bus ducts, switchgear, and load centers that are characterized by a substantial energetic arc followed by an ensuing fire. The arc releases energy in the form of heat, vaporized material, and mechanical force. This arc leads to an ensuing fire that can damage cables and components. At the time of EPRI 1011989/NUREG/CR-6850's publication [1], the phenomena was known, but the state of knowledge was low for HEAFs in switchgear and load centers. The zone of influence (ZOI), which is the distance where a HEAF can cause damage, was developed primarily from a single, catastrophic event involving a medium-voltage switchgear. NUREG/CR-6850 did not provide a treatment for bus duct HEAFs, although that was later addressed in FAQ 07-0035 published in NUREG/CR-6850 Supplement 1 [2]. Recent industry operating experience (OPEX), such as the Onagawa event following the Tohoku earthquake, has led to testing by multiple stakeholders investigating the HEAF phenomena.

Although HEAFs are not the most frequently occurring fire events in NPPs, these have the potential to cause extensive damage to adjacent equipment and cables from the electrical explosion and from the ensuing fire which may extend beyond the energetic portion of the ZOI.

This report provides a methodology for modeling the hazards resulting from HEAFs with a focus on expected durations and likelihood given various electrical distribution system (EDS) alignments. This report also provides updated fire ignition frequencies, split fractions, and non-suppression probabilities for use in fire PRA.

1.1 A Brief History of HEAF Research

HEAF events have occurred in both the United States and internationally and have been of interest in fire PRA development since the early 2000s. Two significant HEAF events are the 2001 event at San Onofre Nuclear Generating Station (SONGS) and the 2011 event at Onagawa. The SONGS event was used by researchers as the primary input to develop the ZOI for switchgear and load centers in NUREG/CR-6850 Appendix M. The HEAF event at Onagawa led to full-scale experimental efforts to learn more about the physical phenomena and potential range of collateral damage [3].

At SONGS 3 on February 3, 2001, a bus supply circuit breaker suffered a fault shortly after closing and a fire started within the breaker cubicle of a medium-voltage switchgear. The fault persisted, lasting an additional 4 to 15 seconds, as the generator coasted down, even though it was quickly detected by the unit auxiliary transformer's (UAT) differential protection. The fire consumed much of the breaker's non-metallic parts and caused substantial melting of current carrying components. Five vertical cabinet sections were damaged and required repair or replacement. The damage also included electrical equipment and cables that were burned directly or damaged by the fire [4]. The damage from this event was used primarily to develop the ZOI in the NUREG/CR-6850 Appendix M HEAF model.

Following the 2011 Tohoku earthquake, an arcing fault occurred in the No. 7 and No. 8 sections of the non-emergency 6.9 kV switchgear at the Onagawa nuclear power plant. The arcing fault

led to a fire in all ten vertical sections of the switchgear [5]. Control cable for non-emergency equipment directly above the cabinet were affected by the fire. No emergency components and cables in the room were affected [5].

Following the Onagawa HEAF event, a series of experiments were performed by the Regulatory Standard and Research Department, Secretariat of Nuclear Regulation Authority (S/NRA/R) of Japan. The U.S. Nuclear Regulatory Commission (NRC) Office of Nuclear Regulatory Research (RES) was invited to observe and support the testing that occurred between 2013 and 2015. The results of these tests are documented in NUREG/IA-0470 [3]. One observation from this test series was a greater than expected thermal energy release, hypothesized from the oxidation of aluminum bus bars when compared to copper bus bars.

From 2014 to 2016 the U.S. NRC-RES, in collaboration with the Nuclear Energy Agency (NEA), the National Institute of Standards and Technology (NIST), and additional groups though the Organisation for Economic and Cooperative Development (OECD) performed 26 full-scale HEAF experiments. One aspect of this test series was to confirm the ZOI in Appendix M of NUREG/CR-6850. The results of this test series are summarized in NRC Information Notice 2017-04 [6] and in NEA/CSNI/R(2017)7 [7]. While the experiments primarily tested equipment containing copper bus bars, some results from experiments involving aluminum resulted in more significant releases of energy when compared to those involving copper. Additionally, these experiments suggested that aluminum byproducts of a HEAF event – primarily aluminum oxide – could be expelled over far greater distances than the ZOI prescribed in NUREG/CR-6850. Given the apparent significance of these observations, a possible Generic Issue concerting the vulnerability of current carrying aluminum components subject to HEAFs was initiated in May 2016 [8].

In 2017, U.S. NRC-RES proposed a second phase of testing to supplement the experiments performed between 2014 and 2016 [9]. These tests would focus on three key areas: arc initiation/location, arc current/voltage, and arc duration. In addition to these parameters, the direct comparison of aluminum versus copper equipment (primarily bus bars) was a key objective of the follow-on testing. Additional testing on load centers was performed in 2019 [10]. For the 480 volt (V) test, arcs could not be sustained within the main bus bar compartment section. Several attempts performed at 600 V also failed. Only one specific and controlled location within the load center main bus bar compartment could sustain an erratic arc at 600 V. A combination of free volume, lack of barriers, and magnetic forces propelling the arc to the ends of the bus bars were the primary cause of arc self-extinguishment. This was evidenced by the significant arc erosion observed at the ends of the bus bars which was not at the location where the shorting wire was placed. One other test did successfully demonstrate an arc could sustain inside the circuit breaker cubicle, a confined space separate from the main bus compartment and representative of the only two load center HEAF operating experience events.

Concurrently, the Electric Power Research Institute (EPRI) performed detailed reviews of the HEAF operating experience, categorized and ranked the electrical distribution system designs vulnerable to generator-fed faults and susceptibility of safety related buses, and discussed maintenance and testing practices that may reduce the likelihood of a HEAF event. These reviews are documented in three white papers [11, 12, 13].

Due to the simplicity of the HEAF model in NUREG/CR-6850, target fragilities were not required. In 2020, the NRC and Sandia National Laboratories (SNL) conducted fragility testing to investigate the physics and failure modes of cables exposed to a HEAF. These tests subjected thermoset and thermoplastic cables to high heat flux short duration exposures. The results of the testing are documented in [14]. A follow-on effort between EPRI and the NRC analyzed the available data and proposed fragility criteria. This effort is documented in [15].

In parallel, modeling options for the effects of HEAFs on surrounding equipment were pursued. Several options were evaluated, including directly using the recorded test and operational data, empirical equations, or more detailed computational fluid dynamics / multi-physics models. Fire Dynamics Simulator (FDS) was ultimately chosen as the modeling tool. The development of FDS to model HEAFs was started in 2019 as a proof of concept. Benchmarking against previous testing was started in 2020. Validation and the final HEAF runs were performed in 2021 to support the in-person working group meeting. The methodology, validation, and results are documented in [16].

The NRC exited the generic issue process in August 2021. The closure memo identified that additional, long-term research was necessary to determine the issues' risk significance [17]. In October 2021 the NRC entered regulatory process LIC-504 [18]. Phase 1 of LIC-504 reaffirmed that no immediate safety issue exists. Phase 2 included pilot plants. Insights from the in-person walkdowns and analysis have been incorporated into this report.

1.2 Approach

This report documents an updated methodology and data to model HEAFs in fire PRA. This report combines the conclusions from previous efforts including categorization and analysis of nuclear power plant electrical design elements, HEAF operating experience, small and full scale testing, fragility thresholds, and ZOI determination.

The HEAF working group was initially formed in 2018 to support technical input into the NRC's full scale testing program. Over time the discussions and meetings shifted from experimentation into efforts supporting the fire PRA development needs. The working group is composed of technical experts in electrical engineering (including nuclear power plant electrical design and protection schemes), fire PRA/fire modeling, operating experience, and experimentation tasked to review the nuclear power plant electrical design elements, available test data, and the results from the FDS HEAF simulations.

The working group representation includes members from both the regulator (members from the NRC/National Laboratories) and the nuclear power industry (members from EPRI/nuclear power industry). The working group members are listed below:

Ashley Lindeman	EPRI
Marko Randelovic	EPRI
Tom Short	EPRI
Kenneth Hamburger	NRC-RES
Nicholas Melly	NRC-RES
Kenn Miller	NRC-RES
Gabriel Taylor	NRC-RES
JS Hyslop	NRC-NRR
Thinh Dinh	NRC-NRR
Chris LaFleur	Sandia National Labs
P. Shannon Lovvorn	Tennessee Valley Authority
Ken Fleischer	Fleischer Consultants
Dane Lovelace	Jensen Hughes
Jason Floyd	Jensen Hughes
Sean Hunt	Jensen Hughes

The technical basis for the fault durations and the initial PRA events trees were developed and iterated in 2019-2020 timeframe. Once this effort achieved relative consensus, the major focus shifted to defining fragility criteria and selecting a modeling tool to predict ZOIs. In November

2021 the working group met to review the output from the FDS simulations and to gain consensus on the ZOIs. This report incorporates the conclusions on fragility, zone of influence, and provides guidance to the PRA analyst on how to model HEAFs in fire PRA.

1.3 Purpose

The purpose of this report is to provide a methodology for the modeling of HEAFs in fire PRA. This methodology captures the different types of NPP electrical distribution and protection systems, fault locations, and fault durations that may impact the location, frequency, and consequence of a HEAF.

Specifically, the methodology described in this report provides the following:

- A generic nuclear power plant electrical distribution system fault zone map
- The technical basis for expected fault durations given a fault in a particular zone
- New ignition source counting methodology for Bin 16.a (load centers) and Bin 16.b (medium-voltage switchgear)
- Updated HEAF ignition frequencies using operating experience data through 2021
- Updated HEAF manual non-suppression probabilities using operating experience data through 2021
- ZOIs for load centers, medium voltage switchgear, and non-segregated bus ducts (ZOI for the iso-phase bus duct remains unchanged from NUREG/CR-6850 Supplement 1). The equipment-specific ZOIs account for the enclosure material (for bus ducts only), fault duration, and fault location.
    - Load centers: 12 energetic ZOIs based on bus supply circuit breaker location (end or interior), height (top, middle, bottom), bus supply circuit breaker elevation (lower or upper), and fragility threshold (15 MJ/m^2 or 30 MJ/m^2).
    - Medium-voltage (MV) switchgear: Energetic screening ZOIs and configuration/design specific ZOIs are developed. Screening ZOIs are intended to be applied around the entire switchgear bank. When more detail is necessary, configuration specific ZOIs with split fractions are provided separately for Zone 1 and Zone 2 switchgear. These configuration specific ZOIs consider power source, fault clearing time, fault location, and fragility threshold.
    - NSBD: 44 energetic ZOIs are provided considering the power source, fault clearing time, enclosure material, and fragility threshold.
- The characteristics of the post-HEAF thermal fire for switchgears and load centers.

1.4 Outline of Report

This report is organized as follows:

- Section 2 summarizes terms essential to the understanding of the HEAF model.
- Section 3 provides a detailed review of common plant electrical distribution system fault zones. This section also provides the technical basis for the fault zone event trees with

descriptions of the expected arcing fault durations associated with different electrical distribution system protection schemes.

- Section 4 reviews and categorizes the United States NPP HEAF operating experience. This section also describes how the electrical distribution system functioned during each HEAF event.
- Section 5 documents the data updates to the HEAF fire ignition frequency bins and the HEAF manual non-suppression rate.
- Section 6 documents the HEAF fragility thresholds, summarizes the types of faults considered, how to determine transformer fault clearing time, and how to model the post-HEAF ensuing fire for switchgear and load centers.
- Section 7 documents the energetic portion of the HEAF ZOI for load centers (also referred to as low-voltage switchgear).
- Section 8 documents the energetic portion of the HEAF ZOI for medium-voltage switchgear. Screening ZOIs and refinements, such as configuration specific ZOIs and their corresponding split fractions are detailed here.
- Section 9 documents the energetic portion of the bus duct HEAF ZOI.
- Section 10 summarizes the updated HEAF methodology documented in the preceding sections.
- Section 11 documents the references.
- Appendix A summarizes the United States HEAF events.
- Appendix B provides the basis for the continued disposition of HEAFs in motor control centers.
- Appendix C summarizes the expert panel on HEAF split fractions.
- Appendix D provides the linkage between the FDS ZOI report [16] and the energetic ZOIs used in Sections 7 through 9.
- Appendix E provides the energetic ZOI tables in the International System (SI) units.
- Appendix F provides an assessment of target fragility for equipment types not considered in the HEAF target fragility report [15].
- Appendix G provides examples of how to apply the methodology.

2
TERMINOLOGY

Similar to circuit analysis, the detailed treatment of HEAF scenarios is reliant upon an understanding of electrical engineering concepts, including nuclear power plant electrical distribution system design and protective features. A listing of the common terms essential to the understanding of the methodology is provided in the bullets below.

- Arc flash: The rapid release of energy (light and heat) due to an arcing fault between a phase conductor and another phase conductor, a neutral conductor, or a ground [19]. This type of fault is often the result of a brief contact of energized conductors with an initial short circuit of relatively low impedance. The impedance increases as the arc is produced and the surrounding air becomes the conductor. For example, if the electrical protective device that serves an individual load (e.g., motor) operates as designed, the fault will typically be limited to a number of cycles rather than a time interval.
    - For the purpose of classifying fire events, damage is contained within the confines of the component of origin. From post-observation of arc flashes, there is only minor damage and minimal bus bar degradation. There is **not** an ensuing fire.
- Arc blast: An arcing fault may burn away the source of the electrical short during the initial flash. If the fault is not interrupted, it may be sustained long enough to create a highly conductive plasma from the vaporized source material [19]. This plasma can sustain the arcing fault allowing greater lengths of copper or aluminum bus bar or wiring materials to vaporize. This results in an explosive volumetric increase of the heated air-plasma mixture around the arc fault path. A conservative estimate for the volume increase resulting from an arcing fault is 40,000 to 1 [19]. This expansion may produce gas pressures that can damage the initiating and immediately adjacent equipment (see Appendix E of RIL 2022-09 / EPRI 3002025123 [16]). It is possible to experience the pressure effects associated with an arc blast even if electrical protective systems work as designed.
    - For the purpose of classifying events, the damage zone may include the confines of the component of origin as well as the adjacent equipment through pressure rise effects but does **not** result in an ensuing fire.
- Bank: A grouping of adjoining switchgear vertical sections or load centers (see Figure 5-3). A bank includes both the incoming supply (or supplies) and load cubicles.
- Breaker-failure protection (per IEEE C37.95-2002 [20]): A breaker-failure protection or stuck breaker protection scheme is designed to operate in the event of a failure to trip or clear a fault by a breaker in the switchyard. A typical breaker-failure relaying scheme is initiated by an auxiliary relay associated with each of the transformer, bus, transmission line, or other schemes that trip that breaker. The breaker-failure initiated relay starts a timer relay (e.g., 62 - time-delay stopping or opening relay). A second input to the scheme is from an instantaneous-overcurrent fault detector (50FD, 50BF) relay or a circuit breaker 52a auxiliary contact. The time delay relay is set to allow time for the breaker to trip correctly (typically 3 to 5 cycles) plus time for the overcurrent fault detector to reset plus a margin. If the overcurrent fault-detector relay is still picked up or the 52a contact is still closed when the

timer times out, a lockout relay is tripped. The lockout relay, in turn, trips all breakers adjacent to the failed breaker. This is shown in Figure 2-1. The figure on the left shows the set of switchyard breakers nearest to the fault tripping, if one of these breakers were stuck (failed to trip open), then the breaker-failure scheme will trip all of the surrounding breakers as seen on the right.

Typical time for the breaker failure scheme to operate is 8 to 12 cycles to allow the typical 3 to 5 cycle switchyard breakers the first opportunity to clear the fault.

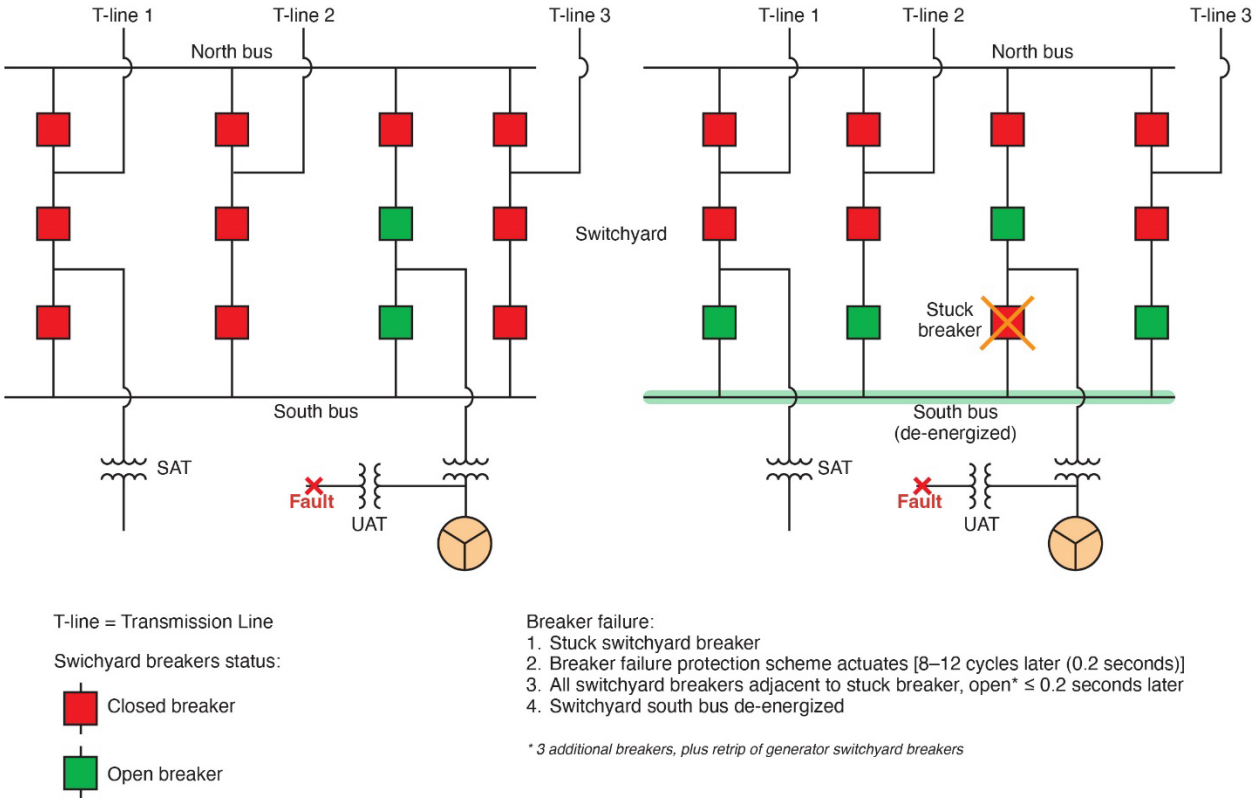

Figure 2-1
Switchyard Breaker-Failure Scheme

Note: A few NPPs may have MV switchgear equipped with bus differential (87)/bus breaker-failure schemes (e.g., 50FD and 62). For switchgear equipped with differential protection/breaker-failure schemes, the switchgear bus supply circuit breaker is supervised. If the bus supply circuit breaker remains “stuck” after a short time delay, the breaker-failure scheme will trip and lockout the upstream transformer approximately 8 to 12 cycles later (within 0.2 seconds) and is the basis for the minimum FCT in the Zone 1 MV switchgear with “stuck” bus supply circuit breaker.

- Bus-tie: An alternate source of power from another switchgear as opposed to a transformer. The bus-tie usually consists of one circuit breaker that is in one of the switchgear units. Protection is similar to a bus supply circuit breaker in that it has no instantaneous tripping element in order to remain coordinated with the bus loads it serves.

- Bus transfer: Manual or automatic power switching scheme that transfers the medium voltage switchgear supply from one auxiliary power source to another. Medium voltage

switchgear commonly has at least two bus supply circuit breakers. In the case of switchgear that are designed with a bus transfer scheme, the two sources may be the generator fed unit auxiliary transformer (UAT) and an offsite powered station auxiliary transformer (SAT). A common type of bus transfer scheme is the simultaneous fast "dead" bus transfer where the bus transfer signals are sent to (1) trip open the supply breaker and (2) close the alternate supply breaker simultaneously. Since the time to trip a breaker is faster than closing a breaker, there is a narrow "dead" band (typically 2 to 3 cycles) where there is no power supply to the switchgear. Since motors do not appreciably slow down during the first few cycles, this small dead band is considered acceptable to maintain synchronism of the bus with the alternate supply. Modern systems additionally use high-speed sync check relays or other form of supervised bus transfer scheme. Also, if the failure originated with the switchgear (bus lockout), the bus lockout signal will prevent the alternate supply breaker from closing in on the faulted bus, resulting in a de-energized bus.

- Class 1E: A term used by the U.S. nuclear industry to specify safety-related equipment according to IEEE Standard 308 [21]. The safety classification of the electric equipment and systems that are essential to emergency reactor shutdown, containment isolation, reactor core cooling, and containment and reactor heat removal or are otherwise essential in preventing significant release of radioactive material to the environment [22].
- Differential protection (ANSI/IEEE Device 87): High speed electrical protection considered as "zone" protection, in that a fault anywhere in the zone of protection (between at least two sets of current transformers (CT)) is cleared instantaneously (within cycles). Differential protection operates on the principle of comparing currents (and direction of flow) at all terminals of the protected equipment. When current flow becomes unbalanced (e.g., phase-to-phase or phase-to-ground faults), the differential relays are arranged to cause both the primary and the secondary circuit switching devices to trip and lock out through a lockout relay (IEEE Device 86). Typical equipment protected by differential protection covered in this report include:
    - Transformer primary and secondary (tertiary) switchgear supply breakers
    - Generator output leads and neutral
    - Plant or unit differential (unit-connected zone). Zones included:
        - Main generator
        - Generator step-up (main power) transformer(s)
        - Generator switchyard breakers
        - Primary side of the unit auxiliary transformer(s)
- Electrical distribution system (EDS): Overall auxiliary power system that includes both safety systems and non-safety systems necessary to support operation of the nuclear power plant.
- Energetic phase: The initial period of a HEAF associated with the rapid release of energy.
- Ensuing fire: The thermal fire that follows the energetic phase of an arcing fault event.
- Generator circuit breaker (GCB): A circuit breaker that is specifically designed and installed between the main generator and transformer (generator step-up and unit auxiliary transformers). Connection points are at the 17kV to 25kV iso-phase connections. Under certain fault conditions, the GCB separates the generator from the unit-connected design,

which prevents a coasting down generator from feeding a fault. IEEE Standard C37.013 [23] is the reference standard for GCBs.

- Generator fed fault: The decaying fault energy delivered by the main generator after it has tripped (exciter breaker open). The termination is when the generator voltage collapses, and the fault extinguishes (approximately 4 to 15 seconds based on operating experience and literature).
- Generator step-up (GSU) transformer: A transformer specifically used to step up the voltage from a generator (17kV to 25kV) to match the switchyard voltage. The GSU is part of the utility interconnection and is used to export the electricity from the generator to the transmission system. The GSU may also be referred to as the main power transformer (MPT).
- HEAF fault zone: HEAF fault zones are defined within the nuclear power plant electrical distribution system. These fault zones are grouped to identify portions of the EDS with similar ZOI impacts. See Figure 3-1, *HEAF Zones for a simplified NPP electrical distribution system*. HEAF fault zones are based on location within the electrical distribution system and the faulted component. As such, the HEAF fault zones differ from standard electrical distribution zones of protection in some cases.
- High energy arcing fault (HEAF): A fault that results in the rapid release of electrical energy in the form of heat, vaporized metal, and mechanical force. Switchgears, load centers, and bus bars/ducts (440V and above) are subject to this failure mode. Faults of this type are commonly referred to as high energy, energetic, or explosive electrical equipment faults or fires. A HEAF includes the rapid release of energy, over-pressurization, and ignition of localized targets and equipment. HEAFs are indicative of circuit protection failure or non-optimal design resulting in extended duration arcing fault events.
    - For the purpose of classifying events, this is an event that damages and breaches the component of origin. The HEAF is accompanied by an ensuing fire for switchgear and load centers.
    - An ensuing fire is not necessary for a bus duct HEAF; however, hot slag from the explosion in a bus duct may cause a fire below (e.g., secondary ignition).
- Instantaneous overcurrent (IOC) relay (ANSI/IEEE Device 50): This relay is common to switchgear discrete load and cable protection. It is designed for rapid isolation of high energy short-circuit type faults. The IOC relay has no intentional time delay (≤0.5 cycles), and the fault isolation time is primarily based on the speed of the circuit breaker (typically 3 to 5 cycles).
- Iso-phase bus duct (IPBD): A bus duct where the bus bars for each phase are separately enclosed in their own protective housing. The use of iso-phase bus is generally limited to the bus work connecting the main generator to the main transformer. A HEAF in the IPBD is classified as Bin 16.2.
- Load center: A designation commonly used to describe low voltage (≤ 1,000 VAC) switchgear. A HEAF in a load center is classified as Bin 16.a.
- Lockout relay (ANSI/IEEE Device 86): A lockout relay is a protection device that can take multiple inputs and transmit trip signals to circuit breaker(s) to isolate and maintain faulted equipment in a de-energized condition, giving its name “lockout”. A lockout relay may be used to de-energize one piece of equipment (e.g., transformer) or a power lineup in a

protected zone (e.g., generator, transformers, and circuit breakers). A lockout relay must be manually reset by an operator after the fault has been isolated.

- Low voltage: Voltage ranges from 0 – 1,000 VAC [24].
- Main bus bar: In a switchgear/load center, the current carrying conductors that connect the high-side of the load circuit breakers to the low-side of the incoming bus supply circuit breaker(s). When a switchgear supply breaker is closed, it energizes the main bus bars. All load circuit breakers receive their power from the main bus bars.
- Medium voltage: Voltage ranges from over 1,000 VAC to 35,000 VAC [24].
- Non-segregated bus duct (NSBD): a three-phase electrical bus where all of the phase bus bars are in one common metal enclosure with no barrier between phases. It is modular, and when used in electrical distribution systems, it may consist of many segmented runs, including extensions and transitions (e.g., tees, vertical-to-horizontal, 90° turns, etc.). Straight horizontal sections approaching 8 feet and transition points are typically bolted. Note: not all transitions are bolted, some may have bends or are welded. A HEAF in this bus work is classified as either Bin 16.1-1 or Bin 16.1-2 depending on the location within the EDS.
- Non-segmented bus: is a continuous bus (typically enclosed like an NSBD) where the run is sufficiently short enough that no multiple bus sections have to be connected and bolted. Non-segmented bus is typically short runs of bus (typically $\leq$ 8 feet) between switchgear, transformer to switchgear, etc., where the only bolted connections are the origination and termination ends of the non-segmented bus (e.g., from a transformer to the switchgear). Typically, non-segmented buses are of the non-segregated design in nuclear power plants, but not all NSBDs are non-segmented. The reason for this difference is that NSBD is in reference to the type of distribution bus construction and non-segmented bus is a term relative to the HEAF PRA terminology (such as counting transition points for frequency apportionment). Because of these distinctions, the term non-segregated bus and non-segmented bus are not necessarily interchangeable.
- Power circuit breaker: A circuit breaker is mechanical device that automatically interrupts the electrical circuit from either an overload condition or a short-circuit (fault). The automatic operation of power circuit breakers relies on relays with current sensors and trip logic to operate the circuit breaker trip coil. The speed of circuit breaker interruption is commensurate with protecting the electrical rating of the load, cable, circuit breaker, and switchgear. After a fault is cleared, the circuit breaker can be closed to repower the circuit.
- Station auxiliary transformer (SAT): Also referred to as a station transformer (ST), station service transformer (SST), startup transformer (SUT), or reserve auxiliary transformer (RAT). This transformer steps down switchyard offsite power to the voltage levels used by the plant electrical distribution systems. It may feed an intermediate medium-voltage ring bus with an additional transformer. The SAT is not permanently part of the unit-connected design, but typically part of the bus transfer scheme associated with the UAT. The SAT might be a two-winding or three-winding transformer (with secondary and tertiary windings). Some nuclear power plants permanently power Class 1E buses from a pair of SATs with no connection to the unit UATs.
- Switchgear: Medium-voltage (over 1,000 VAC) switching equipment. A HEAF in switchgear is classified as Bin 16.b.

- Switchgear bus “primary cable compartment” or “riser” bus bar: These terms are frequently used by switchgear manufacturers to refer to the switchgear bus work that connects either the circuit breaker to the load (motor or transformer) or supply (UAT or SAT) to the circuit breaker. Generally, they are contained in the rear compartment of each individual switchgear section.
- Switchyard (SWYD): Utility interconnection for the plant. An outdoor area away from the generating station that contains the high voltage circuit breakers, transformers, circuit switchers, disconnects, and bus work along with a dedicated control house with metering, control, and protective relaying.
- Switchyard breaker: High voltage circuit breaker located in the switchyard. These circuit breakers:
    - Connect incoming utility transmission lines
    - Connect the main generator to the utility transmission lines
    - Auxiliary transformers for powering the plant electrical distribution system for startup and offsite power purposes
- Synchronizing check relay (ANSI/IEEE Device 25): Also referred to as sync check relay. This relay allows for the closure of the alternate power supply circuit breaker as long as the residual bus voltage and frequency are within 1.33 V/Hz per ANSI C50.41-2000 [59], to parallel power supplies. If either voltage or frequency (or both) are outside of 1.33 V/Hz the synch check relay will block the close signal to the circuit breaker close coil. This is to limit the possibility of damaging the motor or driven equipment, or both.
- Time overcurrent (TOC) relay (ANSI/IEEE Device 51): This relay is widely used for auxiliary power system equipment protection from overloads, high-impedance faults, and backup protection for selectively coordinated electrical distribution systems. The TOC relay uses an inverse time delay element. That is, the higher the current, the faster the relay trips the circuit breaker(s) to isolate the fault. It is used for discrete loads and switchgear supply breakers. When used for transformers, it may be applied as a TOC relay in the wye ground circuit as a 51N or 51G.
- Transformer (XFMR): A passive electrical device used to step down voltage in an electrical distribution system where power and voltage requirements are less (e.g., load centers, small motors, etc.). Note: a transformer can be used to step-up voltage (such as a generator) to connect with the high voltage switchyard.
- Unit-connected design: Refers to the operational configuration of the (1) main generator, (2) GSU transformer, (3) generator output switchyard breakers, (4) UAT, and (5) associated buses and connections. In the unit-connected design there is no generator circuit breaker and thus no backup circuit breaker(s) to isolate a generator-fed fault if the UAT secondary side breaker failed to open (i.e., stuck) or is slow to open for a fault existing between the generator and GSU transformer or anywhere in the UAT to the first out secondary or tertiary switchgear bus supply circuit breakers. The associated bus and connections include the following:
    - An iso-phase bus that connects the main generator to the low side of the GSU transformer and high side of the UAT.
    - A non-segregated bus that typically connects the UAT low-voltage windings to the first out switchgear bus supply circuit breakers.

  - Higher-voltage connections between the high side of the GSU transformer to the generator output switchyard breakers.

- Unit auxiliary transformer (UAT): This transformer may also be referred to as the auxiliary transformer (AT). This is the transformer that steps down voltage from the main generator to the plant auxiliary power electrical distribution systems during power operation. Unless a generator circuit breaker is installed, it is typically de-energized during shutdown (but may be used in maintenance backfeed operation in limited cases). A unit might employ one, two, or three ATs per main generator. Not all NPPs have an UAT. The UAT is part of the unit-connected design, with the primary side integrated with the iso-phase bus duct system. The UAT can be a two-winding or three-winding transformer (with secondary and tertiary windings). Some NPPs will power Class 1E buses from the UAT during power operation.

- Zone of influence (ZOI): The space surrounding an ignition source where intervening combustibles and targets may be adversely affected by a fire initiated by the ignition source. For HEAFs, the ZOI has two components, an initial energetic phase of the HEAF followed by a post-HEAF ensuing fire for switchgear and load centers. Refer to Section 6 for a more detailed description of the energetic phase and ensuing fire ZOIs.

3
FAULT ZONES AND DURATIONS

This section discusses the concept of the fault zones, transformer electrical protection, and the technical basis for the fault durations of switchgear, load centers, and bus ducts.

3.1 HEAF Zones

Fault zones are developed for portions of the electrical distribution systems (EDS) with similar potential fault durations. Fault zones for a simplified arrangement of nuclear power plant EDS are presented in Figure 3-1, which expands on the concepts presented in EPRI 3002015992 [12].

Starting in Section 3.3, each fault zone is reviewed in detail to determine the range of potential fault durations. These durations are determined based on the common protection elements available in each zone and how they operate. Fault progression event trees summarize the potential fault durations for equipment located within that zone. For completeness, the generic fault progression trees depict the range of end states and include fault durations that lead to HEAF and non-HEAF outcomes. Since the fire ignition frequency only considers events classified as HEAFs, the non-HEAF end states are not considered in the hazard modeling/ZOI development documented in Sections 7 through 9.

Table 3-1 HEAF Zones

HEAF zone	Portion of EDS	Ignition source bin	Equipment
IPBD	Iso-phase bus duct	16.2	Iso-phase bus duct connecting the station generator to the Unit Auxiliary Transformer (UAT) and Generator Step-Up (GSU) transformer.
BDUAT	Bus duct between UAT and Zone 1	16.1-1	NSBD that connects the UAT secondary (tertiary) windings to the first downstream switchgear.
BDSAT	Bus duct between SAT and Zone 1	16.1-1	NSBD that connects the SAT secondary (tertiary) windings to the first downstream switchgear. BDSAT may also be used to represent any offsite power circuit that support power production from dedicated system service transformers not shown in the simplified NPP EDS in Figure 3-1. An example is a dedicated offsite power for cooling tower operation.
1	Medium voltage (MV) switchgear	16.b	First switchgear downstream of the UAT or SAT. This may also be referred to as an “intermediate bus” if it feeds another, downstream medium voltage bus.
2	MV switchgear	16.b	Second switchgear bus downstream of the UAT or SAT (via an intermediate bus).

Table 3-2 HEAF Zones (cont.)

3	Load center	16.a	Load centers or low voltage (LV) switchgear (480 to 1000 VAC)
BD1	MV bus duct between Zone 1 and Zone 2 and Zone 1 and Zone 3	16.1-2	Region of the MV NSBD between the first MV switchgear and either: • The high side of the second MV switchgear bus supply breaker (bus duct from Zone 1 to Zone 2) or, • The high side of the load center transformer (bus duct from Zone 1 to Zone 3)
BD2	MV bus duct between Zone 2 and Zone 3 and Zone 2 to Zone 2	16.1-2	Region of the MV NSBD between the second MV switchgear and either: • The high side of the load center transformer • Another Zone 2 switchgear (bus-tie)
LVBD	LV bus duct between Zone 1, Zone 2 and Zone 3 to Zone 3	16.1-2	Region of the LV NSBD between the Zone 1 step-down transformer and the load center (Zone 1 or Zone 2 to Zone 3) or between load centers (Zone 3 to Zone 3).

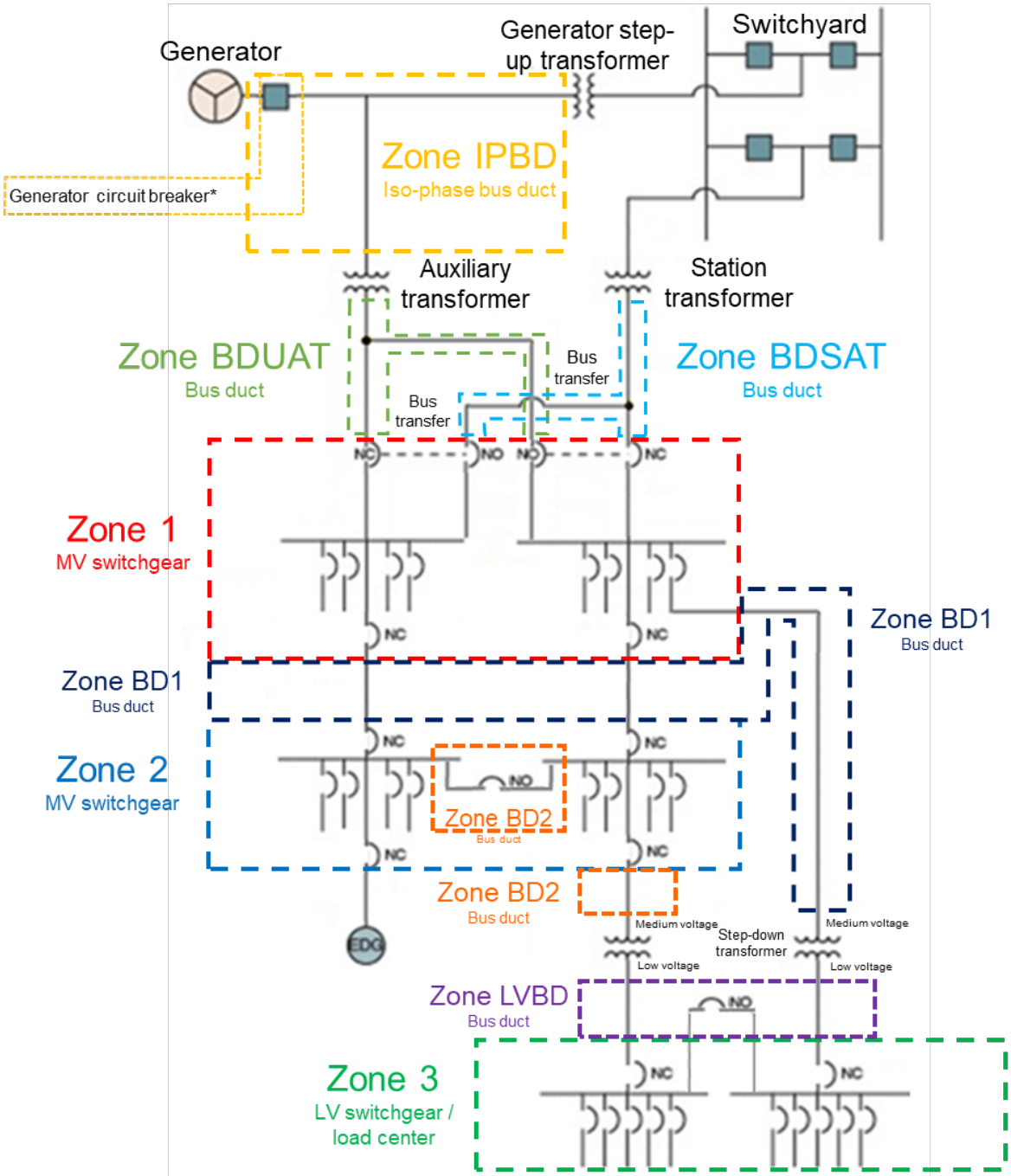

*Generator circuit breaker defined in Section 2 and discussed in Section 5.3.1

Figure 3-1
HEAF Zones for a Simplified NPP Electrical Distribution System

3.2 Transformer Electrical Protection

Transformer electrical protection has a direct bearing on the outcome of energy released during a fault for downstream switchgear and the NSBDs. This is due to the fault clearing time (FCT) setting of the fault sensing relay and the circuit breaker opening time. For this methodology, there are two types of transformer protection schemes considered. The first is termed primary protection (instantaneous) and the second is termed back-up (time-delay).

Primary protection utilizes a protection scheme termed differential, annotated by the relay 87 symbol on electrical drawings. Although it is instantaneous, it has clearly demarcated boundaries of protection which are termed as a “zone” shown in the red shaded portion of Figure 3-2. The protection scheme works on the principle of detecting an internal transformer or first out (Zone 1) switchgear bus supply circuit breaker fault by detecting unbalanced current flow (fault). It accomplishes this task by monitoring all three phases of the primary, secondary, and tertiary (if applicable) currents. Any imbalance in these currents is considered an internal fault within the protection zone and all associated circuit breakers are tripped, locking out the transformer and isolating the fault. The circuit breakers tripped are typically the switchyard and the first out (Zone 1) switchgear bus supply circuit breakers. Faults within this differential protection zone are detected and isolated sufficiently fast enough to prevent escalation to HEAF-type consequences with proper breaker operation. Only faults located within the differential zone of protection can be immediately isolated. Faults outside the differential protection zone are not immediately detectable and require a back-up (or secondary) overcurrent protection scheme to detect and isolate the fault. When a fault occurs outside the zone of differential, or for faults detected by differential but with a stuck switchgear bus supply circuit breaker, back-up protection is relied on to clear the fault.

Back-up (secondary) protection typically refers to the transformer primary side time overcurrent (TOC) relay, annotated by the relay symbol 51 on electrical drawings[1]. This relay works on the principle of limiting through fault current to prevent transformer damage as opposed to instantaneously interrupting a fault (e.g., IEEE Std C57.109 [25]). This protection scheme can detect faults outside the differential zone of protection. However, it is intentionally time-delayed, allowing the lower level protection relays the opportunity to clear the fault first (selective coordination). Instead of detecting unbalanced currents, the 51 relay setting is a combination of current magnitude and duration. The general principle is that the higher the fault current, the faster the relay operates to open the circuit breaker, isolating the fault current. It should be noted that this is not a linear relationship and that inverse-time overcurrent relays are used with various characteristics. This is where the FCT becomes an important parameter in the total energy release and ultimately the ZOI definition.

Transformer back-up protection is required when a Zone 1 switchgear bus supply circuit breaker fails to clear a downstream fault (referred to a “stuck” breaker). Since the fault is outside the transformer differential zone of protection, the fault can only be cleared by the transformer back-up protection. Since the back-up transformer protection is time overcurrent based, the FCT is the key parameter of importance when determining the ZOI. For guidance on how to determine transformer back-up protection clearing times, see Section 6.4.

[1] Although the transformer primary side time overcurrent (51) relay is most commonly used, some stations may have alternate backup protection. Examples include 51G (ground overcurrent), 51N (neutral overcurrent), 59G (ground overcurrent), all of which provide time-delayed protection for sustained phase-to-ground (neutral) transformer faults.

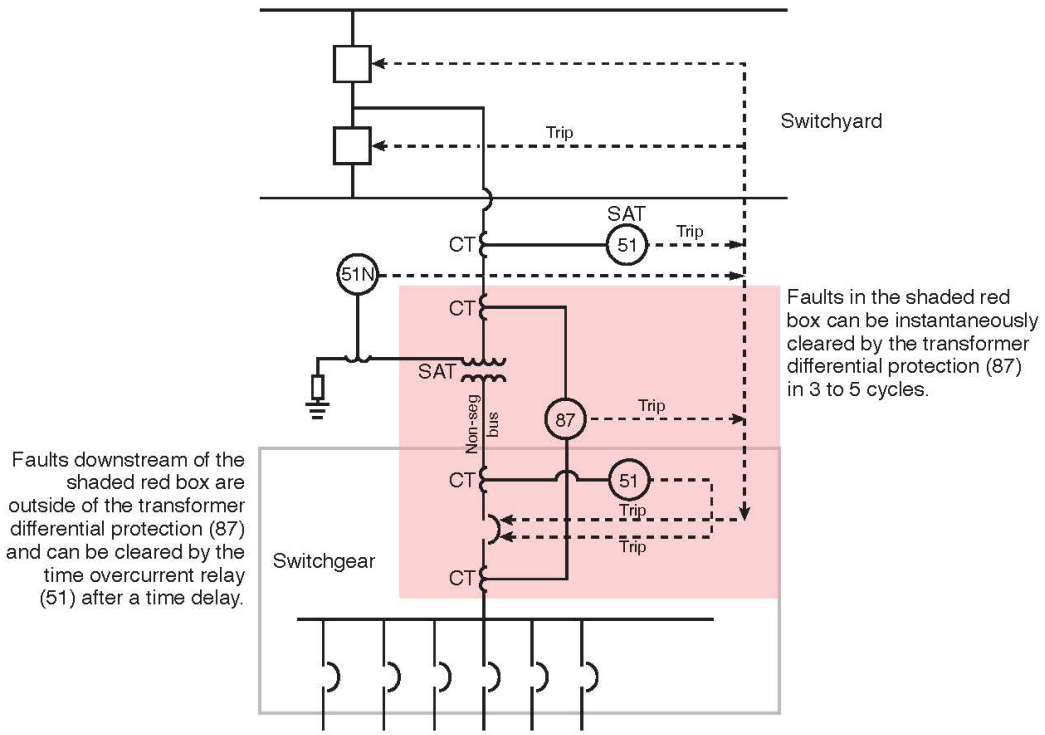

Figure 3-2
SAT Example (Instantaneous Protection Zone Shaded in Red)

3.2.1 Unit Auxiliary Transformer

For the unit auxiliary transformer (UAT) protection, both differential and time overcurrent relays perform the same function when the trip setpoint is reached. In both cases, a trip signal is typically sent to a lockout 86 relay which in turn trips the:

- Main generator
- Opens exciter field circuit breaker
- Opens the switchyard circuit breakers
- Opens UAT secondary and tertiary (if applicable) circuit breakers
- Opens generator circuit breaker (if used)

If the fault is anywhere between the switchgear bus supply circuit breaker differential (87) current transformer (CT) and the load side of the bus supply circuit breaker connection stabs, it is within the transformer differential protection zone (87) and will immediately trip the Zone 1 bus supply circuit breaker, immediately clearing the fault (there is no HEAF). If the Zone 1 switchgear bus supply circuit breaker fails to open and clear the downstream fault (or is the cause of the fault), the main generator cannot be isolated and will continue to feed the fault until the generator field voltage collapses and the arc is extinguished, resulting in a HEAF that can last up to 15 seconds. Similarity for faults originating on NSBD between the UAT and the Zone 1

switchgear (where there is no circuit breaker that can isolate the NSBD from the main generator) a fault will persist as it is fed by the coast-down energy of the main generator until the field voltage collapses. These last two scenarios are termed generator fed faults. Generator fed faults can be prevented and immediately isolated if a generator circuit breaker (GCB) exists between the main generator and the primary side of the UAT as long as the fault is within the differential zone of protection.

For a fault outside the differential zone of protection, there is a specified time delay until the time overcurrent (51) relay setpoint is reached before tripping the main generator and switchyard circuit breakers via the 86 lockout. This time period is referred to as “stiff” since there is no appreciable decay component to the fault and this duration generally falls within the range of 0.2 to 5 seconds (see Figure 3-3 for the FCTs for US NPPs). For EDS switchgear alignments fed by the generator and with a stuck Zone 1 switchgear bus supply circuit breaker, the generator will continue to feed the fault until the generator field collapses resulting in a two-stage fault (i.e., “stiff” followed by a generator fed fault). These type faults can last up to 20 seconds (5 second “stiff” plus an additional 15 second generator fed fault).

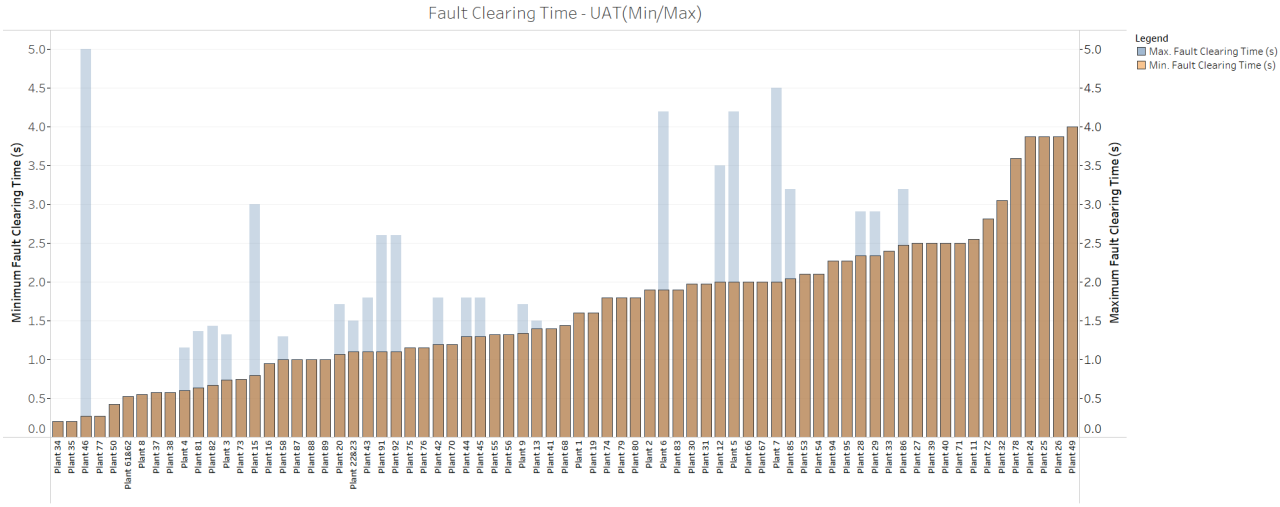

Figure 3-3
UAT TOC Fault Clearing Times

Faults on switchgear fed directly from the UAT can have several outcomes dependent on where the fault location is (within the zone of differential protection or reliant on backup time overcurrent protection) and breaker operation. This is a summary of the most common outcomes:

- Fault detected within the differential protection zone (87) in the NSBD between the UAT and Zone 1 medium voltage switchgear results in a generator fed fault since there is no circuit breaker to isolate the generator from the faulted NSBD. This fault duration can be up to 15 seconds per operating experience.
    - In the operating experience there was an event where a NSBD phase-to-phase fault was immediately detected by differential protection (87), locking out the main generator, but still resulted in a 15 second generator fed HEAF.

- Fault detected between the switchgear bus supply circuit breaker differential (87) current transformer (CT) and the load side of the bus supply circuit breaker connection stabs is within the transformer differential protection zone (87) and the differential protection will immediately trip the Zone 1 bus supply circuit breaker, immediately clearing the fault and preventing a HEAF.
    - Example: Fault located on the Zone 1 bus supply circuit breaker load side connection stabs. Fault is detected by the differential protection (87) relay which immediately trips the Zone 1 bus supply circuit breaker isolating the load side primary disconnect fault from the UAT.
- Fault detected within the differential protection zone (87) with stuck or failed Zone 1 bus supply circuit breaker (fault occurs at the circuit breaker or upstream of the supply breaker). In this case, the stuck or failed Zone 1 bus supply circuit breaker is not able to clear the fault. The UAT protection (87 differential and 86 lockout) is relied upon to trip the main generator. The residual energy from the generator continues to feed the fault until the voltage decays (generator fed fault). This fault duration can be up to 15 seconds.
    - Example: FEDB 112 is one similar case where the fault originated within the 87 differential protection zone with a stuck Zone 1 switchgear bus supply circuit breaker. The UAT and main generator differential protection system immediately actuated and the 86 lock-out tripped the switchyard circuit breakers. The 86 lock-out also sent a trip signal to the switchgear bus supply circuit breaker; however, since the circuit breaker had already failed (stuck closed) due to high resistance of the line side circuit breaker connection stabs, the circuit breaker failed to open and the main generator continued to feed the fault until the field voltage collapsed.
- For a fault detected outside the zone of differential protection (87), with a stuck or failed Zone 1 bus supply circuit breaker, the UAT time overcurrent protection (51) is relied upon to clear the fault. There is a time delay until the TOC setpoint is reached. From a survey of United States NPPs, this range is between 0.2 to 5 seconds (see Figure 3-3). Once this setpoint is reached, the UAT protection (86 lockout) is relied upon to trip the main generator and associated circuit breakers. The residual energy from the generator continues to feed the fault until the voltage decays (generator fed fault). This fault duration has two components; the TOC delay plus the 15 second generator fed fault, respectively.
    - Example: There are no identical events in the operating experience. However, FEDB 51291 is a case where the total fault duration was comprised of a “stiff” fault current followed by a generator fed fault. The fault originated within the NSBD downstream of the UAT; however, due to the UAT (187 relay) differential trip leads isolated from the trip circuit, upstream (backup) protection was required to clear the fault. The sequence of events recorder showed that it took approximately 6 seconds for the backup (387 relay) unit differential protection to detect the fault before tripping the generator and switchyard breakers. By that time, excessive UAT through fault current duration of approximately 6 seconds resulted in a failure of the UAT (and subsequent fire) and the tripped generator continued to feed the fault at the UAT for an unspecified period of time until the generator field voltage collapsed.

3.2.2 Station Auxiliary Transformer

For the Station Auxiliary Transformer (SAT) protection, both differential (primary) and time overcurrent (backup) relays perform the same function when the trip setpoint is reached. The backup protection is primarily intended to protect the SAT from excessive through-fault current durations and at the same time be selectively coordinated with the downstream Zone 1 MV switchgear.

In both cases a trip signal is typically sent to a lockout 86 relay which in turn:

- Opens the switchyard circuit breakers
- Opens SAT secondary and tertiary (if applicable) circuit breakers

Unlike the UAT, there is no post trip generator fed fault to contend with. Therefore, with a differential trip, the fault is isolated in cycles (the fault does not persist long enough to reach the severity of a HEAF). If the fault is outside the differential zone of protection and requires clearing by the time overcurrent (51) relay, the fault duration is dictated by the FCT (the time delay associated with the protective relay setpoint). The FCT is an input used to determine the ZOI for SAT powered switchgear and NSBDs. The range of SAT backup faults clearing times for US NPPs is shown in Figure 3-4.

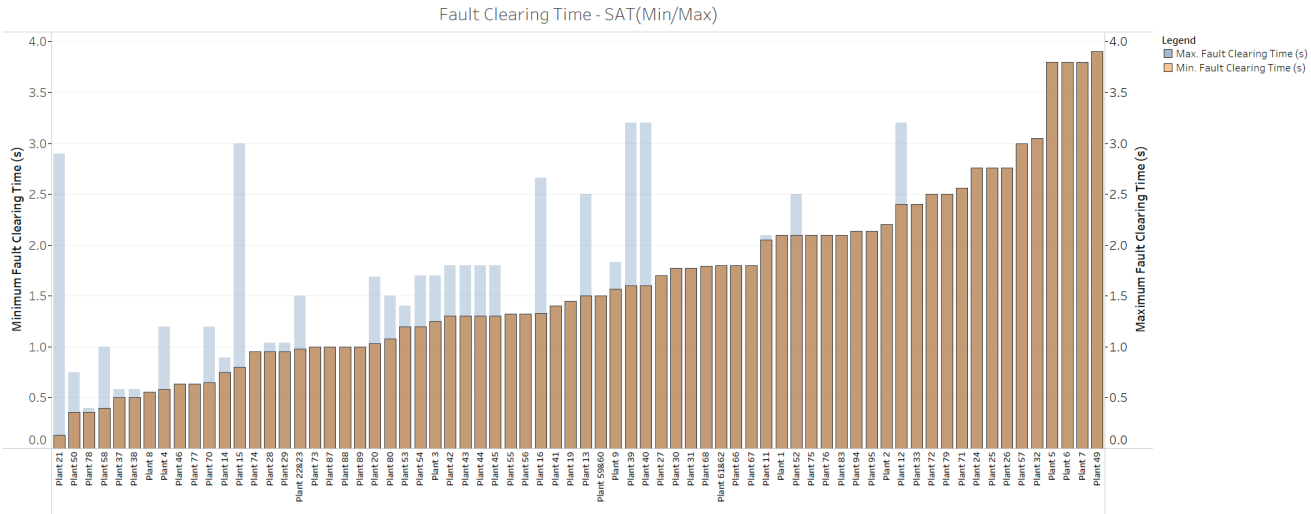

Figure 3-4
SAT TOC Fault Clearing Times

Faults fed directly from the SAT can have several outcomes dependent on the fault location (within the zone of differential protection or reliant on backup time overcurrent protection) and circuit breaker operation. This is a summary of the most common outcomes:

- Fault detected within the differential protection zone (87) in the NSBD between the SAT and Zone 1 medium voltage switchgear is immediately isolated when the SAT primary side switchgear circuit breakers open.
    - FEDB 10584 was a NSBD fault fed by an offsite power transformer that cleared quickly and only had localized damage.

- Fault detected between the switchgear bus supply circuit breaker differential (87) current transformer (CT) and the load side of the bus supply circuit breaker connection stabs is still within the transformer differential protection zone (87) and the differential protection will immediately trip the Zone 1 bus supply circuit breaker, immediately clearing the fault and preventing a HEAF.
    - Example: Fault located on the Zone 1 bus supply circuit breaker load side primary disconnect assembly (connection stab). Fault is detected by the differential protection (87) relay which immediately trips the Zone 1 bus supply circuit breaker isolating the load side primary disconnect fault from the SAT.
- Fault detected within the differential protection zone (87) on the load side of switchgear supply circuit breaker with proper circuit breaker operation results in immediate fault clearing (no HEAF).
    - Example: Fault just upstream of the Zone 1 bus supply circuit breaker. Fault detected by the 87 relay which trips the Zone 1 bus supply circuit breaker and isolates the fault.
- Fault detected within the differential protection zone (87) with stuck or failed Zone 1 bus supply circuit breaker. In this case the stuck or failed Zone 1 bus supply circuit breaker is not able to clear the fault. The SAT backup protection (51 time overcurrent relay and the 86 lockout) is relied upon to trip the switchyard circuit breakers to clear the fault.
    - Example: Fault locations are very specific for this kind of fault. Since the SAT differential protection current transformers (CT) only cover the Zone 1 MV SWGR bus supply circuit breaker up to the load disconnect stabs, the only credible postulated faults are at the circuit breaker primary disconnect stabs or the circuit breaker fails to open on demand (i.e., stuck breaker). In these cases, the upstream SAT transformer backup protection (51 time overcurrent relay and 86 lockout) trips the SAT after a predetermined time delay known as the FCT. The FCT of the SAT defines the HEAF duration.
- For a fault detected outside the zone of differential protection (87), the SAT backup protection (51 time overcurrent relay and 86 lockout) is relied upon to clear the fault, similar to that for a stuck Zone 1 MV switchgear bus supply circuit breaker. There is a pre-set time delay until the time overcurrent (51) relay setpoint is reached. From a survey of United States NPPs, this range is between 0.2 to 5 seconds. Once this setpoint is reached, the SAT protection (86 lockout) is relied upon to open the switchyard circuit breakers to clear the fault.
    - The result is similar to a stuck Zone 1 MV switchgear bus supply circuit breaker, as the same SAT time overcurrent (51) relay is relied on to clear the fault.

3.2.3 Minimum and Maximum Fault Clearing Times for Switchgear Bus Supply Circuit Breakers

The purpose of the MV switchgear bus supply circuit breaker is to provide a switchable connection between a power source (e.g., auxiliary power transformer) and the switchgear's main bus bars that distribute power to the switchgear loads. In many cases there may be more than one switchgear bus supply circuit breaker to allow connection to an alternate power source

should the preferred power source be unavailable. Switchgear bus supply circuit breakers may also be referred to as feeder breakers.

Four NPP plant protection and coordination calculations were reviewed to determine the minimum and maximum fault clearing times for medium voltage switchgear (Zone 1 and Zone 2) bus supply circuit breakers. If there is a second breaker located in Zone 1 to interrupt a Zone 2 fault, that is referred to as the “second breaker in two breaker designs.” This Zone 1 second breaker in two breaker designs primarily benefits the downstream Zone 2 bus (if it has active protection) by providing an additional layer of protection. For Zone 1 faults, this serves as a load branch circuit breaker. If the protection circuitry is disabled (e.g., maintenance switch), it does not have a FCT and is not credited. In several of the cases, the Zone 2 and Zone 1 second breaker have similar settings.

To determine the range of fault clearing times, the following steps were considered/performed:

1. Use station one-line diagrams and/or calculation one-lines to determine the time-current-characteristic (TCC) curves for Zone 1, Zone 2, and Zone 1 second breaker in two breaker designs (if applicable).
2. Obtain available short circuit (ASC) current (either from the calculation or derived from the primary transformer impedance). This is the maximum fault current magnitude given a zero impedance (bolted) fault and is typically dominated by the upstream transformer impedance.
3. Use IEEE 1584-2018 [24] to estimate the corresponding arcing fault current per ASC current.
4. Determine the FCT by finding the point where the arcing fault current intersects the 51 relay time overcurrent curve. Record the FCT along with the arcing fault current magnitude and the associated TCC curve.

Table 3-2 summarizes the minimum and maximum FCTs at four NPPs.

Table 3-3
Minimum and Maximum FCTs for MV Switchgear

Zone	Minimum FCT (seconds)	Maximum FCT (seconds)
1 (bus supply circuit breaker)	0.9	4.3^
1 (2nd breaker in ‘2 breaker designs’)	0.42	2.0
2 (bus supply circuit breaker)	0.29	2.2^

^The FCTs in Sections 8 and 9 use 4 seconds (Zone 1) and 2 seconds (Zone 2), which are the maximum FCTs rounded to the nearest whole number.

3.3 Zone IPBD Faults

Zone IPBD consists of the iso-phase bus duct (IPBD) that connects the main generator to the low voltage side of the generator step-up transformer (GSU) and the primary side of the unit auxiliary transformer (UAT).

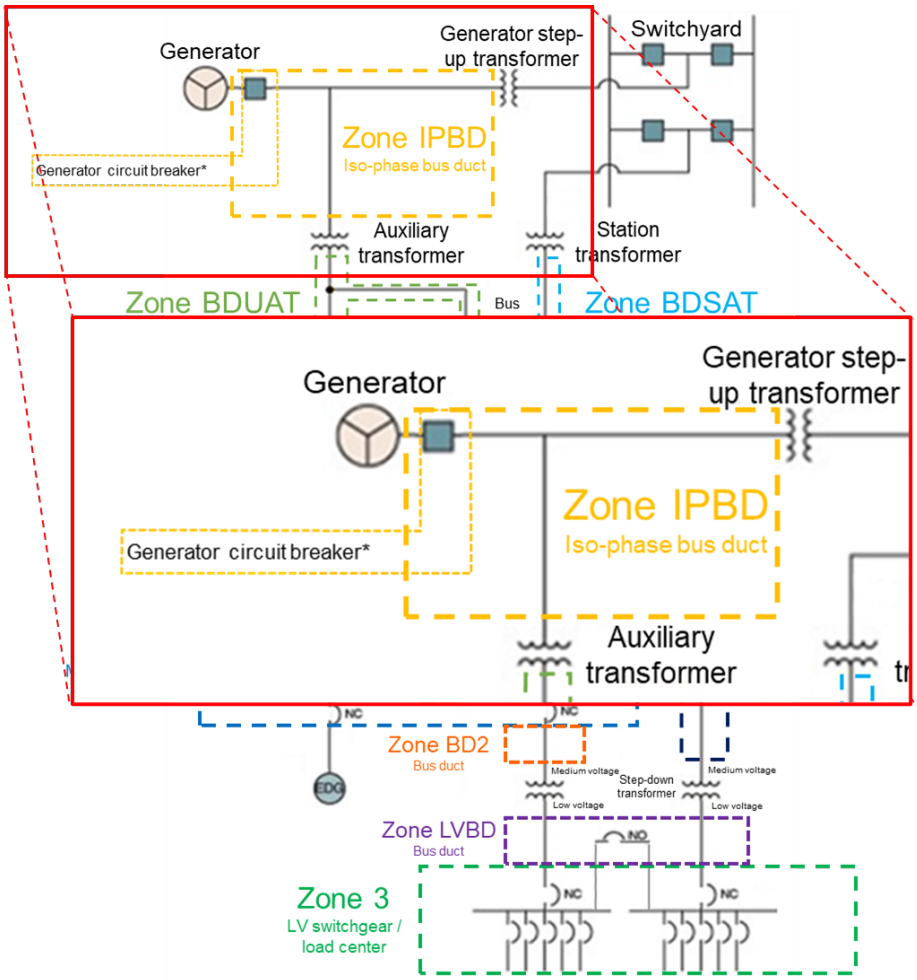

*Generator circuit breaker defined in Section 2 and discussed in Section 5.3.1

Figure 3-5
Zone IPBD: Iso-Phase Bus Duct (Bin 16.2)

The unit-connected design has multiple layers of protection, including overlapping zones of differential protection (87) that activate the generator protection system (lockout (86)), tripping the generator, transformers, and switchyard breakers. The importance of the differential protection system is that it actuates within a few cycles following a fault. The various differential protection schemes include[2]:

- Generator differential protection (87G)*
- GSU (main) transformer differential protection (87MT)

[2] Legend: G = generator, MT = main transformer, U = unit, GT = generator/transformer, 387 = multiple interlocked differential schemes.

- UAT differential protection (87AT)
- Plant or unit differential protection (87U, 87GT, 387)*

  *Plant or unit differential protection zone encompasses (i.e., wrap-around):

  - Main generator (including neutral)
  - GSU (main) transformer
  - UAT primary side iso-phase bus
  - Generator switchyard breakers
  - Generator circuit breaker (if exists)

The entire IPBD is within and protected by the zone of the plant (or unit) differential protection scheme. The IPBD system includes connections to the main generator, GSU, and UAT, (each with their own differential protection zones). Therefore, in many cases, the plant (or unit) differential can be considered a backup, however it is the basis for differential protection during a fault in Zone IPBD.

3.3.1 Zone IPBD Protection Overview and Iso-Phase Bus Rating

For a fault in Zone IPBD, the following protection elements are credited to limit the fault duration:

- Plant or unit (overall) differential protection (87 – Instantaneous), see Section 3.3 and differential protection definition in Section 2.
- Lockout relay (86), see definition in Section 2.
- Breaker-failure protection, see definition in Section 2.
- Iso-phase bus short-time withstand current rating (duration):
  IEEE Standard C37.23-2003 [26], Section 5.4.3 states that the rated short-time withstand current of all isolated-phase bus is the average root mean square (rms) symmetrical current that it can carry for 1 second.

3.3.2 Zone IPBD Fault Progression

Potential fault scenarios in Zone IPBD (unit-connected design) include:

Fault within the unit-connected design (Zone IPBD) is expected to be detected by the plant or unit differential protection (e.g., 87U, 87GT, 387) and result in a generator protection lockout (86), tripping the main generator, GSU transformer, and switchyard breakers.

- The two generator switchyard breakers are expected to clear in several cycles, preventing the grid from back feeding the IPBD fault (through the GSU transformer).
  - Note: Even if one of the generator switchyard breakers were to fail “stuck”, the breaker failure scheme (50BF, 50FD) would clear the adjacent switchyard breakers, typically within 0.2 seconds (12 cycles). See Figure 2-1.
- Even though the generator protection lockout (86) will also trip the generator exciter breaker, the generator residual energy will continue to feed the fault until the decaying generator voltage collapses in approximately 4 to 15 seconds due to the load imposed by the residual arc energy.

Fault within the unit-connected design (Zone IPBD) with failed differential protection (87) or with the differential protection deactivated (i.e., logic inactive) would result in a delayed clearing and subsequent generator fed fault. Back up protection is relied on to clear the fault and could be any one of the following[3]:

- Generator neutral overvoltage (59N), or generator neutral ground (64G)
- Generator instantaneous overcurrent relay (50G)
- Generator distance relay (21)
- Generator negative sequence relay (46)
- Main transformer neutral time overcurrent (51G)
- Main transformer time overcurrent relay (51)

The aggregate of the protection schemes anywhere in Zone IPBD would initiate the generator protection scheme lockout (86), tripping the generator and switchyard breakers typically in under 3 seconds [20]. However, this would delay the start of generator fed fault and the total duration could reach 7 to 18 seconds (3 seconds plus 4 to 15 seconds for the generator fed fault).

Potential fault scenarios in Zone IPBD with generator circuit breakers (GCBs) include:

Fault within the IPBD region (Zone IPBD) with a GCB is expected to be detected by the differential protection (87) tripping the GCB, generator, and switchyard generator circuit breakers in several cycles. If the IPBD fault is between the generator and the GCB, the GCB is still expected to open within several cycles; however, the generator will continue to feed that portion of the IPBD until the field voltage collapses, extinguishing the fault.

Fault within the IPBD region (Zone IPBD) with GCB and “stuck” switchyard circuit breaker is expected to be detected by the differential protection (87) tripping the GCB, generator, and switchyard generator circuit breakers in several cycles. However, if one of the generator switchyard breakers fails to open, “stuck”, then the breaker failure scheme (50FD, 50BF) will actuate within 0.2 seconds (within 12 cycles) and open all adjacent switchyard breakers around the “stuck” breaker (see the breaker failure protection definition in Section 2 and Figure 2-1). The total time is 0.2 seconds.

Fault within the IPBD region (Zone IPBD) with GCB and failed differential protection. It is assumed that one of the other generator protection scheme elements will detect the fault, such as the negative sequence relay (46), and/or generator back up relay (21). Per IEEE Standard C57.109, this backup relaying is generally less sensitive than differential relaying and has some time delay associated with it. Per IEEE Standard C37.013 [23] and C37.06 [27], the GCB short-time rating is 3 seconds. The aggregate of the protection schemes in Zone IPBD (including the negative sequence and distance relaying schemes) would initiate the generator protection scheme, trip the GCB, generator, and switchyard circuit breakers in typically under 3 seconds.

Fault within the IPBD region (Zone IPBD) with GCB “stuck” closed results in a generator fed fault (the same progression as in a unit-connected design). Although the fault would be detected by the differential protection scheme (87) it is postulated that GCB could physically fail to open. Therefore, the generator cannot be isolated from the IPBD fault. The generator residual energy

[3] Legend: N = neutral, G = generator.

will continue to feed the fault until the decaying generator voltage collapses in approximately 4 to 15 seconds.

Note: The two generator switchyard breakers are expected to clear within cycles and prevent the grid from back feeding the IPBD fault (through the GSU transformer).

3.3.3 Zone IPBD Fault Duration Summary

Table 3-3 summarizes the fault scenarios in Zone IPBD.

Table 3-4
Zone IPBD Fault Progression

Zone	Fault description	Duration
IPBD	IPBD fault interrupted by GCB	cycles
IPBD	IPBD fault interrupted by GCB and “stuck” switchyard breaker	≤ 0.2 s
IPBD	IPBD fault interrupted by GCB and failed differential protection	≤ 3 s
IPBD	IPBD fault with GCB “stuck” closed	4 to 15 s
IPBD	IPBD fault with GCB “stuck” closed and failed differential protection	7 to 18 s
IPBD	IPBD fault in unit-connected design	4 to 15 s
IPBD	IPBD fault in unit-connected design with failed differential protection	7 to 18 s

The fault progression tree for Zone IPBD is shown in Figure 3-6. The end states associated with no HEAF consequences are shown in light grey text. For NPPs without generator circuit breakers, the consequence is a generator fed fault (either detected through the differential or backup relaying). For NPPs with a GCB, if the differential protection and GCB operate, there is no HEAF. If the GCB fails to open, the consequence is a generator fed fault.

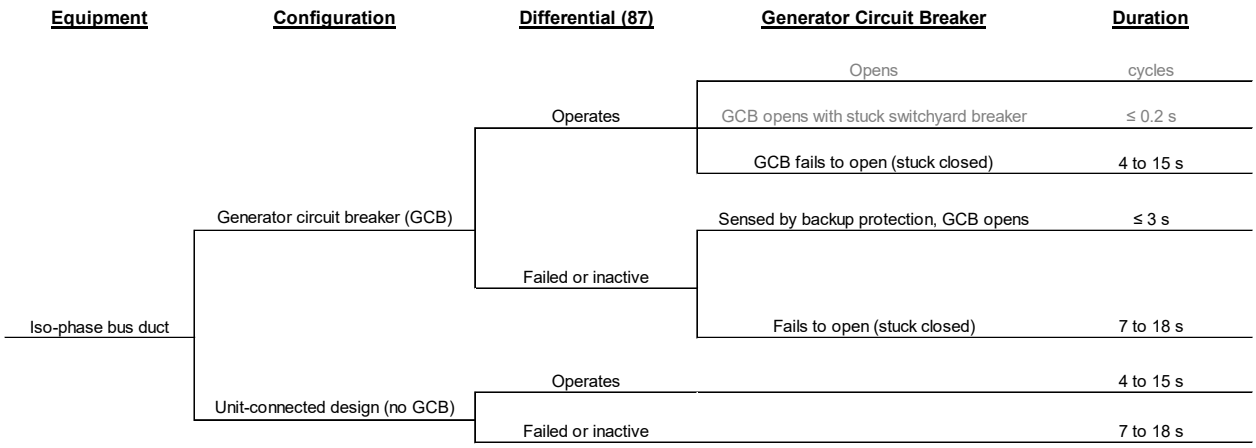

Figure 3-6
Zone IPBD Fault Progression Tree

3.4 Zone BDUAT Faults

Zone BDUAT consists of the non-segregated bus (NSBD) that runs from the secondary/tertiary windings of the unit auxiliary transformer (UAT) to each first level medium voltage switchgear (Zone 1).

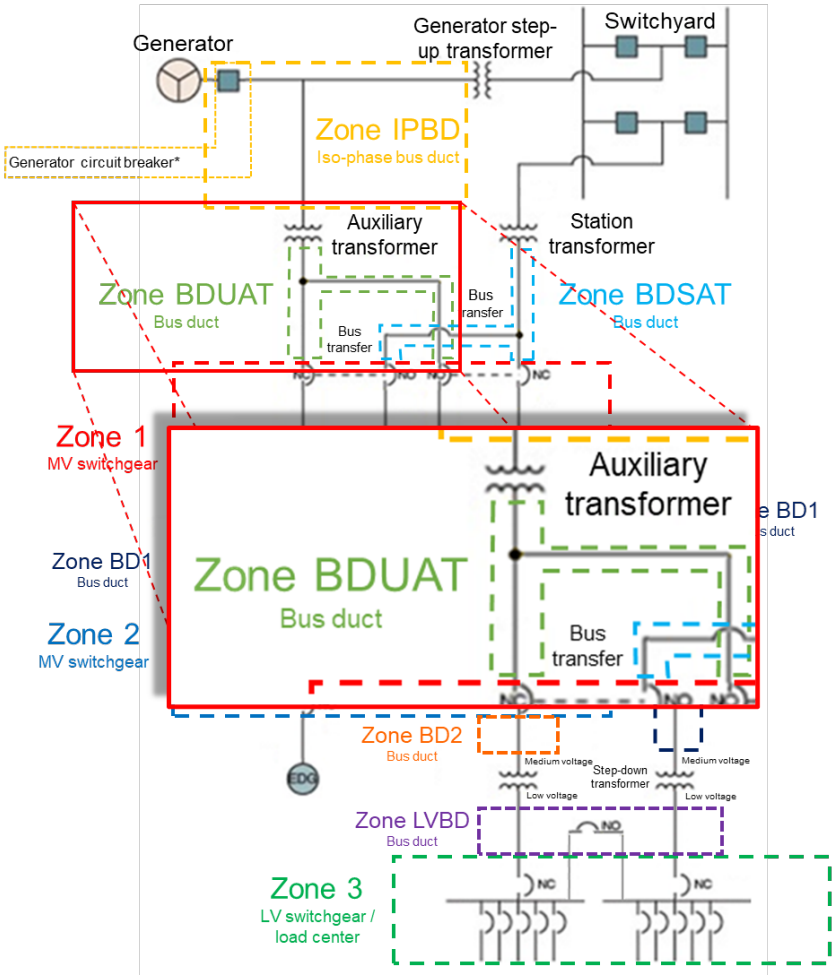

Figure 3-7
Zone BDUAT: Medium Voltage NSBDs (Bin 16.1-1)

The NSBD is within the UAT differential zone of protection (87AT) which is considered the primary protection. Backup protection varies by transformer type. However, in most cases this back up protection consists of some form of time overcurrent protection, whether in-line or wye winding transformer resistance ground overcurrent (51N, 51G). Other protection may consist of a ground detector relay (59) or neutral ground relay (64).

3.4.1 Zone BDUAT Protection Overview and Non-Segregated Bus Rating

For a fault in Zone BDUAT, the following protection elements are credited to limit the fault duration:

- UAT differential protection (87) – instantaneous:
  The UAT protection scheme (87AT) CTs are located such that the entire NSBD is within the zone of protection. For HEAF analysis purposes, this differential protection is considered the primary protection for the NSBD. A fault within the NSBD is expected to actuate the UAT differential protection scheme and initiate a generator protection lockout (86) in a few cycles, tripping the unit and generator switchyard breakers.
- Generator circuit breaker (GCB):
  The GCB is tripped either from the UAT differential (87) protection scheme or UAT timed overcurrent trip, along with generator protection lockout (86), unit trip, and tripping of the generator switchyard circuit breakers.
- Lockout relay (86): see definition in Section 2.
- Breaker-failure protection: see definition in Section 2.
- Non-segregated bus short-time withstand rating (duration): IEEE C37.23-2003 [26], Section 5.4.3 states that the rated short-time withstand current of metal-enclosed bus is the average rms symmetrical current that it can carry for 2 seconds for non-segregated-phase bus with a rated maximum voltage greater than 0.635 kVAC. However, NSBD design that exceeds this 2 second requirement is possible when specified.

3.4.2 Zone BDUAT Fault Progression

Potential faults in Zone BDUAT for plants with GCBs include:

Fault in Zone BDUAT with a GCB is expected to be detected by the UAT differential protection (87) scheme. The UAT will lockout (86) and initiate a generator protection trip, tripping the unit and generator switchyard circuit breakers. The event progression is expected to be accomplished in several cycles upon fault detection.

Fault in Zone BDUAT with GCB and “stuck” switchyard breaker is expected to be detected by the UAT differential protection (87) scheme. The UAT will lockout (86) and initiate a generator protection trip (within several cycles). The generator lockout will trip the unit and send trip signals to the two generator switchyard circuit breakers.

However, if one of the generator switchyard breakers fails to open “stuck”, then the breaker failure scheme (50FD, 50BF) will actuate within 0.2 seconds (within 12 cycles) and open all adjacent switchyard circuit breakers around the “stuck” breaker (see Figure 2-1). Total time is within 0.2 seconds.

Fault in Zone BDUAT with GCB and failed UAT differential protection or protection logic inactive is detected by the next level of protection (e.g., the UAT time overcurrent relaying (51, 51N, 51G), ground detector relay (59) or neutral ground (64) relay).

This transformer second level protection’s primary purpose is to protect the auxiliary transformer from excessive through-fault-current durations that could damage the transformer. Per IEEE Standard C57.109 [25], a review of FCTs in Figure 3-3, and IEEE paper [29], this time delay can range from 0.2 to 5 seconds. This UAT second level of protection is expected to trip via generator lockout (86). Plant specific timing may differ, and plant protection and coordination calculations should be reviewed for expected UAT tripping times (see Section 6.4).

Fault in Zone BDUAT with GCB "stuck" closed results in a generator fed fault. Although the fault would be detected by UAT differential protection (87AT) tripped the generator and switchyard circuit breaker, it is postulated that GCB could physically fail to open. Therefore, the generator cannot be isolated from the UAT and the non-segregated bus. Even though the generator protection lockout (86) will also trip the generator exciter breaker, the generator residual energy will continue to feed the fault until the decaying generator voltage collapses in approximately 4 to 15 seconds.

> Note: The two generator switchyard circuit breakers are also expected to clear in several cycles due to the 86 lockout, preventing the grid from back feeding the NSBD fault (through the GSU and UAT).

Potential faults in Zone BDUAT for plant designs without GCBs (unit-connected design) include:

Fault in Zone BDUAT in a unit-connected design: A fault initiated in Zone BDUAT is expected to be detected by the UAT differential protection (87AT) and result in a generator protection lockout (86), tripping the main generator, GSU transformer, and switchyard circuit breakers.

- The two generator switchyard breakers are expected to clear in cycles, preventing the grid from back feeding the non-segregated bus duct HEAF (through the GSU and UAT transformers).
    - Note: Even if one of the generator switchyard circuit breakers were to fail "stuck" closed, the breaker failure scheme (50BF, 50FD) would typically clear the adjacent switchyard breakers in under 0.2 seconds
- Even though the generator protection lockout (86) will also trip the generator exciter circuit breaker, the generator residual energy will continue to feed the fault until the decaying generator voltage collapses in approximately 4 to 15 seconds.

Fault in Zone BDUAT in a unit-connected design with failed UAT differential protection (87AT) or protection logic inactive results in a delayed clearing and a generator fed fault. Back up protection is then relied on to clear the fault and may be any one of the following:

- UAT primary side time overcurrent (51) relay
- UAT neutral overcurrent (51N, 51G) relay
- UAT ground fault detector (59N) relay
- UAT neutral ground (64) relay

This transformer second level protection's primary purpose is to protect the auxiliary transformer from excessive through-fault-current durations that could damage the transformer. Per IEEE Standard C57.109 [25], a review of fault clearing times in Figure 3-3, and IEEE paper [29], this time delay can range from 0.2 to 5 seconds. This UAT second level of protection would be expected to trip via generator lockout (86). However, this delay in generator protection lockout (86) would also delay the start of a potential generator fed fault. Generator fed faults have been documented to range from 4 to 15 seconds. Therefore, the total event duration (until the fault is extinguished) could range from 4.2 to 20 seconds (0.2 to 5 seconds for second level of transformer protection followed by 4 to 15 seconds of generator fed fault).

> Operating experience note: An actual HEAF occurred where the UAT differential (87) protection was inadvertently left disabled. The event duration was close to the range postulated above. A distinguishing difference between the actual event and the idealized accident sequence described above is that the UAT transformer failed, with the failure

picked up by the plant's unit differential (387) protection scheme (that is, the UAT primary CTs were within the zone of the unit differential (387) protection and initiated the generator protection lockout (86) in approximately 6 seconds. The generator likely fed the UAT fault until the voltage collapsed; however, no duration was documented.

3.4.3 Zone BDUAT Fault Duration Summary

Table 3-4 summarizes the faults in Zone BDUAT.

Table 3-5
Zone BDUAT Fault Progression

Zone	Fault Description	Duration
BDUAT	NSBD fault with GCB opening	cycles
BDUAT	NSBD fault with GCB and "stuck" switchyard breaker	≤ 0.2 s
BDUAT	NSBD fault with GCB and failed UAT differential protection	0.2 to 5 s
BDUAT	NSBD fault with GCB "stuck" closed	4 to 15 s
BDUAT	NSBD fault with GCB "stuck" closed and failed UAT differential protection	4.2 to 20 s
BDUAT	NSBD fault (unit-connected design)	4 to 15 s
BDUAT	NSBD fault with failed UAT differential protection (87AT) (unit-connected design)	4.2 to 20 s

A fault in Zone BDUAT is expected to result in an UAT protective trip (86) lockout and subsequent turbine-generator trip. Similar to Zone IPBD, there is potential for the main generator to feed the fault during the generator coast-down. The fault progression tree is shown in Figure 3-8. End states associated with successful protection and not capable of producing a fault duration sufficient to result in HEAF-type consequences are shown in light grey text. Successful operation of the GCB within the zone of protection will not result in HEAF-like consequences. The remaining progressions (with the exception of the backup protection for the GCB operation) results in a generator fed fault.

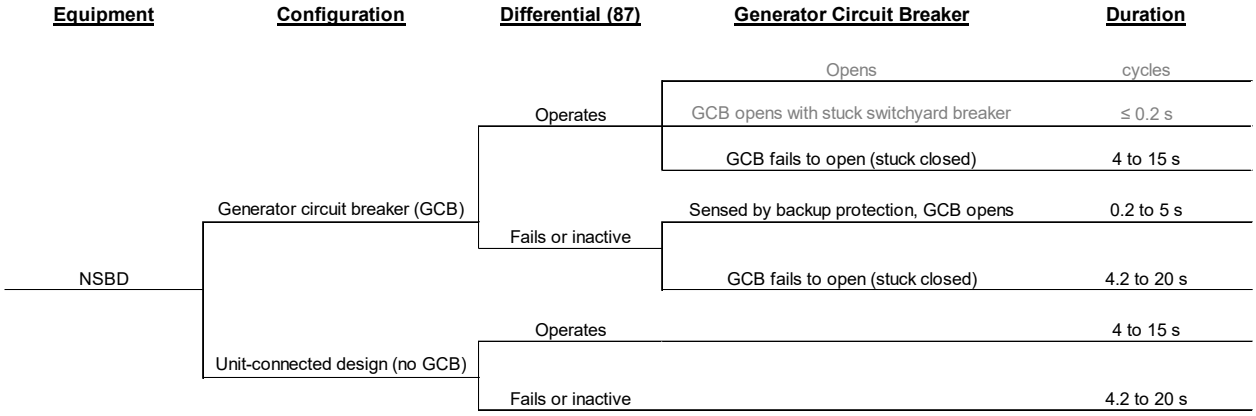

Figure 3-8
Zone BDUAT Fault Progression Tree

3.5 Zone BDSAT Faults

Zone BDSAT consists of the non-segregated bus (NSBD) that runs from the secondary/tertiary windings of the station auxiliary transformer (SAT) to each first level medium voltage switchgear (Zone 1).

Also, as described in Table 3-1, BDSAT may also be used to represent any offsite power circuit that support power production from dedicated system service transformers not shown in the simplified NPP EDS in Figure 3-1.

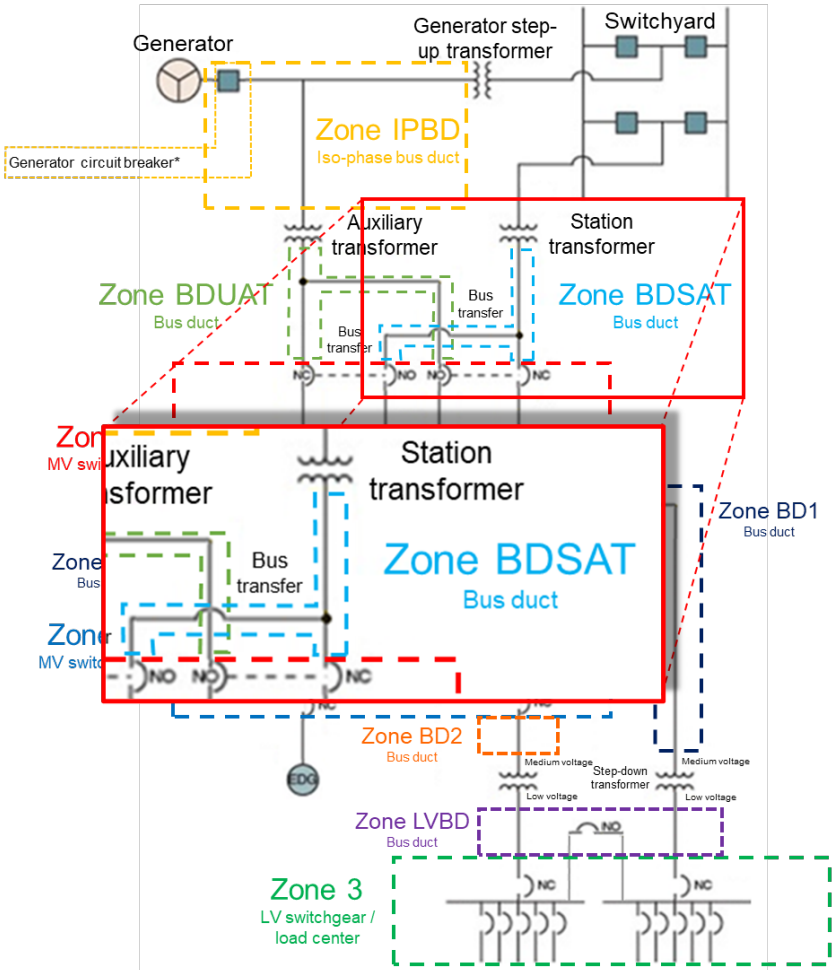

Figure 3-9
Zone BDSAT: Medium Voltage NSBDs (Bin 16.1-1)

Zone BDSAT is wholly contained within the SAT differential zone of protection (87ST, 87R, etc.) which is considered the primary protection. Backup protection varies by transformer type. However, in most cases this back up protection consists of some form of time overcurrent protection, whether in-line or wye winding transformer resistance ground overcurrent (e.g., 51N, 51G). Other protection may consist of a ground detector relay (59) or neutral ground relay (64).

3.5.1 Zone BDSAT Protection Overview and Non-Segregated Bus Rating

For a fault in Zone BDSAT, the following protection elements are credited to limit the fault duration:

- SAT differential protection (87) – instantaneous: The SAT protection scheme (87) CTs are located such that the entire NSBD is within the zone of protection. For HEAF analysis purposes, this differential protection is considered the primary protection for the NSBD. A fault in the NSBD is expected to actuate the SAT differential protection (87) scheme and initiate a lockout (86) tripping the SAT switchyard breakers (and any dedicated SAT breaker) within a few cycles.

- Lockout relay (86): see definition in Section 2.

- Breaker-failure protection: see definition in Section 2.

- Non-segregated bus short-time withstand rating (duration): IEEE C37.23-2003 [26], Section 5.4.3 states that the rated short-time withstand current of metal-enclosed bus is the average rms symmetrical current that it can carry for a period of 2 seconds for non-segregated-phase bus with a rated maximum voltage greater than 0.635 kVAC. However, NSBD designs that exceeds this requirement are possible when specified.

3.5.2 Zone BDSAT Fault Progression

Potential faults in Zone BDSAT include:

Fault in Zone BDSAT with active differential protection and switchyard circuit breakers is expected to be detected by the SAT differential protection (87) scheme. The SAT will lockout (86) and initiate a trip of the SAT switchyard circuit breakers (and any dedicated SAT circuit breaker) within a few cycles.

Fault in Zone BDSAT with active differential protection and failed SAT switchyard circuit breaker is expected to be detected by the SAT differential protection (87) scheme. The SAT will initiate a lockout (86) trip signal to the SAT transformer switchyard breakers (and any dedicated SAT breaker). In the event one of the switchyard circuit breakers fails to open “stuck”, the breaker failure scheme (50FD, 50BF) will activate and clear all adjacent circuit breakers around the stuck breaker within 0.2 seconds (within 12 cycles). See Figure 2-1.

Fault in Zone BDSAT with failed differential protection or protection logic inactive is expected to be detected by the next level of protection (e.g., the SAT time overcurrent relaying (51, 51N, 51G), ground detector relay (59) or neutral ground (64) relay.

This transformer next level of protection’s primary purpose is to protect the transformer from excessive through-fault-current durations that could damage the transformer. Per IEEE Standard C57.109 [25], a review of fault clearing times in Figure 3-4, and a review of an IEEE paper [29], it is observed that this time delay generally ranges from 0.2 to 5 seconds. The SAT time overcurrent protection would be expected to trip (via lockout (86)) the SAT switchyard circuit breakers (and any dedicated SAT breaker) within this fault clearing time (typical range of 0.2 to 5 seconds). The timing of the backup relaying may differ, and protection and coordination calculations should be reviewed for actual SAT tripping times. See Section 6.4.

3.5.3 Zone BDSAT Fault Duration Summary

Table 3-5 summarizes the faults in Zone BDSAT.

Table 3-6
Zone BDSAT Fault Progression

Zone	Fault description	Duration
BDSAT	NSBD fault with active differential protection and switchyard breakers	cycles
BDSAT	NSBD fault with active differential protection and failed SAT switchyard breaker	≤ 0.2 s
BDSAT	NSBD fault with failed differential protection	0.2 to 5 s

The fault durations in Zone BDSAT are presented in Figure 3-10. The end states with successful protection and not capable of resulting in HEAF-level consequences are shown in light grey text.

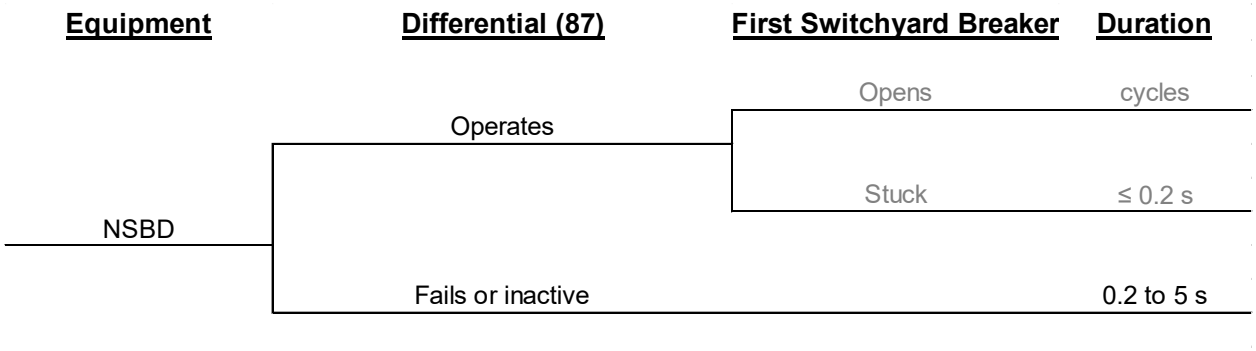

Figure 3-10
Zone BDSAT Fault Progression Tree

3.6 MV Switchgear Zone 1 Faults

Zone 1 includes the first medium voltage switchgear downstream of either the UAT or SAT. Within the medium voltage switchgear, a fault can develop in either the switchgear supply side (including the incoming circuit breaker), the main bus bar, or the load cubicle. The protection elements and durations can differ based on the location within the switchgear.

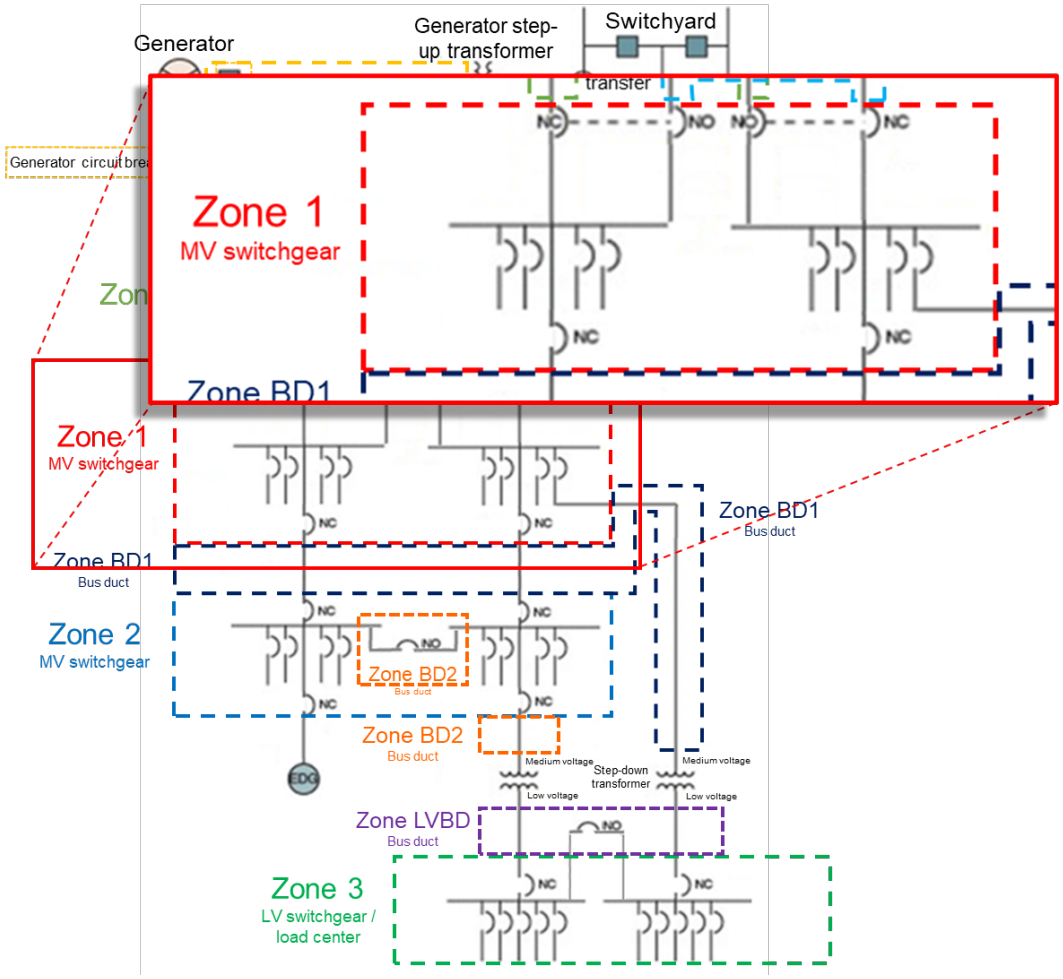

Figure 3-11
Zone 1: Medium Voltage Switchgear (Bin 16.b)

The following three locations are shown in Figure 3-12 and summarized below:

1. Supply side of switchgear bus supply circuit breaker, including circuit breaker connection stabs to the switchgear, differential protection (87) and time overcurrent relay CT, and primary compartment bus work (see lower half of the red box in Figure 3-12 as an example).
2. Main bus bars, including the bus-work connecting the main bus to each switchgear circuit breaker cubicle interface connection, outside the zone of the transformer differential protection (87) CTs (see green box in Figure 3-12).
3. Load circuit breaker and load side bus work or load cabling (see blue box in Figure 3-12).

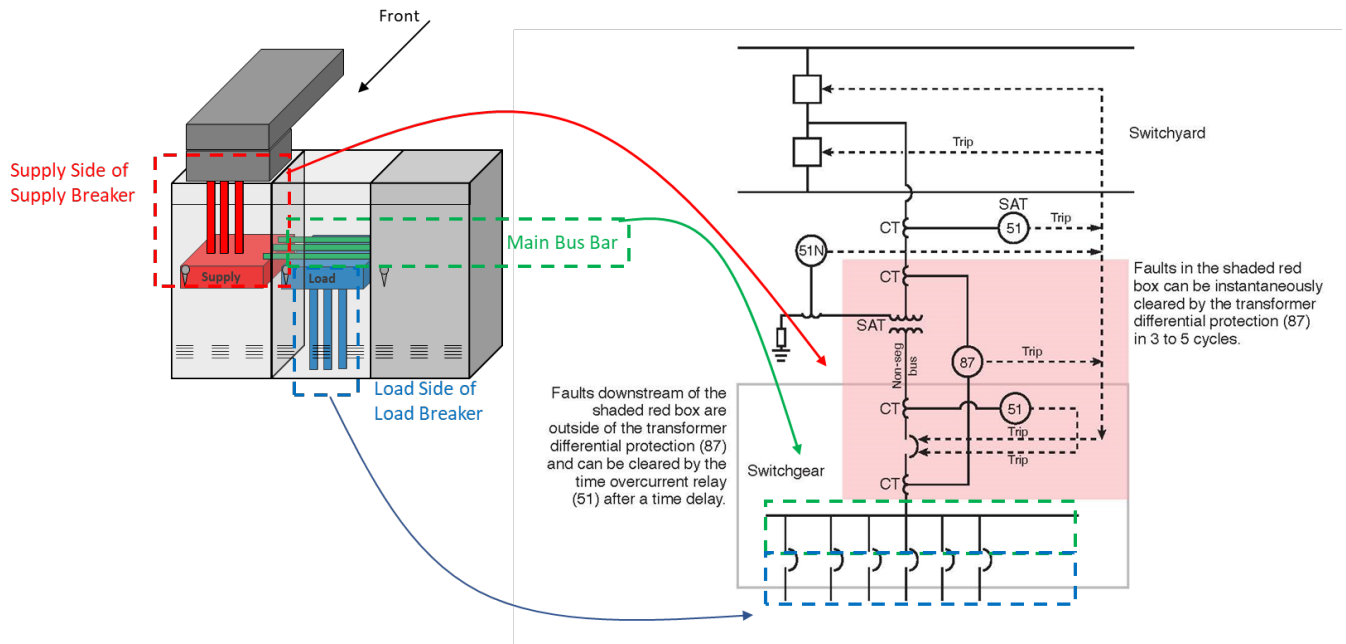

Figure 3-12
MV Switchgear Fault Locations

3.6.1 Zone 1 Protection Overview

For a fault in Zone 1, the following protection elements are credited to limit the fault duration:

- <u>Bus protection time overcurrent (51) – delay:</u> The switchgear time overcurrent (51) protection relay CTs are located within the physical zone where the incoming transformer power supply connects to the switchgear bus supply breaker. The CTs may either be part of the circuit breaker connection stabs (e.g., horizontal draw-out) or on the primary cable compartment bus in the rear of the switchgear (e.g., vertical lift style – see CT shown in Figure 3-13).

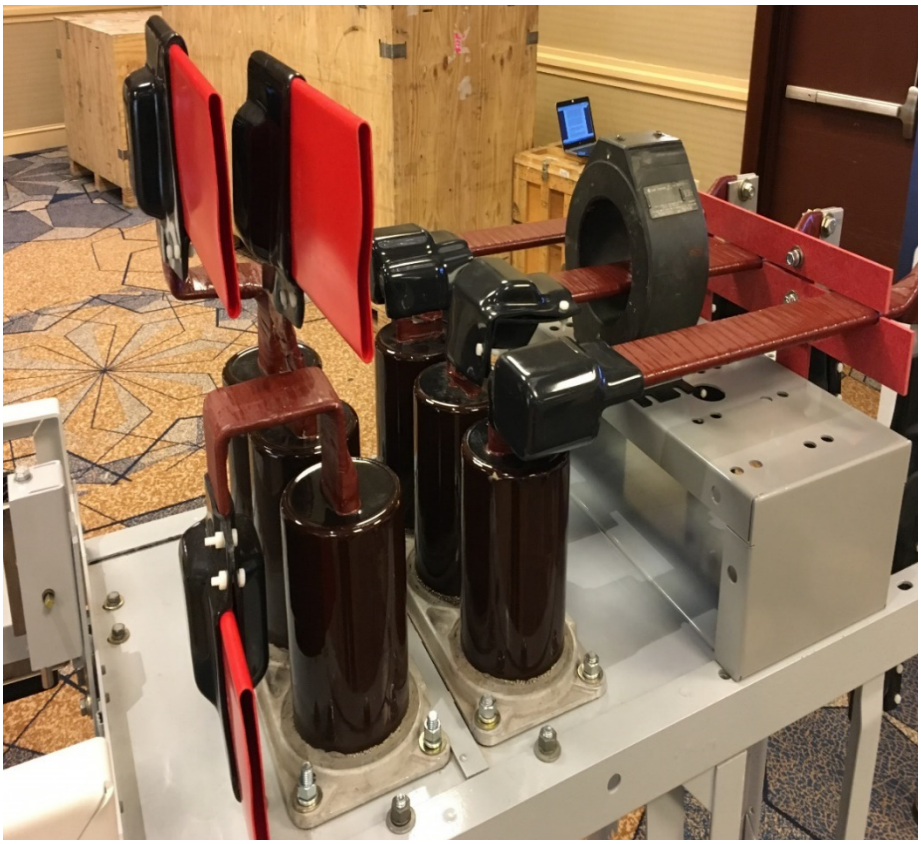

Figure 3-13
"Primary Cable Compartment" Bus and Overcurrent CT (51) for Incoming Supply (Vertical Lift Circuit Breaker)

- Transformer protection (87 – instantaneous): The UAT and SAT differential protection scheme (87) is considered the primary protection for UAT/SAT faults (including NSBD and switchgear bus supply circuit breakers) and is designed to interrupt any fault in this protection zone within several cycles.

  The UAT CTs used with this protection scheme are located as follows:

  1. The transformer primary (high voltage side)
  2. Downstream (load side) of the Zone 1 switchgear bus supply breaker(s) at the breaker stabs that connect the breaker to the main bus bars. The bus supply breakers are within the zone of UAT/SAT differential (87) protection (see Figure 3-12).

  Since the Zone 1 switchgear bus supply circuit breaker(s) are part of the active UAT/SAT differential (87) protection scheme, the bus supply circuit breakers will trip for incoming power supply faults inside the switchgear up to the breaker stabs (all six stabs) and also lockout (86) the UAT/SAT. An exception is if the switchgear bus supply breaker and/or switchgear cubicle/breaker stabs interface connections failed in such a manner that the circuit breaker is damaged and cannot open to clear the fault.

- Lockout relay (86), see definition in Section 2.

- Breaker-failure protection, see definition in Section 2.

3.6.2 Zone 1 Supply Side Fault Progression

Potential faults in Zone 1 (supply side) are discussed below:

The Zone 1 switchgear supply side includes the switchgear bus supply circuit breaker, which includes the circuit breaker connection stabs to the switchgear, the differential protection (87) with the time overcurrent (51) CTs, and the primary compartment bus work (see Figure 3-12).

Zone 1 supply side: switchgear bus supply circuit breaker: is within the zone of transformer differential protection (87) scheme up to and including the load side primary disconnect stabs. A Zone 1 supply side fault on the incoming bus-work is upstream of the switchgear supply circuit breaker, and the bus supply circuit breaker is ineffective at clearing an upstream fault and is the primary basis for the differential protection (i.e., trip of the auxiliary transformer to clear a Zone 1 switchgear fault upstream of the bus supply circuit breaker).

For faults on the load side of the switchgear bus supply circuit breaker (but upstream of the differential protection (87) CT (i.e., load side of the switchgear bus supply circuit breaker connection stabs)), the circuit breaker will open in a few cycles to clear the fault as part of the differential protection trip sequence. Even if the Zone 1 switchgear bus supply circuit breaker is collaterally damaged by the fault at the load side circuit breaker stabs (where the differential protection (87) CTs are located), the fault will still be detected by the differential protection (87) scheme resulting in a trip and lockout of the upstream transformer within a few cycles.

A Zone 1 supply side fault with failed “stuck” bus switchgear supply breaker can have different outcomes. This is dependent on whether the switchgear is fed from:

- Generator/UAT with a GCB
- Generator/UAT without a GCB
- Offsite/SAT

Zone 1 supply side via generator/UAT with a GCB

Zone 1 supply side fault fed from the UAT via GCB with “stuck” switchgear bus supply breaker is within the zone of the UAT differential (87) protection scheme. The fault can be sensed by the switchgear bus supply time overcurrent (51) relay; however, due to the speed of the UAT differential protection, the fault is expected to clear in several cycles as the UAT differential protection is expected to initiate the generator protection lockout (86) scheme, tripping the:

- Generator circuit breaker
- Generator switchyard breakers (to prevent switchyard from back feeding the fault)
- Unit trip

Zone 1 supply side fault fed from the UAT with “stuck” GCB and “stuck” switchgear bus supply breaker will progress to a generator fed fault. This progression has two failures; the switchgear supply breaker and the GCB failed “stuck” closed (independent failure). The fault is detected by the UAT differential protection (87) scheme and initiates a generator protection lockout (86). The main generator switchyard circuit breakers will open in cycles and isolate the switchyard/grid from feeding the fault. However, since the main generator cannot be isolated from the UAT/switchgear (i.e., GCB “stuck” closed), the energy can flow through the two stuck breakers and feed the fault for an estimated 4 to 15 seconds during generator coast-down.

Zone 1 supply side fault fed from the UAT via GCB with failed (or inactive) UAT differential (87) protection is expected to be detected by the next level of protection (e.g., the UAT time overcurrent relaying (51, 51N, 51G), ground fault detector (59), or neutral ground (64) relay) and trip the GCB as part of the UAT and generator protection scheme.

This transformer second level protection's primary purpose is to protect the transformer from excessive through-fault-current durations that could damage the transformer. Per IEEE Standard C57.109 [25], a review of fault clearing times in Figure 3-3, and IEEE paper [29], this time delay can range from 0.2 to 5 seconds. The UAT second level of protection is expected to trip the generator protection lockout (86), including the GCB. The only benefit gained by the GCB is the added reliability by introducing an additional layer of protection. It does not offer instantaneous clearing, like the differential protection, it must wait for the backup-time overcurrent relay to sense the fault and initiate the trip command.

Zone 1 supply side fault fed from UAT with "stuck" GCB and failed (or inactive) UAT differential (87) protection) will see a delayed clearing time and a generator fed fault. This progression has two failures: the switchgear bus supply breaker and the GCB failed "stuck" closed (independent failure). The second level of transformer protection is relied on to clear the fault and may be any one of the following:

- UAT primary side time overcurrent (51) relay
- UAT neutral overcurrent (51N, 51G) relay
- UAT ground fault detector (59N) relay
- UAT neutral ground (64) relay

This transformer secondary protection's primary purpose is to protect the transformer from excessive through-fault-current durations that could damage the transformer. Per IEEE Standard C57.109 [25], a review of fault clearing times in Figure 3-3, and IEEE paper [29], this time delay can range from 0.2 to 5 seconds. The UAT time overcurrent protection is expected to trip (via generator protection (86 lockout)):

- Generator switchyard circuit breakers (to prevent switchyard from back feeding the fault)
- Reactor and/or turbine

However, this delay in generator protection lockout (86) also delays the start of the generator fed fault. Generator fed faults have been documented to range from 4 to 15 seconds.

Therefore, the total event duration (until the HEAF is extinguished) could range from 4.2 to 20 seconds (0.2 to 5 seconds for second level of transformer protection followed by 4 to 15 seconds of generator fed fault).

Zone 1 supply side via Generator/UAT without a GCB (unit-connected design)

Zone 1 supply side fault fed from UAT in a unit-connected design with "stuck" switchgear bus supply breaker is expected to develop into a generator fed fault. The fault is detected by the UAT differential protection scheme (87) initiating a generator lockout (86). The main generator switchyard circuit breakers will open in cycles and isolate the switchyard/grid from feeding the fault. However, since the main generator cannot be isolated from the UAT/switchgear, the generator coast down energy can continue to feed the fault for an estimated 4 to 15 seconds.

Zone 1 supply side fault fed from UAT in a unit-connected design with failed (or inactive) UAT differential protection (87AT) results in a delayed clearing followed by the susceptibility to a generator fed fault. The second level of transformer protection is relied upon to clear the fault and may be any one of the following:

- UAT primary side time overcurrent (51) relay
- UAT neutral overcurrent (51N, 51G) relay
- UAT ground fault detector (59N) relay
- UAT neutral ground (64) relay

This transformer secondary protection's primary purpose is to protect the transformer from excessive through-fault-current durations that could damage the transformer. Per IEEE Standard C57.109 [25], a review of fault clearing times in Figure 3-3, and IEEE paper [29], this time delay can range from 0.2 to 5 seconds. The UAT time overcurrent protection would be expected to trip (via generator protection (86 lockout)):

- Generator switchyard breakers (to prevent switchyard from back feeding the fault)
- Reactor and/or turbine trip

However, this delay in generator protection lockout (86) also delays the start the generator fed fault. Generator fed faults have been documented to range from 4 to 15 seconds.

Therefore, the total event duration (until the HEAF is extinguished) could range from 4.2 to 20 seconds (0.2 to 5 seconds for the second level of transformer protection followed by 4 to 15 seconds of generator fed fault).

Zone 1 supply side via offsite/SAT

<u>Zone 1 supply side fault fed via offsite/SAT</u> is within zone of the SAT differential (87) protection scheme. The fault would also be sensed by the switchgear bus supply time overcurrent (51) relay; however, due to the speed of the SAT differential protection, the fault is expected to clear in cycles as the SAT differential protection would trip the switchyard primary side switchyard circuit breakers (including SAT breaker if it exists) and de-energize the SAT.

<u>Zone 1 supply side fault fed via offsite/SAT with a "stuck" switchgear bus supply circuit breaker</u> is within the zone of the SAT differential (87) protection scheme. The fault would also be sensed by the switchgear bus supply time overcurrent (51) relay; however, due to the speed of the SAT differential protection, the fault is expected to clear in several cycles as the SAT differential protection is expected to initiate the generator protection lockout (86) scheme, tripping the:

- Generator switchyard breakers (to prevent switchyard from back feeding the fault)
- Reactor and/or turbine trip

<u>Zone 1 supply side fault fed via offsite/SAT with "stuck" switchyard circuit breaker</u> is within the zone of the SAT differential (87) protection scheme. The fault would be sensed by the switchgear bus supply time overcurrent (51) relay; however, due to the speed of the SAT differential protection scheme (87), an instantaneous trip signal to the transformer primary switchyard circuit breakers (and/or dedicated SAT breaker) would occur first. In the event that one of the transformer switchyard circuit breakers fail to open (stuck breaker), then the breaker-failure protection scheme would operate and trip all breakers adjacent to the failed "stuck" breaker (see Figure 2-1). The time to clear the fault would be within 0.2 seconds (typical breaker-failure scheme is 8 to 12 cycles).

<u>Zone 1 supply side fault fed via offsite/SAT with failed (or inactive) SAT differential protection (87)</u> would result in a delayed clearing. The second level of transformer protection is relied upon to clear the fault and may be any one of the following:

- SAT primary side time overcurrent (51) relay
- SAT neutral overcurrent (51N, 51G) relay

- SAT ground fault detector (59N) relay
- SAT neutral ground (64) relay

This transformer next level of protection's primary purpose is to protect the transformer from excessive through-fault-current durations that could damage the transformer. Per IEEE Standard C57.109 [25], a review of fault clearing times in Figure 3-4, and IEEE paper [29], this time delay can range from 0.2 to 5 seconds. The SAT time overcurrent protection is expected to trip (via lockout (86)) the SAT switchyard breakers (and any dedicated SAT breaker) within this fault clearing time.

3.6.3 Zone 1 Switchgear Main Bus Bar Fault Progression

Faults within the main bus bars section are anywhere on the switchgear main bus bars and the bus work connecting the main bus to each switchgear circuit breaker cubicle interface connection. This part of the switchgear is outside the zone of differential protection (87) and differential protection is no longer credited.

Potential faults in Zone 1 main bus bars (with no GCB) include:

<u>Zone 1 main bus bar fault with functional switchgear bus supply breaker</u>. This fault is outside of the zone of transformer differential (87) protection and is sensed by the switchgear bus time overcurrent relay (51) and the upstream transformer overcurrent or neutral time overcurrent relay (51, 51N, 51G), ground fault detector (59), or neutral ground (64) relay. Since it is expected that the switchgear bus time overcurrent relay is faster than the transformer protection, the bus time overcurrent relay is expected to trip the switchgear bus supply circuit breaker first, within 4 seconds (see Table 3-2).

A Zone 1 main bus bar fault with failed "stuck" bus switchgear supply breaker can have different outcomes. This is dependent on whether the switchgear is fed from:

- Generator/UAT with a GCB
- Generator/UAT without a GCB
- Offsite/SAT

Zone 1 main bus bar via generator/UAT with a GCB

<u>Zone 1 main bus bar fault fed via UAT with GCB and "stuck" switchgear bus supply circuit breaker</u>. This fault is outside of zone of the UAT differential (87) protection scheme and the CT associated with the switchgear bus supply circuit breaker time overcurrent (51) is ineffective since it cannot trip a "stuck" circuit breaker. The next level of back up protection to a switchgear bus with a "stuck" breaker is the transformer primary time overcurrent (51) relay or neutral/ground time overcurrent relay (51N, 51G), ground fault detector (59), or neutral ground (64) relay.

This outcome is similar to the case of the *Zone 1 supply side fault fed from the UAT via GCB with failed (or inactive) UAT differential (87) protection* and is expected to see a time delay that may range from 0.2 to 5 seconds.

<u>Zone 1 main bus bar fault fed via UAT with "stuck" GCB and "stuck" switchgear bus supply circuit breaker)</u> will progress into a generator fed fault. This progression has two failures; the switchgear supply circuit breaker and the GCB failed "stuck" closed (independent failure). Since the fault is outside the UAT zone of differential (87) protection scheme and the switchgear time overcurrent (51) relay cannot trip a "stuck" switchgear bus supply circuit breaker, the upstream

UAT time overcurrent (51, 51N, 51G), ground fault detector (59), or neutral ground (64) relay is expected to detect the fault and isolate the switchyard/grid from feeding the fault.

This outcome is similar to the case of the *Zone 1 supply side fault fed from UAT with "stuck" GCB and failed (or inactive) UAT differential (87) protection* with a total duration from 4.2 to 20 seconds (0.2 to 5 seconds for relay trip followed by generator fed fault of 4 to 15 seconds).

Zone 1 main bus bar via Generator/UAT without a GCB

Zone 1 main bus bar fault fed from UAT in a unit-connected design with "stuck" switchgear bus supply circuit breaker) will develop into a generator fed fault.

This fault is outside of zone of the UAT differential (87) protection scheme and the CT associated with the switchgear bus supply circuit breaker time overcurrent (51) is ineffective since it cannot trip a "stuck" circuit breaker. The next level of back up protection to a switchgear bus with a "stuck" breaker is the transformer primary time overcurrent (51) relay or neutral/ground time overcurrent relay (51N, 51G), ground fault detector (59), or neutral ground (64) relay[4].

The outcome is similar to the case of the *Zone 1 supply side fault fed from UAT in a unit-connected design with "stuck" switchgear bus supply breaker* with a total duration from 4.2 to 20 seconds.

Zone 1 main bus bar via offsite/SAT

Zone 1 main bus bar fault fed from offsite/SAT with "stuck" switchgear bus supply circuit breaker is outside the zone of the SAT differential (87) protection scheme and the CT associated with the switchgear bus supply circuit breaker time overcurrent (51) is ineffective since it cannot trip a "stuck" circuit breaker. The next level of back up protection to a switchgear bus with a stuck breaker is the transformer primary time overcurrent (51) relay, neutral/ground time overcurrent relay (51N or 51G), ground fault detector (59), or neutral ground (64) relay[4].

This outcome is similar to the case of the *Zone 1 supply side fault fed via offsite/SAT with failed (or inactive) SAT differential protection (87ST, etc.)* and is expected to see a fault clearing time that may range from 0.2 to 5 seconds.

Zone 1 main bus bar fault fed from offsite/SAT with "stuck" switchgear bus supply circuit breaker and "stuck" switchyard circuit breaker) is outside the zone of the SAT differential (87) protection scheme and the CT associated with the switchgear bus supply circuit breaker time overcurrent (51) is ineffective since it cannot trip a "stuck" circuit breaker. The next level of back up protection to a switchgear bus with a "stuck" breaker is the transformer primary time overcurrent (51) relay, neutral/ground time overcurrent relay (51N or 51G), ground detector (59), or neutral ground (64) relay.

The SAT time overcurrent protection would send a trip signal to the switchyard primary side switchyard circuit breakers. In the event that one of the transformer switchyard breakers fail to open ("stuck" breaker) then the breaker-failure protection scheme would operate and trip all breakers adjacent to the failed breaker (see Figure 2-1). The time to clear the fault would typically range from 0.4 to 5.2 seconds (expected fault clearing time range of 0.2 to 5 seconds + 0.2 seconds which is a typical breaker-failure scheme of 8 to 12 cycles).

[4] Note: A few NPPs may have MV switchgear that is equipped with bus differential/bus breaker failure schemes (e.g., 50FD and 62). For switchgear equipped with differential protection/breaker failure schemes, the switchgear bus supply circuit breaker is supervised. If the circuit breaker remains "stuck" after a short time delay, the breaker failure scheme will trip and lockout the upstream transformer approximately 8 to 12 cycles later (within 0.2 seconds). The FCT is expected to be faster than the MV switchgear 51 time overcurrent relay.

3.6.4 Zone 1 Load Side Fault Progression

Potential scenarios in Zone 1 (load side of the load breaker) include:

A fault on the load side of any one of the switchgear load circuit breakers is expected to be interrupted by that load circuit breaker's instantaneous overcurrent (50) relay (within several cycles).

If the load breaker fails "stuck" closed, the back-up protection is the switchgear bus supply breaker's time overcurrent relay (51) as described in Zone 1 main bus bar fault progression (Section 3.6.3).

3.6.5 Zone 1 Fault Duration Summary

Table 3-6 documents the fault progression from Section 3.6.2 (Zone 1 – Supply Side), Section 3.6.3 (Zone 1 – Main Bus Bars), and Section 3.6.4 (Zone 1 – Load Side).

Table 3-7
Zone 1 Fault Progression

Initiation Location	Fed Via	Fault Description	Duration
Zone 1 Supply Side Fault	All lineups	Fault between switchgear 87 CT and load side of bus supply circuit breaker (with switchgear bus supply breaker functional)	cycles
	UAT via GCB	Fault on switchgear incoming bus work from UAT up to the line side of the bus supply circuit breaker (or bus supply circuit breaker "stuck")*	cycles
	UAT via GCB	Fault on switchgear incoming bus work from UAT up to the line side of the bus supply circuit breaker (or bus supply circuit breaker "stuck") with failed UAT differential (87) protection (interrupted by GCB) *	0.2 to 5 s
	UAT via GCB	Fault on switchgear incoming bus work from UAT up to the line side of the bus supply circuit breaker (or bus supply circuit breaker "stuck") with "stuck" GCB*	4 to 15 s
	UAT via GCB	Fault on switchgear incoming bus-work from UAT up to the line side of the bus supply circuit breaker (or bus supply circuit breaker "stuck") with "stuck" GCB and failed UAT differential (87) protection	4.2 to 20 s
	UAT (unit connected design)	Fault on switchgear incoming bus-work from UAT up to the line side of the bus supply circuit breaker (or bus supply circuit breaker "stuck") *	4 to 15 s
	UAT (unit connected design)	Fault on switchgear incoming bus-work from UAT up to the line side of the bus supply circuit breaker (or bus supply circuit breaker "stuck") * with failed UAT differential protection (87AT)	4.2 to 20 s
	Offsite/SAT	Fault on switchgear incoming bus-work from SAT up to the line side of the bus supply circuit breaker (or bus supply circuit breaker "stuck") *	cycles
	Offsite/SAT	Fault on switchgear incoming bus-work from SAT up to the line side of the bus supply circuit breaker (or bus supply circuit breaker "stuck") * "stuck" switchyard circuit breaker.	≤ 0.2 s
	Offsite/SAT	Fault on switchgear incoming bus-work from SAT up to the line side of the bus supply circuit breaker (or bus supply circuit breaker "stuck") * with failed SAT differential protection (87)	0.2 to 5 s
	All lineups	Fault with functional switchgear bus supply breaker	≤ 4 s
	UAT via GCB	Fault with "stuck" switchgear bus supply breaker	0.2 to 5 s

Table 3-7
Zone 1 Fault Progression (cont.)

Initiation Location	Fed Via	Fault Description	Duration
Zone 1 Main Bus Bar Fault	UAT via GCB	Fault with “stuck” GCB and “stuck” switchgear bus supply breaker**	4.2 to 20 s
	UAT (unit connected design)	Fault with “stuck” switchgear bus supply breaker	4.2 to 20 s
	Offsite/SAT	Fault with “stuck” switchgear bus supply breaker***	0.2 to 5 s
	Offsite/SAT	Fault with “stuck” switchgear bus supply breaker and “stuck” switchyard breaker**	0.4 to 5.2 s
Zone 1 Load Side Fault	All lineups	Fault with fully functional switchgear load breaker	cycles
	All lineups	Fault with failed (stuck closed) switchgear load breaker and functional switchgear bus supply breaker	≤ 4 s
	UAT via GCB	Fault with failed “stuck” load breaker and “stuck” switchgear bus supply breaker**	0.2 to 5 s
	UAT via GCB	Fault with failed “stuck” load breaker, “stuck” GCB, and “stuck” switchgear bus supply breaker**	4.2 to 20 s
	UAT (unit connected design)	Fault with failed “stuck” load breaker and “stuck” switchgear bus supply breaker**	4.2 to 20 s
	Offsite/SAT	Fault with failed “stuck” load breaker and “stuck” switchgear bus supply breaker**	0.2 to 5 s
	Offsite/SAT	Fault with failed “stuck” load breaker, “stuck” switchgear bus supply breaker, and “stuck” switchyard breaker**	0.4 to 5.2 s

*Depending on fault location, this may be the result of two independent failures

**At least two independent failures must occur for this scenario.

The fault progression tree for Zone 1 is shown in Figure 3-14. The end states associated with successful protection and not capable of producing fault duration sufficient enough to create a HEAF are shown in light grey text.

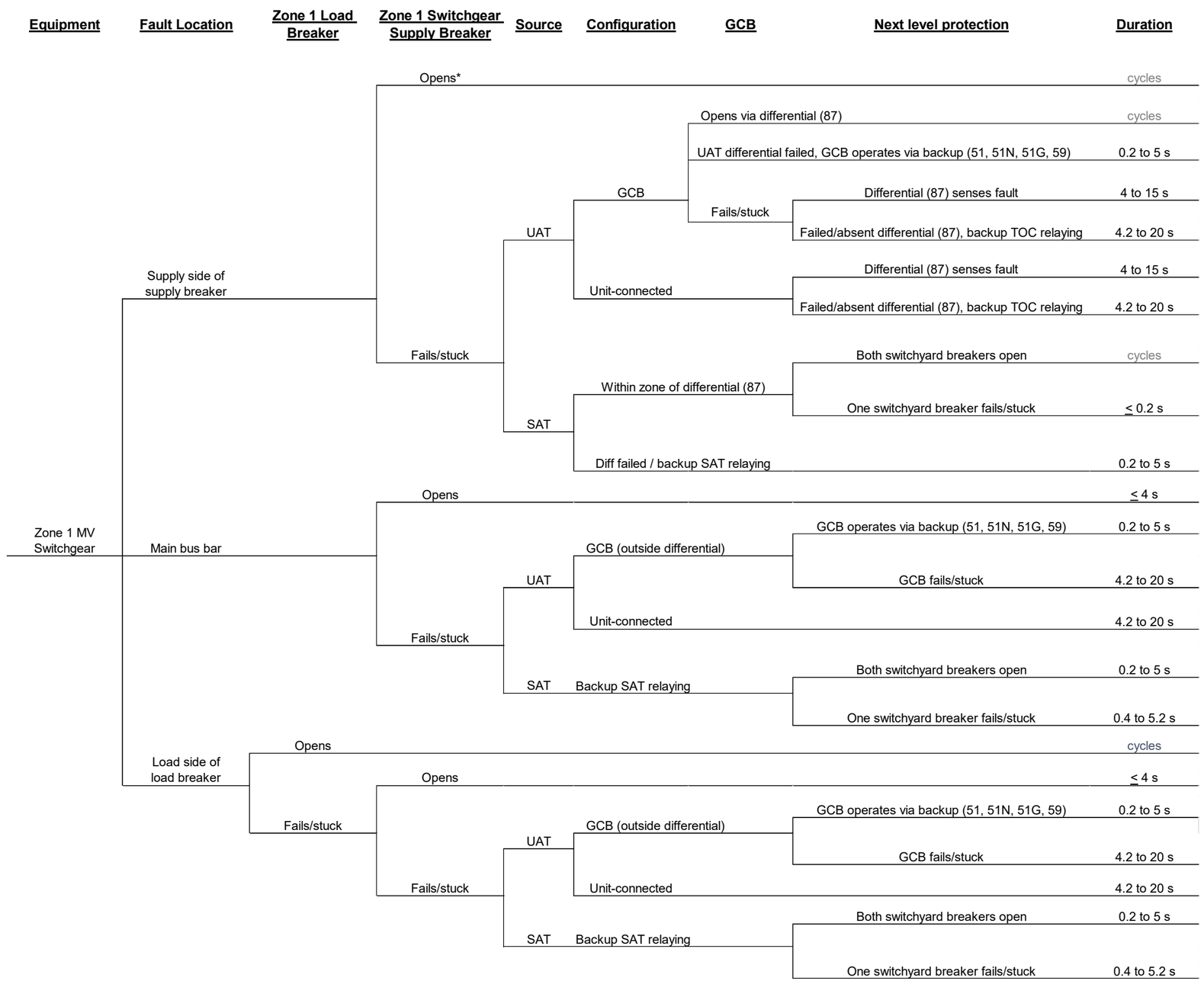

Figure 3-14
Zone 1 Fault Progression Tree

3.7 Zone BD1 Faults

This section evaluates faults initiating in medium voltage NSBD between the first switchgear and the high side of the second switchgear bus supply circuit breaker (bus duct from Zone 1 to Zone 2) or the high side of the load center (bus duct from Zone 1 to Zone 3).

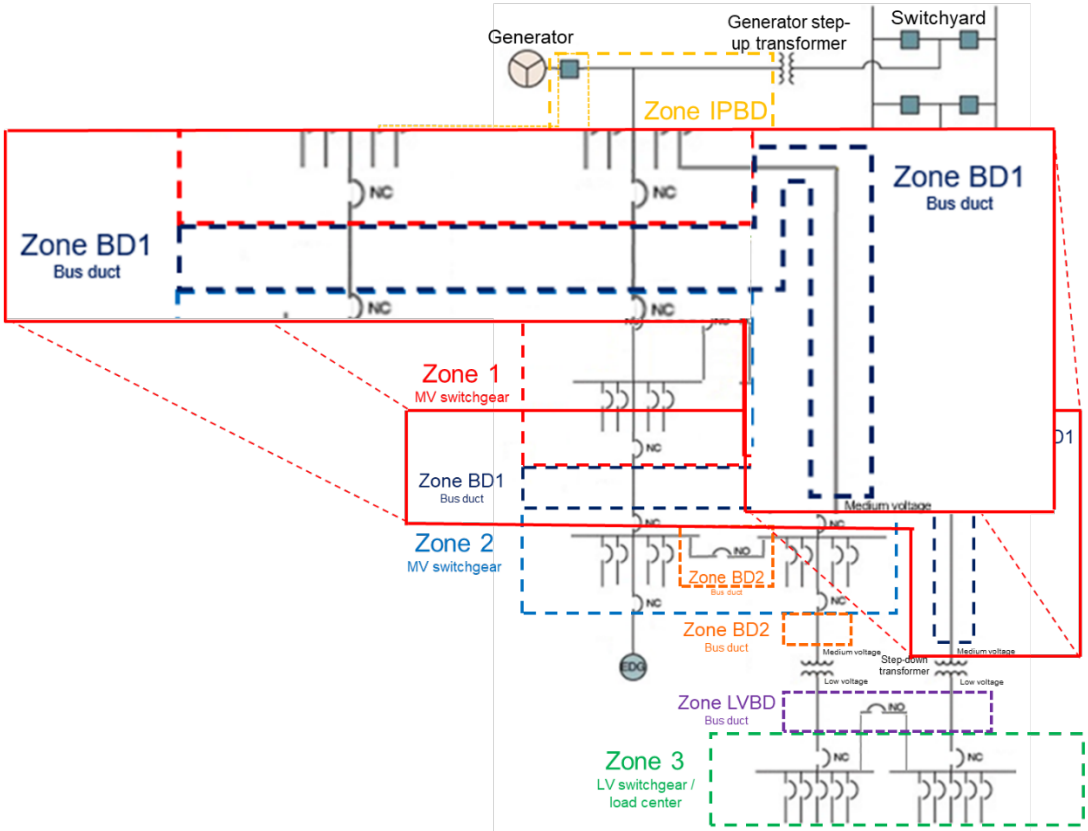

Figure 3-15
Zone BD1: Medium Voltage NSBD (Bin 16.1-2)

This zone is an extension of the Zone 1, load portion of the switchgear. In this case, the load is downstream of the medium voltage switchgear at the same voltage level (that is, no transformer).

For the subsequent fault progression analysis, it is assumed that either no Zone 1 load circuit breaker exits, or if a circuit breaker exits, it is treated as a maintenance switch. Even if a trip element/relay exists, the protection overlaps with the Zone 2 bus supply breaker (that is, it is not coordinated with the Zone 2 bus supply circuit breaker). However, it would be coordinated with the Zone 1 bus supply breaker. Nonetheless, this protection (if it exists) is not credited in the fault progression.

Since Zone BD1 is an extension of the Zone 1 load section of the switchgear, the fault must be cleared by the Zone 1 switchgear bus supply breaker (≤ 4 seconds as determined in Section 3.2.3). If the fault is not cleared, it follows the progression of Zone 1 switchgear main bus bar fault progression (Section 3.6.3).

3.7.1 Zone BD1 Fault Duration Summary

Table 3-7 documents the event progression and corresponding durations for Zone BD1.

Table 3-8
Zone BD1 Fault Progression

Zone	Fed Via	Fault Description	Duration
BD1	All	Functional Zone 1 switchgear bus supply breaker	≤ 4 s
	UAT via GCB	Fault with “stuck” Zone 1 switchgear bus supply breaker	0.2 to 5 s
	UAT via GCB	Fault with “stuck” GCB and “stuck” Zone 1 switchgear bus supply breaker *	4.2 to 20 s
	UAT (unit connected design)	Fault with “stuck” Zone 1 switchgear bus supply breaker	4.2 to 20 s
	Offsite/SAT	Fault with “stuck” Zone 1 switchgear bus supply breaker	0.2 to 5 s
	Offsite/SAT	Fault with “stuck” Zone 1 switchgear bus supply breaker and “stuck” switchyard breaker*	0.4 to 5.2 s

*Two independent failure scenarios

The fault progression tree for Zone BD1 is shown in Figure 3-16.

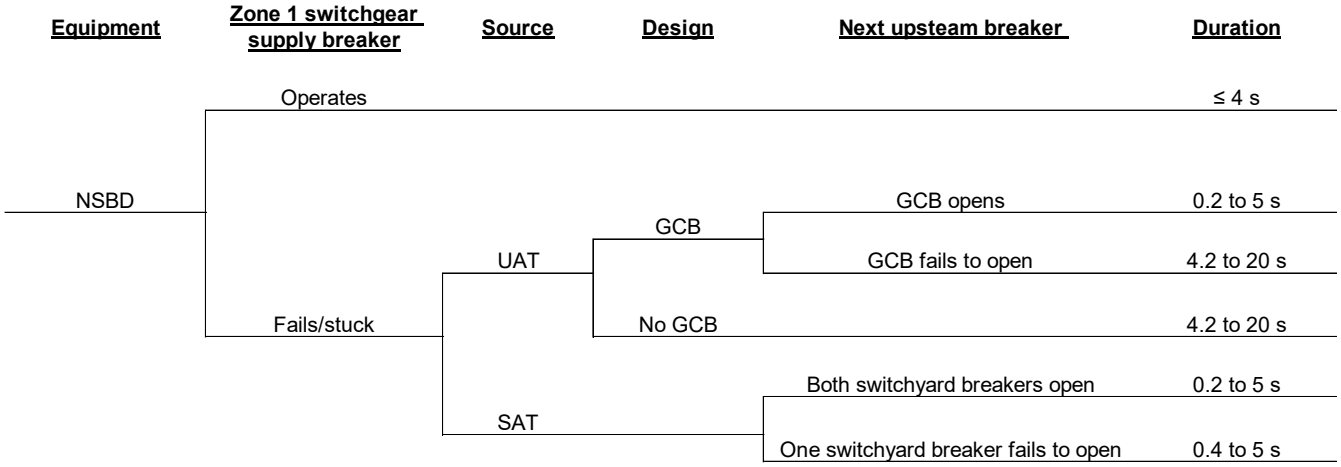

Figure 3-16
Zone BD1 Fault Progression Tree

3.8 MV Switchgear Zone 2 Faults

Zone 2 is fed from one of the Zone 1 load branch circuit breakers without an instantaneous overcurrent (50) relay. The Zone 2 switchgear bus supply circuit breaker is physically part of the Zone 2 switchgear and selectively coordinated with the upstream Zone 1 switchgear bus supply breaker to clear a Zone 2 fault (that results in a bus lockout) before Zone 1 bus supply protection actuates.

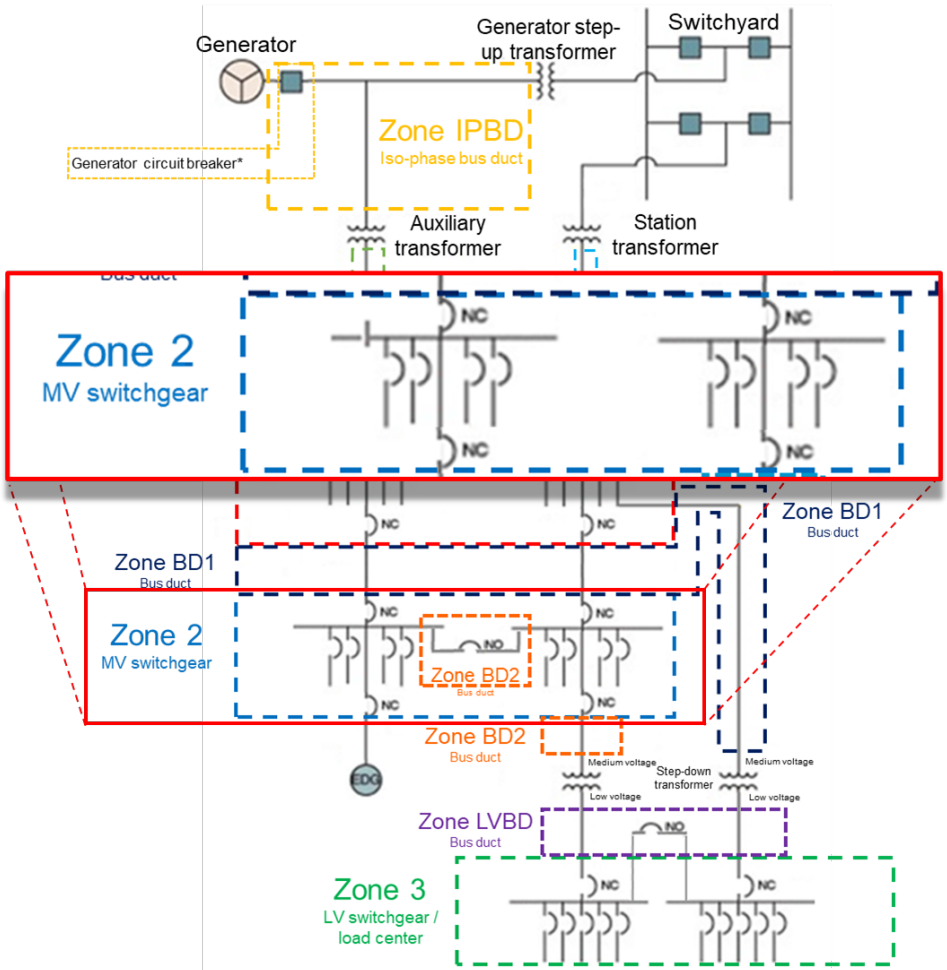

Figure 3-17
Zone 2: Medium Voltage Switchgear (Bin 16.b)

The Zone 1 feed to Zone 2 may either be:

- Straight bus connected directly to NSBD or cable from Zone 1 switchgear load cubicle without a circuit breaker
- Zone 1 load branch cubicle circuit breaker feeding Zone 2:
    - Circuit breaker containing no trip element or overcurrent protection (commonly referred to as maintenance switch)

  - Circuit breaker with overcurrent protection, selectively coordinated with the Zone 1 switchgear bus supply breaker (but not necessarily coordinated with the Zone 2 bus supply breaker).

- The Zone 1 to Zone 2 path may include a medium voltage stepdown transformer (e.g., 13.8 kV to 4.16 kV)

For the subsequent fault progression analysis, it is assumed that either no Zone 1 load branch circuit breaker exits, or if it does that the protection is not credited in Zone 2.

Similar to Zone 1, fault scenarios in Zone 2 are analyzed by compartmentalizing the switchgear into three sections and whether the Zone 2 switchgear bus supply circuit breaker has failed "stuck" closed. The three fault locations include:

1. Zone 2 supply side of bus supply circuit breaker, including circuit breaker connection stabs to the switchgear, time overcurrent (51) current transformers, and primary compartment bus work (see Figure 3-12).
2. Zone 2 main bus bars, including the bus-work connecting the switchgear/circuit breaker interface connection:
    a. Downstream of the switchgear bus supply circuit breaker time overcurrent relay (51) CTs
        i. Breaker stabs (e.g., horizontal draw-out circuit breaker switchgear)
        ii. Primary cable compartment bus work for (e.g., vertical-lift circuit breaker switchgear). See Figure 3-13.
    b. Upstream of the switchgear load circuit breaker
3. Zone 2 load side of load breaker:
    a. Includes switchgear load circuit breaker overcurrent 50/51 relays (and in some cases an instantaneous ground fault relay (50G))

3.8.1 Zone 2 Protection Overview

For a fault in Zone 2, the following protection elements are credited to limit the fault duration:

- <u>Switchgear bus supply circuit breaker time overcurrent (51) – delay</u>:
  The switchgear bus supply circuit breaker time over current (51) protection relay CTs are located within the physical zone where the incoming Zone 1 power supply connects to the switchgear bus supply circuit breaker. The CTs may either be part of the circuit breaker connection stabs (e.g., horizontal draw-out) or on the primary cable compartment bus in the rear of the switchgear (e.g., vertical lift style – see Figure 3-13).
- <u>Switchgear bus load circuit breaker overcurrent relays (50/51) and ground fault (50G)</u>:
  The switchgear load sections are typically equipped with both instantaneous (50) and time overcurrent (51) relays. Some plants may also include ground fault protection in the form of a 50G relay.
  - 50 instantaneous relay: This relay operates instantaneously (several cycles) for cable or load faults (e.g., short-circuits, large arc faults). The load circuit breaker is immediately tripped for these faults.
  - 51 time overcurrent relay: This relay operates after a time delay. The primary purpose of the relay is to protect the load (e.g., motor, load center transformer, etc.)

from a sustained overload. Time delay varies with the severity of the overload and is set to be selectively coordinated with the switchgear bus supply circuit breakers. These relays are inverse time overcurrent type where the FCT is inversely proportional to the fault current.

- 50G relay: Typically used for delta ungrounded EDS. This scheme consists of one large CT where all three cables pass through one CT (commonly referred to as a "donut" CT). The principle of operation is that a ground fault will create an imbalance between the three phase currents due to some of the current going to ground. Once the setpoint of imbalance is reached, the load circuit breaker is immediately tripped (cycles).

3.8.2 Zone 2 Switchgear Supply Side Fault Progression

The Zone 2 supply side includes the switchgear bus supply circuit breaker, including circuit breaker connection stabs to the switchgear, switchgear bus supply time overcurrent (51) CTs, and primary compartment or riser bus work (see Figure 3-13).

Zone 2 supply side fault with functional switchgear bus supply breaker. Faults within the Zone 2 bus supply circuit breaker time overcurrent (51) relay CTs zone of protection are expected to clear within 2 seconds.

Zone 2 supply side fault with switchgear bus supply circuit breaker failed "stuck" or outside of the protection zone. Faults upstream of the Zone 2 bus supply breaker time overcurrent (51) relay CTs are outside the zone of protection and will have to be cleared by the Zone 1 switchgear bus supply circuit breaker (within 4 seconds).

This duration can also be used where the fault was detectable in Zone 2 supply side; however, either the breaker failed "stuck" closed, breaker connection stabs faulted, or the overcurrent (51) protection system failed.

Zone 2 supply side fault with switchgear bus supply breaker failed "stuck" or outside of the protection zone and upstream (Zone 1) switchgear bus supply circuit breaker "stuck" will progress as Zone 1 "stuck" bus supply circuit breaker fault (no credit for Zone 1 load branch circuit breaker, if it exists).

3.8.3 Zone 2 Switchgear Main Bus Bar Fault Progression

Zone 2 main bus bar includes the main bus bar and the bus-work connecting to the circuit breaker stab connections of the switchgear.

Zone 2 main bus bar fault with functional bus supply circuit breaker is within the zone of protection of the Zone 2 supply side time overcurrent (51) protection CTs and will trip the Zone 2 switchgear bus supply circuit breaker within 2 seconds (since the Zone 2 switchgear bus supply circuit breaker must be selectively coordinated with the Zone 1 bus supply circuit breaker, see Table 3-2 for further discussion on MV switchgear fault clearing times).

Zone 2 main bus bar fault with Zone 2 switchgear bus supply circuit breaker failed "stuck" must be cleared by the Zone 1 switchgear bus supply circuit breaker (assumption that the Zone 1 "stuck" bus supply circuit breaker does not exist or is not credited) within 4 seconds.

Zone 2 main bus bar fault with Zone 2 switchgear bus supply circuit breaker failed "stuck" and upstream (Zone 1) switchgear bus supply circuit breaker "stuck" will progress the same as Zone 1 "stuck" bus supply circuit breaker fault (no credit for Zone 1 load branch circuit breaker if it exists).

3.8.4 Zone 2 Switchgear Load Side Fault Progression

The Zone 2 load circuit breaker and downstream bus work that powers the load (e.g., motor or load center) has the following potential fault progressions:

Zone 2 load side fault with functional load circuit breaker is detected by the instantaneous overcurrent (50) protection relay and immediately trips the load circuit breaker in several cycles.

Zone 2 load side fault with a failed “stuck” load circuit breaker is expected to be cleared by the upstream Zone 2 bus supply circuit breaker within 2 seconds (since the Zone 2 switchgear bus supply circuit breaker must be selectively coordinated with the Zone 1 bus supply circuit breaker).

This duration can also be used if either the load circuit breaker failed “stuck” closed, circuit breaker connection stabs faulted, or the instantaneous overcurrent (50) protection system failed.

Zone 2 load side fault with failed “stuck” load breaker and Zone 2 switchgear bus supply breaker “stuck” and upstream (Zone 1) switchgear bus supply circuit breaker “stuck” will progress the same as Zone 1 “stuck” bus supply circuit breaker fault (no credit for Zone 1 load branch circuit breaker if it exists).

3.8.5 Zone 2 Switchgear Fault Duration Summary

Table 3-8 documents the fault durations from Section 3.8.2 (Zone 2 supply side), Section 3.8.3 (Zone 2 main bus bar), and Section 3.8.4 (Zone 2 load side).

Table 3-9
Zone 2 Fault Progression

Initiation Location	Fed Via	Fault Description	Duration
Zone 2 Supply Side Fault	All lineups	Fault (within zone of time overcurrent (51) protection) cleared by Zone 2 bus supply circuit breaker	≤ 2 s
	All lineups	Fault with “stuck” Zone 2 switchgear bus supply breaker with functional Zone 1 switchgear bus supply breaker	≤ 4 s
	UAT via GCB	Fault outside 51 zone of protection or “stuck” Zone 2 switchgear bus supply breaker and “stuck” Zone 1 switchgear bus supply breaker*	0.2 to 5 s
	UAT via GCB	Fault outside 51 zone of protection or “stuck” GCB, “stuck” Zone 2 switchgear bus supply breaker, and “stuck” Zone 1 switchgear bus supply breaker**	4.2 to 20 s
	UAT (unit connected design)	Fault outside 51 zone of protection or “stuck” Zone 2 switchgear bus supply breaker and a “stuck” Zone 1 switchgear bus supply breaker*	4.2 to 20 s
	Offsite/SAT	Fault outside 51 zone of protection or “stuck” Zone 2 switchgear bus supply breaker and a “stuck” Zone 1 switchgear bus supply breaker *	0.2 to 5 s
	Offsite/SAT	Fault outside 51 zone of protection or “stuck” Zone 2 switchgear bus supply breaker, a “stuck” Zone 1 switchgear bus supply breaker, and “stuck” switchyard breaker**	0.4 to 5.2s
Zone 2 Main Bus Bar Fault	All lineups	Fault with functional Zone 2 switchgear bus supply breaker	≤ 2 s
	All lineups	Fault with “stuck” Zone 2 switchgear bus supply breaker and functional Zone 1 switchgear bus supply breaker	≤ 4 s
	UAT via GCB	Fault with “stuck” Zone 2 switchgear bus supply breaker and “Stuck” Zone 1 switchgear bus supply breaker*	0.2 to 5 s
	UAT via GCB	Fault with “stuck” GCB, “stuck” Zone 2 switchgear bus supply breaker, and “stuck” Zone 1 switchgear bus supply breaker**	4.2 to 20 s

Table 3-9
Zone 2 Fault Progression (cont.)

Initiation Location	Fed Via	Fault Description	Duration
	UAT (unit connected design)	Fault with a “stuck” Zone 2 switchgear bus supply breaker and a “stuck” Zone 1 switchgear bus supply breaker*	4.2 to 20 s
	Offsite/SAT	Fault with a “stuck” Zone 2 switchgear bus supply breaker and “stuck” Zone 1 switchgear bus supply breaker*	0.2 to 5 s
	Offsite/SAT	Fault with a “stuck” Zone 2 switchgear bus supply breaker, “stuck” Zone 1 switchgear bus supply breaker, and “stuck” switchyard breaker**	0.4 to 5.2s
Zone 2 Load Side Fault	All lineups	Functional Zone 2 switchgear load breaker	cycles
	All lineups	Fault with “stuck” switchgear load breaker and functional Zone 2 switchgear bus supply breaker*	≤ 2 s
	All lineups	Fault with “stuck” Zone 2 switchgear load breaker, a “stuck” Zone 2 bus supply breaker, and a functional Zone 1 switchgear bus supply breaker**	≤ 4 s
	UAT via GCB	Fault with “stuck” Zone 2 load breaker, “stuck” Zone 2 switchgear bus supply breaker, and “stuck” Zone 1 switchgear bus supply breaker**	0.2 to 5 s
	UAT via GCB	Fault with “stuck” Zone 2 load breaker, “stuck” GCB, “stuck” Zone 2 switchgear bus supply breaker, and “stuck” Zone 1 switchgear bus supply breaker**	4.2 to 20 s
	UAT (unit connected design)	Fault with “stuck” Zone 2 load breaker, “stuck” Zone 2 switchgear bus supply breaker and a “stuck” Zone 1 switchgear bus supply breaker**	4.2 to 20 s
	Offsite/SAT	Fault with “stuck” Zone 2 load breaker, “stuck Zone 2 switchgear bus supply breaker, and “stuck” Zone 1 switchgear bus supply breaker**	0.2 to 5 s
	Offsite/SAT	Fault with “stuck” Zone 2 load breaker, “stuck” Zone 2 switchgear bus supply breaker, “stuck” Zone 1 switchgear bus supply breaker, and “stuck” switchyard breaker**	0.4 to 5.2s

*If fault is within the Zone 2 bus supply circuit breaker 51 zone of protection, then this scenario requires two independent failures

**If fault is within the Zone 2 bus supply circuit breaker 51 zone of protection, then this scenario requires at least three independent failures

The fault progression tree for Zone 2 is shown in Figure 3-18. The end states associated with successful protection and not capable of producing HEAF level consequences are shown in light grey text.

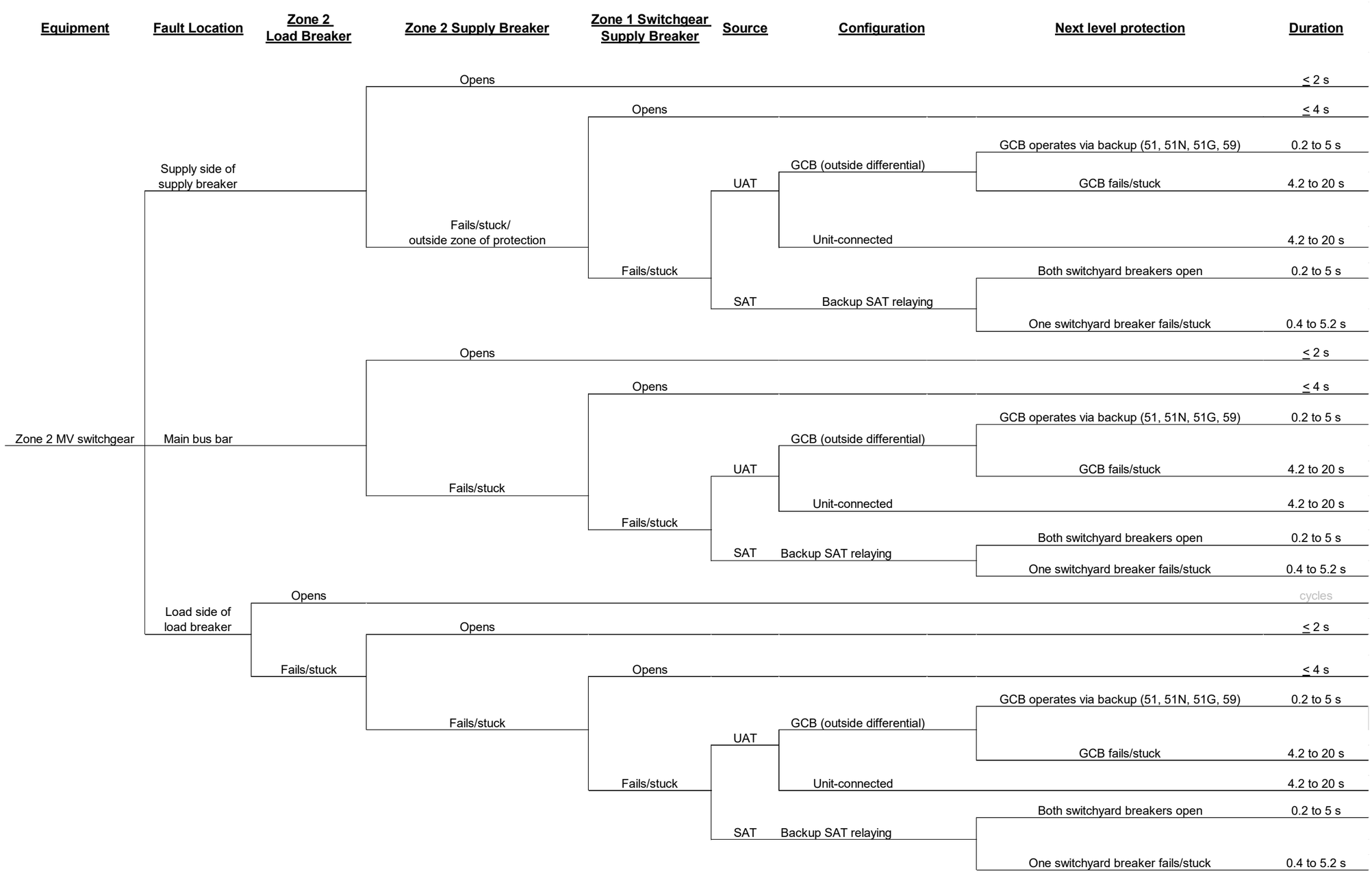

Figure 3-18
Zone 2 Fault Progression Tree

3.9 Zone BD2 Fault Durations

This section evaluates faults that initiate in the NSBD that feeds Zone 3 (load center) from Zone 2 (second medium voltage switchgear).

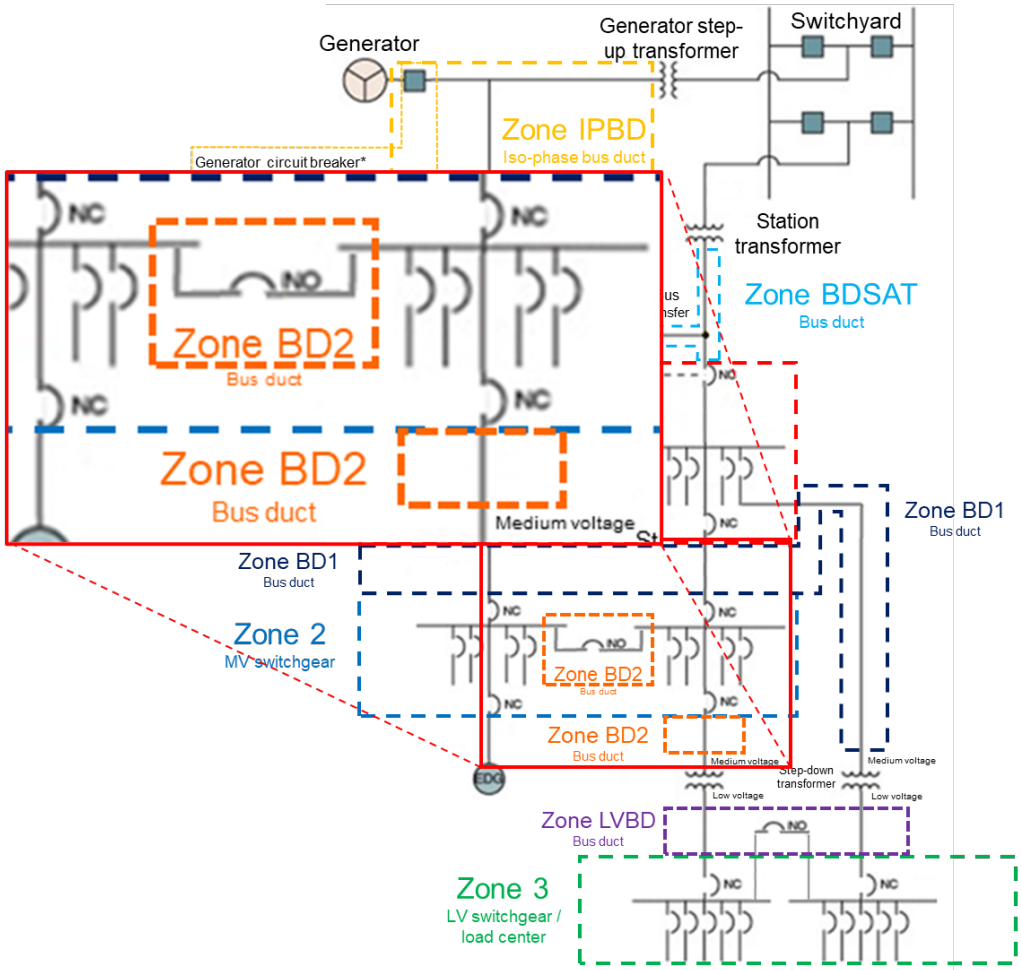

Figure 3-19
Zone BD2: Medium Voltage NSBD (Bin 16.1-2)

BD2 is an extension of the Zone 2 switchgear load branch portion of the switchgear. In this case, the power flows through a step-down transformer that serves the load centers.

Protection is expected to be a time overcurrent relay (51) that will trip the bus supply circuit breaker to the load center transformer in less than 2 seconds, as it must be selectively coordinated with and operate before the upstream Zone 2 bus supply circuit breaker. Therefore, a fault in Zone BD2 will have the same fault progression as if the fault occurred in the Zone 2 load breaker, except that cycles is replaced with 2 seconds.

> Note: Zone 2 load breakers serving Zone 3 do not have an instantaneous (50) trip element (or if it does, it is set above the available fault current and is considered non-functional). As such, for proper coordination with the Zone 2 bus supply circuit breaker, the Zone 3 bus supply circuit breaker (which is a Zone 2 load branch) time overcurrent (51) relay is set slightly less than the Zone 2 supply breaker and is the basis for an arc

duration under 2 seconds rather than under 4 seconds (as for Zone 1) as described in Section 3.2.3.

3.9.1 Zone BD2 Fault Duration Summary

Table 3-9 documents the fault progression for Zone BD2. The duration ranges associated with at least three independent protection system failures is based on operation of the auxiliary power transformer backup time overcurrent (51) protection (i.e., UAT and SAT). Although the arc voltage is expected to remain the same throughout the medium voltage EDS, the fault current magnitude may be attenuated due to circuit impedance and the time to fault clearing may be fractions of a seconds slower. Since there are no transformations between the UAT/SAT and BD2, the fault current is still expected to be in the range of the 51 overcurrent inverse-time characteristic curve such that the total integrated FCT energy and corresponding ZOI will not appreciably change.

Table 3-10
Zone BD2 Fault Progression

Zone	Fed Via	Fault description	Duration
BD2	All	Fault with functional Zone 2 switchgear load branch breaker	≤ 2 s
	All	Fault with “stuck” Zone 2 switchgear load branch breaker and a fully functional Zone 2 switchgear bus supply breaker	≤ 2 s
	All	Fault with “stuck” Zone 2 switchgear load branch breaker, a “stuck” Zone 2 switchgear bus supply breaker and a functional Zone 1 switchgear bus supply breaker*	≤ 4 s
	UAT via GCB	Fault with “stuck” Zone 2 load breaker, “stuck” Zone 2 switchgear bus supply breaker, and “stuck” Zone 1 switchgear bus supply breaker***	0.2 to 5 s
	UAT via GCB	Fault with “stuck” Zone 2 load breaker, “stuck” Zone 2 switchgear bus supply breaker, “stuck” Zone 1 switchgear bus supply breaker), and “stuck” GCB****	4.2 to 20 s
	UAT (unit connected design)	Fault with a “stuck” Zone 2 load breaker, “stuck” Zone 2 switchgear bus supply breaker, and a “stuck” Zone 1 switchgear bus supply breaker***	4.2 to 20 s
	Offsite/SAT	Fault with a “stuck” Zone 2 load breaker, “stuck” Zone 2 switchgear bus supply breaker, and “stuck” Zone 1 switchgear bus supply breaker***	0.2 to 5 s
	Offsite/SAT	Fault with a “stuck” Zone 2 load breaker, “stuck” Zone 2 switchgear bus supply breaker, “stuck” Zone 1 switchgear bus supply breaker, and “stuck” switchyard breaker****	0.4 to 5.2 s

**Two independent failure scenarios

***Three independent failure scenarios

****Four independent failure scenario

The event progression tree for Zone BD2 is shown in Figure 3-20.

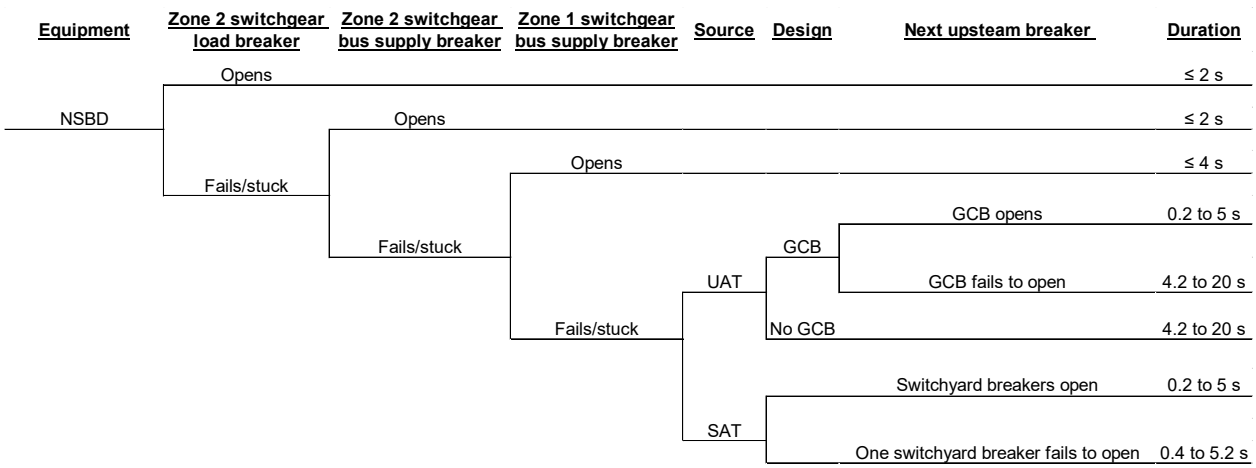

Figure 3-20
BD2 Fault Progression Tree

3.10 Zone LVBD Faults

This section evaluates faults that initiate in the NSBD that feeds Zone 3 (load center) from the secondary side of the step-down transformer or between load centers in Zone 3.

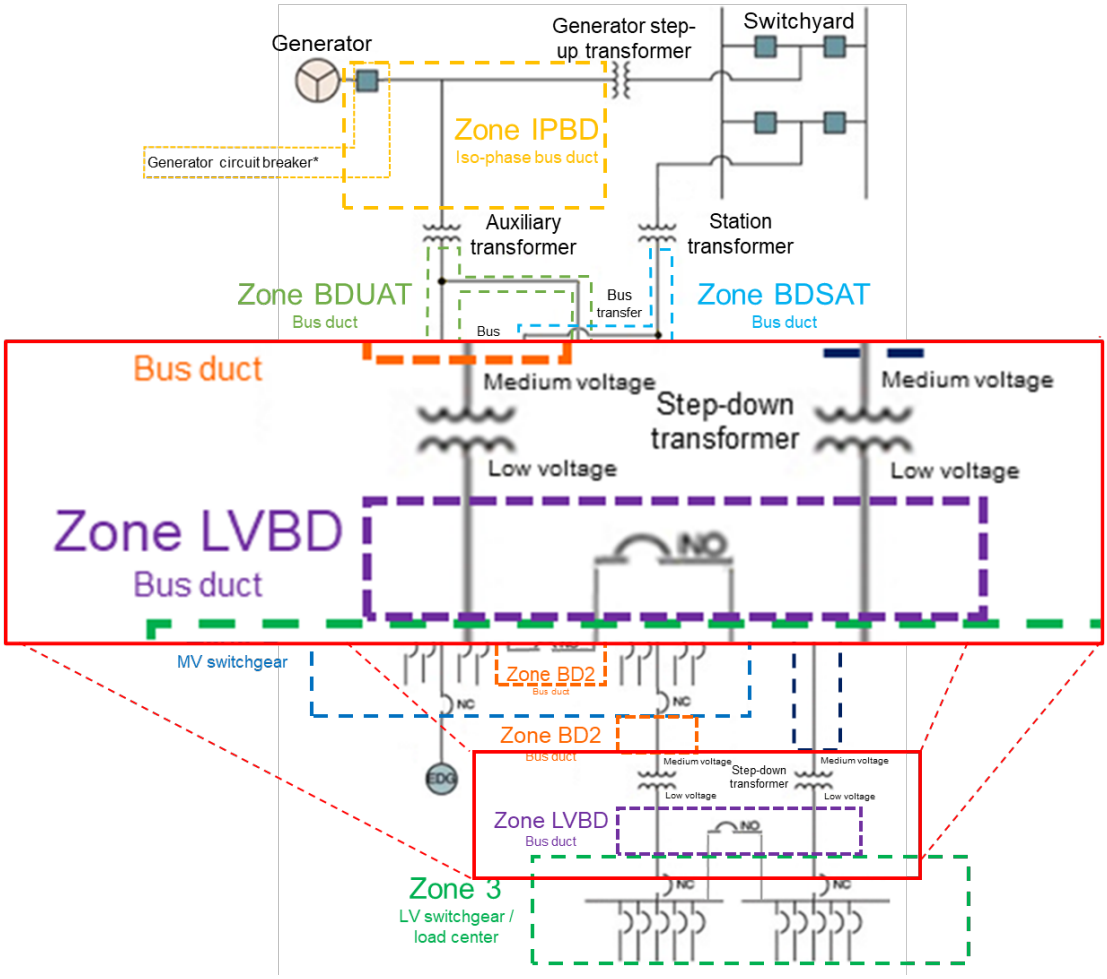

Figure 3-21
Zone LVBD: Low Voltage NSBD (Bin 16.1-2)

A LVBD is sometimes used as a connection between the secondary side of step-down transformer and the load center when the transformer is not an integral section of the load center or connected with cables. In this case, the power flows through a step-down transformer that serves the load centers.

Protection is expected to be a time overcurrent relay (51) that will trip the load branch circuit breaker to the load center transformer (transformer protection) in typically less than 2 seconds, as it must be selectively coordinated with and operate before the upstream bus supply circuit breaker.

A LVBD may also connect load centers and is an extension of a load center load branch to another load center or MCC. This may be through a straight connection or a load circuit breaker from the supplying load center.

Protection for these cases is expected to be a time overcurrent relay (51) of the load branch circuit breaker or supply breaker of the load center feeding the fault and is expected to operate within 2 seconds (since circuit breakers must be selectively coordinated).

3.10.1 Zone LVBD Fault Duration Summary

Table 3-10 documents the fault progression for Zone LVBD.

Table 3-11
Zone LVBD Fault Progression and Durations

Zone	Fed Via	Fault description	Duration
LVBD	All	Fault with functional upstream medium voltage switchgear load breaker	≤ 2 s
	All	Fault with functional upstream low voltage supply breaker	≤ 2 s

3.11 Load Center (Zone 3) Faults

Zone 3 involves fault scenarios in load centers.

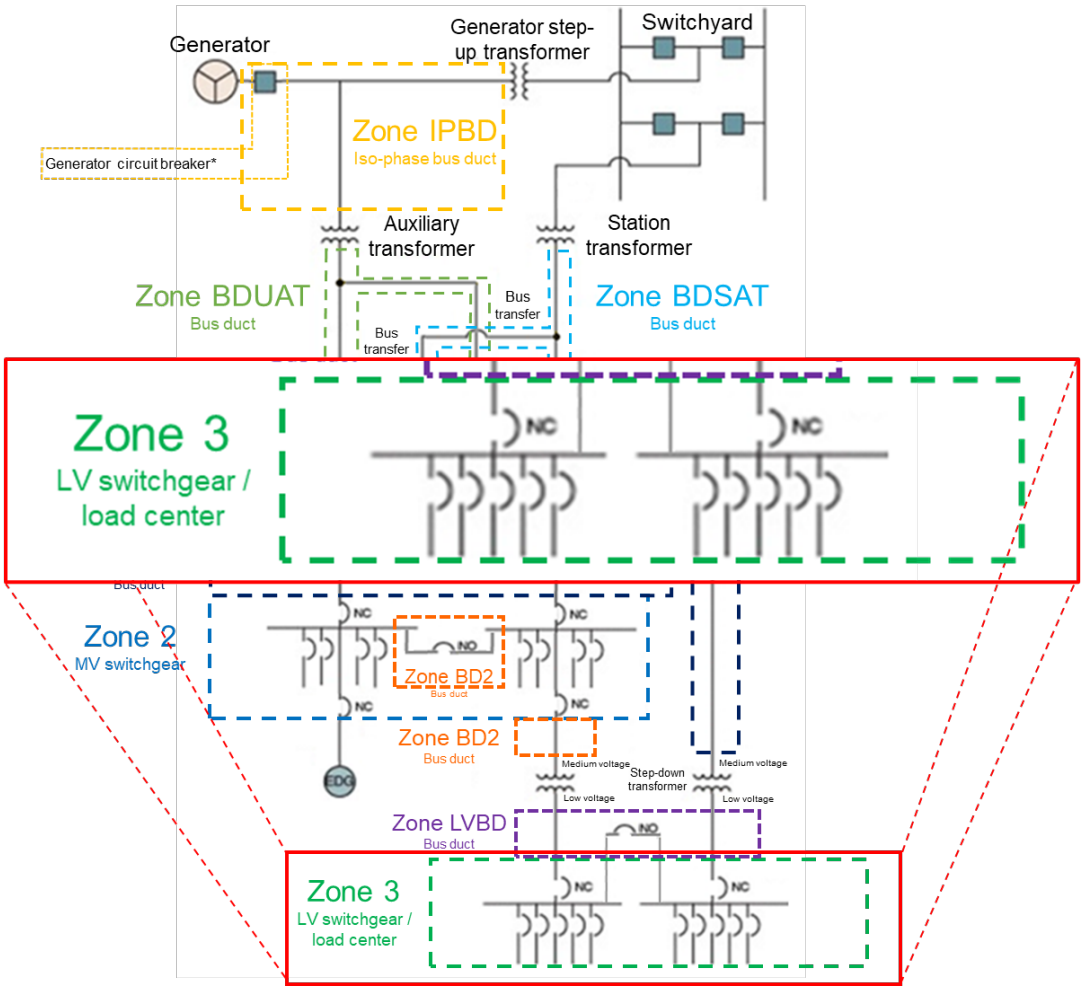

Figure 3-22
Zone 3: Load Centers (Bin 16.a)

For a fault in Zone 3 the following protection elements are credited to limit the fault duration:

- <u>Load center transformer protection:</u> For the purposes of the fault progression analysis, the stepdown transformer is considered small (under 3,000 kVA) and is not protected by a differential protection (87) scheme. It is protected by the upstream, medium voltage feeder circuit breaker fed from either Zone 1 or Zone 2 (Figure 3-1) using standard time overcurrent (51) relays (located in Zone 1 or Zone 2).
    - <u>Time overcurrent (51) - delay</u>: This relay operates after a time delay. The primary purpose of the relay is to protect the load center transformer from faults and extreme overloads. Time delay varies with the severity of the overload and is selected and set to protect the transformer and be selectively coordinated with respective upstream medium voltage switchgear bus supply circuit breaker. These relays are of the inverse time overcurrent type where the FCT is inversely proportional to the fault current.

- Load center low voltage power circuit breaker (LVPCB): LVPCBs operate similarly to medium voltage circuit breakers. Current is sensed by CTs; however, their trip unit characteristics differ from standard medium voltage over current relays. These trip units may include long time, short time, and instantaneous protection time-current-characteristic (TCC) zones.
    - Load center bus supply circuit breaker: Includes the TCC characteristic above with the exception they will not have an instantaneous element (or it is set above the available system fault current). The fast trip associated with the supply breakers is the short-time delay trip. It is set to be selectively coordinated with all the load breakers and is typically limited to a 0.5 second or shorter trip delay at system available fault current.
    - Transformer protection may not always be selectively coordinated with the load center bus supply circuit breaker (in certain areas). For cases where only one load center is supplied by a transformer (typical case), there is no consequence as to which breaker trips first for a fault in the load center (i.e., medium voltage load branch circuit breaker or load center bus supply circuit breaker). This overlap is limited and typically occurs in the region between the fault and overload.

3.11.1 Zone 3 Protection Overview

From historical operating experience, low voltage HEAFs occur less frequently than medium voltage HEAF events. The only two load center HEAF events originated in the bus supply circuit breaker cubicle at the connection stab finger cluster area (inside the load center breaker compartment) and there are no reported HEAF events in the load center main bus bar compartment. There are two postulated theoretical factors that influence why there is a low frequency of low voltage HEAFs,

1. Available energy, and
2. Compartment geometry, including the free air volume, bus bar design arrangement, etc.

Both low-voltage HEAF events involved arcing currents below the time overcurrent (51) setting for rapid isolation (in one case, the arc persisted for 41 seconds, and then still had to be manually terminated). The other reported HEAF event similarly stated that that the current was too low to be rapidly isolated by the time overcurrent (51) relay and ultimately self-extinguished (no duration was given). The descriptions of the low voltage HEAF events indicate that the current portion of the energy was relatively low when compared to medium voltage HEAF events. However, larger load center transformers (e.g., over 2,500 kVA) have the potential to allow larger energy let-through to sustain high impedance arcing faults if the corresponding TOC (51) relay settings are too high.

Arcing events in low voltage systems less frequently escalate to HEAFs as they do not have the energy to sustain and typically remain as arc flash events.

Zone 3 Load Center Geometric Effects on Arc Development

Load center circuit breaker cubicles are tightly confined spaces. The main bus work and runback bus bars are in a relatively much larger common compartment mostly consisting of free air volume.

The two OE events were the result of high resistance circuit breaker connections which originated in the circuit breaker cubicle (a very confined air space). It is postulated that over time, the high resistance breaker connection resulted in heating of the connections, which in

turn continued to further increase the resistance of the connections until a thermal runaway condition occurred where the current increased sufficiently to arc over and ionize the air between breaker connection stabs. (That is, the circuit breaker stabs were located within the breaker cubicle, a very tight space with little free air due to the breaker. The arc was able to ionize the limited air volume to a temperature necessary to sustain the arc).

It should be noted that this portion of load center (i.e., breaker finger stabs) is composed of copper before they transition to the main bus bars (irrespective of the balance of the load center current carrying conductor materials (e.g., aluminum, copper)). There is no known use of aluminum as a medium in the circuit breaker connection stab finger design.

With respect to the load center main bus bar compartment where the main bus bars are located, this is a much larger compartment of free volume. Even if an arc were to develop between bus bars, the driving arc voltage is too low for a long arc length. In addition, there is much more air needing to be ionized to achieve an equilibrium necessary to sustain the arc for a long period of time. Additionally, the arc tends to travel quickly along the main bus bars away from the source until the end of the bus bars are reached where the arc length increases and self-extinguishes.

This rapid, self-extinguishing arcing behavior was observed in several of the 2019 NRC's low voltage tests [33] on the same test unit with arc initiation wire placed in multiple locations throughout the load center main bus. Only one specific test was able to sustain an arc for the intended 8 seconds, where the voltage and current were increased to a level that would challenge realism when factoring in transformer size and protection settings. For example, based on a review of several protection and coordination calculations, for a 1,500 kVA transformer, the fault is expected to clear by the upstream medium voltage branch circuit breaker or transformer protection within 3.5 seconds for a fault magnitude of 20 kA (or more). A test was performed at 600 Vac at 19.4 kA which is 4.4 kA greater than 15 kA typically cleared in 8 seconds (or less) for a 1,500 kVA transformer. Therefore, a fault is expected to be isolated in significantly less than 8 seconds for a fault current of 19.4 kA given transformers smaller than 1,500 kVA (based on arc wire location being on the main bus bars downstream of the supply breaker).

However, for cases in which a larger 2,500 kVA transformer is utilized it may be possible to see fault currents at the 25 kA level for 8 seconds if the load center supply circuit breaker is failed (stuck). It is expected that at fault currents of this magnitude, the fault would be cleared by the upstream transformer protection (i.e., some overlap in low voltage bus supply circuit breaker and transformer protection time overcurrent TCC curves).

Therefore, for fault currents that exceed the tripping threshold in the rapid clearing part of the time overcurrent relay, then the backup protection can be considered the dedicated load center transformer protection scheme and the fault terminated within the given long time overcurrent tripping characteristics of the 51 relay protecting the transformer.

3.11.2 Zone 3 Operating Experience

Both load center HEAF events originated in the load center bus supply circuit breaker. Therefore, the low voltage bus supply breaker could not be credited to isolate the fault (and treated as "stuck"). Since the arc was on the line supply side of the circuit breaker it would require upstream protection to clear the fault. It was reported that the current was too low to trip the remaining upstream active protection (e.g., upstream load center transformer protection circuit breaker); therefore, for these type of faults (originating as high impedance faults inside the supply circuit breaker cubicle/breaker connection stabs), there is no credited protection available for these low currents. For fault currents that are less than the tripping threshold in the

rapid clearing part of the time overcurrent relay, the fault must either self-extinguish or be manually interrupted based on operator action.

No reported OE exists where load center HEAFs originated in the main bus bar or runback bus bar compartments.

3.11.3 Zone 3 Fault Progression

The fault progression for a load center supply circuit breaker is explained below:

- For fault currents that exceed the tripping threshold in the rapid clearing part of the transformer time overcurrent relay (51), then the backup can be considered the dedicated load center transformer protection scheme and fault terminated within 2 seconds (see discussion of Zone BD2). This is greater than the general design capability of a load center to sustain a 0.5 s duration of rated fault current; however per IEEE [34]; faults terminated in less than 2 seconds are within the low energy output level in which NRC test results of LV switchgear show that damage at this duration does not represent a HEAF damage state [33].

- For fault currents that are less than tripping threshold in the rapid clearing part of the transformer protection time overcurrent relay, then the possibility of long duration faults greater than 2 seconds (event 50935 lasted up to 41 seconds at a fault current under the tripping threshold). However, under these circumstances, total integrated arc energy levels are expected to be no greater than 90 MJ (see Section 7.2).

The fault progression for a load center main bus bar fault is explained below:

- Based on OE, no self-sustaining low voltage faults were observed on the main bus bars resulting in a HEAF. However, with the failure of the load center supply circuit breaker to trip (stuck closed) it is theoretically possible to produce an arc fault of sufficient resistance to not trip in the rapid clearing part of the transformer time overcurrent (51) relay but be of a high enough level of current at a long enough duration to introduce arc damage, but below the threshold of a HEAF. However, under these circumstances, total integrated arc energy levels are expected to be no greater than 90 MJ (see Section 7.2).

- For faults in which the load center supply breaker is stuck, but the fault currents <u>exceed</u> the tripping threshold in the rapid clearing part of the transformer time overcurrent relay, then the backup can be considered the dedicated load center transformer protection scheme and fault terminated within 2 seconds, this is greater than the general design capability of load center of 0.5 seconds per IEEE [34], however faults terminated in less than 2 seconds are within the low energy output level in which recent NRC test results of LV switchgear [33] show that damage at this duration does not represent a HEAF.

- For cases in which there is not a stuck closed load center supply circuit breaker, then the fault is expected to clear rapidly by the load center supply low voltage power circuit breaker (LVPCB) short time delay for low-impedance faults (0.5 s (IEEE Standard C37.20.1 [34])).

The fault progression for a load center load circuit breaker fault is explained below:

- Based on OE, no self-sustaining low voltage fault were observed on the load circuit breakers or load side connections causing a HEAF. However, with the failure of the load center supply circuit breaker to trip (stuck closed) and the fault initiating at the stuck closed load circuit breaker, it is theoretically possible to produce an arc fault of sufficient resistance to not trip the rapid clearing part of the transformer time overcurrent (51) relay but be of a high enough level of current at a long enough duration to introduce arc damage, but below the threshold of a HEAF. However, under these circumstances, total integrated arc energy levels are expected to be no greater than 90 MJ (see Section 7.2).

- For faults in which the load center supply circuit breaker and load circuit breaker is stuck closed, but the fault currents exceed the tripping threshold in the rapid clearing part of the transformer protection time overcurrent relay, then the backup can be considered the dedicated load center transformer protection scheme and fault terminated within 2 seconds; however faults terminated in less than 2 seconds are within the low energy output level in which recent NRC test results of LV switchgear show that damage at this duration does not represent a HEAF.

- For cases in where at least one of the load center circuit breakers (supply or load) properly trips to isolate the fault, then the fault is expected to clear rapidly by the load center supply LVPCB short time delay for low-impedance faults (0.5 s (IEEE Standard C37.20.1 [34])).

3.11.4 Zone 3 Fault Duration Summary

Table 3-11 documents the fault progression for Zone 3.

Table 3-12
Zone 3 Fault Progression

Initiation Location	Fault Description	Duration
Zone 3 supply side fault	Fault current exceeding the tripping threshold of the transformer time overcurrent relay	≤ 2 s
	Fault current lower than the tripping threshold of the transformer time overcurrent relay	Dependent upon fault current (≤ 90 MJ)
Zone 3 main bus bar fault	Functional load center supply bus breaker	0.5 s
	"Stuck" load center supply bus breaker and a fault current exceeding the tripping threshold of the transformer time overcurrent relay	≤ 2 s
	"Stuck" load center supply bus breaker and a fault current lower than the tripping threshold of the transformer time overcurrent relay	Dependent upon fault current (≤ 90 MJ)
Zone 3 load side fault	Functional load breaker or supply bus breaker	0.5 s
	"Stuck" supply bus breaker and a fault current exceeding the tripping threshold of the transformer time overcurrent relay	≤ 2 s
	"Stuck" supply bus breaker and a fault current lower than the tripping threshold of the transformer time overcurrent relay	Dependent upon fault current (≤ 90 MJ)

The fault durations in Zone 3 are presented in Figure 3-23.

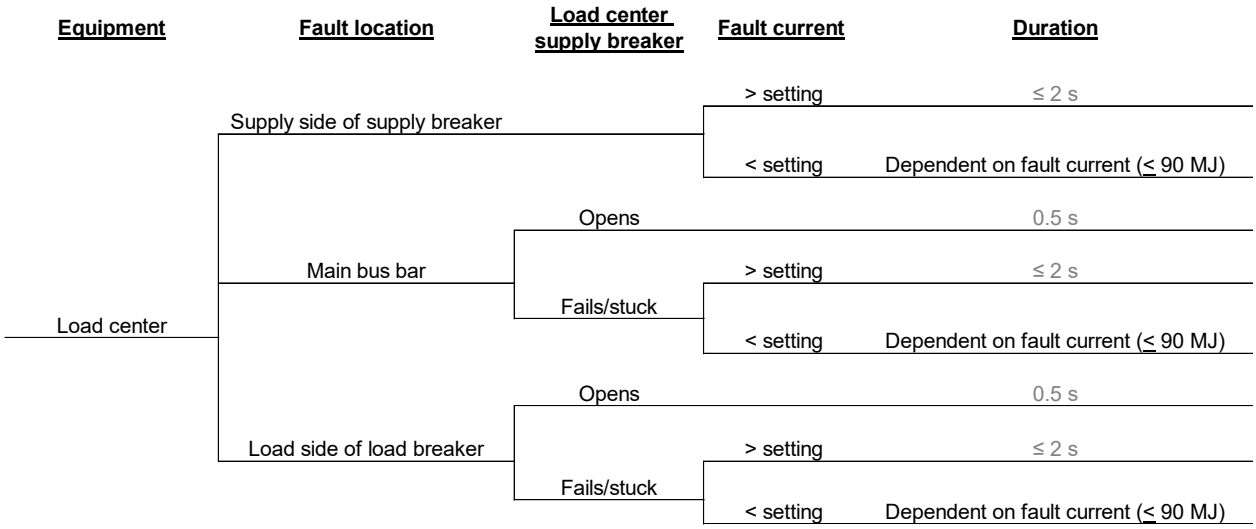

Figure 3-23
Zone 3 Fault Progression Tree

4
U.S. NUCLEAR POWER PLANT ELECTRICAL DISTRIBUTION SYSTEM HEAF OPERATING EXPERIENCE

This section consolidates pertinent aspects of insight with respect to high energy arcing fault (HEAF) events. The EPRI fire events database (FEDB) documents 23 HEAFs during the period of 1979 to 2021 [35, 36]. Unlike arc flash events, HEAF events release significantly more energy and may result in extensive equipment damage that can challenge plant operation.

This section provides insights into these events, specifically for the determination of HEAF end states and frequencies. This section consists of the four sub-sections listed below.

- Section 4.1: HEAF event overview/commonality observations
- Section 4.2: HEAF events where protective devices worked as designed
- Section 4.3: HEAF events with protective device failures
- Section 4.4: HEAF events where currents were too low for isolation by protective devices

Table 4-1 summarizes the HEAF events considered in the calculation of HEAF frequencies. These events have been reviewed by the working group and determined to meet the threshold for inclusion in the HEAF-related frequency bins. Table 4-1 identifies the FEDB identifier (event ID), the date of the event, the equipment and ignition source bin, and identifies notable themes on the event that are reviewed in the following sections.

Table 4-1
Summary of HEAF Events Considered

Event ID	Date	Location	HEAF Characteristics
575	03/19/1987	NSBD (Bin 16.1-1)	Generator fed fault (Table 4-2) Protective device/scheme operated correctly (Section 4.2 and Table 4-3)
922	07/10/1987	NSBD (Bin 16.1-1)	Generator fed fault (Table 4-2) Protective device/scheme operated correctly (Section 4.2 and Table 4-3)
678	03/02/1988	NSBD (Bin 16.1-1)	Generator fed fault (Table 4-2) Protective device/scheme operated correctly (Section 4.2 and Table 4-3)
100	05/15/2000	NSBD (Bin 16.1)	Generator fed fault (Table 4-2) Protective device/scheme operated correctly (Section 4.2 and Table 4-3)

Table 4-1 Summary of HEAF Events Considered (cont.)

Event ID	Date	Location	HEAF Characteristics
10584	07/27/2008	NSBD (Bin 16.1-1)	Protective device/scheme operated correctly (Section 4.2 and Table 4-3)
162	08/05/2009	NSBD (Bin 16.1-1)	Generator fed fault (Table 4-2) Protective device/scheme operated correctly (Section 4.2 and Table 4-3)
50909	03/07/2010	NSBD (Bin 16.1-2)	Protective device/scheme operated correctly (Section 4.2 and Table 4-3)
50926	02/12/2011	NSBD (Bin 16.1-2)	Protective device failure (Section 4.3 and Table 4-4)
51291	12/09/2013	NSBD (Bin 16.1-1)	Generator fed fault (Table 4-2) Protective device failure (Section 4.3, and Table 4-4)
51764	01/17/2017	NSBD (Bin 16.1-1)	Protective device/scheme operated correctly (Section 4.2 and Table 4-3)
51765	12/16/2020	NSBD (Bin 16.1-1)	Generator fed fault (Table 4-2) Protective device/scheme operated correctly (Section 4.2 and Table 4-3)
929	10/09/1989	IPBD (Bin 16.2)	Generator fed fault (Table 4-2) Protective device/scheme operated correctly (Section 4.2 and Table 4-3)
127	06/18/2004	IPBD (Bin 16.2)	Generator fed fault (Table 4-2) Protective device/scheme operated correctly (Section 4.2 and Table 4-3)
51199	07/26/2013	IPBD (Bin 16.2)	Generator fed fault (Table 4-2) Protective device/scheme operated correctly (Section 4.2 and Table 4-3)
434	08/02/1984	LVSWGR (Bin 16.a)	Current lower than isolation protection device (Section 4.4 and Table 4-5)
50935	06/07/2011	LVSWGR (Bin 16.a)	Current lower than isolation protection device (Section 4.4 and Table 4-5)
732	07/06/1988	MVSWGR (Bin 16.b)	Protective device/scheme operated correctly (Section 4.2 and Table 4-3)
947	01/03/1989	MVSWGR (Bin 16.b)	Generator fed fault (Table 4-2) Protective device/scheme operated correctly (Section 4.2 and Table 4-3)
74	06/10/1995	MVSWGR (Bin 16.b)	Generator fed fault (Table 4-2) Protective device/scheme operated correctly (Section 4.2 and Table 4-3)

Table 4-1 Summary of HEAF Events Considered (cont.)

Event ID	Date	Location	HEAF Characteristics
106	02/03/2001	MVSWGR (Bin 16.b)	Generator fed fault (Table 4-2) Protective device/scheme operated correctly (Section 4.2 and Table 4-3)
112	08/03/2001	MVSWGR (Bin 16.b)	Generator fed fault (Table 4-2) Protective device/scheme operated correctly (Section 4.2 and Table 4-3)
50910 (first event)	03/28/2010	MVSWGR (Bin 16.b)	Protective device failure (Section 4.3 and Table 4-4)
50910 (second event)	03/28/2010	MVSWGR (Bin 16.b)	Protective device failure (Section 4.3 and Table 4-4)

4.1 Overview/Commonality Observations

The majority of HEAFs occurred within the non-Class 1E and power production portions of the electrical distribution system (EDS):

1. 22 of the HEAF events were on non-Class 1E systems
2. 1 HEAF event was on the low voltage Class 1E system

A commonality associated with HEAFs that originated within switchgear (MV and LV) was that the majority of these HEAFs originated with the switchgear supply breaker (five out of seven events). The reasons for this can be concluded from:

1. Switchgear protective device settings must be selectively coordinated with all (including the largest) load breakers. By default, supply breakers do not contain an instantaneous trip element (IEEE/ANSI 50 relay). In terms of the energy delivered (RI^2t), for example, supply circuit breakers allow a greater amount of energy to feed a fault than a load breaker, as much as 40 times more energy (e.g., 120 cycles (supply) for fault interruptions versus 3 cycles (load)).
2. Switchgear arcing events have happened with load breakers. However, given the speed of load breaker interruption (e.g., 3 cycles) due to the instantaneous overcurrent relays (IEEE/ANSI 51 relay), these are limited to arc-flash events and do not escalate to HEAF events.

Out of 23 events, at least 14 (61%) originated within the unit-connected design as defined in EPRI 3002015992 [12] and resulted in generator fed HEAF faults for an estimated duration range of 4 to 15 seconds:

- Three events originated in the iso-phase bus duct (Bin 16.2)
- Seven events originated in Bin 16.1, non-segregated bus duct (NSBD), downstream of the unit auxiliary transformer (UAT) secondary/tertiary and upstream of the switchgear bus supply circuit breaker)

- Three of these events consisted of switchgear bus supply circuit breaker failures that were involved with an active bus transfer at the time (these were as a result of manual bus transfers from offsite power to the generator fed UAT during power ascension activities).
- One of these events occurred as part of an automatic bus transfer failure at 100% power due to a grid response.

Of these 14 events, there was no breaker available to isolate the coast down energy of the generator from feeding these faults.

The other nine HEAF events had variable circumstances:

- Two medium voltage non-segregated bus duct events were fed from the offsite power (SAT).
- Three were due to failed primary electrical protection:
    - Medium voltage switchgear upstream circuit breaker had no DC control/trip power due to failed fuse (stuck breaker) – 2 events.
    - Low voltage non-segregated bus duct failure due to failed protection (mechanical failure of 86 lockout device).
- Two low voltage events involving the load center main bus supply circuit breaker. The HEAF energy was primarily due to the time component (duration) as the fault current was too low for the upstream protection to isolate the fault in a timely manner:
    - Manually isolated by opening upstream transformer circuit breaker by operations after 41 seconds
    - Self-extinguished before overcurrent (51) relay timed out.
- One primary cable compartment bus bar HEAF without a circuit breaker. This was a bus- tie and the upstream bus supply circuit breaker operated per design.
- One lower-tier medium voltage non-segregated bus duct had one circuit breaker downstream of the UAT. The upstream bus supply breaker operated per design.

Table 4-2 lists the generator fed events and provides the originating equipment. Additional detail for each event is also provided.

Table 4-2
Generator Fed HEAF Events

Event ID	Date	Equipment	Additional Information
51199	7/26/2013	IPBD	Generator fed fault for ~ 10 seconds
929	10/9/1989	IPBD	Fault within the iso-phase bus duct
127	6/18/2004	IPBD	Fault started in the IPBD at the main transformer low voltage bushing box.
51291	12/9/2013	NSBD	Reported duration: 4 – 5 seconds until UAT exploded (Note: UAT Protection was disabled (87 trip leads lifted). Fault detected 6 seconds later by upstream unit differential protection (387) and initiated generator lockout).
162	8/5/2009	NSBD	Between UAT and switchgear bus supply breaker
100	5/15/2000	NSBD	Between UAT and switchgear bus supply breaker
678	3/2/1988	NSBD	10 feet damage & adjacent cables
922	7/10/1987	NSBD	30 feet damage
575	3/19/1987	NSBD	Damage to both 4kV & 6.9kV non-segregated bus ducts
51765	12/16/2021	NSBD	Damage limited to the NSBD
112	8/3/2001	SWGR	Bus transfer failure (supply breaker from UAT)
106	2/3/2001	SWGR	Catastrophic breaker fault
74	6/10/1995	SWGR	Bus transfer failure (supply breaker from UAT)
947	1/3/1989	SWGR	Integrated control system (ICS) damage

4.2 HEAF Events Where Protective Devices Worked as Designed

The HEAF events are reviewed to document fault location and duration for 17 of the 23 events where it was assessed that the protection schemes operated as expected.

The HEAF duration is based on the maximum expected speed of the protective device/scheme reported in the OPEX (see notes prior to Table 4-3).

The speed of the protective device does not always define the duration of a HEAF event. The most commonly observed scenario is a generator fed fault. Even though the protection system immediately detects and rapidly initiates a generator protection lockout (tripping switchyard breakers and generator exciter field breaker in cycles), the generator continues to feed the fault through the UAT until the arc voltage collapses and can no longer sustain the fault. Generator fed faults are given the range of 4 to 15 seconds.

However, outside of generator fed faults, absence of explicit HEAF duration in the OPEX, the default HEAF duration is considered to be the maximum expected time for the protection device/scheme to act.

Table 4-3 is ordered by:

- HEAF events that are interrupted by the protective device/scheme (PDS) and then grouped by location with the EDS (HEAF ignition source bins)
- Generator fed faults are at the end of the table and then grouped by location within the EDS (HEAF ignition source bins)

A few of the HEAF event descriptions provide the actual PDS operating time. However, many of the events reported the protection scheme that detected the fault and operated (e.g., main generator protection, transformer differential protection/lockout, bus supply breaker overcurrent). The following are typical/conservative assumptions on the speed of the protective device(s)/scheme assuming proper operation:

- Main generator protection: 5 to 8 cycles (within 0.15 seconds)
- Differential/lockout protection: 5 to 8 cycles (within 0.15 seconds)
- Load breaker (e.g., motor): 5 to 8 cycles (within 0.15 seconds)
- Instantaneous overcurrent (IOC – ANSI 50 Device): 3 to 8 cycles (within 0.15 seconds)
- Timed overcurrent (TOC – ANSI 51 Device): variable[5]
- If overcurrent trip description does not distinguish between TOC and IOC: (within 4 seconds)
- Bus supply breaker is assumed to be selectively coordinated with associated downstream load protective devices for motors, transformers (load centers) which will introduce additional layers of protection than just the final load breaker – the maximum coordinated time overcurrent relay (51) delay for these breakers: within 4 seconds
- Other: Some of the event descriptions only provide “protection cleared the fault before major damage”, “fault cleared quickly”. It does not identify the protection scheme that operated or duration. In these cases, the delay is assumed to be within 2 seconds.
- Undervoltage relays have been reported to operate due to depressed voltage during the fault. Some are inherently instantaneous, other stations insert a short time delay to ride through anticipated transients (e.g., line switching, lightning), and may have up to a ¾ second delay (within 0.75 seconds).

[5] Assumed within 4 seconds for switchgear bus supply circuit breaker downstream of an auxiliary power transformer and 2 seconds for switchgear bus supply circuit breaker downstream of an intermediate medium voltage switchgear.

Table 4-3
17 out of 23 Events Where Protective Device/Scheme (PDS) Operated Correctly

Event ID	Date	HEAF Location	Protective Device/Scheme	PDS Speed	Damage/Notes
51764	1/17/2017	NSBD	Time overcurrent	~1 second	1. HEAF duration = PDS speed 2. Power alignment: offsite power (ESST)
50909	3/7/2010	NSBD	(Ground fault) and lockout bus overcurrent relays	≤ 2 seconds	1. HEAF duration = PDS Speed 2. NSBD purpose is bus tie and downstream of intermediate switchgear bus supply circuit breaker fed from UAT 3. Damage was limited to faulted section of bus duct 3. Successful opening of UAT bus supply breaker to bus/NSBD
10584	7/27/2008	NSBD	Relay operation resulted in clearing of the 161 kV line (operated per MCR annunciation)	≤ 2 seconds	1. HEAF duration = PDS Speed 2. Power alignment: offsite power Outdoors: Damage was identified as failed bus work between cooling tower transformer 'A' and the C and D cooling tower switchgear (failed flex link).
732	7/6/1988	SWGR powered by SAT: Bus cross-tie breaker closed in on fault by operations	Timed overcurrent	~1.15 sec	1. HEAF duration: ~ 1.15 s 2. 3-phase fault (this event is counted as Bin 16.b HEAF)
51199	7/26/2013	IPBD	Unit differential trip & main generator lockout (386)	0.33 seconds [20 cycles]	HEAF duration: 4 – 15 s (generator fed fault) Fault followed routine monthly IPBD cooling fan swap (dislodged backdraft damper blade)
929	10/09/1989	IPBD	Main generator and transformer differential protection	< 0.15 second	HEAF duration: 4 – 15 s (generator fed fault)
127	6/18/2004	IPBD	Main generator protection	< 0.15 second	HEAF duration: 4 – 15 s (generator fed fault)
162	8/5/2009	NSBD	Main generator differential lockout	< 0.15 second	HEAF duration: 4 – 15 s (generator fed fault)
100	05/15/2000	NSBD	Main generator (differential) protection (immediate trip)	< 0.15 second	HEAF duration: 4 – 15 s (generator fed fault)
678	3/2/1988	NSBD	Differential protection immediately cleared fault	< 0.15 second	HEAF duration: 4 – 15 s (generator fed fault)

Table 4-3 17 out of 23 Events Where Protective Device/Scheme (PDS) Operated Correctly (cont.)

Event ID	Date	HEAF Location	Protective Device/Scheme	PDS Speed	Damage/Notes
922	7/10/1987	NSBD	Available documentation does not address protection actuation (assumed differential protection operated similar to event 678)	< 0.15 second	HEAF duration: 4 – 15 s (generator fed fault)
575	3/19/1987	NSBD	Differential protection immediately actuated	< 0.15 second	HEAF duration: 4 – 15 s (generator fed fault) The destructive nature of the fault hampered investigation; not known which bus duct (4kV or 6.9kV) the initial fault occurred.
51765	12/16/2021	NSBD	Differential protection immediately actuated	0.15 second	HEAF duration: 4 – 15 s (generator fed fault)
112	8/3/2001	SWGR: bus supply circuit breaker from UAT/MAT (primary stabs)	Generator transformer protection scheme, including Bus 12-4 Lockout**	< 0.15 second	HEAF duration: 4 – 15 s (generator fed fault) Bus transfer failure
106	2/3/2001	SWGR: bus supply circuit breaker: [consequential 2nd fault in RAT breaker cubicle]	UAT differential & overload protection**	< 0.15 second	HEAF duration: 4 – 15 s(generator fed fault) Bus transfer failure
74	6/10/1995	SWGR: Supply breaker from UAT	Main generator protection scheme	< 0.15 second	HEAF duration: 4 – 15 s (generator fed fault) Note: Fast dead bus transfer scheme failure (UAT and start-up transformer (SUT) unintentionally paralleled on switchgear bus.
947	1/3/1989	SWGR: cause of failure unknown; however, bus transfer was in progress**	UAT (1T) Φ differential alarms, generator lockout and turbine trip**	< 0.15 s	HEAF duration: 4 – 15 s (generator fed fault) [ICS cable damage].

**Active manual bus transfer by operations from Offsite Power to the UAT in support of startup/power ascension at time of HEAF event.

4.3 HEAF Events with Protective Device Failures

Four HEAF events reported failures of the primary protection scheme resulting in extended HEAF durations beyond the equipment rating of the equipment. One resulted in a generator fed fault with significant damage (UAT catastrophic failure).

Table 4-4
Four Out of 23 HEAF Events With Protective Device Failures

FEDB ID	Date	Location	HEAF Duration	Protection Failures
51291	12/9/2013	NSBD	6 seconds (Generator was still on-line: both the generator and switchyard were feeding the HEAF through UAT)	1. **Primary:** UAT differential relay (187AT) trip leads were disconnected (non-functional). If functional, would have initiated generator lockout in 6 cycles (0.1 seconds). 2. **Backup:** Per sequence of events (SOE), the unit differential relay (387) actuated in 6 seconds into the event and successfully initiated the generator lockout; however, by that time UAT catastrophically failed. 3. **Generator Fed Fault:** did not commence until after 6 seconds; however, by this time the decaying generator energy was feeding the UAT fault/fire not the NSBD.
50926	2/12/2011	NSBD [480Vac]	12 seconds	1. **Primary:** Protective relay failed to initiate a trip due to mechanical binding of the 86 lockout relay latch mechanism. 2. Fault cleared itself after 12 seconds.
50910 (two events)	3/28/2010	1. cable (switchgear source of power) 2. Switchgear tie breaker	1st Event: 20 seconds 2nd Event: 3 minutes [initially, the fault current was too low to trip 52/19 until the arc flash occurred 3 minutes later]	**First fault:** **Primary:** Loss of DC control power resulted in breaker 52/24 failing to open and clear fault (failed DC control fuse: maintenance oversight). **Secondary:** Protection from upstream breaker 52/20 began timing but did not operate in sufficient time to prevent UAT failure (sudden pressure relay actuated). UAT may have had pre-existing vulnerability, or the backup protection (breaker 52/20) was not optimally set to protect UAT from excessive let-through current. Bus 4 transferred from UAT to SUT and fault cleared by cross-tie breaker 52/19 protective overcurrent device. **Second fault:** **Primary:** An attempted generator lockout reset resulted in a 2nd HEAF event (UAT sudden pressure relay (SPR) signal still present and lockout re-actuated). Power (from the SAT) again flowed through the stuck 52/24 breaker feeding the cable fault until the stuck 52/24 breaker thermally failed and breached the rear switchgear cabinet. **Secondary:** Backup/bus-tie breaker 52/19 cleared the fault (second time) via time overcurrent (51) relay.

4.4 HEAF Events Where Currents Were Too Low for Isolation by Protective Devices

In one of two events, the current was too low for isolation by the primary protective device requiring manual isolation by operations. The damage caused by the HEAF was primarily caused by the extended duration of the fault.

Table 4-5
Two Out of 23 HEAF Events Where Currents Were too Low for Protective Device Operation

Event ID	Date	Location	Summary	Damage
50935	6/7/2011	Load center: supply breaker (Class 1E, 480 VAC)	HEAF duration: 41 seconds: Fault originated at the bus supply circuit breaker copper stab connections (line side) and propagated to phases A and B of the main bus bars. The fault lasted approximately 41 seconds. Operators had to manually open the 4160 Vac bus supply circuit breaker upstream of the faulted breaker to de-energize the 1B4A bus [54]. The data from FEDB 50935 event was reviewed, and the fault current ranged from 1.5 kA to 4.8 kA. It was concluded that the circuit breaker did not trip earlier than 41 seconds due to the low arcing fault current being significantly lower than the setting of the time overcurrent (51) relay located on the upstream 4160 V circuit breaker feed to the load center transformer.	Major damage to 480V incoming breaker and breaker cubicle in 480 V load center due to high resistance connection at breaker stabs
434	8/2/1984	Load center: supply breaker (480 VAC)	HEAF duration: unknown <u>Sequence of events:</u> 1. 1st Relay sensed fault current between No. 4 SST and 480VAC load center and trips breaker. a. Since fault was on incoming side of the breaker, system continued to feed the fault. 2. 2nd relay between No. 1 and No. 4 SSTs sensed fault; however, fault cleared itself by melting the connection between the circuit breaker and the incoming cables.	Damage localized to load center

5
HIGH ENERGY ARCING FAULT IGNITION FREQUENCY AND SUPPRESSION RATE

This section identifies the 1) HEAF ignition source bins, 2) the counting guidance for apportioning the generic frequencies to individual equipment, 3) the generic HEAF ignition frequency for each bin, and 4) the HEAF manual non-suppression rate.

5.1 HEAF Ignition Source Definitions

NUREG/CR-6850 Supplement 1 [2] defined four ignition source bins to capture the range of HEAF experience. No unique HEAF ignition sources are added based on this research. However, this research split Bin 16.1 into two bins (now Bin 16.1-1 and 16.1-2).

Switchgear and Load Centers

16.a HEAF for low-voltage electrical cabinets (480 – 1,000 V): High energy arcing faults associated with load centers.

16.b HEAF for medium-voltage electrical cabinets (above 1,000 V): High energy arcing faults associated with switchgear.

Electrical cabinets can also have a thermal fire, and these fires are treated separately to the HEAF failure mode. NUREG/CR-6850 Supplement 1, which clarified several aspects of the HEAF modeling, states “the intent of the HEAF analysis (per Appendix M of EPRI 1011989, NUREG/CR-6850), is the capture of “higher-consequence” events that may have a *substantive impact outside the cabinet of origin*. Other arc fault events (e.g., events that did not lead to an impact outside the originated panel) are already treated via the general electrical panel fire frequency, and this treatment need not be adjusted. Only the “higher-consequence” events are under question”. The industry has observed events that resulted in an “arc blast”, in which the originating cubicle experienced pressure effects. The duration of these events are typically under two seconds and have not resulted in an ensuing fire. These events are screened from the HEAF analysis, which captures the higher consequence events which have a blast and a fire. Additionally, arc flash events are not counted towards Bin 16.a and 16.b ignition frequencies.

Bus Ducts

16.1-1 Segmented (non-segregated) bus ducts: High energy arcing faults associated with segmented bus duct located in Zone BDUAT and Zone BDSAT.

16.1-2 Segmented (non-segregated) bus ducts: High energy arcing faults associated with segmented bus duct located in Zone BD1, Zone BD2, and Zone LVBD.

NUREG/CR-6850 Supplement 1 [2] categorized bus ducts into one of four types (the fourth identified as iso-phase bus ducts in Bin 16.2). Category 1: non-segmented or continuous bus duct HEAFs are typically treated with the end device and Category 3: cable ducts are not in scope of the HEAF analysis. The treatment of Category 2: Segmented bus ducts is the focus of NUREG/CR-6850 Supplement 1, as outlined:

A bus duct where the bus bars are made up of multiple sections bolted together at regular intervals (transition points). Here, the bus bars are contained within open-ended sections of metal covers that are bolted together to form a continuous grounded enclosure running the full distance between termination points. Segmented bus ducts are used in cases where the required lengths and/or geometries make the use of non-segmented bus ducts (NSBD) impractical.

Applying the guidance developed as part of this methodology results in splitting bin 16.1 into two generic fire ignition frequency bins for NSBD based on the generic HEAF zones. This separation is made to better match the observations in the operational experience; most NSBD HEAFs occur in zones BDUAT and BDSAT. It is also recognized that the length of NSBD in various zones may differ among the industry. Therefore, the development of a specific generic ignition frequency for NSBD in Zone BDUAT and BDSAT limits the opportunity of inappropriately biasing the ignition frequency should a bulk of the NSBD length be located in other zones.

16.2 Iso-phase bus ducts: A bus duct where the bus bars for each phase are separately enclosed in their own protective housing (segregated bus ducts). The primary use of iso-phase buses is generally limited to the bus work connecting the main generator to the main and auxiliary transformers.

5.2 Ignition Source Counting Guidance for HEAFs

As noted in NUREG/CR-6850 [1] and the Supplement [2], switchgear, load centers, and bus bars/ducts with energies of 440 VAC and greater are subject to HEAFs. This section provides updated counting guidance for the HEAF ignition sources.

5.2.1 Bin 16.a: HEAFs for Low-Voltage Panels (480 – 1,000 VAC)

5.2.1.1 Insights from Operating Experience

In NUREG/CR-6850, the counting guidance for HEAFs directed the analyst to count by vertical section. Under NUREG/CR-6850, each vertical section has an equal likelihood of ignition. The two low voltage HEAF events are reviewed to determine the location within the switchgear and the subcomponent. As shown in Table 5-1, the events occurred within the supply cubicle portions of the load centers. Load centers have at least one and potentially two supply cubicles throughout the switchgear. The revised counting guidance in Section 5.2.1.2 more accurately apportions the 16.a frequency (as the operating experience does not support equal weight to vertical sections).

Table 5-1
Location of Load Center HEAFs

FEDB ID	Date	Bin	Supply or load	Fault location
434	08/02/1984	16.a	Supply	Breaker
50935	06/07/2011	16.a	Supply	Breaker

No low-voltage (load center) main bus bar compartment HEAF events have occurred in US operating history. The only two low-voltage HEAFs occurred at the circuit breaker copper stab connections.

Testing of a major US brand of load center failed to achieve a sustainable arc at 480 VAC when initiated at the bus bars inside the main bus or runback compartments. Two separate test

programs [7, 33] produced similar results in that the arc initiated at the main bus bars either self-extinguished prematurely or experienced chaotic arc migration in nine out of nine tests. A bus arc could be sustained at 600VAC, but only in a limited location of the main bus compartment. At other locations, the arc self-extinguished in three out of the five 600Vac bus bar tests. A summary of physical construction and test experience that provides insights on the difficulty in sustaining an arc is provided in the bullets below:

- If there is no barrier to impede arc travel, the magnetic forces will propel the arc to the ends of the bus bars, where the arc elongates until the arc lengths exceed the ability to sustain and self-extinguish.
- If the arc encounters a barrier, the arc travel is impeded, where the rapid ionization of trapped gases can sustain the arc.
- Tests that could successfully sustain an arc at 480 VAC in the main bus compartment were of international design/construction, where either:
    - the main bus bars were enclosed in a confined space, or
    - multiple barriers existed in the main bus bar compartment, with at least one barrier that would impede the direction of arc travel away from the source before reaching the end of the main bus bars.
- The three major US load center manufacturers construct their main bus compartments similarly with respect to (1) significant free volume and (2) absence of barriers that would impede arc travel.

The low voltage electrical distribution system is stepped down from the medium voltage system by a load center transformer. In most cases, there is one transformer per load center. In a few cases, a medium voltage branch circuit may feed two or three load centers.

The typical electrical arrangement is that the transformer secondary circuit breaker is also the load center supply circuit breaker. There may be cases where there is no secondary breaker (the load center supply circuit breaker is the same as the load center transformer upstream medium voltage circuit breaker). The transformer also has a primary side circuit breaker. Assuming a failure in the load center also disables the supply circuit breaker (that is, does not open under faulted conditions) the demand would be placed on the load center's transformer primary side circuit breaker to interrupt the fault.

Since most load centers have a dedicated transformer, there are no coordination requirements between the transformer primary and load center supply circuit breakers in the time overcurrent region. In most cases, the load center supply circuit breaker is set to operate faster than the transformer primary circuit breaker, but in a few cases, the transformer primary circuit breaker may be faster (or may be the only circuit breaker). Nonetheless, the load center transformer primary circuit breaker may be considered a backup to a stuck load center supply circuit breaker.

Therefore, HEAFs in load centers (480 VAC and 600 VAC) – should only be postulated in the supply circuit breaker cubicles given that:

- The presence of instantaneous time overcurrent (50) relays limit the fault duration downstream of the load center supply breakers
- The two load center HEAF events occurred in the load center supply circuit breaker
- Experimental testing has consistently shown it is difficult to maintain an arc below the supply breaker in U.S. load center configurations and designs

  - The main bus bar compartment is a much larger compartment of free volume creating challenging conditions for the development of a long duration arc.
- The general power distribution arrangement of U.S. nuclear power plants:
  - The supply breaker in a load center will limit the fault current and duration of a fault on and below the bus bars to levels lower than what is sufficient to create a HEAF level consequences, and
  - Is not susceptible to generator fed faults.

5.2.1.2 Fire PRA Counting Guidance for Load Centers

Counting of bin 16.a load centers (also referred to as low voltage switchgear), differs from the counting guidance associated with Bin 15 - electrical cabinets (which is per vertical section) and the HEAF methodology in NUREG/CR-6850 [1].

For ignition frequency apportionment, only count the load center supply breakers for HEAF susceptibility. Based on the discussions in Section 3.11.2 and Section 4.4 the most likely location of load center HEAFs is in the supply circuit breaker. For the remaining locations:

- The presence of instantaneous time overcurrent (51) relays limit the fault duration downstream of the load center supply breakers.
- The main bus bar compartment is a much larger compartment of free volume creating challenging conditions for the development and sustainability of long duration arc.
- While it is theoretically possible to produce an arc fault of sufficient resistance to not trip the rapid clearing part of the transformer time overcurrent (51) relay in the case where a supply circuit breaker trips (stuck closed) and the fault initiates at a stuck closed load circuit breaker, the fault would be of a high enough level of current at a long enough duration to introduce arc damage, but below the threshold of a HEAF.

Figure 5-1 has three supply breakers shown in red. Under the new counting guidance, the fire PRA count for load centers is 3.

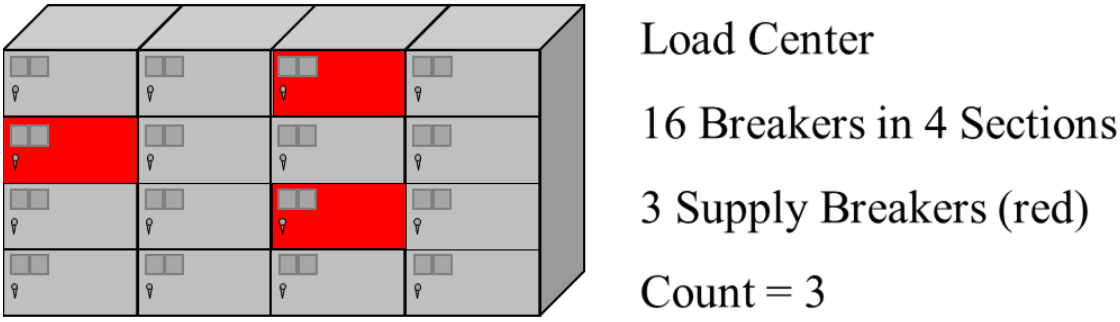

Figure 5-1
Counting of Bin 16.a Load Centers (Modified from Figure 3-1 in Supplement 1 to NUREG/CR-6850)

There may be configurations that do not have a supply circuit breaker located between the secondary side of the step-down transformer and the main bus bar of a load center (see Figure 5-2). If there is no supply circuit breaker for the load center, do not count as a HEAF (Bin 16.a) ignition source. The reported load center HEAFs occurred on the supply circuit breaker stabs. In

conclusion, for load center HEAFs without supply circuit breakers – the analyst should not count or assign a ZOI.

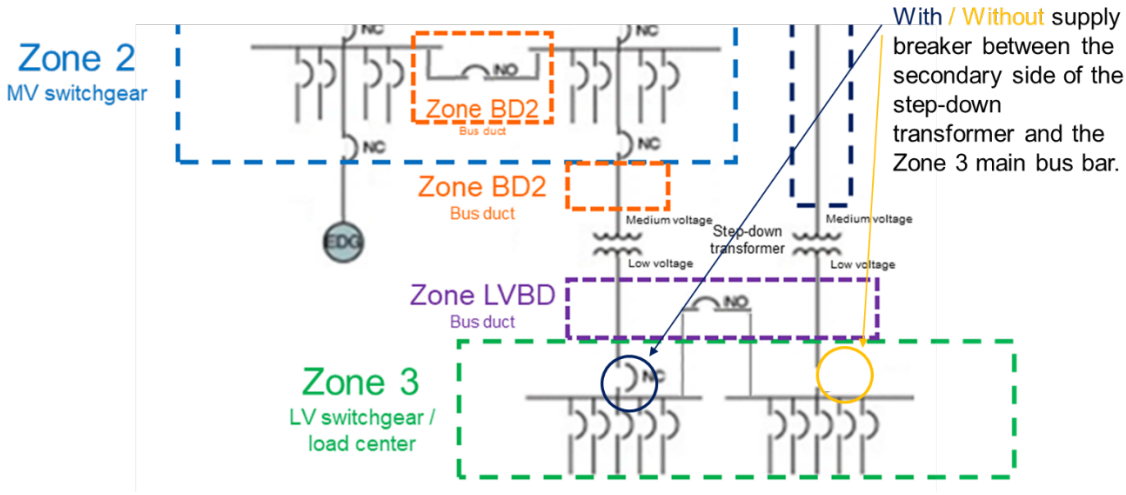

Figure 5-2
Load Center With and Without a Supply Circuit Breaker Between the Zone 2 Main Bus Bar and the Secondary Side of the Step-down Transformer

Motor control centers (MCCs) should not be counted as HEAF ignition sources in bin 16.a. In general, MCCs are not directly connected to a step-down transformer, but through an intermediary load center that provides an extra level of protection and less available fault current. This is further discussed in Appendix B. NUREG/CR-6850 Supplement 1 [2] (FAQ 06-0017) identified that only MCCs with switchgear that is used to directly operate equipment such as a load center should be counted as a HEAF source. The general intent of this statement was to define that HEAFs should be considered in low voltage switchgear or in other words that MCCs with equipment (loads) operated by low voltage powered circuit breakers (LVPCBs) are load centers. There are some MCCs that utilize LVPCBs for the supply breaker and molded case circuit breakers (MCCBs) for loads. The working group concluded that these should be considered a MCC (and not a load center) since no equipment is directly operated by the switchgear. MCC arc flashes are treated in FAQ 14-009 [37].

5.2.2 Bin 16.b: HEAFs for Medium-Voltage Panels (>1000 VAC)

5.2.2.1 Insights from Operating Experience

In NUREG/CR-6850 [1], the counting guidance for HEAFs directed the analyst to count by vertical section. Under NUREG/CR-6850, each vertical section has an equal likelihood of ignition. The seven switchgear HEAF events were reviewed to determine the location of the fault within the switchgear and the subcomponent. Medium voltage switchgear typically has a primary supply and a backup supply circuit breaker (although other arrangements may exist). Revised counting guidance is recommended in Section 5.2.2.2 to more accurately apportion the switchgear frequency as the operating experience does not support equal weight to vertical sections.

Table 5-2
Location of MV Switchgear HEAFs

FEDB ID	Date	Bin	Switchgear location	Subcomponent
732	07/06/1988	16.b	Load	Main bus bar
947	01/03/1989	16.b	Supply	Breaker
74	06/10/1995	16.b	Supply	Breaker
106	02/03/2001	16.b	Supply	Breaker
112	08/03/2001	16.b	Supply	Breaker
50910 – Event 1	03/28/2010	16.b	Supply	Primary cable connection
50910 – Event 2	03/28/2010	16.b	Load*	Breaker

*The breaker where the fault occurred was supplying power to a stub-bus (location of initial HEAF event)

As shown in Table 5-2, the supply circuit breaker cubicle is a likely fault location since:

- Supply circuit breaker protective settings must be selectively coordinated with all load circuit breakers within the switchgear assembly. Since load circuit breakers are set to instantaneously trip for load short circuit faults (typically 0.05s (50ms)); supply circuit breakers do not generally have this instantaneous protection setting in order to maintain coordination. Instead, supply circuit breakers have a region referred to as time overcurrent (51) or breaker short time delay. This delay could be set as high at 4 seconds (240 cycles). This results in a let through energy that can be as high as 80 times for a supply circuit breaker as it is for a load circuit breaker.
- Arc faults have been recorded for load breakers; however, due to the instantaneous trip protection (50), these faults are cleared rapidly such that the energy does not exceed that typical for an arc flash and does not raise to the energy level of a HEAF.

5.2.2.2 Fire PRA Counting Guidance for Medium Voltage Switchgear

As shown in Table 5-2, the MV switchgear events mostly occur in the supply section of the switchgear. Since the operating experience (biased to supply sections) does not accurately reflect the counting (by individual vertical section), this methodology recommends that MV switchgear should be counted by entire switchgear bank (not by individual vertical section).

To summarize, for ignition frequency apportioning, the counting of medium voltage switchgear is based on the count of the number of switchgear (the entire bank is counted as one). An example is provided in Figure 5-3. The plant one line diagram should be reviewed to assist in defining switchgear banks, as the switchgear's physical and electrical function may differ. In some cases, the switchgear physically appears as a single bank, but electrically functions as two banks adjacent to each other (e.g., main bus bars of each bank are separated). If the banks are electrically separated (but appear as one), they should be counted individually.

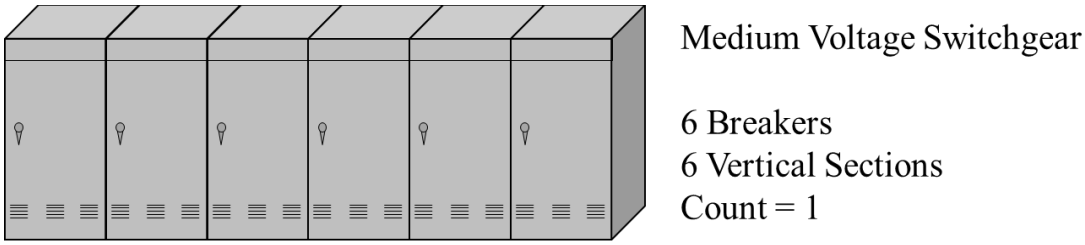

Figure 5-3
Counting of Bin 16.b Medium Voltage Switchgear (Modified from Figure 3-1 in Supplement 1 to NUREG/CR-6850)

The change from counting by vertical section to an entire bank of switchgear is necessary to properly apportion the ignition frequency when detailed modeling is required. NUREG/CR-6850 [1] evenly apportioned the ignition frequency per vertical section. However, as a result of reviewing the operating experience, HEAFs in MV switchgear are most likely to occur in the supply section(s). While not necessary during the counting stage, identifying the supply section(s) may be beneficial for detailed analysis.

5.2.2.3 MV Switchgear Weighting Factor

In addition to the observations of HEAFs within switchgear, similar observations are made based on where the switchgear is located within the EDS. In Section 3, different fault zone progressions exist for Zone 1 switchgear (fed directly from the auxiliary power transformers) and Zone 2 (fed through an intermediate Zone 1 bus). For lineups fed from the UAT, Zone 1 is more likely to experience a generator fed fault as compared to Zone 2. A generator fed fault in Zone 1 occurs when the switchgear bus supply circuit breaker fails to open. To experience a generator fed fault in Zone 2 both the Zone 2 supply circuit breaker and the Zone 1 supply circuit breaker would have to fail to open. After working group discussions, this physical arrangement supported the conclusion that HEAFs are more likely to occur in Zone 1 versus Zone 2. To account for this a Zone Weighting Factor is applied to shift the frequency of switchgear banks to bias Zone 1, with less frequency apportioned to Zone 2.

To determine the factor, the MV switchgear HEAF OPEX was reviewed and is shown in Table 5-3. For each event the normal power alignment in the EDS was categorized in addition to the power flow during the event. For example, the location where FEDB 732 occurred is normally in a Zone 1 alignment. However, when attempting to re-energize the switchgear an alternate power source was aligned that more closely resembled a Zone 2 alignment (fed through an intermediate bus). The working group considered these alternate lineups during the expert panel discussions and concluded that the switchgear zones should not change based on off-normal plant alignments (e.g., the analyst should not have to model Zone 1 and Zone 2 configurations for a single switchgear). Since the fire PRA models events as starting from standard operating conditions (the fire event disrupts the normal operation of the plant), the normal plant configuration should be expected during the initiating event. Therefore, the fault zone associated with a normal alignment is used for the factor. Subsequently, the guidance for the analyst is to use the normal alignment when assigning switchgear into either Zone 1 or Zone 2.

Table 5-3
MV Switchgear Fault Zone Alignment and Alignment During HEAF

FEDB	Date	Bin	Supply or Load Section	Fault zone with a normal alignment	Fault zone during HEAF event
732	07/06/1988	16.b	Load	Zone 1*	Zone 2*
947	01/03/1989	16.b	Supply	Zone 1	Zone 1
74	06/10/1995	16.b	Supply	Zone 1	Zone 1
106	02/03/2001	16.b	Supply	Zone 1	Zone 1
112	08/03/2001	16.b	Supply	Zone 1	Zone 1
50910 – Event 1	03/28/2010	16.b	Supply	Zone 2	Zone 2
50910 – Event 2	03/28/2010	16.b	Load	Zone 1^	Zone 2^

*Assignment based on EDS alignment of the original failure, which was Zone 1 (UAT fed). The fault location did not move, and the fault was still located in Zone 1. However, as part of the post-trip recovery procedural actions, operations attempted to re-energize the bus from an alternate power source which was a switchgear in Zone 2 fed from the SAT.

^50910 Event 2 physically occurred in Zone 1 with respect to normal plant alignment from the UAT but was operating in a Zone 2 alignment (from the SUT at the time).

From this review, 86% (6 out of 7) of the events occurred in Zone 1 and 14% events occurred in Zone 2. The potential for a Zone 1 MV switchgear arcing fault to escalate to a HEAF over that of a Zone 2 arcing fault is due to:

- Zone 1 MV switchgear is typically where the automatic / manual fast bus transfer schemes reside. Fast bus transfers are an electrical transient that require precise timing coordination of multiple circuit breakers/buses. Faults are more likely to occur as a direct result of this type of switching as was the case in four out of the seven MV switchgear HEAF events. Zone 2 MV switchgear EDS alignment normally follows the upstream Zone 1 MV switchgear and does not require circuit breaker operation during Zone 1 MV switchgear bus transfer operations. Even when Zone 2 MV switchgear manual bus transfers are performed, less energy is being switched.
- There is no back up protection for Zone 1 MV switchgear fed from the UAT. Failure of the Zone 1 MV switchgear supply circuit breaker exposes the bus to a generator fed fault due to the decaying residual energy from the generator that cannot be isolated.
    - This is not the case for the same Zone 1 MV switchgear fed from the SAT as there remains backup protection from the switchgear, including defense-in-depth, high-speed switchyard “breaker failure” protection.
- An extra breaker is available from Zone 1 MV switchgear that may be relied upon to clear a downstream Zone 2 MV switchgear fault before it develops into HEAF fed by the auxiliary power transformers.

To implement this shifting of frequency, the steps to identify switchgear and apportion (and conserve) the frequency is documented:

1. Use the station one-line electrical diagram to identify MV switchgear (greater than 1000 V) within the fire PRA global analysis boundary.
2. Identify if the MV switchgear is directly fed from the auxiliary power transformers (primary side of the transformer is connected to the main generator or to the switchyard) or fed

through an intermediate bus. Classify switchgear as either Zone 1 or Zone 2 based on the definitions below.

   a. Zone 1: MV switchgear fed directly from the auxiliary power transformers (either the SAT, UAT, or equivalent)
   b. Zone 2: MV switchgear fed from an intermediate bus (via Zone 1)

3. Start with the apportioned plant-wide frequency for Bin 16.b of 1.98E-03 from Table 5-8. Based on the previous calculation, 86% of the frequency is apportioned to Zone 1 and the remaining 14% to Zone 2. If there are no Zone 2 MV switchgear, then use the entire frequency for Zone 1. The sub frequencies are:
   a. Zone 1: 1.98E-03(.86) = 1.70E-03
   b. Zone 2: 1.98E-03(.14) = 2.77E-04
4. Using the sub frequency value and the counts for Zone 1 and Zone 2 switchgear apportion the sub frequencies amongst the plant specific Zone 1 and Zone 2 counts. This is shown below:
   a. $\lambda_{\text{Zone 1 switchgear bank}}$: 1.70E-03/count of Zone 1 switchgear banks
   b. $\lambda_{\text{Zone 2 switchgear bank}}$: 2.77E-04/count of Zone 2 switchgear banks
5. Use the apportioned frequencies as the scenario frequencies for scenario definition (either screening or configuration specific) in Section 8.

5.2.3 Bin 16.1-1 and 16.1-2: HEAFs for Non-segregated Bus Ducts

Counting of bins 16.1-1 and 16.1-2, non-segregated bus ducts, generally follows the counting guidance in FAQ 07-0035 (Section 7 of Supplement 1 to NUREG/CR-6850 [2]). Consistent with NUREG/CR-6850 Supplement 1 [2], because non-segmented bus ducts (category 1) and cable ducts (category 3) have no transition points other than the termination at the end device, no treatment of bus duct faults independent from the treatment of fires for the end device is required. That is, arc faults for these two categories of bus ducts (category 1 and 3), are inherently included in the treatment of the end device (no further treatment is needed).

The two counting practices are summarized in Section 5.2.3.1 (for known transition points) and Section 5.2.3.2 (for unknown transition points).

5.2.3.1 For Known Transition Points

The counting of segmented bus ducts is based off the total number of transition points. Transition points may be identified by external visual inspection or based on plant electrical construction drawings. While transition points may not be generally known, certain locations may point to the presence of a transition point. For example, geometric factors such as a horizontal direction change (makes a flat or vertical turn) or changes in elevation (a step) suggest the presence of a transition point.

Review of operational experience has also highlighted the potential for a HEAF to occur in locations where environmental access to the bus bar insulation – such as a ventilation openings, mechanical hatches, or external wall penetrations (e.g., yard to turbine building penetration) occur and could allow for an accelerated degradation of the bus bar insulation. Operating experience of NSBD faults inside buildings (protected from weather elements) have also experienced insulated bus bar failure due to long term exposure from either contamination buildup or water that entered through NSBD ventilation openings.

Therefore, for known transition points the analysis should look for fire PRA targets (i.e., fire PRA equipment and cables) within the ZOI at the transition points and postulate scenarios, consistent with Supplement 1 to NUREG/CR-6850 [2]. In addition to the transition points, fire PRA targets in locations with a propensity to allow for degradation of the bus bar insulation – vents, hatches, or wall penetrations – should be captured and included with scenarios structured around the nearest transition points. Openings, such as vents, drains, or hatches located on the underside of ducts are not expected to increase the likelihood of degradation of the bus bar and do not need to be included in a scenario. Locations with a propensity to allow for degradation of the bus bar insulation are not counted as transition points for the purposes of counting segmented bus ducts, but the PRA targets located in the ZOI of one of these locations should be included in a scenario involving the closest transition point.

5.2.3.2 For Unknown Transition Points

The counting of segmented bus ducts is based off the total length of the segmented bus duct installed in the plant. A “per linear foot” frequency can then be estimated by dividing the plant-wide fire frequency by the total length of segmented bus duct in the plant.

Scenarios should be postulated at any point along the duct length where potential fire PRA targets fall within the ZOI. The development of fire scenarios would then depend on the relative length of bus duct for which an identified target set lies within the bus duct ZOI.

Supplement 1 to NUREG/CR-6850 [2] states that when determining the frequency associated with a specific scenario and the transition points cannot be located, the following may be used:

> *A lower limit to the assumed fire frequency for any given fire scenario is also applied. That is, if the length of bus duct for which the identified target(s) fall within the zone of influence is less than 12 linear feet, then a minimum length of 12 feet should be assumed. This lower bound is based on the assumption that, lacking specific information on segment lengths, a nominal segment length of 12 feet should be assumed. Any single scenario is then assigned a fire frequency equivalent to that associated with one bus bar segment 12 feet in length (i.e., equivalent to one nominal transition point).*

5.2.3.3 Using Both Apportionment Methodologies

It is possible to use both the known transition point and the unknown transition point method in the same analysis if the frequency is conserved within the respective NSBD bin. For example, assume transition points are not known for the bus ducts in Bin 16.1-1 (Zone BDUAT and Zone BDSAT). For Bin 16.1.-1, the scenario frequency is apportioned based on linear foot. For Bin 16.1-1, the total linear foot calculation should only include the length of bus duct associated with BDUAT and BDSAT. At the same plant, the transition points for Bin 16.1-2 (Zones BD1, BD2, and LVBD) are known. Within Bin 16.1-2, the frequency can be apportioned using the known transition points. In summary, the analyst may choose different apportioning strategies for Bin 16.1-1 and 16.1-2. However, the analyst cannot selectively apply the NSBD frequency within an ignition source bin (do not apportion the frequency with a mix of linear foot and transition points).

5.2.3.4 Continuous (non-segmented) Bus Ducts and Cable Ducts

As noted in FAQ 07-0035 [2], HEAFs are not postulated along the length of continuous bus duct and cable ducts as they lack transition points and HEAF events are inherently included in the treatment of the end device. Typically, continuous bus ducts are limited in length and the intent of separating segmented bus ducts from non-segmented bus ducts was to eliminate the need

for HEAFs to be postulated on short sections of bus duct (e.g., connecting two nearby load centers) where targets would already be captured within the ZOI of the end device.

5.2.3.5 DC Bus Ducts

Low voltage bus duct may also be present in main generator static excitation systems for distributing dc field excitation current to the generator rotor (field). The bus duct may either be segregated or non-segregated. Unlike ac systems where the impedance dictates the fault level, excitation system current is limited by the firing capability of the excitation system silicon controlled rectifiers (SCR) to about 150% of rated, full load current. The DC excitation system is also ungrounded and continuously monitored by a field ground detector. Credible arcing faults are limited to conductor to conductor. Voltage regulator/excitation systems have multiple levels of limiters and fast acting protection to prevent catastrophic failures (i.e., current limiters act before protection (trip)) and likely supports the reason there have been no reported voltage regulator/excitation failures escalating to the level of a HEAF (including DC bus ducts).

From an energy perspective, rated excitation system conditions for a large nuclear plant are approximately 600Vdc at 5,200Adc. Even if an arcing event were to occur in a large excitation system, the result energy would be limited to approximately 3 MJ/m^2 (or less) per second, as follows:

375V * (5,200*1.5) = 2.9 MJ/m^2, where:

- 375 = arc voltage (conductor to conductor)
- 5,200A = rated current at full load
- 1.5 = 150% current limit from SCRs (full firing)

Due to the low arc energy, low voltage DC bus duct should not be counted as HEAF ignition sources.

5.2.4 Bin 16.2: HEAFs for Iso-phase Bus Ducts

Counting of bin 16.2, iso-phase bus ducts, continues to follow the counting guidance in FAQ 07-0035 [2]:

> *For iso-phase bus ducts, there should generally be one iso-phase bus per unit (an iso-phase bus includes all three phases). If there is more than one iso-phase bus, simply count the total number of iso-phase buses per unit.*

5.2.5 Generic Frequency Apportioning – Ignition Source Weighting Factor

NUREG/CR-6850 [1] identifies the ignition source weighting factor, W_{IS}, as the fraction of the ignition source type in a specific compartment or scenario relative to the total population.

5.2.5.1 Load Centers

As noted in Section 5.2.1.2, only load center supply breakers are counted for bin 16.a.

As an example, consider a NPP with 16 load center supply breakers. To determine the ignition source weighting factor, consider the configuration of three load centers in a single fire compartment:

- Load center with 10 vertical sections (2 supply breakers),
- Load center with 6 vertical sections (2 supply breakers), and
- Load center with 4 vertical sections (1 supply breaker)

The ignition source weighting factor for the load centers are calculated in Table 5-4. Based on the location in the plant EDS, the supply breaker is the only potential location for a HEAF. Load center cubicles or other metering equipment are not counted.

Table 5-4
Load Center Ignition Source Weighting Factor Example

Load center configuration	Ignition source weighting factor, W_{IS}	Discussion
10 vertical sections, 2 supply breakers	0.125	2 supply breakers over a total plant population of 16 load center supply breakers.
6 vertical sections, 2 supply breakers	0.125	2 supply breakers over a total plant population of 16 load center supply breakers.
4 vertical sections, 1 supply breaker	0.0625	1 supply breaker over a total plant population of 16 load center supply breakers.

5.2.5.2 Medium Voltage Switchgear

To apportion the MV switchgear, the methodology in Section 5.2.2.2 is followed and apportioned by counting each MV switchgear bank in Zone 1 and Zone 2, respectively. Once the count in each zone is known, use the MV switchgear weighting factor to determine the switchgear bank frequencies. As a reminder, MV switchgear HEAFs are no longer counted by vertical section.

For example, consider a NPP with 12 MV switchgear. From a review of the plant one-line diagram the count of switchgear in Zone 1 is 5, and Zone 2 is 7.

The ignition source weighting factor for the MV switchgear are calculated in Table 5-5.

Table 5-5
MV Switchgear Bank Frequency Calculation

Location of switchgear	Bin 16.b generic frequency with Zone Weighting Factor	Total count of switchgear within Zone	Switchgear bank frequency (/year)
Zone 1	1.98E-03(.86) = 1.7E-03	5	3.40E-04
Zone 2	1.98E-03(.14) = 2.77E-04	7	3.95E-05

5.2.5.3 Non-Segregated Bus Ducts

Segmented Bus Duct with Known Transition Points

When the transition points are known, the NSBD frequencies (bins 16.1-1 and 16.1-2) are apportioned by transition points. Fire PRA targets in locations with a propensity to allow for degradation of the bus bar insulation should be captured and included with the scenarios structured around the nearest transition points. Example 1 and Figure 5-4 describe scenario selection for the known transition point method.

Segmented Bus Ducts with Unknown Transition Points

When the transition points are not known, the NSBD frequencies (16.1-1 and 16.1-2) are apportioned by 'linear foot' and the location of the fault is not limited to a transition point or locations with a propensity to allow for degradation of the bus bar insulation but may occur at any point along the length of the bus. Ultimately, the development of scenarios depends on the relative length of bus duct a target may be impacted by the HEAF ZOI. Per Supplement 1 to NUREG/CR-6850, there are two approaches:

- Analysis approach 1: Potential fire PRA targets are located within the ZOI for a significant length of duct (greater than the nominal assumed segment length of 12 feet). An estimate of the scenario fire frequency can be based on the plant-wide fire frequency times the ratio of the length of duct (e.g., linear feet) where scenario targets lie within the ZOI to the total length of segmented bus duct in the plant.
- Analysis approach 2: A target set is identified but lies within the ZOI for a limited portion of bus duct (i.e., less than the nominal assumed segment length of 12 feet). An initial analysis should assume that a fault occurs within that segment of the bus duct for where fire PRA targets might be impacted, however long it might be. The fire frequency assigned to the scenario is the minimum fire frequency value calculated based on a minimum 12 foot length of duct.

Example 2 and Figure 5-6 describe scenario selection for the unknown transition point method. In this example, the transition points are not obvious, and the counting and scenario development is based on the total linear foot of NSBD length.

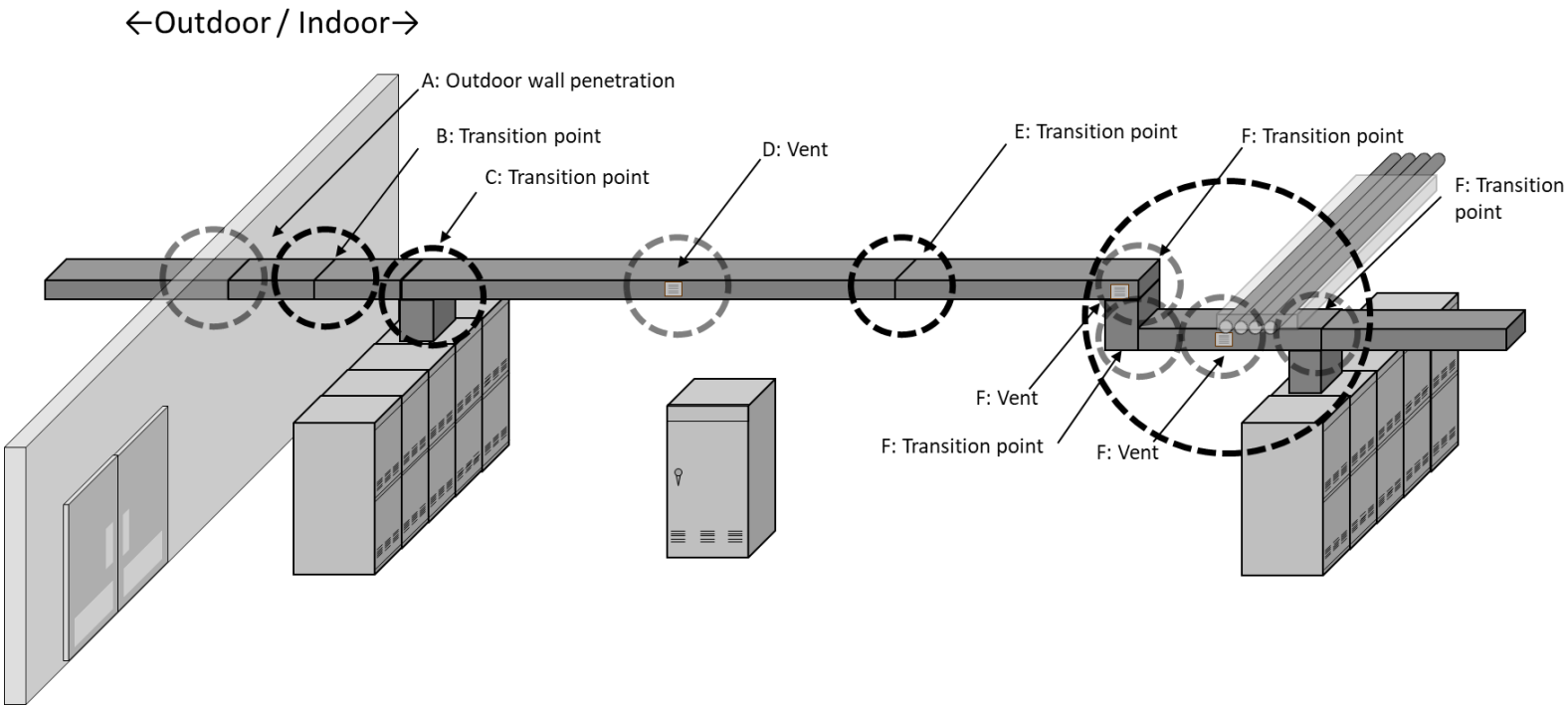

Figure 5-4
Counting of NSBDs (not to scale)

Example 1- Segmented Bus Duct with Known Transition Points

The counting and scenario development for the NSBD in Figure 5-4 are reviewed below:

A. Operational experience highlights the potential for a HEAF to occur where a NSBD penetrates a wall to the outdoors (point A). If fire PRA targets are located within the ZOI for a NSBD near this location (targets either inside or outdoors), the targets should be included within the scenario associated with transition point B.

B. A transition point between the wall and the left most switchgear. A count of one (1) should be attributed to this transition point and a scenario that damages the left most switchgear should be considered.

C. As shown in Figure 5-5 per FAQ 07-0035 [2], end termination points are counted with the end device (in this instance a switchgear,) and not with the NSBD. However, there may be a transition point in the duct above the switchgear that should be considered with the switchgear as a target.

D. There is a vent located on the NSBD between transition points C and E. Scenarios should be developed for NSBDs with fire PRA targets located within the ZOIs of the vent location. The OPEX recorded the potential for a HEAF to occur at similar locations, as such, the fire PRA targets within the ZOI should be considered in the scenario development. The vent is located closer to transition point E and should be considered with the scenario development around this transition point.

E. There are no fire PRA targets located within the ZOI of transition point E. However, the targets located within the ZOI of vent D should be included in scenario E. The count remains at one (1) for the transition point only.

F. Multiple transition points and vents are located within close proximity above the right most switchgear. The cable tray located above the switchgear is within the ZOI of all the nearby transition points and vents. Therefore, consistent with the guidance, the close transition points are counted and grouped as a count of 3.

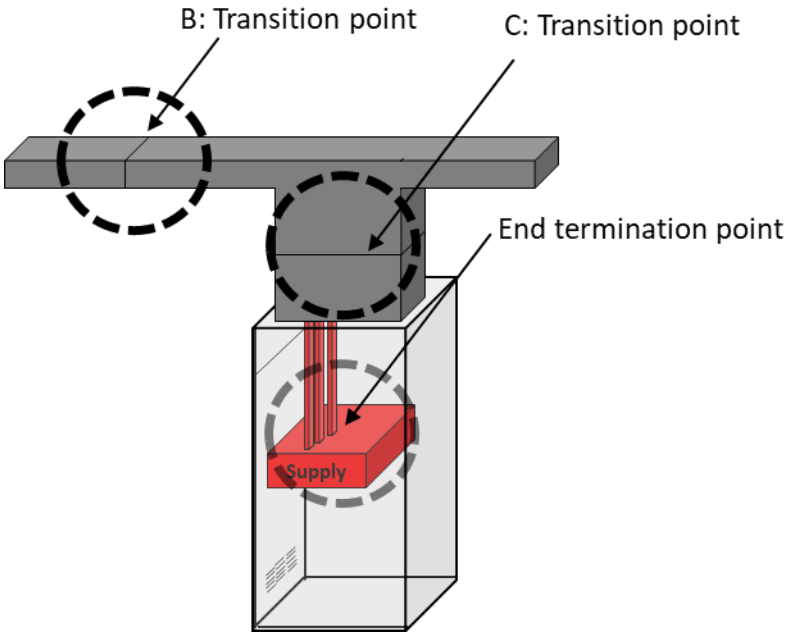

Figure 5-5
"C" Transition Point from Segmented Bus Duct with Unknown Transition Points

Example 2- Segmented Bus Duct with unknown transition points

Consider a length of NSBD in Figure 5-6. In this example, the transition points are not obvious, and the counting and scenario development is based on the total linear foot of NSBD.

The counting and scenario development of the NSBD sections in Figure 5-6 are reviewed below:

A. A section of NSBD runs above a fire PRA target cable tray for a length of approximately 50 feet. Following approach 1, the scenario should use the ratio of length of duct that could impact the fire PRA target. Therefore, a scenario should be developed using the ratio of 50 feet to the total linear foot length of bus duct within the bin.

B. This section of the NSBD runs over a fire PRA target (switchgear). This switchgear is the only fire PRA target or secondary combustible within the NSBD ZOI. Following approach 2, this scenario should use a minimum 12 foot length of bus duct ratioed to the total linear foot length of bus duct within the bin.

C. This section of the NSBD runs over a fire PRA target (electrical cabinet). This cabinet is the only fire PRA target or secondary combustible within the NSBD ZOI. Following approach 2, this scenario should use a minimum 12 foot length of bus duct ratioed to the total linear foot length of bus duct within the bin.

D. Similar to B, this section of the NSBD runs over a fire PRA target (switchgear). This switchgear is the only fire PRA target or secondary combustible within the NSBD ZOI. Following approach 2, this scenario should use a minimum 12 foot length of bus duct ratioed to the total linear foot length of bus duct within the bin.

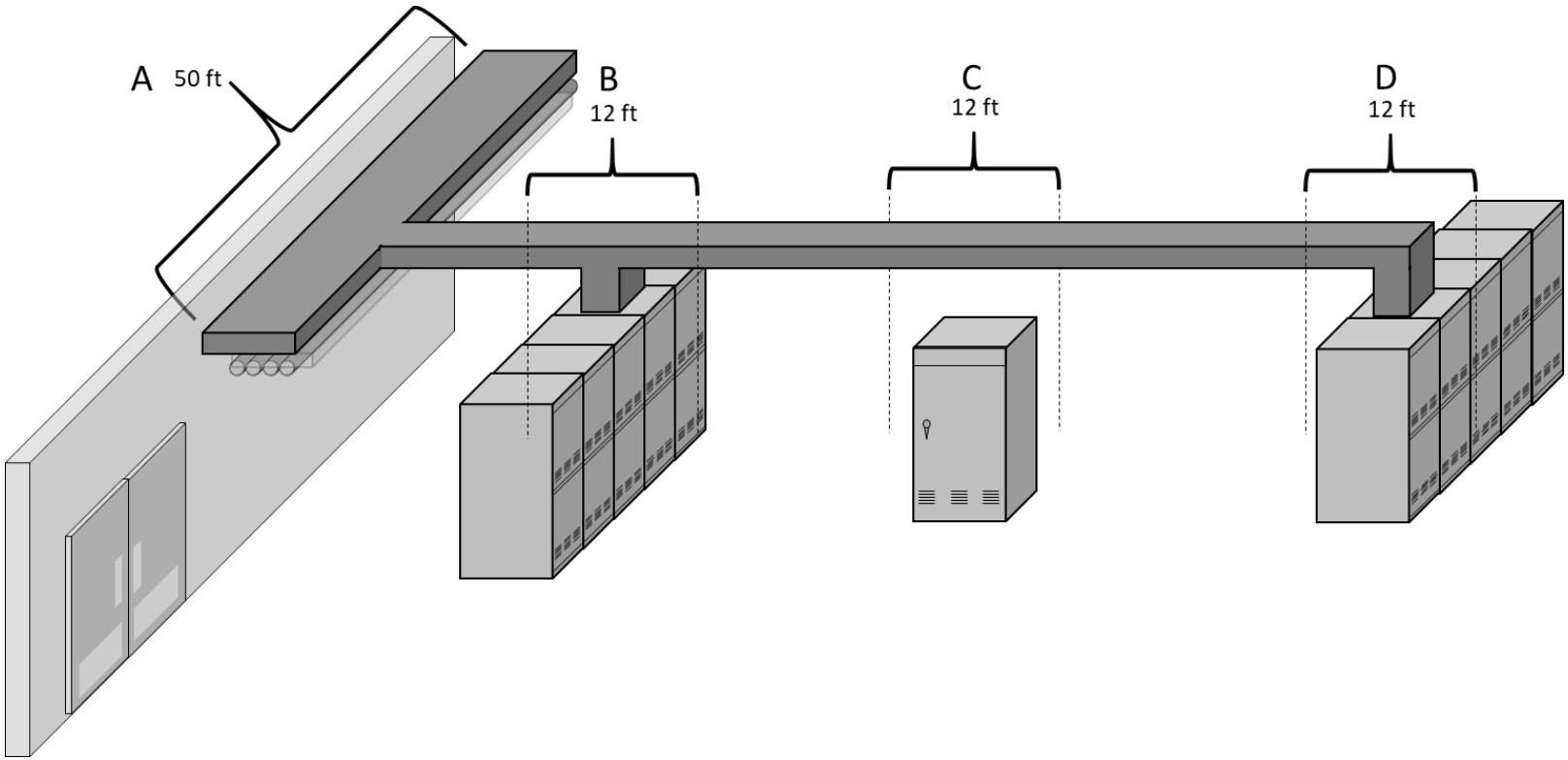

Figure 5-6
Counting of NSBDs with Unknown Transition Points (not to scale)

5.3 HEAF Ignition Frequencies

This report updates the ignition frequencies from NUREG-2169 [38] for the HEAF-related bins. After the publication of NUREG-2169, EPRI collected and classified the fire event data available in the INPO Industry Reporting and Information System (IRIS) database through 2014. This is documented in EPRI 3002005302 [36]. Additional operating experience through 2021 is included. Similar to the assumption made in NUREG-2169 [38], the HEAF events are likely to be reported to the NRC, and this minimizes the chances for missed events in the frequency analysis.

Fire events assigned to the HEAF ignition source bins are reviewed against the arc flash, arc blast and HEAF definitions. These definitions for the purpose classifying events are:

- Arc flash: An event where damage is contained within the general confines of the component of origin, there is minor damage and minimal bus bar degradation, and it does not result in an ensuing fire.
- Arc blast: An event where damage is contained within the general confines of the component of origin, the initiating equipment may be damaged through pressure rise effects, and it does not result in an ensuing fire.
- HEAF: An event where component of origin is damaged and breached with the potential to spread to the surrounding equipment. Pressure rise effects may damage the initiating equipment. HEAFs in switchgear and load centers are accompanied by an ensuing fire. No ensuing fire is necessary for a bus duct event to be considered a HEAF.

Appendix E of RIL 2022-09 / EPRI 3002025123 [16] provides a detailed review of test data and operating experience regarding the pressure rise effects associated with arc blasts and HEAFs. Events classified as arc flashes and arc blasts are not counted in the HEAF ignition frequency or non-suppression rates for switchgear and load centers because they do not result in an ensuing fire. Arc blasts are counted for the bus duct frequency and non-suppression rates with an understanding that bus ducts do not commonly contain combustible material like insulation or wiring material similar to cabinets. Counts are tallied for each HEAF-related ignition source bin. This review also resulted in a number of events previously classified as HEAFs in NUREG-2169 [38] and FAQ 17-0013 [39], which were reclassified into other bins. The counts for each time period are shown in Table 5-6. A more detailed summary of each HEAF event is outlined in Table A-1 with the PRA classification summary in Table A-2.

Table 5-6
HEAF PRA Counts per Time Period

Bin	Location	Ignition Source	Power Modes	FPRA counts		
				1981–1999	2000–2009	2010-2021
16.a	Plant-Wide Components	HEAF for low-voltage electrical cabinets (480-1000V)	AA	1	0	1
16.b	Plant-Wide Components	HEAF for medium-voltage cabinets (>1000V)	AA	3	2	2
16.1-1	Plant-Wide Components	HEAF for segmented bus ducts (Zone BDUAT and Zone BDSAT)	AA	3	3	3
16.1-2	Plant-Wide Components	HEAF for segmented bus ducts (Zones BD1, BD2, and LVBD)	AA	0	0	2
16.2	Plant-Wide Components	HEAF for iso-phase bus ducts	AA	1	1	1

The periods for event counting in Table 5-6 differ from the periods NUREG-2169 [38]. In NUREG-2169 the time periods used to determine the frequency for each bin was dependent on the number of events that occurred within the 2000-2009 time period. Events with a count of fewer than 2.5 events were considered sparse and considered the 1990-1999 time period in the calculation. Bins with a greater than or equal to 2.5 numbers of fires are considered not sparse and use the latest time period for the calculation. Both sparse and non-sparse use the legacy period in NUREG-2169 (1968-1989) as a diffuse prior informing both frequency calculations. The frequency calculation continues to differentiate between sparse and non-sparse bins. If 2.5 or more events occur within the latest time period (2010-2021), only that period is used as the update period for the Bayesian analysis used to calculate the generic fire ignition frequency. For this analysis that period is 2010-2021. When fewer than 2.5 events occurred between 2010-2021, the update period is expanded an additional 10 years to 2000-2021. The update periods are shifted to capture the latest decade of operating experience and accurately consider industry trends.

Additionally, the prior now considers 1981-1999. The 1968-1980 data is sunset. An element that shaped the decision to shift the starting year of prior period to 1981 was the adoption of Appendix R to 10 CFR 50. This represents a shift in the industry that could have propagated impacts into the frequency of fire events. This, coupled with observations that older data is often less robust and inconsistent in reporting of the elements needed to properly classify fire events, the decision was made the no longer carry the oldest events in the analysis. While the period has shifted, the development of the prior follows the method used in NUREG-2169 [38] and continues to be very diffuse, introducing limited bias into the analysis which continues to be significantly driven by the data in the update periods. The 1990s data is included in the prior as it is no longer within the 20 year update period.

The number of reactor years for each time period is listed in Table 5-7. The updated HEAF frequency distributions for each bin are presented in Table 5-8.

Table 5-7
Reactor years for fire ignition frequency update

	1981–1999	2000–2009	2010-2021
Reactor years (all)	1889	1040	1195

Table 5-8
Fire Ignition Frequency Distribution for HEAF Ignition Sources

Bin	Location	Ignition Source	Power Modes	Period	Mean	Median	5th percent	95th percent
16.a	Plant-Wide Components	HEAF for low-voltage electrical cabinets (480-1000V)	AA	2000-2021	5.32E-04	1.26E-04	4.67E-07	1.69E03
16.b	Plant-Wide Components	HEAF for medium-voltage cabinets (>1000V)	AA	2000-2021	1.98E-03	2.20E-04	3.59E-07	6.90E-03
16.1-1	Plant-Wide Components	HEAF for segmented bus ducts (Zone BDUAT and Zone BDSAT)	AA	2010-2021	2.61E-03	1.06E-03	6.31E-06	8.28E-03
16.1-2	Plant-Wide Components	HEAF for segmented bus ducts (BD1, BD2, and BDLV)	AA	2000-2021	8.98E-04	1.73E-04	2.11E-07	2.95E-03
16.2	Plant-Wide Components	HEAF for iso-phase bus ducts	AA	2000-2021	1.01E-03	2.81E-04	7.59E-07	3.28E-03

5.3.1 Generator Circuit Breaker

A generator circuit breaker (GCB) is a circuit breaker specifically designed and installed between the main generator and interconnected transformers (generator step-up (GSU) and unit auxiliary transformers (UAT)). The GCB is physically integrated within the interconnected iso-phase bus duct system at operating voltages ranging from 17kV to 25kV, and therefore, must be able to interrupt large fault currents reaching 200kA (or more). As a result of their high short-circuit current interrupting rating, they are designed, constructed, and operated differently than medium voltage circuit breakers and high voltage switchyard circuit breakers. The standard that governs the design and testing of GCBs is IEEE Standard C37.013 [23].

The GCB design arose from the increase in size of electric generating stations and facility requirements to prevent interruption of power to station auxiliaries in the event of a station trip or generator fault. That is, power from the switchyard back-feeds the auxiliary power system through the GSU and UAT without the need for bus transfers when the generator trips or is shutdown. In addition to their operational flexibility, GCBs can prevent the coast down energy of the main generator from feeding faults elsewhere on the auxiliary power system if the fault is detected within the GCB zone of protection (e.g., the UAT, Zone 1 switchgear bus supply circuit breakers, and associated non-segregated bus).

Less than 20% of the United States NPPs are equipped with GCBs. The remaining US NPPs are unit-connected designs without the benefit of GCBs. Crediting the GCB in scenarios where

a GCB can reduce the frequency of generator fed faults is covered in Sections 8 and 9 and is summarized below:

- The portion of the iso-phase bus duct (Bin 16.2) downstream of the GCB,
    - The portion of the IPBD upstream of the GCB should not credit the GCB factor since the GCB is physically located downstream of the faulted location and cannot interrupt.
- Zone BDUAT (non-segregated bus ducts), and
- The supply section of a Zone 1 MV switchgear fed from the UAT.

The Conseil International des Grands Réseaux Electriques (CIGRE), [40] performed a comprehensive survey that was used to develop reliability parameters using major failures for air-blast, SF_6 pneumatic, and SF_6 hydromechanical spring operating GCB technologies. A major failure was defined as a failure of a switchgear or control gear which causes the cessation of one or more of its fundamental functions. The results developed in the CIGRE study use major failure data from over 100 countries for a period of approximately 40 years. With respect to the types of power generation, the data was heavily skewed towards pumped storage power generation with only around 1.2% of the operational data coming from nuclear power generation.

Table 5-9 presents the reported major failures “on command,” or as commonly known in PRA, “on demand.”

Table 5-9
Generator Circuit Breaker Major Failures on Command

	Air-blast	SF6 with pneumatic operating system	SF6 with hydromechanical spring operating mechanism
Major failures per 10,000 close commands	**0.344**	**0.032**	**0.020**
Does not close on command	*0.339*	*0.032*	*0.018*
Does not make the current	*0.006*	*0.000*	*0.002*
Major failures per 10,000 open commands	**0.006**	**0.028**	**0.004**
Does not open on command	*0.006*	*0.016*	*0.004*
Does not break the current	*0.000*	*0.012*	*0.000*
Major failure per cycle (Failure per 10,000 cycle)	**3.5E-05**	**6E-06**	**2.4E-06**

The value of 3.5E-05 associated with the air-blast type GCB bounds the failure results for the three different GCB technologies. Credit for the GCB interrupting the faulted conditions can be applied when the fault is within the GCB zone of differential protection. This credit can be applied to the following fault zones:

- Iso-phase bus duct (Section 9.3.1)
    - The portion of the IPBD upstream of the GCB should not credit the GCB factor since the GCB is physically located downstream of the faulted location and cannot interrupt.
- BDUAT (Section 9.3.2)
- Zone 1 supply section of MV switchgear (Section 8.5)

5.4 Updated HEAF Manual Non-Suppression Rate

Consistent with FAQ 17-0013 [39], the non-suppression time is defined as the time the fire was extinguished or the time the fire was reported as under control by responding plant personnel, personnel discovering the fire, or the fire brigade.

For a HEAF event, suppression can only be credited for the ensuing fire following the energetic phase of the HEAF. There is no suppression credit during the energetic arcing fault portion of the event. The events considered in the suppression rate are detailed in Table A-2.

A summary of the number of events, fire durations, and suppression rates are provided in Table 5-10 and shown graphically in Figure 5-8. There are 15 events considered in the determination of the suppression rate, whereas 23 events are considered in the determination of the generic fire ignition frequency. The primary difference is the number events counted for the determination of the suppression rate results from the inability to count events with no suppression time (self-extinguish), automatic suppression, or unknown suppression times.

Table 5-10
HEAF Probability Distribution for Rate of Fires Suppressed per Unit Time

Suppression Curve	Number of Events	Total Duration	Rate of Fire Suppressed (λ)			
			Mean	5th Percent	50th Percent	95th Percent
HEAF	15	576	0.026	0.016	0.025	0.038

Similar to NUREG-2169 [38], the 5th, 50th, and 95th percentiles for the suppression rate, λ, in Table 5-10 are calculated in using the Chi-square distribution as shown in Equation 5-1.

$$P(x,\upsilon)/t_D/2 \qquad \text{Equation 5-1}$$

where $P(x,\upsilon)$ is the lower cumulative distribution function of the Chi-square distribution, x is the desired percentile, υ is the number of degrees of freedom (equal to the number of events used in the suppression curve), and t_D is the total duration suppression time for the suppression curve.

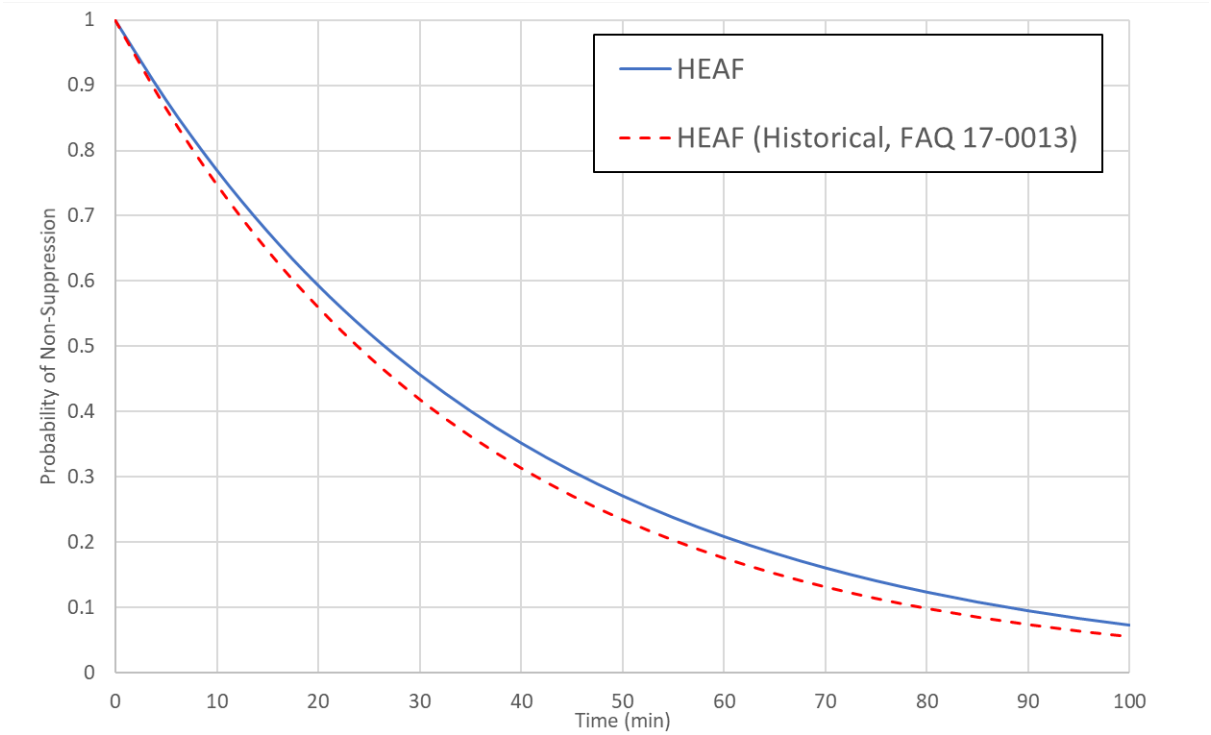

Figure 5-7
HEAF Non-Suppression Curve Plot: Probability Versus Time Available for Suppression

6
HIGH ENERGY ARCING FAULT DAMAGE CRITERIA AND ZONE OF INFLUENCE

Section 6.1 documents potential failures aside from the energetic ZOI (e.g., electrical components that should be failed, survivability of structural elements). Section 6.2 documents quantitative HEAF-related failure thresholds. Section 6.3 provides a summary of the energetic end states postulated. Section 6.4 describes the steps to determine fault clearing times. The energetic portion of the ZOI is characterized in Sections 7, 8, and 9 (combining the thresholds defined in Section 6.3, with the arc energies in Section 6.3, and the plant-specific fault clearing times in Section 6.4). The characterization of determining the damage for the ensuing fire phase is documented in Section 6.5.

6.1 Damage Characterization During the Energetic Phase

A HEAF event is modeled in two phases: 1) the energetic phase and 2) the ensuing fire. Figure 6-1 depicts the energetic phase damage ZOI for short and long fault clearing times. The ensuing fire will have a heat release rate equal to the 98th percentile peak value and will have a ZOI associated with the thermal radiation from the flames and from the fire plume. Figure 6-2 depicts a typical ensuing fire ZOI.

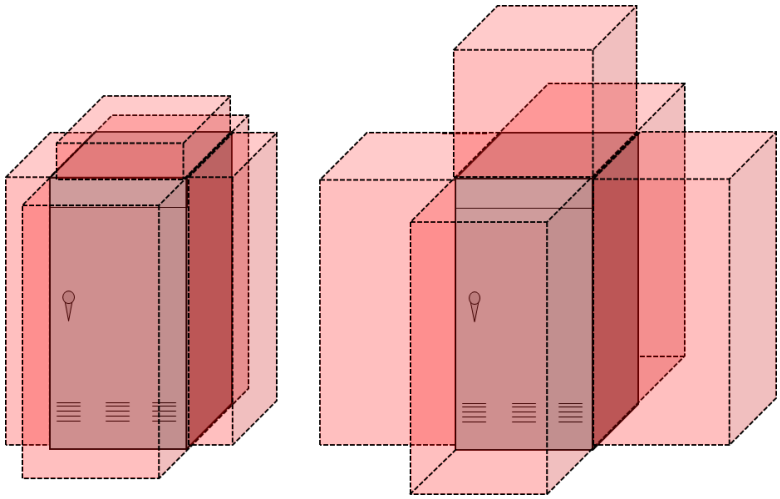

Figure 6-1
Energetic Phase of HEAF ZOI: Left Representative of Shorter Fault Clearing times, Right Representative of Longer Fault Clearing Times (figures not to scale, ZOI subject to the target fragilities and fault characteristics)

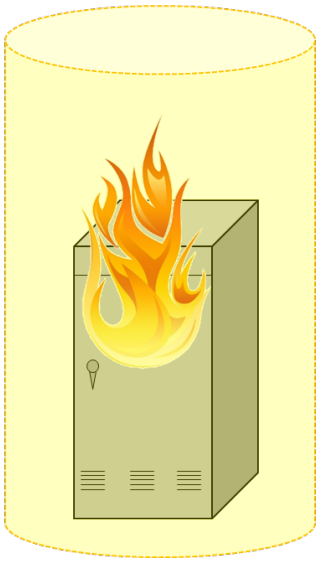

Figure 6-2
Post-HEAF Ensuing Fire ZOI (figure not to scale, ZOI subject to size of fire developed by analyst and considerate of secondary combustibles)

The energetic phase and ensuing fire ZOI are not necessarily equal. For short fault clearing times, the ensuing fire ZOI may be larger than the energetic phase ZOI. For longer fault clearing times, some or all components of the energetic phase ZOI may be larger than the ensuing fire ZOI. An important distinction between the two ZOIs is that the ensuing fire ZOI may allocate frequencies to various target end states and incorporate suppression factors whereas the energetic phase ZOI does not. Figure 6-3 provides a qualitative comparison of the energetic phase and ensuing fire phase ZOIs for short and long fault clearing times. Note that the ensuing fire ZOI may expand beyond the ZOI associated with the HEAF if secondary combustibles are involved, a damaging hot gas layer forms, or adjacent electrical enclosure sections are ignited.

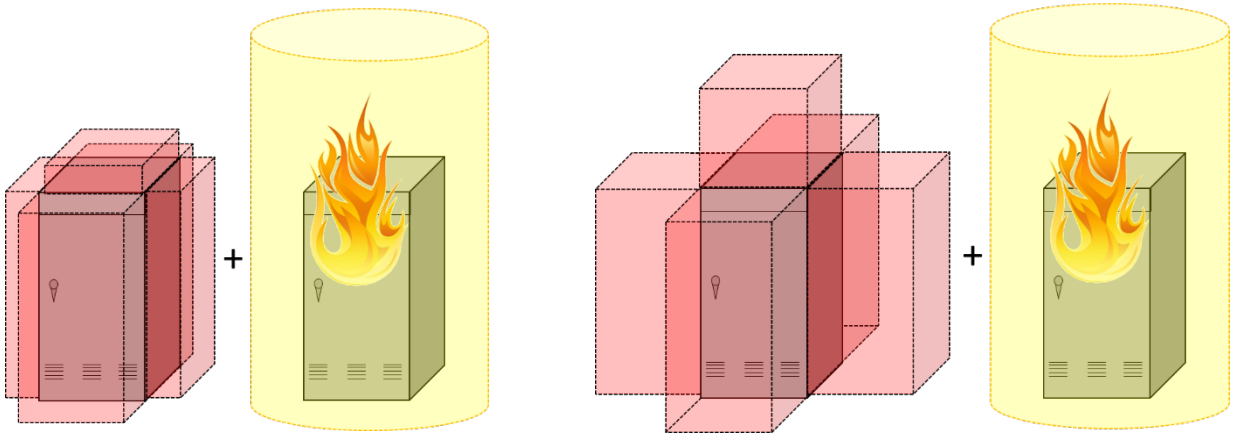

Figure 6-3
Energetic HEAF ZOI at Short and Long Fault Clearing Times with Ensuing Fire (figures not to scale)

6.1.1 Switchgear and Load Centers

NUREG/CR-6850 Appendix M.4.2 and M.5 are updated to categorize the qualitative damage elements of HEAFs. For switchgear and load centers:

- The initial arcing fault will cause destructive and unrecoverable failure of the faulting device, e.g., the feeder breaker cubicle, including the control and bus-bar sections.
- The next upstream overcurrent protection device in the power feed circuit leading to the initially faulting device will trip open, causing the loss of all components fed by that electrical bus. This fault may be recoverable if the initial faulting device can be isolated from the feeder circuit.
- Do not fail fixed structural elements such as walls, floors, ceilings, and intact penetration seals (see Appendix E of RIL 2022-09 / EPRI 3002025123 [16]). Do not fail large components and purely mechanical components such as large pumps, valves, major piping, fire sprinkler piping, non-soldered connected piping, or other large piping (1” diameter or greater).
- The subsequent (ensuing) cabinet fire will continue to burn consistent with a fire intensity and severity described in Section 6.5.
- Unprotected cables (armored cables with exposed plastic covering, TS, TP, etc.) that drop into the top of the panel will be ignited [15].
- The energetic phase occurs so fast that neither automatic nor manual suppression systems can prevent against damage and ignition within the ZOI.
- The amount of smoke is expected to activate any smoke detection system in the area.
- Manual suppression by plant personnel and the fire brigade may be credited to control and prevent damage outside the initial ZOI from ensuing fires. The HEAF suppression curve should be used.

6.1.2 Non-Segregated Bus Ducts

From NUREG/CR-6850 Supplement 1, the ZOI for bus ducts are unique from switchgear and load centers. Bus ducts events generally involve a pool of molten metal and possible burning insulation material that forms within and then burns through the lower surface of the bus duct enclosure. This material spills out of the bus duct, may form a molten pool on the floor or objects below, may splatter onto other nearby surfaces, and may ignite and combustible of flammable materials contacted. The following bullets update the NSBD treatment from NUREG/CR-6850 Supplement 1.

- Assume that the effects of the bus duct fault are manifested at a transition point (the fault point). Recall that failures at the end point terminations are captured under the end point equipment.
- Switchgear, load centers, MCCs, and transformers powered by the bus duct are deenergized. Transfer to alternate power lineups is required for this equipment to be available.
- The following ZOI is assumed to originate from the edge of the bus duct enclosure at the assumed transition point location.

- Assume that the initial arc fault will breach the bus duct enclosure during the energetic phase and will spread out from the edge of the bus duct in a rounded corner square shape. Along the length of the bus duct, assume the bus bar/duct damage extends the length of the fragility threshold in both directions from the initial fault location. Figures 9-1 and 9-2, characterize this “along the bus duct” ZOI.
- Assume that molten metal material will be ejected from the bottom of the bus duct below the fault point, encompassing the shape of a “waterfall” flowing 1.5 feet from the edge faces of the bus duct. Along the length of the bus duct, assume the waterfall extends the length of the fragility threshold in both directions from the initial fault location. Figures 9-1 and 9-2, characterize this ZOI.
- Assume that any exposed combustible or flammable material within the “waterfall” ZOI will be ignited by the molten slag. Combustible/flammable materials should not be considered exposed if protected by a fire-rated raceway wrap, conduit, or solid metal panels (e.g., switchgear enclosure). Specific examples of the recommended treatment of exposed versus non-exposed materials are as follows:
    - The solid metal top panels of an electrical cabinet will prevent ignition of the combustible/flammable materials inside the cabinet.
    - For cabinets with a ventilated top or unsealed cable or conduit penetrations, molten material deposited on top of the panel will penetrate into the panel and ignite the contents if the openings are within the ZOI.
    - For electrical cabinet side panels or doors that include ventilation openings, molten material in the waterfall ZOI is not considered capable of penetrating horizontally into the electrical cabinet.
    - Cables in conduit will not be ignited by molten materials deposited on the outer conduit surface if the open ends of the conduit are located outside the “waterfall” ZOI.
    - Cable in trays that are equipped with unventilated steel covers will not be ignited by molten metals falling from above.
    - Cables in open-top cable trays will be ignited if they are within the “waterfall” ZOI.
    - The first solid surface encountered by the material ejected from the bus duct will truncate the “waterfall” zone of influence along that line of travel. (Examples include: where the ZOI intersects the floor, a sealed cabinet top, or a cable tray with a solid metal cover, it does not extend through that surface to other targets or flammable material beyond). For stacked cable trays in which the first open-top cable tray is sufficiently filled, the first cable tray can be considered to truncate the “waterfall” ZOI.
- Damage within the ZOI occurs at time zero (concurrent with the initial fault), but secondary combustibles within the “waterfall” ZOI should be assumed to develop over time from a point ignition origin (e.g., a cable tray should be assumed to ignite at one point, not over its entire exposed length).
- Subsequent analysis of fire development, fire detection, and fire suppression response follow the same practices as applied to HEAFs for switchgear and load centers. In particular, the manual HEAF fire brigade response curve is also applicable to bus duct faults.

6.2 Summary of HEAF-related failure thresholds

Due to the simplicity of the model in NUREG/CR-6850 and NUREG/CR-6850 Supplement 1, there was no need for specific fragilities for targets exposed to a HEAF. Building off data from fragility testing documented in [14], RIL 2022-01 (EPRI 3002023400) [15] documents the working group conclusions on fragilities for electrical cables. Additional PRA targets are discussed and documented in Appendix F. The following target fragility thresholds are established to define the energetic portion of the HEAF ZOIs:

- 15 MJ/m²
  - Electrical failure/damage of thermoplastic[6] (TP) jacketed cables. This also includes TP jacketed cables in conduit, cable trays (including any top/bottom cover), cable bus ducts, and cable wireways.
    - The cables, regardless of raceway do not see sustained ignition during the energetic phase of the HEAF.
  - Damage to junction boxes with TP jacketed cables (see discussion in Appendix F.4.1 and guidance in F.5.1).
  - Damage to electrical equipment (e.g., PRA target such as battery chargers, dry transformers, inverters, load centers, MCCs, switchgear, etc.). This is a bounding target selection that can be refined; see the step-wise process in Appendix F.5.2 for full details.
    - In the detailed approach (which considers ventilation if more refinement is necessary) at 15 MJ/m^2: Open ventilation (regardless of aluminum or metal enclosure) or for equipment with limited ventilation with an aluminum enclosure is assumed failed.
  - Damage to aluminum enclosed bus ducts.
  - Damage to copper instrument air piping with soldered joints[7].

- 30 MJ/m²
  - Electrical failure/damage of thermoset (TS) jacketed cables. This also includes TS cables in conduit and cable trays (including any top/bottom cover).
    - The cables, regardless of raceway, do not see sustained ignition during the energetic phase of the HEAF.
  - Damage to junction boxes with TS jacketed cables (see discussion in Appendix F.4.1 and guidance in F.5.1).
  - Damage to electrical equipment classified as limited ventilation (e.g., PRA targets that are closed (no vents), have bents with louvers or filters, or not in the line of sight of the HEAF). See Appendix F.4.2 for more details.
  - Damage to steel enclosed bus ducts.
  - Damage to steel instrument air piping[8].

- Cables in raceways located within the scenario ZOI and protected by an electric raceway fire barrier systems (ERFBS) are considered protected. They are not damaged, not ignited, and do not contribute to the fire load.

[6] Consistent with guidance in NFPA 805 FAQ 08-0053 Revision 1 close-out memo, ML121440155 [41], Kerite-FR insulated cable should be assumed damaged at thermoplastic thresholds.

[7] This item is not covered in Reference 15, but was discussed and agreed during the November 2021 working group meeting. The thermoplastic failure criteria was agreed as a suitable damage threshold in lieu of additional testing or operating experience.

[8] This item is not covered in Reference 15, but was discussed and agreed during the November 2021 working group meeting. Steel instrument air piping would require a breach therefore the 30 MJ/m^2 was selected.

6.3 Introduction to HEAF Zone of Influence Evaluation

In Section 3.1, generic fault zones are developed to understand the potential arcing fault durations for HEAF-susceptible equipment. The HEAF progression trees developed in Section 3 outline the various durations associated with a fault in the HEAF susceptible equipment.

Sections 7, 8, and 9 focus only on the end states expected to result in a HEAF (end states not expected to result in a HEAF are not postulated). Since the Bin 16 generic ignition frequencies are developed from HEAF operating experience, end states from branches with successful protection scheme operation that do not lead to fault durations for energy levels capable of resulting in a HEAF are not postulated. This ensures that the methodology postulates only HEAF outcomes (and not a thermal fire event that is captured with Bin 15). Additionally, when multiple end states produce a similar outcome – the branches are combined to simplify the analysis. Finally, for MV switchgear and some NSBD fault zones, split fractions are introduced to apportion the scenario frequency to specific ZOIs, when detailed evaluation is necessary.

6.3.1 Use of Fire Dynamics Simulator for Modeling the Energetic Portion of the HEAF ZOI

Fire Dynamics Simulator (FDS) [42, 43], a computational fluid dynamics (CFD) software tool developed by the National Institute of Standards and Technology (NIST), was used to model HEAF events in MV switchgear, low voltage switchgear, and non-segregated bus ducts.

- Simulations in MV switchgear includes both vertical and horizontal lift circuit breaker configurations.
    - For vertical lift circuit breakers, the FDS model geometry is based on the GE Magne-Blast metal clad switchgear.
    - For horizontal lift circuit breakers, the FDS model geometry is based upon the ABB ITE metal clad switchgear.
- The FDS model geometry for load center HEAFs is based on the GE AKD metal clad switchgear.
- The FDS model geometry for NSBD HEAFs uses common bus duct configurations (straight, tee, elbow) with a single bus-duct metal thickness of 0.125 inches (3.18 mm). This thickness corresponds to commonly used aluminum sheet and 11-gauge steel thicknesses.

Each set of FDS simulations was benchmarked against either full scale testing (MV switchgear and NSBD) or operating experience (NSBD and load centers). The MV switchgear benchmarking is used to establish the bias and uncertainty of FDS model predictions for HEAF. The full details of the simulations and results are documented in Reference [16].

The FDS simulations for medium-voltage switchgear characterized the HEAFs using an arc power profile. A brief overview of how the arc power profile is constructed representing typical plant conditions is discussed below.

During the energetic phase of the HEAF, the power of the arc can be defined in terms of voltage and current. For medium voltage systems, the arc voltage is the voltage drop across the arc which is dictated by the geometry and spacing of the bus bars and enclosure and is significantly less voltage than the system voltage. Through testing, data analysis, and modeling discussed in Appendix A of [16], the arc voltage is sufficiently consistent and representative for all medium voltage levels. This arc voltage value is $650V_{L-L}$ for 4.16kV, 6.9kV, and 13.8kV systems. Similarly, the arc voltage for low voltage systems (480V and 600V) is $375V_{L-L}$.

With respect to arcing fault currents, sufficient data from actual medium voltage HEAF events at NPPs revealed that these arcing fault currents ranged from 28kA to 32kA. The average of 30kA was chosen to be representative of the NPPs for purpose of determining the arc power.

The remaining component to the arc power equation is to include the √3 to represent the three phase system. Therefore, arc power is defined by Equation 6-1:

$$\text{Arc Power (Watts)} = V_{\text{arc(L-L)}} \cdot I_{arc} \cdot \sqrt{3} \qquad \text{Equation 6-1}$$

The arc power profile is a time based profile that results in the integrated energy delivered by the arc and may be expressed as in Equation 6-2:

$$\text{Arc Energy (Joules}/m^2) = W_{arc\ power} \cdot T_{arc} \qquad \text{Equation 6-2}$$

The arc power profile uses Equations 6-1 and 6-2 to calculate the total integrated energy of a HEAF. The profile (time) may either be fixed arcing fault current over time, or an exponentially decaying current profile representative of a generator fed fault. To illustrate, a simple “fixed” arcing fault current of a 2 second duration (i.e., fault clearing time) is used to calculation the total energy of the arc:

$$Arc\ energy\ = 650V_{L-L} \cdot 30{,}000A \cdot \sqrt{3} \cdot 2_{seconds} = 68\frac{MJ}{m^2}$$

6.3.1.1 Medium-Voltage Switchgear and Non-Segregated Bus Ducts

A constant-current arc power profile and a generator-fed arc profile were considered. The constant-current arc duration ranged from 2 – 5 s, consistent with the timing in Section 3. Testing demonstrated that arc faults in medium-voltage switchgear under a 2 s duration do not have sufficient energy to reach HEAF thresholds. A minimum threshold of 2 s is sufficient to bound arc faults at 2 s and under. Several 1 s duration HEAFs were considered for the NSBDs to assess the effect of shorter duration arcs on aluminum enclosures. Generator-fed faults were evaluated using the same arc voltage of 650 V_{L-L} as the constant-current arcs but with a current that decayed with exponentially time. The decay duration of 15 s is based on the timing in Section 3. Generator-fed faults are evaluated with and without an initial constant-current arc fault of variable duration.

The total arc energy is the arc power profile integrated over time. For constant-current arcs, this energy is the power multiplied by the duration. For generator-fed faults, the total arc energy includes any constant-current portion plus the generator-fed power profile integrated over time. The range of arc energies considered was 68 – 300 MJ for medium-voltage switchgear and 34 – 300 MJ for NSBDs. The power profiles and the calculation details for medium voltage switchgear and non-segregated bus duct HEAFs are detailed in Section 5 and Appendix A of the FDS ZOI report [16].

6.3.1.2 Load Centers

The arc power profile for load centers (also known as low-voltage switchgear) is determined using operating experience as described in Section 3. The power profile and total arc energy from FEDB 50935 was determined using the available line-to-line voltage and current data for the event. The profile was simplified by characterizing the data in two constant-current arc stages. The first stage lasted for 20 s and had an approximate average current of 5.85 kA. The second stage lasted 21 s and had an approximate average current of 2.75 kA. The line-to-line voltage for both stages was 375 V_{L-L}. The power profile was then determined using

Equation 6-1. The total arc energy for the low-voltage switchgear HEAFs was 90 MJ in all baseline cases. The power profiles and the calculation details for load centers are presented in Section 5 and Appendix A of the FDS ZOI report [16].

6.3.2 Summary of HEAF End States

ZOIs are developed for load centers, medium voltage switchgear, and bus ducts. At a high level, the end states considered include:

- Generator fed with differential protection (87): This end state is used for fault locations within the transformer zone of differential protection for generator fed faults. This fault energy decays to zero over 15 seconds to simulate the coast down from a turbine-generator trip (modeled based on FDS runs for 0 stiff / 15 s decay). Figure 6-4 shows the classic generator fed fault for Zone 1 MV switchgear (fault in or around the circuit breaker stabs rendering the Zone 1 bus supply breaker ineffective at clearing the fault).
    - The total energy release is 132 MJ.

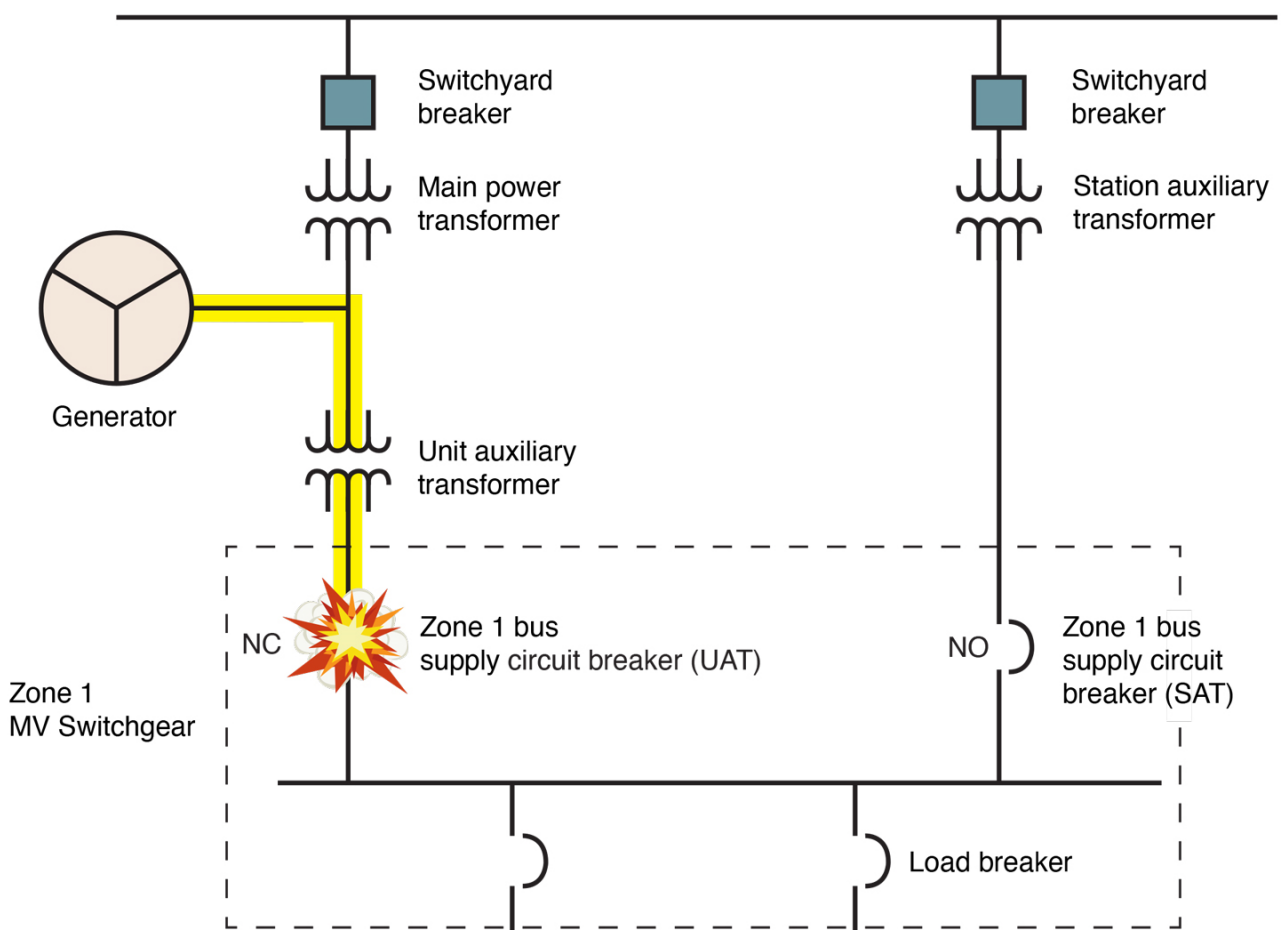

Figure 6-4
Conceptual Drawing of Generator Fed Fault with Stuck Zone 1 Bus Supply Circuit Breaker

- Generator fed outside the zone of differential protection (87): This end state is used for energy feeding the fault from the generator via the UAT outside the transformer zone of differential protection (87). For these scenarios, the UAT backup protection (time overcurrent (51) relay) is credited. This end state is modeled with a stiff or constant energy portion prior to a decay (generator fed fault). Figure 6-5 show an example of a generator fed fault in Zone 2. To reach this end state at least three independent failures in addition to the fault are required. Figure 6-5 shows the lowest point in the EDS that is potentially susceptible to a generator fed fault. As the fault point is moved upward through the EDS there are fewer independent failures necessary to expose the faulted location to a generator fed fault.

  The stiff or constant current time regimes for outside the zone of differential protection include:

  - 0 to 0.5 seconds – modeled based on FDS runs for 0 stiff / 15 s decay.
    - Total energy: 132 MJ
  - 0.51 to 2 seconds – interpolated based on FDS runs 0 stiff / 15 s decay and 3 stiff / 15 s decay
    - Total energy: 199 MJ
  - 2.01 to 3 seconds – modeled based on FDS runs for 3 stiff / 15 s decay
    - Total energy: 233 MJ
  - Greater than 3 seconds – modeled based on FDS runs for 5 stiff / 15 s decay
    - Total energy: 300 MJ

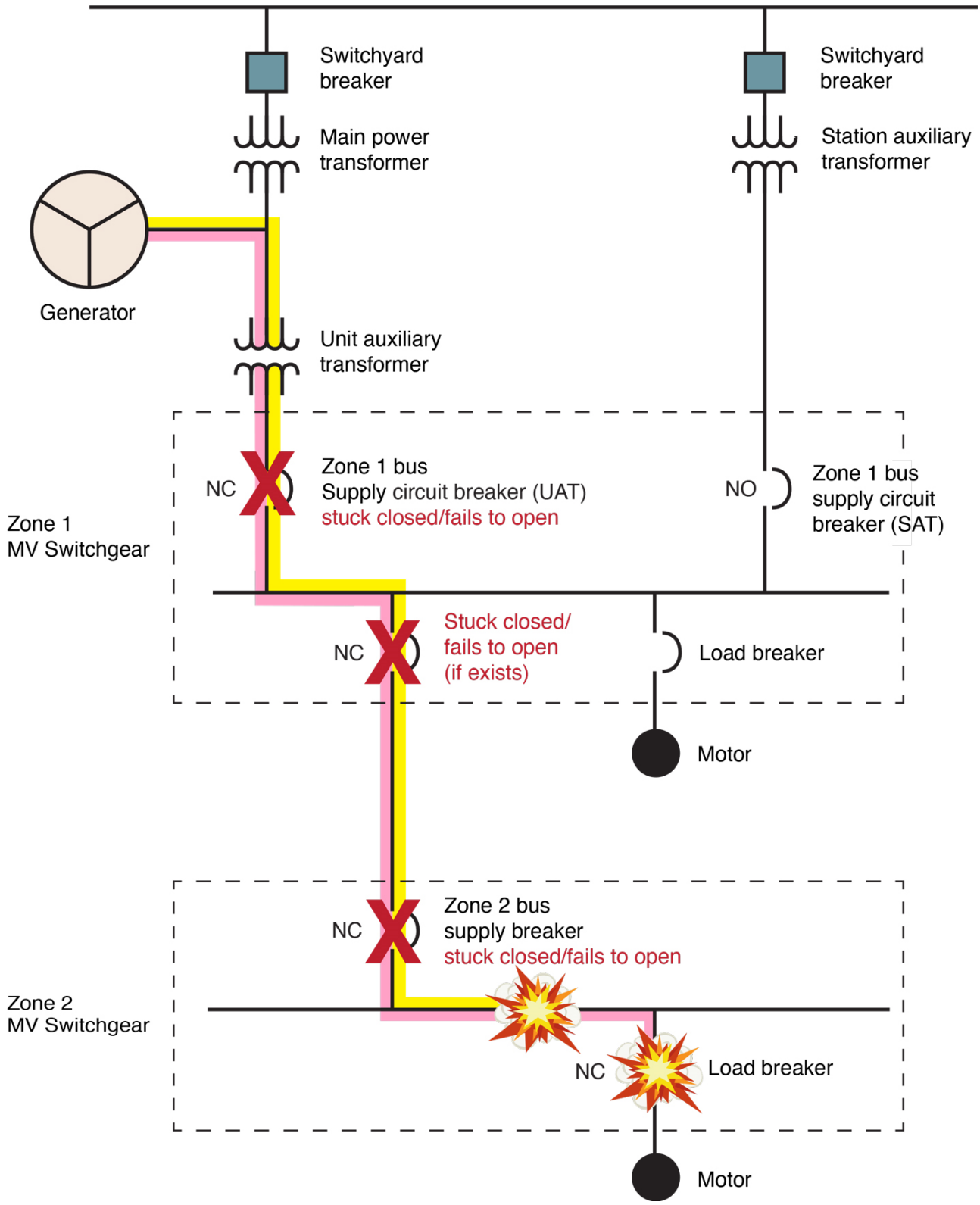

Figure 6-5
Example of Generator Fed Fault (fault on Zone 2 with at least three independent failures)

- SAT: This end state is used for energy feeding the fault fed from the SAT. Although the SAT has differential protection (87), if this is successful, there is no HEAF. A conservative assumption in the modeling of SAT faults is that differential protection (87) is failed, and backup protection (time overcurrent (51) relay) is credited. This ZOI is modeled as a stiff source with no decay portion. Figure 6-6 shows a fault on the Zone 1 MV switchgear bus supply breaker fed by the SAT.

  The time regimes for the SAT are:

  - 0-2 seconds – modeled based on FDS runs for 2 second stiff
    - Total energy: 68 MJ
  - 2.01-3 seconds – modeled based on FDS runs for 3 second stiff
    - Total energy: 101 MJ
  - 3-4 seconds – interpolated based on 3 and 5 second stiff
    - Total energy: 135 MJ
  - Greater than 4 seconds – modeled based on FDS runs for 5 second stiff
    - Total energy: 169 MJ

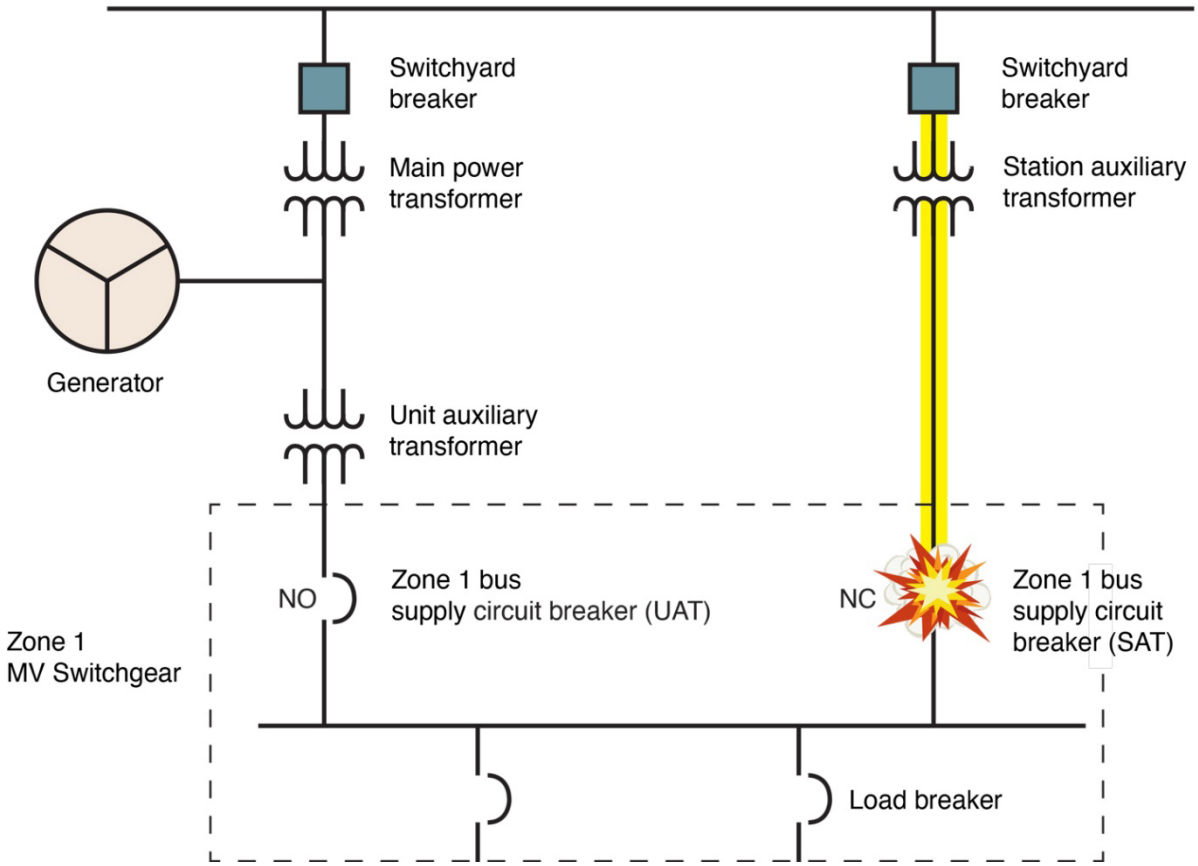

Figure 6-6
SAT Fed Fault

- Supply breaker limited (SBL): An end state for HEAFs not relying on the auxiliary power transformer fault protection to clear a fault. In a supply breaker limited HEAF, the upstream supply circuit breaker successfully interrupts the fault which prevents the fault from cascading further up the MV electrical distribution system to the auxiliary power transformer backup protection scheme. This includes Zone 1 main bus bar and load faults interrupted by the Zone 1 bus supply circuit breaker, Zone BD1 fault interrupted by the Zone 1 supply circuit breaker, Zone 2 bus supply circuit breaker fault interrupted by the Zone 1 bus supply circuit breaker, Zone BD2 interrupted by the Zone 2 bus supply circuit breaker, and Zone 2 main bus bar and load faults interrupted by the Zone 2 bus supply circuit breaker. Two durations of SBLs are modeled (one for the Zone 1 bus supply breaker interrupting at 4 seconds and one for the Zone 2 bus supply breaker interrupting at 2 seconds. The timing for each was determined by an aggregate review of NPP plant protection and coordination calculations as summarized in Table 3-2.

  Figure 6-7, Figure 6-8, and Figure 6-9 show the potential supply breaker limited variations that exists for Zone 1 and Zone 2 MV switchgear. Figure 6-7 shows a fault point on the main bus (yellow) or on the load breaker (pink) that is successfully cleared by the Zone 1 bus supply circuit breaker. Figure 6-8 shows a fault point on the Zone 2 bus supply circuit breaker that is interrupted by the Zone 1 bus supply circuit breaker. Figure 6-9 shows a fault point on the main bus (yellow) or on the load breaker (pink) that is successfully cleared by the Zone 1 bus supply circuit breaker.

  - Supply breaker limited 4 seconds (conceptually shown in Figure 6-7 and Figure 6-8). Four seconds is chosen as an upper limit of the time duration it takes for a Zone 1 switchgear supply circuit breaker to interrupt a downstream fault (either in Zone 1 or as selectively coordinated with the Zone 2 supply circuit breaker). This interpolated based on 3 and 5 second stiff source FDS runs.

    - Total energy: 135 MJ

  - Supply breaker limited 2 seconds (conceptually shown in Figure 6-9). Two seconds is chosen as an upper limit of the time duration it takes for the Zone 2 switchgear supply circuit breaker to operate given a downstream fault. From the FDS simulations, this was modeled based on 2 second stiff source runs.

    - Total energy: 68 MJ

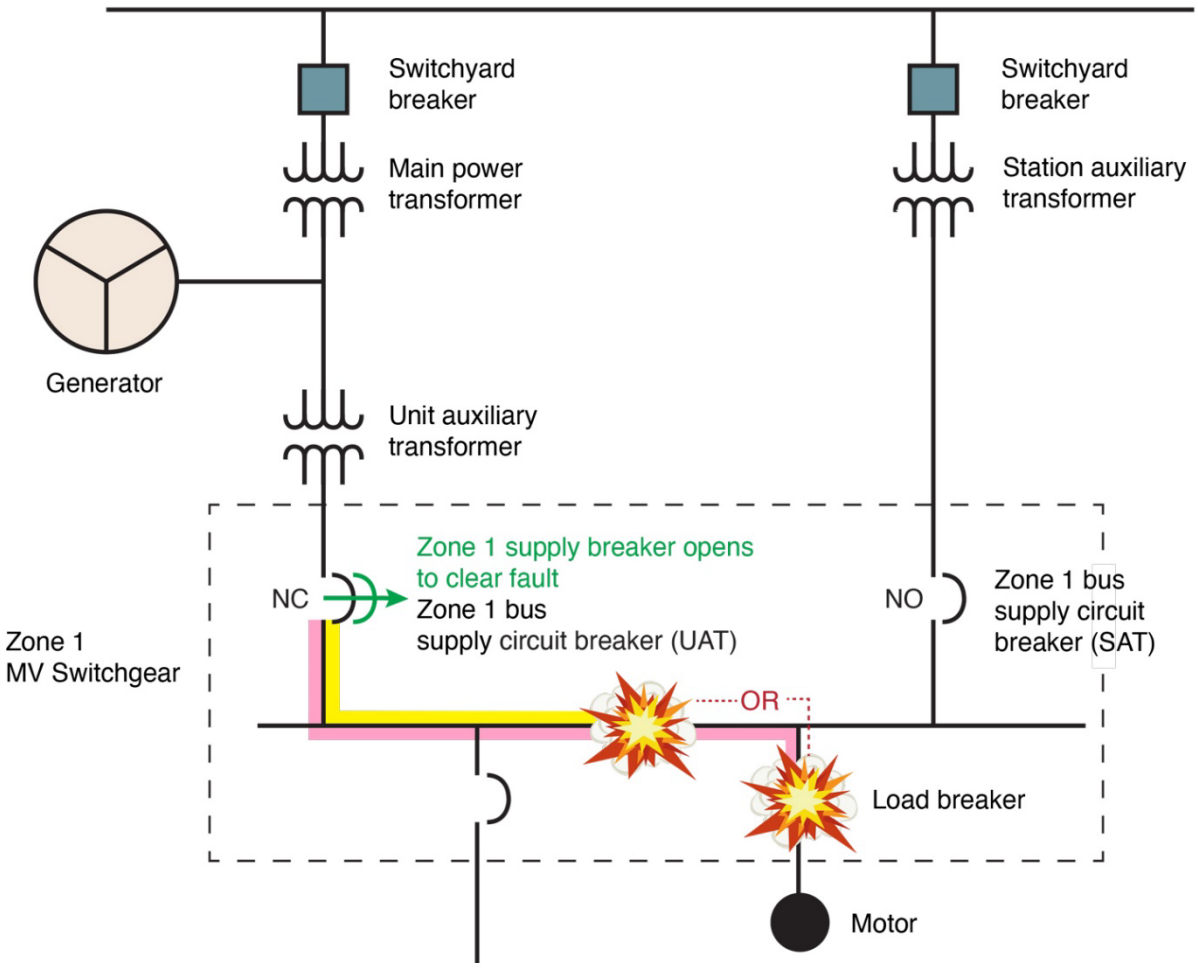

Figure 6-7
Zone 1 Supply Breaker Limited Fault (fault on Zone 1 MV switchgear)

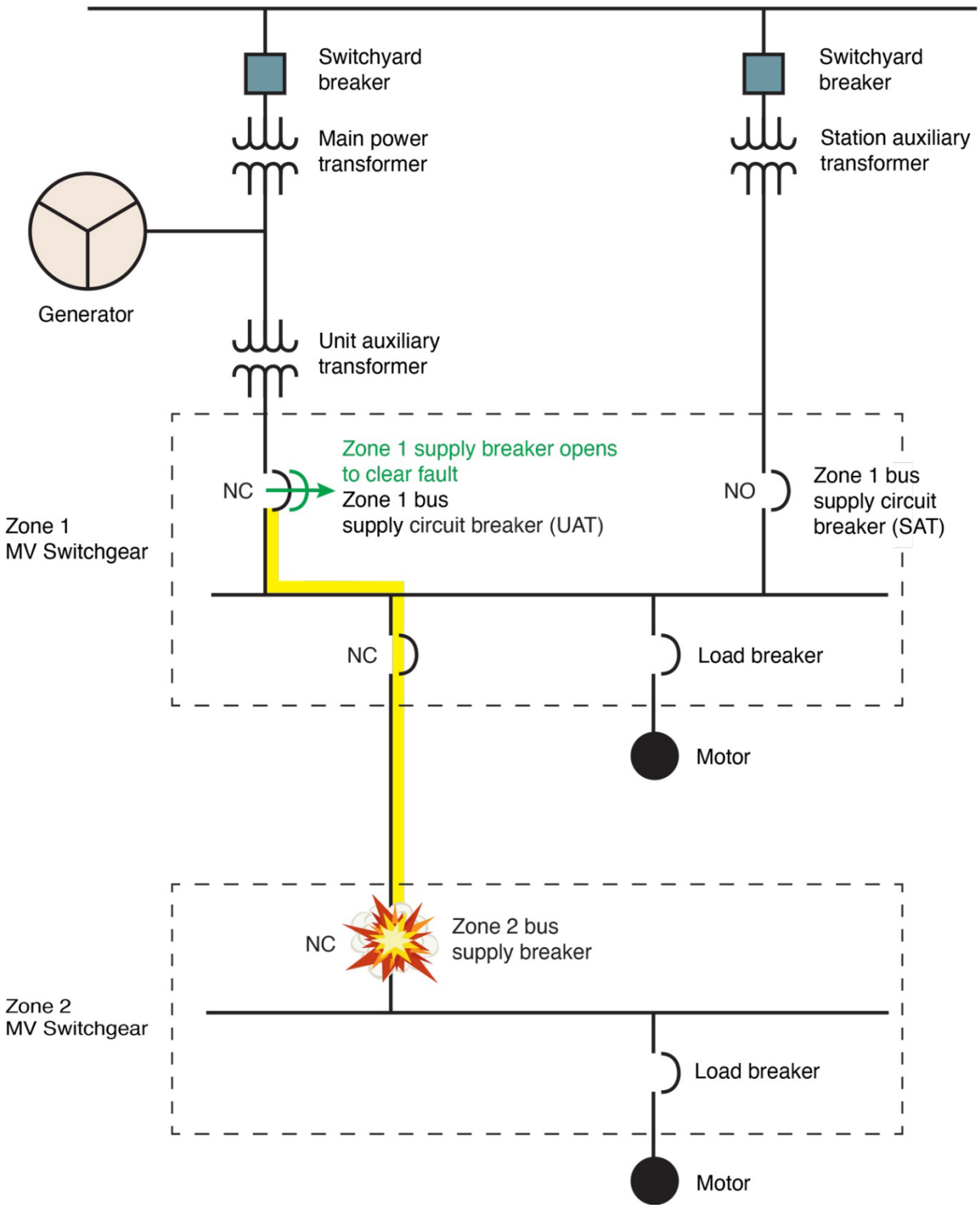

Figure 6-8
Zone 1 Supply Breaker Limited Fault (fault on Zone 2 MV switchgear)

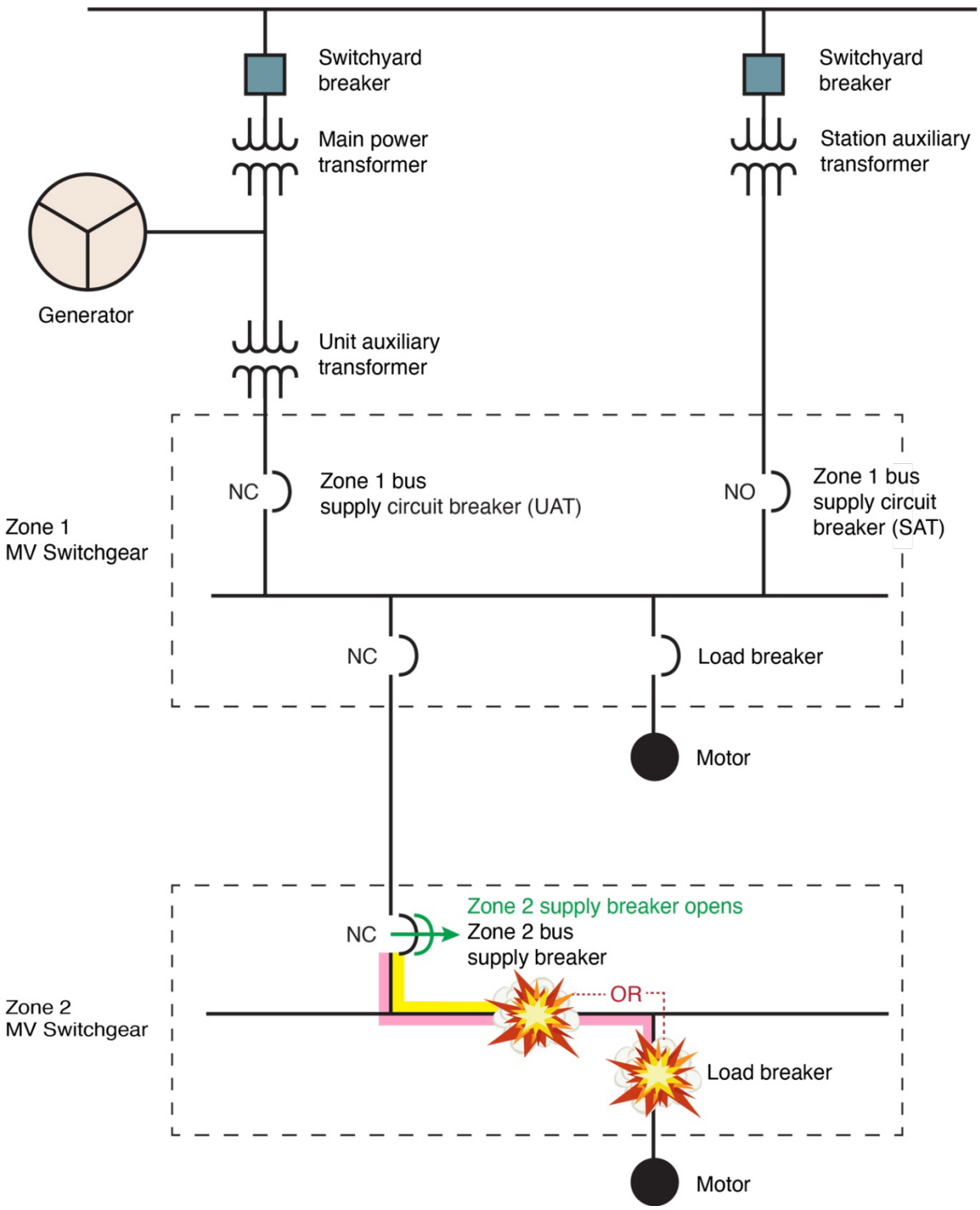

Figure 6-9
Zone 2 Supply Breaker Limited Fault (fault on Zone 2 MV switchgear)

As a final note, stiff energy (constant current arcing faults) is ascribed to classical short circuits that are fed by an infinite source limited by the impedance of the upstream transformer(s). These faults are of constant current until interrupted by the electrical distribution system (EDS) protection scheme (e.g., differential (instantaneous) or time overcurrent relays), which define the

duration of constant current arcing faults. For conservatism, in electrical studies, the fault location is modelled as zero-impedance fault (commonly referred to as “bolted” fault). However, not all faults are zero-impedance and are referred to as “arcing” fault. For medium voltage systems, the fault current magnitude is typically 85% of a “bolted” fault. Nonetheless, they are still considered a constant current arcing fault “stiff” source for the duration of the fault.

Instantaneous protections system will limit fault duration such that the energy will not rise to the level of a HEAF (typically cycles). On the other hand, depending on fault clearing time of time overcurrent protection system, the let-through energy can achieve that of a HEAF (typically one or more seconds depending on the equipment).

6.4 How to Determine Fault Clearing Timing

Development of the fault zones for the EDS in Section 3, allows for the usage of a FCT based on a NPPs protection and coordination calculation protection scheme settings to limit the arcing fault energy below the industry maximum observed (Figures 3-3, 3-4 and Table 3-2). The FCTs to determine include:

- Zone 1 MV switchgear “stuck” bus supply circuit breaker with interruption by the upstream transformer backup time overcurrent (51) device. This is the auxiliary transformer protection speed of operation. Section 3.2.1 describes the UAT transformer protection and FCT range and Section 3.2.2 describes the SAT protection and FCT range. This FCT represents how long a fault outside the differential (or instantaneous) protection (87) of the auxiliary power transformer would take to trip the generator and/or the switchyard breakers. This FCT applies to the following fault zones:
    - For UAT fed scenarios in Zone 1 load/main bus bar, Zone 2, BD1, and BD2
    - For SAT fed scenarios in Zone 1, Zone 2, BDSAT, BD1, and BD2

  This FCT is calculated for each auxiliary power transformer (UAT or SAT) and the same FCT is utilized for all downstream zones powered by that auxiliary power transformer.

- Zone 1 MV switchgear bus supply circuit breaker. This FCT is the speed in which the switchgear supply circuit breaker will operate given a “stuck” load circuit breaker and is described in Section 3.2.3. This is utilized in determining a refined fault clearing time for the “Supply breaker limited” (SBL) of the Zone 1, Zone BD1, or Zone 2 bus supply circuit breaker if the bounding 4 second ZOI requires refinement. This step is not necessary if the use of the default/general SBL fault duration is acceptable.

The FCTs related to the Zone 1 MV switchgear “stuck” bus supply circuit breaker backup protection was provided by U.S. industry during the industry-wide survey related to HEAFs with the presence of aluminum. The high-level results of the survey are documented in EPRI 3002020692 [44] and plots of the ranges of FCTs are reproduced in Figures 3-3 and Figure 3-4.

Section 6.4.1 describe the stepwise process to determine the FCTs.

6.4.1 Zone 1 Medium Voltage Switchgear Bus Supply Circuit Breaker Backup Protection (Stuck Breaker)

When the Zone 1 switchgear bus supply circuit breaker is unable to clear the fault (i.e., stuck breaker), the next level of upstream protection is required to interrupt the fault. This next level upstream protection is typically the auxiliary power transformer SAT or UAT time overcurrent protection (e.g., transformer primary side (51) or a 51G, 51N relay). The instantaneous SAT or

UAT differential protection (87) is not credited as the fault is considered outside of the differential (87) zone of protection or assumed failed along with the bus supply circuit breaker cubicle.

To determine the FCTs, perform the following steps:

1. Using the station one-line diagrams, identify Zone 1 MV switchgear and its associated upstream power transformers (UAT and/or SAT).
    a. Zone 1 switchgear typically has two power supplies (bus supply circuit breakers), one for normal alignment at power and a second supply typically used during shutdown or when the normal supply transformer is taken out for maintenance. The analyst needs to consider both for the screening level (most bounding configuration) or configuration specific ZOIs (both normal and secondary supplies).
2. For each Zone 1 MV switchgear, identify the normal and secondary bus supply circuit breakers and trace upstream to the respective power transformer (either UAT or SAT). (Emergency diesel generators (EDG) output circuit breakers are not in scope, as these are treated as load breakers in the HEAF analysis).
3. Obtain the associated time-current-characteristic (TCC) curve(s) from the station protection and coordination calculations for each Zone 1 MV switchgear/power transformer line up (UAT and/or SAT).
4. Obtain the available short-circuit (ASC) at each Zone 1 MV switchgear. ASC may be provided on the TCC curve or determined from a separate station short-circuit current calculation.
    a. Caution: Some TCC curve plots display the short-circuit withstand rating of the switchgear as the ASC which may be higher than actual. Use the calculated ASC when determining the FCT for Zone 1 MV switchgear bus supply circuit breakers.
    b. If multiple ASC values are provided (e.g., normal, LOCA, EDG surveillance, etc.), select the ASC associated with Mode 1 normal operation.
    c. If the secondary alignment has a different ASC value, that value is needed for the secondary Zone 1 MV switchgear alignment.
5. Identify the time overcurrent (51) relay curve associated with the power transformer (UAT or SAT) feeding the Zone 1 MV switchgear bus supply circuit breaker.
6. Identify the ASC on the horizontal axis and draw a straight line up until it intersects with the 51 time overcurrent relay associated with the transformer. Ensure the voltage of the TCC plot is the same voltage as the Zone 1 MV switchgear, otherwise the ASC will have to be normalized to the plot voltage.
7. At the intersection of the 51 time overcurrent relay and ASC, draw a horizontal line to the left to determine the FCT from the vertical axis (time).
8. Repeat for the secondary Zone 1 MV switchgear/power transformer alignment.

In summary, the FCTs are where the transformer time overcurrent protection (51 relay) curve intersects with the ASC. The ranges of FCTs for U.S. NPPs are shown in Figures 3-3 and 3-4. Example 1 shows the FCT calculated for a SAT 51 relay.

Example 1:

This example uses the TCC curve in Figure 6-10.

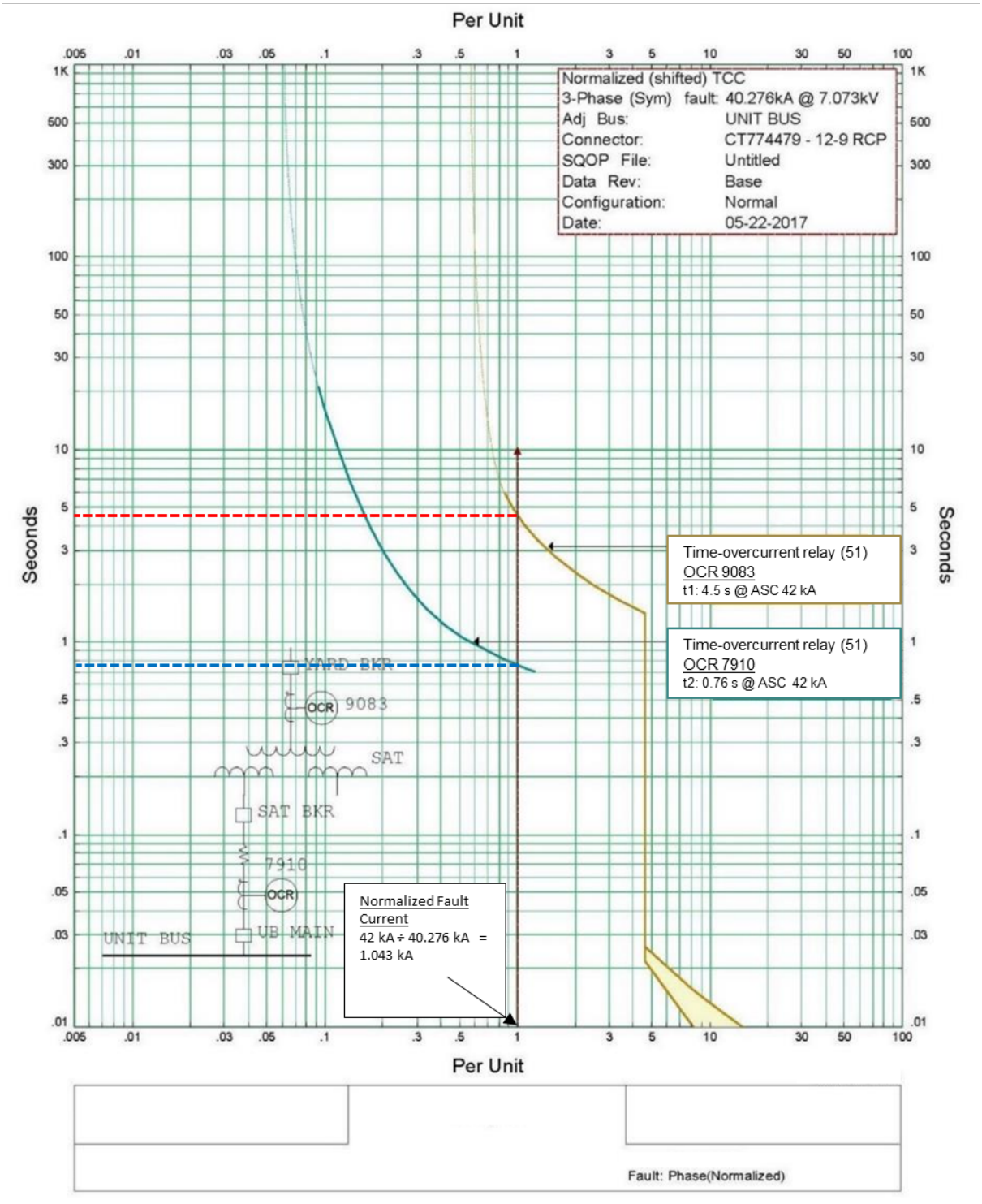

Figure 6-10
Example 1 TCC Curve

- Available fault current has been normalized to 1.0 per unit (i.e., 40.276kA = 1.0 per unit on the SAT secondary at a voltage of 7.073kV).
    - Fault current: 1.043 kA * 40.276 kA = 42kA (brown vertical line on Figure 6-10)

- The time overcurrent (51) relay of interest is 9083 (yellow curve on Figure 6-10) that trips the SAT circuit breaker
    - In some cases, this relay will only trip the switchyard breakers on the primary side of the transformer if no SAT breaker exists (similar for UAT, plus generator trip).
- The point at which the SAT circuit breaker and/or switchyard circuit breakers will trip open is 4.5 seconds on the TCC curve. See the horizontal red dashed line on Figure 6-10.

6.4.2 Zone 1 Medium Voltage Switchgear – Supply Breaker Limited FCT

In HEAF scenarios where the fault originates in or downstream of the load circuit breaker of the Zone 1 MV switchgear and a failure occurs that prevents the load circuit breaker from opening on demand (e.g., stuck breaker), then the MV switchgear bus supply circuit breaker will trip open on a time overcurrent (51) relay. In addition, a fault on the main bus bar with an operable supply breaker will also clear the fault on a time overcurrent (51) relay.

The FCT is limited by how fast the supply breaker will trip open. Section 3.2.3 summarizes a review performed for a sample of United States NPPs and an upper bound of 4 seconds was determined for the time it takes for the Zone 1 MV switchgear bus supply circuit breaker to operate. The ZOIs that assume the Zone 1 supply breaker operates are based off of a 4 second Zone 1 bus supply breaker FCT.

Recognizing the 4 seconds may be on the higher end, this section provides the analyst the steps necessary to determine the Zone 1 bus supply breaker FCT. This step is optional since the upper end of the FCT is used as a default in the ZOI tables. If the Zone 1 supply breaker FCT is 3 seconds or less, less severe supply breaker limited ZOIs can be used in Sections 8 and 9 if more refinement is necessary. To determine the FCT, follow steps 1 through 8 in Section 6.4.1 with one exception. In step 5, instead of identifying the time overcurrent (51) relay associated with the UAT or SAT, identify the Zone 1 MV switchgear bus supply circuit breaker time overcurrent (51) relay. The FCT is where the switchgear supply circuit breaker time overcurrent protection (51) relay curve intersects with the ASC.

Example 2 shows the FCT calculated for the normal supply circuit breaker of the MV switchgear.

Example 2:

This example uses the TCC curve in Figure 6-1.

- Available fault current has been normalized to 1.0 per unit (representing 40.276kA at 7.073kV).
    - Fault current: 42 kA (brown vertical line on Figure 6-10).
- The time overcurrent (51) relay of interest is 7910 (blue curve on Figure 6-10) that trips the UB MAIN circuit breaker.
- The point at which the UB MAIN circuit breaker will trip open is shown as 0.76 seconds on the TCC curve. See the horizontal blue dashed line on Figure 6-10.

6.5 Post-HEAF Ensuing Fire (Switchgear and Load Centers Only)

HEAFs have two distinct phases; the energetic fault and the post-HEAF ensuing fire.

Immediately following the energetic blast, the ensuing fire has a heat release rate (HRR) equal to the 98th percentile associated with switchgear and load centers. From NUREG-2178 Volume 1[45] the 98th percentile HRR is 170 kilowatts (kW). For detailed fire modeling, the fire

begins immediately following the arcing fault is at t=0 (e.g., at the start of the fire scenario). The ensuing fire timing is modeled as:

- Growth period: 0 minutes (none)
- Steady burning period: 8 minutes
- Decay period: 19 minutes

The HRR timing profile is shown in Figure 6-11.

For the ensuing fire, do not credit obstructions in either the vertical or horizontal directions. The arcing phase of the HEAF can damage (e.g., open) faces with external ZOIs (top, back, front, sides). Due to the breach of the cabinet, do not use the obstructed plume in NUREG-2178 Volume 1 [45] or obstructed radiation in NUREG-2178 Volume 2 [46] methodologies for the post-HEAF fire ZOI.

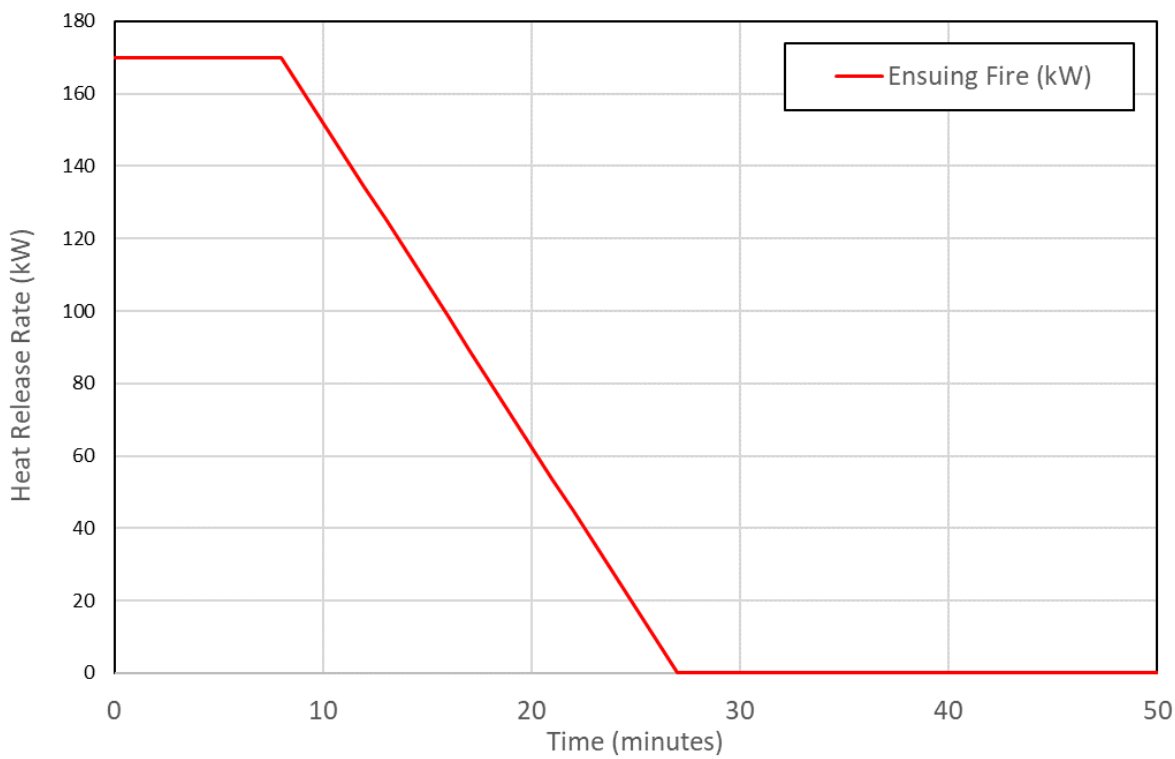

Figure 6-11
Post-HEAF Ensuing Fire HRR Timing Profile

As concluded in [15], the arcing phase of the HEAF will not ignite secondary combustibles/cable targets external to the source switchgear or load center. Secondary combustibles can be ignited from the post-HEAF ensuing thermal fire. The guidance for determining the ignition and modeling of secondary combustibles due to fire are described in:

- FAQ 16-0011 [47], bulk cable tray ignition may occur during the following conditions:
    - Flame impingement,
    - Plume temperature of 500°C, or
    - Radiant heat flux of 25 kW/m^2

- NUREG/CR-6850 [1] and NUREG/CR-7010 [48] for spread and propagation

6.5.1 Fire Spread Between Adjacent Cabinets

For a HEAF, the fire spread between adjacent vertical sections is only modeled for medium voltage switchgear scenarios with an arc energy greater than 101 MJ. HEAFs with an arc energy greater than 101 MJ can breach the sides and expose the combustible contents of an adjacent section to an energy flux high enough to sustain ignition. Fire propagation is likely in the adjacent vertical sections. The basis for this treatment is as follows:

- Testing by Sandia [53] indicate that sustained ignition after a HEAF requires energy fluxes greater than 30 MJ/m². The 30 MJ/m² fragility ZOI for HEAFs with an arc energy of 101 MJ or less is 0.5 ft (see Table 8-4 and Table 8-6), which indicates that the exposure is marginally greater than the sustained ignition threshold at the boundary of the adjacent vertical section. Given, this sustained ignition in this section is not expected.
- Fire propagation between adjacent vertical switchgear sections is not postulated unless there are significant openings in the shared boundary (greater than 5%) given the low fuel load associated with switchgear [46]. The openings in the switchgear sides for HEAFs with an arc energy less than or equal to 101 MJ are much smaller than 5% given the side boundaries are beginning to breach when the HEAF is cleared.

Based on these observations, the WG concluded that fire propagation between vertical sections should only be postulated when the HEAF arc energy is greater than 101 MJ.

For HEAF scenarios where fire spread is postulated:

- Fire spread is modeled in each direction that has an adjacent vertical section, with a maximum of three vertical sections ignited (HEAF section plus a single adjacent section on left and a single adjacent section on the right of HEAF origin). Note that this is this is different from the guidance provided in NUREG-2178 Volume 2 in which a maximum of two vertical sections ignite. This is because the HEAF is considered a more severe ignition factor and the side breach pattern for medium voltage switchgear is generally symmetric [46]. Fire propagation beyond the adjacent vertical sections is not postulated based on NUREG-2178 Volume 2 guidance [46].
- The heat release rate for the vertical section with the HEAF originates and the adjacent section(s) is shown in Figure 6-12.
- When fire spreads to the adjacent vertical section; the timing profile in the adjacent section is a growing fire [58]. The ignition time for all ignited sections is equal to the start time of the HEAF. The initiating section reaches the peak heat release rate at t = 0, and the heat release rate in any adjacent section(s) ignited starts growing at t=0 and reaches a peak at t= 12 minutes.

Fire spread between adjacent vertical sections does not occur for:

- Medium voltage switchgear with an arc energy less than or equal to 101 MJ
- Load centers (low voltage switchgear)

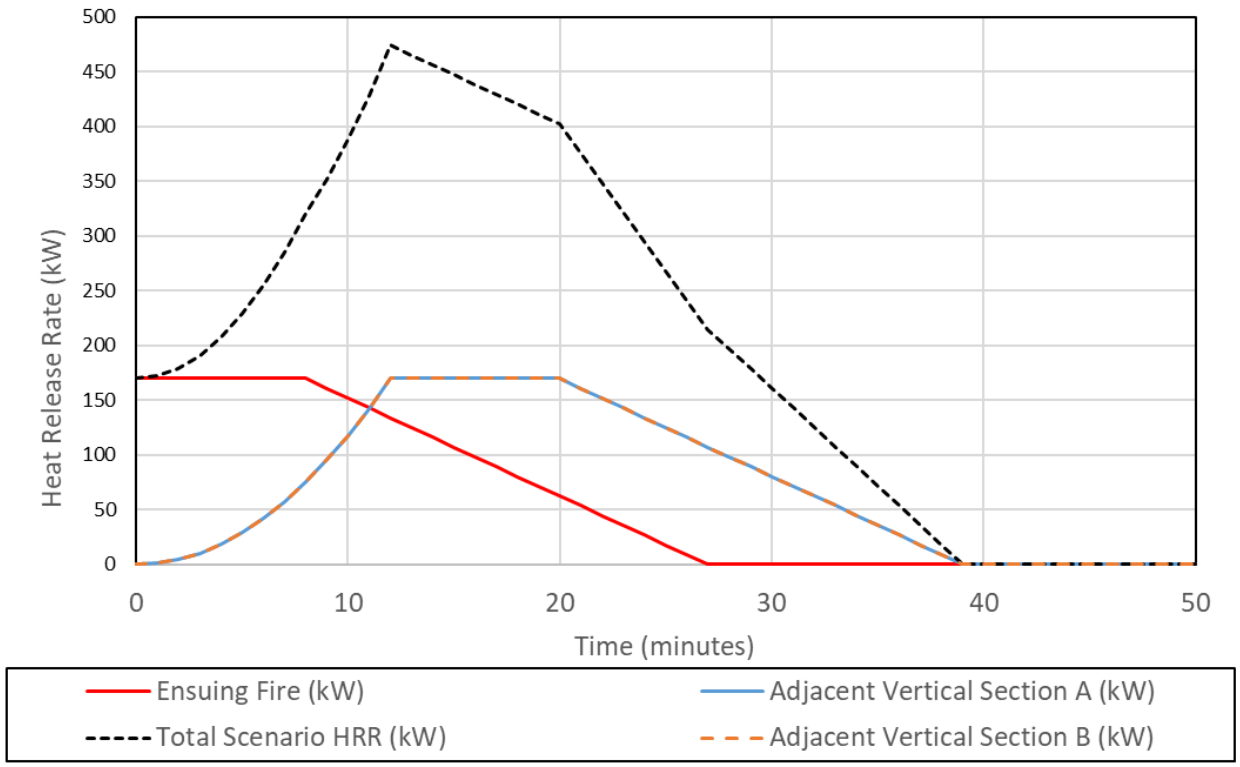

Figure 6-12
Source Vertical Section, Adjacent Vertical Sections, and Scenario Total Ensuing Fire HRR

7
HIGH ENERGY ARCING FAULTS IN LOAD CENTERS

7.1 Load Center HEAF Scenarios

HEAFs in load centers are modeled in two-phases; the energetic phase (analyzed in Fire Dynamics Simulator and described in detail in this section) and the post-HEAF ensuing fire (discussed in Section 6.5). The combination of the energetic phase plus the ensuing fire determines the totality of the HEAF ZOI.

Due to the instantaneous trip protection (see Section 3.11), faults on the load side of the load breaker are expected to clear rapidly (the energy is more typical of an arc flash), as such the low-voltage HEAF frequency (bin 16.a) is only apportioned to the load center supply circuit breakers. No frequency is apportioned to load breakers. Given the lack of U.S. operating experience, experimental testing evidence, and power distribution arrangement, faults downstream of the load center supply circuit breaker are more likely to result in an arc flash and not rise to the energy level of a HEAF.

Section 3.11.4 summarizes the fault locations and durations in Zone 3 (load centers). From the supply side branch in Figure 3-23, the fault current lower than the tripping threshold of the time overcurrent (51) relay is the sole scenario (since no scenarios are postulated downstream of the supply circuit breaker). This scenario closely resembles FEDB 50935. The electrical data documented in the root cause analysis serves as the basis for the energy, fault currents, and duration.

7.2 Summary of FDS Cases and Insights for the Energetic Phase of Load Center HEAFs

As described in Section 6 and the FDS ZOI report [16], the working group developed FDS input files for low-voltage switchgear types using an arc power profile derived from FEDB 50935. Based on the EPRI survey [44], the WG identified the different load center designs and geometries with aluminum, including those developed by ABB, GE, Westinghouse, Allis Chalmers, Powell Nelson, LVME, and Sorgel. The GE/ITE K Line design was selected by the WG as a representative design for load centers (including copper and aluminum conductors) and is used as the basis for the geometry in the FDS analysis [16].

The FEDB 50935 arc power profile was idealized as a two-stage constant arc power with a total arc energy of 90 MJ [16]. Two primary fault locations within the load centers are used to develop the energetic portion of the ZOIs:

- Arc that originates at a middle-height compartment breaker and migrates to the bus bar compartment at the same height after 20 s and continues in this compartment for an additional 21 s.
- Arc that originates at a top compartment breaker and migrates to the bus bar compartment at the same height after 20 s and continues in this compartment for an additional 21 s.

Eight baseline cases use the FEDB 50935 arc power profile (with both aluminum and copper electrode material) to confirm the ZOIs are applicable for other fault locations and bus compositions. These locations include:

- Top compartment circuit breaker
- Middle-height compartment circuit breaker
- Top compartment bus bar
- Middle compartment bus bar

In addition, 24 sensitivity cases are developed for aluminum and copper electrode materials using constant duration arc power profiles ranging from 2 – 6 s with total arc energies ranging from 28 - 84 MJ to further confirm the applicability of the energetic ZOIs determined from the baseline simulations. The 6 s arc power profile roughly corresponds to the maximum arc energy estimated for FEDB 50935 (90 MJ) [16]. The shorter duration arc profiles use the same power and result in a lower total energy.

The FDS results are used to develop energetic ZOIs for targets with 15 MJ/m² and 30 MJ/m² fragilities. The FDS results are reviewed to determine the ZOI on the sides (left/right), front, back, and top. For load centers, not all directions have an external ZOI (see Figure 7-1 – load centers do not have front and back ZOIs as determined from the FDS results). The ZOIs for baseline and sensitivity simulations are provided in Appendix D of this report.

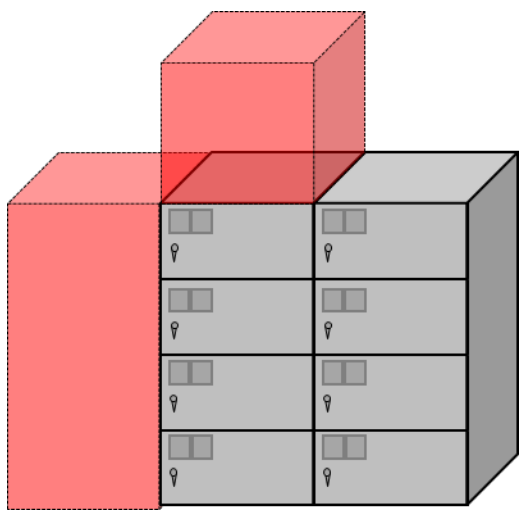

Figure 7-1
Load Center ZOI Configuration for a Single Vertical Section

Two significant findings were identified in the FDS ZOI report that simplify the number of ZOIs required to characterize the hazard potential of the HEAF [16]:

- The bus-bar material composition does not have a significant effect on the ZOI. The ZOIs are within the uncertainty range for copper and aluminum bus-bar simulations for a given fault location, fault type, and fault energy. As a result of this finding, the ZOIs developed are independent of the bus bar material.
- The ZOI results are sensitive to the distance between the target and the arc location and to the number of enclosure boundaries between the arc and the target.

Based on these observations, the WG developed ZOIs for load centers based on location (end location and an internal location) and supply breaker elevation for 15 MJ/m² and 30 MJ/m² fragility targets. The ZOIs are applicable to all load center designs.

7.3 Energetic Zone of Influence for Load Centers (Zone 3)

Load center HEAFs are modeled with the fault initiated at the supply circuit breakers. The FDS simulations show the arc only breaches the enclosure when there are limited barriers and distance between the arc and the enclosure surface. In Figure 7-2, a HEAF in supply circuit breaker B (located at the end of the load center) will breach the end of the enclosure, however, there are substantial barriers between the fault location and the front, back, and top. Similarly, a HEAF in supply circuit breaker D (located at the top of the cabinet) will breach the top of the enclosure, and it is impeded by internal barriers on the sides, front, and back.

For load center supply circuit breaker HEAFs, four location dependent ZOIs are developed and reported in Table 7-1. The insights on the ZOIs are:

- A supply circuit breaker located at the top and the end of the load center, location A in Figure 7-2, has a ZOI externally in the horizontal direction and in the vertical direction.
- A supply circuit breaker located at the mid or lower elevation, location B or C in Figure 7-2, has a ZOI only in the horizontal direction.
- A supply circuit breaker in the top interior (at least one vertical section on either side), location D in Figure 7-2, has an external ZOI in the vertical (top) direction.
- A supply circuit breaker in the mid or lower elevation, location E or F in Figure 7-2, does not have a ZOI external to the switchgear. For this case, an ensuing fire should still be postulated at the supply circuit breaker. See Section 6.5 for modeling the ensuing fire.

If the location of the supply circuit breaker is unknown, the ZOI should use the bounding location based on fire PRA targets (with horizontal and vertical ZOI components).

The ZOIs are reported in Table 7-1. Figure 7-3 depicts the overhead view for locations where the supply section is on the end of the load center and a second location where the supply section is on the interior (e.g., there is at least one vertical section on either end).

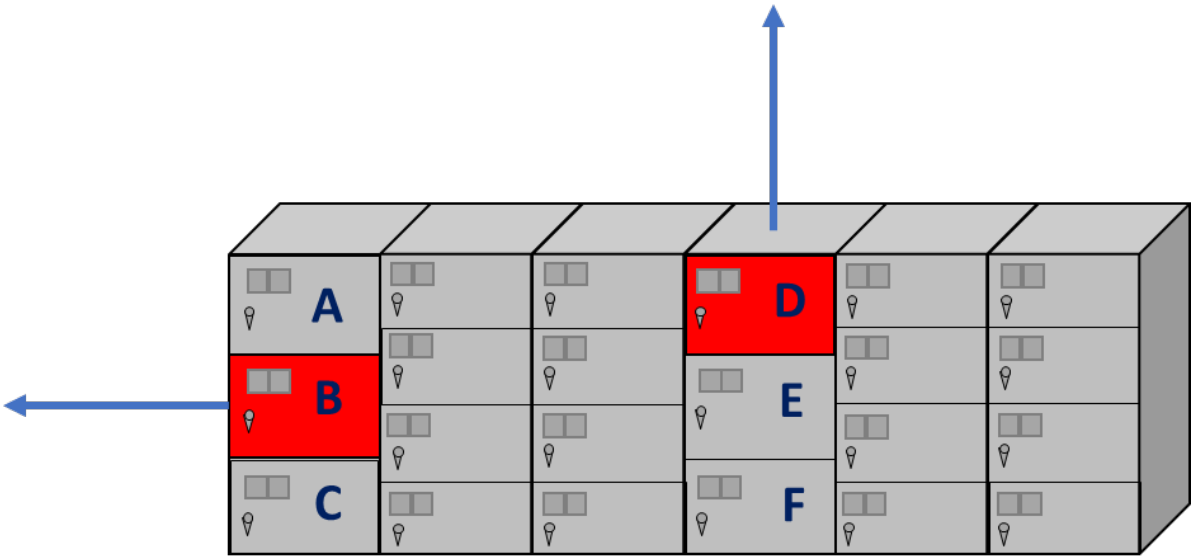

Figure 7-2
Load Center Supply Breaker Locations

Figure 7-3
Overhead View of Load Center Energetic ZOIs

Table 7-1
Load Center Energetic ZOIs

Load center supply circuit breaker location (from Figure 7-2) and target fragility	Arc Energy (MJ)	Back/Front	External Side (feet)	Top (feet)
A - end location, upper elevation: 15 MJ/m^2	90	None	2.5	2
A - end location, upper elevation: 30 MJ/m^2	90	None	1.5	1
B and C – end location, lower elevation: 15 MJ/m^2	90	None	2.5	None
B and C – end location, lower elevation: 30 MJ/m^2	90	None	1.5	None
D - interior, upper elevation: 15 MJ/m^2	90	None	None	2
D - interior, upper elevation: 30 MJ/m^2	90	None	None	1
E and F – interior, lower elevation: 15 MJ/m^2	90	None	None	None
E and F – interior, lower elevation: 30 MJ/m^2	90	None	None	None

8
HIGH ENERGY ARCING FAULTS IN MEDIUM VOLTAGE SWITCHGEAR

HEAFs in medium voltage switchgear are modeled in two-phases; the energetic phase (analyzed in Fire Dynamics Simulator and described in detail in this section) and the post-HEAF ensuing fire (discussed in Section 6.5). The combination of the energetic phase plus the ensuing fire determines the totality of the HEAF ZOI.

Faults in medium voltage switchgear (bin 16.b) follow a graded approach to provide the analyst a coarse screening, but also the flexibility to analyze using configuration specific energetic ZOIs when more detail is necessary. The screening ZOIs are applied as a bounding dimension in the horizontal and vertical direction around the faces of the switchgear. When more detail is needed, configuration specific ZOIs can be used in conjunction with the split fractions developed in Appendix C. These configuration specific ZOIs are dependent on the fault location, arc energy, and fault clearing time. Dimensions are provided for the sides (left/right), front, back, and vertical (top). In certain configurations, such as vertical-lift circuit breakers, additional refinement on the sides (left/right) and back are also provided.

8.1 Differences between Zone 1 and Zone 2 MV HEAF Scenarios

Due to Zone 1's proximity directly downstream of an auxiliary power transformer and the potential for a single point of failure on the Zone 1 bus supply circuit breaker, the frequency of Zone 1 faults is higher than in Zone 2. This is addressed in the frequency apportionment in Section 5.2.2.2, which shifts the frequency towards the Zone 1 switchgear.

In the configuration specific approach, the split fractions in Zone 1 and Zone 2 are both heavily weighted towards the supply (both normal and secondary/alternate). Although the total split fractions (0.85 and 0.86 for Zone 1 and Zone 2, respectively) are biased towards the supply sections, the type of faults expected in Zone 1 and Zone 2 differ. Due to a lesser number of circuit breakers between the Zone 1 switchgear and the auxiliary transformer, faults in Zone 1 are most likely fed directly from the auxiliary transformer. In Zone 2, the Zone 1 supply circuit breaker provides some redundancy against faults fed from the auxiliary transformer. Zone 2 is much more likely to have a "supply breaker limited" fault. For scenarios where the Zone 1 supply circuit breaker can interrupt (Zone 1 main bus bar and loads and Zone 2 supply sections) the supply circuit breaker fault is postulated at 4 seconds. For Zone 2 main bus bar and loads the supply circuit breaker fault is postulated at 2 seconds (interrupted by the Zone 2 bus supply circuit breaker). Supply circuit breaker faults in the Zone 2 main bus bar and load portion have a higher likelihood of a supply breaker limited fault with smaller consequences (ZOI) as compared to Zone 1.

The supply portion of Zone 1 is within the zone of transformer differential protection (87) (which operates with no inherent time delay). Although this protection exists on both the UAT and

SAT[9], for HEAF end states, only the portions within the UAT zone of differential protection are credited in this methodology. Of the four operating experience generator fed faults in the Zone 1 supply cubicle, all of them were quickly sensed by the UAT differential protection (87). Differential protection (87) is inherently credited in the ZOIs developed on the supply side of the supply breaker in Zone 1 (87). Faults downstream of the Zone 1 switchgear supply breaker are outside of the zone of differential protection, which results in additional time at a stiff energy period prior to entering the generator decay period. See Section 6.4 for determining the backup FCT.

8.2 Inputs for Quantification of MV Switchgear HEAF Scenarios

For MV switchgear HEAF scenarios, the first step is to properly assign the frequencies to individual switchgear. This step is necessary regardless of the level of detail analyzed for medium voltage switchgear. This is summarized in Section 8.2.1.

To make best use of the screening ZOIs (in Section 8.4), the analyst needs to identify the power supplies feeding the switchgear and their respective fault clearing times. This process is explained in Section 6.4.

If more detail is needed the analyst can use the event trees paired with the configuration specific ZOIs (detailed in Section 8.5 (Zone 1) and Section 8.6 (Zone 2)). Similar to the screening approach, the analyst identifies the normal and alternate supplies for the switchgear and determines the FCTs. The ignition frequency is then apportioned by switchgear location (normal supply, alternate supply and loads). Scenarios are postulated with a HEAF fed from a power transformer and where the fault is interrupted by the supply breaker (termed supply breaker limited). The default supply breaker limited ZOI is derived from bounding bus supply breaker opening times. If more refinement is necessary, the analyst can also determine the switchgear-specific bus supply circuit breaker opening time and use the anticipated fault clearing time for additional granularity in the ZOI selection.

8.2.1 Medium Voltage Switchgear Weighting Factor and Ignition Frequency

Prior to assigning a ZOI, the analyst should count MV switchgear banks, identify the zones, and apply the zone weighting factor to determine the scenario frequency. The methodology for assigning the zone weighting factor is in Section 5.2.2.2.

The zones for medium voltage switchgear are as follows:

- Zone 1: MV switchgear fed directly from either the SAT, UAT, or equivalent
- Zone 2: MV switchgear fed from an intermediate bus (e.g., Zone 1 MV switchgear)

Once the counts are known, the analyst should apportion 86% of the generic frequency to Zone 1 sub-frequency. Then the analyst should apportion the remaining 14% of the generic frequency to the Zone 2 sub-frequency. Once the sub-frequencies are determined the analyst can calculate scenario-specific switchgear frequencies by apportioning the sub-frequencies among the population of equipment within that particular zone.

[9] For faults on the SAT, differential protection (87) is assumed failed. If differential protection (87) is successful, the fault clearing time is unlikely to result in HEAF level consequences. To overcome this, the SAT differential protection (87) is postulated to fail. The analyst should use the backup FCT of the transformer to determine the ZOI selection.

A Zone 1 switchgear bank frequency is calculated as:

= (Bin 16.b frequency × Zone 1 Weighting Factor) × (Zone 1 MV switchgear bank / Σ of Zone 1 MV switchgear banks)

$= [(\lambda_{16.b} \times 0.86)] \times \left(\frac{Zone\ 1\ switchgear\ bank}{\Sigma\ of\ Zone\ 1\ Switchgear\ banks}\right)$

A Zone 2 switchgear bank frequency is calculated as:

= (Bin 16.b frequency × Zone 2 Weighting Factor) × (Zone 2 MV switchgear bank / Σ of Zone 2 MV switchgear banks)

$= [(\lambda_{16.b} \times 0.14)] \times \left(\frac{Zone\ 2\ switchgear\ bank}{\Sigma\ of\ Zone\ 2\ Switchgear}\right)$

8.2.2 Switchgear Power Supplies and Split Fractions

This section introduces the concepts of normal and alternate power supplies and explains the assignment of split fractions when using the configuration specific ZOIs in Section 8.5 and 8.6.

The normal supply is defined as the cubicle housing the bus supply breaker used during normal operating conditions. This can be fed from either the unit auxiliary transformer (UAT) or station auxiliary transformer (SAT). When analyzing the normal supply, this includes the incoming bus bars, circuit breaker, and main bus bar portions contained within the supply section.

The secondary supply is defined as the cubicle housing the bus supply circuit breaker available to power the medium voltage switchgear during off-normal conditions such as maintenance of the normal bus supply circuit breaker or associated transformer. For Zone 1 medium voltage switchgear, the secondary supply is typically from an SAT and may be part of an automatic bus transfer scheme if the normal supply is from the UAT. For Zone 2, the secondary supply may either be a bus-tie from another medium voltage switchgear or powered from another transformer. When analyzing the secondary supply, this includes the incoming bus bars, circuit breaker, and main bus bar portions contained within the supply section.

The loads include the remaining vertical sections not defined as supply sections (including load circuit breakers, empty cubicles, EDG, etc.). When analyzing the load sections, this also includes the main bus bar portion that runs along the length of the switchgear in the load sections.

Some switchgear may contain a vertical section associated with the EDG as shown in Figure 3-1. The energy associated with the EDG is not sufficient to produce damage commensurate with a generator or switchyard supply fed fault. Therefore, EDG supply vertical sections are analyzed with the load vertical sections.

The basis for the Zone 1 and Zone 2 split fractions are documented in Appendix C. The results are summarized as:

Zone 1 Split Fractions:

If there are two supplies; the split fractions are as follows:

- Normal: 0.57
- Secondary: 0.28

There may be configurations with either less than or more than two supplies. For these instances the split fractions assigned to the supply sections should be preserved.

If there is a single supply; add normal and secondary supply split fractions: 0.57 + 0.28 = 0.85

If there are three supplies, the normal supply split fraction remains unchanged (e.g., 0.57). The split fraction for the secondary supply, 0.28, is divided among the second and third supplies. This is summarized below:

- Normal: 0.57
- Supply 2: 0.28/2 = 0.14
- Supply 3: 0.28/2 = 0.14

Zone 2 Split Fractions:

The process of assigning split fractions for Zone 2 is the same as Zone 1, but the split fractions are different. The results are summarized below:

If there are two supplies, the split fractions are as follows:

- Normal: 0.54
- Secondary: 0.32

If there is a single supply; add normal and secondary supply split fractions: 0.54 + 0.32 = 0.86

If there are three supplies, the normal supply split fraction remains unchanged (e.g., 0.54). The split fraction for the secondary supply, 0.32, is divided among the second and third supplies. This is summarized below:

- Normal: 0.54
- Supply 2: 0.32/2 = 0.16
- Supply 3: 0.32/2 = 0.16

8.2.3 Vertical versus Horizontal Lift Breakers (for configuration specific ZOIs)

There are two main styles of medium voltage switchgear. The geometry of the cubicles can result in differences in ZOIs. The horizonal draw out circuit breakers typically provided the bounds for the ZOIs. For plants with vertical-lift circuit breakers, refinements can be considered in the side and back directions of the switchgear. The definitions and manufacturer/model of each style is explained below:

Vertical-lift style circuit breaker: Medium-voltage circuit breakers that rack in vertically. The only known vertical lift-style circuit breaker in use in United States NPPs is GE Magne-Blast, based on the EPRI survey [44].

Horizontal draw-out style breaker: Medium-voltage circuit breakers that rack in horizontally. The most common styles in United States NPPs based on the EPRI survey [44] include ABB (ITE), GE AMH Magne-Blast, and Westinghouse DHP breakers. The FDS runs are based on the ABB (ITE) HK breakers, but the use of the horizontal draw-out style breaker ZOIs are applicable for all other manufacturers of horizontal draw-out style breakers.

8.3 Summary of FDS Case and Insights for Medium Voltage Switchgear

As described in Section 6 and the FDS ZOI report [16], the working group developed FDS input files for a range of MV switchgear types, fault locations, total energies, fault profile and durations, and bus-bar compositions. These parameters are summarized in Table 8-1.

Table 8-1
FDS Simulation Parameter Ranges for Medium-Voltage Switchgear

Parameter	Range considered or configurations
Fault locations	• Main bus bar • Primary cable compartment bus or riser bus bar – load configuration • Primary cable compartment bus or riser bus bar – supply configuration • Circuit breaker connection stabs
Switchgear type	• Vertical lift circuit breaker • Horizontal draw-out circuit breaker
Fault profile and duration	• Constant-current fault (0 – 5 seconds) • Generator fed fault (15 seconds of decaying current) • Constant-current (0 – 5 seconds) with a generator-fed fault (15 seconds of decaying current)
Total fault energy	68 – 300 MJ
Bus-bar material composition	• Copper • Aluminum

The FDS input were evaluated using FDS Version 6.7.6 with application specific updates as described in the FDS ZOI report [16]. Not all permutations were evaluated; rather, combinations that represent realistic configurations and fault types. In addition, parameter combinations with similar arc locations, distances from the switchgear enclosure boundary, and number of enclosure boundaries between the fault and the exterior were consolidated into a single FDS simulation.

Overall, a total of 48 unique FDS input files and simulations were developed for the MV switchgear. The FDS results are used to develop ZOI for targets with 15 MJ/m² and 30 MJ/m² fragilities around the switchgear on the sides (left/right), front, back, and top (see Figure 8-1). The energetic ZOIs for the 48 simulations are provided in Appendix D of this report.

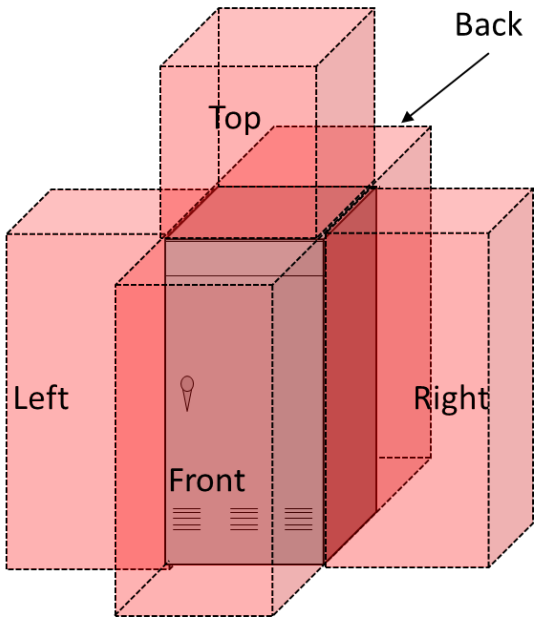

Figure 8-1
Medium-Voltage Switchgear ZOI Configuration for a Single Vertical Section

The key findings identified in the FDS ZOI report simplify the number of ZOIs to characterize the hazard [16]:

- The dominant parameter affecting the ZOIs in MV switchgear is the total arc energy.
    - A secondary parameter is the switchgear type (vertical lift style or horizontal draw-out style).
- The bus-bar material composition does not have a significant effect on the ZOI. The ZOIs are within the results uncertainty range for copper and aluminum bus-bar simulations for a given fault location, fault type, and fault energy. In other words, the ZOI ranges for aluminum and copper bus-bar materials overlap. The working group concluded that ZOIs are independent of the bus bar material (e.g., there was no need to develop separate copper and aluminum ZOIs).
- The ZOI results are sensitive to the distance between the target and the arc location and to the number of enclosure boundaries (including internal barriers) between the arc and the target.

Based on these observations, the FDS simulation results are grouped and linked to screening and configuration specific ZOIs described in Sections 8.4 through 8.6. The simulation grouping is described in detailed in Appendix D of this report. A summary of the simulation grouping is as follows:

- The screening ZOIs for each panel face are determined through consideration of all FDS MV results. The UAT and SAT fault clearing times correspond to FDS simulations with different durations.
- The configuration specific ZOIs for Zone 1 and Zone 2 are determined through consideration of the fault location within the vertical sections (i.e., supply or load). For

supply circuit breaker vertical switchgear sections, FDS simulations corresponding to the primary cable compartment in the supply configuration, the main bus bar, and the breaker stabs are used. For load vertical sections, FDS simulations corresponding to the primary cable compartment in the load configuration, the main bus bar, and the breaker stabs are used. The UAT and SAT fault clearing times correspond to FDS simulations with different durations.

- ZOIs with the supply breaker limited to 2 to 4 seconds are determined through consideration of all FDS simulations corresponding to the primary cable compartment in the load configuration, the main bus bar, and the circuit breaker connection stabs with a constant-current duration of 4 seconds for Zone 1 supply circuit breaker section and 2 seconds for Zone 2.
- The ZOIs for the vertical lift circuit breaker refinement are determined using the same process for the configuration specific ZOIs, except with the horizontal draw-out style FDS results removed.

The overall grouping of FDS simulations associated with the screening ZOIs, Zone 1, and Zone 2 configuration specific ZOIs are provided in Appendix D.

The screening and configuration specific ZOIs are determined by the WG using the FDS simulation results for the applicable group. The general process involved a review of predicted ZOIs and the selection of a representative value within this group in units of feet. This value was then rounded up, in increments of 0.5 ft. Appendix D provides a more detailed description of this process and provides several examples for illustration.

8.4 Screening ZOIs for Medium Voltage Switchgear

When practical (where detailed analysis is not required), screening ZOIs can be applied. From the EPRI aluminum HEAF survey results [44], the FCTs of the auxiliary power transformer vary among the industry. The longer it takes to clear the fault, the more energetic the HEAF hazard. The PRA method accounts for this by binning the range of FCTs and developing different ZOIs dependent on the energy level. The analyst should determine the limiting FCT for each feed to the switchgear (normal supply, alternative supply). The analysis of the alternate supply is necessary to account for the potential for a HEAF during a switching of power supplies.

The screening ZOIs for MV switchgear are shown in Table 8-2. The screening ZOI is bounded on the lower end by the 4 second supply breaker limited fault (e.g., SAT FCTs less than 4 seconds are bound by the 4 second supply breaker limited fault).

The analyst should reference the FCT for the MV switchgear fed by the normal and secondary supplies. Once these FCTs are mapped to each MV switchgear, the analyst should use Table 8-2 and select the larger ZOI (bounding) between the normal and secondary supplies. In addition to the energetic screenings ZOIs, postulate a post-HEAF ensuing fire.

Table 8-2
Energetic Screening ZOIs for MV Switchgear (Zone 1 and Zone 2)

SAT fault clearing time	UAT fault clearing time into generator fed fault	15 MJ/m^2 (feet)	30 MJ/m^2 (feet)
SAT (0 to 4.00 seconds)	UAT (0 to 0.50 seconds)	3	2
SAT (4.01+ seconds)	UAT (0.51 to 2.00 seconds)	3.5	2.5
	UAT (2.01 to 3.00 seconds)	4	3
	UAT (3.01+ seconds)	4.5	3.5

For feeds on the UAT, the screening ZOI is bounded by a generator fed fault outside the zone of differential protection with a FCT of 3 seconds or greater. This equates to 4.5 feet for the 15 MJ/m^2 fragility and 3.5 feet for the 30 MJ/m^2 fragility.

To apply the screening value, the distances in Table 8-2 are taken from the edge of the switchgear bank (shown in Figure 8-3). The bounding ZOI is applied in both the horizontal and vertical directions of the switchgear bank (shown in Figure 8-2 and Figure 8-3) The screening level ZOI does not require the use of an event tree or split fractions.

As an example, the Zone 1 switchgear is normally powered by the UAT (connected to the main generator), and the secondary supply is powered by the SAT (offsite power). For a hypothetical plant, assume that the UAT FCT is 2.2 seconds, and the SAT FCT is 3.4 seconds. For this Zone 1 switchgear, the analyst would select the maximum ZOI between row *UAT (2.01 to 3.00 seconds)* and row *SAT (0 to 4.00 seconds)* from Table 8-2. Assuming thermoset cables (30 MJ/m^2 threshold), the ZOI for the UAT is 3 feet and the SAT is 2 feet, respectively. The bounding ZOI is the largest ZOI, in this case 3 feet (bounded by the UAT).

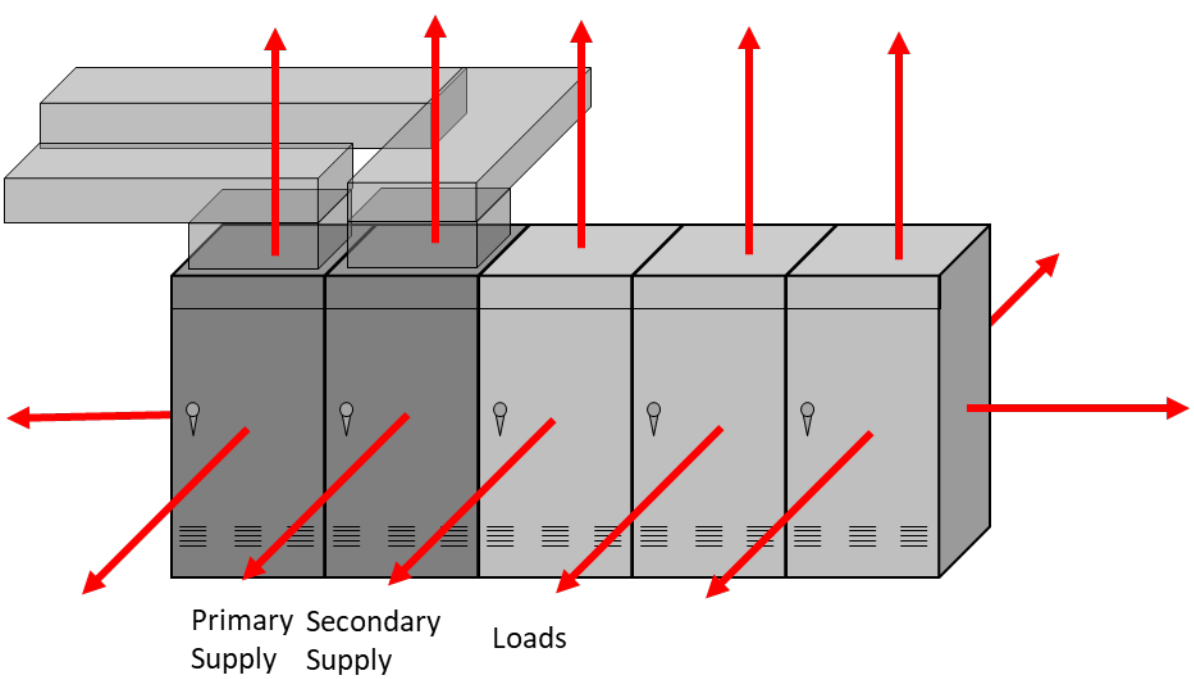

Figure 8-2
Application of MV Switchgear Screening ZOI

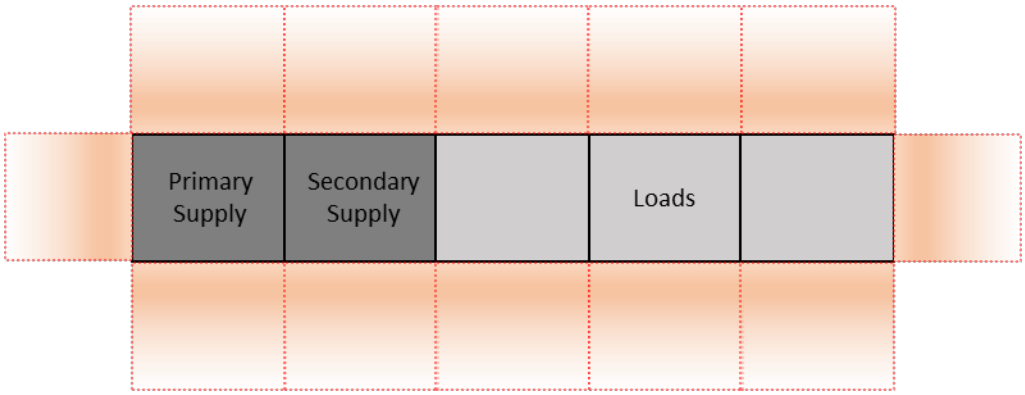

Figure 8-3
Overhead View of MV Switchgear Screening ZOI

8.5 Zone 1 Configuration Specific ZOIs

The screening ZOIs are intended to be bounding (as they are developed based on the maximum hazard dimensions and applied to the entire bank of switchgear). When more detail is necessary, the analyst can consider the fault location and likelihood to refine the results.

Zone 1 is the medium voltage switchgear fed directly from either the generator (via the UAT) or offsite power (via the SAT). When fed by the UAT, if the supply circuit breaker fails to open (or is the fault initiation point), Zone 1 supply is susceptible to a generator fed fault.

The configuration specific ZOIs and split fractions are intended for use when the screening value does not provide the level of detail necessary for realistic quantification. The configuration specific ZOIs postulate HEAFs based on the likelihood within the switchgear (split fractions), power source, fault clearing time, and provide ZOI dimensions for left/right, front, back, and top (vertical). For Zone 1, the analyst should consider the following four scenarios in conjunction with Figure 8-4 and either Table 8-3 (15 MJ/m^2 fragility) or Table 8-4 (30 MJ/m^2 fragility):

- Normal supply: Identify the normal source of power feeding the switchgear (either the UAT or SAT). This vertical section has a split fraction of 0.57. The energetic ZOI is applied around the normal supply vertical section.
    - If fed from the UAT, the “UAT – generator fed” ZOI should be used. If a generator circuit breaker (GCB) is installed, a GCB can be credited to reduce the frequency in a generator fed fault for this end state as it is within the zone of differential protection. A 3.5E-05 modifier can be used (see Section 5.3.1 for more details).
    - If fed from the SAT, the analyst should determine the backup FCT of the SAT and select the ZOI based on the time regimes (0-2 seconds, 2.01 – 3 seconds, 3.01-4 seconds, or 4+ seconds).
- Secondary supply: Identify the secondary source of power feeding the switchgear (either the UAT or SAT). This vertical section has a split fraction of 0.28. The energetic ZOI is applied around the secondary supply vertical section.
    - If fed from the UAT, the “UAT – generator fed” ZOI should be used. If a generator circuit breaker (GCB) is installed, a GCB can be credited to reduce the frequency in a generator fed fault for this end state as it is within the zone of differential protection. A 3.5E-05 modifier can be used (see Section 5.3.1 for more details).

- If fed from the SAT, the analyst should determine the backup FCT of the SAT and select the ZOI based on the time regimes (0-2 seconds, 2.01 – 3 seconds, 3.01-4 seconds, or 4+ seconds).

- Loads (includes fault in the main bus bar and loads) fed by the normal supply. This location of the switchgear is also inclusive of load circuit breaker cubicles, empty cubicles, etc. The loads are analyzed considering two different outcomes as explained in the bullets:
  - Fault in the load breaker or main bus bar and fed via a stuck normal supply breaker. Since the fault is not cleared by the Zone 1 bus supply circuit breaker, the fault is fed by the normal auxiliary power transformer.
    - End state probability = (0.15)*(0.09) = 0.01
    - For selecting an end state the analyst should assume the normal supply is feeding the fault. There is no need to analyze the secondary supply in determining the FCT for this branch.
      - If fed from the UAT, this fault point is outside the zone of the UAT differential protection (87). The next level upstream protection, typically the UAT time overcurrent relay protection (51 or 51G, 51N) is called upon to detect the fault. The analyst should follow the steps in Section 6.4 to determine the time overcurrent (51) relay protection for the UAT and select the ZOI based on the time regimes (0–0.5 seconds, 0.51–2 seconds, 2.01 – 3 seconds, 3+ seconds).
    - The energetic ZOI is applied around the load vertical sections (not applied around the supply vertical sections).
  - Faults in the load breaker or main bus bar and interrupted by the Zone 1 bus supply circuit breaker. Based on an aggregate review of several NPPs, this time can extend up to 4 seconds. The analyst can use the end state ZOIs associated with SBL4 (see basis in Section 6.3.2).
    - End state probability = (0.15)*(0.91) = 0.14
    - If more refinement is necessary, the analyst can determine the actual Zone 1 bus supply circuit breaker opening time based on the speed of the protection. This can be determined using the steps in Section 6.4.2. If the FCT is 3 seconds or faster the following end states can be used:
      - For FCT between 2.01 to 3 seconds – use SBL3 end state.
      - For FCTs of 2 seconds or faster – use SBL2 end state.
    - The energetic ZOI is applied around the load vertical sections (not applied around the supply vertical sections).

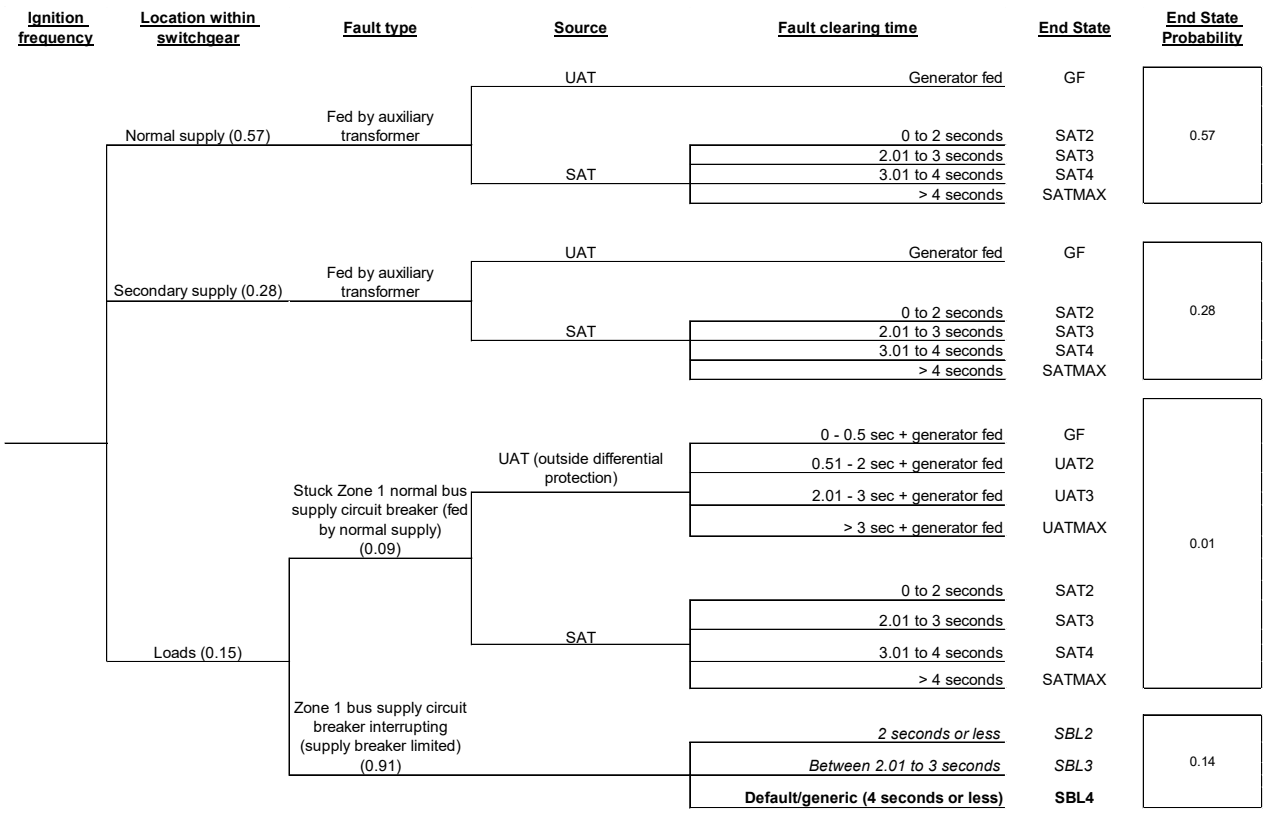

Figure 8-4
Zone 1 HEAF Event Tree

The ZOIs and split fractions for 15 MJ/m^2 and 30 MJ/m^2 are presented in Table 8-3 and Table 8-4, respectively. The first set of numbers "default ZOI dimensions" are applicable to both horizontal and vertical circuit breakers (the horizontal circuit breakers results bound the vertical breaker results). If the switchgear contains vertical-lift breakers the right hand set of numbers are applicable – "ZOI dimensions for vertical-lift style circuit breakers". The vertical-lift circuit breakers have smaller ZOIs in the side (left/right) and back directions[10]. For horizontal drawout circuit breakers (both supply and load) and vertical-lift circuit breakers a split fraction can be applied. A 20% split fraction uses the back dimension specified in either Table 8-3 or Table 8-4. The remaining 80% split fraction should be analyzed as having no back ZOI.

[10] Horizontal draw-out style circuit breakers have the circuit breaker stabs at the back of the circuit breaker truck, for faults occurring at these locations, the mass of the circuit breaker directs the HEAF energy to breach the side enclosures of the vertical section. Whereas vertical-lift circuit breakers allow the HEAF energy to dissipate towards the front of the switchgear. The physical construction of vertical-lift style switchgear utilizes primary cable compartment bus bars that run in horizontally from the center of the switchgear to the rear. Faults occurring in this location in supply breaker vertical sections will have the fault occurring more towards the center of the vertical section, thus not breaching the rear of the switchgear enclosure.

Table 8-3
Configuration Specific ZOIs for Zone 1 – 15 MJ/m^2 Target Fragility

Zone 1 - 15 MJ/m^2 target fragility				Default ZOI dimensions (inclusive of horizontal and vertical-lift circuit breakers)				ZOI dimensions for vertical-lift style circuit breakers			
Fault location	Power source and duration	Arc Energy (MJ)	End State	Left/ Right (feet)	Front (feet)	Back (feet)	Top (feet)	Left/Right (feet)	Front (feet)	Back (feet)	Top (feet)
Normal supply (0.57) and Secondary supply (0.28)	UAT - Generator fed	132	GF-15	2.5	2	3*	1.5	2	2	None	1.5
	SAT - 0 to 2.00 s	68	SAT2-15	1.5	1	2*	1	0.5	1	None	1
	SAT - 2.01 to 3.00 s	101	SAT3-15	2	1.5	2.5*	1.5	1.5	1.5	None	1.5
	SAT - 3.01 to 4.00 s	135	SAT4-15	2.5	2	3*	1.5	2	2	None	1.5
	SAT ≥ 4.01 s	169	SATMAX-15	3	2.5	3.5*	2	2.5	2.5	None	2
Loads: Supply breaker limited (.14)	4 seconds or less (generic)	135	SBL4-15	2.5	2	3*	1.5	2	2	None	1.5
	2 seconds or less	68	SBL2-15	1.5	1	2*	1	0.5	1	None	1
	2.01 to 3 seconds	101	SBL3-15	2	1.5	2.5*	1.5	1.5	1.5	None	1.5
Loads (0.01)	UAT - 0 to 0.5 s + GF	132	GF-15	2.5	2	3*	1.5	2	2	3**	1.5
	UAT - 0.51 to 2 s + GF	199	UAT2-15	3	2.5	3.5*	2.5	2.5	2.5	3.5**	2.5
	UAT - 2.01 to 3 s + GF	233	UAT3-15	3.5	3	4*	3	3	3	4**	3
	UAT - ≥ 3 s + GF	300	UATMAX-15	4	3.5	4.5*	3.5	3.5	3.5	4.5**	3.5
	SAT - 0 to 2.00 s	68	SAT2-15	1.5	1	2*	1	0.5	1	2**	1
	SAT - 2.01 to 3.00 s	101	SAT3-15	2	1.5	2.5*	1.5	1.5	1.5	2.5**	1.5
	SAT - 3.01 to 4.00 s	135	SAT4-15	2.5	2	3*	1.5	2	2	3**	1.5
	SAT ≥ 4.01 s	169	SATMAX-15	3	2.5	3.5*	2	2.5	2.5	3.5**	2

*For horizontal draw out style supply circuit breaker cubicles and load circuit breaker cubicles this fraction can be applied to the back direction: 20% to the ZOI shown in the table, 80% no back ZOI (left/right/front/top dimensions the same).

**For the vertical lift circuit breaker load cubicles, the following fraction can be applied to the back direction: 20% to the ZOI shown in the table, 80% no back ZOI (left/right/front/top dimensions the same).

Table 8-4
Configuration Specific ZOIs for Zone 1 – 30 MJ/m^2 Target Fragility

Zone 1 - 30 MJ/m^2 target fragility				Default ZOI dimensions (inclusive of horizontal and vertical-lift circuit breakers)				ZOI dimensions for vertical-lift style circuit breakers			
Fault location	Power source and duration	Arc Energy (MJ)	End State	Left/Right (feet)	Front (feet)	Back (feet)	Top (feet)	Left/Right (feet)	Front (feet)	Back (feet)	Top (feet)
Normal supply (0.57) and Secondary supply (0.28)	UAT - Generator fed	132	GF-30	1.5	1	2*	1	1	1	None	1
	SAT - 0 to 2.00 s	68	SAT2-30	0.5	None	1*	None	None	None	None	None
	SAT - 2.01 to 3.00 s	101	SAT3-30	1	0.5	1.5*	0.5	0.5	0.5	None	0.5
	SAT - 3.01 to 4.00 s	135	SAT4-30	1.5	1	2*	1	1	1	None	1
	SAT ≥ 4.01 s	169	SATMAX-30	2	2	2.5*	1	1.5	2	None	1
Loads: Supply breaker limited (.14)	4 seconds or less (generic)	135	SBL4-30	1.5	1	2*	1	1	1	None	1
	2 seconds or less	68	SBL2-30	0.5	None	1*	None	None	None	None	None
	2.01 to 3 seconds	101	SBL3-30	1	0.5	1.5*	0.5	0.5	0.5	None	0.5
Loads (0.01)	UAT - 0 to 0.5 s + GF	132	GF-30	1.5	1	2*	1	1	1	2**	1
	UAT - 0.51 to 2 s + GF	199	UAT2-30	2	1.5	2.5*	1.5	1.5	1.5	2.5**	1.5
	UAT - 2.01 to 3 s + GF	233	UAT3-30	2.5	2	3*	2	2	2	3**	2
	UAT - ≥ 3 s + GF	300	UATMAX-30	3	2.5	3.5*	2.5	2.5	2.5	3.5**	2.5
	SAT - 0 to 2.00 s	68	SAT2-30	0.5	None	1*	None	None	None	1**	None
	SAT - 2.01 to 3.00 s	101	SAT3-30	1	0.5	1.5*	0.5	0.5	0.5	1.5**	0.5
	SAT - 3.01 to 4.00 s	135	SAT4-30	1.5	1	2*	1	1	1	2**	1
	SAT ≥ 4.01 s	169	SATMAX-30	2	2	2.5*	1	1.5	2	2.5**	1

*For horizontal draw out style supply circuit breaker cubicles and load circuit breaker cubicles this fraction can be applied to the back direction: 20% to the ZOI shown in the table, 80% no back ZOI (left/right/front/top dimensions the same).

The distances in Table 8-3 and Table 8-4 are applied to their respective faces as shown in Figure 8-5 and Figure 8-6. The drawings have the supply sections adjacent to each other; however, other configurations where the primary/normal supply and secondary supply are on opposite ends, etc. may exist and should be modeled where they appear in the bank. These configuration specific ZOIs are intended to be applied in 4 sub-scenarios per the event tree in Figure 8-4.

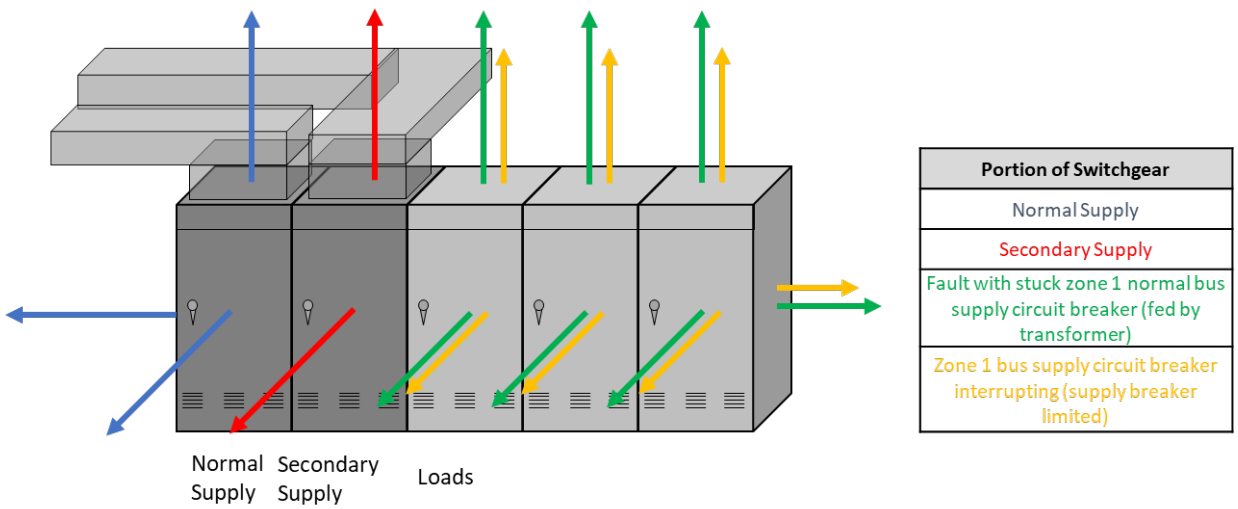

Figure 8-5
MV Switchgear Configuration Specific ZOIs

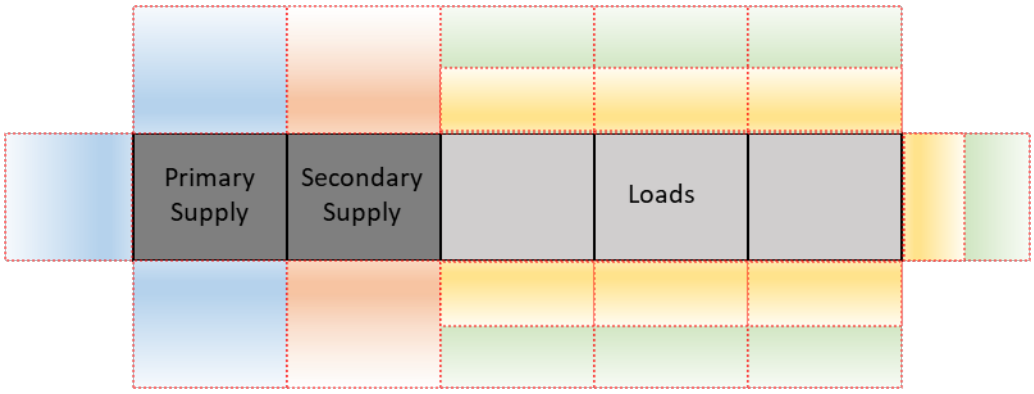

Figure 8-6
Overhead View of MV Switchgear Specific ZOIs

8.6 Zone 2 Configuration Specific ZOIs

Faults in Zone 2 occur in the medium voltage switchgear bus fed by an intermediary switchgear downstream of the UAT or SAT. The Zone 2 switchgear is less likely to experience a fault fed by a generator or offsite power as at least two circuit breakers (Zone 1 supply circuit breaker and Zone 2 supply circuit breaker) must fail or be involved in the collateral damage of the fault (e.g., fault location is the breaker stabs).

The screenings ZOIs in Table 8-2 can be used to model the Zone 2 switchgear. If more refinement is necessary, the ZOIs in Table 8-5 and Table 8-6 should be used. To pair these ZOIs with scenarios, two level of refinement are available for Zone 2 switchgear:

- Refinement level 1. The ignition frequency is split into two scenarios. Similar to the screening ZOIs, the ZOI is applied around the entire bank of switchgear. In refinement level 1 a bounding fault fed by an auxiliary transformer and a supply breaker limited fault (typically of smaller ZOI dimensions) are postulated. The supply breaker fault represents 94% of the frequency and can help reduce conservatism from the screening ZOIs. The two scenarios include:
    - Fault in the load vertical sections (either in the load breaker or main bus bar) with the bus supply breaker interrupting, a “supply breaker limited fault”
    - Fault in the normal or secondary supply with an upstream breaker failure (fed by auxiliary power transformer)
- Refinement level 2 provides the most detailed approach. The normal supply, secondary supply, and load vertical sections can be analyzed individually as detail allows. Refinement 2 can be applied by analyzing each vertical section individually (or grouped). This refinement level provides flexibility by allowing the analyst to group or individually analyze vertical sections based on the differences in targets between vertical sections.

8.6.1 Zone 2: Refinement Level 1

In refinement level 1, two scenarios are modeled in Zone 2 as shown in the event tree in Figure 8-7. The two scenarios include a supply breaker limited fault and a fault fed by the normal supply or secondary supply (the analyst should use the limiting supply configuration).

- Supply breaker limited fault. This 0.95 split fraction represents a fault in the Zone 2 bus supply circuit breaker that is interrupted by the Zone 1 supply circuit breaker (there are two potential supply breaker limited scenarios in Zone 2 and this is the bounding end state). In Zone 2, a supply breaker limited fault is possible at all three locations of the switchgear (normal supply, secondary supply, and the load portions).

  As a default, use the 4 second supply breaker limited fault (end state SBL4) to bound the modeling. If more refinement is necessary, the analyst can calculate the Zone 1 bus supply breaker fault clearing time as described in Section 6.4.2. If the FCT is 3 seconds or less or the Zone 1 switchgear has a load circuit breaker with overcurrent protection, additional refinements in the sub bullets can be applied:

    - If the Zone 1 bus supply breaker FCT is 3 seconds or less, the analyst can use the ZOIs for SBL2 (0-2 seconds) or SBL3 (2.01-3 seconds) based on the actual Zone 1 FCT as appropriate. This ZOI is applied around the entire switchgear as shown in Figure 8-8.

- If the Zone 1 switchgear has a load circuit breaker with overcurrent protection (not used as a maintenance switch) to the Zone 2 bus and can interrupt in 3 seconds or less, use the ZOIs for SBL2 (0-2 seconds), or SBL3 (2.01-3 seconds). This ZOI is applied around the entire switchgear as shown in Figure 8-8.

- Fault in bus supply circuit breaker cubicles: Identify the normal and secondary sources of power (SAT and/or UAT) feeding the switchgear and their respective FCTs. Select the bounding ZOI based on the available sources of power (e.g., the screening ZOI selected from Table 8-2). In refinement level 1, this bounding ZOI is drawn around the entire switchgear. The 0.05 split fraction is applied around the entire switchgear bank, which conservatively represents circuit breaker/protection failures resulting in a HEAF fed directly from an auxiliary power transformer.

This event tree for refinement level 1 for Zone 2 is shown in Figure 8-7. The corresponding ZOIs for Zone 2 are shown in Table 8-5 and Table 8-6 for 15 MJ/m^2 and 30 MJ/m^2 fragilities, respectively. The first set of numbers are applicable to both horizontal draw-out and vertical-lift circuit breakers (the horizontal draw-out circuit breaker ZOI results bound the vertical-lift circuit breaker results). If the switchgear contains vertical-lift circuit breakers the right hand set of numbers are applicable. The vertical-lift circuit breakers have smaller ZOIs in the side (left/right) and back directions[11]. For horizontal draw-out circuit breakers (both supply and load) and vertical-lift circuit breakers a split fraction can be applied. A 20% split fraction uses the back dimension specified in either Table 8-5 or Table 8-6. The remaining 80% split fraction should be analyzed as having no back ZOI.

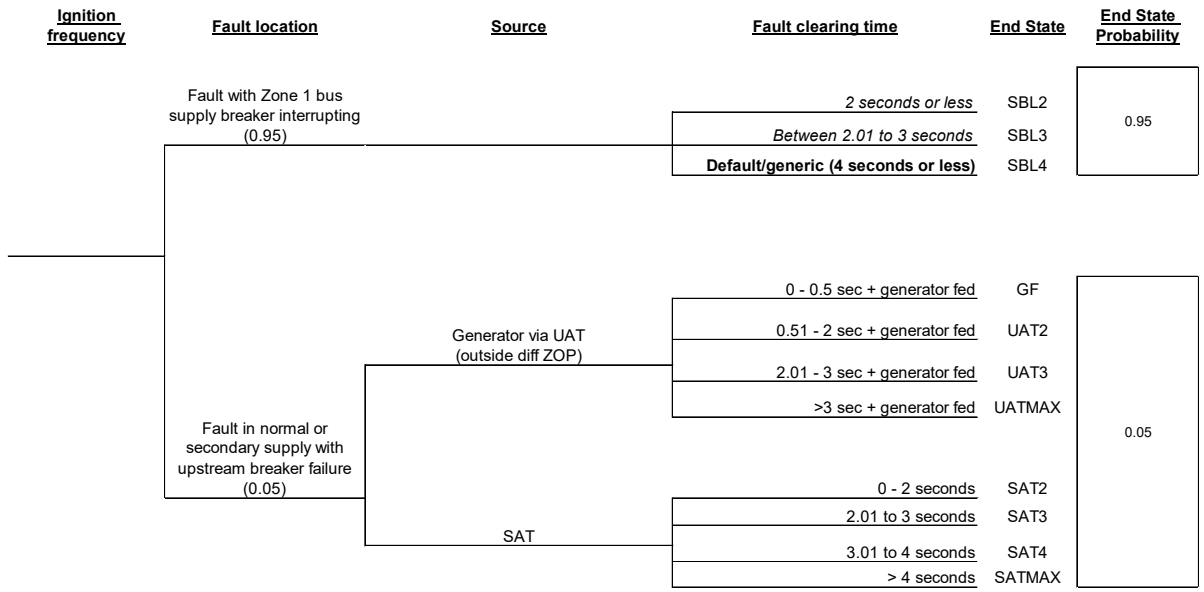

Figure 8-7
Zone 2: Refinement Level 1

[11] Horizontal draw-out style circuit breakers have the circuit breaker connection stabs at the back of the circuit breaker truck. For faults occurring at these locations, the mass of the circuit breaker directs the HEAF energy to breach the side enclosures of the vertical section. Whereas vertical-lift breakers allow the HEAF energy to dissipate towards the front of the switchgear. The physical construction of vertical-lift style switchgear utilizes primary cable compartment bus bars that run in horizontally from the center of the switchgear to the rear. Faults occurring in this location in supply circuit breaker vertical sections will have the fault occurring more towards the center of the vertical section, thus not breaching the rear of the switchgear enclosure.

The ZOI for the two scenarios are applied to the entire bank of switchgear as shown in Figure 8-8.

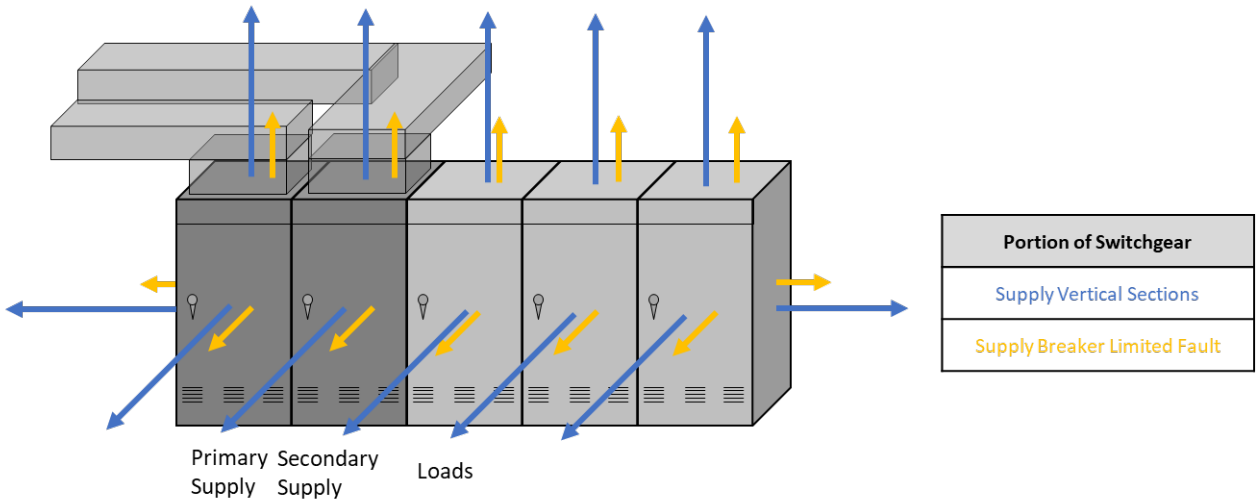

Figure 8-8
Zone 2 Refinement Level 1 ZOIs

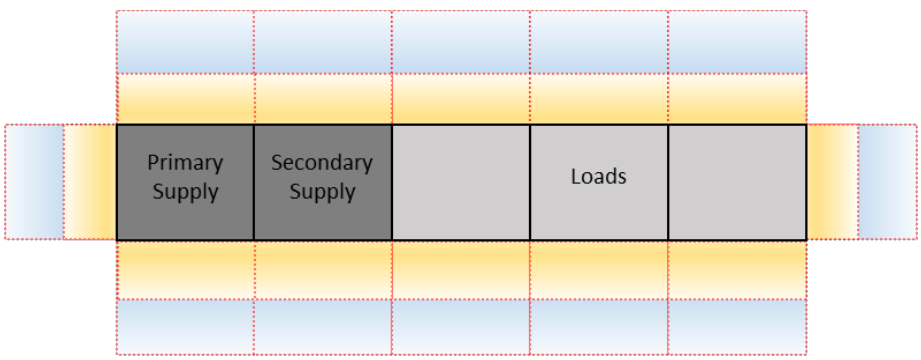

Figure 8-9
Overhead View of Refinement Level 1

8.6.2 Zone 2: Refinement Level 2

Refinement level 2 expands the treatment of faults by discretely modeling the normal supply, secondary supply, load portions of the Zone 2 switchgear. Similar to refinement level 1, the event trees are intended to be paired with the configuration specific ZOIs to postulate HEAFs based on the likelihood within the switchgear (split fractions), power source, fault clearing time, and provide ZOI dimensions for left/right, front, back, and top (vertical). For Zone 2, the analyst should consider HEAFs at three fault locations (see the event tree in Figure 8-10):

- Normal supply: Identify the normal source of power feeding the Zone 2 switchgear. This vertical section has a total split fraction of 0.54 (final split fraction in the sub bullets below). Two types of HEAFs are postulated; a HEAF fed by the generator or switchyard, and a supply breaker limited fault. For both HEAF types, the ZOI is applied around the normal supply vertical section.
    - For the generator / switchyard HEAF, end state probability 0.03, the ZOI is dependent on the power source:

        - If fed from the UAT, this fault point is outside the zone of the UAT differential protection (87). The next level upstream protection, typically the UAT time overcurrent relay protection (51 or 51G, 51N) is called upon to detect the fault. The analyst should follow the steps in Section 6.4 to determine the time overcurrent relay protection for the UAT and select the ZOI based on the time regimes (0-0.5 seconds, 0.51-2 seconds, 2.01 – 3 seconds, 3+ seconds).
        - If fed from the SAT, the analyst should determine the fault clearing time (per Section 6.4) of the SAT and select the ZOI based on the time regimes (0-2 seconds, 2.01 – 3 seconds, 3.01-4 seconds, 4+ seconds).
    - Supply breaker limited fault (Zone 1), end state probability 0.51. This represents a fault in the Zone 2 supply section that is interrupted by the Zone 1 supply circuit breaker. Based on an aggregate review of several NPPs, this time is around 4 seconds. As a default, use the 4 second supply breaker limited fault (end state SBL4) to bound the modeling. If more refinement is necessary, the analyst can calculate the Zone 1 bus supply breaker fault clearing time as described in Section 6.4.2. If the FCT is 3 seconds or less or the Zone 1 switchgear has a load circuit breaker with overcurrent protection, additional refinements in the sub bullets can be applied:
        - If the Zone 1 bus supply breaker FCT is 3 seconds or less, the analyst can use the ZOIs for SBL2 (0-2 seconds) or SBL3 (2.01-3 seconds) based on the actual Zone 1 FCT as appropriate. This ZOI is applied around the supply section (shown in navy blue arrows) of the switchgear as shown in Figure 8-11.
        - If the Zone 1 switchgear has a load circuit breaker with overcurrent protection (not used as a maintenance switch) to the Zone 2 bus and can interrupt in 3 seconds or less, use the ZOIs for SBL2 (0-2 seconds), or SBL3 (2.01-3 seconds). This ZOI is applied around the supply section (shown in navy blue arrows) of the switchgear as shown in Figure 8-11.
- Secondary supply: Identify the secondary source of power feeding the Zone 2 switchgear. This vertical section has a split fraction of 0.32 (final split fractions outlined in the sub bullets below). Two types of HEAFs are postulated; a HEAF fed by the generator or switchyard, and a supply breaker limited fault. For both HEAF types, the ZOI is applied around the secondary supply vertical section.
    - For the generator / switchyard HEAF, end state probability 0.02, the ZOI is dependent on the power source:
        - If fed from the UAT, this fault point is outside the zone of the UAT differential protection (87). The next level upstream protection, typically the UAT time overcurrent relay protection (51 or 51G, 51N) is called upon to detect the fault. The analyst should follow the steps in Section 6.4 to determine the time overcurrent relay protection for the UAT and select the ZOI based on the time regimes (0-.5 seconds, 0.51-2 seconds, 2.01 – 3 seconds, 3+ seconds).
        - If fed from the SAT, the analyst should determine the fault clearing time (per Section 6.4) of the SAT and select the ZOI based on the time regimes (0-2 seconds, 2.01 – 3 seconds, 3.01-4 seconds, 4+ seconds).
    - Supply breaker limited fault (Zone 1), end state probability 0.30. This represents a fault in the Zone 2 supply section that is interrupted by the Zone 1 supply breaker.

Based on an aggregate review of several NPPs, this time is around 4 seconds. As a default, use the 4 second supply breaker limited fault (end state SBL4) to bound the modeling. If more refinement is necessary, the analyst can calculate the Zone 1 bus supply breaker fault clearing time as described in Section 6.4.2. If the FCT is 3 seconds or less or the Zone 1 switchgear has a load circuit breaker with overcurrent protection, additional refinements in the sub bullets can be applied:

- If the Zone 1 bus supply breaker FCT is 3 seconds or less, the analyst can use the ZOIs for SBL2 (0-2 seconds) or SBL3 (2.01-3 seconds) based on the actual Zone 1 FCT as appropriate. This ZOI is applied around the supply section (shown in blue arrows) of the switchgear in Figure 8-11.
- If the Zone 1 switchgear has a load circuit breaker with overcurrent protection (not used as a maintenance switch) to the Zone 2 bus and can interrupt in 3 seconds or less, use the ZOIs for SBL2 (0-2 seconds), or SBL3 (2.01-3 seconds). This ZOI is applied around the supply section (shown in blue arrows) of the switchgear in Figure 8-11.

- Fault in the loads fed by the normal supply. This portion of the switchgear frequency, 0.14, considers HEAFs in the load sections (e.g., load circuit breaker cubicles, empty cubicles, etc.). The ZOI is applied around the load portions of the switchgear (or however discrete the modeling choice). For this, the analyst should pick the normal supply as feeding the fault. There is no need analyze the secondary supply in determining the FCT.
  - For the generator / switchyard HEAF, end state probability 0.01, the ZOI is dependent on the power source:
    - If normally fed from the UAT, this fault point is outside the zone of the UAT differential protection (87). The next level upstream protection, typically the UAT time overcurrent relay protection (51 or 51G, 51N) is called upon to detect the fault. The analyst should follow the steps in Section 6.4 to determine the time overcurrent relay protection for the UAT and select the ZOI based on the time regimes (0-.5 seconds, 0.51-2 seconds, 2.01 – 3 seconds, 3+ seconds). The ZOI is applied around the load section(s) (shown in green arrows) of the switchgear as shown in Figure 8-11.
    - If normally fed from the SAT, the analyst should determine the fault clearing time (per Section 6.4) of the SAT and select the ZOI based on the time regimes (0-2 seconds, 2.01 – 3 seconds, 3.01-4 seconds, 4+ seconds). The ZOI is applied around the load section(s) (shown in green arrows) of the switchgear as shown in Figure 8-11.
  - Supply breaker limited fault (Zone 2). The end state probability (0.13) represents a fault in the load or main bus bars that is interrupted by the Zone 2 supply breaker. Based on an aggregate review of several NPPs, for Zone 2 this time is around 2 seconds. The analyst should use the ZOI associated with the supply breaker limited fault for 2 seconds (SBL2). The ZOI is around the load portions of the switchgear as shown in the yellow arrows in Figure 8-11.

The event tree for Zone 2 Refinement Level 2 is shown in Figure 8-10. The corresponding ZOIs for Zone 2 are shown in Table 8-5 and Table 8-6 for 15 MJ/m^2 and 30 MJ/m^2 fragilities, respectively. The first set of numbers are applicable to both horizontal draw-out and vertical-lift circuit breakers (the horizontal draw-out circuit breaker ZOI results bound the vertical-lift circuit breaker results. If the switchgear contains vertical-lift circuit breakers the right hand set of

numbers are applicable. The vertical-lift circuit breakers have smaller ZOIs in the side (left/right) and back directions[12]. For horizontal draw-out circuit breakers (both supply and load) and vertical-lift circuit breakers, a split fraction can be applied. A 20% split fraction uses the back dimension specified in either Table 8-5 or Table 8-6. The remaining 80% split fraction should be analyzed as having no back ZOI.

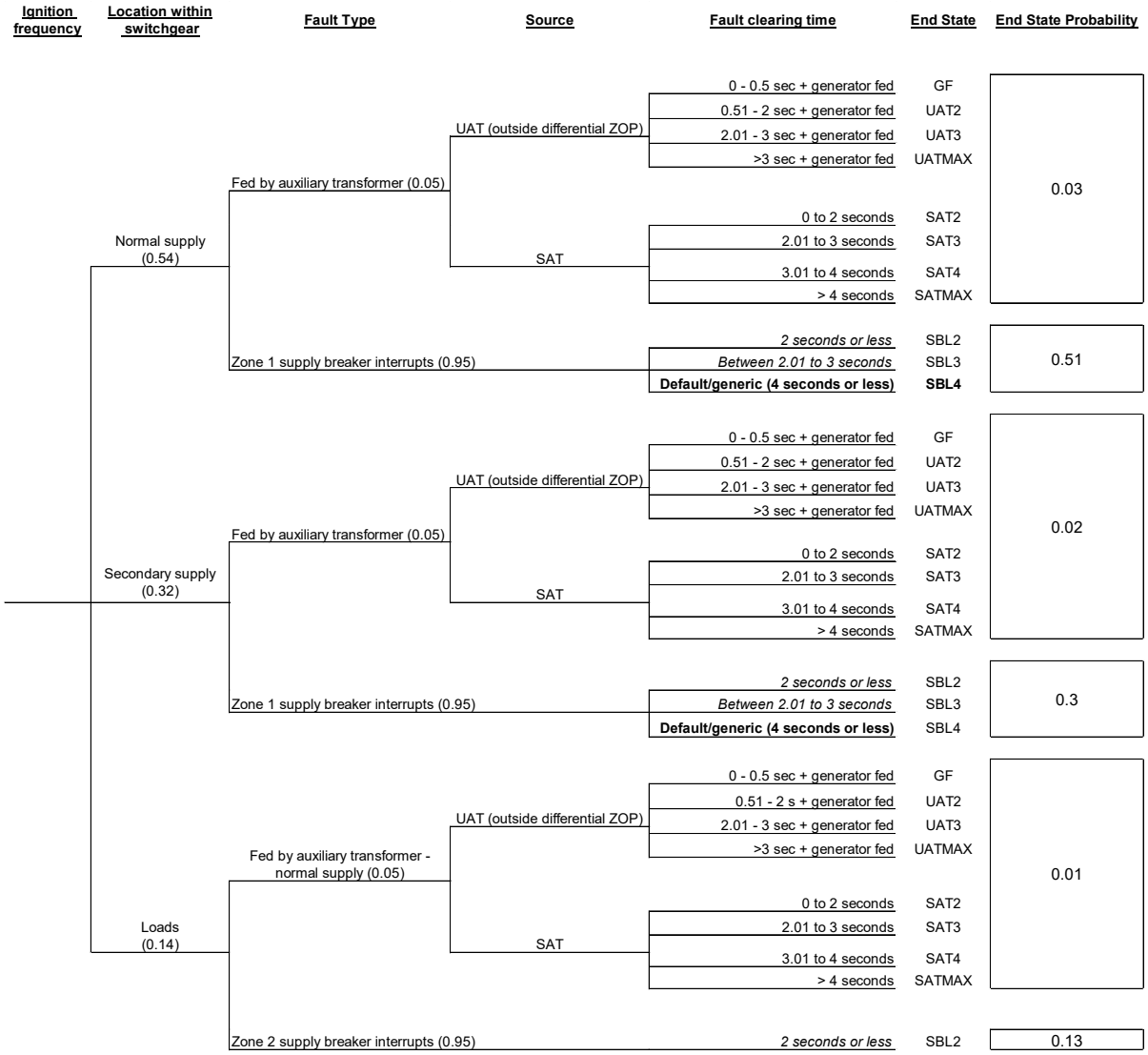

Figure 8-10
Zone 2: Refinement Level 2

[12] Horizontal draw-out style circuit breakers have the circuit breaker connection stabs at the back of the circuit breaker truck. For faults occurring at these locations, the mass of the circuit breaker directs the HEAF energy to breach the side enclosures of the vertical section. Whereas vertical-lift breakers allow the HEAF energy to dissipate towards the front of the switchgear. The physical construction of vertical-lift style switchgear utilizes primary cable compartment bus bars that run horizontally from the center of the switchgear to the rear. Faults occurring in this location in supply circuit breaker vertical sections will have the fault occurring more towards the center of the vertical section, thus not breaching the rear of the cabinet.

Table 8-5
Configuration Specific ZOIs – Zone 2 – 15 MJ/m^2 Target Fragility

Zone 2 - 15 MJ/m^2 target fragility				Default ZOI dimensions (inclusive of horizontal and vertical-lift circuit breakers)				ZOI dimensions for vertical-lift style circuit breakers			
Fault location	Power source and duration	Arc Energy (MJ)	End State	Left/Right (feet)	Front (feet)	Back (feet)	Top (feet)	Left/Right (feet)	Front (feet)	Back (feet)	Top (feet)
Refinement Level 1: Primary, Secondary, and Loads (0.05) **Refinement Level 2:** Normal supply: 0.03 Secondary supply: 0.02 Loads fed by normal feed: 0.01	UAT - 0 to 0.5 s + GF	132	GF-15	2.5	2	3*	1.5	2	2	3**	1.5
	UAT - 0.51 to 2 s + GF	199	UAT2-15	3	2.5	3.5*	2.5	2.5	2.5	3.5**	2.5
	UAT - 2.01 to 3 s + GF	233	UAT3-15	3.5	3	4*	3	3	3	4**	3
	UAT ≥ 3 s + GF	300	UATMAX-15	4	3.5	4.5*	3.5	3.5	3.5	4.5**	3.5
	SAT - 0 to 2.00 s	68	SAT2-15	1.5	1	2*	1	0.5	1	None	1
	SAT - 2.01 to 3.00 s	101	SAT3-15	2	1.5	2.5*	1.5	1.5	1.5	None	1.5
	SAT - 3.01 to 4.00 s	135	SAT4-15	2.5	2	3*	1.5	2	2	None	1.5
	SAT ≥ 4.01 s	169	SATMAX-15	3	2.5	3.5*	2	2.5	2.5	None	2
Refinement Level 1: Zone 1 supply breaker limited (.95)	4 seconds or less (generic)	135	SBL4-15	2.5	2	3*	1.5	2	2	None	1.5
Refinement Level 2: Zone 1 supply breaker Normal supply: 0.51 Secondary supply: 0.30	2 seconds or less	68	SBL2-15	1.5	1	2*	1	0.5	1	None	1
	2.01 to 3 seconds	101	SBL3-15	2	1.5	2.5*	1.5	1.5	1.5	None	1.5
Refinement Level 2: Zone 2 supply breaker interrupts: 0.13	2 seconds or less	68	SLB2-15	1.5	1	2*	1	0.5	1	None	1

*For horizontal draw out style supply cubicles and load cubicles this fraction can be applied to the back direction: 20% to the ZOI shown in the table, 80% no back ZOI (left/right/front/top dimensions the same).
**For the vertical lift breaker load cubicles, the following fraction can be applied to the back direction: 20% to the ZOI in the table, 80% no back ZOI (left/right/front/top dimensions the same).

8-21

Table 8-6
Configuration Specific ZOIs – Zone 2 – 30 MJ/m^2 Target Fragility

Zone 2 - 30 MJ/m^2 target fragility				Default ZOI dimensions (inclusive of horizontal and vertical-lift circuit breakers)				ZOI dimensions for vertical-lift style circuit breakers			
Fault location	Power source and duration	Arc Energy (MJ)	End State	Left/Right (feet)	Front (feet)	Back (feet)	Top (feet)	Left/Right (feet)	Front (feet)	Back (feet)	Top (feet)
Refinement Level 1: Primary, Secondary, and Loads (0.05) **Refinement Level 2:** Normal supply: 0.03 Secondary supply: 0.02 Loads fed by normal feed: 0.01	UAT - 0 to 0.5 s + GF	132	GF-30	1.5	1	2*	1	1	1	2**	1
	UAT - 0.51 to 2 s + GF	199	UAT2-30	2	1.5	2.5*	1.5	1.5	1.5	2.5*	1.5
	UAT - 2.01 to 3 s + GF	233	UAT3-30	2.5	2	3*	2	2	2	3**	2
	UAT $\geq$ 3 s + GF	300	UATMAX-30	3	2.5	3.5*	2.5	2.5	2.5	3.5**	2.5
	SAT - 0 to 2.00 s	68	SAT2-30	0.5	None	1*	None	None	None	None	None
	SAT - 2.01 to 3.00 s	101	SAT3-30	1	0.5	1.5*	0.5	0.5	0.5	None	0.5
	SAT - 3.01 to 4.00 s	135	SAT4-30	1.5	1	2*	1	1	1	None	1
	SAT $\geq$ 4.01+ s	169	SATMAX-30	2	2	2.5*	1	1.5	2	None	1
Refinement Level 1: Zone 1 supply breaker limited (.95) **Refinement Level 2:** Zone 1 supply breaker Normal supply: 0.51 Secondary supply: 0.30	4 seconds or less (generic)	135	SBL4-30	1.5	1	2*	1	1	1	None	1
	2 seconds or less	68	SBL2-30	0.5	None	1*	None	None	None	None	None
	2.01 to 3 seconds	101	SBL3-30	1	0.5	1.5*	0.5	0.5	0.5	None	0.5
Refinement Level 2: Zone 2 supply breaker interrupts: 0.13	2 seconds or less	68	SBL2-30	0.5	None	1*	None	None	None	None	None

*For horizontal draw out style supply circuit breaker cubicles and load circuit breaker cubicles this fraction can be applied to the back direction: 20% to the ZOI shown in the table, 80% no back ZOI (left/right/front/top dimensions the same).
**For the vertical lift circuit breaker load cubicles, the following fraction can be applied to the back direction: 20% to the ZOI in the table, 80% no back ZOI (left/right/front/top dimensions the same).

The distances in Table 8-5 and Table 8-6 are applied to their respective faces as shown in Figure 8-11 and Figure 8-12, depending on the refinement. Figures 8-11 and 8-12 show the supply sections adjacent to each other; but other configurations exist, such as supply sections on opposite ends of the switchgear bank, etc. The analyst should confirm the location of the supply cabinets and model the supply sections where they are located in the switchgear bank.

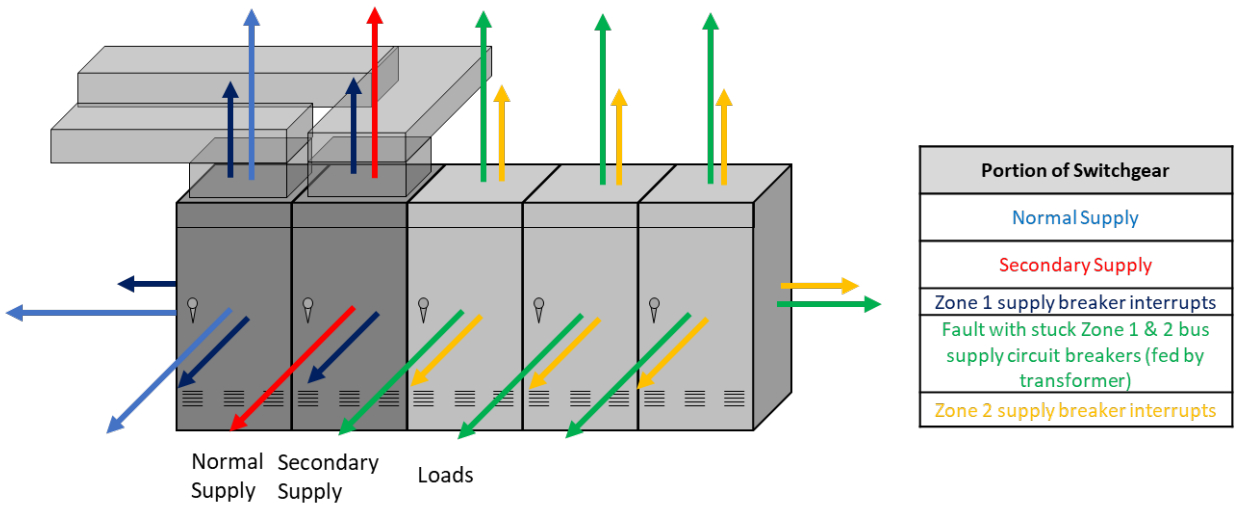

Figure 8-11
Refinement Level 2 ZOIs

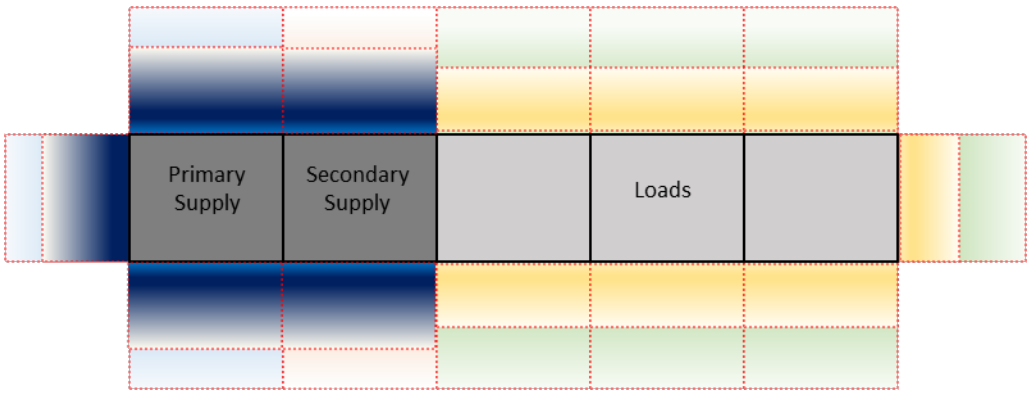

Figure 8-12
Overhead View of Refinement Level 2

9
ZONE OF INFLUENCE FOR BUS DUCTS

Faults in NSBDs are divided into two ignition source bins based on the higher likelihood of faults in the ductwork between the power transformer and the first switchgear. The analyst uses the frequency for Bin 16.1-1 and apportions the frequency between BDUAT and BDSAT. The remaining bus ducts (BD1, BD2, BDLV) use the frequency for Bin 16.1-2.

The ZOIs for bus ducts are dependent on the fault location, bus duct material (aluminum or steel), power source, and fault clearing time. For bus duct zones BDUAT, BDSAT, and BDLV there is one end state and corresponding ZOI. Bus duct zones BD1 and BD2 can experience a fault fed by the auxiliary power transformer or a supply breaker limited fault. If detailed modeling is required, the analyst can split the scenario frequency using the split fractions provided and model the scenario for the fault fed by the auxiliary power transformer and a supply breaker limited fault. For BD1 and BD2 the analyst can also use the limiting/bounding configuration (either directly fed by an auxiliary power transformer or supply breaker limited fault) as a screening.

9.1 Summary of FDS Cases and Insights for Bus Ducts

The working group developed FDS input files for a range of potential NSBD fault energies, power sources, fault durations, bus-bar compositions, bus duct housing compositions, and bus duct geometry [16]. These parameters are summarized in Table 9-1.

Table 9-1
FDS Simulation Parameter Ranges for Non-Segregated Bus Ducts

Parameter	Range considered or configuration
Bus duct geometry	• Straight segment • Vertical tee • Vertical elbow
Fault type and duration	• Constant-current fault (0 – 5 seconds) • Generator fed fault (15 seconds of decaying current) • Constant-current (0 – 5 seconds) with a generator-fed fault (15 seconds of decaying current)
Total fault energy	68 – 300 MJs
Bus-bar material composition	• Copper • Aluminum
Bus duct housing material composition	• Steel • Aluminum

The FDS input were evaluated using FDS, Version 6.7.6 with application specific updates as described in the FDS ZOI report [16]. Overall, a total of 58 unique FDS input files and simulations were developed for the NSBDs. The FDS simulation results are used to develop ZOI for targets with 15 MJ/m² and 30 MJ/m² fragilities around the duct enclosure. The ZOIs for these 57 simulations (one failed with a numerical instability) are provided in Appendix D of this report.

The key findings identified in the FDS ZOI report simplify the number of ZOIs to characterize the HEAF hazard [16]:

- The dominant parameter affecting the ZOIs in NSBDs was the total arc energy.
    - A secondary parameter was the duct housing material (aluminum or steel).
- The bus-bar material composition does not have a significant effect on the ZOI. The ZOIs are within the uncertainty range for copper and aluminum bus-bar simulations for a given fault type and energy.
- The geometry of the duct (straight, elbow, or tee) does not have a significant effect on the ZOI.

Based on these observations, the FDS simulation results are grouped and linked to specific energetic ZOI end states in Section 9.3. The simulation grouping is described in detail in Appendix D of this report.

The energetic ZOIs are determined by the working group using the FDS simulation results for the applicable grouping. The general process involved a review of predicted ZOIs and the selection of a representative value within this group in units of feet. This value was then rounded up, in increments of 0.5 ft. Appendix D provides a more detailed description of this process and provides several examples for illustration. The NSBD ZOIs are provided in meters in Appendix E.

9.2 Energetic ZOIs for Bus Ducts

There are five different zones defined for NSBDs as summarized below:

- BDUAT: One scenario based on ZOI BDGenFed
- BDSAT: One scenario, with the analyst selecting the ZOI based on the anticipated FCT of the SAT (either BSAT0.5, BDSAT1, BDSAT1.5, BDSAT2, BDSAT3, BDSAT4, BDSATMAX).
- BD1: Two scenarios, one based on the normal power supply, and one based on the 4 second supply breaker limited. The analyst selects either:
    - Power Transformer
        - If normally powered by the UAT
            - FCT 0-0.5 seconds: BDGenFed
            - FCT 0.51-2 seconds: BDGF2
            - FCT 2.01-3 seconds: BDGF3
            - FCT $\geq$3 seconds: BDGFMAX
        - If normally powered by the SAT
            - FCT 0-0.50 seconds: BDSAT0.5
            - FCT 0.51-1.0 second: BDSAT1
            - FCT 1.01-1.50 seconds: BDSAT1.5
            - FCT 1.51-2 seconds: BDSAT2
            - FCT 2.01-3 seconds: BDSAT3
            - FCT 3.01-4 seconds: BDSAT4
            - FCT $\geq$4 seconds: BDSATMAX

- Supply breaker limited 4 seconds: BDSBL4 is the generic/default ZOI for the time for the Zone 1 bus supply circuit breaker to open. This value is based on the aggregate review of several NPPs and a bounding upper limit was chosen.
    - If more refinement is needed, the analyst can determine the actual Zone 1 bus supply circuit breaker opening time based on the speed of protection. This can be determined using the steps in Section 6.4.2. Based on the time, use one of the following end states:
        - Zone 1 bus supply circuit breaker FCT 0-0.50 seconds: BDSBL0.5
        - Zone 1 bus supply circuit breaker FCT 0.51-1.0 second: BDSBL1
        - Zone 1 bus supply circuit breaker FCT 1.01-1.50 seconds: BDSBL1.5
        - Zone 1 bus supply circuit breaker FCT 1.51-2 seconds: BDSBL2
        - Zone 1 bus supply circuit breaker FCT 2.01-3 seconds: BDSBL3
        - Zone 1 bus supply circuit breaker FCT 3.01-4 seconds: BDSBL4 (default)

- BD2: Two scenarios, one based on the normal power supply, and one based on the 2 second supply breaker limited.
    - Power transformer: Same as BD1
    - Supply breaker limited 2 seconds: BDSBL2 is the generic/default ZOI for the time for the Zone 2 bus supply circuit breaker to open. This value is based on the aggregate review of several NPPs and a bounding upper limit was chosen.
    - If more refinement is needed, the analyst can determine the actual Zone 2 bus supply circuit breaker opening time based on the speed of protection. This can be determined using the steps in Section 6.4.2. Based on the time, use one of the following end states:
        - Zone 2 bus supply circuit breaker FCT 0-0.50 seconds: BDSBL0.5
        - Zone 2 bus supply circuit breaker FCT 0.51-1.0 second: BDSBL1
        - Zone 2 bus supply circuit breaker FCT 1.01-1.50 seconds: BDSBL1.5
        - Zone 2 bus supply circuit breaker FCT 1.51-2 seconds: BDSBL2 (default)

- BDLV: One scenario based on ZOI BDLV

The analyst should determine the enclosure material of the initiating bus duct (either steel or aluminum) and then determine the fragility of nearby targets (either 15 MJ/m^2 or 30 MJ/m^2). The ZOIs are shown in Table 9-2.

Table 9-2
NSBD ZOIs

End state	Power transformer and fault clearing time	Bus duct enclosure material and target fragility			
		Steel enclosure with target fragility of 15 MJ/m^2 (feet)	Steel enclosure with target fragility of 30 MJ/m^2 (feet)	Aluminum enclosure with target fragility of 15 MJ/m^2 (feet)	Aluminum enclosure with target fragility of 30 MJ/m^2 (feet)
BDSAT0.5 BDSBL0.5	SAT - 0-0.50 s	0	0	0	0
BDSAT1 BDSBL1	SAT - 0.51-1.00 s	0	0	0.5	0.5
BDSAT1.5 BDSBL1.5	SAT - 1.01-1.50 s	0.5	0.5	1	1
BDSAT2 BDSBL2 BDLV	SAT -1.51 to 2.00 s Supply breaker limited (2 s) Low voltage	1	0.5	1.5	1
BDSAT3 BDSBL3	SAT - 2.01 to 3.00 s	2	1	2.5	1.5
BDSAT4 BDSBL4	SAT - 3.01 to 4.00 s Supply breaker limited* (4 s)	2.5	1.5	3	2
BDSATMAX	SAT ($\geq$4.01 s)	3	2	3.5	2
BDGenFed	UAT - 0 to 0.5 s + GF	2.5	1.5	3	2
BDGF2	UAT - 0.51 to 2 s + GF	3.5	2	4	2.5
BDGF3	UAT - 2.01 to 3 s + GF	4	2.5	4	2.5
BDGFMAX	UAT $\geq$3 s + GF	4.5	3	5	3

GF= generator fed
*For the supply breaker limited end state, an optional refinement can be made by calculating the FCT of the primary supply breaker for the MV switchgear feeding the NSBD following the steps in Section 6.4. The appropriate end state, either BDSAT0.5, BDSAT1, BDSAT1.5, BDSAT2, or BDSAT3 should be selected based on the FCT.

The distances provided in Table 9-2 should be measured from each outer surface in each direction around the bus duct, distance “X” as shown in the upper left corner of Figure 9-1 and Figure 9-2. In addition to the ZOI immediately around the bus duct, targets within an area below the postulated point of the bus duct fault are postulated damaged due to molten metal slag. The molten slag can damage and possibly ignite cables in the first open cable tray underneath the bus duct. This ‘waterfall’ is shown in the upper right of Figure 9-1 and on the right hand side of Figure 9-2. The “waterfall” has a distance of 1.5 feet from the edge of the duct and has a distance of the ZOI selected from

Table 9-2 Running along the duct in both directions centered at the postulated fault location (shown as distance “X” in the diagram).

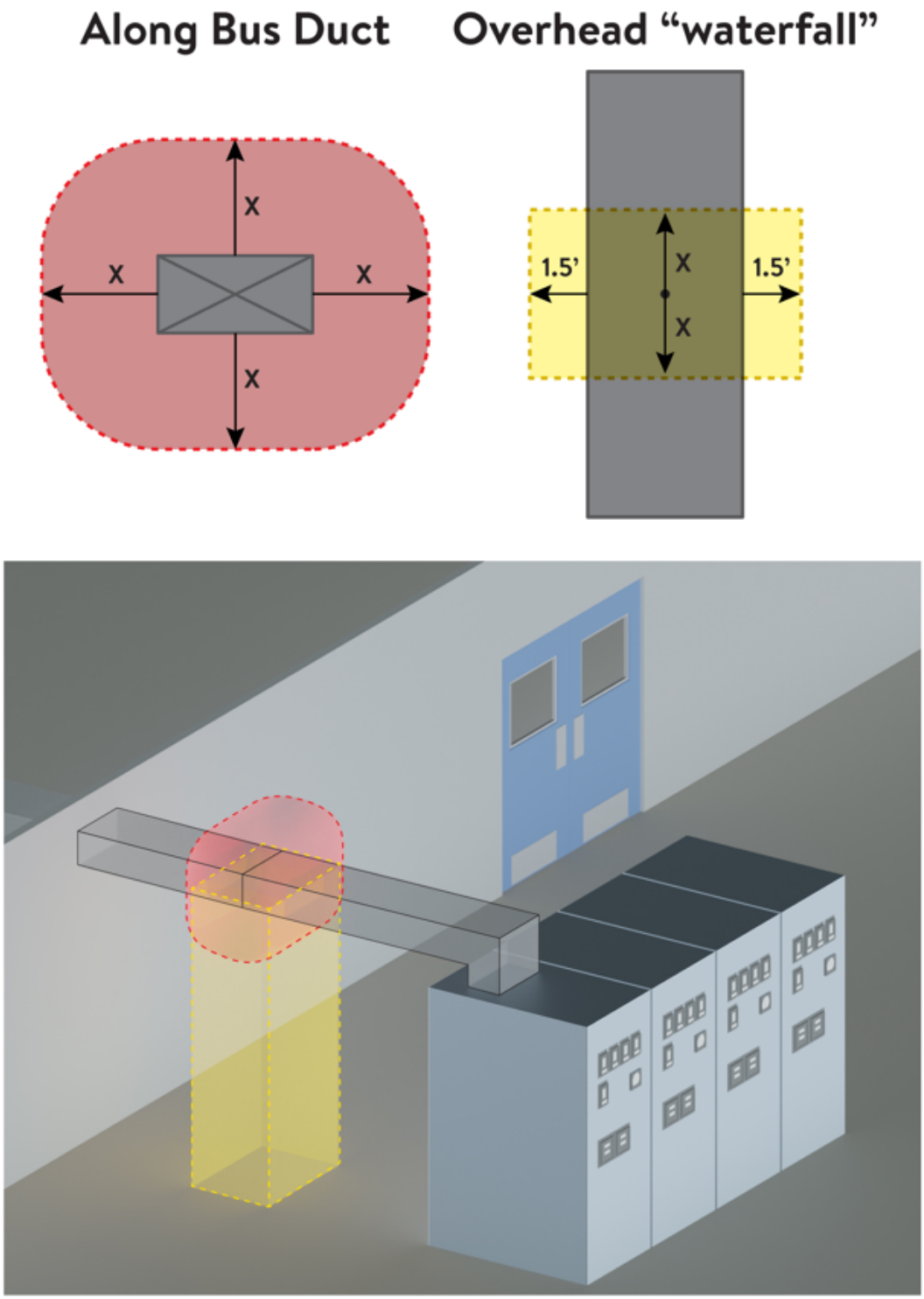

Figure 9-1
Depiction of Bus Duct ZOI

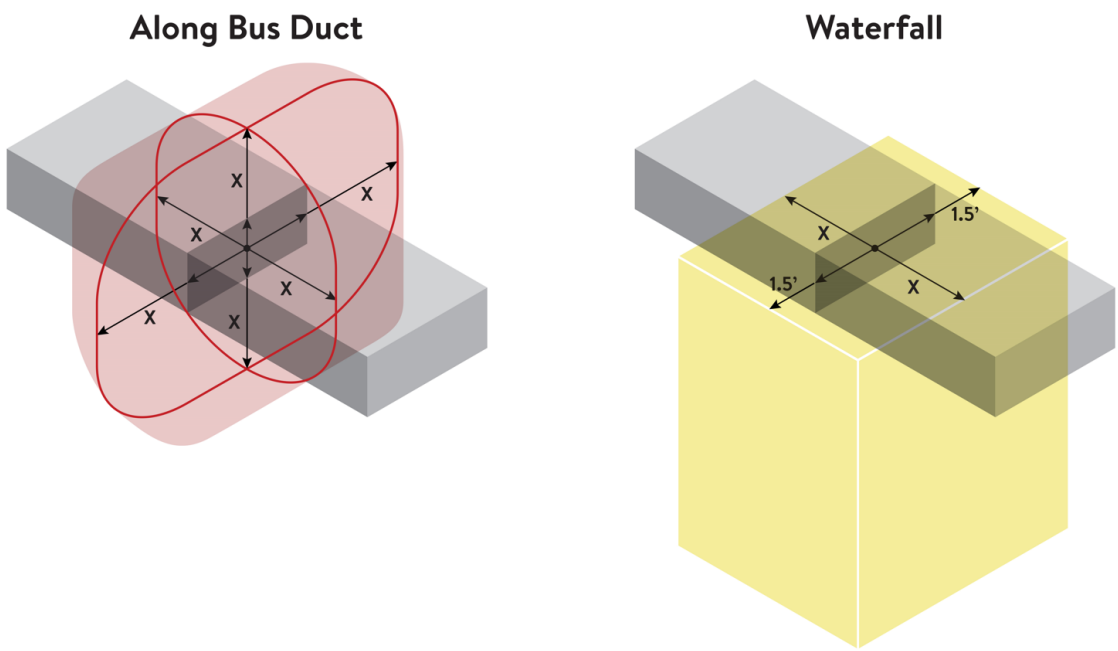

Figure 9-2
Alternate View of the Bus Duct ZOI

9.2.1 HEAFs in the IPBD

There is no change in the ZOI associated with an IPBD HEAF, analyst should continue to use the guidance in NUREG/CR-6850 Supplement 1 [2], which is repeated below:

> The zone of influence should assume damage to any component or cable that would normally be considered vulnerable to fire damage (i.e., excluding items such as water-filled piping that would not normally be considered vulnerable to fire damage) located within a sphere centered on the fault point and measuring 5 feet in radius. Any flammable or combustible material within this same zone of influence should be assumed to ignite. The recommended zone of influence is intended to cover both the initial fault effect and the potential burning of hydrogen gas that may be released at low pressure from the bus casing upon rupture. An enduring fire (i.e., lasting beyond the initial fault) should be assumed consistent with the nature of any flammable or combustible materials present within the zone of influence and potential fire spread beyond the zone of influence.
>
> For the case of fire occurring at the main transformer termination points, the potential for involvement of the main transformer (and its oil) should be considered. In particular, the electrical lines will each penetrate the casing of the transformer, and this could allow the fire to spread to the transformer itself. Failure of the electrical penetration seals (e.g., melting of a rubber boot) could also create a path for oil leakage outside of the transformer as was observed in FEDB 127.
>
> The analysis should also consider the potential for involvement of additional hydrogen gas beyond that which will leak from the casing as a result of the initial fault. That is, the configuration of, and potential failure in, the hydrogen purge/fill system should be evaluated to determine if additional leakage of hydrogen gas is plausible. This

assessment will require consideration of case-specific storage, piping, and valve arrangements.

For NPPs with installed GCBs, a factor of 3.5E-05 can be applied to the scenario frequency to ultimately reduce the frequency of generator fed faults. See Section 5.3.1 for more detail.

9.2.2 HEAFs in BDUAT

A fault in Zone BDUAT results in an UAT protective trip lockout (86) and subsequent turbine-generator trip (see Section 3.4). This is modeled as a generator fed fault, within the zone of differential protection (87) of the UAT. The ZOI associated with end state **BDGenFed** from

Table 9-2 should be used. The analyst should determine the enclosure material of the initiating bus duct (either steel or aluminum) and then determine the fragility of nearby targets (either 15 MJ/m^2 or 30 MJ/m^2).

For NPPs with GCBs, the GCB modifier can be used on bus duct scenarios fed by the UAT (Zone BDUAT). This factor of 3.5E-05 can be applied to the frequency to ultimately reduce the frequency of generator fed faults. This factor should only be applied for fault locations where the GCB can interrupt the fault.

9.2.3 HEAFs in BDSAT

A fault in Zone BDSAT is expected to result in a SAT protective trip lockout (86). The difference in duration is that subsequent SAT back-up protection schemes limit the duration of an off-site powered fed fault. The analyst should determine the backup fault clearing time and select either **BDSAT 0.5, BDSAT1, BDSAT1.5, BDSAT2**, **BDSAT3**, or **BDSAT4**, or **BDSATMAX** from

Table 9-2. The analyst should determine the enclosure material of the initiating bus duct (either steel or aluminum) and then determine the fragility of nearby targets (either 15 MJ/m^2 or 30 MJ/m^2).

9.2.4 HEAFs in Zone BD1

Zone BD1 covers a fault occurring in the region of NSBD between the first medium voltage switchgear and either the high side of the second downstream medium voltage switchgear bus supply breaker or the medium voltage portion of NSBD that feeds a load center (see Figure 3-1).

HEAFs in Zone BD1 can have two potential outcomes, a HEAF fed directly from the auxiliary power transformer or a supply breaker limited fault. A fault directly fed by the auxiliary power transformer in BD1 represents a fault in the NSBD with an independent failure of the Zone 1 bus supply circuit breaker. The supply breaker limited fault is a fault on the NSBD that is interrupted by the Zone 1 supply circuit breaker.

The split fraction for ZOI was developed through the expert panel exercise documented in Appendix C. The split fraction for BD1 of 5/95 closely resembles the split fraction for load and main bus bar portions of the Zone 1 switchgear.

For Zone BD1, the analyst can pick the limiting scenario (bounding ZOI) without using the split fraction in Figure 9-3. If the use of the split fraction is desired to achieve the risk objective, the analyst can use the split fractions of 5% fed by the auxiliary power transformer and 95% supply breaker limited. For the portion of the split fraction fed by the auxiliary power transformer, the analyst will select either the UAT branch or the SAT branch (based on the normal lineup of the NPP at power) and use the same time overcurrent (51) relay FCT identified for the Zone 1 MV switchgear that normally powers the NSBD.

The supply breaker limited portion can be further refined by determining the Zone 1 MV switchgear bus supply circuit breaker FCT. See Section 6.4.2 for more information on determining this FCT. If the FCT is 3 seconds or less, then a smaller ZOI can be used; either BDSBL0.5, BDSBL1, BDSBL1.5, BDSBL2, or BDSBL3 based on the determined FCT. If the Zone 1 switchgear has a load circuit breaker with overcurrent protection (not used as a maintenance switch) to the Zone 2 bus / Zone 3 load center and can interrupt in 3 seconds or less, then the corresponding FCT can be used to refine this ZOI (e.g., BDSBL0.5, BDSBL1, BDSBL1.5, BDSBL2, or BDSBL3 based on the determined FCT).

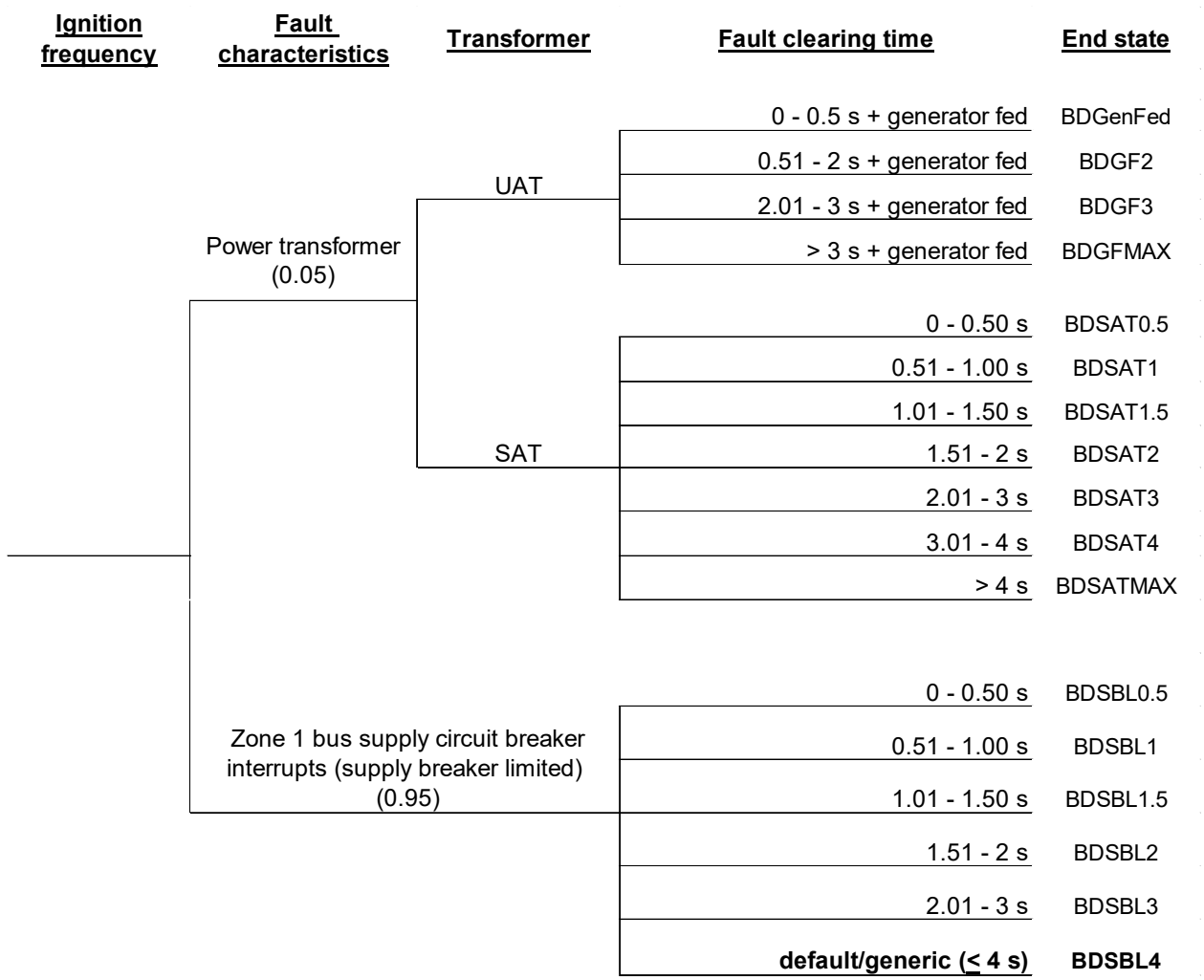

Figure 9-3
Zone BD1 ZOI Event Tree

9.2.5 HEAFs in Zone BD2

A fault in bus duct below the second MV switchgear occurs in Zone BD2. HEAFs in Zone BD2 can have two potential outcomes, a HEAF fed directly from the auxiliary power transformer or a supply breaker limited fault. A fault fed by the auxiliary power transformer in BD2 represents a fault in the NSBD with independent failures of the Zone 2 bus supply circuit breaker and, if selectively coordinated, with the Zone 1 bus supply circuit breaker. The supply circuit breaker scenario is a fault on the NSBD that is interrupted by the Zone 2 supply circuit breaker.

The split fraction for ZOI is developed through the expert panel exercise documented in Appendix C. The split fraction for BD2 of 5/95 closely resembles the split fraction for load and main bus bar portions of the Zone 2 switchgear.

For Zone BD2, the analyst can pick the limiting scenario, in this case, fed by the normal auxiliary power transformer without using the split fraction in Figure 9-4. If the use of the split fraction is necessary, the analyst can use the split fractions of 5% fed by the auxiliary power transformer and 95% supply breaker limited. For the portion of the split fraction directly fed by the auxiliary power transformer, the analyst will select the normal supply; either the UAT branch or the SAT branch and use the same fault clearing time identified for the Zone 1 and Zone 2 MV switchgear that normally powers this NSBD.

As a starting point, the analyst should use the 2 second supply breaker limited ZOI (BDSBL2). The supply breaker limited portion can be further refined by determining the Zone 2 MV switchgear bus supply circuit breaker FCT. See Section 6.4.2 for more information on determining this FCT. If the FCT is 1.5 seconds or less, then a smaller ZOI can be used; either BDSBL0.5, BDSBL1, or BDSBL1.5 based on the determined FCT.

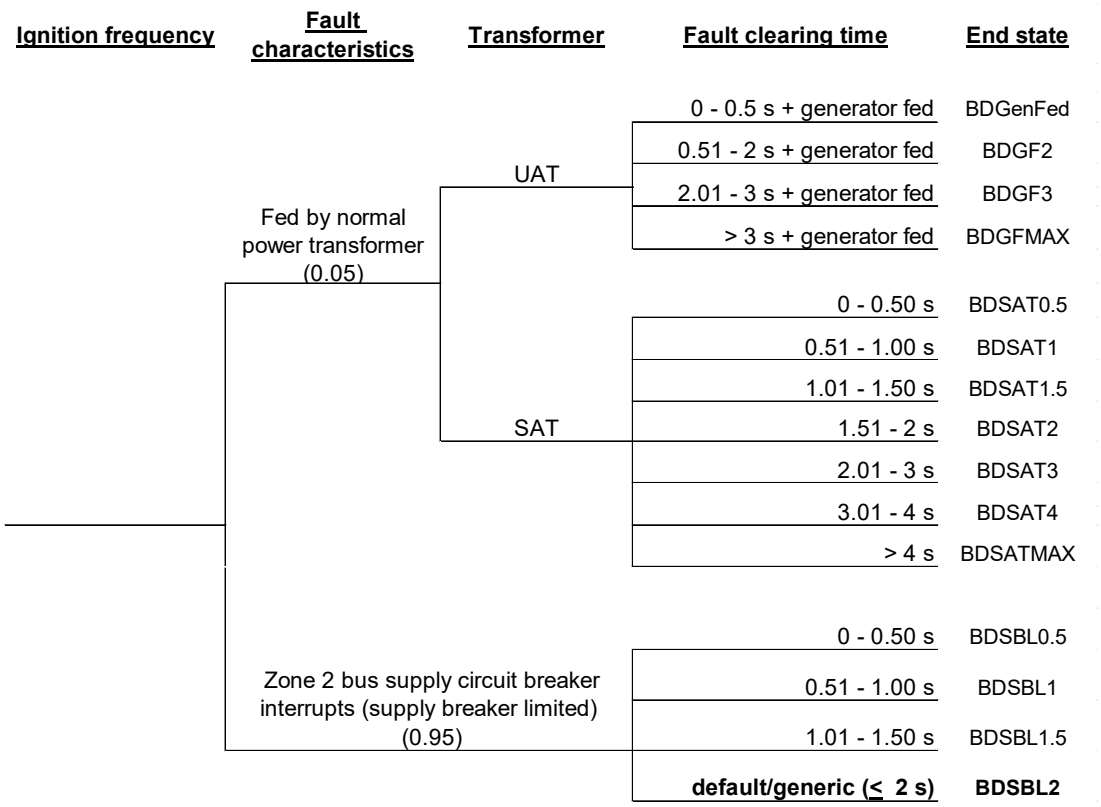

Figure 9-4
Zone BD2 ZOI Event Tree

9.2.6 HEAFs in BDLV

Some NPPs may have low voltage NSBDs. The analyst should use the ZOI associated with end state **BDLV** in Table 9-2. For the exclusion of HEAFs in low-voltage DC bus ducts, refer to Section 5.2.3.5.

10
SUMMARY

This report provides an updated methodology for modeling of HEAFs in fire PRA. The methodology in this report is summarized in the following sections.

10.1 High Energy Arcing Fault Generic Fault Zones

Fault zones are developed for portions of the EDS with similar potential fault durations. Fault zones of a common nuclear power plant electrical distribution system (EDS) are presented graphically in Figure 10-1. A short description of the fault zones is shown in Table 10-1.

Table 10-1
HEAF Zones

Fault zone	Portion of EDS	Ignition source bin	Equipment
IPBD	Iso-phase bus duct	16.2	Iso-phase bus duct connecting the station generator to the Unit Auxiliary Transformer(s) (UAT) and Generator Step-Up (GSU) transformer(s).
BDUAT	Bus duct between UAT and Zone 1	16.1-1	NSBD that connects the UAT secondary (tertiary) windings to the first downstream switchgear.
BDSAT	Bus duct between SAT and Zone 1	16.1-1	NSBD that connects the SAT secondary (tertiary) windings to the first downstream switchgear.
1	Medium voltage (MV) switchgear	16.b	First switchgear downstream of the UAT or SAT. This may also be referred to as an “intermediate bus” if it feeds another, downstream medium voltage bus.
2	MV switchgear	16.b	Second switchgear downstream of the UAT or SAT (via an intermediate bus).
3	Load center	16.a	Load centers or low voltage (LV) switchgear (480 to 1000 VAC).
BD1	MV bus duct between Zone 1 and Zone 2 and Zone 1 and Zone 3	16.1-2	Region of the MV NSBD between the first MV switchgear and either: • The high side of the second MV switchgear bus supply circuit breaker (bus duct from Zone 1 to Zone 2) or, • The high side of the load center (bus duct from Zone 1 to Zone 3).
BD2	MV bus duct between Zone 2 and Zone 3 and Zone 2 to Zone 2	16.1-2	Region of the MV NSBD between the second MV switchgear and: • The load center or step-down transformer • Another Zone 2 switchgear (bus tie).
LVBD	LV bus duct between Zone 1, Zone 2 and Zone 3 to Zone 3	16.1-2	Region of the LV NSBD between the Zone 1 step-down transformer and the load center (Zone 1 or Zone 2 to Zone 3) or between load centers (Zone 3 to Zone 3).

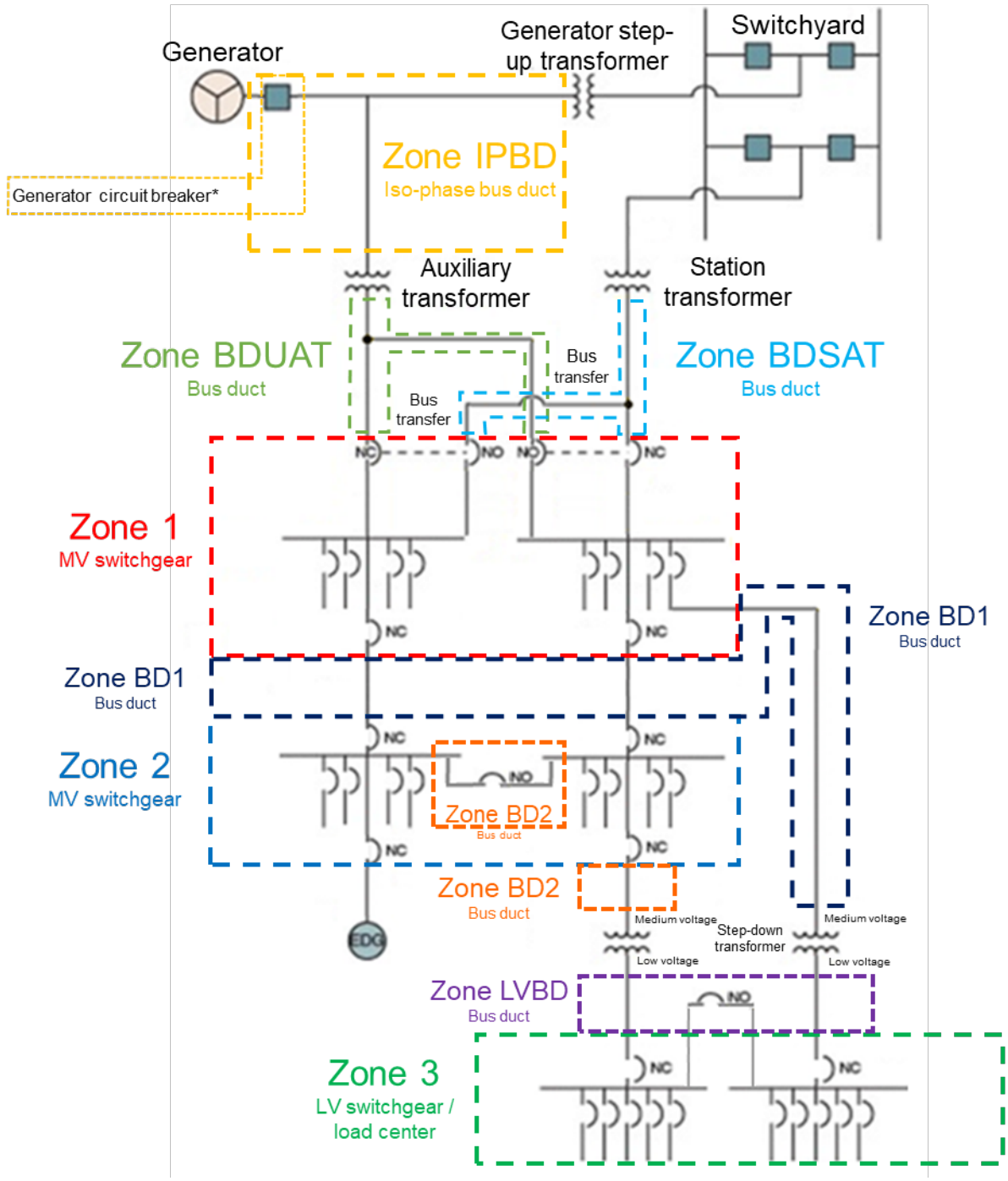

*Generator circuit breaker defined in Section 2 discussed in Section 5.3.1

Figure 10-1
HEAF Zones for a Generic NPP Electrical Distribution System

10.2 Summary of HEAF Methodology by Equipment Type

The HEAF methodology outlined in the preceding sections is summarized by general equipment type and location. For each equipment type the HEAF fault zone, counting guidance, ignition frequency, ZOIs, and ensuing fire location is summarized. For the HEAF manual suppression probability, the mean rate of 0.026 (from Table 5-10), can be applied for the post-HEAF ensuing fire for switchgear and load centers (including secondary combustibles) and ignition of combustibles in the waterfall region for NSBD HEAFs.

10.2.1 HEAFs in Load Centers

HEAFs in load centers are in HEAF fault zone 3. The counting guidance for Bin 16.a is as follows:

Bin 16.a: HEAFs for Low-voltage Electrical Cabinets (480 – 1000 VAC): Load center HEAFs are only postulated at the supply circuit breakers. Only count load centers supply circuit breakers. Note: load centers are no longer counted by vertical section.

The plant-wide fire ignition frequency for load centers, Bin 16.a is:

Bin	Ignition Source	Power Modes	Period	Mean	Median	5th percent	95th percent
16.a	HEAF for low-voltage electrical cabinets (480-1000V)	AA	2000-2021	5.32E-04	1.26E-04	4.67E-07	1.69E03

The energetic portion of the HEAF ZOI is dependent on the physical location of the supply circuit breaker within the load center. The full set of ZOIs are re-produced in Table 10-2.

Table 10-2
Load Center Energetic ZOIs

Load center supply circuit breaker location and target fragility	Arc Energy (MJ)	Back/ Front	Side (feet)	Top (feet)
End location, upper elevation: 15 MJ/m^2	90	None	2.5	2
End location, upper elevation: 30 MJ/m^2	90	None	1.5	1
End location, lower elevation: 15 MJ/m^2	90	None	2.5	None
End location, lower elevation: 30 MJ/m^2	90	None	1.5	None
Interior, upper elevation: 15 MJ/m^2	90	None	None	2
Interior, upper elevation: 30 MJ/m^2	90	None	None	1
Interior, lower elevation: 15 MJ/m^2	90	None	None	None
Interior, lower elevation: 30 MJ/m^2	90	None	None	None

Immediately following the energetic blast, the ensuing fire has a heat release rate (HRR) equal to the 98th percentile associated with switchgear and load centers. From NUREG-2178 Volume 1 [45] the 98th percentile HRR is 170 kW. The ensuing fire timing is modeled as:

- Growth period: 0 minutes (none)
- Steady burning period: 8 minutes
- Decay period: 19 minutes

The is no fire propagation to adjacent vertical sections.

10.2.2 HEAFs in Zone 1 (First downstream MV switchgear from auxiliary power transformer)

HEAFs in MV switchgear are in Zone 1. The counting guidance for Bin 16.b is as follows:

Bin 16.b: HEAFs for Medium-voltage Electrical Cabinets (>1000 VAC): The counting of medium voltage switchgear is based on the count of switchgear (each bank of switchgear is counted as one). Note: MV switchgear are no longer counted by vertical section.

HEAFs in Zone 1 are within fire ignition frequency bin 16.b. The ignition frequency for 16.b is:

Bin	Ignition Source	Power Modes	Period	Mean	Median	5th percent	95th percent
16.b	HEAF for medium-voltage cabinets (>1000V)	AA	2000-2021	1.98E-03	2.20E-04	3.59E-07	6.90E-03

As directed in Section 5.2.2.2, once all switchgears are counted and assigned a zone (either Zone 1 or Zone 2), the ignition frequency for Zone 1 is weighted using 86% of the generic fire ignition frequency. 86% of the generic fire ignition frequency is distributed between the Zone 1 switchgear.

MV switchgear screening ZOIs are reproduced in Table 10-3.

Table 10-3
Screening ZOIs for MV Switchgear

SAT fault clearing time	UAT fault clearing time into generator fed fault	15 MJ/m^2 target fragility (feet)	30 MJ/m^2 target fragility (feet)
SAT (0 to 4.00 seconds)	UAT (0-0.50 seconds)	3	2
SAT (≥ 4.01 seconds)	UAT (0.51 to 2.00 seconds)	3.5	2.5
	UAT (2.01 to 3.00 seconds)	4	3
	UAT (≥3.01 seconds)	4.5	3.5

Table 8-3 (15 MJ/m^2 fragility) or Table 8-4 (30 MJ/m^2 fragility) provide the configuration specific ZOIs for Zone 1.

Immediately following the energetic blast, the ensuing fire has a heat release rate (HRR) equal to the 98th percentile associated with switchgear and load centers. From NUREG-2178 Volume 1 [45] the 98th percentile HRR is 170 kW. The ensuing fire timing is modeled as:

- Growth period: 0 minutes (none)
- Steady burning period: 8 minutes
- Decay period: 19 minutes

Fire propagation to the adjacent vertical sections only occur for arc energies greater than 101 MJ. Do not postulated fire propagation for arc energies of 101 MJ and below. When fire spread is modeled, spread should occur in each vertical section that has an adjacent vertical section. The maximum number of vertical sections involved is limited to 3. See Section 6.5.1 for more details.

10.2.3 HEAFs in Zone 2 (MV switchgear downstream from Zone 1 switchgear)

HEAFs in MV switchgear are in Zone 2. The counting guidance for Bin 16.b is as follows:

Bin 16.b: HEAFs for Medium-voltage Electrical Cabinets (>1000 VAC): The counting of medium voltage switchgear is based on the count of switchgear (each bank of switchgear is counted as one). Note: MV switchgear are no longer counted by vertical section.

HEAFs in Zone 2 are within fire ignition frequency bin 16.b. The ignition frequency for 16.b is:

Bin	Ignition Source	Power Modes	Period	Mean	Median	5th percent	95th percent
16.b	HEAF for medium-voltage cabinets (>1000V)	AA	2000-2021	1.98E-03	2.20E-04	3.59E-07	6.90E-03

As directed in Section 5.2.2.2, once all switchgear are counted and assigned a zone (either Zone 1 or Zone 2), the ignition frequency for Zone 2 is weighted using 14% of the generic fire ignition frequency. 14% of the generic fire ignition frequency is distributed between the Zone 2 switchgear.

MV switchgear screening ZOIs are reproduced in Table 10-4.

Table 10-4
Screening ZOIs for MV Switchgear

SAT fault clearing time	UAT fault clearing time into generator fed fault	15 MJ/m^2 target fragility (feet)	30 MJ/m^2 target fragility (feet)
SAT (0 to 4.00 seconds)	UAT (0-0.50 seconds)	3	2
SAT (≥ 4.01 seconds)	UAT (0.51 to 2.00 seconds)	3.5	2.5
	UAT (2.01 to 3.00 seconds)	4	3
	UAT (≥3.01 seconds)	4.5	3.5

Configuration specific ZOIs are provided in Table 8-5 (15 MJ/m^2 fragility) and Table 8-6 (30 MJ/m^2 fragility). Two levels of refinement are provided.

Immediately following the energetic blast, the ensuing fire has a heat release rate (HRR) equal to the 98th percentile associated with switchgear and load centers. From NUREG-2178 Volume 1 [45] the 98th percentile HRR is 170 kW. The ensuing fire timing is modeled as:

- Growth period: 0 minutes (none)
- Steady burning period: 8 minutes
- Decay period: 19 minutes

Fire propagation to the adjacent vertical sections only occur for arc energies greater than 101 MJ. Do not postulated fire propagation for arc energies of 101 MJ and below. When fire spread is modeled, spread should occur in each vertical section that has an adjacent vertical

section. The maximum number of vertical sections involved is limited to 3. See Section 6.5.1 for more details.

10.2.4 HEAFs in NSBD in Zones BDUAT and BDSAT

HEAFs in non-segregated bus ducts connected to the auxiliary power transformers are in HEAF fault zone BDUAT (for bus duct off the UAT) and BDSAT (for bus duct off the SAT). The counting guidance for NSBDs is consistent with NUREG/CR-6850 Supplement 1 [2], with one addition identified in *italics*:

Bin 16.1-1 and 16.1-2: HEAFs for Non-segregated Bus Ducts

- For known transition points, the counting of non-segregated bus ducts is based off the total number of transition points. *Analysts should also look for fire PRA targets in locations with a potential for a HEAF to occur – ventilation openings, mechanical hatches, or external wall penetrations (e.g., yard to turbine building penetration) – and ensure they are captured with scenarios developed around the counted transition points.*
- For unknown transition points, the counting of non-segregated bus ducts is based off the total length of the bus duct.
- HEAFs are not postulated along the length of continuous bus ducts or cable ducts consistent with [2].

HEAFs in BDUAT and BDSAT are within fire ignition frequency bin 16.1-1. The ignition frequency for 16.1-1 is:

Bin	Ignition Source	Power Modes	Period	Mean	Median	5th percent	95th percent
16.1-1	HEAF for segmented bus ducts (Zone BDUAT and Zone BDSAT)	AA	2010-2021	2.61E-03	1.06E-03	6.31E-06	8.28E-03

For both BDUAT and BDSAT, the analyst should determine the enclosure material of the initiating bus duct (either steel or aluminum) and then determine the fragility of nearby targets (either 15 MJ/m^2 or 30 MJ/m^2). If the material is unknown, use the ZOIs for an aluminum enclosure.

For BDUAT, the ZOI is modeled with end state BDGenFed (within the zone of differential protection (87)) in Table 10-5.

Table 10-5
Energetic ZOIs for BDUAT

End state	Power transformer and fault clearing time	Bus duct enclosure material and target fragility			
		Steel enclosure with target fragility of 15 MJ/m^2 (feet)	Steel enclosure with target fragility of 30 MJ/m^2 (feet)	Aluminum enclosure with target fragility of 15 MJ/m^2 (feet)	Aluminum enclosure with target fragility of 30 MJ/m^2 (feet)
BDGenFed	UAT - 0 to 0.5 s + GF	2.5	1.5	3	2

For BDSAT, the ZOI is dependent on the FCT. The ZOIs are shown in Table 10-6. The analyst selects the ZOI based on the anticipated FCT of the time overcurrent relay and then selects a ZOI end state that fits within the fault clearing times (either BDSAT 0.5, BDSAT1, BDSAT1.5, BDSAT2, BDSAT3, BDSAT4, BDSATMAX).

Table 10-6
Energetic ZOIs for BDSAT (selected based on FCT)

End state	Power transformer and fault clearing time	Bus duct enclosure material and target fragility			
		Steel enclosure with target fragility of 15 MJ/m^2 (feet)	Steel enclosure with target fragility of 30 MJ/m^2 (feet)	Aluminum enclosure with target fragility of 15 MJ/m^2 (feet)	Aluminum enclosure with target fragility of 30 MJ/m^2 (feet)
BDSAT0.5	SAT - 0-0.50 s	0	0	0	0
BDSAT1	SAT - 0.51-1.00 s	0	0	0.5	0.5
BDSAT1.5	SAT - 1.01-1.50 s	0.5	0.5	1	1
BDSAT2	SAT -1.51 to 2.00 s	1	0.5	1.5	1
BDSAT3	SAT - 2.01 to 3.00 s	2	1	2.5	1.5
BDSAT4	SAT - 3.01 to 4.00 s	2.5	1.5	3	2
BDSATMAX	SAT ($\geq$4.01 s)	3	2	3.5	2

10.2.5 HEAFs in NSBD in Zones BD1, BD2, and LV

HEAFs in non-segregated bus ducts connected downstream of the MV switchgear are either in Zone BD1 (MV bus duct between Zone 1 and Zone 2 and also Zone 1 and Zone 3), BD2 (MV bus duct between Zone 2 and Zone 3, and also Zone 2 and Zone 2 [bus tie]), or LV (low-voltage bus ducts). The counting guidance for NSBDs is consistent with NUREG/CR-6850 Supplement 1 [2], with one addition identified in *italics*:

Bin 16.1-1 and 16.1-2: HEAFs for Non-segregated Bus Ducts

- For known transition points, the counting of non-segregated bus ducts is based off the total number of transition points. *Analysts should also look for fire PRA targets in locations with a potential for a HEAF to occur – ventilation openings, mechanical hatches, or external wall penetrations (e.g., yard to turbine building penetration) – and ensure they are captured with scenarios developed around the counted transition points.*
- For unknown transition points, the counting of non-segregated bus ducts is based off the total length of the bus duct.
- HEAFs are not postulated along the length of continuous bus ducts or cable ducts consistent with [2].

HEAFs in BD1, BD2, and BDLV are within fire ignition frequency bin 16.1-2. The ignition frequency for 16.1-2 is:

Bin	Ignition Source	Power Modes	Period	Mean	Median	5th percent	95th percent
16.1-2	HEAF for segmented bus ducts (BD1, BD2, BDLV)	AA	2000-2021	8.98E-04	1.73E-04	2.11E-07	2.95E-03

The analyst should determine the enclosure material of the initiating bus duct (either steel or aluminum) and then determine the fragility of nearby targets (either 15 MJ/m^2 or 30 MJ/m^2). If the material is unknown, use the ZOIs for an aluminum enclosure.

For BD1, up to two scenarios can be modeled (the analyst can also use the most bounding energetic ZOI):

- 5%: FCT based on normal supply from the auxiliary power transformer
- 95%: 4 second supply breaker limited fault (with refinement ZOI options for faster Zone 1 bus supply circuit breakers)

For BD2, up to two scenarios can be modeled (the analyst can also use the most bounding energetic ZOI):

- 5%: FCT based on normal supply from the auxiliary power transformer
- 95%: 2 second supply breaker limited fault (with refinement ZOI options for faster Zone 2 bus supply circuit breakers)

The ZOIs for BD1 and BD2, are shown in Table 10-7. The LV ZOIs are also shown in Table 10-7 (entry for end state BDLV).

Table 10-7
Energetic ZOIs for BD1, BD2, and LV

End state	Power transformer and fault clearing time	Bus duct enclosure material and target fragility			
		Steel enclosure with target fragility of 15 MJ/m^2 (feet)	Steel enclosure with target fragility of 30 MJ/m^2 (feet)	Aluminum enclosure with target fragility of 15 MJ/m^2 (feet)	Aluminum enclosure with target fragility of 30 MJ/m^2 (feet)
BDSAT0.5 BDSBL0.5	SAT - 0-0.50 s	0	0	0	0
BDSAT1 BDSBL1	SAT - 0.51-1.00 s	0	0	0.5	0.5
BDSAT1.5 BDSBL1.5	SAT - 1.01-1.50 s	0.5	0.5	1	1
BDSAT2 BDSBL2 BDLV	SAT -1.51 to 2.00 s Supply breaker limited (2 s) Low voltage	1	0.5	1.5	1
BDSAT3 BDSBL3	SAT - 2.01 to 3.00 s	2	1	2.5	1.5
BDSAT4 BDSBL4	SAT - 3.01 to 4.00 s Supply breaker limited* (4 s)	2.5	1.5	3	2
BDSATMAX	SAT ($\geq$4.01 s)	3	2	3.5	2
BDGenFed	UAT - 0 to 0.5 s + GF	2.5	1.5	3	2
BDGF2	UAT - 0.51 to 2 s + GF	3.5	2	4	2.5
BDGF3	UAT - 2.01 to 3 s + GF	4	2.5	4	2.5
BDGFMAX	UAT $\geq$3 s + GF	4.5	3	5	3

10.2.6 HEAFs in Iso-Phase Bus Ducts

HEAFs in the iso-phase bus duct are in HEAF fault zone IPBD. The counting guidance for Bin 16.a is as follows:

Bin 16.2: HEAFs for Iso-phase Bus Ducts: There should generally be one iso-phase bus per unit (an iso-phase bus includes all three phases). If there is more than one iso-phase bus, simply count the total number of iso-phase buses per unit.

HEAFs in IPBD are within fire ignition frequency bin 16.1-2. The ignition frequency for 16.1-2 is:

Bin	Ignition Source	Power Modes	Period	Mean	Median	5th percent	95th percent
16.2	HEAF for iso-phase bus ducts	AA	2000-2021	1.01E-03	2.81E-04	7.59E-07	3.28E-03

There is no change in the ZOI associated with an IPBD HEAF, analyst should continue to use the guidance in NUREG/CR-6850 Supplement 1 [2] with the ZOI as a sphere centered on a fault point and measuring 5 feet in radius.

10.3 Conclusions

This report provides comprehensive guidance on how to treat the HEAF hazard in nuclear power plants. The fault clearing time and more generally the arc energy are key parameters for defining the energetic ZOI. For load centers, switchgear, and bus ducts, the conductor material (either aluminum or copper) does not affect the ZOI dimensions.

For load centers, the energetic ZOIs are smaller than the energetic ZOI in NUREG/CR-6850 [1], however a post-HEAF ensuing fire is still postulated. The post-HEAF ensuing fire may be larger than the energetic ZOI depending on the configuration. Regardless of the supply circuit breaker location (elevation and interior/exterior) there is not a back or front energetic ZOI for load centers. For the smallest energetic ZOI, an interior supply circuit breaker on the lower half of the load center does not have an energetic ZOI (but a post-HEAF ensuing fire is still postulated). The largest energetic ZOI for a load center is a supply circuit breaker on the upper elevation at the end of the load center. This energetic ZOI has dimensions of 2.5 feet on the sides (no ZOI on back or front) and 2 feet vertically.

For medium voltage switchgear, numerous ZOIs are developed to support screening and detailed analysis. Again, a post-HEAF ensuing fire is postulated immediately following the energetic phase of the HEAF. The energetic ZOI dimensions are sensitive to the backup time overcurrent relay (51) setting of the auxiliary power transformer. Faster clearing times are not expected to challenge the energetic ZOI in NUREG/CR-6850 Appendix M [1]. The energetic ZOIs reported in NUREG/CR-6850 Appendix M are challenged for:

- The 15 MJ/m^2 fragility (thermoplastic targets and aluminum enclosed bus ducts) for fault points outside the auxiliary transformer zone of differential protection (87) (Zone 1 Loads and Zone 2).
    - UAT FCTs greater than 0.50 seconds and
    - SAT FCTs greater than 4 seconds
- The 30 MJ/m^2 fragility (thermoset targets and steel enclosed bus ducts) for fault points outside the transformer zone of differential protection (87) (Zone 1 Loads and Zone 2)
    - UAT FCTs greater than 3 seconds

For non-segregated bus ducts, the enclosure material (either aluminum or steel) has an impact on the ZOI dimensions. The steel enclosure requires more energy to breach the enclosure material which results in less exposure to nearby targets. An aluminum enclosure breaches faster than steel and exposes more of the faulted conditions to nearby targets. On average the aluminum enclosure ZOI is 0.5 feet larger than steel. Generally, the NSBD ZOIs are larger than NUREG/CR-6850 Supplement 1 [2], with the exception of bus ducts with fast clearing times of the upstream SAT.

11
REFERENCES

1. EPRI 1011989 and NUREG/CR-6850, *EPRI/NRC-RES Fire PRA Methodology for Nuclear Power Facilities: Volume 2: Detailed Methodology*. Electric Power Research Institute (EPRI), Palo Alto, CA, and U.S. Nuclear Regulatory Commission, Office of Nuclear Regulatory Research (RES), Rockville, MD: 2005.
2. EPRI 1019259/NUREG/CR-6850, Supplement 1, *Fire Probabilistic Risk Assessment Methods Enhancements*, EPRI, Palo Alto, CA, and the U.S. Nuclear Regulatory Commission, Washington, DC, 2010.
3. NUREG/IA-0470, *Nuclear Regulatory Authority Experimental Program to Characterize and Understand High Energy Arcing Fault (HEAF) Phenomena*. U.S. Nuclear Regulatory Commission, Office of Nuclear Regulatory Research (RES), Washington, DC: 2016.
4. San Onofre 3 LER 2001-001, Fire and RPS/ESF Actuations Caused By The Failure of a Non-Safety Related 4.16kV Circuit Breaker, April 2, 2001.
5. NEA/CSNI/R(2013)6, *OECD Fire Project – Topical Report No. 1 – Analysis of High Energy Arcing Fault (HEAF) Fire Events*, Organisation for Economic Co-operation and Development and Nuclear Energy Agency, 2013.
6. NRC Information Notice 2017-04: High Energy Arcing Faults in Electrical Equipment Containing Aluminum Components, U.S. Nuclear Regulatory Commission, Office of Nuclear Regulatory Regulation (NRR), Washington, DC: 2017.
7. NEA/CSNI/R(2017)7, *Report on the Testing Phase (2014-2016) of the High Energy Arcing Fault Events (HEAF) Project Experimental Results from the International Energy Arcing Fault Research Programme*, Organisation for Economic Co-operation and Development and Nuclear Energy Agency, 2017.
8. ML16126A096, *Submittal of Possible Generic Issue Concerning the Damage Caused by High Energy Arc Faults in Electrical Equipment Containing Aluminum Components*, Memorandum to Thomas Boyce*),* U.S. Nuclear Regulatory Commission, Office of Nuclear Regulatory Research (RES), Washington, DC: 2016.
9. Draft Test Plan, High Energy Arcing Faults in Electrical Equipment Phase 2, 2017. Available at NRC ADAMS Accession Number: ML18102A60.
10. *Report on High Energy Arcing Fault Experiments – Experimental Results from Low-Voltage Switchgear Enclosures*, U.S. Nuclear Regulatory Commission. RIL 2021-17.
11. EPRI 3002011922, *Characterization of Testing and Event Experience for High Energy Arcing Fault Event*, EPRI, Palo Alto, CA: December 2017.
12. EPRI 3002015992, *Nuclear Station Electrical Distribution Systems and High-Energy Arcing Fault Events*, EPRI, Palo Alto, CA: July 2019.
13. EPRI 3002015459, *Critical Maintenance Insights on Preventing High-Energy Arcing Faults*, EPRI, Palo Alto, CA: March 2019.

14. *HEAF Cable Fragility Testing at the Solar Furnace at the National Solar Thermal Test Facility*, U.S. Nuclear Regulatory Commission. RIL 2021-09.

15. *Target Fragilities for Equipment Vulnerable to High Energy Arcing Faults*. U.S. Nuclear Regulatory Commission, Office of Nuclear Regulatory Research (RES), Washington, DC, and Electric Power Research Institute (EPRI), Palo Alto, CA: 2022. RIL 2022-01 and EPRI 3002023400.

16. *Determining the Zone of Influence for High Energy Arcing Faults Using Fire Dynamics Simulator.* U.S. Nuclear Regulatory Commission, Office of Nuclear Regulatory Research (RES), Washington, DC, and Electric Power Research Institute (EPRI), Palo Alto, CA: 2022. RIL 2022-09 and EPRI 3002025123.

17. "Closure of Proposed Generic Issue PRE-GI-018, "High-Energy Arc Faults Involving Aluminum," NRC Memo from Raymond V. Furstenau to Andrea Veil. Dated August 31, 2021. Available at NRC ADAMS Accession Number: ML21237A360.

18. "Prompt Safety Concern Determination Regarding Aluminum Enhanced High Energy Arcing Faults," NRC Memo from Michael Montecalvo and Charles Moulton to Michael X. Franovich. Dated October 5, 2021. Available at NRC ADAMS Accession Number: ML21272A262.

19. Pfeiffer, J. Arc Flash Calculations, An Important Tool in Fire & Electrical Accident Investigations, Fire and Arson Investigator, firearson.com, July 2005.

20. IEEE Standard C37.95-2002, *IEEE Guide for Protective Relaying of Utility-Consumer Interconnections*.

21. IEEE 308-2012, IEEE Standard Criteria for Class 1E Power Systems for Nuclear Power Generating Stations. IEEE, New York, NY: 2012.

22. IEEE 384-1974, IEEE Trial-Use Standard Criteria for Separation of Class 1E Equipment and Circuits.

23. IEEE Standard C37.013-1997, *IEEE Standard for AC High-Voltage Generator Circuit Breakers Rated on a Symmetrical Current Basis*.

24. IEEE 1584, IEEE Guide for Performing Arc Flash Hazard Calculations, 2002. IEEE, New York, NY.

25. IEEE Standard C57.109-1985, *IEEE Guide for Transformer Through-Fault-Current Duration*.

26. IEEE Standard C37.23-2003, *IEEE Standard for Metal-Enclosed Bus*.

27. ANSI C37.06-2000, *AC High-Voltage Circuit Breakers Rated on a Symmetrical Current Basis— Preferred Ratings and Related Required Capabilities*.

28. Not used.

29. *Through-Fault Capability Requirements for Unit Auxiliary Transformers*, IEEE Transactions on Power Apparatus and Systems, Vol. PAS-96, no. 5, September/October 1977, T. M. McCauley.

30. INPO SER 19-95, *Deficient Fast Bus Transfer Results in Reactor Scram and Fire in 4.16kV Non-Vital Switchgear.*

31. IEEE Standard C37.20.2-1999, *IEEE Standard for Metal-Clad Switchgear*.

32. IEEE Standard C37.04-1999, *IEEE Standard Rating Structure for AC High-Voltage Circuit Breakers*.

33. *Report on High Energy Arcing Fault Experiments: Experimental Results from Low-Voltage Switchgear Enclosures.* U.S. Nuclear Regulatory Commission, December 2021. RIL 2021-17.

34. IEEE C37.20.1-2015, IEEE Standard for Metal-Enclosed Low-Voltage (1000 Vac and below, 3200 Vdc and below) Power Circuit Breaker Switchgear. IEEE, New York, NY: 2015.

35. *The Updated Fire Events Database: Description of Content and Fire Event Classification Guidance*. EPRI, Palo Alto, CA: 2013. 1025284

36. *Fire Events Database Update for the Period 2010-2014: Revision 1.* EPRI, Palo Alto, CA: 2016. 3002005302.

37. FAQ 14-009, Treatment of Well Sealed MCC Electrical Panels Greater than 440V, Revision I, April 2015. Accessible at ADAMS Accession Number: ML15118A810.

38. EPRI 3002002936 and NUREG-2169, *Nuclear Power Plant Fire Ignition Frequency and Non-Suppression Probability Estimation Using the Updated Fire Events Database*. EPRI, Palo Alto, CA, and U.S. Nuclear Regulatory Commission, Office of Nuclear Regulatory Research (RES), Rockville, MD: 2015.

39. FAQ 17-0013, High Energy Arcing Fault (HEAF) Non-Suppression Probability (NSP), Rev C. Final, March 2018.

40. Palazzo, M., et. Al., "Reliability Analysis of Generator Circuit-Breakers," CIGRE 2012.

41. "Close-out of National Fire Protection Association Standard 805 Frequently Asked Question 08-0053, 'Kerite-FR Cable Failure Thresholds,' Revision 1," NRC Memo from Alexander R. Klein. Dated June 6, 2012. Available at NRC ADAMS Accession Number: ML121440155.

42. Fire Dynamics Simulator Technical Reference Guide Volume 1: Mathematical Model, NIST SP 1018-1, National Institute of Standards and Technology, Gaithersburg, MD, 2021.

43. Fire Dynamics Simulator User's Guide, NIST SP 1019, National Institute of Standards and Technology, Gaithersburg, MD, 2021.

44. *Survey and Analysis of U.S. Nuclear Industry Relative to High Energy Arcing Faults in the Presence of Aluminum.* EPRI, Palo Alto, CA: May 2021. 3002020692.

45. NUREG-2178 Volume 1 and EPRI 3002005578, *Refining and Characterizing Heat Release Rates from Electrical Enclosures During Fire: Peak Heat Release Rates and Effect of Obstructed Plume.* U.S. Nuclear Regulatory Commission, Washington, DC, and EPRI, Palo Alto, CA: 2016.

46. NUREG-2178 Volume 2, and EPRI 3002016052, *Refining and Characterizing Heat Release Rates from Electrical Enclosures During Fire: Fire Modeling Guidance for Electrical Cabinets, Electric Motors, Indoor Dry Transformers, and the Main Control Board*, U.S. Nuclear Regulatory Commission, Washington, DC, and EPRI, Palo Alto, CA: 2019.

47. FAQ 16-011, Cable Tray Ignition, June 2, 2016. ADAMS Accession Number: ML18074A021.

48. *Cable Heat Release, Ignition, and Spread in Tray Installations During Fire (CHRISTIFIRE), Phase 1: Horizontal Trays*, U.S. Nuclear Regulatory Commission, Washington, DC, July 2012. NUREG/CR-7010.

49. Not used.

50. *IEEE Std 946-2004, Recommended Practice for the Design of DC Auxiliary Power Systems for Generating Stations.*

51. *IEEE 100, The Authoritative Dictionary of IEEE Standards Terms, Seventh Edition, Institute of Electrical and Electronic Engineers (IEEE), New York, NY, DOI: 10.1109/IEEESTD.2000.322230, 2000.*

52. NRC FAQ 13-0006, Modeling Junction Box Scenarios in a Fire PRA, ADAMS Accession No. ML13212A378, U.S. Nuclear Regulatory Commission, Washington, DC 20555-0001, 2013.

53. *RIL 2021-18, "Report on High Energy Arcing Fault Experiments, Experimental Results from Open Box Enclosures," U.S. Nuclear Regulatory Commission, Washington, DC 20555-0001, NIST TN 2198, National Institute of Standards and Technology, Gaithersburg, MD, SAND2021-16075 R, Sandia National Laboratories, Albuquerque, NM, 2021.*

54. NRC Special Inspection Report Fort Calhoun Station, Special Inspection Report 05000285/2011014; Finding of Preliminary High Safety Significance, (ADAMS Accession No. ML12072A128), U.S. Nuclear Regulatory Commission, Washington, DC 205555-0001, 2012.

55. LER 2011-008-1, Licensee Event Report 2011-008, Revision 1, for the Fort Calhoun Station, (ADAMS Accession No. ML113010208), 2011.

56. UL 50, Enclosures for Electrical Equipment, Non-Environmental Considerations, Underwriter Laboratories, Northbrook, Illinois, 2015.] [Ref. H. NEMA 250, Enclosures for Electrical Equipment (1000 Volts Maximum), National Electrical Manufactures Association, Rosslyn, VA, 2008.

57. IEEE 141, Recommended Practice for Electrical Power Distribution for Industrial Plants, Institute of Electrical and Electronic Engineers, New York, NY, 1993.

58. EPRI 3002016051 and NUREG-2230, *Methodology for Modeling Fire Growth and Suppression Response for Electrical Cabinet Fires in Nuclear Power Plants*. EPRI, Palo Alto, CA, and U.S. Nuclear Regulatory Commission, RES, Rockville, MD: 2020.

59. ANSI C50.41-2000, *American National Standard for Polyphase Induction Motors for Power Generating Stations.*

APPENDIX A
SUMMARY OF U.S. HEAF EXPERIENCE

A.1 Summary of HEAF Events in the U.S. Nuclear Power Industry from 1979-2021

A summary of HEAF events in the U.S. nuclear power industry between 1979 and 2017 are presented in Table A-1. These summaries include:

1. Event information including the duration of the arcing fault, the means of extinguishment, and the suppression time,
2. Initiating electrical component information including the equipment voltage, the arcing fault location, the safety class, the arc material, the EDS configuration from Reference [12], the HEAF fault zone (Section 3), and the ignition source bin (Section 5),
3. A summary of the event, and
4. Summary observations on the ZOI and the HEAF subdivision (arc flash, arc blast, or HEAF).

Table A-1
Summary of HEAFs in the U.S. Nuclear Power Industry 1979 through 2021

Event Information	Initiating Electrical Component	Summary of Event	Event Zone of Influence
Incident Number: 195 Date: 04/15/1980 Location: Reactor Building Duration of Arc Fault: <2 seconds Means of Extinguishment: Unknown Suppression Time: N/A	Equipment: 480 V segmented bus duct Arc Fault Location: N/A Safety Class: Non-1E Arc Electrode Material: Aluminum (6.9kV) EDS Configuration: 7 Fault Zone: LVBD Bin N/A	Operating normally at 96% power, an arcing fault occurred on the feeder bus from a 480 V segmented bus duct during a 4 kV shutdown bus transfer. The fault was caused by a loose busway bolt.	The board supplied by the bus was reenergized by an alternate source and was not damaged by the fault. Subdivision: Arc Flash
Incident Number: 434 Date: 08/02/1984 Location: Turbine Building Duration of Arc Fault: Unknown Means of Extinguishment: Automatic Halon System Suppression Time: N/A	Equipment: 480V Switchgear Arc Fault Location: Breaker Safety Class: Non-1E Arc Electrode Material: Unknown EDS Configuration: Unknown Fault Zone: 3 Bin 16.a	During normal operation in Mode 1, a fault occurred in the 480 V supply bus air-cooled circuit breaker (ACB). The cause of the fault was attributed to high resistance in the main disconnecting contacts of the center phase of the ACB which caused an arc to propagate to the outside phases. The halon suppression system actuated. The fire brigade responded as required to verify that fire was out.	The arcing fault damaged the metal enclosure of the breaker and the bus tie breaker below due to falling debris. The ensuring fire burnt wire insulation in three cubicles of the switchgear section, meter and relay covers outside the switchgear and a few control cables in cable trays above the switchgear. Subdivision: HEAF
Incident Number: 575 Date: 03/19/1987 Location: Yard Duration of Arc Fault: 4-15 seconds Means of Extinguishment: Deluge Suppression System Suppression Time: 23 minutes	Equipment: 4.16 and 6.9 kV segmented bus duct Arc Fault Location: N/A Safety Class: Non-1E Arc Electrode Material: Aluminum EDS Configuration: 8 Fault Zone: BDUAT Bin 16.1-1	Operating at 54% power in Operation Condition 1 an arcing fault occurred in a non-segregated bus duct feeding the 4.1 and 6.9 kV loads from the Unit Auxiliary Transformer. The arcing event was likely cause by moisture intrusion into the bus duct. During the event the UAT deluge system actuated.	The destructive nature of the fault hampered the investigation process, and it is not known on which bus duct (4.1 or 6.9 KV) the initiating fault occurred. Subdivision: HEAF
Incident Number: 922 Date: 07/10/1987 Location: Turbine Building Duration of Arc Fault: 4-15 seconds Means of Extinguishment: De-energized Suppression Time: 5 minutes	Equipment: 4.16 kV segmented bus duct Arc Fault Location: N/A Safety Class: Non-1E Arc Electrode Material: Aluminum EDS Configuration: 8 Fault Zone: BDUAT Bin 16.1-1	During normal operation an insulation failure and resulting ground fault caused an arcing event in a 4.16 kV segmented bus duct. The bus fire terminated once the transformer was deenergized.	No other equipment was damaged. A small fire developed as a result of falling aluminum slag igniting rags and rubber goods on a maintenance cart below the duct. Subdivision: HEAF

Table A-1 Summary of HEAFs in the U.S. Nuclear Power Industry 1979 through 2021 (cont.)

Event Information	Initiating Electrical Component	Summary of Event	Event Zone of Influence
Incident Number: 678 Date: 03/02/1988 Location: Turbine Building Duration of Arc Fault: 4-15 seconds Means of Extinguishment: De-energized Suppression Time: 1 minute	Equipment: 4.16 kV segmented bus duct Arc Fault Location: N/A Safety Class: Non-1E Arc Electrode Material: Copper EDS Configuration: 8 Fault Zone: BDUAT Bin 16.1-1	At 93% power for the end of life coast-down prior to annual refueling outage an arcing fault occurred on a 4.16 kV bus. The fault was caused by an insulation failure. The differential current protection functioned as designed and opened all breakers on the affected protection zone. This deenergized the affected bus and terminated the fire.”	A 10′ section of the bus bar running from the main auxiliary transformer to the bus switchgear was damaged Several non-safety related cables in a tray adjacent to the bus bar were damaged. Subdivision: HEAF
Incident Number: 732 Date: 07/06/1988 Location: Turbine Building Duration of Arc Fault: 1.15 seconds Means of Extinguishment: Unknown Suppression Time: 19 minutes	Equipment: 13.8 kV Switchgear Arc Fault Location: Bus Bar Safety Class: Non-1E Arc Electrode Material: Copper EDS Configuration: 8 Fault Zone: 1 Bin: 16.b	Operating in Mode 1, at 100% power, a ground fault occurred on a 13.8 kV switchgear. Breaker on 1E-NAN-S02 successfully opens in 0.34 seconds (No HEAF). Fifty-five (55) minutes later Operations attempts to reenergize Bus 1E-NAN-S02. The initial fault still exists and a HEAF lasting 1.15 seconds occurs before the breaker on 1E-NAN-S04 can open and clear the fault as designed.	Damage from the arcing fault breached top of switchgear cubicle and damaged nearby cubicles. No other equipment was damaged by the arcing fault. Subdivision: HEAF
Incident Number: 947 Date: 01/03/1989 Location: Turbine Building Duration of Arc Fault: 4 – 15 seconds Means of Extinguishment: Manual Water Fog Suppression Time: 46 minutes	Equipment: 6.9 kV Switchgear Arc Fault Location: Unknown Safety Class: Non-1E Arc Electrode Material: Copper EDS Configuration: 1 Fault Zone: 1 Bin 16.b	During a power escalation following an earlier trip, at 26% power, an unknown equipment failure caused an arcing fault on a 6.9 kV switchgear. CO_2 fire extinguishers were used for the first time around 15 minutes after the fire brigade was dispatched. The fire was not suppressed. Dry chemical extinguishers were used 8 minutes after the CO_2 extinguishers. The fire was not suppressed. Eighteen minutes after the dry chemical extinguishers were used, the fire brigade decided to use water fog on the fire. Fire reported out 15 minutes later.	Internal components in the switchgear caught fire. Cables near the switchgear fire caught fire. The rear cubicle door was blown-off by the arcing event. Evidence suggests that any target located within 1 m (3-5’) could have been damaged by the event Subdivision: HEAF

Table A-1 Summary of HEAFs in the U.S. Nuclear Power Industry 1979 through 2021 (cont.)

Event Information	Initiating Electrical Component	Summary of Event	Event Zone of Influence
Incident Number: 929 Date: 10/09/1989 Location: Turbine Building Duration of Arc Fault: 4 – 15 seconds Means of Extinguishment: Deluge Suppression System Suppression Time: 160 minutes	Equipment: 22 kV iso-phase bus duct Arc Fault Location: N/A Safety Class: Non-1E Arc Electrode Material: Aluminum EDS Configuration: 6 Fault Zone: IPBD Bin 16.2	Operating at 100% power, an electrical fault occurred on a 22 kV iso-phase bus duct. The fault was a result of aluminum debris in the bus duct from previous failures of the duct cooling system dampers. The ensuring fires were suppressed by actuation of a deluge suppression system and the use of dry chemical extinguishers.	The initial fault caused three ensuing fires: 1) a transformer oil fire, 2) a hydrogen fire under the main generator, and 3) a small oil fire in the generator housing. Subdivision: HEAF
Incident Number: 18 Date: 07/13/1990 Location: Auxiliary Building Duration of Arc Fault: Unknown Means of Extinguishment: N/A Suppression Time: N/A	Equipment: 4 kV Switchgear Arc Fault Location: Breaker Safety Class: Non-1EArc Electrode Material: Aluminum EDS Configuration: 8 Fault Zone: 1 Bin N/A	At Mode 5 for a scheduled refueling outage, an arcing fault occurred when a contract electrician made contact with an incoming feed cables in the back of a 4 kV breaker cubicle. The workers involved may not have known the feed lines were still energized, despite the fact that when the load side was deenergized when the breaker was racked out the bus feed breakers remain energized. The fire brigade responded to the event and found no fire.	The electrician who made contact with the feed cables was killed. Three other people in the area were injured by the fault. Subdivision: Arc Flash

Table A-1 Summary of HEAFs in the U.S. Nuclear Power Industry 1979 through 2021 (cont.)

Event Information	Initiating Electrical Component	Summary of Event	Event Zone of Influence
Incident Number: 74 Date: 06/10/1995 Location: Turbine Building Duration of Arc Fault: 4 to 15 seconds Means of Extinguishment: Fire Brigade Fire Extinguishers Suppression Time: 80 minute	Equipment: 4.16 kV Switchgear Arc Fault Location: Breaker Safety Class: Non-1E Arc Electrode Material: Copper EDS Configuration: 6 Fault Zone: 1 Bin 16.b	Operating in Mode 1, at 100% power, an arcing fault occurred in a 4.16 kV switchgear due to an improper automatic bus transfer from the Unit Auxiliary Transformer to the Startup Transformer. Twenty-nine minutes after operator notices smoke in the Turbine Generator Building, a fire is reported above the A2 switchgear. The fire brigade attempted to extinguish the fire using Halon, CO_2, and dry chemical extinguishers. Forty three minutes after the initial attempt to extinguish the fire with fire extinguishers, the offsite Fire Department applies water to the insulation above the A2 bus.	Damage to the breaker and surrounding equipment indicates that the fault energy was extremely high. The arc chutes were destroyed, the contact structures were damaged extensively, and the breaker frame and cubicle were also damaged. The main bus and bus compartment experienced severe arcing damage. The main contacts on all the phases were destroyed. Significant damage to two switchgear cubicles. Three meters (10’) of the feeder cable was destroyed. External thermal damage to the jackets of 4 of the 15 feeder cables was observed. Burn marks were observed on external cable conduits. Subdivision: HEAF

Table A-1 Summary of HEAFs in the U.S. Nuclear Power Industry 1979 through 2021 (cont.)

Event Information	Initiating Electrical Component	Summary of Event	Event Zone of Influence
Incident Number: 100 Date: 05/15/2000 Location: Turbine Building Duration of Arc Fault: 4-8 seconds Means of Extinguishment: Fire Brigade, CO_2 extinguisher Suppression Time: 35 minutes	Equipment: 12 kV segmented bus duct Arc Fault Location: N/A Safety Class: Non-1E Arc Electrode Material: Aluminum EDS Configuration: 1 Fault Zone: BDUAT Bin 16.1-1	Operating at 100% power, a phase-to-phase arcing fault occurred on the 12 kV bus between the Unit Auxiliary Transformer and a non-vital switchgear. The cause of the fault could not be conclusively determined. The fault continued to be fed for 4-8 seconds by the decay of the main generator electrical field during generator coast-down, contributing to catastrophic failure of the bus bars. The fire brigade arrived at the switchgear room and determined that the fire was internal to the switchgear room and not associated with the UAT given the large amount of smoke, the fire brigade captain requested off-site fire brigade support. The fire brigade extinguished a small fire in the 12 kV bus duct with a carbon dioxide extinguisher within 17 minutes of arriving at the switchgear room.	Approximately 1 m (3 ft) of the 12 kV bus bar was vaporized and approximately 0.2 m (6-9 in) of the exterior bus bars were missing. The bottom and top of the bus duct was melted for several feet, along with sections of the duct work on the perpendicular 12 kV bus sections at the tee connection. The ensuing fire burned an approximately 0.3 m (1 ft) square hole in the bottom of a second 4 kV bus duct 0.1 m (4 in) above the 12 kV bus duct. The 4 kV bus bars and duct were covered with black soot, but the only conductor damage was a small piece of metal missing from the center bus bar and one outer bus bar, which the is indicative of a single phase-to-phase fault. The floor beneath the fault contained a large slag pile, and a great deal of metal had splattered on the face of 12 kV non-vital switchgears and were not damaged internally. Smoke patterns on the cabinet doors indicate that plastic components on the cabinet faces (e.g., gauge faces, identifier tags, indicator lamp housings) ignited and burned during the event.
			Subdivision: HEAF

Table A-1 Summary of HEAFs in the U.S. Nuclear Power Industry 1979 through 2021 (cont.)

Event Information	Initiating Electrical Component	Summary of Event	Event Zone of Influence
Incident Number: 106 Date: 02/03/2001 Location: Switchgear Room Duration of Arc Fault: 4 to 15 seconds Means of Extinguishment: Fire Brigade, Water Suppression Time: 31 minutes	Equipment: 4.16kV Switchgear Arc Fault Location: Breaker Safety Class: Non-1E Arc Electrode Material: Copper EDS Configuration: 8 Fault Zone: 1 Bin 16.b	During a unit start up following a refueling outage, at approximately 39% power, a breaker faulted for an unknown cause and started a fire within the breaker cubicle upon switching from the Reserve Auxiliary Transformer (RAT) to the Unit Auxiliary Transformer. Fire brigade members unsuccessfully attempted to suppress the ensuing fire with fire extinguishers. The fire was eventually suppressed using water. Ionized gases and smoke diffused through cable passages between adjacent cubicles and entered the RAT feeder breaker cubicle. The fire consumed much of the breakers nonmetallic parts and caused substantial melting of current carrying components. Five cabinets in the bus were replaced/rebuilt – including the replacement of electrical equipment and cables that were either burned directly or damaged by the fire.	The entire switchgear bus was damaged. The back cabinet wall was blown open. Three trays above the cabinet were damaged primarily due to the ensuing fire. The trays were located 0.6, 1.8, and 2.3 m (2, 6, and 7.5 ft) above the top of the cabinet. A front cabinet located 1.4 m (4.5 ft) away was also thermally damaged. Damage included doors, and protective relays. Smoke penetration and cleaning required in other cabinets Subdivision: HEAF
Incident Number: 112 Date: 08/03/2001 Location: Turbine Building Duration of Arc Fault: 4-15 seconds Means of Extinguishment: Fire Brigade Suppression Time: 90 minutes	Equipment: 4kV Switchgear Arc Fault Location: Breaker Safety Class: Non-1E Arc Electrode Material: Copper EDS Configuration: 8 Fault Zone: 1 Bin 16.b	During an orderly startup of Unit 1 following a reactor trip, at approximately 25% power, a breaker on a 4kV switchgear failed due to overheating of the primary disconnect assemblies. After approximately one and a half hours of the initial breaker failure, the fire was extinguished by the plant fire brigade with help from the local fire department.	The front of the cabinet was blown open. Several inches of the feed stabs were completely vaporized. An adjacent breaker was damage by the ensuing fire. Subdivision: HEAF

Table A-1 Summary of HEAFs in the U.S. Nuclear Power Industry 1979 through 2021 (cont.)

Event Information	Initiating Electrical Component	Summary of Event	Event Zone of Influence
Incident Number: 127 Date: 06/18/2004 Location: Yard: Main Transformer Low Voltage Bushing Box Duration of Arc Fault: 4 – 15 seconds Means of Extinguishment: Fire Brigade Suppression Time: 37 minutes	Equipment: 22 kV isophase bus duct Arc Fault Location: N/A Safety Class: Non-1E Arc Electrode Material: Aluminum EDS Configuration: 4 Fault Zone: IPBD Bin 16.2	Two-phase electrical fault-to-ground occurred on the 22 kV System. The “B” phase faulted to ground in the low voltage bushing box on top of the Main Transformer. “A” phase faulted to ground in the surge arrester cubicle of the Generator PT Cabinet through the “A” phase surge arrester "C" phase involved 400 ms later (arcing & ionization from "B" phase). The electrical grounds that initiated the event were cause by loose material in the “B” iso-phase bus duct as a result of the failed flexible connector that allows the iso-phase bus the thermally expand and contract.	Damage from this event was limited to major portions of the isophase bus and the low voltage Main Transformer bushings. There was no damage to the Main Transformer or to the Main Generator. Subdivision: HEAF
Incident Number: 10584 Date: 07/27/2008 Location: Cooling Towers Duration of Arc Fault: <2 seconds Means of Extinguishment: Self-extinguish Suppression Time: N/A	Equipment: 4 kV segmented bus duct Arc Fault Location: N/A Safety Class: Non-1E Arc Electrode Material: Aluminum EDS Configuration: 7 Fault Zone: BDSAT Bin 16.1-1	Operating at Mode 1 an arcing fault occurred on a 4 kV segmented bus duct. The fault was likely caused by a current overload of the of the flexible connections at the expansion joints.	Damage was identified as failed buswork between a cooling tower transformer and the cooling tower switchgear. Warping of the duct enclosure occurred. Subdivision: Arc Blast
Incident Number: 162 Date: 08/05/2009 Location: Turbine Building Duration of Arc Fault: 4 – 15 seconds Means of Extinguishment: Self-extinguish Suppression Time: 21 minutes	Equipment: 6.9 kV segmented bus duct Arc Fault Location: N/A Safety Class: Non-1E Arc Electrode Material: Aluminum EDS Configuration: 3 Fault Zone: BDUAT Bin 16.1-1	Operating at 100% power, and electrical fault occurred on a 6.9 kV non-segregated bus. Fault was likely caused by a relaxation of bolted connections on the center phase flexible link(s) caused by repeated thermal cycles over time. The root cause for this event was identified as a failure to perform preventative maintenance tasks for torque checks of non-segregated bus links.	The explosion melted and removed approximately 1.2 m (4 ft) of each of the three busses and 2.4 m (8 ft) of the bus duct. This bus duct hung at approximately 4.6 m (15 ft) above finished floor. The shrapnel (molten aluminum) and debris was thrown in the general vicinity. Subdivision: HEAF

Table A-1 Summary of HEAFs in the U.S. Nuclear Power Industry 1979 through 2021 (cont.)

Event Information	Initiating Electrical Component	Summary of Event	Event Zone of Influence
Incident Number: 50909 Date: 03/07/2010 Location: Yard Duration of Arc Fault: < 0.75 seconds Means of Extinguishment: Self-extinguish Suppression Time: N/A	Equipment: 13.8 kV segmented bus duct Arc Fault Location: N/A Safety Class: Non-1E Arc Electrode Material: Aluminum EDS Configuration: 8 Fault Zone: BD1 Bin 16.1-2	Operating at 100% power, and electrical fault occurred on a 13.8 kV non-segregated bus. The fault likely resulted from water intrusion possible from the cracking of bus bar polymer insulation due to environmental factors.	The internal buswork was damaged, and the external protective structure was distorted from the fault. A large hole in the middle of the backside of the Calvert bus enclosure (facing the turbine building), and a smaller hole facing south towards the Unit 1 Operations Support building (U1 OSB) were observed Subdivision: Arc Blast
Incident Number: 50910 Date: 03/28/2010 Location: Turbine Building Duration of Arc Fault: 20 and 180 seconds Means of Extinguishment: Fire Brigade Suppression Time: 39* minutes *The suppression time for the first event is estimated using the description of other actions taking place during the HEAF event. The effect this assumed time has on the suppression rate calculation is insignificant as if the suppression time was found to be 1 minute or 60 minutes the change in the suppression rate calculated in Section 5.4 would only change by ±0.001.	Equipment: 4kV Switchgear Arc Fault Location: Breaker Safety Class: Non-1E Arc Electrode Material: Copper EDS Configuration: 5 Fault Zone: 1 Bin 16.b	Operating in Mode 1 at 99.5% power, a feeder cable to a 4 kV non-vital bus experienced an arcing fault. There are two counted HEAFs associated with this event: 1) An initial fault on the 4 kV Bus 5 supply due to a failure in cable insulation. 2) A second fault on 4 kV Bus 4 caused by operators improperly resetting the main generator lockout relay with a trip signal still present and re-initiating a fault on the same breaker.	The initial fault caused electrical fires that damaged bus feeder cable above the Bus 5 switchgear. There was evidence of some thermal impact to ceiling approximately 5 feet above the switchgear and to the cables in a tray located approximately 3 to 5 feet horizontal from the location of the fault in the bus cable above Bus 5. The second arc flash breached the rear of the cubicle in Bus 4 and caused blast debris damage to surrounding components. Subdivision: HEAF

Table A-1 Summary of HEAFs in the U.S. Nuclear Power Industry 1979 through 2021 (cont.)

Event Information	Initiating Electrical Component	Summary of Event	Event Zone of Influence
Incident Number: 50926 Date: 02/12/2011 Location: Cooling Tower Switchgear Building Duration of Arc Fault: 12 seconds Means of Extinguishment: De-energized Suppression Time: 31 minutes	Equipment: 480V segmented bus duct Arc Fault Location: Safety Class: Non-1E Arc Electrode Material: Unknown EDS Configuration: 8 Fault Zone: BD2 Bin 16.1-2	Following refueling, in process of raising reactor power (at approximately 20%) an arcing fault occurred in a 480 V segmented bus duct. Significant damage to the bus limited a conclusive determination of the cause of the fault, however it was likely due to a relaxation of torque at the connection joint caused by repeated thermal cycles over time. Failure of lockout relay to trip circuit breaker extended fault duration. Main Control Room received a smoke detector alarm in Cooling Tower Switchgear Room. Fire Brigade was dispatched. The breaker feeding the faulted bus had to be manually tripped and the smoke dissipated following the de-energization of the bus.	Significant bus, cable, and switchgear damage. Subdivision: HEAF
Incident Number: 50935 Date: 06/07/2011 Location: Auxiliary Building Duration of Arc Fault: 41 seconds Means of Extinguishment: Automatic Halon System Suppression Time: N/A	Equipment: 480V Switchgear Arc Fault Location: Breaker Safety Class: 1E Arc Electrode Material: Copper and Aluminum EDS Configuration: 8 Fault Zone: 3 Bin 16.a	The plant was fully depressurized operating in Mode 5 during a refueling outage. An AC ground fault occurred in a load center. Most probable cause of the fault was high resistance connection on the line side of the load center circuit breaker cubicle. Automatic halon discharge suppressed the fire.	Catastrophic failure of the feeder breaker. Large quantity of soot and smoke was produced by the fire. Conductive smoke cause arcing between bus bars and island bus. Subdivision: HEAF
Incident Number: 51256 Date: 06/13/2013 Location: Reactor Building Duration of Arc Fault: 0.12 seconds Means of Extinguishment: Self-extinguish Suppression Time: N/A	Equipment: 13.8 kV Switchgear Arc Fault Location: Breaker Safety Class: Non-1E Arc Electrode Material: Copper EDS Configuration: 8 Fault Zone: 1 Bin N/A	Operating in Mode 4 at 0% power, an arcing fault occurred on a 13.8 kV feeder bus bar breaker. No conclusive evidence was developed pointing to a singular cause leading to the arcing fault. Equipment protective relay schemes operated as expected.	Damage was limited to the cubicle in which the fault initiated. Damaged components were replaced. Subdivision: Arc Flash

Table A-1 Summary of HEAFs in the U.S. Nuclear Power Industry 1979 through 2021 (cont.)

Event Information	Initiating Electrical Component	Summary of Event	Event Zone of Influence
Incident Number: 51194 Date: 07/03/2013 Location: Turbine Building Duration of Arc Fault: 0.75 seconds Means of Extinguishment: Self-extinguish Suppression Time: N/A	Equipment: 13.8 kV Bus in Source Cabinet Arc Fault Location: Manual Load Interrupt Switch (Load Section) Safety Class: Non-1E Arc Electrode Material: Copper EDS Configuration: 8 Fault Zone:1 Bin N/A	Operating at full power, an arcing fault on the disconnect bus bar into a cabinet blew the rear access door and shattered the front inspection window of the cabinet. The arcing fault was due to an un-insulated cable shield wire coming loose due to an age related failure of the plastic cable ties.	The cabinet containing the faulted bus bar was damaged consistent with a pressure event (bowed cabinet wall, rear door blown off, broken inspection window.) No damage to other equipment was damaged. A support bar located in the path of the rear inspection door that was blown off was damaged, but the adjacent cabinet was not damaged. No ensuring fire occurred. Subdivision: Arc Blast
Incident Number: 51199 Date: 07/26/2013 Location: Turbine Building Duration of Arc Fault: 10 seconds Means of Extinguishment: Fire Brigade Suppression Time: 29 minutes	Equipment: 25 kV iso-phase bus duct Arc Fault Location: N/A Safety Class: Non-1E Arc Electrode Material: Aluminum EDS Configuration: 8 Fault Zone: IPBD Bin 16.2	Operating at 100% power, an arcing fault occurred on the Unit Auxiliary Transformer iso-phase feed-through bushing and the main generator neutral connection box. The cause was electrical shorting caused by a failed cooling backdraft damper blade entering the bus duct. The fire brigade suppressed the ensuing fires within 30 minutes	Significant damage to bus duct. A small cable insulation and oil fire was ignited by the fault. Subdivision: HEAF
Incident Number: 51291 Date: 12/09/2013 Location: Turbine Building Duration of Arc Fault: ~6seconds Means of Extinguishment: Self-extinguish Suppression Time: N/A	Equipment: 6.9 kV segmented bus duct Arc Fault Location: N/A Safety Class: Non-1E Arc Electrode Material: Aluminum EDS Configuration: 3 Fault Zone: BDUAT Bin 16.1-1	Operating at in Mode 1, a failure in a fusible link attached to a 6.9 kV non-segregated bus duct resulted in a phase-to-ground arcing fault. The protective relays did not function properly (lifted trip logic leads) resulting in the catastrophic failure of the site Unit Auxiliary Transformer. The root cause of the fault is not conclusively know since the fusible link was vaporized during the fault, however it was likely caused by improper installation of the fusible links and subsequent degradation of the flex connections. The fire brigade suppressed the UAT fire with a foam suppression agent.	The fault in the 6.9 kV non-segregated bus blew out and caused a phase to phase fault in the 4.16 kV bus duct located directly below the 6.9 kV bus duct. The failure extended to and caused an exposition/fire in the site UAT. Subdivision: HEAF

Table A-1 Summary of HEAFs in the U.S. Nuclear Power Industry 1979 through 2021 (cont.)

Event Information	Initiating Electrical Component	Summary of Event	Event Zone of Influence
Incident Number: N/A Date: 02/07/2016 Location: Switchgear Area Duration of Arc Fault: 0.15 seconds Means of Extinguishment: Self-extinguish Suppression Time: N/A	Equipment: 4.16 kV Switchgear Arc Fault Location: Bus Bar Cable Safety Class: Non-1E Arc Electrode Material: Copper EDS Configuration: 3 Fault Zone: 1 Bin N/A	Operating at 88% power in Mode 1 during an end-of-cycle coast-down, a fault occurred in a 4.16 kV switchgear. The fault occurred where cable insulation was found to be degraded.	Evidence of an electrical explosion (cubicle door was deformed). No other damage. No ensuring fire occurred. Subdivision: Arc Blast
Incident Number: 51764 Date: 01/17/2017 Location: Yard Duration of Arc Fault: 1 second Means of Extinguishment: Self-extinguish Suppression Time: N/A	Equipment: 4.16 kV segmented bus duct Arc Fault Location: N/A Safety Class: Non-1E Arc Electrode Material: Aluminum EDS Configuration: 3 Fault Zone: BDSAT Bin 16.1-1	Operating at 100% power, an arcing fault occurred in a 4.16 kV non-segregated bus duct. The fault was likely due to a degradation of insulation. Following annunciation of transformer undervoltage, an operator reported discoloration and elevated temperatures (using thermal imaging) of the bus duct.	Damage was limited to tracking along the bus support insulators. No equipment outside the bus duct was damaged. Subdivision: HEAF
Incident Number: N/A Date: 03/18/2017 Location: Turbine Building Duration of Arc Fault: 0.6 seconds Means of Extinguishment: Self-extinguish Suppression Time: N/A	Equipment: 4 kV Switchgear Arc Fault Location: Main Bus Bar Safety Class: 1E Arc Electrode Material: Copper EDS Configuration: 2 Fault Zone: 1 Bin N/A	Arcing fault occurred on the current limiting reactor coil of a 4 kV switchgear. No flames were observed by initial responders. This event is notable in that a fire door credited as part of the fire barrier to an adjoining fire zone was found to have been damaged by the pressure wave caused by the blast.	Equipment damaged by this event was limited to the switchgear cubicle of origin. A worker who was inside the room during the event was injured and a fire door separating an adjacent fire zone was damaged. No ensuring fire occurred. Subdivision: Arc Blast

Table A-1 Summary of HEAFs in the U.S. Nuclear Power Industry 1979 through 2021 (cont.)

Event Information	Initiating Electrical Component	Summary of Event	Event Zone of Influence
Incident Number: 51765 Date: 12/16/2020 Location: Turbine Building/Reactor Aux Building Wall Penetration Duration of Arc Fault: 15 seconds Means of Extinguishment: Multicycle sprinkler suppression system Suppression Time: N/A	Equipment: 6.9 kV segmented bus duct Arc Fault Location: N/A Safety Class: Non-1E Arc Electrode Material: Aluminum EDS Configuration: 6 Fault Zone: BDUAT Bin 16.1-1	Operating at 100% power, an arcing fault occurred in a 6.9kV non-segregated bus duct powered from the UAT 1B X winding that was a penetration between the turbine building and reactor auxiliary building. Phase-to-phase fault was immediately detected by UAT differential protection initiating a main generator lockout and trip of the unit. Generator fed HEAF. Root Cause was an inadequate weather tight seal at bus duct penetration throat resulting in water intrusion and insulation degradation.	Significant damage to bus duct. Nearby cable tray was impacted by debris, soot, and slag. The tray was cleaned and inspected. No cables were electrically damaged, but cables with outer jacket damage from molten slag were repaired through splicing. Subdivision: HEAF

Table A-2
Fire Event Data

Fire ID	Event Data	Location	Ignition Source	Power Mode	Fire Severity	Bin Designation	NSP Category	Suppression Time
Old 434	08/02/1984	Plant-Wide Components	HEAF low-voltage electrical cabinet (480-1000 V)	Power Operation	CH	16.a	N/A	Excluded (Halon discharge)
Old 575	03/19/1987	Plant-Wide Components	Bus Duct	Power Operation	CH	16.1-1	HEAF	23
Old 922	07/10/1987	Plant-Wide Components	Bus Duct	Power Operation	CH	16.1-1	HEAF	3
Old 678	03/02/1988	Plant-Wide Components	Bus Duct	Power Operation	CH	16.1-1	N/A	Excluded (Self-extinguished)
Old 732	07/06/1988	Plant-Wide Components	HEAF medium-voltage electrical cabinet (>1000 V)	Power Operation	CH	16.b	HEAF	19
Old 947	01/03/1989	Plant-Wide Components	HEAF medium-voltage electrical cabinet (>1000 V)	Power Operation	CH	16.b	HEAF	46
Old 929	10/09/1989	Plant-Wide Components	Iso-phase Bus Duct	Power Operation	CH	16.2	HEAF	68
20284	10/14/1991	Plant-Wide Components	Transformers	Refueling	U	23[13]	Electrical	2
74	06/10/1995	Plant-Wide Components	HEAF medium-voltage electrical cabinet (>1000 V)	Power Operation	CH	16.b	HEAF	80
100	05/15/2000	Plant-Wide Components	Bus Duct	Power Operation	CH	16.1-1	HEAF	35
106	02/03/2001	Plant-Wide Components	HEAF medium-voltage electrical cabinet (>1000 V)	Power Operation	CH	16.b	HEAF	31
112	08/03/2001	Plant-Wide Components	HEAF medium-voltage electrical cabinet (>1000 V)	Power Operation	CH	16.b	HEAF	90
127	06/18/2004	Plant-Wide Components	Iso-phase Bus Duct	Power Operation	CH	16.2	HEAF	37
10584	07/27/2008	Plant-Wide Components	Bus Duct	Power Operation	CH	16.1-1	HEAF	N/A
162	08/05/2009	Plant-Wide Components	Bus Duct	Power Operation	CH	16.1-1	HEAF	21
50909	03/07/2010	Plant-Wide Components	Bus Duct	Power Operation	CH	16.1-2	HEAF	N/A
50910 Event 1	03/28/2010	Plant-Wide Components	HEAF medium-voltage electrical cabinet (>1000 V)	Power Operation	CH	16.b	HEAF	39
50910 Event 2	03/28/2010	Plant-Wide Components	HEAF medium-voltage electrical cabinet (>1000 V)	Shutdown	CH	16.b	HEAF	24

Table A-2
Fire Event Data (cont.)

Fire ID	Event Data	Location	Ignition Source	Power Mode	Fire Severity	Bin Designation	NSP Category	Suppression Time
50926	02/12/2011	Plant-Wide Components	Low Voltage Bus Duct	Power Operation	CH	16.1-2	HEAF	31
50935	06/07/2011	Plant-Wide Components	HEAF low-voltage electrical cabinet (480-1000 V)	Cold Shutdown	CH	16.a	N/A	Excluded (Halon discharge)
51199	07/26/2013	Plant-Wide Components	Iso-phase Bus Duct	Power Operation	CH	16.2	HEAF	29
51291	12/09/2013	Plant-Wide Components	Bus Duct	Power Operation	CH	16.1-1	HEAF	N/A
51764	01/17/2017	Plant-Wide Components	Bus Duct	Power Operation	CH	16.1-1	HEAF	N/A
51765	12/16/2020	Plant-Wide Components	Bus Duct	Power Operation	CH	16.1-1	HEAF	N/A (sprinkler activation)

[13] This was binned as a HEAF (16.b) in NUREG-2169. More details were received on this source, and it was determined that this is a dry transformer (and not switchgear).

APPENDIX B
DISPOSITION OF MOTOR CONTROL CENTERS

NUREG/CR-6850 Supplement 1 [2] (FAQ 06-0017) provided the following guidance on considering HEAFs for motor control centers (MCCs):

Only MCCs with switchgear that is used to directly operate equipment such as load centers should be counted as HEAF sources.

The working group concluded that the original intent of the statement was to differentiate between a MCC and a low voltage switchgear (defined as a load center). The term “load center” has not been consistently defined; historically it was a marketing term for a plug-in breaker. Similarly, some manufacturers have labeled a low voltage switchgear as a MCC. The definition of load centers throughout this report is that it is a low voltage switchgear where all supply and loads breakers are low voltage powered circuit breakers. It is the latter that are counted as bin 16.a HEAFs.

MCCs are commonly supplied for smaller 480Vac (and potentially 600Vac) loads where a combination molded case circuit breaker (MCCB), thermal overload (TOL), and a National Electrical Manufacturer’s Association (NEMA) motor starter (contactor) is housed in individual compartments frequently referred to as a “MCC bucket”. MCCs (and their buckets) are smaller, less expensive than load centers as load currents are significantly less than that of the upstream load center (e.g., smaller horsepower motors). MCCBs are for load and cable short circuit protection only and can only be manually switched locally as the NEMA motor starter/contactor is used to control motor stopping, starting, or reversing (e.g., MOV). In many cases, the power supply breaker to the MCC is a remote load center circuit breaker. The MCC may not have a supply breaker (e.g., for operator tagging clearance purposes, the MCC is isolated at the load center circuit breaker). Therefore, all other MCC breakers are typically MCCB’s with instantaneous settings.

In contrast, load centers are a form of switchgear utilized at the low voltage level (<1000Vac). Circuit breakers in load centers are referred to as low voltage power circuit breakers (LVPCB) and resemble and operate similar to medium voltage switchgear breakers. They can be remotely operated, have shunt trips, and have larger arc chutes to quench higher levels of fault current.

The control power arrangement for MCCs is different than that of load centers (low voltage switchgear). Load centers use separate, external DC power from the station batteries. MCC control power is self-powered. The MCC taps two of the three phases of the 480Vac power circuit and reduces the control voltage to 120Vac via a control power transformer (CPT). There have been a small number of MCCs identified in US NPPs that use a LVPCB for the MCC primary and alternate supply. These breakers are local and integral to the MCC. These breakers do not contain an instantaneous element for coordination purposes with the downstream load breakers. These MCCs are supplied from an intermediary load center and are

not directly supplied from the stepdown transformer, therefore they should be treated as MCCs and not load centers.

Arc faults have occurred in MCCs in US NPP operating experience; however, none have been observed at the severity of HEAFs in load centers or switchgear. There are likely many reasons for this such as:

1. Load MCCB instantaneous overcurrent (50) settings significantly limit fault energy
2. MCCBs do not require external control power to initiate overcurrent protection and are generally more reliable
3. Load MCCBs have two back up breakers (MCC supply and load center supply)
4. If a supply breaker exists in an MCC it has at least one back up breaker (load center breaker)
5. Less available fault energy at the entry level of MCCs.

The limited fault energy and design difference of MCCs compared to load centers (low voltage switchgear) are factors in the absence of MCC HEAFs. This is consistent with the guidance in NUREG/CR-6850 Supplement 1 [2] (FAQ 06-0017) to not include MCCs in the consideration as HEAF sources. Load centers (low voltage switchgear) as differentiated in the above discussion are considered HEAF sources.

APPENDIX C
EXPERT PANEL FOR MEDIUM VOLTAGE SWITCHGEAR HEAFS

C.1 Objective and Scope

Medium voltage switchgear HEAFs (Bin 16.b) in Zone 1 and Zone 2 of the EDS requires the use of expert judgement to establish certain scenario probabilities. The HEAF events corresponding to Zones 1 and 2 are initially examined together for this expert judgement activity. During the HEAF operating experience review, the working group decided that the majority of events occurred in Zone 1 (see explanation and basis in Section 5.2.2.1) and assigned the ignition frequency to Zone 1 and Zone 2 based strictly on operating experience (86% for Zone 1, 14% in Zone 2). Contrary to NUREG/CR-6850, switchgear are no longer counted by vertical section, instead they are counted by switchgear bank (see explanation and basis in Section 5.2.2.2). To determine the probabilities of HEAFs within the switchgear bank, an expert judgment process is used to determine the end state likelihood. Expert judgment is used to define the split fractions where the HEAF is likely to occur within the switchgear and the corresponding ZOI. The concepts, expert panel input, discussion, and results are described further in this appendix.

C.2 Expert Panel Composition

The expert panel consisted of experts in PRA, fire, and electrical engineers. The working group members who supported the expert panel are as follows:

- T. Dinh, NRC-NRR
- K. Fleischer, Retired NextEra
- J.S. Hyslop, NRC-NRR
- D. Lovelace, Jensen Hughes
- P. S. Lovvorn, TVA
- A. Lindeman, EPRI
- N. Melly, NRC-RES
- G. Taylor, NRC-RES

C.3 Expert Panel Input

On the October 7, 2020, PRA method subgroup call, the working group decided to obtain expert input to determine the likelihood of HEAFs within the switchgear bank. Prior to this call, event trees were developed describing the possible HEAF end states for Zone 1 and Zone 2 MV switchgear. An excel sheet was sent out, see Figure C-1, for experts to document the numbers and basis assigned for both the vertical section and ZOI event tree headings.

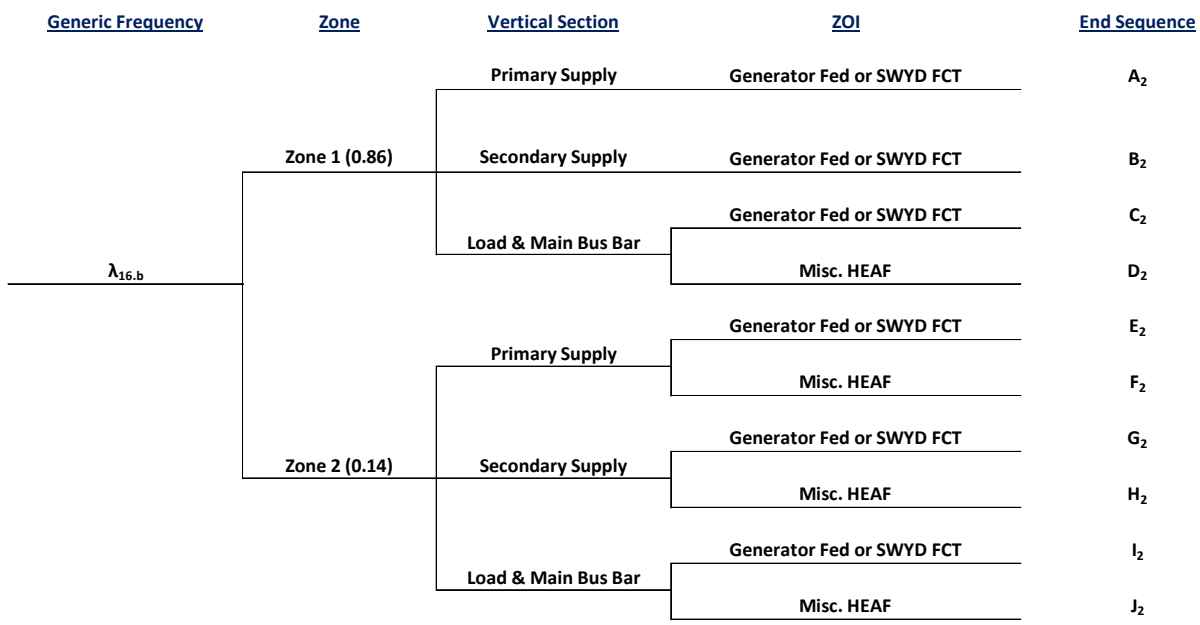

Figure C-1
Initial Event Tree Sent out for Working Group Expert Panel

C.4 First Panel Meeting

On October 14, 2020, the PRA method subgroup met to discuss each member's input and basis. Each working group member supporting the expert panel was requested to fill out the event tree in Figure C-1 and a basis for their estimates. Table C-1 reports the initial numbers provided by each working group member. Table C-2 provides additional documentation for the numbers reported.

Table C-1
Initial Input Received from Working Group Members

Top Event or End State	WGM #1	WGM #2	WGM #3	WGM #4	WGM #5	WGM #6	WGM #7	WGM #8
Vertical section in Zone 1	0.6/0.2/0.2*	0.8/0.2*	0.9/0.1*	0.567/0.283/0.15*	0.75/0.25	0.57/0.29/0.14*	0.8/0.2*	0.85/0.15*
Power transformer / SBL (Zone 1)	0.25/0.75	Not provided	0.1/0.9	0.0525/0.9475	Not provided	Not provided	0.1/0.9	0.667/.333
End State A	0.6 or 0.2	Not calculated	Not calculated	0.567	Not calculated	0.57	0.4	0.425
End State B	0.2 or 0.6	Not calculated	Not calculated	0.283	Not calculated	0.29	0.4	0.425
End State C	0.05	Not calculated	0.01	0.008	Not calculated	0.014	0.02	0.1
End State D	0.15	Not calculated	0.09	0.14	Not calculated	0.126	0.18	0.05
Vertical section in Zone 2	0.4/0.4/0.2	0.8/0.2*	0.9/0.1*	0.567/0.283/0.15*	0.75/0.25	0.45/0.45/0.1	0.8/0.2*	0.85/0.15*
Power transformer / SBL (Zone 2)	0.025/0.975 and 0/1.0	Not provided	Not provided	0.0275/0.9725	Not provided	0.01/.99	0.03/0.97	0.5/0.5 and 0.333/0.667
End State E	0.01	Not calculated	Not calculated	0.016	Not calculated	0.0045	0.012	0.2125
End State F	0.39	Not calculated	Not calculated	0.55	Not calculated	0.4455	0.388	0.2125
End State G	0.01	Not calculated	Not calculated	0.008	Not calculated	0.0045	0.012	0.2125
End State H	0.39	Not calculated	Not calculated	0.28	Not calculated	0.4455	0.388	0.2125
End State I	0	Not calculated	Not calculated	0.004	Not calculated	0.001	0.006	0.05
End State J	0.2	Not calculated	Not calculated	0.15	Not calculated	0.099	0.194	0.1
Notes	*Primary supply gets larger frequency	*Primary feed gets the supply frequency	*Primary feed gets the supply frequency	*Primary supply gets larger frequency	The supply split is determined by the plant specific feed (UAT or SAT)	*UAT/SAT/Load split based on OPEX	*Supply split evenly	*Supply split evenly

Table C-2
Basis for Input Provided in Table C-1

Expert	Portion of event tree	Basis or explanation
WG #1	General	Zone 1 end states should be different based on the normal supply or feed to the switchgear. If supplied from the SAT, there should be a higher fraction of fires assigned to the SAT (but the UAT side should also see a fraction of fires to account for switching alignments). Likewise, if normally supplied by the UAT the opposite is true. So, I made two splits (one based on UAT normally aligned and one based on SAT normally aligned). This concept allows the methodology to account for actual plant line ups as noted in the EPRI EDS HEAF whitepaper (a design fed off the SAT is less likely to see a generator fed fault). Most of Zone 1 experience is likely to be in the supply cubicle due to switching, past operating experience, and in some cases single point vulnerabilities.
	Zone 1 - Normally supplied by UAT	End state A (Generator fed fault): 0.6 (Qualitative ranking: highest; one breaker away from generator fed fault) End state B (FCT duration): 0.2 (Qualitative ranking: high; one breaker away from SAT fault) End states C & D: Load vertical section: 0.2 (remainder of vertical section to sum to 1), ZOI split fraction (0.25 Gen Fed/FCT duration / 0.75 SBL) End State C: 0.05 (Qualitative ranking: low; 2 breakers away from generator fed fault) End State D: 0.15 (Qualitative ranking: medium; fault can occur in main bus bar, which would require supply breaker to interrupt)
	Zone 1 - Normally supplied by SAT	Same as above except that SAT supply: 0.6 and UAT supply 0.2. End States C and D are same.
	Zone 2	End state E: 0.01 (Zone 2 supply fault interrupted by Zone 1 - 2 (possibly 3) breakers away from gen fed fault End state F: 0.39 (Zone 2 SBL) End state G: 0.01 End state H: 0.39 End state I: 0 (unlikely to see a generator fed fault this far down in Zone 2) End state J: 0.2

Table C-2 Basis for Input Provided in Table C-1 (cont.)

Expert	Portion of event tree	Basis or explanation
WG #2	General	Assumptions: Still splitting frequency by bank Using Bayes with a non-informed approach and OPEX data result in similar estimates. Rounded for convenience.
	Zone 1 and Zone 2 Supply	Supply (including both UAT and SAT): 80% Loads: 20% Modified event tree because I do not feel that we should specify the fraction of frequency that goes to the specific supply. Leave that up to the plant. If their normal configuration is powered from the SAT, then the frequency goes there. If there is some split between the SAT/UAT or if we need to account for fast transfer failures, then we could specify the method to address. I don't see much value in assigning x% of frequency to supply a component that is not operational for the majority of the time.
WG #3	General	1. Agree with WG #2 idea of treatment of UAT/SAT on vertical section top event. 3. 90/10 split reflects strong preference for supply overload for vertical section top event. Based on earlier discussions, feel like expert judgment should be sorted into very high likelihood, very low likelihood, or really uncertain. 4. Unsure about Zone 2 ZOI split. Working group is split on event characterization with respect to duration for Zone 2. 5. For Zone 1 ZOI split, according to discussions, SBL for load is very dominant and I have assigned it very high likelihood. 6. My understanding is that Generator Fed or FCT duration means large HEAF; SBL means small HEAF.
	Vertical Section Top Event	Supply (including both UAT and SAT): 90% Loads: 10%
	ZOI Top Event	ZOI branch between C and D is 10% Generator Fed or SWYD FCT, and 90% short duration
WG #4	General	Duration discussion: I would like to see the working group, for now, limit the ZOI end states to either short duration (breach up to something like 4 seconds) and long duration (bolted fault current greater than 4 seconds). Until we see the ZOIs, we really do not know the practical usefulness of breaking up ZOIs any more than this. Once the ZOI information is available, then we could make better judgments about the usefulness of different ZOI end states. I think the FCT duration and SBL terminology is creating confusion. If we are distinguishing between generator fed and SAT FCT duration and SBL, then wouldn't the load branch need three ZOI end states?

Table C-2 Basis for Input Provided in Table C-1 (cont.)

Expert	Portion of event tree	Basis or explanation
WG#4	Vertical Section Top Event (applicable for Zone 1 and 2)	Supply (UAT): 56.67%; Assuming this is the normal supply. The normal supply breaker should get more frequency than the alternate. The HEAF frequency for switchgear supply breakers is largely dependent on the breaker operations. The switchgear is likely to be taken out of service without transferring to alternate for maintenance. This configuration change would operate the normal supply breaker without operating the alternate supply breaker. My engineering judgement is a 2:1 split. Using an 85% supply to 15% load split, the normal supply is given 0.85*2/3 for the frequency split. NOTE: It should be noted that this event tree is an example for Zone 2 with a normal from the UAT and a single alternate from the SAT. If there are more or less supplies, the frequency must be apportioned accordingly. Supply (SAT): 28.33%; Assuming this is the alternate supply. The normal supply breaker should get more frequency than the alternate. The HEAF frequency for switchgear supply breakers is largely dependent on the breaker operations. The switchgear is likely to be taken out of service without transferring to alternate for maintenance. This configuration change would operate the normal supply breaker without operating the alternate supply breaker. My engineering judgement is a 2:1 split. Using an 85% supply to 15% load split, the alternate supply is given 0.85*1/3 for the frequency split. Loads: 15%; The HEAF OPEX is dominated by supply breaker events. Using an 85% supply to 15% load split based on OPEX and engineering judgment.
	ZOI Top Event (End states C & D)	Zone 1 loads - generator fed: 5.25%; In order for the downstream breaker to experience a long duration HEAF, the upstream breaker must fail to interrupt the fault fast enough to prevent the long duration HEAF. The upstream breaker is typically set higher than the downstream breaker to achieve proper selective coordination and therefore, does not provide 100% redundant protection. Thus, the likelihood is not solely limited to the breaker random failure probability. The delay time for the supply breaker to trip if the load breaker fails is difficult to predict and depends on multiple factors: 1. Supply breaker protection available - Many utilities have board differential protection. This protection looks at the current flowing into a board should equal the summation of all the currents flowing out of the board. If a switchgear has board differential protection and that protection is not failed by the fault or by random failure, the fault would be interrupted very quickly (cycles) and there would be no HEAF. For cases where board differential is successful, those events are already excluded from the base HEAF frequency. Therefore, the board differential protection availability is not considered further here. It is assumed that faults within the board differential protection, where available, do not produce a HEAF end state. Therefore, the supply breaker protection that is being relied upon here is the 50 instantaneous and/or 51 (time overcurrent) where available. So, the

Table C-2 Basis for Input Provided in Table C-1 (cont.)

Expert	Portion of event tree	Basis or explanation
WG #4	ZOI Top Event (End states C & D) (continued)	first consideration is the load breaker may have a 50 and 51 trip device, but the supply breaker may not have a 50 trip device and only 51 protection. If the supply breaker has both 50 and 51 protection, the likelihood of a long duration HEAF, in theory, would be lower. The factors below assume only a 51 device is available on the upstream breaker. *Supply breaker protection settings - The 51 trip protection setting is set higher than the load breakers to achieve proper selective coordination. How low the supply breaker protection can be set is limited by the clearing time of the load protection device and a safety margin or it may be limited by the need to start and accelerate the largest connected load on top of the board running load so that there are not spurious trips of the supply breaker. For the time delta comparison between the supply and the larger loads, a time delay of 2-3 seconds for a bolted fault can be expected based on sample reviews. It is expected that available supply breaker protection would prevent a long duration HEAF unless there is a non-optimal setting for the supply breaker protection or significantly different shaped curves where faults of different impedance might have more significant delays. Engineering judgment used to establish this factor at 2.5%. 2. Failure of the supply breaker protection = random failure 0.25% [NUREG/CR-6928, Table 5-13] + HEAF induced failure 2.5% [engineering judgment] = 2.75% Zone 1 loads - SBL: 94.75% ; The load breaker SBL is assigned the remainder of the frequency that is not attributed to the long duration.
	ZOI top event (Zone 2 end states)	Top branch (representing generator fed, FCT duration type faults): 2.75%; In order for the downstream breaker to experience a long duration HEAF, the upstream breaker must fail to interrupt the fault fast enough to prevent the long duration HEAF. The upstream breaker is typically set higher than the downstream breaker to achieve proper selective coordination and therefore, does not provide 100% redundant protection. Thus, the likelihood is not solely limited to the breaker random failure probability. The delay time for the supply breaker to trip if the load breaker fails is difficult to predict and depends on multiple factors: 1. Supply breaker protection available - Many utilities have Board differential protection. This protection looks at the current flowing into a board should equal the summation of all the currents flowing out of the Board. If a switchgear has board differential protection and that protection is not failed by the fault or by random failure, the fault would be interrupted very quickly (cycles) and there would be no HEAF. For cases where Board differential is successful, those events are already excluded from the base HEAF frequency. Therefore, the board differential protection availability is not considered further here. It is assumed that faults within the board differential protection, where available, do not produce a HEAF end state. Therefore, the supply

Table C-2 Basis for Input Provided in Table C-1 (cont.)

Expert	Portion of event tree	Basis or explanation
WG #4	ZOI top event (Zone 2 end states) (continued)	breaker protection that is being relied upon here is the 50 instantaneous and/or 51 (time overcurrent) where available. So, the first consideration is the load breaker may have a 50 and 51 trip device, but the supply breaker may not have a 50 trip device and only 51 protection. If the supply breaker has both 50 and 51 protection, the likelihood of a long duration HEAF, in theory, would be lower. The factors below assume only a 51 device is available on the upstream breaker. *Supply breaker protection settings - The 51 trip protection setting will be set higher than the load breakers to achieve proper selective coordination. How low the supply breaker protection can be set is limited by the clearing time of the load protection device and a safety margin or it may be limited by the need to start and accelerate the largest connected load on top of the board running load so that there are not spurious trips of the supply breaker. For the time delta comparison between the supply and the larger loads, a time delay of 2-3 seconds for a bolted fault can be expected based on sample reviews. It is expected that available supply breaker protection would prevent a long duration HEAF unless there is a non-optimal setting for the supply breaker protection or significantly different shaped curves where faults of different impedance might have more significant delays. Engineering judgement used to establish this factor at 2.5%. 2. Failure of the supply breaker protection = random failure 0.25% [NUREG 6928, Table 5-13]. NOTE: HEAF induced failure not included as there is an upstream breaker in Zone 2 not influenced by the Zone 3 HEAF = 0.25% Estimate = 2.5% + 0.25% = 2.75% Bottom branch (representing short duration faults): 97.25% ; The load breaker short duration is assigned the remainder of the frequency that is not attributed to the long duration.
WG #5	General	I recommend apportioning the Supply/Load frequency in a 75/25 split because we have so little data. Usually when we have extremely small data sets, we use a uniform distribution. That would mean a 50/50 split. But we have expert opinion and some data that says the supply cabinet is more likely to have a HEAF. So, I moved to a 75/25 split. I'm uncomfortable with more 'precision' because the data set is so small, a new HEAF will skew things a lot. The supply split will be determined by the plant specific feed type (UAT or SAT).
	General	1.) Use of OE and EDS system protection considered (Note: differential (87) not credited as these would screen out as HEAFs due to rapid operation of circuit breaker fault clearing). 2.) Zone of switchgear is selected based on its normal EDS alignment during station operations 3.) Loads should be expanded to "MBB & Loads"

Table C-2 Basis for Input Provided in Table C-1 (cont.)

Expert	Portion of event tree	Basis or explanation
WG #6	Vertical Section (Zone 1)	Supply (UAT): 57% ; 4 events were UAT fed EDS alignments / 7 total MV SWGR events = 57% Supply (SAT): 29% ; 2 events were on SAT EDS alignments / 7 total MV SWGR events = 29% [2nd FEDB 732 event] (original/normal alignment was Zone 2, FEDB 50910 2nd event: HEAF fault location transferred from original "normal" alignment Zone 2 (Bus 5) to Zone 1 (Bus 4: Bkr 52/54) MBB & Loads: 14% ; 1/7 main bus bars (1st FEDB 732 event)
	Vertical Section (Zone 2)	Supply (UAT): 45%; even split between UAT/SAT. A fault can originate equally on any bus supply breaker regardless of zone. Supply (SAT): 45%; MBB & Loads: 10%; No OE supports MBB fault on Zone 2 switchgear. However, it did on Zone 1 switchgear and Mfg./model/construction similarities can be used a 90/10 split between supply and load
	ZOI (same for both Zone 1 and Zone 2)	Generator Fed/FCT: 1% Short Duration: 99% ; short duration should be reserved where an upstream bus supply circuit breaker must be credited as a "backup" and can take nominally 2 to 3 seconds to clear a downstream fault on the main bus bars or backup to a failed load circuit breaker. **Takes 2 protective layer failures: No OE supports two independent circuit breaker/scheme failures, FEDB 50910 backup protection operated "twice" and a total of 6 successful circuit breaker operation demands. Based on electrical distribution system protection scheme reliability and supporting Reactor Operating Years, split fraction should be heavily favored towards "Short Duration", around 99/1% split.

Table C-2 Basis for Input Provided in Table C-1 (cont.)

Expert	Portion of event tree	Basis or explanation
WG #6	Notes on end sequences in Zone 2	E_2, G_2, I_2: Initially considered circuit breaker reliability and show it screens below 1E-06. However, the number is too high (3E-02) to have two independent circuit breaker failures below 1E-06. However, out of all the US Nuclear Reactor operating hours, there has been no documented double circuit breaker failures that resulted in a HEAF. 7 MV SWGR HEAFs are single circuit breaker failures (except FEDB 732 where no circuit breaker failures occurred (two independent circuit breakers operated successfully). The circuit breaker failure probability seems too high. The circuit breaker reliability should be based on circuit breaker failures that caused a HEAF (fail to open only, not close) With no double circuit breaker failure HEAFs, the split fraction should weigh heavily in the "Short Duration" end sequence. Some reasons for this: o) 4 MV SWGR Generator Fed Faults were bus transfer events which included the successful operation of other circuit breakers o) FEDB 732, no circuit breaker failures. 2 independent circuit breakers operated successfully o) FEDB 50910 was a failure at a system level that placed a 6 demands on 3 circuit breakers that all operated successfully (other than circuit breaker 52/24 which was a latent/passive failure), no other circuit breakers failed to operate when demanded (open/close) -) First event circuit breakers that operated successfully: --)Three circuit breakers (52/20 (open), 52/7 (open), 52/19 (close) operated successfully as part of the bus transfer ---) Circuit breaker 52/19 operated twice (closed, then opened to clear fault) -) Second Event: Consequences of Generator Lockout (86) relay ---)Circuit Breaker 52/19 again successfully closes, then opens to clear the fault Note that circuit breaker 52/19 operated four times within a matter of four hours, with 2 of those being fault clearing demands (including "close & latch"). In other words, the "back up" protection worked twice (52/19).

Table C-2 Basis for Input Provided in Table C-1 (cont.)

Expert	Portion of event tree	Basis or explanation
WG #6	Supplemental Notes	Short Duration: If we haven't defined this (and we're going to adopt), then we should consider o) Load (Zone 1 or Zone 2): One level of protection failure (load circuit breaker fails) and the bus supply circuit breaker successfully (w/no instantaneous (50) element) operates as a backup, but still result in a "short duration" [Not supported by any OE] o) Bus "supply" circuit breaker works as designed (clears the fault, no protection failure) but because it has no instantaneous element (50) it does not clear instantaneously and may result in a "short duration" HEAF -) Marginally supported by FEDB 732 (2nd Event). A circuit breaker was closed in on a pre-existing fault requiring the circuit breaker: a) forward motion to close and latch b) Sense the fault: No instantaneous (50) element, so there is going to be a delay depending where the inverse-time current relay is set. c) reverse operation and re-open to clear the fault Short duration is what is reasonably expected for selectively coordinated EDS Zone 1/Zone 2 (Range: 2 to 3 seconds (or less)) Class 1E vs Non-Class 1E Class 1E vs non Class 1E: Given OE and oversight of the 1E over non-1E, the frequencies should be different (higher for non-1E). It may be appropriate for the Practitioner to have a decision path that is for either Class 1E or non-Class 1E (Zone 2 (UAT & SAT) and Zone 2 (UAT & SAT))
WG #7	Vertical Section top event	Utilizing the OPEX events that have occurred in the supply sections versus load section to inform the 80/20 split. In order for the arc flash to raise to the level of a HEAF it requires a delay in the supply breaker from tripping for faults on the main bus bar or at the load breaker, for faults downstream of the load breaker it requires a failure of that breaker and then is dependent on the tripping time of the supply breaker. The tripping time for the supply breaker in cases of faults vary between plants, with some being quick enough to not raise to the level of a HEAF.
	Zone 1 - ZOI split	The 90/10 split is derived from the events in understanding that a generator fed event is unlikely, but plausible. For cases where a fault is initiated at the load breaker or main bus bar, then it would require a failure of the supply breaker to trip. This would correspond closer to the breaker failure probability, however there is a chance that the HEAF may prevent the breaker from working by damaging control circuitry or other common causes. Therefore, the split is set at an order of magnitude higher than the common cause failure (CCF) for MV SWGR breakers failing to operate on demand.

Table C-2 Basis for Input Provided in Table C-1 (cont.)

Expert	Portion of event tree	Basis or explanation
	Zone 2 - ZOI split	The 97/03 split is derived from the from the CCF of MV SWGR breakers failing to operate on demand. In order to have a generator fed HEAF at the Zone 2 level, both breakers in the Zone 1 switchgear and possibly any breakers in the Zone 2 switchgear are required to fail. There is independence in the breakers in Zone 1 from the initiating event of the arc fault, however, there maybe be some common cause characteristics between the switchgear from a random failure standpoint therefore the split of 97/03 is applied instead of the split of 99.75/0.25.
WG #8	General	1) Supply UAT and SAT equally likely noting the prevalence for the arc to initiate during switching 85/15 2) ""Short duration"" faults must still comport with initiating frequency definitions- suggest duration be in excess of 2 sec or we consider setting a minimum energy level corresponding with short duration. These events will have a limited potential to damage targets external to the initiating component unless targets are close. 3) I have no strong physical evidence to create a basis for the generator fed vs. short duration faults for zone 2. The frequency value of 22% was based on operating experience for a high energy long duration fault (not necessarily generator fed i.e., FEDB 50910, however the energy output would fall into the same classification as a generator fed event. There still was some uncertainty on the zone 2 nature of the FEDB 50910 event as well as the total energy output so i adjusted the split between a true generator fed event and the short duration event on a 50/50 split. I don't think skewing the consequence towards non-consequential events based on breaker alignments or breaker failure probability is justified based on the initiating frequency. If there are truly short duration events that do occur at the Zone 2 which are impacted by breakers, they will be binned as arc flash events and appropriately put into bin 15. In my opinion if there is an argument to make an aggressive zone 2 adjustment to short duration non-consequential events there would be an equal argument to put all frequency of a HEAF into zone 1 to begin with. "
	Vertical Section split in Zone 1	Supply UAT and SAT equally likely (85/2 = 42.5) noting the prevalence for the arc to initiate during switching.

C.4.1 Summary of Discussion from 10/14/2020 Call

The meeting started out with a discussion of the definition of SBL HEAFs (as opposed to long duration generator fed HEAFs which have been well defined). This discussion helped calibrate the working group to a similar definition for non-generator fed HEAF events. WG #7 discussed the time duration would be anywhere between 0.5 through 3 to 4 second events at bolted fault conditions. The FEDB 732 event was roughly 1.15 seconds. Events that are longer than this (e.g., 2 to 3 seconds) would have larger ZOIs. WG #4 brought up the point about the difference between short duration faults and faults fed off the SAT. WG #7 pointed out that approximately

10 unit's SATs have fault clearing times in excess of 4 seconds per EPRI survey results. WG #8 states that the generator fed faults are likely to have consequences similar to the FEDB 112 OPEX and potentially HEAFs with aluminum can be larger in ZOI. SWGR fed off the SAT can be either shorter or longer duration (more closely resembling generator fed faults). Working group agreed that we need to better define short duration HEAFs such that everyone is working off the same definition. The working group also agreed that this discussion may have to be re-evaluated once we know more about the threshold of when an exothermic aluminum reaction occurs and the size of ZOIs at different durations and/or currents.

Next discussion moved to the event tree for medium voltage switchgear (see Figure C-1 Initial event tree sent out for working group expert panel). WG #8 asked about the lower range of the misc. duration, 0.5 seconds. WG #7 said this represented a cabinet breach from an arc – cabinet breach occurs between 0.5 and 0.6 seconds into the event, based on watching the videos from the full-scale testing. WG #1 stated that Bin 16 is to capture the higher consequence HEAF events, and some Bin 15 events may have cabinet breach, but not raising to the level of HEAF (arc blast/flash with secondary ensuing fire). WG#7 clarified this is not the door opening, but breach by burning through the cabinet from the arc. Working group agreed to revisit the threshold for the lower end of the HEAF range.

At this point the working group went back to the table of values from each member's input. WG #7 presented the results at a high level (see Table C-1) and noted that the estimates from each member were pretty similar. WG #1 had a higher estimated than most working group members for end state C (generator fed fault in Zone 1 load cubicle). WG #1 said this was based on definition of small HEAFs and the difficulty defining those events. WG #6 clarified to get to a generator fed fault in end state C requires failure of the load breaker to clear the fault and the supply breaker fails to clear the fault (or fault can occur in main bus bar or breaker stabs). WG #1 said based on the team discussion the estimate will shift to a higher probability to end state D.

Discussion of individual estimates and rationale

WG#1: Started doing numbers and determined that one number would not be generic for all the plants due to differences in normal alignment (either fed from SAT or UAT). Assumed two sources with each receiving 20% of the frequency and then applied an additional 40% to normal alignment (normal alignment had 60% of frequency, alternate had 20%). Supply breakers for Zone 1 (either UAT/SAT) could be single point vulnerabilities and therefore since only one failure has to occur, this is more likely. Having a generator fed fault in the load sections was the least likely scenario, so assigned that 5%. Would like better understanding of plants that have SWGR fed from the SAT, how often are they aligned to the UAT (and susceptible to a generator fed fault). In Zone 2, had hard time imagining what these faults would be like, but relied on OPEX, and most likely to see misc. duration faults in this zone. Assigned 1% for generator fed / FCT faults in the zone 2 supply (end states E and G) and 0 for the load (end state I).

WG#2: Assigned 80% of the zone 1 frequency amongst the supply sections. Proposed that of the 80% it could be split up based on plant configurations. Perhaps 30% (15% UAT / 15% SAT) of the 80% is predetermined by the methodology and the remainder of the 50% is up to the plant based on their electrical lineups based on past historical data.

> WG #4 states that it might not matter the alignments, but how much switching you do. Does the plant switch between the normal and alternate supply? Or just the normal? How often?
>
> WG#2: Do we know when the HEAFs occurred? If during switching? 3 of 4 bus transfer events were during standard routine operations switching buses from SAT to UAT during

power ascension. Fourth event during grid transient in switchyard (occurred during unsupervised bus transfer).

WG#6: There is switching of SAT breakers during operation (e.g., during diesel generator surveillance). Also, after the FEDB 74 event, INPO put out INPO SER 19-95 [30], to recommend against unsupervised bus transfer schemes. Unsupervised means simultaneous trip of the UAT breaker and simultaneous close of the SAT breaker. Since the breaker will open faster than the closing breaker, this inherently provides the appropriate dead time so there is not two sources on the bus at the same time. This works most of the time, but in the FEDB 74 event it didn't. INPO recommended supervised bus transfers which means synch check relays or early B contact (motion is in place and on the way to successful opening).

WG#4: Tried to think through Zone 2 load breaker scenarios and to get a generator fed fault, the fault must not detected be by the supply breaker. Supply breaker can randomly fail, but the HEAF itself in the load breaker compartment could render supply breaker inoperable due to collateral damage from load breaker compartment. Supply breaker is not redundant to load breaker (has to be set higher), so there is some potential for supply breaker to not interrupt quickly enough. Given we haven't seen long duration fault in a load breaker and random breaker failure probability was too generous, introduced a factor for Zone 2 supply where the breaker doesn't open either due to non-optimal settings or collateral damage. Put this factor as 2.5% (low but not impossible) – also 10 times more likely than random.

WG#7: Similar thinking as WG#4 in Zone 2. Medium voltage breaker failure probabilities for internal events are on the order of a low E-03 and the common cause occurrence factors for failure to open are on the order of a low E-02. These probabilities rely on failures independent of the fire. For HEAFs occurring at the Zone 3 level there is at least one breaker (can be two) independent of the HEAF initiating switchgear to prevent it from being a long duration generator fed HEAF. General review of OPEX shows that the majority of switchgear HEAFs initiate at the breakers, so there exists a possible common cause concern with the breaker failure mechanism that initiated the HEAF at the Zone 3 level and the independent breaker in the Zone 2 supply switchgear (similar switchgear model, maintenance, etc.). A one order of magnitude adjustment was applied to the independent breaker failure probability and the factor of 3% was determined as the split. For HEAFs initiating with in load vertical sections at the Zone 2 level there is a potential (unlikely due to general switchgear design, but still plausible) for the supply breaker in this switchgear to fail to trip due to damaging control circuitry or other common causes during the time delay characteristic of the overcurrent relays. The factor of 10% was determined for the split, this was judged based on the likelihood being higher than the value determined for Zone 3.

The group then discussed the two HEAFs at FEDB 50910 and the power flow alignments and the implications on the event tree and types of HEAFs occurring in Zone 1/Zone 2.

C.5 Second Panel Meeting

On October 21, 2020, the subgroup met to continue discussion on the definition of the miscellaneous / short HEAF (later renamed supply breaker limited (SBL)) durations to ensure a common understanding between the working group. A summary of the discussion is below:

WG#8: Questioned the working group on the difference between generator fed and short duration HEAFs. Is this short duration HEAF non-consequential? Need more definition on End State D.

WG#7: Modelers and testing should feed in insights to the definition of short duration/misc. HEAFs. Misc. means HEAFs not directly fed from either SAT or UAT. Somewhere between FEDB 732 and FEDB 50910 event.

WG#6: Looked at time-current-characteristic (TCC) curves, given a fault in first breaker, how long does it take for second breaker to interrupt fault. Range was between one to three seconds per the plants sampled. Used values of bolted faults and at 65%, 75%, and 85% of bolted fault. OPEX that is not generator fed are instances where the bus supply breaker has to interrupt, and this may take some time because it does not have an instantaneous element (0.8 -2.4 seconds). Where you have to rely on a backup breaker (primary fails) the timing is more like 0.2 to 5 seconds. There is going to be some overlap.

WG#8: FEDB 50910 fault was not a generator fed event but was longer than 1-4 seconds. Need to keep this in mind when we give these parameters to the modelers for ZOI.

WG#7: 80% of the plants will likely be in the 2-3 second range. There may be a few outliers with non-optimal settings or poor coordination.

WG#1: May have to iterate once we finalize miscellaneous HEAF duration to make sure the frequency and consequences (from the model) are what is intended. Miscellaneous HEAF may be represented as a distribution since the durations, currents, and energies may all be different.

WG#8: Need to make sure we are properly treating the difference between Bin 15 (thermal fires) and Bin 16 (HEAFs). Bin 16 is HEAF is potential to damage external targets at time 0. Lower threshold is FEDB 732 at 1.15 seconds for HEAF bin. This had melted holes in the cabinet.

WG#6: Discussed differences in non-class 1E and Class 1E switchgear, such as daily surveillance for DC control power.

Action: EPRI to send out definition of short / miscellaneous duration HEAFs to working group to ensure consistent definition within the working group. This is reproduced below in Table C-3.

Table C-3
ZOI Definition and Durations in MV Switchgear

HEAF Description	Duration*	End State Name
SAT or UAT alignment 1. Bus supply (cross-tie) primary protection works OR 2. Primary protection fails; however, next level upstream bus supply (or cross-tie) circuit breaker operates to clear the fault**	0.8 to 4.5 seconds	MISC HEAF [formerly: short duration]

Table C-3 ZOI Definition and Durations in MV Switchgear (cont.)

HEAF Description	Duration*	End State Name
SAT alignment only: Protection failure requiring reliance upon the SAT switchyard transformer backup time overcurrent (51) protection to clear the fault 1. Zone 1: 1 breaker fails 2. Zone 2: 2 breakers fail	0.8 to 5 seconds	Backup SWYD FCT [formerly: FCT Duration]
Generator fed faults: 1. Zone 1: 1 breaker fails 2. Zone 2: 2 breakers fail	4 to 10 seconds	Gen-Fed HEAF [formerly: Generator Fed]

*The durations shown in this table is solely when viewed upon the speed of the protection system and not the OE or its consequences (real or potential). Supported by review of four nuclear station Protection & Coordination Calculations, sample TCC curves, EPRI HEAF Survey, and IEEE C57.109. Note: Instantaneous (50) relay elements are not credited.

**The *primary protection fails* takes into consideration that the zone 2 frequency split based on 1 of 7 events in OPEX may include some of the first level of protection works (breaker failure probability), therefore the end state may rely on the zone 2 supply breaker to trip.

C.6 Third Panel Meeting

The group met again on October 26th, 2020, to continue discussing the split fraction and basis.

WG#8: Asked to discuss more about the relationship and differences in Zone 2 between Class 1E and non-Class 1E equipment.

WG#6: Discussed EDS lineups in simplified one-line diagrams to generically explain scenarios that start with a load fault, and sequential breaker failures and resulting energies. Started with system voltages, but then also looked at arc voltages from of NEA/CSNI/R (2017)7. Average of 880 V used to calculate arc energy. Fault current of 30,000 amps.

WG#2: Clarified that Table 4-1 is the generator voltage, so arc voltage will be lower than that.

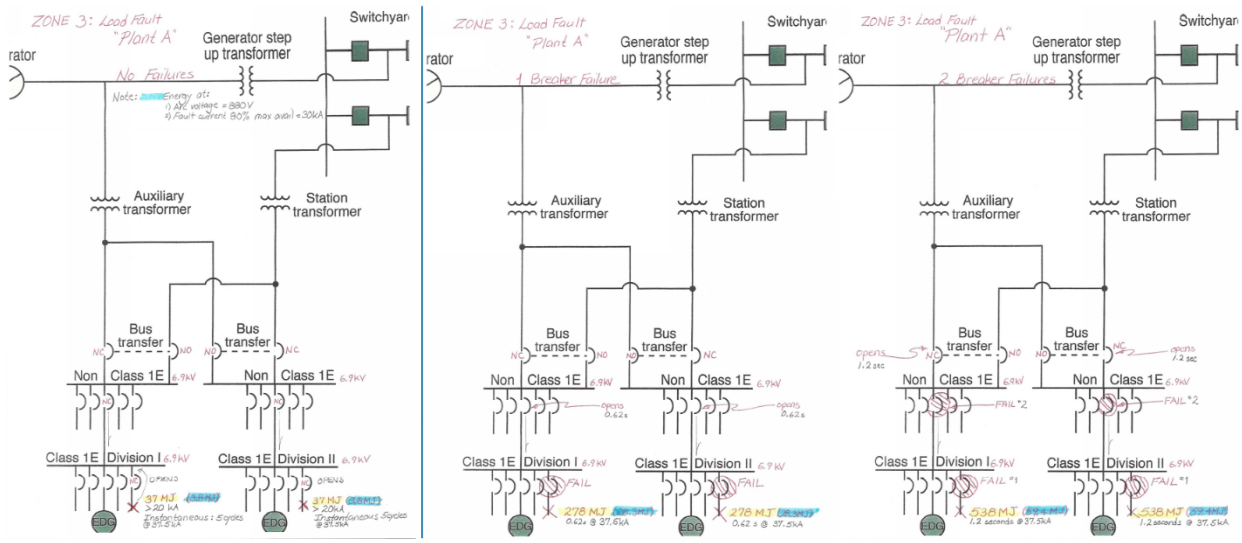

Figure C-2
Zone 2 Load Fault Exercise in Fault Clearing Times

X's indicate load fault (e.g., service water pump motor) in Zone 2.

- Fault and load breaker opens in 5 cycles (fault energy limited 3.8 MJ). Not a HEAF.
- Fault and first breaker (load breaker) fails to interrupt. Now bus supply breaker is called to open and does so within 0.5 seconds. (fault energy 28 MJ)
- Fault with two breaker failures (load breaker and bus supply breaker). Next breaker that can operate is first out breaker from either SAT or UAT (Zone 1 supply breaker), which opens in 1.2 seconds (fault energy 59 MJ)
- Fault with three breaker failures (load breaker, bus 2 supply breaker, and bus 1 supply breaker failure), which now relies on the backup protection for the yard transformers.
    - For UAT, lockout goes to switchyard breakers and generator field breaker. Generator fed fault 4 seconds (179 MJ before generator fed fault).
    - For SAT, set at 3.9 seconds (fault energy 175 MJ), immediately trips switchyard circuit breaker and clears fault without generator fed fault.

Durations are set by inverse time relay curves for 51 relay (not just available fault current).

If we did this as a bus fault, just take out one breaker, but values the same as just covered.

WG#8: Do we have a basis for the Class 1E supply breaker being more reliable (such that we can limit the probability of generator fed faults in Zone 2/Class 1E)?

WG#7: Example applicable to both Class 1E and non-Class 1E buses, with exception that the timing might be different.

WG#8: Do we need different split for Class 1E / non-Class 1E? Given care, maintenance, etc. for Class 1E systems?

WG#7: When implementing this, more likely during normal operations that the Zone 1 Class 1E is going to be powered by the SAT (as opposed to the UAT). If pushing frequency more towards normal supply this may show the applicable differences. For Zone 2, larger weight of Class 1E equipment versus non-Class 1E equipment.

WG#8 challenged WG#4 if the estimates would change if talking about Class 1E vs. non 1E systems. WG#4 – Zone 2 has some upstream breakers that can interrupt the fault that should not be in original ZOI. But those breakers are not redundant (not set to interrupt at same time) and may interrupt with a delay. Factored into estimate for non-optimal setting. There is some art in where to set that upstream breaker – depends on the largest starting motor load on top of running motors and might have to be set higher to accommodate that. There are some sweet spots for setting this and some optimization, but not always there. For Class 1E/non-Class 1E; maintenance strategies for Class 1E are more rigorous and design analysis is more rigorous. Some non-Class might not be as well maintained. Would have a hard time quantifying the difference between Class/non-Class.

WG#1: If we treat Class 1E differently in Zone 2, we would have to treat it differently in Zone 1.

WG#6: Discussed some of the potential reasons why Class 1E systems may be more reliable:

- Technical specifications periodic surveillance (30 days/90 days) to ensure continued operability.
- Technical specifications for operability are met and documented
- Action request / work order priority for Class 1E equipment is higher
    - SRO has to do action request work order screening.
- Quality of maintenance (QA hold points, dual verification, critical acceptance criteria, relay setting calibrations to Generic Letter 96-01 requirements, DC control power)
- Less deferrals for PM in Class 1E equipment

WG#8: Should we have two sets of numbers in the event tree? One for Class 1E (lower probability of generator fed fault) and one for non-Class 1E (higher probability of generator fed fault)?

Working group agreed that the Class 1E buses / breakers are more reliable but agreed we do not have the data to further split this up. Working group agreed to update numbers based on previous discussions and get back together two days later.

C.7 Fourth Panel Meeting

The group met again on October 28th to discuss the revised expert input. After the previous call, the working group members were able to adjust their initial estimates for final aggregation. The final input is shown in Table C-4.

Table C-4
Final Input Received from Working Group Members

	WGM #1	WGM #2	WGM #3	WGM #4	WGM #5	WGM #6	WGM #7	WGM #8
Vertical Section in Zone 1	0.65/0.2/0.15*	0.5/0.3/0.2	0.6/0.3/0.1	0.567/0.283/0.15*	0.57/0.29/0.14	0.57/0.29/0.14*	0.567/0.283/0.15*	0.567/0.283/0.15*
Gen Fed or SWYD / SBL (Zone 1)	0.05/0.95	0.1/0.9	0.1/0.9	0.0525/0.9475	0.1/0.9	0.1/0.9	0.1/0.9	0.1/0.9
End State A	0.559	0.430	0.516	0.488	0.490	0.490	0.488	0.488
End State B	0.172	0.258	0.258	0.243	0.249	0.249	0.243	0.243
End State C	0.006	0.017	0.009	0.005	0.012	0.012	0.009	0.009
End State D	0.123	0.155	0.077	0.081	0.108	0.108	0.077	0.077
Vertical Section in Zone 2	0.65/0.2/0.15*	0.5/0.3/0.2	0.6/0.3/0.1	0.567/0.283/0.15*	0.45/0.45/0.1	0.45/0.45/0.1	0.567/0.283/0.15*	0.567/0.283/0.15*
Gen Fed or SWYD / SBL HEAF (Zone 2)	0.05/0.95 and 0/1.0	0.1/0.9	0.1/0.9 and 0.05/0.95	0.0275/0.9725	0.1/0.9 and 0.05/0.95	001/0.99	0.03/0.97	0.1/0.9 and 0.05/0.95
End State E	0.005	0.007	0.008	0.002	0.006	0.001	0.002	0.008
End State F	0.086	0.063	0.076	0.077	0.057	0.062	0.077	0.071
End State G	0.001	0.004	0.004	0.001	0.006	0.001	0.001	0.004
End State H	0.027	0.038	0.038	0.039	0.057	0.062	0.038	0.036
End State I	0.000	0.003	0.001	0.000	0.001	0.000	0.000	0.001
End State J	0.021	0.025	0.013	0.014	0.013	0.014	0.014	0.013
Notes	*Primary supply gets larger frequency	*Primary supply gets larger frequency	*Primary supply gets larger frequency	*Primary supply gets larger frequency Credited HEAF breaker failure probability	*Primary supply gets larger frequency	*UAT/SAT/Load split based on OPEX	*Primary supply gets larger frequency	*Primary supply gets larger frequency

C.7.1 Zone 1 Vertical Section Top Event

WG#1, WG#2, WG#4, WG#6, WG#7, and WG#8 each reported different estimates to differentiate between the primary and alternate supply (the primary supply feed received a higher probability).

WG#3 and WG#5 did not split this out and both reported that they did not provide updated numbers at the time of the call. WG#3 had split 90% to the supply but recommended an equitable split between the two supply sections. After discussions WG#3 agreed with biasing the split fraction towards the primary supply sections.

WG#2: Stated that the 0.5 value is for the primary and 0.3 for the backup/alternate supply.

WG#6: Used OPEX to come up with this vertical section split.

WG#1: Revised primary supply fraction from 0.6 to 0.65, to partition more of the frequency in the supply cabinets versus the load sections. Believe the supply section is the most likely location for a HEAF.

After this discussion, these estimates were aggregated and presented at the next meeting. WG#3 and WG#5 will submit three numbers to have input consistent with the rest of the working group.

C.7.2 Zone 1 Load ZOI Top Event (Generator Fed / FCT versus Misc. HEAF)

Most estimates are between 5 and 10% for generator fed /FCT clear time HEAF.

WG#1: Incorporated random breaker failure probability plus some margin to come up with 5/95 split.

WG#2: Looked at PhD dissertation for interdependencies and common cause failures for re-configuration systems (e.g., telecom / electrical distribution systems). Went through failure modes for each and had several examples including a circuit breaker for a distribution system. Saw a lot of analogies between his work and our work, so drew on his research for my estimates. Used 10/90 split.

WG#1 asked if there was a scenario in which the plant always runs from the SAT and would never run from the UAT. Should that plant postulate generator-fed faults?

WG#6: They shouldn't. There are some plants where the Class 1E buses do not connect to a UAT. For BOP, this may not be the case (may be aligned to UAT).

WG#3: The probability still has to sum to 1, so it would just go into another sequence.

WG#7: If switchgear only had one supply, the analyst would sum the supply frequency and use that value.

WG#4: Likewise, if there is more than one alternate, going to need to split the alternate probability among the alternates. Zone 1 may only have one alternate, but Zone 2 you may have more than one alternate.

WG#7: How about EDG cubicles? Won't be running during normal operation, so keep them as a load? WG#4 challenged that assumption. The protection scheme and everything about them is more similar to a supply but agree they won't be running. The EDG does get tied to grid about once per month. Could this be an alternate supply? WG#6: primary and backup are the normal

supplies and didn't think too much of EDG for HEAF. EDG is not going to produce the same amount of power as an offsite source, so probably have a smaller ZOI. Several members discussed potentially the ZOI is more similar to a load versus a supply. This discussion was tabled for now.

After this discussion, decided to aggregate the estimates for the zone 1 load ZOI split.

C.7.3 Zone 2 Vertical Section Top Event

The working group discussed the likelihood of HEAFs within Zone 2 switchgear (supply and load sections).

WG#1: For vertical section, are we going to use the same splits? As we get further down the EDS it is harder and harder to imagine generator fed faults.

> WG#6 has different values for Zone 1 versus Zone 2, but everyone else had the same values as Zone 2. WG#6 had a different breakdown, and their reasoning was there was not much OPEX in Zone 2, so did an equal split.

> WG#1: Explain the connection between Zone 1 and Zone 2. Are there multiple sources/supplies? Answer: depends on the plant. To be in Zone 2, the normal feed has to be from Zone 1, but there could be alternate feeds that come directly from a yard transformer (some newer Zone 2 switchgear). WG#4 agreed and discussed that we need good guidance on how to apply this situation correctly in the PRA.

C.7.4 Zone 2 ZOI Top Event

WG#8: Used two different numbers between Supply (used 90/10 split based on engineering judgment). When I got to the load, there is an additional breaker that can prevent the HEAF, and although potentially co-located, halved previous estimate (95/5). Generator fed fault in load section even smaller due to the additional breaker.

> WG#4: Doesn't the vertical section split account for supply versus load? WG#8 scoped out the supply/load separation based on OPEX but used more judgment/extra breaker for the ZOI portion.

> WG#6: Remember the loads also includes the main bus bar as well (so in these cases the load breaker is downstream of the fault and cannot interrupt).

WG#1: If in Zone 2 load, assigned a 0% chance of having a generator fed fault. Likely in 1E-7 range for likelihood in this branch. In addition to the initiating HEAF/breaker failure you would need at least 2 additional breakers to fail to get a generator fed HEAF. Working group agreed that load centers aren't susceptible to generator fed faults, so felt comfortable removing this from the load branch.

> WG#8: We may go through this activity and determine that this might wash out and the analyst may not have to postulate.

> WG#7: A generator fed fault/ FCT fault in branch I is one entire train of the medium voltage EDS system not functioning.

End states are aggregated, and once estimates are known the working group can make a decision if it makes sense for the analyst to postulate this failure.

Working group can also revisit crediting the "bonus breaker" and that can be one way where we can eliminate the generator fed HEAFs in Zone 2.

C.8 Fifth Panel Meeting / Final Estimates

The group met again on November 2nd to discuss the aggregated results. The results were presented for both the average and the median. The working group chose to select the average value. The event tree with vertical section and ZOI probabilities are shown in Figure C-3 and Figure C-4.

Ignition Frequency	Vertical Section	ZOI	End State Probability	End Sequence
Zone 1 SWGR Frequency	Primary Supply (0.57)	Generator Fed or SWYD FCT	0.57	A_1
	Secondary Supply (0.28)	Generator Fed or SWYD FCT	0.28	B_1
	Load & Main Bus Bar (0.15)	Generator Fed or SWYD FCT (0.09)	0.01	C_1
		Misc. HEAF (0.91)	0.14	D_1

Figure C-3
Zone 1 Event Tree

Ignition Frequency	Vertical Section	ZOI	End State Probability	End Sequence
Zone 2 SWGR Frequency	Primary Supply (0.54)	Generator Fed or SWYD FCT (0.06)	0.03	A_2
		Misc. HEAF (0.94)	0.51	B_2
	Secondary Supply (0.32)	Generator Fed or SWYD FCT (0.06)	0.02	C_2
		Misc. HEAF (0.94)	0.30	D_2
	Load & Main Bus Bar (0.14)	Generator Fed or SWYD FCT (0.04)	0.01	E_2
		Misc. HEAF (0.96)	0.13	F_2

Figure C-4
Zone 2 Event Tree

APPENDIX D

SUMMARY OF ENERGETIC PHASE OF THE HEAF ZOI FROM FDS

D.1 Introduction

This appendix describes the process used to develop the ZOIs in Sections 7 – 9 of this report using the ZOIs calculated from FDS simulations of low-voltage switchgear, medium voltage switchgear, and non-segregated bus ducts. The FDS modeling report [16] provides a detailed description of the FDS modeling approach, the inputs, and the outputs. The results of these FDS simulations are reviewed by the WG in combination with industry data on fault clearing times [16, 42] to establish a series of end states for screening ZOIs, configuration specific ZOIs (including refinements). These end states correspond to the event trees and ZOI tables in Sections 7 – 9 of this report.

The documentation process for the energetic phase ZOIs begins with the FDS results as reported in the FDS ZOI report [16]. Significant observations used by the WG to develop end states are then identified, which are then linked to specific FDS simulations considered when developing the energetic phase ZOIs. The general process used by the WG involved a review of predicted energetic phase ZOIs associated with an end state, and the selection of a representative value within this group of FDS simulation results in units of feet. This value was then rounded up, in increments of 0.5 ft.

In most cases, the WG developed up to four types of energetic phase ZOIs for 15 MJ/m² and 30 MJ/m² fragility targets, depending on the equipment involved:

1. Screening ZOIs, which consist of a single ZOI distance uniformly applied to all faces of the switchgear enclosures or NSBDs. The screening ZOIs are provided for a range of SAT and UAT fault clearing times and are only developed for MV SWGR.
2. Configuration specific ZOIs, which consist of an array of ZOI distances for different switchgear or NSBD faces. These ZOIs are provided for a range of SAT and UAT fault clearing times (FCT).
3. Supply breaker limited ZOIs, which are a subset of the configuration specific ZOIs that use a sub-set of the FDS simulation results associated with the configuration specific ZOIs. These are applicable to MV SWGR.
4. ZOI refinements that use a defined sub-set of the FDS simulation results associated with the breaker style used with MV SWGR.

The resulting energetic phase ZOIs are provided in units of feet in this appendix. Several examples are selected for each switchgear type and NSBD configuration to illustrate the development of specific energetic phase ZOIs from the identified FDS simulation end state grouping.

D.2 Load Centers

ZOIs are provided for load centers in Section 7 of this report. The ZOIs are grouped as follows:

- End location
- Interior location
- Vertical location

The primary difference between an end location and an internal location is that there are no side ZOIs for internal location HEAFs. The vertical location distinguishes where the ZOI initiates from vertically in the load center.

D.2.1 FDS Simulation Results for Load Centers

A total of 10 unique baseline FDS input files and simulations were developed for the low-voltage switchgear enclosures. The simulations evaluated a range of fault locations and bus-bar material compositions, though they all use a 90 MJ arc energy power profile as described in Section 7.2.

D.2.1.1 FDS Predicted Energetic Phase ZOIs

The FDS results for the 10 load center HEAF simulations are summarized in Table D-1. These results are as provided in the FDS ZOI report [16]. The FDS ZOI report provides 24 sensitivity scenarios for the load centers using alternate fault power profiles; these were not directly used by the WG to determine the ZOIs and are not shown in Table D-1.

Table D-1
Summary of Load Center Energetic Phase ZOIs Predicted by FDS [16]

Scenario summary						ZOI Distance (m)									
						15 MJ/m² target fragility					30 MJ/m² target fragility				
Scenario designator[1]	Bus bar material	Arcing fault duration (s)	Arc location	Arc elevation	Arc energy (MJ)	Back	Left	Right	Top	Front	Back	Left	Right	Top	Front
LV-BASE-1	Aluminum	41	Breaker	Mid-height	90	None[2]	None	0.76	None	None	None	None	0.48	None	None
LV-BASE-2	Aluminum	41	Breaker	Top	90	None	None	0.79	0.50	None	None	None	0.50	0.26	None
LV-BASE-3	Aluminum	41	Bus bar comp.	Mid-height	90	None	None	0.79	None	None	None	None	0.50	None	None
LV-BASE-4	Aluminum	41	Bus bar comp.	Top	90	0.08	None	0.77	0.73	None	None	None	0.49	0.45	None
LV-BASE-5	Aluminum	41	Breaker to bus bar comp.[3]	Mid-height	90	None	None	0.71	None	None	None	None	0.43	None	None
LV-BASE-6	Aluminum	41	Breaker to bus bar comp.	Top	90	None	None	0.73	0.51	None	None	None	0.44	0.25	None
LV-BASE-7	Copper	41	Breaker	Mid-height	90	None	None	0.72	None	None	None	None	0.45	None	None
LV-BASE-8	Copper	41	Breaker	Top	90	None	None	0.75	0.45	None	None	None	0.47	0.22	None
LV-BASE-9	Copper	41	Bus bar comp.	Mid-height	90	None	None	0.77	None	None	None	None	0.48	None	None
LV-BASE-10	Copper	41	Bus bar comp.	Top	90	0.07	None	0.75	0.73	None	None	None	0.48	0.44	None

[1]The FDS input designator is not the same as the input file name but uniquely corresponds to a single FDS input file. Refer to Appendix C of the FDS ZOI report for the corresponding input file nomenclature designator [16].

[2]None means there is no external ZOI.

[3]Fault begins at the breaker and migrates to the bus bar compartment.

D.2.1.2 FDS Simulation Results Observations

Several significant findings were identified in the FDS ZOI report that simplify the number of ZOIs to characterize the hazard [16]:

- The bus-bar material composition does not have a significant effect on the energetic phase ZOI. The ZOIs are within the uncertainty range for copper and aluminum bus-bar simulations for a given fault location, fault type, and fault energy.
- The energetic phase ZOI results are sensitive to the distance between the target and the arc location and to the number of enclosure boundaries between the arc and the target.

Based on these observations, the WG developed ZOIs for load centers that are applicable to an end location, an internal location and where those are vertically for 15 MJ/m² and 30 MJ/m² fragility targets. Screening ZOIs and refinements are not applied to load centers due to the simplicity of the overall results.

D.2.2 Load Center Energetic Phase ZOI Mapping

The energetic phase ZOIs for load centers are mapped to specific FDS results. This mapping allows the WG to review sub-sets of the FDS results that correspond to a ZOI. The ZOIs are grouped by arc location within the switchgear as shown in Figure 7-2. The mapping to the FDS simulations is listed below.

- Location A: LV-BASE-5 and LV-BASE-6
- Locations B and C: LV-BASE-5
- Location D: LV-BASE-6, with side ZOIs set to zero
- Locations E and F: LV-BASE-5, with side and vertical ZOIs set to zero

These simulations most closely represent the type of HEAFs expected in load centers. The remaining eight baseline FDS simulations are used to confirm these ZOIs are reasonable for other types of configurations given the arc power profile.

D.2.3 Determination of the Load Center Energetic Phase ZOIs

As noted in Section D.1, the general process used by the WG involved a review of predicted energetic phase ZOIs associated with an end state, and the selection of a representative value within this group of FDS simulation results in units of feet. This value was then rounded up, in increments of 0.5 ft.

The process is illustrated using the FDS simulation results for Location A with a 15 MJ/m² target fragility. The ZOIs as calculated by FDS are listed in Table D-2.

Table D-2
FDS Simulation Results Applicable to Load Center with a 15 MJ/m² Target Fragility

FDS simulation	ZOI (m (ft))				
	Back	Left	Right	Top	Front
LV-BASE-5	None	None	0.71 (2.4)	None	None
LV-BASE-6	None	None	0.73 (2.4)	0.51 (1.7)	None
Maximum	None	**None**	**0.73 (2.4)**	**0.51 (1.7)**	None
WG ZOI (End Location)	**None**	**0.76 (3.0)**		**0.61 (2.0)**	**None**

There are no external ZOIs for the back and front of the LV SWGR based on the results shown in Table D-2. The maximum right or left ZOI dimensions is 0.73 m (2.4 ft), which is rounded to 0.76 m (2.5 ft). The maximum top ZOI dimension is 0.51 m (1.7 ft), which is rounded to 0.61 (2.0 ft). The same process was used to determine the ZOIs for the 30 MJ/m² fragility targets.

The intermediate location ZOIs are equal to the end location ZOIs, but the right and left ZOIs are set to zero (no external ZOI). The final ZOIs for the LV SWGR are provided in English units in Table 7-1 (Section 7) and in SI units in (Appendix E).

D.3 Medium Voltage Switchgear

ZOIs are provided for medium-voltage switchgear in Section 8 of this report. The ZOIs are grouped as follows:

- Screening ZOIs for 15 MJ/m² and 30 MJ/m² fragility targets (Table 8-2)
- Zone 1 ZOIs for 15 MJ/m² and 30 MJ/m² fragility targets (Table 8-3 and Table 8-4)
- Zone 2 ZOIs for 15 MJ/m² and 30 MJ/m² fragility targets (Table 8-5 and Table 8-6)

The Zone 1 and Zone 2 ZOIs include end states based on the type of switchgear, the arc location within the switchgear, and the applicable FCT.

D.3.1 FDS Simulation Results for Medium-Voltage Switchgear

A total of 48 unique FDS input files and simulations were developed for the medium-voltage switchgear enclosures. The simulations evaluated a range of fault locations, switchgear types, fault types, fault energies, and bus-bar material compositions as summarized in Table 8-1.

D.3.1.1 FDS Predicted Energetic Phase ZOIs

The FDS simulation results for the 48 medium-voltage switchgear HEAF scenarios are summarized in Table D-3. These results are as provided in the FDS ZOI report [16]. Note that the primary cable compartment bus bar is denoted as PCCBB.

Table D-3
Summary of MV Switchgear Energetic Phase ZOIs Predicted by FDS [16]

Scenario summary						ZOI Distance (m)									
						15 MJ/m² target fragility					30 MJ/m² target fragility				
Scenario designator[1,2]	Bus bar material	Stiff (s)	Decay (s)	Arc location	Arc energy (MJ)	Back	Left	Right	Top	Front	Back	Left	Right	Top	Front
MV-GE-1	Al	2	0	Main Bus Bar	68	None	0.18	0.19	0.09	0.21	None	None	None	None	None
MV-GE-2	Al	2	0	PCCBB Load	68	0.57	None	None	None	None	0.32	None	None	None	None
MV-GE-3	Al	2	0	PCCBB Supply	68	None	0.09	0.09	None	None	None	None	None	None	None
MV-GE-4	Al	4	0	Main Bus Bar	135	None	0.66	0.65	0.31	0.64	None	0.36	0.35	0.09	0.29
MV-GE-5	Al	4	0	PCCBB Load	135	0.98	0.41	0.43	0.29	None	0.63	0.17	0.19	0.08	None
MV-GE-6	Al	4	0	PCCBB Supply	135	None	0.48	0.52	0.30	None	None	0.23	0.26	0.08	None
MV-GE-7	Al	5	0	Main Bus Bar	169	None	0.79	0.81	0.41	0.79	None	0.47	0.48	0.16	0.41
MV-GE-8	Al	5	0	PCCBB Load	169	1.13	0.58	0.57	0.46	None	0.76	0.31	0.31	0.20	None
MV-GE-9	Al	5	0	PCCBB Supply	169	None	0.61	0.67	0.45	None	None	0.33	0.38	0.20	None
MV-GE-10	Al	0	15	Main Bus Bar	132	None	0.66	0.65	0.43	0.57	None	0.35	0.35	0.17	0.24
MV-GE-11	Al	0	15	PCCBB Load	132	0.95	0.59	0.57	0.40	None	0.61	0.31	0.28	0.12	None
MV-GE-12	Al	0	15	PCCBB Supply	132	None	0.59	0.59	0.43	None	None	0.30	0.30	0.16	None
MV-GE-13	Al	3	15	Main Bus Bar	233	None	0.97	0.96	0.65	0.96	None	0.67	0.65	0.34	0.56
MV-GE-14	Al	3	15	PCCBB Load	233	1.24	0.83	0.84	0.73	None	0.91	0.50	0.51	0.40	None
MV-GE-15	Al	3	15	PCCBB Supply	233	None	0.91	0.87	0.72	0.08	None	0.57	0.54	0.40	None
MV-GE-16	Al	5	15	Main Bus Bar	300	None	1.12	1.11	0.76	1.15	None	0.81	0.81	0.43	0.72
MV-GE-17	Al	5	15	PCCBB Load	300	1.42	0.94	0.94	0.90	None	1.06	0.62	0.63	0.54	None
MV-GE-18	Al	5	15	PCCBB Supply	300	None	0.97	0.98	0.88	0.33	None	0.68	0.70	0.54	None

Table D-3 Summary of MV Switchgear Energetic Phase ZOIs Predicted by FDS [16] (cont.)

Scenario summary						ZOI Distance (m)									
						15 MJ/m² target fragility					30 MJ/m² target fragility				
Scenario designator[1,2]	Bus bar material	Stiff (s)	Decay (s)	Arc location	Arc energy (MJ)	Back	Left	Right	Top	Front	Back	Left	Right	Top	Front
MV-GE-19	Cu	2	0	Breaker Stabs	68	None	0.06	0.10	None	0.17	None	None	None	None	None
MV-GE-20	Cu	2	0	Main Bus Bar	68	None	0.13	0.16	0.19	0.16	None	None	None	None	None
MV-GE-21	Cu	2	0	PCCBB Load	68	0.52	None	None	None	None	0.27	None	None	None	None
MV-GE-22	Cu	2	0	PCCBB Supply	68	None	0.04	None	None	None	None	None	None	None	None
MV-GE-23	Cu	4	0	Breaker Stabs	135	None	0.60	0.57	None	0.50	None	0.32	0.29	None	0.16
MV-GE-24	Cu	4	0	Main Bus Bar	135	None	0.65	0.61	0.49	0.57	None	0.35	0.32	0.22	0.23
MV-GE-25	Cu	4	0	PCCBB Load	135	0.91	0.56	0.52	0.39	None	0.58	0.28	0.25	0.11	None
MV-GE-26	Cu	4	0	PCCBB Supply	135	None	0.55	0.54	0.32	None	None	0.27	0.27	0.07	None
MV-GE-27	Cu	5	0	Breaker Stabs	169	None	0.73	0.73	None	0.62	None	0.42	0.42	None	0.26
MV-GE-28	Cu	5	0	Main Bus Bar	169	None	0.78	0.75	0.61	0.71	None	0.46	0.43	0.31	0.34
MV-GE-29	Cu	5	0	PCCBB Load	169	1.04	0.68	0.65	0.56	None	0.69	0.38	0.35	0.24	None
MV-GE-30	Cu	5	0	PCCBB Supply	169	None	0.70	0.70	0.52	None	None	0.39	0.40	0.22	None
MV-GE-31	Cu	0	15	Breaker Stabs	132	None	0.65	0.65	None	0.50	None	0.35	0.35	None	0.15
MV-GE-32	Cu	0	15	Main Bus Bar	132	None	0.64	0.64	0.51	0.54	None	0.34	0.34	0.23	0.20
MV-GE-33	Cu	0	15	PCCBB Load	132	0.89	0.61	0.63	0.44	None	0.57	0.32	0.33	0.14	None
MV-GE-34	Cu	0	15	PCCBB Supply	132	None	0.61	0.62	0.47	None	None	0.32	0.32	0.17	None
MV-GE-35	Cu	3	15	Breaker Stabs	233	None	0.95	0.93	None	0.80	None	0.63	0.60	None	0.40

Table D-3 Summary of MV Switchgear Energetic Phase ZOIs Predicted by FDS [16] (cont.)

Scenario summary						ZOI Distance (m)									
						15 MJ/m² target fragility					30 MJ/m² target fragility				
Scenario designator[1,2]	Bus bar material	Stiff (s)	Decay (s)	Arc location	Arc energy (MJ)	Back	Left	Right	Top	Front	Back	Left	Right	Top	Front
MV-GE-36	Cu	3	15	Main Bus Bar	233	None	0.94	0.93	0.81	0.90	None	0.62	0.60	0.46	0.50
MV-GE-37	Cu	3	15	PCCBB Load	233	1.18	0.88	0.87	0.81	None	0.83	0.54	0.53	0.43	None
MV-GE-38	Cu	3	15	PCCBB Supply	233	None	0.89	0.89	0.81	None	None	0.55	0.55	0.43	None
MV-GE-39	Cu	5	15	Breaker Stabs	300	None	1.06	1.05	0.05	0.96	None	0.76	0.74	None	0.53
MV-GE-40	Cu	5	15	Main Bus Bar	300	None	1.06	1.07	0.98	1.07	None	0.76	0.77	0.59	0.65
MV-GE-41	Cu	5	15	PCCBB Load	300	1.31	0.97	0.97	1.01	None	0.97	0.68	0.66	0.58	None
MV-GE-42	Cu	5	15	PCCBB Supply	300	None	0.99	0.98	0.97	0.22	None	0.70	0.70	0.57	None
MV-ABB-1	Cu	2	0	Breaker Stabs	68	None	0.35	0.33	None	None	None	0.14	0.11	None	None
MV-ABB-2	Cu	4	0	Breaker Stabs	135	None	0.78	0.79	None	None	None	0.47	0.48	None	None
MV-ABB-3	Cu	5	0	Breaker Stabs	169	None	0.94	0.93	None	None	None	0.61	0.59	None	None
MV-ABB-4	Cu	0	15	Breaker Stabs	132	None	0.79	0.78	None	None	None	0.47	0.47	None	None
MV-ABB-5	Cu	3	15	Breaker Stabs	233	None	1.06	1.06	None	None	None	0.77	0.76	None	None
MV-ABB-6	Cu	5	15	Breaker Stabs	300	0.15	1.24	1.24	None	None	None	0.92	0.92	None	None

[1]The MV-GE-X designation corresponds to a medium-voltage GE vertical-lift circuit breaker switchgear style and the MV-ABB-X designation corresponds to a medium-voltage ABB horizontal draw-out switchgear style.

[2]The FDS input designator is not the same as the input file name but uniquely corresponds to a single FDS input file. Refer to the FDS ZOI report for corresponding input file nomenclature designator [16].

D.3.1.2 FDS Simulation Results Observations

Several significant findings were identified in the FDS ZOI report that simplify the number of ZOIs that are required to characterize the hazard potential of the HEAF [16]:

- The dominant parameter affecting the energetic phase ZOIs in medium voltage switchgear was the total arc energy.
- A secondary parameter was the switchgear type (vertical lift breaker style or horizontal draw-out style).
- The bus-bar material composition does not have a significant effect on the energetic phase ZOI. The ZOIs are within the uncertainty range for copper and aluminum bus-bar simulations for a given fault location, fault type, and fault energy.
- The energetic phase ZOI results are sensitive to the distance between the target and the arc location and to the number of enclosure barriers and boundaries between the arc and the target.

Based on these observations, the WG developed configuration specific and screening end states for different arc energies corresponding to both SAT and UAT power sources with the results for copper and aluminum bus-bar compositions consolidated. The WG also defined refinements for supply breaker limited and vertical-lift circuit breakers given these observations, the latter of which was a means of incorporating the location specific sensitivity into the energetic phase ZOIs.

D.3.2 MV SWGR Energetic Phase ZOI End State Mapping

The energetic phase ZOI end states developed by the WG are mapped to specific FDS simulation results. This mapping allowed the WG to review sub-sets of the FDS simulation results that correspond to an event tree branch end state when developing the ZOIs.

D.3.2.1 Screening Energetic Phase ZOI End State Mapping

Although the screening energetic phase ZOIs do not have end state designators defined in Section 8, there are a fixed number of end states that are selected using site specific inputs. These end states correspond to ranges of SAT and UAT fault clearing times. Table D-4 summarizes the end states for Zone 1 switchgear and Table D-5 summarizes the end state FDS mapping for the Zone 2 switchgear. The scenario mapping applies to both 15 MJ/m² and 30 MJ/m² fragility targets. The basic mapping strategy for the SAT and UAT fault clearing times are as follows:

- SAT fault clearing times between 0 – 4.00 seconds correspond to FDS simulations with a constant current (stiff) duration of 4 seconds (or less).
- SAT fault clearing times over 4.01 seconds correspond to FDS simulations with a constant current duration of 5 seconds.
- UAT fault clearing times between 0 – 0.50 seconds correspond to FDS simulations with a 0 second constant-current duration and a 15 second generator-fed fault.
- UAT fault clearing times between 0.51 – 2.0 seconds interpolate the results for UAT fault clearing times of 0 – 0.50 seconds and 2.01 – 3.0 seconds, both followed by a 15 second generator-fed fault.

- UAT fault clearing times between 2.01 – 3.0 seconds correspond to FDS simulations with a 3 second constant-current duration and a 15 second generator-fed fault.
- UAT fault clearing times over 3.01 seconds correspond to FDS simulations with a 5 second constant-current duration and a 15 second generator-fed fault.

Note that the ZOI tables combined the 0 to 4.00 s SAT and the 0 to 0.50 s UAT end states because they are the same; however, the ZOIs for these end states were based on different simulations as shown in Table D-4 and Table D-5.

Table D-4
Zone 1 MV Switchgear Screening Energetic Phase ZOI End State Mapping to FDS Simulations

SAT or UAT fault clearing time end state[1]	Applicable FDS simulations
0 to 4.00 s (SAT)	MV-GE-1 through MV-GE-6 MV-GE-19 through MV-GE-26 MV-ABB-1, MV-ABB-2
4.01^{+} s (SAT)	MV-GE-7 through MV-GE-9 MV-GE-27 through MV-GE-30 MV-ABB-3
0 to 0.50 s (UAT)	MV-GE-10 through MV-GE-12 MV-GE-31 through MV-GE-34 MV-ABB-4
0.51 to 2.00 s (UAT)	None, ZOIs interpolated.
2.01 to 3.00 s (UAT)	MV-GE-13 through MV-GE-15 MV-GE-35 through MV-GE-38 MV-ABB-5
3.01^{+} s (UAT)	MV-GE-16 through MV-GE-18 MV-GE-39 through MV-GE-42 MV-ABB-6

[1]UAT fault into a generator-fed fault.

Table D-5
Zone 2 MV Switchgear Screening Energetic Phase ZOI End State Mapping to FDS Simulations

SAT or UAT fault clearing time end state[1]	Applicable FDS simulations
0 to 2.00 s (SAT)	MV-GE-1 through MV-GE-3 MV-GE-19 through MV-GE-22 MV-ABB-1
2.01 to 3.00 s (SAT)	None. The ZOIs are interpolated from 0 to 2.00 second and 3.01 – 4.00 second SAT results.
3.01 to 4.00 s (SAT)	MV-GE-4 through MV-GE-6 MV-GE-10 through MV-GE-12 MV-GE-16 through MV-GE-18 MV-GE-23 through MV-GE-26 MV-GE-31 through MV-GE-34 MV-ABB-2, MV-ABB-4
0.0 to 0.50 s (UAT)	MV-GE-10 through MV-GE-12 MV-GE-31 through MV-GE-34 MV-ABB-4
4.01^{+} s (SAT)	MV-GE-7 through MV-GE-9 MV-GE-27 through MV-GE-30 MV-ABB-3
0.51 to 2.00 s (UAT)	None, ZOIs interpolated.
2.01 to 3.00 s (UAT)	MV-GE-13 through MV-GE-15 MV-GE-35 through MV-GE-38 MV-ABB-5
3.01^{+} s (UAT)	MV-GE-16 through MV-GE-18 MV-GE-39 through MV-GE-42 MV-ABB-6

[1]UAT faults into a generator-fed fault.

D.3.2.2 Configuration Specific Energetic Phase ZOI End States

The configuration specific ZOIs for Zone 1 and Zone 2 switchgear use eight end states to characterize event tree branches that correspond faults located at the normal supply, the secondary supply, the main bus bar, and the load circuit breaker. The end states are essentially equivalent to the SAT and UAT end states described in Section D.3.2.1 for the screening ZOIs. Table D-6 summarizes the eight end states and the corresponding FDS simulations for the configuration specific ZOIs.

Table D-6
MV Switchgear Configuration Specific Energetic Phase ZOI End State Mapping to FDS Simulations

End state designator[1]	Power source and duration[2]	Arc energy (MJ)	Applicable FDS simulations
GF	UAT (0 to 0.50 s)	132	MV-GE-10 through MV-GE-12 MV-GE-31 through MV-GE-34 MV-ABB-4
SAT2	SAT (0 to 2.00 s)	68	MV-GE-1 through MV-GE-3 MV-GE-19 through MV-GE-22 MV-ABB-1
SAT3	SAT (2.01 to 3.00 s)	101	None, ZOIs interpolated between SAT2 and SAT4 end states.
SAT4	SAT (3.01 to 4.00 s)	135	MV-GE-4 through MV-GE-6 MV-GE-23 through MV-GE-26 MV-ABB-2
SATMAX	SAT (4.01^+ s)	169	MV-GE-7 through MV-GE-9 MV-GE-27 through MV-GE-30 MV-ABB-3
UAT2	UAT (0.51 to 2.00 s)	199	None, ZOIs interpolated.
UAT3	UAT (2.01 to 3.00 s)	233	MV-GE-13 through MV-GE-15 MV-GE-35 through MV-GE-38 MV-ABB-5
UATMAX	UAT (3.00^+ s)	300	MV-GE-16 through MV-GE-18 MV-GE-39 through MV-GE-42 MV-ABB-6

[1]The ZOI tables provided in Section 8 append the target fragility threshold to each end state designator.
[2]UAT faults into a generator-fed fault.

D.3.2.3 Supply Breaker Limited Energetic Phase ZOI End States

The ZOI end states that correspond to the supply breaker limited duration are a subset of the configuration specific ZOI end states described in Section D.3.2.2. There are three end states that correspond to 2 second, 3 second, and 4 second arc durations. These are nominally equivalent to the configuration specific ZOI end states SAT2, SAT3, and SAT4, respectively, that are summarized in Table D-6. Table D-7 summarizes these end states and the applicable FDS simulation results.

Table D-7
MV Switchgear Supply Breaker Limited Energetic Phase ZOI End State Mapping to FDS Simulations

End state designator[1]	Power source and duration[2]	Arc energy (MJ)	Applicable FDS simulations
SBL4	SAT (0 to 4.00 s)	135	MV-GE-1 through MV-GE-6 MV-GE-19 through MV-GE-26 MV-ABB-1, MV-ABB-2
SBL2	SAT (0 to 2.00 s)	68	MV-GE-1 through MV-GE-3 MV-GE-19 through MV-GE-22 MV-ABB-1
SBL3	SAT (0 to 3.00 s)	101	None, ZOIs interpolated between SBL2-15 and SBL4-15 end states.

[1]The ZOI tables provided in Section 8 append the target fragility threshold to each end state designator.

D.3.2.4 Vertical-Lift Circuit Breaker Refinement Energetic Phase ZOI End States

The vertical-lift circuit breaker refinement represents a subset of the configuration specific and supply breaker limited energetic phase ZOI FDS simulations that incorporates both the fault location (supply or load) and the switchgear type (vertical lift) applicable to Zone 1 and Zone 2 medium-voltage switchgear. There are no end state designators uniquely applicable to the vertical-lift circuit breaker style refinement energetic phase ZOIs. The configuration specific end state designators are used for both load and supply fault locations, though the ZOIs that correspond to these end states may be different. Table D-8 summarizes the applicable FDS simulations for the vertical-lift circuit breaker refinement to the ZOIs.

Table D-8
MV Switchgear Vertical-Lift Circuit Breaker Refinement Energetic Phase ZOI End State Mapping to FDS Simulations

Fault location	End state designator[1]	Power source and duration[2]	Arc energy (MJ)	Applicable FDS simulations
Normal supply and secondary supply	GF	UAT (0 to 0.50 s)	132	MV-GE-10, MV-GE-12 MV-GE-31, MV-GE-32, MV-GE-34
	SAT2	SAT (0 to 2.00 s)	68	MV-GE-1, MV-GE-3 MV-GE-19, MV-GE-20, MV-GE-22
	SAT3	SAT (2.01 to 3.00 s)	101	None, ZOIs interpolated.
	SAT4	SAT (3.01 to 4.00 s)	135	MV-GE-4, MV-GE-6 MV-GE-23, MV-GE-24, MV-GE-26
	SATMAX	SAT (4.01^{+} s)	169	MV-GE-7, MV-GE-9 MV-GE-27, MV-GE-28, MV-GE-30
Supply breaker limited	SBL4	SAT (0 to 4.00 s)	135	MV-GE-1, MV-GE-2 MV-GE-19, MV-GE-21, MV-GE-22
	SBL2	SAT (0 to 2.00 s)	68	MV-GE-4, MV-GE-5 MV-GE-23, MV-GE-25, MV-GE-26
	SBL3	SAT (0 to 3.00 s)	101	None, ZOIs interpolated between SBL2 and SBL4 end states.
Main bus bar or load breaker	GF	UAT (0 to 0.50 s)	132	MV-GE-10, MV-GE-11 MV-GE-31, MV-GE-33, MV-GE-34
	UAT2	UAT (0.51 to 2.00 s)	199	None, ZOIs interpolated.
	UAT3	UAT (2.01 to 3.00 s)	233	MV-GE-13, MV-GE-14 MV-GE-35, MV-GE-37, MV-GE-38
	UATMAX	UAT (3.00^{+} s)	300	MV-GE-16, MV-GE-17 MV-GE-39, MV-GE-41, MV-GE-42
	SAT2	SAT (0 to 2.00 s)	68	MV-GE-1, MV-GE-2 MV-GE-19, MV-GE-21, MV-GE-22
	SAT3	SAT (2.01 to 3.00 s)	101	None, ZOIs interpolated between SAT2 and SAT4 end states.
	SAT4	SAT (3.01 to 4.00 s)	135	MV-GE-4, MV-GE-5 MV-GE-23, MV-GE-25, MV-GE-26
	SATMAX	SAT (4.01^{+} s)	169	MV-GE-7, MV-GE-8 MV-GE-27, MV-GE-29, MV-GE-30

[1]The ZOI tables provided in Section 8 append the target fragility threshold to each end state designator.

D.3.3 Determination of the Medium-Voltage Switchgear Energetic Phase ZOIs

As noted in Section D.1, the general process used by the WG involved a review of predicted energetic phase ZOIs associated with an end state, and the selection of a representative value within this group of FDS simulation results in units of feet. This value was then rounded up, in increments of 0.5 ft. This section provides an illustration of this process for the screening, configuration specific, and refinement energetic phase ZOIs. The overall ZOIs are provided in Sections 8.4 through 8.6 all end states considered in Section 8 of this report. Note that the screening ZOIs are determined using the configuration specific ZOIs rather than separately reviewing the FDS results since the configuration specific ZOIs use all FDS results. This

ensures a consistent rounding system between the screening and configuration specific ZOIs. As such, the configuration specific ZOIs are discussed before the screening ZOIs in this section.

D.3.3.1 Determination of the Configuration Specific Energetic Phase ZOIs

The configuration specific ZOIs are determined from the FDS simulation results as grouped in Table D-6. These ZOIs are provided for the back, left/right, top, and front for 15 MJ/m² and 30 MJ/m² target fragilities. To illustrate the process, the energetic phase ZOIs for the SAT2 end state with a 15 MJ/m² target fragility is assessed. Based on Table D-6, the following FDS simulation results apply:

- MV-GE-1 through MV-GE-3
- MV-GE-19 through MV-GE-22
- MV-ABB-1

The ZOIs predicted by FDS applicable to this end state are summarized in Table D-9 as determined using the data provided in Table D-6. The ZOIs for end state SAT2 are determined using the data provided in Table D-9 with the FDS results for the left and right faced combined. Generally, the maximum value in feet was rounded up to the nearest 0.5 ft increment, unless the maximum value was an outlier or the value in feet was slightly higher than the lower 0.5 ft increment. For end state SAT2, the maximum value for the back, left/right, top, and front faces is rounded up to the nearest 0.5 ft increment as shown in Table D-9. This process was applied to all end states listed in Table D-6.

Table D-9
FDS Simulation Results Applicable to Configuration Specific End State SAT2 with a 15 MJ/m² Target Fragility

FDS simulation	ZOI (m (ft))				
	Back	**Left**	**Right**	**Top**	**Front**
MV-GE-1	None	0.18 (0.59)	0.19 (0.62)	0.09 (0.30)	0.21 (0.69)
MV-GE-2	0.57 (1.9)	None	None	None	None
MV-GE-3	None	0.09 (0.30)	0.09 (0.30)	None	None
MV-GE-19	None	0.06 (0.20)	0.10 (0.33)	None	0.17 (0.56)
MV-GE-20	None	0.13 (0.43)	0.16 (0.52)	0.19 (0.62)	0.16 (0.52)
MV-GE-21	0.52 (1.7)	None	None	None	None
MV-GE-22	None	0.04 (0.13)	None	None	None
MV-ABB-1	None	0.35 (1.1)	0.33 (1.1)	None	None
Maximum	**0.57 (1.9)**	**0.35 (1.1)**	**0.33 (1.1)**	**0.19 (0.62)**	**0.21 (0.69)**
WG ZOI	**0.61 (2.0)**	**0.46 (1.5)**		**0.30 (1.0)**	**0.30 (1.0)**

D.3.3.2 Determination of the Screening Energetic Phase ZOIs

The screening energetic phase ZOIs are determined from the maximum configuration specific energetic phase ZOI dimensions across all faces for the applicable FCT end state. A simple example to illustrate this process using the results from Section D.3.3.1. Based on Table D-5, the Zone 1 MV switchgear screening ZOI for an SAT with a FCT between 0 – 2.00 seconds uses the same FDS simulations as end state SAT2, which are summarized in Table D-9. The WG determined the screening energetic phase ZOIs use the maximum ZOI dimension across all faces, or 0.61 m (2.0 ft) for this case. This process was applied to all screening ZOIs.

D.3.3.3 Determination of the Configuration Specific Supply Breaker Limited Energetic Phase ZOIs

The configuration specific 2, 3, and 4 second supply breaker limited energetic phase ZOIs are the same as the ZOIs for configuration specific end states SAT2, SAT3, and SAT4, respectively. The same process described in Section D.3.3.1 is applied to determine the ZOI dimensions.

D.3.3.4 Determination of the Vertical-Lift Circuit Breaker Refinement Energetic Phase ZOIs

The vertical-lift circuit breaker refinement energetic phase ZOIs are determined using the FDS results applicable to the vertical-lift circuit breaker style switchgear and are further divided into load and supply groupings (see Table D-8). The basic process described in Section D.3.3.1 is applied using the FDS simulation groupings listed in Table D-8. As an example, consider the ZOIs for the UAT3 end state with a fault in the main bus bar or load breaker (load fault), applicable to a the vertical-lift circuit breaker refinement with a 15 MJ/m² target fragility. Based on Table D-8, the following FDS results apply:

- MV-GE-13
- MV-GE-14
- MV-GE-35
- MV-GE-37
- MV-GE-38

The ZOIs predicted by FDS applicable to this end state are summarized in Table D-10 as determined using the data in Table D-8. The ZOIs for end state UAT3 applicable to the vertical-lift circuit breaker style refinement with an arc on the load side are determined using the data provided in Table D-10 with the FDS results for the left and right faced combined. Similar to the example provided in Section D.3.3.1, the maximum value in feet was rounded up to the nearest 0.5 ft increment, unless the maximum value was an outlier or the value in feet was slightly higher than the lower 0.5 ft increment. For end state UAT3 with the vertical-lift style circuit breaker refinement, the maximum value for the top face is rounded up to the nearest 0.5 ft increment and the maximum value for the back, left/right, and front faces is rounded down to the nearest 0.5 ft increment in Table D-10. This process is applied to all end states listed in Table D-8.

Table D-10
FDS Simulation Results Applicable to the Vertical-Lift Circuit Breaker Style Refinement with a Load Fault, End State of UAT3, and a 15 MJ/m² Target Fragility

FDS simulation	ZOI (m (ft))				
	Back	Left	Right	Top	Front
MV-GE-13	None	0.97 (3.2)	0.96 (3.1)	0.65 (2.1)	0.96 (3.1)
MV-GE-14	1.24 (4.1)	0.83 (2.7)	0.84 (2.8)	0.73 (2.4)	None
MV-GE-35	None	0.95 (3.1)	0.93 (3.1)	None	0.80 (2.6)
MV-GE-37	1.18 (3.9)	0.88 (2.9)	0.87 (2.9)	0.81 (2.7)	None
MV-GE-38	None	0.89 (2.9)	0.89 (2.9)	0.81 (2.7)	None
Maximum	**1.24 (4.1)**	**0.97 (3.2)**	**0.96 (3.1)**	**0.81 (2.7)**	**0.96 (3.1)**
WG ZOI	**1.2 (4.0)**	**0.91 (3.0)**		**0.91 (3.0)**	**0.91 (3.0)**

D.3.4 Summary of the Medium-Voltage Switchgear Energetic Phase ZOIs

The screening energetic phase ZOIs for the medium voltage switchgear are provided in Table 8-2 (English units) and Table E-2 (SI units). Similarly, the full set of configuration specific and refinement ZOIs are provided in Table 8-3 through Table 8-6 (English units) and in Table E-3 and Table E-6 (SI units).

D.4 Non-Segregated Bus Ducts

Energetic phase ZOIs are provided for NSBDs in Section 9 of this report. There are six zones defined for bus ducts: IPDB, BDUAT, BDSAT, BD1, BD2, and BDLV. With the exception of IPDB (the guidance does not change) the remaining five zones contain a total of fourteen end states.

D.4.1 FDS Results for Non-Segregated Bus Ducts

A total of 58 unique FDS input files are developed for the NSBDs. The simulations evaluated a range of fault energies, duct geometries, bus-bar material compositions, and duct material compositions. The FDS simulation results for the 57 (accounting for one failed simulation) NSBD HEAF scenarios are summarized in Table D-11. These results are as provided in the FDS ZOI report [16].

Table D-11
Summary of NSBD ZOIs Predicted by FDS [16]

Scenario summary							ZOI (m)									
							15 MJ/m² target fragility					30 MJ/m² target fragility				
HEAF ID[1]	Duct	Bus bar material	Stiff (s)	Decay (s)	Duct geometry	Arc energy (MJ)	Back	Front	Right	Above	Below	Back	Front	Right	Above	Below
NSBD-1	Steel	Aluminum	1	0	Straight	34	None	None	N/A[2]	None	None	None	None	N/A	None	None
NSBD-2	Steel	Aluminum	2	0	Straight	68	0.31	0.31	N/A	0.24	None	0.14	0.14	N/A	0.09	None
NSBD-3	Steel	Aluminum	4	0	Straight	135	0.62	0.60	N/A	0.49	0.38	0.37	0.36	N/A	0.29	0.18
NSBD-4	Steel	Aluminum	5	0	Straight	169	0.73	0.70	N/A	0.60	0.53	0.46	0.44	N/A	0.38	0.29
NSBD-5	Steel	Aluminum	0	15	Straight	133	0.70	0.70	N/A	0.68	0.61	0.44	0.44	N/A	0.43	0.34
NSBD-6	Steel	Aluminum	3	15	Straight	233	1.00	1.02	N/A	0.87	0.92	0.64	0.65	N/A	0.58	0.57
NSBD-7	Steel	Aluminum	5	15	Straight	300	1.18	1.16	N/A	0.98	1.10	0.75	0.74	N/A	0.67	0.69
NSBD-8	Aluminum	Aluminum	1	0	Straight	34	0.15	0.15	N/A	0.16	None	None	None	N/A	None	None
NSBD-9	Aluminum	Aluminum	2	0	Straight	68	0.41	0.41	N/A	0.40	0.22	0.21	0.21	N/A	0.21	None
NSBD-10	Aluminum	Aluminum	4	0	Straight	135	0.71	0.70	N/A	0.66	0.60	0.44	0.43	N/A	0.42	0.34
NSBD-11	Aluminum	Aluminum	5	0	Straight	169	0.82	0.82	N/A	0.76	0.71	0.52	0.52	N/A	0.50	0.43
NSBD-12	Aluminum	Aluminum	3	15	Straight	233	1.07	1.07	N/A	0.95	1.06	0.68	0.68	N/A	0.64	0.67
NSBD-13	Aluminum	Aluminum	5	15	Straight	300	1.24	1.24	N/A	1.07	1.22	0.80	0.80	N/A	0.74	0.78
NSBD-14	Steel	Copper	1	0	Straight	34	None	None	N/A	None	None	None	None	N/A	None	None

Table D-11 Summary of NSBD ZOIs Predicted by FDS [16] (cont.)

Scenario summary																
HEAF ID[1]	Duct	Bus bar material	Stiff (s)	Decay (s)	Duct geometry	Arc energy (MJ)	Back	Front	Right	Above	Below	Back	Front	Right	Above	Below
NSBD-15	Steel	Copper	2	0	Straight	68	0.33	0.30	N/A	0.29	None	0.15	0.13	N/A	0.11	None
NSBD-16	Steel	Copper	4	0	Straight	135	0.63	0.67	N/A	0.73	0.20	0.39	0.42	N/A	0.44	0.06
NSBD-17	Steel	Copper	5	0	Straight	169	0.75	0.78	N/A	0.87	0.34	0.48	0.50	N/A	0.54	0.15
NSBD-18	Steel	Copper	0	15	Straight	132	0.71	0.72	N/A	0.78	0.46	0.45	0.46	N/A	0.49	0.22
NSBD-19	Steel	Copper	3	15	Straight	233	1.06	1.03	N/A	1.12	0.81	0.67	0.66	N/A	0.74	0.49
NSBD-20	Steel	Copper	5	15	Straight	300	1.20	1.22	N/A	1.33	0.98	0.78	0.80	N/A	0.89	0.61
NSBD-21	Aluminum	Copper	1	0	Straight	34	0.20	0.20	N/A	0.18	None	None	0.06	N/A	None	None
NSBD-22	Aluminum	Copper	2	0	Straight	68	0.38	0.44	N/A	0.49	0.18	0.21	0.23	N/A	0.26	None
NSBD-23	Aluminum	Copper	4	0	Straight	135	0.71	0.74	N/A	0.85	0.51	0.45	0.47	N/A	0.53	0.27
NSBD-24	Aluminum	Copper	5	0	Straight	169	0.85	0.88	N/A	0.99	0.66	0.54	0.56	N/A	0.64	0.38
NSBD-25	Aluminum	Copper	0	15	Straight	132	0.79	0.79	N/A	0.89	0.66	0.51	0.50	N/A	0.56	0.38
NSBD-26	Aluminum	Copper	3	15	Straight	233	1.07	1.11	N/A	1.23	0.98	0.68	0.71	N/A	0.81	0.62
NSBD-27	Aluminum	Copper	5	15	Straight	300	1.25	1.28	N/A	1.41	1.14	0.83	0.84	N/A	0.95	0.73
NSBD-28	Steel	Aluminum	2	0	Tee	68	N/A	0.29	N/A	0.26	None	N/A	0.13	N/A	0.11	None

Table D-11 Summary of NSBD ZOIs Predicted by FDS [16] (cont.)

Scenario summary																
HEAF ID[1]	Duct	Bus bar material	Stiff (s)	Decay (s)	Duct geometry	Arc energy (MJ)	Back	Front	Right	Above	Below	Back	Front	Right	Above	Below
NSBD-29	Steel	Aluminum	4	0	Tee	135	N/A	0.60	N/A	0.47	None	N/A	0.36	N/A	0.28	None
NSBD-30	Steel	Aluminum	5	0	Tee	169	N/A	0.71	N/A	0.56	None	N/A	0.45	N/A	0.36	None
NSBD-31	Steel	Aluminum	0	15	Tee	132	N/A	0.69	N/A	0.65	None	N/A	0.43	N/A	0.40	None
NSBD-32	Steel	Aluminum	3	15	Tee	233	N/A	1.00	N/A	0.88	None	N/A	0.64	N/A	0.58	None
NSBD-33	Steel	Aluminum	5	15	Tee	300	N/A	1.18	N/A	0.97	None	N/A	0.75	N/A	0.66	None
NSBD-34	Aluminum	Aluminum	2	0	Tee	68	N/A	0.45	N/A	0.39	None	N/A	0.24	N/A	0.21	None
NSBD-35	Aluminum	Aluminum	4	0	Tee	135	N/A	0.73	N/A	0.60	None	N/A	0.45	N/A	0.37	None
NSBD-36	Aluminum	Aluminum	5	0	Tee	169	N/A	0.85	N/A	0.67	None	N/A	0.53	N/A	0.43	None
NSBD-37	Aluminum	Aluminum	0	15	Tee	132	N/A	0.79	N/A	0.74	None	N/A	0.50	N/A	0.46	None
NSBD-38	Aluminum	Aluminum	3	15	Tee	233	N/A	1.12	N/A	0.95	0.22	N/A	0.70	N/A	0.63	None
NSBD-39	Aluminum	Aluminum	5	15	Tee	300	N/A	1.28	N/A	1.06	0.47	N/A	0.82	N/A	0.71	0.12
NSBD-40	Steel	Copper	2	0	Tee	68	N/A	0.28	N/A	0.32	None	N/A	0.12	N/A	0.13	None
NSBD-41	Steel	Copper	4	0	Tee	135	N/A	0.51	N/A	0.68	None	N/A	0.29	N/A	0.41	None
NSBD-42	Steel	Copper	5	0	Tee	169	N/A	0.67	N/A	0.84	None	N/A	0.42	N/A	0.53	None
NSBD-43	Steel	Copper	0	15	Tee	132	N/A	0.70	N/A	0.75	None	N/A	0.44	N/A	0.46	None

Table D-11 Summary of NSBD ZOIs Predicted by FDS [16] (cont.)

Scenario summary																
HEAF ID[1]	Duct	Bus bar material	Stiff (s)	Decay (s)	Duct geometry	Arc energy (MJ)	Back	Front	Right	Above	Below	Back	Front	Right	Above	Below
NSBD-44	Steel	Copper	3	15	Tee	233	N/A	0.98	N/A	1.11	None	N/A	0.62	N/A	0.73	None
NSBD-45	Steel	Copper	5	15	Tee	300	N/A	1.15	N/A	1.32	None	N/A	0.74	N/A	0.88	None
NSBD-46	Aluminum	Copper	2	0	Tee	68	N/A	0.40	N/A	0.43	None	N/A	0.21	N/A	0.22	None
NSBD-47	Aluminum	Copper	4	0	Tee	135	N/A	0.71	N/A	0.79	None	N/A	0.45	N/A	0.49	None
NSBD-48	Aluminum	Copper	5	0	Tee	169	N/A	0.86	N/A	0.94	None	N/A	0.54	N/A	0.60	None
NSBD-49	Aluminum	Copper	0	15	Tee	132	N/A	0.79	N/A	0.88	None	N/A	0.51	N/A	0.54	None
NSBD-50	Aluminum	Copper	3	15	Tee	233	N/A	1.09	N/A	1.18	None	N/A	0.69	N/A	0.77	None
NSBD-51	Aluminum	Copper	5	15	Tee	300	N/A	1.28	N/A	1.39	0.22	N/A	0.84	N/A	0.93	None
NSBD-52	Aluminum	Aluminum	2	0	Elbow	68	0.45	0.46	0.41	N/A	0.48	0.25	0.26	0.21	N/A	0.26
NSBD-53	Aluminum	Aluminum	4	0	Elbow	135	0.77	0.77	0.74	N/A	0.85	0.50	0.50	0.47	N/A	0.53
NSBD-54	Aluminum	Aluminum	5	0	Elbow	169	0.90	0.91	0.87	N/A	0.99	0.58	0.58	0.56	N/A	0.63
NSBD-55	Aluminum	Aluminum	0	15	Elbow	132	0.79	0.79	0.80	N/A	0.84	0.51	0.51	0.52	N/A	0.52
NSBD-56	Aluminum	Aluminum	3	15	Elbow	233	1.13	1.14	1.13	N/A	1.18	0.72	0.72	0.72	N/A	0.77
NSBD-57	Aluminum	Aluminum	5	15	Elbow	300	1.32	1.32	1.31	N/A	1.37	0.86	0.86	0.84	N/A	0.92

[1]The FDS input designator is not the same as the input file name but uniquely corresponds to a single FDS input file. Refer to the FDS ZOI report for corresponding input file nomenclature designator [16].

[2]N/A indicates that direction contains a bus duct for that HEAF simulation. For example, the straight duct HEAF simulations have the duct running left to right; therefore, right of the arc is inside the duct.

D.4.1.2 FDS Simulation Results Observations

Several significant findings were identified in the FDS ZOI report that simplify the number of energetic phase ZOIs that are required to characterize the hazard potential of the HEAF [16]:

- The dominant parameter affecting the energetic phase ZOIs in NSBDs was the total arc energy.
- A secondary parameter was the duct housing material (aluminum or steel).
- The bus-bar material composition does not have a significant effect on the energetic phase ZOI. The ZOIs are within the uncertainty range for copper and aluminum bus-bar simulations for a given fault type and energy.
- The geometry of the duct (straight, elbow, or tee) does not have a significant effect on the energetic phase ZOI.

Based on these observations, the WG developed configuration specific end states for different arc energies corresponding to both SAT and UAT power sources with the results for duct geometries and copper/aluminum bus-bar compositions consolidated.

D.4.2 Energetic Phase ZOI End State Mapping

The energetic phase ZOI end states developed by the WG are mapped to specific FDS results. This mapping allows the WG to review sub-sets of the FDS results that correspond to an event tree branch end state when developing the energetic phase ZOIs. Due to duct symmetry, there are no screening ZOIs; ZOIs are applied to all faces of the duct. The scenario mapping applies to both 15 MJ/m² and 30 MJ/m² fragility targets. The end state mapping is summarized in Table D-12. The basic mapping strategy for the SAT and UAT fault clearing times are as follows:

- SAT fault clearing times between 0.51 – 1.00 seconds correspond to FDS simulations with a constant current (stiff) duration of 1 second.
- SAT fault clearing times between 1.01 – 1.50 seconds interpolate the results for SAT fault clearing times of 0.51 – 1.00 seconds and 1.51 to 2.00 seconds.
- Supply breaker limited or SAT fault clearing times between 1.51 – 2.00 seconds correspond to FDS simulations with a constant current duration of 2 seconds.
- SAT fault clearing times between 2.01 – 3.00 seconds interpolate the results for SAT fault clearing times of 1.51 – 2.00 seconds and 3.01 to 4.00 seconds.
- SAT fault clearing times between 3.01 – 4.00 seconds correspond to FDS simulations with a constant current duration of 4 seconds.
- Supply breaker limited fault clearing times over 4.01 seconds correspond to FDS simulations with a constant current (stiff) duration of 5 seconds.
- UAT fault clearing times between 0 – 0.50 seconds correspond to FDS simulations with a 0 second constant-current duration and a 15 second generator-fed fault.
- UAT fault clearing times between 0.51 – 2.0 seconds interpolate the results for UAT fault clearing times of 0 – 0.50 seconds and 2.01 – 3.0 seconds and a 15 second generator-fed fault.

- UAT fault clearing times between 2.01 – 3.0 seconds correspond to FDS simulations with a 3 second constant-current duration and a 15 second generator-fed fault.
- UAT fault clearing times over 3.01 seconds correspond to FDS simulations with a 5 second constant-current duration and a 15 second generator-fed fault.

Table D-12
NSBD Energetic Phase ZOI End State Mapping to FDS Simulations

End state ID	SAT or UAT fault clearing time end state[1]	Duct material	Applicable FDS simulations
BDSAT0.5 BDSBL0.5	SAT (0-0.50 seconds)		Interpolated
BDSAT1 BDSBL1	SAT (0.51-1.00 seconds)	Steel	BD-1, BD-14
		Aluminum	BD-8, BD-21
BDSAT1.5 BDSBL1.5	SAT (1.01-1.50 seconds)		Interpolated
BDSAT2 BDSBL2* BDLV	SAT (1.51 to 2.00 seconds) Supply breaker limited (2 sec) Low voltage	Steel	BD-2, BD-15, BD-28, BD-40
		Aluminum	BD-9, BD-22, BD-34, BD-46, BD-52
BDSAT3 BDSBL3	SAT (2.01 to 3.00 seconds)		Interpolated
BDSAT4 BDSBL4*	SAT (3.01 to 4.00 seconds) Supply breaker limited (4 sec)	Steel	BD-3, BD-16, BD-29, BD-41, BD-53
		Aluminum	BD-10, BD-23, BD-35, BD-47
BDSATMAX	SAT (4.01+ seconds)	Steel	BD-4, BD-17, BD-30, BD-42, BD-54
		Aluminum	BD-11, BD-24, BD-36, BD-48
BDGenFed	UAT (0 to 0.5 sec)	Steel	BD-5, BD-18, BD-31, BD-43, BD-55
		Aluminum	BD-25, BD-37, BD-49,
BDGF2	UAT (0.51 to 2 sec)		Interpolated
BDGF3	UAT (2.01 to 3 sec)	Steel	BD-6, BD-19, BD-32, BD-44, BD-56
		Aluminum	BD-12 BD-26, BD-38, BD-50
BDGFMAX	UAT (3+ sec)	Steel	BD-7, BD-20, BD-33, BD-45, BD-57
		Aluminum	BD-13, BD-27, BD-39, BD-51

[1]UAT fault into a generator-fed fault.

D.4.3 Determination of NSBD Energetic Phase ZOIs

As noted in Section D.1, the general process used by the WG involved a review of predicted energetic phase ZOIs associated with an end state, and the selection of a representative value within this group of FDS simulation results in units of feet. The maximum value in feet was rounded up to the nearest 0.5 ft increment unless the maximum value was an outlier or the value in feet was slightly higher than the lower 0.5 increment. This section provides an illustration of this process.

D.4.3.1 Determination of the NSBD Energetic Phase ZOIs

The NSBD energetic phase ZOIs are determined from the FDS results as grouped in Table D-12. These ZOIs are provided for the back, front, top, and bottom (and right, in the case of elbows) for 15 MJ/m² and 30 MJ/m² target fragilities; however, a single value to represent the ZOI in all directions is used. To illustrate the process, the energetic phase ZOIs for the BDSAT2 end state with a 15 MJ/m² target fragility is assessed. Based on Table D-12, the following FDS results apply for a steel duct enclosure:

BD-2, BD-15, BD-28, BD-40

The following FDS results apply for an aluminum duct enclosure:

BD-9, BD-22, BD-34, BD-46, BD-52

The ZOIs predicted by FDS applicable to this end state are summarized in Table D-13 for steel duct housings and Table D-14 for aluminum duct housings, using the data in Table D-12. The energetic phase ZOIs for end state BDSAT2 are determined using the data in Table D-11. Generally, the maximum value in feet was rounded up to the nearest 0.5 ft increment, unless the maximum value was an outlier or the value in feet was slightly higher than the lower 0.5 ft increment. This process was applied to all end states listed in Table D-12.

Table D-13
FDS Simulation Results Applicable to End State BDSAT2 with a 15 MJ/m² Target Fragility and Steel Duct Housing

FDS simulation	ZOI (m (ft))				
	Back	Front	Right	Above	Below
BD-2	0.31	0.31	N/A	0.24	None
BD-15	0.33	0.30	N/A	0.29	None
BD-28	N/A	0.29	N/A	0.26	None
BD-40	N/A	0.28	N/A	0.32	None
Maximum	**0.33 (1.08)**	**0.31 (1.02)**	**N/A**	**0.32 (1.05)**	**0**
WG ZOI	**0.30 (1.00)**				

Table D-14
FDS Simulation Results Applicable to End State BDSAT2 with a 15 MJ/m² Target Fragility and Aluminum Duct Housing

FDS simulation	ZOI (m (ft))				
	Back	Front	Right	Above	Below
BD-9	0.41	0.41	N/A	0.40	0.22
BD-22	0.38	0.44	N/A	0.49	0.18
BD-34	N/A	0.45	N/A	0.39	None
BD-46	N/A	0.40	N/A	0.43	None
BD-52	0.45	0.46	0.41	N/A	0.48
Maximum	**0.45 (1.48)**	**0.46 (1.51)**	**0.41 (1.35)**	**0.49 (1.61)**	**0.48 (1.57)**
WG ZOI	**0.46 (1.50)**				

D.4.3.2 Determination of the NSBD Energetic Phase ZOIs for Fault Clearing Times of Less than 1.5 seconds

The shortest FDS simulation in the original set of runs was 2 seconds. After a review of SAT FCTs, a significant number of SAT fault clearing times fell between 0.0 – 1.5 seconds and the use of a 2 second fault would be excessively conservative. To provide a better resolution of faults with short clearing times, 4 additional FDS simulations were run with a 1s fault duration. The subsequent binning and ZOI determination for short clearing times are summarized in Table D-15.

Table D-15
ZOI Determination for Fault Clearing Times of 2 Seconds or Less

FCT bin	Duct housing	ZOI (m (ft))		Rationale
		30 MJ/m² target fragility	15 MJ/m² target fragility	
0.0 – 0.5 s	Steel	0	0	In FDS, aluminum ducts were observed to breach between 0.2 and 0.3 seconds. Arc termination before, or immediately after the breach is not expected to produce a ZOI external to the duct.
	Aluminum	0	0	
0.51s – 1.0 s	Steel	0	0	This bin's ZOIs are based on the additional 1 s FDS runs. In the FDS simulations, steel ducts were observed to breach at approximately 1 s. No external ZOI is expected if the arc terminates before or immediately after duct breach.
	Aluminum	0.15 (0.5)	0.15 (0.5)	
1.01 – 1.5 s	Steel	0.15 (0.5)	0.15 (0.5)	This bin's ZOIs are interpolated between the 0.51s – 1.0 s row and the 1.51-2.0 s. For the TS targets, the interpolation results in 0.25 m and 0.75 m for steel and aluminum ducts, respectively. At a half-foot resolution, these are rounded up to 0.5 and 1.0 ft.
	Aluminum	0.30 (1.0)	0.30 (1.0)	
1.51 – 2.0 s	Steel	0.30 (1.0)	0.15 (0.5)	This bin's ZOIs are based on the 2 s FDS runs (see Table D-12).
	Aluminum	0.46 (1.5)	0.30 (1.0)	

D.4.4 Summary of the NSBD Energetic Phase ZOIs

The full set of energetic phase ZOIs for the non-segregated bus ducts are provided in Table 9-2 (English units) and Table E-7 (SI units).

APPENDIX E
ZOI TABLES IN SI UNITS

E.1 Purpose

This appendix provides the ZOI tables in SI units for low-voltage switchgear, medium-voltage switchgear, and non-segregated bus ducts.

E.2 Load Center ZOIs

The low-voltage switchgear ZOIs in SI units are in Table E-1. The corresponding English unit table is Table 7-1.

Table E-1
Load Center ZOIs in SI Units

Load center supply breaker location and target fragility	Arc energy (MJ)	Back/Front	External side (m)	Top (m)
A - end location, upper elevation: 15 MJ/m²	90	None	0.76	0.61
A - end location, upper elevation: 30 MJ/m²	90	None	0.45	0.30
B and C – end location, lower elevation: 15 MJ/m²	90	None	0.76	None
B and C – end location, lower elevation: 30 MJ/m²	90	None	0.45	None
D - interior, upper elevation: 15 MJ/m²	90	None	None	0.61
D - interior, upper elevation: 30 MJ/m²	90	None	None	0.30
E and F – interior, lower elevation: 15 MJ/m²	90	None	None	None
E and F – interior, lower elevation: 30 MJ/m²	90	None	None	None

E.3 Medium-Voltage Switchgear ZOIs

E.3.1 Screening ZOIs

The screening ZOIs for medium-voltage switchgear are provided in SI units in Table E-2. The corresponding English unit table is Table 8-2.

Table E-2
Screening ZOIs for MV Switchgear in SI Units

SAT fault clearing time	UAT fault clearing time into generator-fed fault	ZOI (m)	
		15 MJ/m² target fragility	30 MJ/m² target fragility
SAT (0 to 4.00 seconds)	UAT (0-0.50 seconds)	0.91	0.61
SAT (4.01+ seconds)	UAT (0.51 to 2.00 seconds)	1.1	0.76
	UAT (2.01 to 3.00 seconds)	1.2	0.91
	UAT (3.01^{+} seconds)	1.4	1.1

E.3.2 Configuration Specific and Refinement ZOIs

The configuration specific and refinement ZOIs for medium-voltage switchgear are provided in SI units in Table E-3 and Table E-4 for Zone 1 switchgear and in Table E-5 and Table E-6 for Zone 2 switchgear. The corresponding English unit tables are Table 8-3 and Table 8-4 (Zone 1 switchgear) and Table 8-5 and Table 8-6 (Zone 2 switchgear).

Table E-3
Zone 1 MV Switchgear Configuration Specific and Refinement Level Energetic Phase ZOIs for 15 MJ/m² Target Fragility (SI Units)

Zone 1 – 15 MJ/m² target fragility				Default ZOI dimensions (inclusive of horizontal and vertical-lift circuit breakers)				ZOI dimensions for vertical-lift style circuit breakers			
Fault location	**Power source and duration**	**Arc energy (MJ)**	**End state**	**Left/Right (m)**	**Front (m)**	**Back (m)**	**Top (m)**	**Left/Right (m)**	**Front (m)**	**Back (m)**	**Top (m)**
Normal supply, Secondary supply	UAT - Generator fed	132	GF-15	0.76	0.61	0.91	0.46	0.61	0.61	None	0.46
	SAT - 0 to 2.00 s	68	SAT2-15	0.46	0.30	0.61	0.30	0.15	0.30	None	0.30
	SAT - 2.01 to 3.00 s	101	SAT3-15	0.61	0.46	0.76	0.46	0.46	0.46	None	0.46
	SAT - 3.01 to 4.00 s	135	SAT4-15	0.76	0.61	0.91	0.46	0.61	0.61	None	0.46
	SAT - ≥ 4.01 s	169	SATMAX-15	0.91	0.76	1.1	0.61	0.76	0.76	None	0.61
Supply breaker limited	4 s or less (generic)	135	SBL4-15	0.76	0.61	0.91	0.46	0.61	0.61	None	0.46
	2 seconds or less	68	SBL2-15	0.46	0.30	0.61	0.30	0.15	0.30	None	0.30
	2.01 to 3 seconds	101	SBL3-15	0.61	0.46	0.76	0.46	0.46	0.46	None	0.46
Main bus bar, load breaker	UAT - 0 to 0.5 s + GF	132	GF-15	0.76	0.61	0.91	0.46	0.61	0.61	0.91	0.46
	UAT - 0.51 to 2 s + GF	199	UAT2-15	0.91	0.76	1.1	0.76	0.76	0.76	1.1	0.76
	UAT - 2.01 to 3.0 s + GF	233	UAT3-15	1.1	0.91	1.2	0.91	0.91	0.91	1.2	0.91
	UAT - ≥ 3 s + GF	300	UATMAX-15	1.2	1.1	1.4	1.1	1.1	1.1	1.4	1.1
	SAT - 0 to 2.00 s	68	SAT2-15	0.46	0.30	0.61	0.30	0.15	0.30	0.61	0.30
	SAT - 2.01 to 3.00 s	101	SAT3-15	0.61	0.46	0.76	0.46	0.46	0.46	0.76	0.46
	SAT - 3.01 to 4.00 s	135	SAT4-15	0.76	0.61	0.91	0.46	0.61	0.61	0.91	0.46
	SAT - ≥ 4.01 s	169	SATMAX-15	0.91	0.76	1.1	0.61	0.76	0.76	1.1	0.61

Table E-4
Zone 1 MV Switchgear Configuration Specific and Refinement Level Energetic Phase ZOIs for 30 MJ/m² Target Fragility (SI Units)

Zone 1 - 30 MJ/m² target fragility				Default ZOI dimensions (inclusive of horizontal and vertical-lift circuit breakers)				ZOI dimensions for vertical-lift style circuit breakers			
Fault location	**Power source and duration**	**Arc energy (MJ)**	**End state**	**Left/Right (m)**	**Front (m)**	**Back (m)**	**Top (m)**	**Left/Right (m)**	**Front (m)**	**Back (m)**	**Top (m)**
Normal supply, Secondary supply	UAT - Generator fed	132	GF-30	0.46	0.30	0.61	0.30	0.30	0.30	None	0.30
	SAT - 0 to 2.00 s	68	SAT2-30	0.15	None	0.30	None	None	None	None	None
	SAT - 2.01 to 3.00 s	101	SAT3-30	0.30	0.15	0.46	0.15	0.15	0.15	None	0.15
	SAT - 3.01 to 4.00 s	135	SAT4-30	0.46	0.30	0.61	0.30	0.30	0.30	None	0.30
	SAT - ≥ 4.01 s	169	SATMAX-30	0.61	0.61	0.76	0.30	0.46	0.61	None	0.30
Supply breaker limited	4 s or less (generic)	135	SBL4-30	0.46	0.30	0.61	0.30	0.30	0.30	None	0.30
	2 seconds or less	68	SBL2-30	0.15	None	0.30	None	None	None	None	None
	2.01 to 3 seconds	101	SBL3-30	0.30	0.15	0.46	0.15	0.15	0.15	None	0.15
main bus bar, load breaker	UAT - 0 to 0.5 s + GF	132	GF-30	0.46	0.30	0.61	0.30	0.30	0.30	0.61	0.30
	UAT - 0.51 to 2 s + GF	199	UAT2-30	0.61	0.46	0.76	0.46	0.46	0.46	0.76	0.46
	UAT - 2.01 to 3.0 s + GF	233	UAT3-30	0.76	0.61	0.91	0.61	0.61	0.61	0.91	0.61
	UAT - ≥ 3 s + GF	300	UATMAX-30	0.91	0.76	1.1	0.76	0.76	0.76	1.1	0.76
	SAT - 0 to 2.00 s	68	SAT2-30	0.15	None	0.30	None	None	None	0.30	None
	SAT - 2.01 to 3.00 s	101	SAT3-30	0.30	0.15	0.46	0.15	0.15	0.15	0.46	0.15
	SAT - 3.01 to 4.00 s	135	SAT4-30	0.46	0.30	0.61	0.30	0.30	0.30	0.61	0.30
	SAT - ≥ 4.01 s	169	SATMAX-30	0.61	0.61	0.76	0.30	0.46	0.61	0.76	0.30

Table E-5
Zone 2 MV Switchgear Configuration Specific and Refinement Level Energetic Phase ZOIs for 15 MJ/m² Target Fragility (SI Units)

Zone 2 - 15 MJ/m² target fragility				Default ZOI dimensions (inclusive of horizontal and vertical-lift circuit breakers)				ZOI dimensions for vertical-lift style circuit breakers			
Fault location	**Power source and duration**	**Arc energy (MJ)**	**End state**	**Left/Right (m)**	**Front (m)**	**Back (m)**	**Top (m)**	**Left/Right (m)**	**Front (m)**	**Back (m)**	**Top (m)**
Primary, Secondary, Load & MBB Normal supply, Secondary supply, Faults fed by normal feed	UAT - 0 to 0.50 s + GF	132	GF-15	0.76	0.61	0.91	0.46	0.61	0.61	0.91	0.46
	UAT - 0.51 to 2 s + GF	199	UAT2-15	0.91	0.76	1.1	0.76	0.76	0.76	1.1	0.76
	UAT - 2.01 to 3 s + GF	233	UAT3-15	1.1	0.91	1.2	0.91	0.91	0.91	1.2	0.91
	UAT - ≥ 3 s + GF	300	UATMAX-15	1.2	1.1	1.4	1.1	1.1	1.1	1.4	1.1
	SAT - 0 to 2.00 s	68	SAT2-15	0.46	0.30	0.61	0.3	0.15	0.30	None	0.30
	SAT - 2.01 to 3.00 s	101	SAT3-15	0.61	0.46	0.76	0.46	0.46	0.46	None	0.46
	SAT - 3.01 to 4.00 s	135	SAT4-15	0.76	0.61	0.91	0.46	0.61	0.61	None	0.46
	SAT - ≥ 4.01 s	169	SATMAX-15	0.91	0.76	1.1	0.61	0.76	0.76	None	0.61
Zone 1 supply breaker limited	4 s or less (generic)	135	SBL4-15	0.76	0.61	0.91	0.46	0.61	0.61	None	0.46
	2 seconds or less	68	SBL2-15	0.46	0.30	0.61	0.30	0.15	0.30	None	0.30
	2.01 to 3 seconds	101	SBL3-15	0.61	0.46	0.76	0.46	0.46	0.46	None	0.46
Zone 2 supply breaker interrupts	2 seconds or less	68	SBL2-15	0.46	0.30	0.61	0.30	0.15	0.30	None	0.30

Table E-6
Zone 2 MV Switchgear Configuration Specific and Refinement Level Energetic Phase ZOIs for 30 MJ/m² Target Fragility (SI Units)

Zone 2 - 30 MJ/m² target fragility				Default ZOI dimensions (inclusive of horizontal and vertical-lift circuit breakers)				ZOI dimensions for vertical-lift style circuit breakers			
Fault location	**Power source and duration**	**Arc energy (MJ)**	**End state**	**Left/Right (m)**	**Front (m)**	**Back (m)**	**Top (m)**	**Left/Right (m)**	**Front (m)**	**Back (m)**	**Top (m)**
Primary, Secondary, Load & MBB Normal supply, Secondary supply, Faults fed by normal feed	UAT - 0 to 0.50 s + GF	132	GF-30	0.46	0.30	0.61	0.30	0.30	0.30	0.61	0.30
	UAT - 0.51 to 2 s + GF	199	UAT2-30	0.61	0.46	0.76	0.46	0.46	0.46	0.76	0.46
	UAT - 2.01 to 3 s + GF	233	UAT3-30	0.76	0.61	0.91	0.61	0.61	0.61	0.91	0.61
	UAT - ≥ 3 s + GF	300	UATMAX-30	0.91	0.76	1.1	0.76	0.76	0.76	1.1	0.76
	SAT - 0 to 2.00 s	68	SAT2-30	0.15	None	0.30	None	None	None	None	None
	SAT - 2.01 to 3.00 s	101	SAT3-30	0.30	0.15	0.46	0.15	0.15	0.15	None	0.15
	SAT - 3.01 to 4.00 s	135	SAT4-30	0.46	0.30	0.61	0.30	0.30	0.30	None	0.30
	SAT - ≥ 4.01 s	169	SATMAX-30	0.61	0.61	0.76	0.30	0.46	0.61	None	0.30
Zone 1 supply breaker limited	4 s or less (generic)	135	SBL4-30	0.46	0.30	0.61	0.30	0.30	0.30	None	0.30
	2 seconds or less	68	SBL2-30	0.15	None	0.30	None	None	None	None	None
	2.01 to 3 seconds	101	SBL3-30	0.30	0.15	0.46	0.15	0.15	0.15	None	0.15
Zone 2 supply breaker interrupts	2 seconds or less	68	SBL2-30	0.15	None	0.30	None	None	None	None	None

E.4 Non-Segregated Bus Duct Switchgear ZOIs

The non-segregated bus duct ZOIs in SI units are provide in Table E-7. The corresponding English unit table is Table 9-2.

Table E-7
Non-segregated Bus Duct ZOIs (SI units)

End state	Power transformer and fault clearing time	Bus duct enclosure material and fragility			
		Steel enclosure with 15 MJ/m² target fragility (m)	Steel enclosure with 30 MJ/m² target fragility (m)	Aluminum enclosure with 15 MJ/m² target fragility (m)	Aluminum enclosure with 30 MJ/m² target fragility (m)
BDSAT0.5 BDSBL0.5	SAT - 0 to 0.50 s	0	0	0	0
BDSAT1 BDSBL1	SAT - 0.51 to 1.00 s	0	0	0.15	0.15
BDSAT1.5 BDSBL1.5	SAT - 1.01 to 1.50 s	0.15	0.15	0.30	0.30
BDSAT2 BDSBL2 BDLV	SAT - 1.51 to 2.00 s Supply breaker limited (2 s) Low voltage	0.30	0.15	0.46	0.30
BDSAT3 BDSBL3	SAT- 2.01 to 3.00 s	0.61	0.30	0.76	0.46
BDSAT4 BDSBL4	SAT - 3.01 to 4.00 s Supply breaker limited (4 s)	0.76	0.46	0.91	0.61
BDSATMAX	SAT - ≥ 4.01 s	0.91	0.61	1.07	0.61
BDGenFed	UAT - 0 to 0.5 s	0.76	0.46	0.91	0.61
BDGF2	UAT - 0.51 to 2 s	1.07	0.61	1.22	1.07
BDGF3	UAT - 2.01 to 3 s	1.22	1.07	1.22	1.07
BDGFMAX	UAT - ≥ 3 s	1.37	0.91	1.52	0.91

APPENDIX F

TARGET FRAGILITY FOR EQUIPMENT TYPES NOT ADDRESSED IN THE FRAGILITY REPORT

F.1 Introduction

During the development of target fragility thresholds for electrical cables, bus ducts, and electrical cable protective features in the HEAF fragility report [15], the working group deferred the characterization of the failure threshold(s) and guidance for equipment that can also be a fire PRA target. The list of equipment is:

- Cable bus ducts, cable wireways, and junction boxes
- Battery chargers
- Dry-type transformers
- Inverters
- Load centers
- Motor control centers
- Motor-generator sets
- Switchgear

The purpose of this appendix is to develop guidance based on the current state-of-knowledge for equipment listed above. This guidance is intended for equipment in proximity to the HEAF source. This appendix does not address integral equipment immediately adjacent to the HEAF source, such as a vertical section of switchgear next to the failing section (see Section 6 for treatment).

F.2 Background

F.2.1 Equipment Definitions

Most of the electrical equipment is well-defined. The following definitions are provided to specific cable-routing related equipment:

Cable bus duct: An assembly of insulated conductors with fittings and conductor terminations in a completely enclosed, ventilated protective metal housing. The assembly is designed to carry fault current and to withstand the magnetic forces of such current. Cable bus shall be permitted at any voltage or current for which the spaced conductors are rated. Cable bus is ordinarily assembled at the point of installation from components

furnished or specified by the manufacturer in accordance with instructions for the specific job [51].

Cable wireway: Sheet-metal troughs with hinged or removable covers for housing and protecting electric wires and cable and in which conductors are laid in place after the wireway has been installed as a complete system [51] Sometime referred to as “cable troughs.”

Junction box: A fully enclosed metal box containing terminals for joining or splicing cables. For a complete definition of a junction box, please refer to FAQ 13-0006 [52].

F.2.2 Testing

Between 2014 and 2016, the NRC performed HEAF experiments as part of an international program to better understand the HEAF phenomena and confirm existing fire PRA guidance [1,2]. As part of the program, several experiments involving aluminum resulted in the deposition of a conductive white material on the surfaces of the test cell and KEMA Labs power supply bus bars. The material deposition decreased the insulation resistance between the power supply phases and in at least one instance required significant decontamination efforts to return the power supply to service [7]. The electrical system impacted was the uninsulated medium voltage power system (bus bars) in the KEMA Labs test cell. This open air configuration of bus bars are not typical in nuclear power plants.

Based on the observations from the OECD program, the NRC fielded additional experimentation during a subsequent series of experiments [53] to evaluate, in part, the conductive nature of the HEAF byproduct. The fielded instrumentation included air breakdown strength, air conductivity, and surface deposit analysis. These instruments were placed at various locations (between 1.5 m [5 ft] and 4.0 m [13 ft] and orientations (typically on the axis of the arc jet) to evaluate the HEAF environment over a diverse range of conditions. These sensors were placed in open air to evaluate the phenomena in what is believed to be a conservative manner. The open air configuration provides direct exposure to the HEAF byproducts, whereas in the field, most electrical equipment is housed within electrical enclosures with varying ventilation configurations. Housing the electrical equipment provides a barrier between the HEAF byproduct and the targeted electrical equipment not present in the experimental design. As such, the approach taken was to promote the occurrence of the phenomena. If the phenomena is not observed in this configuration, then a high confidence of similar results in a more typical enclosed environment would exist. If the complement of this outcome were to occur, then more realistic testing would be required to better understand the influence on the phenomena. The results [53] from the open air configuration concluded that,

> For the experimental conditions and locations investigated, the results indicated that HEAF byproduct dispersed into the air causing equipment arc over, referred to as flashover, was unlikely at the measurement locations. This conclusion may not hold for locations closer to the source.
>
> Surface conductivity measurements of HEAF byproduct surface deposition showed a decrease in resistance compared to pre-experimental conditions. For the experimental conditions and locations investigated, the result indicated that an impact on plant safety equipment is not likely. The impact

of surface deposition, however, is highly dependent on the design, configuration, location, and sensitivity of the equipment.

The results from the measurements taken during testing suggest that the change in air-particulate conductivity due to the effluent from the HEAF does not cause subsequent equipment failures from flashovers. The test results were not definitive to completely exclude the surface conductivity concern.

A higher level of confidence can be assured for actual plant electrical equipment as target conductors are surrounded by enclosures with limited ventilation or ventilation configurations that limit the ingress of the HEAF byproduct. However, the measurement results are dependent on the location and configuration, as well as the level of conductivity to cause equipment failure from changes in surface conductivity. There is limited understanding on the applicability of this failure mode in the field.

F.2.3 Operating Experience

From a review of HEAF operating experience, there are no reported events where targets near the HEAF initiator were breached as a result of the HEAF thermal energy or failed as a result of HEAF byproduct deposition. There have been two reported HEAF events where combustion products from the post-HEAF ensuing fire (soot, black smoke) migrated through the switchgear and resulted in operation of a live bus protection (i.e., breaker trip). This phenomena of heavy smoke serving as a medium for arc propagation is referred as flashover in this appendix. The two events are summarized below.

FEDB 50935:

The NRC Special Inspection Report [54] documents that, “Soot and combustion products from the fire caused an unexpected phase-to-phase fault on non-segregated bus duct conductors between open bus-tie breaker BT-1B4A and island bus 1B3A-4A.” Specifically, “Combustion products from the fire in load center 1B4A migrated across normally open bus-tie breaker BT-1B4A into the non-segregated bus duct, shorting all three electrical phases.” NRC Information Notice 2017-04 also states that it was the combustion products from the fire that caused the second 1B3A-4A fault [6].

The event showed heavy deposit of soot and black smoke from the ensuing fire that migrated throughout the load center. The load center outer enclosure was not breached and there was no evidence of grey or white residue (i.e., aluminum oxide) observed or reported outside of the load center’s bus supply circuit breaker outer enclosure.

The language of the NRC Special Inspection Report quoted above can be misinterpreted as seeming like the flashover generated by the soot and combustion byproduct occurred in the non-segregated bus duct. However, the flashover occurred across the bus duct connection points to the bus-tie breaker within the switchgear. This connection point was three vertical sections from where the HEAF initiated.

FEDB 106:

This is the only other event where the combustion products from the fire caused a fault, in this instance, on the reserve auxiliary transformer exposed energized bus stabs located two circuit breaker cubicles away from the bus supply circuit breaker cubicle.

Per Information Notice 2002-01, the fault was caused by failure of the 4.16 kV breaker's C phase main contacts to fully close. This resulted in arcing and a production of a thick, dark ionized smoke. The breaker was a Brown Bovari Type HK three pole, medium-voltage ac power circuit breaker rated for 3000 amps (continuous) and 350 MVA (interrupting). Offsite power was lost when ionized smoke (which is conductive) diffused through holes (through which wires passed) and conduits between adjacent cubicles. This shorted the energized incoming terminals of the offsite power supply from the reserve auxiliary transformer. The fault blew open the cubicle door of the offsite supply circuit breaker and blew off an insulating boot that covered the A phase bus bar. The high voltage supply breakers upstream of the reserve auxiliary transformer opened to clear the fault. This interrupted non-vital offsite power to the unit.

F.2.4 Summary of OE insights

There are no reported HEAF events that caused secondary consequential failure of equipment outside of the HEAF initiator due to thermal damage or direct HEAF jet byproducts for equipment listed in F.1. There are two HEAF events that reported secondary consequential faults from thick, dark ionized smoke. These faults occurred within the set of interconnected vertical sections/enclosures within a switchgear or load center bus. The OE does not demonstrate subsequent failures of nearby equipment as a direct result of the HEAF generated byproduct.

F.3 Discussion

The evidence presented in Section F.2 suggest that subsequent failure of electrical equipment in the vicinity of the HEAF due to the particulate concern is not likely. In addition, air conductivity and air breakdown measurements taken during testing do not indicate conditions suitable to induce electrical failure. Although conductivity measurements combined with the failed testing facility equipment (exposed, open air power conductors) may suggest potential equipment failures, the distinct differences between the test equipment and the field application (enclosed conductors), correlation of the test result to equipment response does not support a firm conclusion. Therefore, testing results and insights from OE are interpreted as suggesting that equipment failure by particle interaction is dependent on the specific field configuration and event characteristics. The range of configurations that may influence equipment failure caused by HEAF byproducts are difficult to predict. Based on the information known to the working group, at this time there is no empirical or operational data to support development of a ZOI for surface conductivity until more data (testing or OE) is available to prove otherwise.

The thermal hazard posed by a HEAF is the most likely mechanism to induce failure to targets. The thermal hazard has the potential to breach enclosed equipment. Once enclosure breach occurs, the components within the target equipment are directly exposed to the HEAF. The analysis performed in the fragility report [15] evaluated this failure progression for bus ducts, electrical cable conduit, and electrical cable trays with bottom and top covers. From that analysis, the working group provided specific failure thresholds for enclosure materials (steel or aluminum) and electric cable characteristics (cable jacket type).

One difference between the targets evaluated in the target fragility report [15] and the targets identified here is ventilation. Bus ducts have limited ventilation or breathers, and cable conduits are not ventilated. Ventilation configurations for the electrical equipment identified can vary substantially from that assumed in the fragility report [15]. Switchgear, load centers, motor control centers, dry-type transformers, motor-generator sets, battery chargers, and inverters are

commonly ventilated to provide cooling to the equipment contained within the electrical enclosure. Depending on the design, cable bus ducts can be ventilated. The type, location, and configuration of the electrical enclosure ventilation varies by manufacturer and by equipment type. Some equipment exhibits large and open ventilation and the components within the enclosure are visible through the vents, others have more limited and restrictive ventilation configuration. Because of these variations in electrical enclosure ventilation openings, the working group consensus is that vents could impact the conclusions from previous fragility evaluations [15].

Based on this information, the working group developed a qualitative approach to use existing fragility thresholds for equipment where limited ventilation exists and to use a more conservative fragility threshold for equipment with open ventilation. The criteria for determining the threshold are primarily dependent on whether ventilation openings of the electrical enclosures will limit the exposure along with the ZOI estimates developed by the working group. Detail on this approach is presented in Section F.4.2.

F.3.1 Cable Bus Ducts, Cable Wireways and Electrical Junction Boxes

In target fragility report [15] heat transfer calculations for electrical raceway conduit and electrical raceway cable tray covers were conducted to evaluate the thermal shielding and protection provided by the raceway systems. That report identified that the raceway systems provide some initial protection from the arcing phase of the HEAF, the sustained elevated temperature of the raceway system (conduit or tray covers) over an extended period of time acts as an additional radiation source contributing to cable thermal damage. Based on this and other insights documented in the fragility report, the working group concluded that there was not enough information to determine any recommended change to the current cable failure criteria.

Cable bus ducts, cable wireways (troughs) and electrical junction boxes have attributes that are similar to the cable trays with covers and cable conduits previously evaluated by the working group [56]. As such the working group recommends that the fragility thresholds developed for cable protective devices in the fragility report [15] can be extended to cable bus ducts, cable wireways, and junction boxes.

F.3.2 Electrical Equipment

Switchgear, load centers, motor control centers, dry-type transformers, battery chargers, inverters, and motor-generator sets are present in commercial nuclear power plants in a variety of shapes, sizes and configurations. From an equipment failure/damage point of view, two design attributes influence the impact a HEAF will have on electrical equipment targets, namely; ventilation and enclosure material.

All electrical equipment will have some configuration of ventilation to provide for the circulation of external air through the enclosure to remove excess heat. In naturally ventilated enclosures, it is common to find ventilation at the top and bottom elevations to allow for buoyance and stack principles to effectively create a unidirectional flow of air. In mechanically ventilated enclosures, there is typically one or more fans that pull air out of or into the enclosure. In some designs, air ductwork within the enclosure is also used to allocate the air distribution within the enclosure and minimize hot spots. Vents can be located on any side of the enclosure, including the top and bottom. There are no standards that define the design configuration of enclosure ventilation, other than to limit ventilation opening size to prevent objects from penetrating the

enclosure and possibly contacting live parts [56] or to ensure ambient thermal conditions are met [57].

From the information presented to the working group and their discussion, the design of the ventilation system will have a primary influence on the ability of the HEAF thermal energy to enter the enclosure and potentially cause equipment failure. Limited ventilation will minimize the heat transfer from convective and conductive heating, while open ventilation will not provide the same level of shielding from these heating mechanisms and allows possible direct thermal radiation exposure. Review of field installations identified a variety of common configurations, which are summarized in Sections F.3.2.1 and F.3.2.2. These configurations are presented as illustrative examples to help categorize the ventilation configuration for electrical enclosures found in the field and correlate fire PRA guidance on the treatment of assumed equipment failure/damage. Additionally, many types of electrical enclosures have ventilation on the top of the enclosure. Vents on the top of the enclosure should also be considered (particularly for the bus duct HEAF waterfall).

F.3.2.1 Designs that Minimize Exposure (Limited Ventilation)

F.3.2.1.1 Louver Vents

Louver vents provide openings in the enclosure, while maintaining protection from accidental entry of dirt, dripping water, or foreign objects. Louvers are press formed from sheet metal. This results in a raised window with protection from three sides and an opening on one side (bottom). Figure F-1 provides photographs of electrical enclosures with louver vents. Based on the limited entry provided by louver vents, the working group considers equipment with louver vents as “limited ventilation.” Note that louvered vents would not require filters (see section F.3.2.1.2) to be classified as “limited ventilation.”

Figure F-1
Photos of Louvers on Enclosures

F.3.2.1.2 Filtered Vents

In certain applications, air filters (typically replaceable or reusable) or fine mesh screens (typically permanent) are used in addition to the vent. These provide an added layer of protection from any contaminants external from entering the enclosure. For the HEAF concern these are viewed as adding a layer of protection. As such the working group considers vents with filters as a “limited ventilation” configuration. Examples are presented in Figure F-1 through Figure F-5

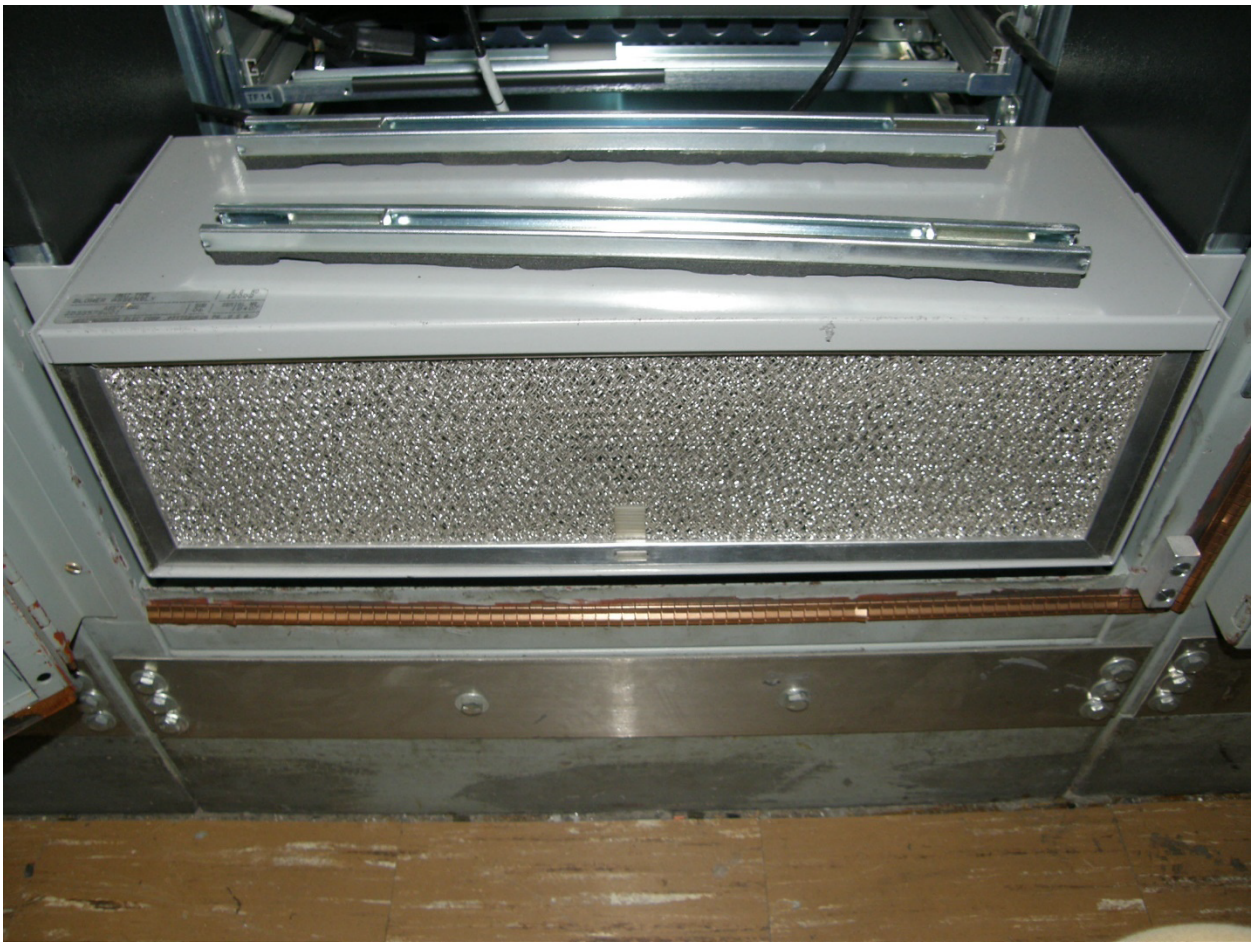

Figure F-2
Internal Filter (shown with door open, filter surface area covers door vent area)

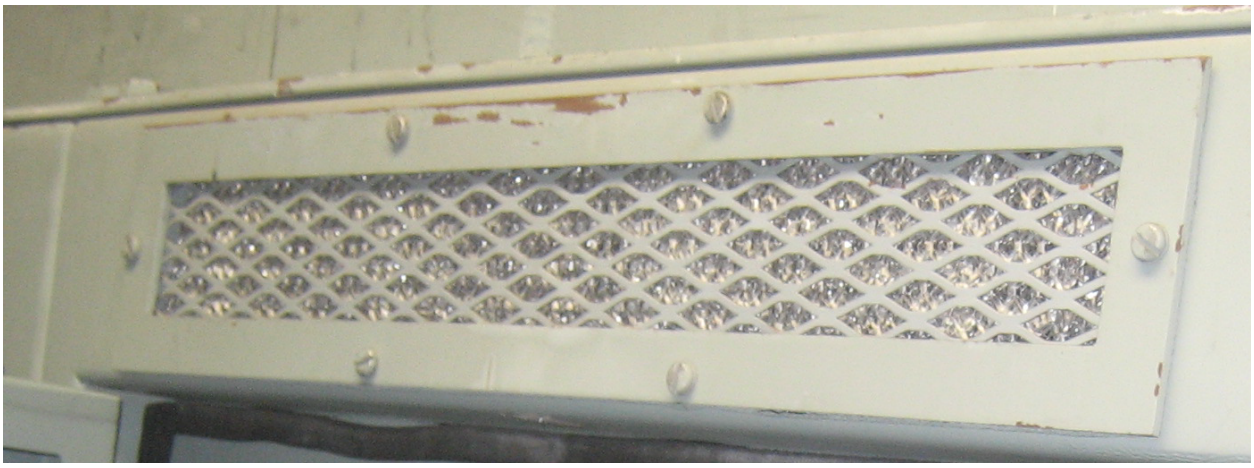

Figure F-3
Expanded Metal Vents with Filters

Figure F-4
External Filter (shown on top of enclosure)

Figure F-5
Vent Screen (on internal side of door vent)

F.3.2.1.3 Other Configurations

The guidance on configurations that minimize the exposure have been limited to specific design features in openings and vents, which should constitute the majority of conditions encountered in the field. Other relatively small openings (e.g., drill holes, holes with missing bolts, gaps in steel enclosure at seams) or sizes smaller than those of an individual opening within punched or extended vents (as described in the Section F.3.2.1) should be treated as a design that impedes ingress.

F.3.2.2 Designs that Do Not Impede Ingress

F.3.2.2.1 Open Punched and Expanded Metal Vents

Unlike louver vents that do not remove material during the manufacturing process, open vents created by punching metal from the sheet provide a less efficient means to limit the ingress of HEAF energy to components within the enclosure. In many instances, the contents of the enclosure are viewable from the exterior of the enclosure. As such, the working group concludes that open vents may not limit the thermal energy from a HEAF impacting the target equipment and should be classified as “open ventilation.” Figure 11-65 though Figure 11-6 provide photographs of open vents for different configurations. These examples are not inclusive of all designs found in the field.

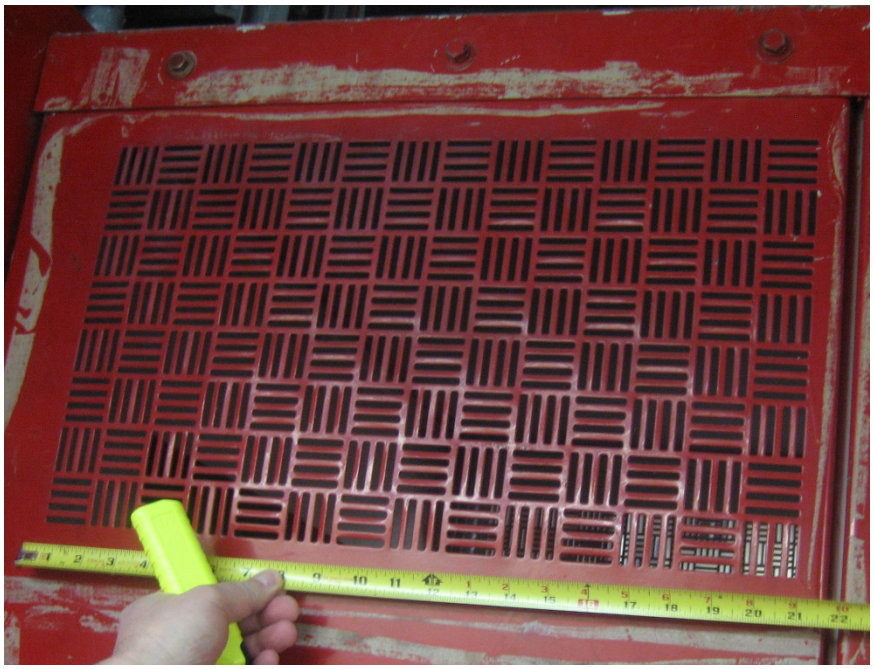

Figure F-6
Photo of Open Parquet Vents (switchgear)

Figure F-7
Photo of Open Rounded Rectangular Vent (LV switchgear)

Figure F-8
Photo of Open Rectangular Vents (inverter)

Expanded metal vents are similar to open punched vents, except the manufacturing process is different. Here the material is not removed from the sheet, but instead a break expands the material to make the opening. While the manufacturing process may differ, the open area configuration is similar to the open punched vents and is classified accordingly, “open ventilation.” Figure 11-7 and Figure F-8 show examples of expanded metal vents.

Figure F-9
Photo of Expanded Metal Vents on Air Cooled Transformer

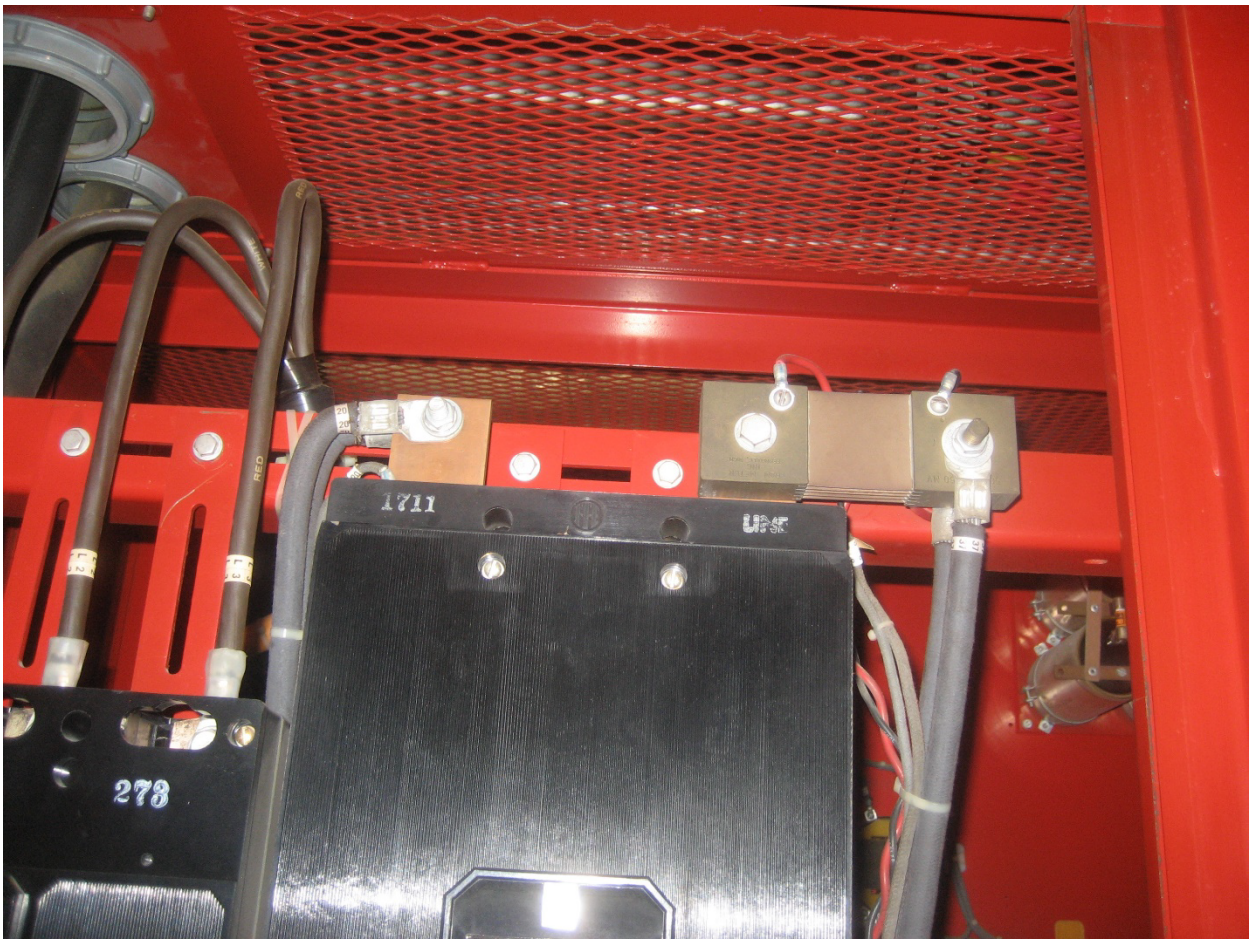

Figure F-10
Photo of Expanded Metal Vent on Top of Switchgear Enclosure Viewed from Inside Enclosure

F.3.2.2.2 Non-Enclosed Equipment

Although rare, there are configurations where electrical equipment is not contained within an electrical enclosure. These configurations are more likely to be in low voltage communication or instrumentation rooms than in rooms containing electrical distribution equipment. However, if there are electrical equipment targets not within an enclosure, then it should be considered "open ventilation" and subjected to the impact of the HEAF thermal damage. Figure 11-9 provides a photograph of an open air instrumentation rack.

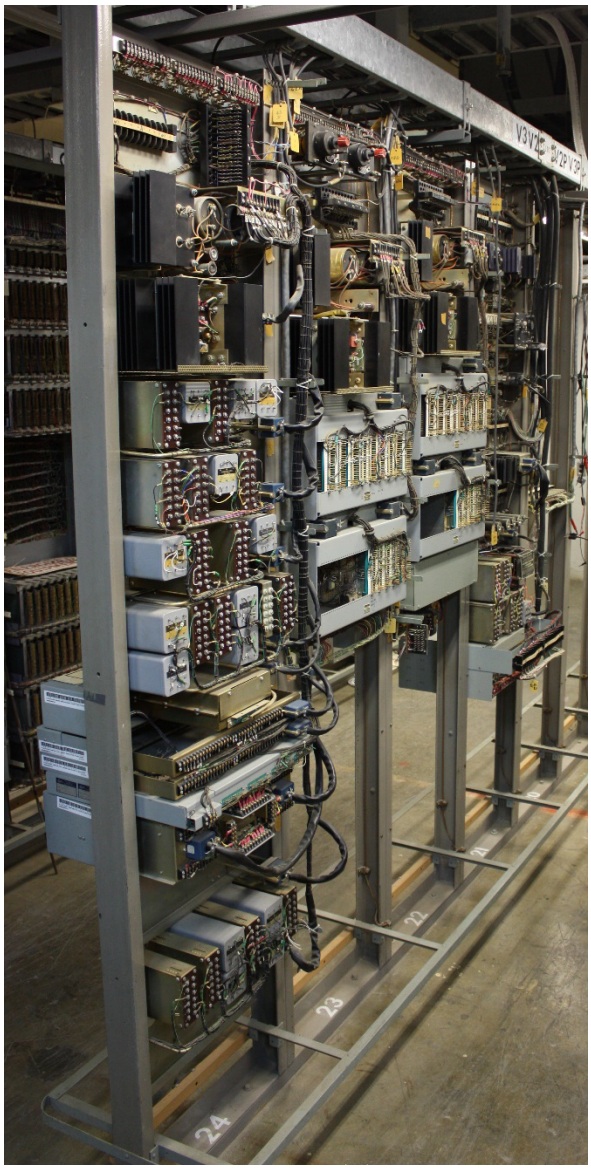

Figure F-11
Open Air Instrumentation (not enclosed)

F.4 Guidance

F.4.1 Cable Bus Ducts, Cable Wireways, and Junction Boxes Targets

Cable bus ducts, cable wireways, and junction boxes should be treated consistent with the treatment of jacketed thermoplastic and jacketed thermoset cables consistent with Section 4 of RIL 2022-01 [15]). See Section F.3.1 for the technical basis.

F.4.2 Other Electrical Equipment Targets

The following guidance is provided for battery chargers, dry transformers, inverters, load centers, motor control centers, motor generator sets, and switchgear.

1. Determine the scenario-specific ZOI by identifying the HEAF location (i.e., supply breaker elevation, vertical section(s), length of bus duct, bus duct transition point, etc.) and the energetic blast ZOI (Section 7, 8 or 9).
2. As a bounding and conservative approach (this step does not require the characterization of ventilation/openings), use the 15 MJ/m^2 threshold to capture the potential damage of non-cable fire PRA targets within the ZOI. This includes electrical enclosures, electrical enclosures with cable endpoints, or other equipment identified in Section F.1. For this additional equipment damage, do not postulate sustained ignition.
3. For further refinements of the results obtained in Step 2, the analyst can review the equipment related targets and determine if the venting contained within the ZOI is considered as “limited ventilation” or “open ventilation.” The location of the venting relative to the HEAF ignition source can be also considered in this step (i.e., is or is not in the “line of sight” with the HEAF ignition source). If considering vent location, each vent in the enclosure should be evaluated. The enclosure should be modeled assuming the vent configuration with potential for allowing the most damage (if multiple vents are within the line of sight).
    a. “Limited ventilation” refers to equipment that is closed (e.g., no vents), has vents with louvers, or filters. Enclosures with vents that are not in the “line of sight” of the HEAF are considered limited ventilation.
    b. “Open ventilation” refers to equipment with vents exposed (i.e., in the “line of sight”) to the HEAF with open punched vents, expanded metal vents, or non-enclosed equipment. These openings may allow the ingress of heat/particles from the HEAF.
4. The fragility thresholds for limited ventilation and open ventilation for equipment defined in Section F.1 are as follows:
    - Limited ventilation:
        - Electrical failure/damage for electrical equipment within steel enclosures is 30 MJ/m^2.
        - Electrical failure/damage for electrical equipment within aluminum enclosures is 15 MJ/m^2.
        - No sustained ignition is assumed, concurrent or after the HEAF.
    - Open ventilation:
        - Electrical failure/damage for electrical equipment within any metal enclosures is 15 MJ/m^2.
        - No sustained ignition is assumed, concurrent or after the HEAF.

APPENDIX G
EXAMPLES

Five examples demonstrate aspects of the methodology in different scenarios.

G.1 Example 1, NUREG/CR-6850 Medium Voltage Switchgear

The example from Appendix M of NUREG/CR-6850 [1] is assessed using the methodology in NUREG/CR-6850 and the updated methodology presented in this report. The information provided in the example includes the following:

- The source is a MV switchgear.
- There are two targets
    - A stack of three cable trays above the cabinet
        - The first target is the first tray located 0.9 m (3 feet) above the cabinet
        - The second target is in the third tray

Additional information is necessary to apply the revised methodology, defined for this example as follows:

- The switchgear is located in Zone 1 (See Section 3.1)
    - A split fraction of 0.86 is used to apportion the Bin 16.b generic fire ignition frequency for Zone 1 switchgear (See Section 5.2.2)
- There are six (6) Zone 1 switchgear banks, including the bank in which the HEAF is postulated
- The normal supply for the switchgear is the UAT
    - The fault clearing time is 1.5 seconds
- The secondary supply for the switchgear is the SAT
    - The fault clearing time is 1 second
- There is a generator circuit breaker
- The targets are subject to thermoplastic damage criteria
- The target cable tray stack runs above both the normal and secondary supply vertical sections (see Figure 11).

G.1.1 NUREG/CR-6850 Methodology

When following NUREG/CR-6850 Appendix M, the first target tray is assumed to ignite concurrent with the arcing fault as it is located within the 5 foot vertical energetic ZOI. The second tray in the stack which is not a PRA target and which may be in the HEAF ZOI, does not

immediately ignite because ignition has already occurred in the first tray. (This tray ignites 4 minutes after the first tray and third tray in the stack (the second target in this example) ignites and is assumed damaged 3 minutes later (7 minutes post-HEAF).

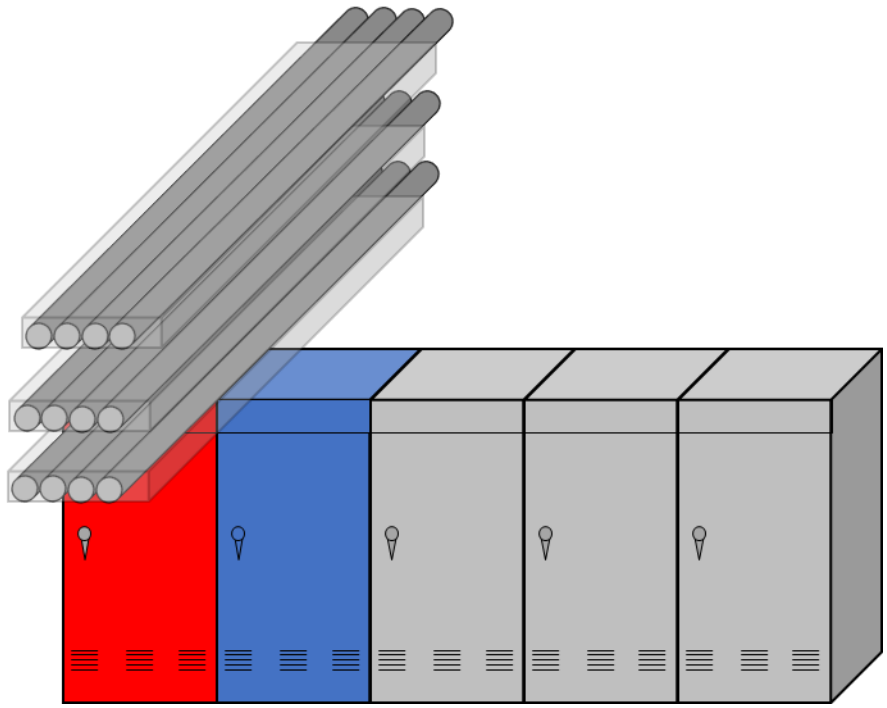

Figure G-1
Example 1: Switchgear Bank, Normal Supply in Red, Secondary Supply in Blue

The frequency for the scenario that damages the first target is determined as:

$$(\lambda_{16.b}) \cdot W_{is}$$

Where the ignition source weighting factor, W_{is}, is the number of vertical sections included in the scenario divided by the number of medium voltage switchgear vertical sections at the plant.

The first target tray is damaged by the energetic phase of the HEAF, and no non-suppression probability can be credited. A non-suppression probability can be applied for each end state considering the second tray, the third tray, and any additional targets further than the third tray in the stack. Each of these end states has a conditional probability of occurrence. The conditional probability of each end state must sum to 1.0. Assume, the non-suppression probabilities are determined following the approach in NUREG/CR-6850. Table 0-1 summarizes the scenario values. The cumulative suppression probability P_s is calculated as 1 minus the non-suppression probability (NSP). The conditional probability of end state 1, 0, is the probability that suppression occurs at 0 minutes and damage is limited to the ignition source only. During the subsequent interval, after 0 minutes but before 4 minutes (end state 2), the probability of suppression is the cumulative probability of suppression at 4 minutes minus the cumulative probability of suppression at 4 minutes, 0.08 – 0.0 = 0.08. Therefore, there is an 8% likelihood that damage is limited to the second tray above the ignition source. A similar calculation applies to the third tray, (0.15 – 0.08) = 0.07. The final interval receives the remaining probability, 1 – (0.07+0.08) = 0.85.

There is an 85% chance of the full consequences occurring. The remaining 15% of the probability is apportioned among the second and third end states. Recall, there is no probability associated with suppression of the first target which is immediately damaged along in the energetic phase.

Table 0-1
Example 1: Conditional Non-Suppression Probabilities

End state	Elapsed time after fire ignition (minutes)	Estimated non-suppression probability, *NSP*	Cumulative suppression probability, P_s = 1-*NSP*	Formula for the conditional probability of the scenario	Conditional probability of the scenario
Damage limited to tray 1	0	1	0	$P_s(0)$	0
Damage limited to tray 2	4	0.92	0.08	$P_s(4) – P_s(0)$	0.08
Damage limited to tray 3	7	0.85	0.15	$P_s(7) – P_s(4)$	0.07
Further targets (15 minutes)	>7	0.68		*Remaining Probability*	0.85

G.1.2 Screening Approach for Medium Voltage Switchgear

Following the screening approach in Section 8.4, the ZOI for a UAT (normal supply) with a fault clearing time of 1.5 seconds bounds the ZOI for the secondary supply (SAT with a fault clearing time of 1 second). The energetic phase of the HEAF ZOI for the UAT with a FCT of 1.5 seconds is 3.5 feet (See

Table 8-2) for thermoplastic targets. The first target (cable tray) located 3 feet above the switchgear is within the energetic phase of the HEAF ZOI. This tray is damaged but does not ignite.

The ensuing fire immediately reaches a peak heat release rate of 170 kW (from Section 6.5.1). The first cable tray is damaged by the flame ZOI, and bulk ignition of the tray occurs within 1 minute [47]. The second target (the third cable tray in the stack) is damaged and ignited at 8 minutes (1 + 4 + 3).

As discussed in Section 5.2.2, 86% of the generic fire ignition frequency for medium voltage switchgear is apportioned to the switchgear in Zone 1. Additionally, the ignition source weighting factor is determined using the Zone 1 population of switchgear (1 out of 6). The frequency for the scenario is:

$$(\lambda_{16.b}) \cdot W_{is} \rightarrow (1.98E-03 \cdot 0.86) \cdot \left(\frac{1}{6}\right) = 2.84E-04$$

G.1.3 Zone 1 Configuration Specific ZOI for Medium Voltage Switchgear

Section 8.5 describes more detailed modeling (if the screening methodology requires additional realistic or detailed modeling). Figure 8-5 (shown below as Figure 11-10) indicates multiple scenarios can be developed (depending on the level of granularity needed). The ignition frequency for each scenario is apportioned between the normal supply vertical section, the secondary supply vertical section, and the load sections as shown in Figure 8-4 (shown below as Figure 11-)

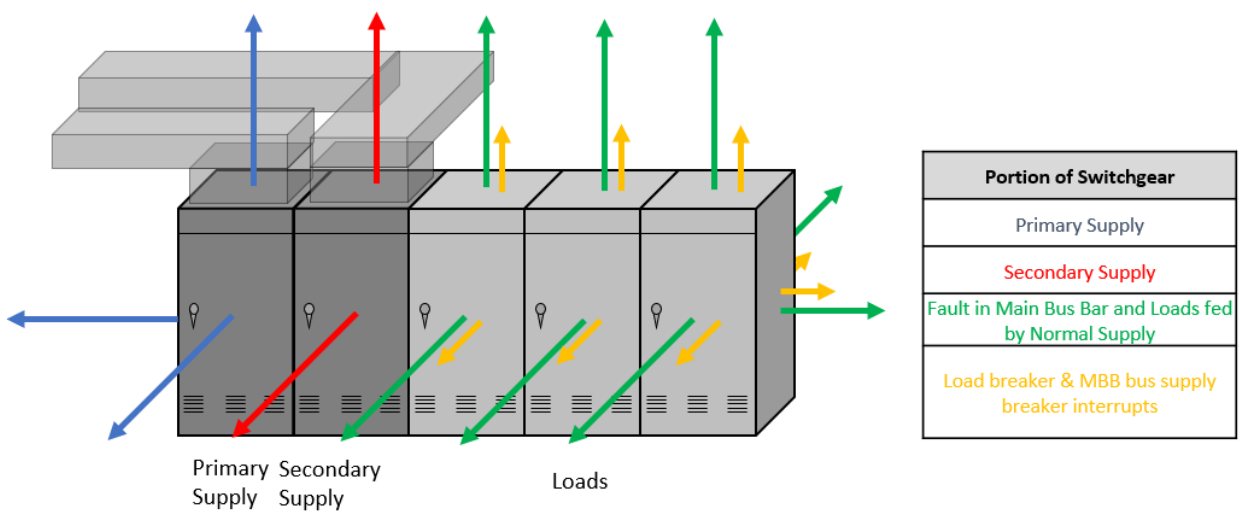

Figure G-2
Zone 1 MV Switchgear Configuration Specific ZOIs

For this example, the resulting scenario ignition frequencies are calculated as:

- Normal (primary) supply: $GCB \cdot (\lambda_{16.b} \cdot 0.86 \cdot W_{is}) \cdot 0.57 = 3.5E-05 \cdot (2.84E-04) \cdot 0.57 = 5.66E-09$
    - From Section 5.3.1, plants with a generator circuit breaker (GCB), can modify the frequency by 3.5E-05 for end states where the GCB can interrupt the fault (Zone 1 supply).

- If there was no GCB, the scenario frequency would be: $(2.84E-04) \cdot 0.57 = 1.62E-04$

- Secondary supply: $(\lambda_{16.b} \cdot 0.86 \cdot W_{is}) \cdot 0.28 = (2.84E-04) \cdot 0.28 = 7.95E-05$
- Loads, fault in load breaker or MBB fed via "stuck" normal supply breaker: $(\lambda_{16.b} \cdot 0.86 \cdot W_{is}) \cdot 0.15 \cdot 0.09 = (2.84E-04) \cdot 0.01 = 3.83E-06$
- Loads, fault in MBB with Zone 1 bus supply breaker interrupting: $(\lambda_{16.b} \cdot 0.86 \cdot W_{is}) \cdot 0.14 = (2.84E-04) \cdot 0.15 \cdot 0.91 = 3.87E-05$

Next, the ZOIs associated with these scenarios are selected to determine if the target trays are impacted by the energetic phase of the HEAF.

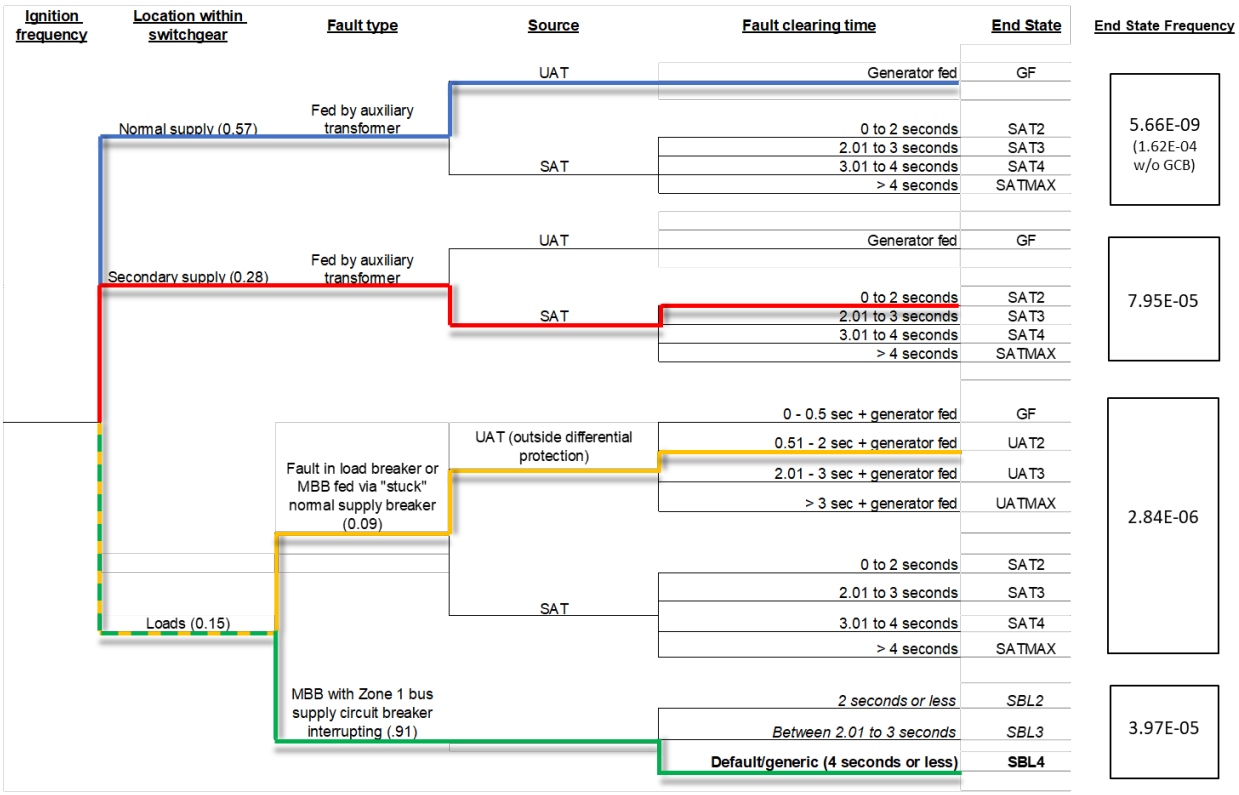

Figure G-3
Example 1, Zone 1 Configuration Specific HEAF Event Tree

Table 8-3 lists the configuration specific ZOIs for the energetic phase for targets subject to 15 MJ/m^2 fragilities (including thermoplastic cables). For the normal supply, the UAT, the end state is generator fed (since differential protection is assumed to be reliable in the Zone 1 supply). The generator fed energetic ZOI is 1.5 feet vertically. The lowest target (first cable tray) is outside the ZOI of the arcing fault at an elevation of 3 feet. However, the first cable tray is within the flame region for the post-HEAF ensuing fire. The first cable tray ignites within 1 minute with propagation to the third cable tray at 8 minutes (1 + 4 + 3).

For the secondary supply (SAT), a FCT of 1 second results in a vertical energetic ZOI of 1 foot (SAT2). The lowest target (first cable tray) is outside the energetic ZOI at 3 feet. The first cable tray is within the flame region for the ensuing fire. The ensuing fire growth in the secondary

supply section is identical to the primary supply (first tray within 1 minute and the third tray at 8 minutes).

For the load vertical sections, the targets are located outside the energetic phase ZOI (UAT2 and SBL4). Note, while the load sections may have a horizontal component to their ZOI, this impact is limited to the horizontal direction below the top plane of the cabinet section (see Figure 8-1).

As discussed in Section 6.5.1, arc energies greater than 101 MJ, postulate fire spread to adjacent vertical sections. Therefore, the fire modeling for the end states on the normal supply (end state GF), the loads, fault in load breaker of MBB fed via “stuck” normal supply breaker (end state UAT2), and loads, MBB with Zone 1 bus supply breaker interrupting (end state SBL4) should analyze the heat release rate of adjacent vertical sections in the scenario progression. Scenario progression on end state SAT2 (68 MJ) for the secondary supply does not need to consider fire propagation since it is less than 101 MJ.

G.1.4 Impact of ERFBS

The example is repeated assuming the lowest tray is protected by an electric raceway fire barrier system (ERFBS) or fire wrap. Recall from the sections above (with the first cable tray located 3 feet above the switchgear):

- NUREG/CR-6850 Appendix M: First tray within the vertical ZOI of the energetic phase (5 feet).
    - ERFBS treatment in NUREG/CR-6850 assumes if the cable tray is protected it is assumed damaged, but not ignited.
    - For the post-HEAF ensuing fire, the first cable tray ignites dur to the ensuing fire and eventually propagates to the third tray in the cable tray stack.
- Screening: First tray within the vertical energetic ZOI (3.5 feet).
    - ERFBS neither damaged nor ignited. No PRA targets damaged (ensuing fire does not reach second cable tray)
- Zone 1 configuration specific: First tray is outside the vertical energetic ZOI of 1.5 feet for the normal supply section and 1 feet for the secondary supply section.
    - ERFBS neither damaged nor ignited. No PRA targets damaged (ensuing fire does not reach second cable tray).

G.1.5 NUREG/CR-6850 Example Summary

Table 0-2 compares the differences in the results for the various methods reviewed in Example 1.

Table 0-2
Summary of NUREG/CR-6850 Comparison Example

Example Case	Results and Discussion
NUREG/CR-6850	First target: Within energetic ZOI. Damaged and ignited at time 0. Second target: Outside the energetic HEAF ZOI. Ensuing fire propagates to this tray in 7 minutes.
Screening Approach	First target: Within energetic ZOI. Damaged at time 0 but does not ignite. The tray is subject to direct flame impingement from the ensuing fire and ignites within 1 minute. Second target: Outside the energetic ZOI. Ensuing fire propagates to this tray in 8 minutes.
Zone 1 Configuration Specific	First target: Outside the energetic ZOI for a supply breaker limited fault and a fault in the main bus bar or load breaker with a stuck breaker. The first tray is subject to direct flame impingement from the ensuing fire and ignites within 1 minute. Second target: Outside the energetic ZOI. Ensuing fire propagates to this tray in 8 minutes. Even though first target tray is outside the HEAF energetic phase ZOI following the Zone 1 configuration specific ZOI, the impact of the ensuing fire results in the target trays damaged and ignite in time similar to NUREG/CR-6850 and screening methods.
NUREG/CR-6850 (with ERFBS)	First target: Within energetic ZOI. Damaged at time 0 but does not ignite. The tray is subject to direct flame impingement from the ensuing fire and ignites within 1 minute. Second target: Outside the energetic ZOI. Ensuing fire propagates to this tray in 8 minutes.
Screening (with ERFBS)	First target: Within energetic ZOI but not damaged and not ignited (protected by ERFBS). Target is not damaged and does not ignite. Second target: Outside the energetic ZOI. Target is not damaged since the fire does not propagate from the lowest tray.
Zone 1 Configuration Specific (with ERFBS)	First target: Outside the energetic ZOI for a supply breaker limited fault and a fault in the main bus bar or load breaker with a stuck breaker. The ERFBS is not impaired by the HEAF and protects the first tray from damage and ignition. Second target: Outside the energetic ZOI. Not damaged since the fire does not propagate from the lowest tray.

G.2 Example 2, Zone 2 MV Switchgear

In this example, scenarios for a MV switchgear located in Zone 2 are developed. For this example, the following are defined:

- The MV switchgear is located in Zone 2 (See Section 3.1)
- There are 7 switchgear banks in Zone 2
    - A split fraction of 0.14 is used to apportion the Bin 16.b generic fire ignition frequency for the Zone 2 switchgear (See Section 5.2.2)
- The normal supply for the switchgear is the UAT
    - The fault clearing time is 2.8 seconds
- The secondary supply for the switchgear is the SAT
    - The fault clearing time is 4.5 seconds (taken from example in Section 6.4.1)
- The upstream Zone 1 switchgear supply breaker FCT is 0.76 seconds (taken from example in Section 6.4.2)
- The targets are subject to thermoset damage criteria
- There are three targets (see Figure G-11)
    - Conduit A is located 3 feet from the normal supply breaker vertical section
    - Conduit B is located 3 feet behind the secondary supply breaker vertical section
    - Conduit C is located 3 feet from the side of the end load vertical section

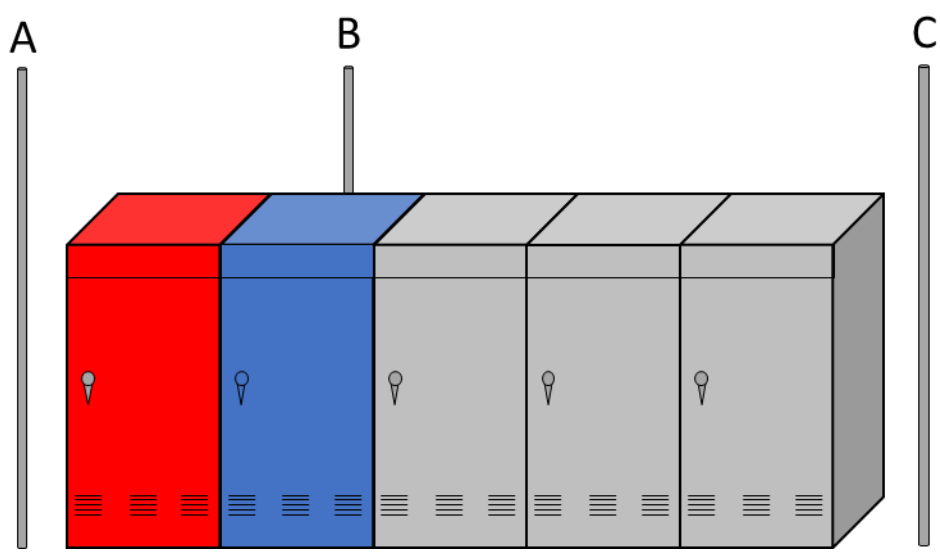

Figure G-4
Example 2 Switchgear Bank, Normal Supply in Red, Secondary Supply in Blue, Conduits A, B, and C

G.2.1 NUREG/CR-6850 Methodology

The horizontal ZOI for a HEAF is 3 feet from the front or rear panel doors. Therefore, conduits A and C are outside the HEAF ZOI. Conduit B is within 3 ft of the rear panel door ZOI and is damaged by the energetic HEAF ZOI.

G.2.2 Screening Approach

Following the screening approach in Section 8.4, the energetic phase of the HEAF ZOI for the UAT (normal supply) with a FCT of 2.8 seconds is 3 feet (see

Table 8-2) for thermoset targets. In screening, each target conduit is within the energetic ZOI.

As discussed in Section 5.2.2, 14% of the generic fire ignition frequency for medium voltage switchgear (1.98E-3) is apportioned to the total population of switchgear in Zone 2. The ignition source weighting factor is determined using the switchgear in Zone 2 (1 out of 7). The ignition frequency for the scenario is:

$$(\lambda_{16.b}) \cdot W_{is} \rightarrow (\lambda_{16.b} \cdot 0.14) \cdot \left(\frac{1}{7}\right) = 3.96E - 05$$

G.2.3 Zone 2, Refinement Level 1

In refinement level 1 (Section 8.6.1) , two scenarios are developed (see Figure 11-12). The ignition frequency for each scenario is split between the supply sections and supply breaker limited fault as shown in Figure 8-7 (shown below as Figure 11-12).

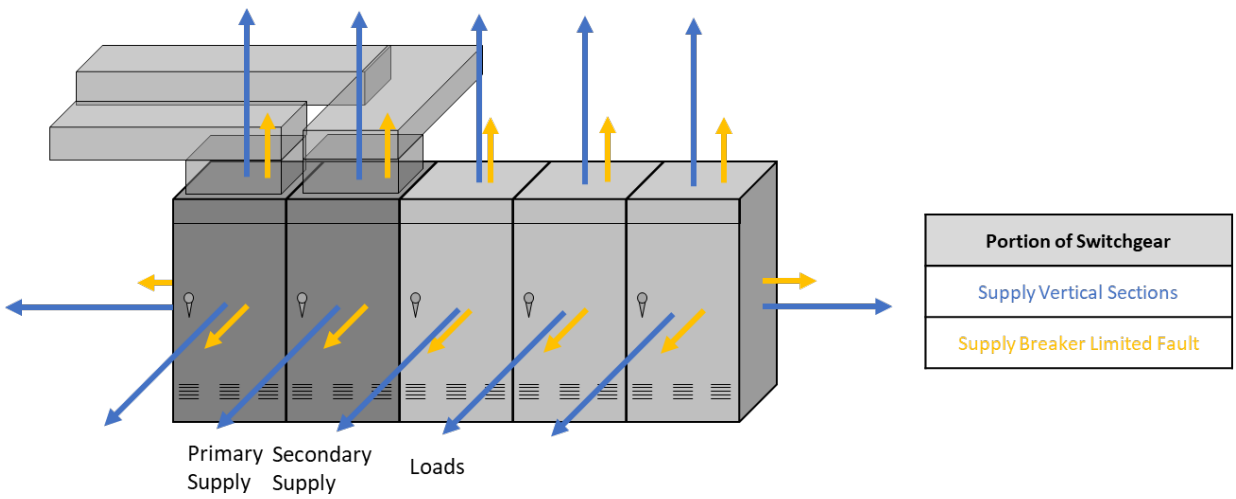

Figure G-5
Zone 2 MV Switchgear Refinement Level 1 ZOIs

The resulting scenario ignition frequencies are calculated as:

- Fault in load breaker or main bus bar (MBB) with the bus supply breaker interrupting: $(\lambda_{16.b} \cdot 0.14 \cdot W_{is}) \cdot 0.94 = (3.96E - 05) \cdot 0.94 = 3.72E - 05$
- Fault in normal or secondary supply with upstream breaker failure: $(\lambda_{16.b} \cdot 0.14 \cdot W_{is}) \cdot 0.06 = (3.96E - 05) \cdot 0.06 = 2.38E - 06$
    - The bounding end state of the normal supply fed from the UAT is selected.

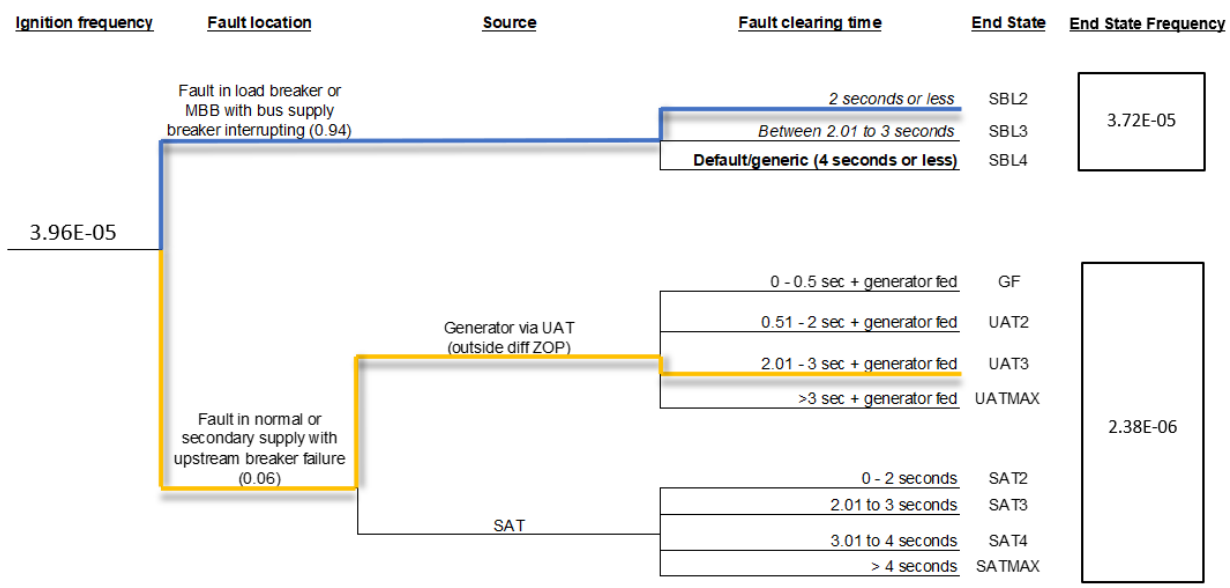

Figure G-6
Example 2, Zone 2 Refinement Level 1 HEAF Event Tree

Table 8-6 lists the 30 MJ/m^2 fragilities (including thermoset cables). The ZOI for a fault in load breaker or MBB with the bus supply circuit breaker interrupting ZOI is 1 foot in the back direction and 0.5 feet in the side direction (end state SBL2). For both ZOIs, the target conduits, located 3 feet from the switchgear, are outside the energetic ZOI.

A fault in either normal or secondary supply with upstream breaker failure for this switchgear results in a ZOI of 2.5 feet to the side and 3 feet in the back direction (end state UAT3). Only conduit B is within the energetic phase of the ZOI. With an arc energy of 233 MJ, fire to adjacent vertical sections is postulated along with the ensuing fire. Depending on the specific parameters selected (radiative fraction, fire diameter, etc.) the target conduits likely remain outside the ensuing fire ZOI of one, two, or three switchgear vertical sections.

G.2.4 Zone 2, Refinement Level 2

In refinement level 2 (Section 8.6.2), the scenario ignition frequency can be further analyzed. Figure 8-11 (shown below as Figure 11-14) shows six scenarios developed. The ignition frequency for each scenario is split between the supply sections and supply breaker limited fault in **Error! Reference source not found.** (shown below as Figure 11-15).

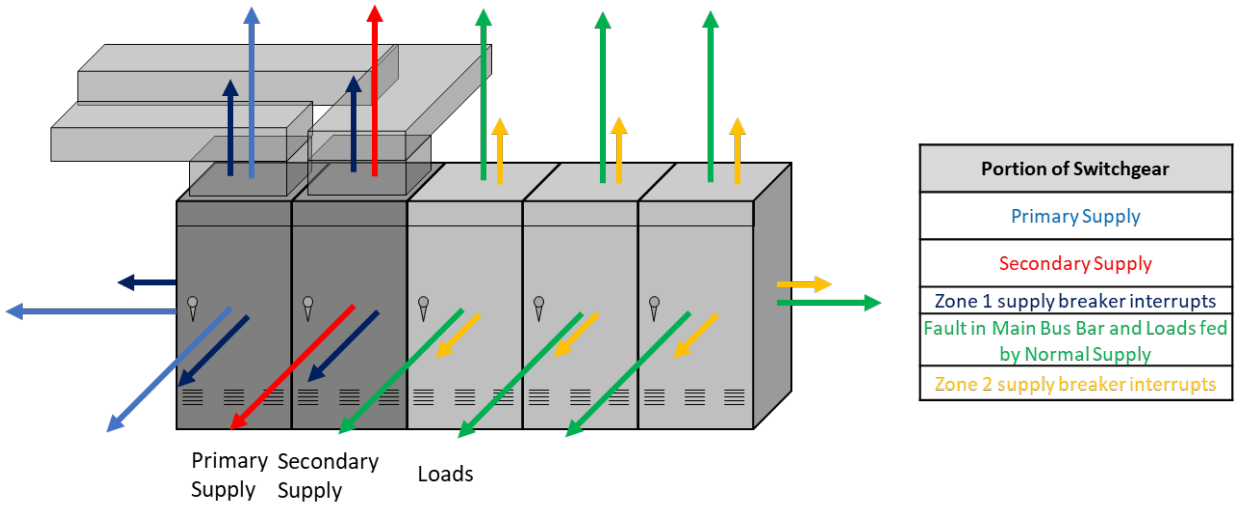

Figure G-7
Zone 2 MV Switchgear Refinement Level 2 ZOIs

The resulting scenario ignition frequencies are calculated as:

- Normal (primary) supply: $(\lambda_{16.b} \cdot 0.14 \cdot W_{is}) \cdot (0.54 \cdot 0.05) = (3.96E-05) \cdot 0.03 = 1.07E-06$
- Zone 1 supply breaker limited (normal supply): $(\lambda_{16.b} \cdot 0.14 \cdot W_{is}) \cdot (0.54 \cdot 0.95) = (3.96E-05) \cdot 0.51 = 2.03E-05$
- Secondary supply: $(\lambda_{16.b} \cdot 0.14 \cdot W_{is}) \cdot (0.32 \cdot 0.05) = (3.96E-05) \cdot 0.02 = 6.34E-07$
- Zone 1 supply breaker limited (secondary supply): $(\lambda_{16.b} \cdot 0.14 \cdot W_{is}) \cdot (0.32 \cdot 0.95) =\cdot (3.96E-05) \cdot 0.3 = 1.20E-05$
- Loads, fed by UAT: $(\lambda_{16.b} \cdot 0.14 \cdot W_{is}) \cdot (0.14 \cdot 0.05) = (3.96E-05) \cdot 0.01 = 2.77E-07$
- Loads, Zone 2 supply breaker interrupts: $(\lambda_{16.b} \cdot 0.14 \cdot W_{is}) \cdot (0.14 \cdot 0.95) = (3.96E-05) \cdot 0.13 = 5.27E-06$

Table 8-6 lists the energetic ZOIs for the 30 MJ/m^2 fragility (including thermoset cables). The energetic ZOIs for each scenario are:

- Normal (primary) supply: 2.5 feet to the side (end state UAT3), conduit A is outside the HEAF ZOI
- Zone 1 supply breaker limited (normal supply): 0.5 feet to the side (end state SBL2), conduit A is outside the HEAF ZOI
- Secondary supply: 2.5 feet to the rear (end state SATMAX), conduit B is outside the HEAF ZOI
- Zone 1 supply breaker limited (secondary supply): 1 foot to the rear (SBL2), conduit B is outside the HEAF ZOI
- Loads, fed by UAT: 2.5 feet to the side (end state UAT3), conduit C is outside the HEAF ZOI

- Loads, Zone 2 supply breaker interrupts: 0.5 feet to the side (end state SBL2), conduit C is outside the HEAF ZOI

The arc energy for end state UAT3 on for the normal supply/load and SATMAX on the secondary supply exceeds 101 MJ and the scenario progression must consider fire propagation to the secondary supply vertical section. The remaining end states do not have sufficient energy and the HRR is limited to 170 kW (for the ignition source excluding secondary combustible propagation). Based on a radiant heat flux calculation, the conduits are outside the ensuing fire ZOI.

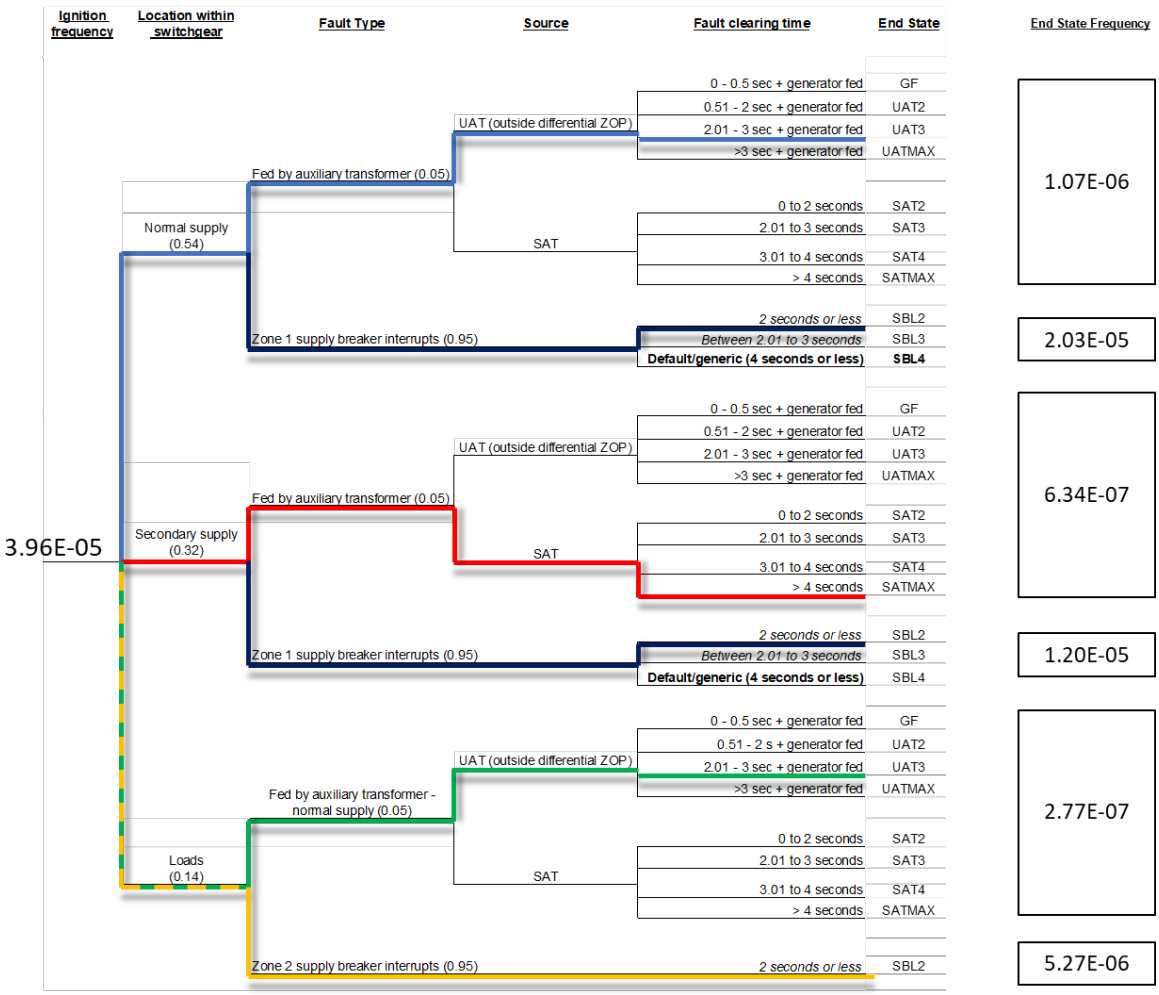

Figure G-8
Example 2, Zone 2 Refinement Level 2 HEAF Event Tree

G.2.5 Example 2 Summary

Table 0-3 compares the differences in the results for Example 2.

Table 0-3
Summary of Horizontal Target Comparison Examples

Example Case	Results and Discussion
NUREG/CR-6850	Conduit A, located to the side of the switchgear is outside the HEAF ZOI and is not damaged. Conduit B is located behind the switchgear at a distance of 3 feet. It is within the HEAF ZOI and is damaged by the energetic phase. Conduit C, located to the side of the switchgear is outside the HEAF ZOI and is not damaged. The ensuing fire involves multiple vertical sections. At a horizontal distance of 3 feet the conduits are likely outside the post-HEAF ensuing fire ZOI.
Screening	Conduit A, located to the side of the switchgear at a distance of 3 feet. It is within the energetic ZOI and is damaged. Conduit B is located behind the switchgear at a distance of 3 feet. It is within the energetic ZOI and is damaged. Conduit C, located to the side of the switchgear at a distance of 3 feet is within the energetic ZOI and is damaged. The ensuing fire may involve 2 to 3 vertical sections. At a distance of 3 feet the conduits are likely outside the post-HEAF ensuing fire horizontal ZOI.
Refinement Level 1	Only Conduit B is within the energetic phase with a scenario frequency of 2.38E-06. The normal or secondary supply with upstream breaker failure scenario has an arc energy sufficient to propagate fire to adjacent vertical sections. At a distance of 3 feet the conduits are likely outside the post-HEAF ensuing fire horizontal ZOI.
Refinement Level 2	All targets are outside the energetic HEAF ZOI. The arc energy for the generator fed scenario on the normal supply section has an arc energy sufficient to propagate fire to adjacent vertical sections. At a distance of 3 feet the conduits are likely outside the post-HEAF ensuing fire horizontal ZOI.

G.3 Example 3, Multiple Supplies

G.3.1 Medium Voltage Switchgear

In this example, the MV switchgear bank has three supplies. This example shows how to apportion the scenario ignition frequencies for a switchgear with three supplies (see Figure 11-16). The following information is provided for the MV switchgear:

- The switchgear is in Zone 1
- There are 4 Zone 1 switchgear (banks)
- The normal supply for the switchgear is the UAT
    - The fault clearing time is 3.5 seconds
- There are two off-site power sources, each supporting a different SAT
- There is no generator circuit breaker

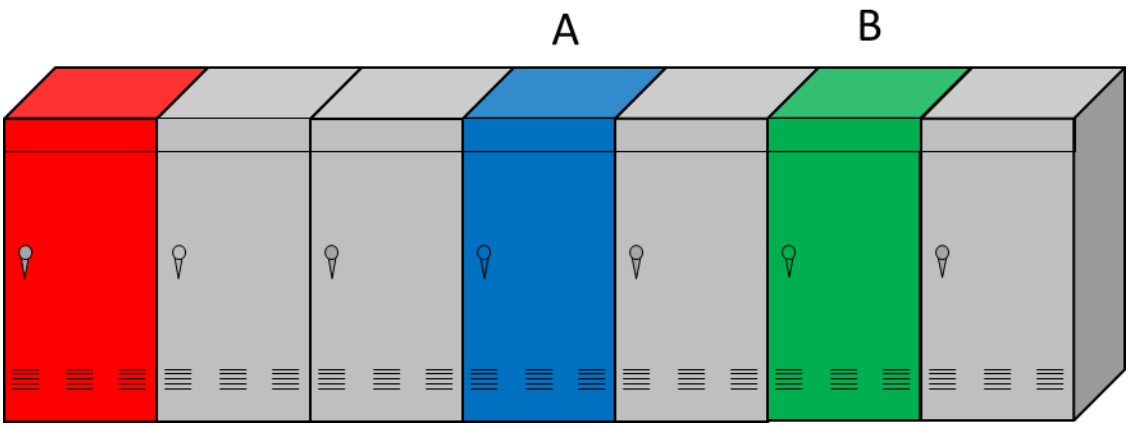

Figure G-9
Example 3, Switchgear Bank, Normal Supply in Red, A Secondary Supply in Blue, B Secondary Supply in Green

The Zone 1 configuration specific scenario ignition frequencies for this scenario are:

- Normal (primary) supply: $(\lambda_{16.b} \cdot 0.86 \cdot W_{is}) \cdot 0.57 = \left(1.98E-03 \cdot 0.86 \cdot (1/4)\right) \cdot 0.57 = 2.43E-04$
- Secondary supply A: $(\lambda_{16.b} \cdot 0.86 \cdot W_{is}) \cdot 0.28/2 = \left(1.98E-03 \cdot 0.86 \cdot \left(\frac{1}{4}\right)\right) \cdot 0.28/2 = 5.96E-05$
- Secondary supply B: $(\lambda_{16.b} \cdot 0.86 \cdot W_{is}) \cdot 0.28/2 = \left(1.98E-03 \cdot 0.86 \cdot \left(\frac{1}{4}\right)\right) \cdot 0.28/2 = 5.96E-05$
- Fault in load breaker of MBB fed via “stuck” normal supply breaker: $(\lambda_{16.b} \cdot 0.86 \cdot W_{is}) \cdot 0.01 = \left(1.98E-03 \cdot 0.86 \cdot \left(\frac{1}{4}\right)\right) \cdot 0.01 = 4.26E-06$
- Fault in load breaker or MBB with bus supply breaker interrupting: $(\lambda_{16.b} \cdot 0.86 \cdot W_{is}) \cdot 0.14 = \left(1.98E-03 \cdot 0.86 \cdot \left(\frac{1}{4}\right)\right) \cdot 0.14 = 5.96E-05$

For the two secondary supplies, the frequency is apportioned equally between the two secondary supply sections. The development of the scenario (energetic ZOIs + ensuing fire) continues as shown in the previous examples.

G.3.2 Load Center

In this example, the scenario frequencies for two load centers connected by a cross-tie are examined to determine the frequency of 16.a HEAFs for the ignition source in Figure 11-17. The following information is provided:

- The sources are two load centers, LC-1 and LC-2
  - LC-1 consists of sections A, B, and C. There is a supply breaker in Section A.
  - LC-2 consists of sections E, F, and G. There is a supply breaker in Section E.
  - Section D is a cross-tie connecting the two load centers that is administratively open during normal operation
- There are a total of 8 load center supply breakers in the plant

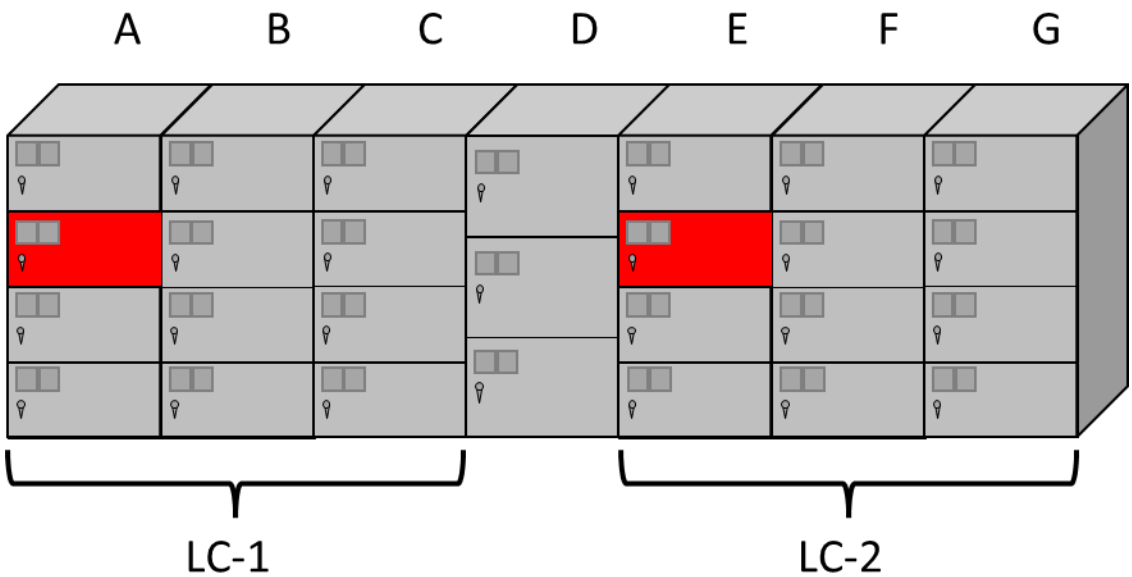

Figure G-10
Example 3, Load Centers LC-1 and LC-2, Supply Breakers in Red

- LC-1 supply breaker in section A: $(\lambda_{16.a} \cdot W_{is}) = \left(5.32E-04 \cdot (1/8)\right) = 6.65E-05$
- LC-2 supply breaker in section E: $(\lambda_{16.a} \cdot W_{is}) = \left(5.32E-04 \cdot (1/8)\right) = 6.65E-05$

Either load center could be supplied by the other through the cross-tie in section D. The cross-tie in Section D is not counted as a HEAF source since it is normally open and does not function as a supply during normal operations. LC-1 and LC-2 each have a count of 1 (single supply breaker) for bin 16.a.

1

G.4 Example 4, Target Equipment Fragility

In this example, the scenarios from the refinement level 2 case in Example 2 (Section G.2.4) are used to determine if a PRA target (switchgear) is within the energetic phase of the HEAF ZOI. From Section G.2.4, the end states for this example are:

- Normal (primary) supply: UAT3
- Zone 1 supply breaker limited (normal supply): SBL2
- Secondary supply: SATMAX
- Zone 1 supply breaker limited (secondary supply): SBL2
- Loads, fed by normal supply: UAT3
- Loads, Zone 2 supply breaker interrupts: SBL2

Additional information for this example includes:

- A switchgear (PRA target) is located 4 feet behind the ignition source switchgear
- The switchgear has open parquet vents (see Figure 11-65) in the line of sight of the HEAF.

Using Table 8-5, as the open ventilation result in failure criteria of 15 MJ/m^2, the back energetic dimensions and target switchgear damage is characterized:

- Normal (primary) supply: UAT3 = 4 feet back direction (switchgear within energetic phase and damaged)
- Zone 1 supply breaker limited (normal supply): SBL2 = 2 feet back direction (switchgear outside the energetic phase)
- Secondary supply: SATMAX = 3.5 feet back direction (switchgear outside the energetic phase)
- Zone 1 supply breaker limited (secondary supply): SBL2 = 2 feet back direction (switchgear outside the energetic phase)
- Loads, fed by auxiliary transformer normal supply: UAT3 = 4 feet back direction (switchgear within the energetic phase and damaged)
- Loads, Zone 2 supply breaker interrupts: SBL2 = 2 feet back direction (switchgear outside the energetic phase)

G.5 Example 5, Non-Segregated Bus Ducts

For this NSBD example, the following inputs are used:

- The source is a run of NSBD located in Zone BD1 between two MV switchgear as shown in Figure 11-18
- There is 50 total transition points in Bin 16.1-2
- This section of bus duct is powered from the SAT with a FCT of 1.6 seconds
- The bus duct has an aluminum enclosure with a width of 3 feet and a height of 2 feet
- The targets are subject to thermoplastic damage criteria
- There are two targets
    - A cable tray above the bus duct at transition point A, approximately 2 feet above the duct enclosure
        - There are no covers on the tray
    - An electrical cabinet is located below the run between the two switchgear
        - The top of the cabinet is located approximately 10 feet below the bottom of the duct enclosure
        - The top of the cabinet is largely open
        - The electrical cabinet is located approximately 15 feet from transition point B and approximately 30 feet from transition point A
- There is a ventilation opening on the side of the bus duct at the section that crosses the electrical cabinet

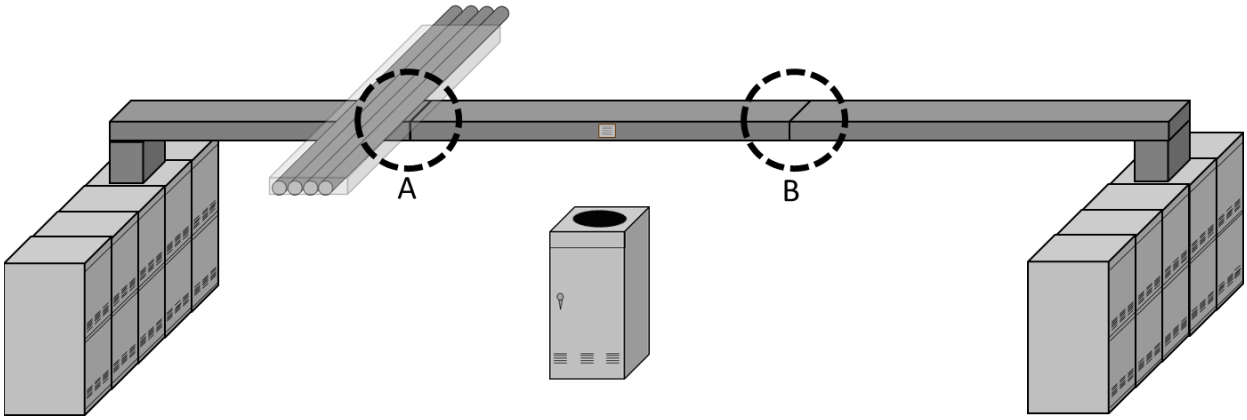

Figure G-11
Example 5 NSBD with Known Transition Points (not to scale)

G.5.1 Supplement 1 to NUREG/CR-6850

From NUREG/CR-6850 Supplement 1 guidance, neither the target cable tray nor the electrical cabinet are within the ZOI of a bus duct HEAF along the bus duct length or within the circular cone below the bus duct. The bus duct HEAF has a ZOI along the length of bus duct of 1.5 feet from the fault point. Assuming the fault is located at the center of the bus duct cross sectional area, the ZOI only reaches 0.5 feet above the top of the bus duct housing (as shown in Figure 11-19). Therefore, the tray located 2 feet from the bus duct, is outside the ZOI.

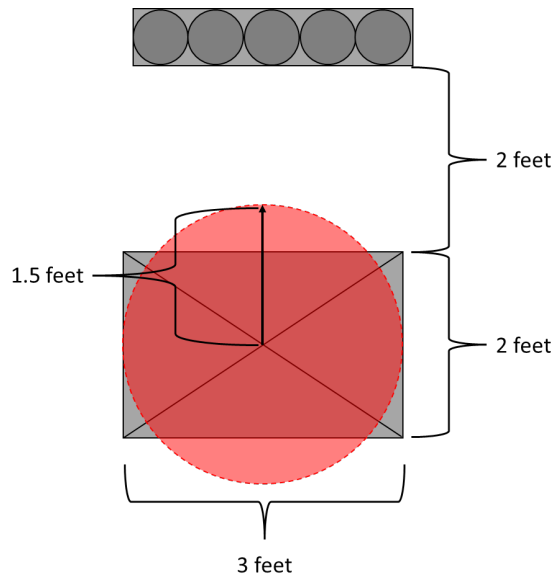

Figure G-12
Example 5, NSBD ZOI (red) from Supplement 1 to NUREG/CR-6850 and Scenario Target Cable Tray

G.5.2 BD1 HEAF, Known Transition Points

Per Sections 9.3 and 9.3.4, up to two scenarios can be developed for bus ducts in Zone BD1. These scenarios capture the potential outcomes of:

- A HEAF fed directly from the power transformer (5% of ignition frequency)
- Supply breaker limited HEAF (95% of ignition frequency)

The resulting scenario ignition frequencies for this transition point is:

- Power transformer: $(\lambda_{16.1-2} \cdot W_{is})\ 0.05 = \left(8.98E-04 \cdot (1/50)\right) \cdot 0.05 = 8.98E-07$
- Supply breaker limited: $(\lambda_{16.1-2} \cdot W_{is})\ 0.95 = \left(8.98E-04 \cdot (1/50)\right) \cdot 0.95 = 1.71E-05$

The analyst may select the bounding scenario without using the 5/95 split fraction.

With a SAT FCT of 1.6 seconds, the scenario ZOIs are developed using SAT2 (for the power transformer) and BDSBL4 (for supply breaker limited) end states as shown in Figure 11-20.

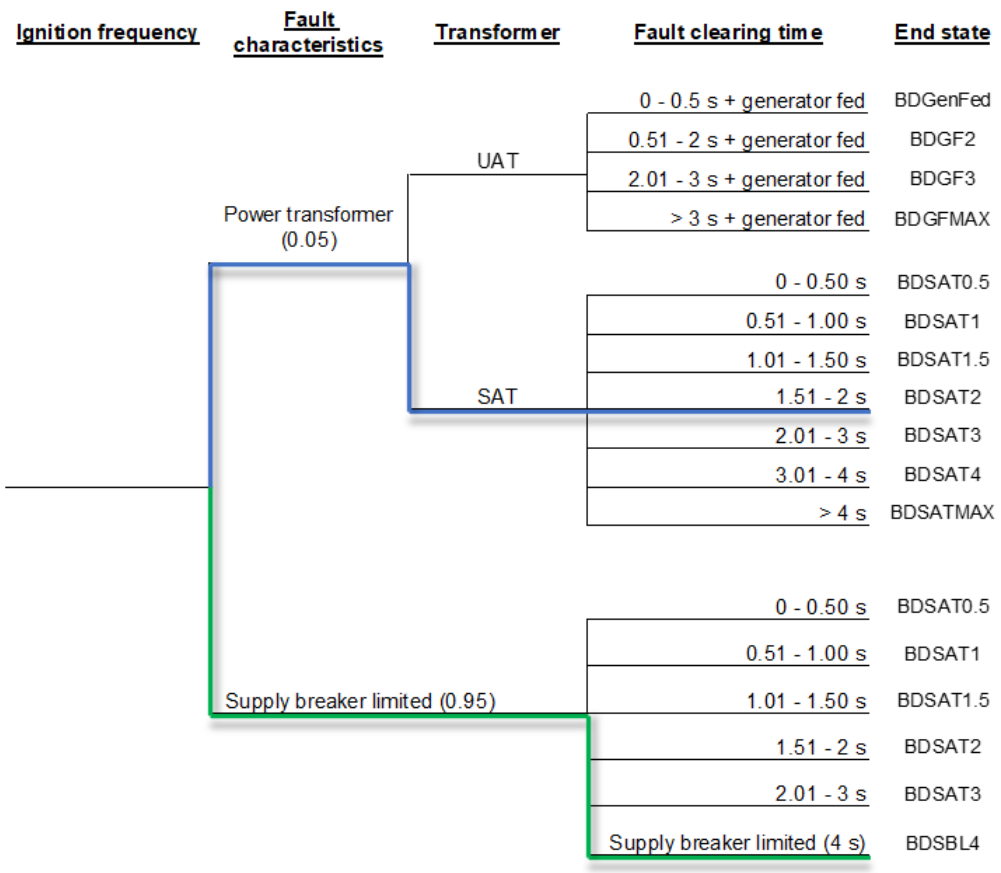

Figure G-13
Zone BD1 HEAF ZOI Event Tree

For transition point A the target cable tray is located 2 foot above the bus duct. Per

Table 9-2 the ZOIs for the two scenarios are:

- Power transformer: 1.5 feet (end state BDSAT2)
- Supply breaker limited: 3 feet (end state BDSBL4)

For BDSAT2, the cable tray is not within the energetic ZOI along the bus duct or the waterfall component below the bus duct (see Figure 11-21). For BDSBL4, the cable tray is within the energetic ZOI. If more detail is necessary, the analyst may elect to determine the fault clearing time of the Zone 1 MV switchgear bus supply circuit breaker. To be selectively coordinated with the upstream transformer protection the Zone 1 bus supply circuit breaker should interrupt before the time overcurrent protection for the auxiliary power transformer.

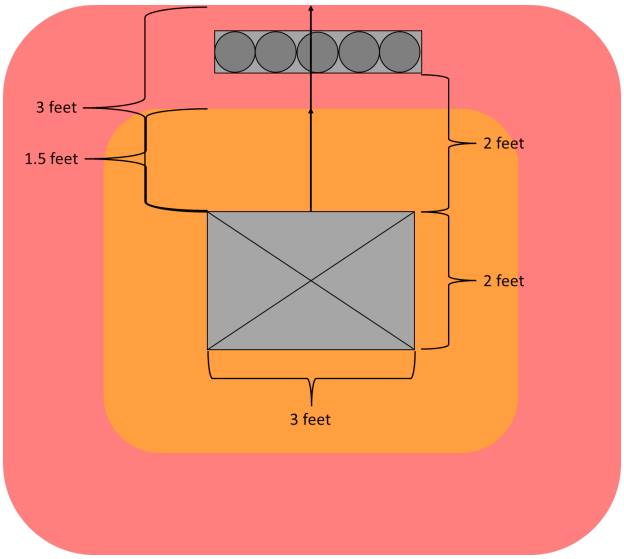

Figure G-14
NSBD End Etate BDSAT2 Energetic Phase Along the Bus Duct ZOI (orange), BDSBL4 Energetic Phase along the bus duct (red) with respect to Cable Tray

For transition point B, there are no targets within the ZOI. However, the electrical cabinet target is located below a ventilation opening. As noted in Section 5.2.3, given the propensity for degradation to occur at such locations, PRA targets within the ZOI of these locations should be included with scenarios of the closest transition point. While the cabinet is outside ZOI along the bus duct run, since the top of the cabinet is open, it is within the waterfall ZOI. This cabinet is included as a target for transition point B.

G.5.3 BD1 HEAF, Unknown Transition Points

Consider the same example, however the transition points are not known. The frequency following a per linear foot approach assumes 600 feet of Bin 16.1-2 bus duct. Scenarios – A for the cable tray and B for the electrical cabinet - are developed in Figure 11-22.

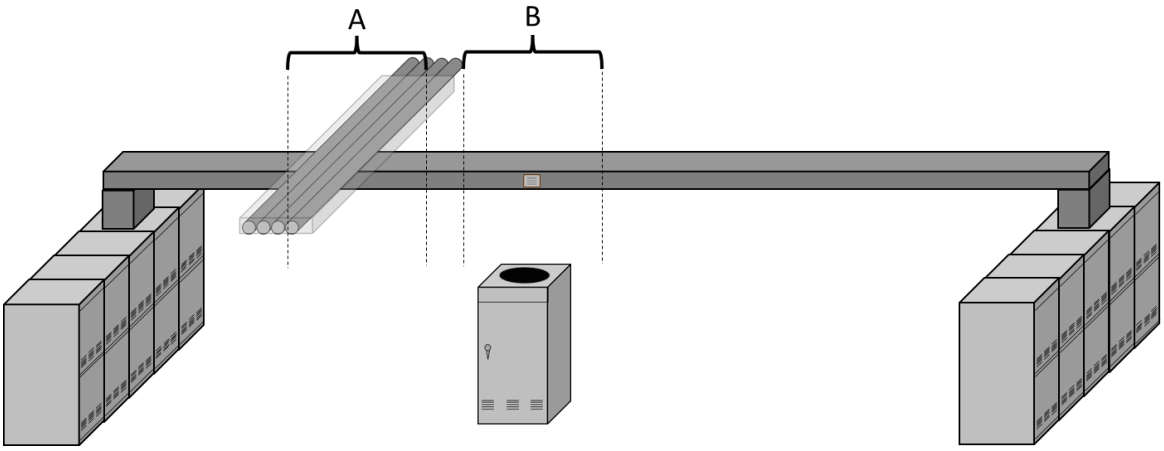

Figure G-15
Example 5 NSBD with Unknown Transition Points (not to scale)

When the linear foot approach is used (see Section 5.2.3), a minimum of 12 feet should be assumed. The frequency for either scenario A or B are determined using the same apportioning as the example above, however the ignition source weighting factor is now calculated as 12 feet out of the total 600 feet for bin 16.1-2. The resulting scenario ignition frequencies are:

- Power transformer: $(\lambda_{16.1-2} \cdot W_{is})\ 0.05 \rightarrow \left(8.98E-04 \cdot (12/600)\right) \cdot 0.05 = 8.98E-07$
- Supply breaker limited: $(\lambda_{16.1-2} \cdot W_{is})\ 0.95 \rightarrow \left(8.98E-04 \cdot (12/600)\right) \cdot 0.95 = 1.71E-05$

Note the example is purposely developed to ensure the number of NSBD transition points and linear feet are equivalent and result in the same apportioned frequencies. The goal is to highlight the different approaches for calculating the ignition source weighting factor not to suggest a preferred approach. The frequencies can, and usually will, be different for the two approaches. Therefore, the analyst may desire to explore both approaches and select the method that minimizes the scenario frequency.

NRC FORM 335
(12-2010)
NRCMD 3.7

U.S. NUCLEAR REGULATORY COMMISSION

BIBLIOGRAPHIC DATA SHEET

(See instructions on the reverse)

1. REPORT NUMBER
(Assigned by NRC, Add Vol., Supp., Rev., and Addendum Numbers, if any.)

NUREG-2262

2. TITLE AND SUBTITLE
High Energy Arcing Fault Frequency and Consequence Modeling, Draft Report for Public Comment

3. DATE REPORT PUBLISHED

MONTH	YEAR
July	2022

4. FIN OR GRANT NUMBER

5. AUTHOR(S)
N. Melly, NRC Office of Nuclear Regulatory Research
A. Lindeman, M. Randelovic, Electric Power Research Institute

6. TYPE OF REPORT
Technical

7. PERIOD COVERED (Inclusive Dates)

8. PERFORMING ORGANIZATION - NAME AND ADDRESS (If NRC, provide Division, Office or Region, U. S. Nuclear Regulatory Commission, and mailing address; if contractor, provide name and mailing address.)

Division of Risk Analysis
Office of Nuclear Regulatory Research
U.S. Nuclear Regulatory Commission
Washington, DC 20555-0001

Electric Power Research
Institute Palo Alto, CA
94304-1338

9. SPONSORING ORGANIZATION - NAME AND ADDRESS (If NRC, type "Same as above", if contractor, provide NRC Division, Office or Region, U. S. Nuclear Regulatory Commission, and mailing address.)

Division of Risk Assessment
Office of Nuclear Reactor Regulation
U.S. Nuclear Regulatory Commission
Washington, DC 20555-0001

10. SUPPLEMENTARY NOTES
N. Melly, NRC Project Manager

11. ABSTRACT (200 words or less)

NUREG/CR-6850 and NUREG/CR-6850 Supplement 1 provide the basic methods to analyze the risk associated with HEAFs in power distribution equipment (switchgear and load centers) and bus ducts (including iso-phase bus ducts), respectively. Since the publication of these two reports, the state of knowledge of the HEAF phenomena has advanced significantly. A thorough understanding of the nuclear power plant electrical distribution system and its performance during faulted conditions along with a review and categorization of industry events has occurred. Additionally, experimentation – including full scale testing on HEAF-susceptible equipment, small scale testing, and hazard estimation have increased the understanding of parameters that affect the dimensions of the zone of influence (ZOI). This report documents a joint effort to combine previous HEAF-related research, methods, and data to improve realism in calculating plant risk due to HEAFs. Ignition frequency and non-suppression estimates are updated with the most recently available industry operating experience. The ZOI configurations are expanded. Previous guidance postulated one ZOI for each category of equipment (switchgear and load centers, bus ducts, and iso-phase bus ducts). The development and use of HEAF hazard estimation tools allowed for the expansion of ZOI configurations by using scenario specific parameters such as fault current magnitude, arc voltage, duration, location, electrode composition, and type of equipment, to more accurately predict the ZOI. The ZOIs results are grouped by the working group to determine consensus ZOIs for the three classes of equipment with varying levels of detail commensurate with potential risk significance.

12. KEY WORDS/DESCRIPTORS (List words or phrases that will assist researchers in locating the report.)
Fire Protection
Fire Probabilistic Risk Assessment
Arc Fault
Arc Flash
High Energy Arcing Fault
NFPA 805

13. AVAILABILITY STATEMENT
unlimited

14. SECURITY CLASSIFICATION
(This Page)
unclassified
(This Report)
unclassified

15. NUMBER OF PAGES
330

16. PRICE

UNITED STATES
NUCLEAR REGULATORY COMMISSION
WASHINGTON, DC 20555-0001

OFFICIAL BUSINESS

@NRCgov